Architectural and Structural Operation & Maintenance Manual

for the Iqaluit Wastewater Treatment Plant

Iqaluit, Nunavut

Expected Year of Completion: 2020

Original Scope: Design and upgrade existing Wastewater Treatment Plant to meet current and future demands.

This manual has been updated to include:

Date	Description of Change
2019-Mar-01	First Draft – Primary treatment
2019-Dec 6	Second Draft – Primary Treatment, Secondary Treatment and Solids Handling.
2020-Apr-24	Final Compiled Manual

CHAPTER 1

TABLE OF CONTENTS

1. INTRODUCTION 1
1.1 USE OF THE MANUAL 1
1.2 PROJECT TEAM 1

CHAPTER 1

INTRODUCTION

USE OF THE MANUAL

The discussion in this document includes the background and design data for the Architectural and structural systems included in the Iqaluit Wastewater Treatment Plant only. Refer to the Electrical & Instrumentation, Building Mechanical and Process Operation and Maintenance Manuals for information on those systems.

PROJECT TEAM

Project Owner:	**City of Iqaluit** Building 901, PO Box 460, Iqaluit, NU X0A 0H0 Matthew Hamp Project Manager
Project Management:	**City of Iqaluit** Building 901, PO Box 460, Iqaluit, NU X0A 0H0 Kyle Humphreys Project Manager
Consultant:	**Nunami Stantec Limited** 1880C Nobel House Iqaluit, NU X0A 0H0 Glenn Prosko Project Manager
Contractor:	**Kudik Construction Ltd** 1519 Federal Rd. Iqaluit, NU X0A 0H0 Sandra Rousseau Project Manager

CHAPTER 2

TABLE OF CONTENTS

2. INDEX

INTRODUCTION **1**
USE OF THE MANUAL 1
PROJECT TEAM 1

CHAPTER 2 ..... **1**

CHAPTER 3 ..... **1**

3. BACKGROUND AND DESIGN DATA **1**
3.1 GENERAL 1
3.2 BACKGROUND 1
3.3 NEW PROCESS DESCRIPTION, 2006 UPGRADE 1
3.4 BUILDING UPGRADE 2006 (GENERAL) 2
3.4.1 New Building Lower Floor 2
3.4.2 New Building Upper Floor 2
3.4.3 Lower Wall Construction 2
3.4.4 Upper Wall Construction 2
3.4.5 New Building Interior Wall Construction 2
3.4.6 New Building Roof Construction 2
3.4.7 New Electrical Room Construction 3
3.4.8 New Lab Room Construction 3
3.4.9 Doors and Stairs 3
3.5 2018 BUILDING UPGRADE 3
3.5.1 New Staircase Addition 3
3.5.2 Exterior Systems Description 5
3.5.3 New Roof above MBBR tank area 5
3.5.4 Doors and Frames 5
3.5.5 Interior Architectural Systems Description 5
3.5.6 Reconfiguration of MBBR Tanks – Structural 6
3.5.7 Reconfiguration of Structure between Grids B-D – Structural 6
3.5.8 Reconfiguration of Headworks – Structural 6

4. SCHEMATICS AND FUNCTIONAL DATA **1**
4.1 GENERAL 1

5. COMPONENT DETAILS **1**

6. OPERATING PROCEDURES **1**
6.1 GENERAL 1

7. MAINTENANCE PROCEDURES AND SERVICE INFORMATION 1
7.1 GENERAL 1
7.1.1 Keep It Clean 1
7.1.2 Keep It Tight 1
7.1.3 Renewal Parts 1
7.1.4 Parts and Equipment Ordering Procedure 2
7.1.5 Scheduled Preventive Maintenance Program 2
MAINTENANCE SCHEDULE 2
MAINTENANCE MANUALS 2
SPARE PARTS LIST 2

8. TESTING AND CERTIFICATION 1

9. CONTACT SERVICE INFORMATION 1

LIST OF APPENDICES

APPENDIX A – AS-BUILT DRAWINGS

APPENDIX B – APPROVED SHOP DRAWINGS

APPENDIX C – MAINTENANCE SCHEDULE

APPENDIX D – MAINTENANCE MANUALS

APPENDIX E – SPARE PART LIST

APPENDIX F – CONTACT SERVICE INFORMATION

APPENDIX G – WARRANTIES

CHAPTER 3

3. BACKGROUND AND DESIGN DATA

3.1 GENERAL

The discussion in this document includes the background and design data for the Architectural and structural systems included in the Iqaluit Wastewater Treatment Plant only. Refer to the Electrical & Instrumentation, Mechanical and Process Operation and Maintenance Manuals for information on those systems.

3.2 BACKGROUND

Earth Tech (Canada) Inc. (ET) was retained by the City of Iqaluit to undertake the design of improvements/upgrades to the Iqaluit WWTP and provide inspection services during the construction stage of the project.

Further information is provided in the following reports:

- "Structural Review of the Process Tanks at the Iqaluit Reclamation Facility" prepared by CH_2M Gore & Storrie.
- "Sewage Treatment Plant Investigation" prepared by Earth Tech (Canada) Inc.
- "Completion Study for the Iqaluit Wastewater" prepared by CH_2M Hill.

As part of this project, it is the City's intention to address the deficiencies and issues identified in these previous reports. Furthermore, it is the City's desire to convert the existing facility to a conventional activated sludge secondary treatment plant to meet the projected flows and loadings for a 20-year design horizon.

The objectives of the design team are to:

- Provide a complete operation system to meet the needs of the community and also to address the specific characteristics of its location;
- Provide a simple operational design with features suited to the community and avoid processes or equipment that require highly specialized technical skills or sophisticated maintenance procedures;
- Maximize the re-use and integration of salvageable components within the existing facility; and
- Minimize life cycle costs of the facility.

3.3 NEW PROCESS DESCRIPTION, 2006 UPGRADE

Phase 1 incorporates only the headworks ("preliminary treatment") of the new WWTP. The new headworks building houses the following components for Preliminary Treatment:

- New influent pumping;

- Relocate the existing screw screens;
- New fine screening equipment;
- New valves; and
- New PLC-based control.

3.4 BUILDING UPGRADE 2006 (GENERAL)

The new building has been constructed to the current building code, and to good northern engineering practices. The new building foundation is set on rock socket piles with lengths varying up to 7m long. The new building consists of an upper and lower level. There are also two new rooms in the existing building one is the electrical room and the new lab.

3.4.1 New Building Lower Floor

The lower floor consists of a concrete slab covering a bituminous damp proofing, 100mm Rigid insulation. The concrete slab is 150mm thick on top of a compacted fill.

3.4.2 New Building Upper Floor

The upper floor consists of 150mm thick concrete slab, with grating covering the channels and the hole to the sludge hopper.

3.4.3 Lower Wall Construction

The lower wall assembly consists of a concrete wall that supports the upper floor. On the exterior of the concrete wall is attached bituminous damp proofing, 100mm rigid insulation and finally cement board.

3.4.4 Upper Wall Construction

The upper wall assembly consists of a prefinished metal liner; notched Z bar sub grit, the cavity is filled with a semi rigid insulation, weather barrier and a prefinished metal siding.

3.4.5 New Building Interior Wall Construction

The interior wall has a 1-hour fire rating and is constructed of 15.9mm 'Densarmour' Densguard Fireguard, 91mm steel studs 400mm on center and 15.9mm 'Densarmour' Densguard Fireguard.

3.4.6 New Building Roof Construction

The new building roof assembly consists of a pre-finished metal liner, 12.7mm exterior grade Gypsum Wallboard, a thermal barrier, an air/vapour barrier, 2 layers of 100mm rigid insulation with Z-girts and finally prefinished sheet metal roofing.

3.4.7 New Electrical Room Construction

The three new electrical room wall assemblies are constructed of two types one with a 1-hour fire rating and is constructed of 15.9mm 'Densarmour' Densguard Fireguard, 38x89mm wood studs 400mm on center, 9.5mm plywood backing on the electrical room side and 15.9mm 'Densarmour' Densguard Fireguard, the other two new walls are fire rated for 1 hour and is constructed of 15.9mm 'Densarmour' Densguard Fireguard, 91mm steel studs 400mm on center and 15.9mm 'Densarmour' Densguard Fireguard.

3.4.8 New Lab Room Construction

The new Lab walls are constructed of three different types of assemblies. The one wall is common with the new electrical room which is fire rated for 1 hour and is constructed of 15.9mm 'Densarmour' Densguard Fireguard, 91mm steel studs 400mm on center and 15.9mm 'Densarmour' Densguard Fireguard, one of the other walls is common with the existing washroom and constructed of 12.7mm 'Densarmour' Densguard, 152mm steel studs 400mm on center and 12.7mm 'Densarmour' Densguard. The last wall is constructed of 12.7mm 'Densarmour' Densguard, 91mm steel studs 400mm on center and 12.7mm 'Densarmour' Densguard. The new Lab also has new cabinets for the storage of the laboratory equipment.

3.4.9 Doors and Stairs

The doors are fire rated in fire rated walls and regular doors in non-fire rated walls; there are two new overhead doors installed for access to the lower floor in the new headworks building and at the second floor for installation of equipment onto the second floor in Phase 2. The new stairs, required by code, are galvanized Z275 finish, for access from the lower headworks floor to the upper headworks floor and another from the upper headworks floor to the second floor in the existing building. It also provides exterior access to the second floor of the existing building.

3.5 2018 BUILDING UPGRADE

The existing two-story wastewater treatment facility in its 2017 configuration was lacking sufficient floor area to function effectively with the proposed new systems. A new stairwell at the South side of the building was necessary, for code compliance, and to provide adequate entry and egress from the Southwest corner of the second story of the facility. This addition now allows adequate access to this area of the facility without removing critical floor space that is required for the facility's operational equipment. At the exterior, the cladding was in a state of disrepair in various locations. All of the existing cladding is replaced to achieve a consistent finish of the entire building.

The Main Roof above the MBBR tanks was found in a state of disrepair with a leaking roof, missing vapour barrier, deteriorating roof insulation and overall poor performance. This roof was re-built in the spring of 2019. (for its assembly refer to 3.5.3 below)

3.5.1 New Staircase Addition

The new staircase has a footprint of approximately 4.5m x 5.5m in area. Its Entrance provides Access and Exiting, to and from the Main Floor area of the DAF tanks, Generator Room and Boiler Room and to a second Mechanical Room, located in the center of the Staircase. On the second floor the staircase is connected to the Polymer

System Area. The stair is constructed with steel stringers and concrete filled steel pans; the railing is Ø 42mm painted, steel tubing.

New Construction Assemblies for this Addition, as well as all areas, is as follows:

Exterior Wall EW1:

- 22mm Metal Cladding
- 22mm Horizontal 18 Gauge Hat Channels
- Spun Olefin Weather Barrier
- 25mm 18 Gauge Vertical Z-Bars connected to Fiberglass Clips
- 203mm Fiberglass Clips at 406mm horizontally and 914mm vertically
- 203mm Mineral Wool Insulation
- Self-Adhered Membrane Air / Vapour Barrier
- 16mm Type 'X' Exterior Grade GlassMat Gypsum Board c/w non-flammable Bituminous Adhesive Primer
- 203mm Heavy Gauge Wind Load-Bearing Steel Studs, Bracing and Spacing as per Structural
- 16mm Type 'X' Gypsum Board, painted

Exterior Wall EW2:

- 22mm Metal Cladding
- 18 Gauge Hat Channels
- Existing Concrete Forming System c/w 100mm Rigid Insulation and 200mm Concrete Wall

Exterior Wall EW3 (Infill):

- 22mm Metal Cladding
- 18 Gauge Hat Channels
- Spun Olefin Weather Barrier
- 100mm Rigid Insulation (to match existing)
- Self-Adhered Membrane Air / Vapour Barrier
- 16mm Type 'X' Exterior Grade GlassMat Gypsum Board c/w non-flammable Bituminous Adhesive Primer
- Steel Studs, Bracing and Spacing as per Structural
- 16mm Type 'X' Gypsum Board, painted

Interior Wall Staircase IW1 (FRR 1 HR):

- 2 layers 16mm Type 'X' Gypsum Board, Painted
- 203mm Steel Studs, Structural Steel, Bracing and Spacing as per Structural
- Existing Concrete Forming System c/w 100mm Rigid Insulation and 200mm Concrete Wall

Interior Wall Staircase IW2 (FRR 1 HR ULC W407 where applicable):

- 16mm Type 'X' Gypsum Board, Painted
- 152mm Steel Studs
- 16mm Type 'X' Gypsum Board, Painted

Staircase Floor F1:

- Sealed Concrete, Clear Finish
- Concrete Slab as per Structural
- 10mil Polyethylene Groundsheet
- Void Form as per Structural

- Ground Preparation as per Geotechnical Report

Staircase Roof R1:

- Metal Roofing to match Existing
- High Temperature Underlayment
- 150mm Z-Bars @ 610mm O.C.
- 150mm Semi-Rigid Mineral Fiber Insulation
- 150mm Semi-Rigid Mineral Fiber Insulation
- Self Adhered Modified Bitumen Air / Vapour Barrier
- 16mm Type 'X' Exterior Grade GlassMat Gypsum Board c/w non-flammable Bituminous Adhesive Primer
- 38mm Structural Q-Deck on Steel Beams as per Structural
- Structural Steel

Staircase Roof R2 (Fire Rated Mechanical Area):

- Same as R1
- Light Gauge Steel Framing, suspended from Q-Deck
- 2 Layers of 16mm Type 'X' Gypsum Board, Painted

The staircase addition structure consists of a combination of steel braced frame and moment frames. The frame is founded on reinforced concrete grade beams with a structural slab. The slab and grade beams are underlain with voidform and insulated with a perimeter apron of rigid insulation below grade. The foundation system are steel rock socketed piles.

3.5.2 Exterior Systems Description

All wall cladding was added where the existing Octaform (Insulated Concrete Forms) vinyl face was the exterior finish and the cladding was replaced in all other areas without an additional energy upgrade. Colours as per exterior elevations.

3.5.3 New Roof above MBBR tank area

During construction it was evident that a new Roof Assembly is required over the MBBR, DAF Tank Room and Generator areas, from Grid Line B to Grid Line F, and from Grid Line 2 to Grid Line 6 (refer to architectural drawings). This new Roof Assembly is similar to Staircase Roof R1 Assembly.

3.5.4 Doors and Frames

The metal doors and pressed steel frames are fire rated in fire rated walls and standard metal doors and frames in non-fire rated walls. Two new insulated, overhead metal doors are located and installed as per architectural drawings. Additionally, Fall Arrest Anchors are provided for these two (2) Over Head doors.

3.5.5 Interior Architectural Systems Description

Interior improvements include new railings, fixed ladder and painting as noted on the drawings. All railings, handrails and guards are Ø 42mm painted, steel tubing. The finish is

either painted or Z275 Galvanized, as noted on the architectural drawings. Typically, the 16mm Gypsum Wallboard is painted, color as per drawings.

3.5.6 Reconfiguration of MBBR Tanks – Structural

The area between grids D-F and grids 1-6 was reconfigured to suit the new layout of MBBR tanks and DAF units. This involved demolition of the existing tank walls on Grid Line 5 and between grids 4-5 on GL E. The upper level slab and partition wall along the electrical room were also demolished. An opening was established in the grid 6 exterior concrete wall to allow the new DAF units to be brought in.

Structural work in MBBR/DAF unit area involved the following;

- Addition of new reinforced concrete tank walls for the MBBR tanks, 400mm thick main tank wall and 250mm thick for the dividing wall.
- Existing sumps were infilled, and a new sump was established in the existing concrete floor slab.
- Steel HSS203x203x6.4 column was installed at Grid 5E to support the roof and new upper level floor.
- Upper floor between grids 5-6. Floor consists of 150mm thick concrete on 38mm metal deck on steel framing.
- Steel raised platform between DAF units
- Steel walkways and catwalks over MBBR tanks.
- Mechanical unit supports over MBBR tanks.

3.5.7 Reconfiguration of Structure between Grids B-D – Structural

The main structural items developed between Girds B-D were:

- Construction of a new steel frame mechanical mezzanine level. New mezzanine framing is supported on existing reinforced concrete walls.
- Infill of sections of floor with steel framing and concrete metal deck.
- Infill of sections of floor with checker plate and metal grating on steel framing.
- Reinforcement of floor around new floor openings in between grids 5-6.

3.5.8 Reconfiguration of Headworks – Structural

Reconfiguration of the headworks area involved the following items:

<u>Lower level:</u>

- Installation of a new sump and open floor drain detail.
- Widening of existing overhead door opening to accommodate new trailer.

<u>Upper level:</u>

- Steel frame support for new fine screen equipment.
- Installation of support details for overhead crane and belt filter equipment.
- Reinforcement of existing floor slab around new slab openings.
- Creating new openings in concrete floor trench walls.
- Installation of new platform and pipe supports in wetwell.
- Installation of new crane support in wetwell.

END OF CHAPTER 3

CHAPTER 4

4. SCHEMATICS AND FUNCTIONAL DATA

4.1 GENERAL

This section is not applicable for structural and architectural.

END OF CHAPTER 4

CHAPTER 5

5. COMPONENT DETAILS

This section is not applicable for structural and architectural.

END OF CHAPTER 5

CHAPTER 6

6. OPERATING PROCEDURES

6.1 GENERAL

This section is not applicable for structural and architectural.

END OF CHAPER 6

CHAPTER 7

7. MAINTENANCE PROCEDURES AND SERVICE INFORMATION

7.1 GENERAL

To ensure uninterrupted use, equipment should be regularly inspected, tested, and proper repairs made and recorded. The objective is to minimize equipment operating problems and prevent failures by making minor or necessary repairs before major difficulties occur. The importance of record keeping cannot be over-emphasized. Good maintenance protects the owner's interest with manufacturer warranties, continuity, or maintenance despite staff turnovers and equipment reliability track record.

Environmental and operating conditions are key elements affecting proper and reliable operation of equipment. Costly repairs can be minimized if the following items are attended to:

KEEP IT CLEAN

KEEP IT TIGHT

7.1.1 Keep It Clean

Day-to day accumulation of normal atmospheric particles, lint, metallic particles form mechanical equipment cause problems with equipment over a long period of time. An accumulation affects equipment reliability and operating life. ALL equipment should be regularly cleaned.

7.1.2 Keep It Tight

All contactors and control devices operate with high speed movement. This motion creates vibration that can loosen hardware and other parts. External vibration from equipment may cause the loosening of hardware and connections in any equipment. All hardware and connections should be tightened regularly. This simple procedure takes only a small amount of time and can save hours of searching for intermittent problems. All rotating equipment such as motors are affected by vibrations. This can cause alignment problems, which can result in bearing failures.

7.1.3 Renewal Parts

Availability of parts can be a major problem these days as distributors are keeping very low inventories in a move to economize. This may make any part a long delivery item. For this reason local distributors should be contacted and parts availability assessed.

Any critical part affecting the reliability of the system should be ordered, recorded and stored by the maintenance department.

7.1.4 Parts and Equipment Ordering Procedure

During the first year of operation, the Contractor should be contacted for any replacement parts required. This will ensure that parts covered by warranty will be replaced under warranty. Failure to contact the Contractor may result in difficulties in obtaining warranty replacement.

Following the first year of operation, it is recommended that the Contractor also be contacted as many of the suppliers have a wholesale only policy. If it is necessary to purchase parts directly from the original supplier, the following information is required.

Make

Model No.

Year of Installation

Installing Contractor

Description of Part Required (i.e. Fan Bearing)

Part No. if Available

When quoting a part number contained in manufacturer's catalogue, always provide the date of the catalogue you are referring to, as these numbers are often subject to change. The equipment supplier will have the latest edition of the manufacturer's catalogue.

If the original supplier is no longer in business, contact the contractor who will be able to suggest an alternate source of supply.

7.1.5 Scheduled Preventive Maintenance Program

Scheduled preventive maintenance is an effective means to improve services from systems and equipment. Where failure of equipment can result in shutdown, scheduled preventive maintenance is an economical alternative.

MAINTENANCE SCHEDULE

From the structural and architectural point of view the only item requiring maintenance is caulking. Caulking is to be inspected once a per year and repaired/replaced as necessary.

MAINTENANCE MANUALS

This section is not applicable for structural and architectural.

SPARE PARTS LIST

This section is not applicable for structural and architectural.

END OF CHAPTER 7

CHAPTER 8

8. TESTING AND CERTIFICATION

Testing records, certificates and warranties are provided in **Appendix G**.

CHAPTER 9

9. CONTACT SERVICE INFORMATION

This section is not applicable for structural and architectural.

APPENDIX

APPENDIX A

AS-BUILT DRAWINGS

PROVIDED IN A SEPARATE FOLDER

APPENDIX B

APPROVED SHOP DRAWINGS

SUBMITTALS IDENTIFICATION SHEET

PROJECT: Wastewater Treatment Plant Upgrade
Iqaluit, Nunavut

NUNAMI
STANTEC LIMITED

1088C Noble House
Iqaluit NU
www.stantec.com

CONTRACTOR: Kudlik Construction Ltd, Project 2018-062

Telephone: 867-979-1166

E-mail: srousseau@kudlik.biz

SUBCONTRACTOR: Structure MH

Person responsible: Moise Harvey

Telephone: (418)487-8772 E-mail: structures.mh@gmail.com

PRODUCT SUBMITTED:

☑ As Specified

☐ Alternate

SUPPLIER or MANUFACTURER:

Person responsible:

Telephone: E-mail:

DESCRIPTION OF SUBMITTAL:

# of pages:

Reference to drawings:

Reference to specs:

Division: 05 Section: 05 12 23 - 05 21 00

REMARKS:

Ladder mechanical room

REVIEW AND COMMENTS (for use by Consultants):

STANTEC PROJECT #: 110126045

SUBMITTAL # STC-013

This review by Stantec is for general conformance with the design concept of Stantec's design of the:

☑ Architectural ☐ Structural ☐ Mechanical ☐ Electrical ☐ Other

component(s) only and does not mean that Stantec has verified or approves the shop drawing(s). The Contractor remains solely responsible for the shop drawing(s) and this review by Stantec does not relieve the Contractor of the Contractor's responsibility for errors or omissions in the shop drawing(s) or for meeting all requirements of the contract documents. This review does not mean that Stantec approves the detailed design inherent in the shop drawing, responsibility for which shall remain with the Contractor submitting same, nor does this review mean that Stantec accepts any deviation of the shop drawing(s) from the contract documents. The Contractor is responsible for confirming all dimensions and correlating them at the job site, for all construction means, methods and techniques, and for coordination of construction work of all trades, including coordination of all shop drawings.

Stantec

☑ REVIEWED

☐ REVIEWED, AS NOTED

☐ REVISE AND RESUBMIT

☐ NOT REVIEWED

DATE 2018-12-20

BY TFlender

Review of this submission is for compliance with general intent of the contract. This review does not relieve the Sub-Contractor, Supplier or Manufacturer of responsibility for error or omissions in the submission or the responsibility of meeting all requirements of the contract documents. Any deviation from the contract documents initiated by the Sub-Contractor, Supplier or Manufacturer shall be at their sole risk. QUANTITIES AND DETAIL DIMENSIONS ARE THE SUB-CONTRACTORS OR SUPPLIERS RESPONSIBILITY. VERIFY DATA WITH FIELD DIMENSIONS.

SUBMITTAL TRACKING No.: **STC-013**

2018-12-06

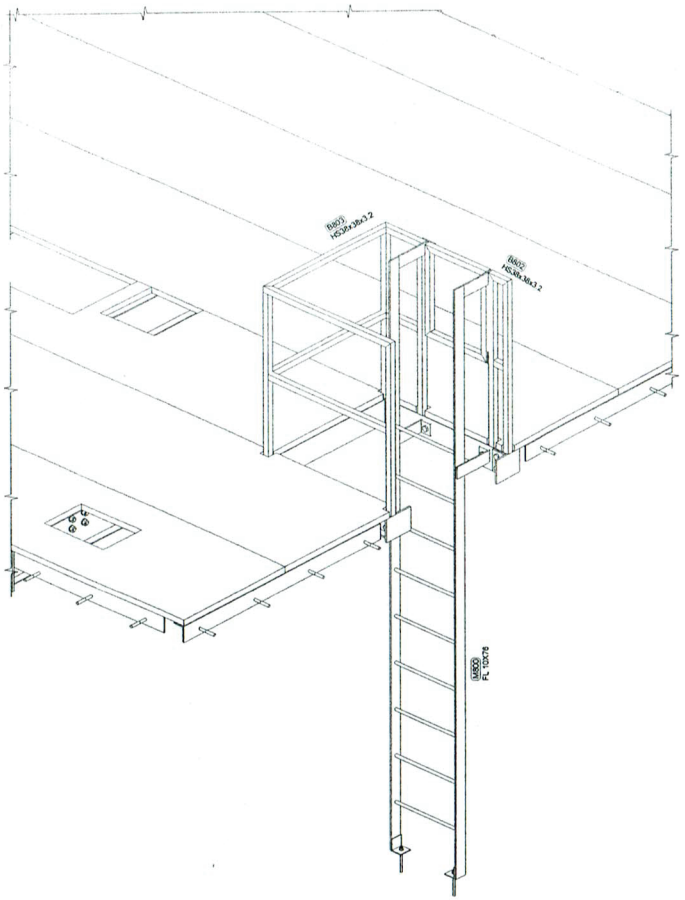

3D view

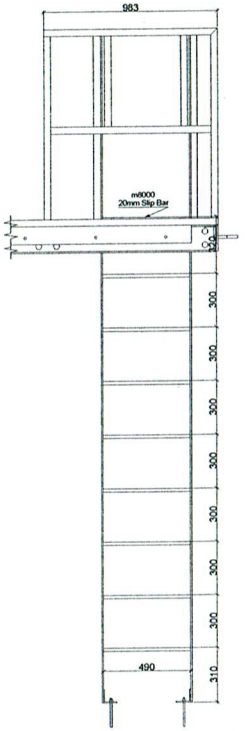

3D view

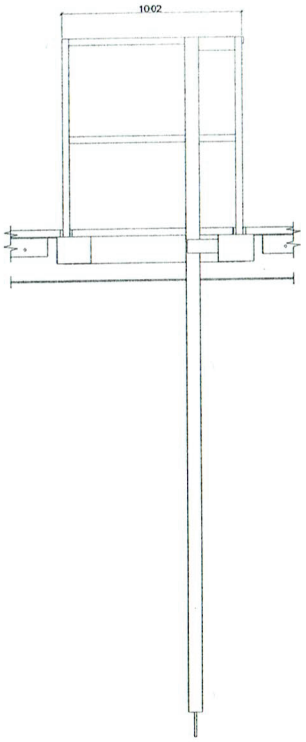

3D view

PROJET :

Iqaluit Waste

Water Treatment

-ANCRAGE M16 HILTI HAS STAINLESS STEEL

-USE THE HILTI HIT HY-200 FOR ANCRAGE

Rev.	Date	Par	Description

Date : 2018-12-06

INGÉNIEUR : JEAN TRUDEAU

Client : KUDLIK CONST.

Projet : Plans new floor

No. Projet : MH.2018.08-40_ST

Détaillé par : MOISE HARVEY

TITRE : Ladder for acces new floor

Soudure : E7XXXELECT

Trou :

Acier :

Peinture : Galvanisé

No. Dessin : A-01

Séquence : 0

REGISTERED PROFESSIONAL ENGINEER NT/NU

Marque	Quantité	Description	Longueur	Nuance	Finition	Poids	Poids total
M800	1	Echelle profil				47.606	95.212
m8001	2	FL 10X76	3790.0	G40.21	Galvanisé	4.314	8.628
m8002	2	PLT10x76x328	328.0	G40.21	Galvanisé	2.991	5.981
b8002	2	FL 10X76	238.1	300W		2.419	21.774
m8000	9	RB 3/4	490.5	G40.21	Galvanisé	1.225	2.450
b8006	2	L3X3X1/4	76.2	A36		134.046	134.046
	17						134.046
	17						

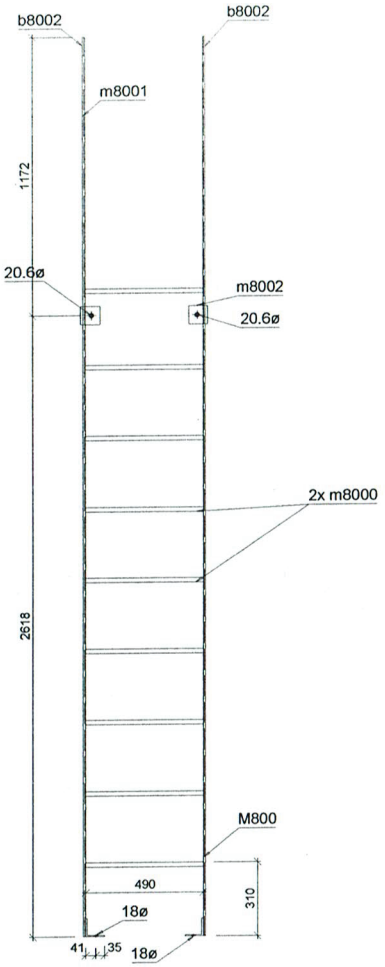

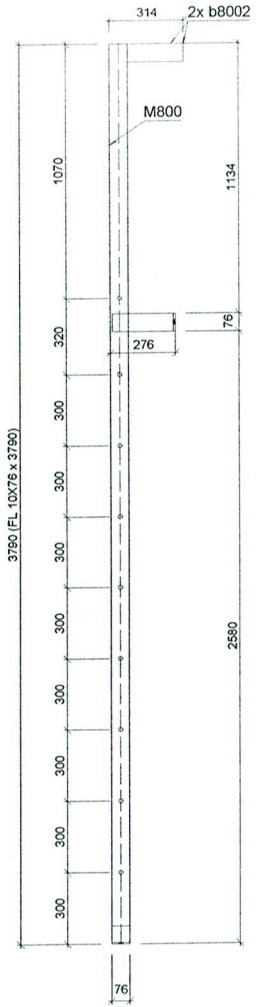

REGISTERED PROFESSIONAL ENGINEER
NT/NU
04/12/18

1 - M800 FL 10X76

6.3

Sauf indication contraire

Rev.	Date	Par	Description

Projet : Plans new floor

No. Projet : MH.2018.0840_ST

Statut :	Commentaire :	
Détaillé par : Mosie Harvey	Trou : 13/16"Ø u/n	Client : KUDLIK CONST.
Vérifié par: Jean Trudeau	Soudure : E70XXELECT	No. Dessin : M800
STRUCTURES M.H. inc. ENTREPRENEUR GÉNÉRAL	Acier : G40.21	
	Peinture: Galvanisé	Sequence : 0
	Date : 2018-12-04	

Quantité	Description	Longueur	Finition
2	19.1x A325	44	Galvanisé

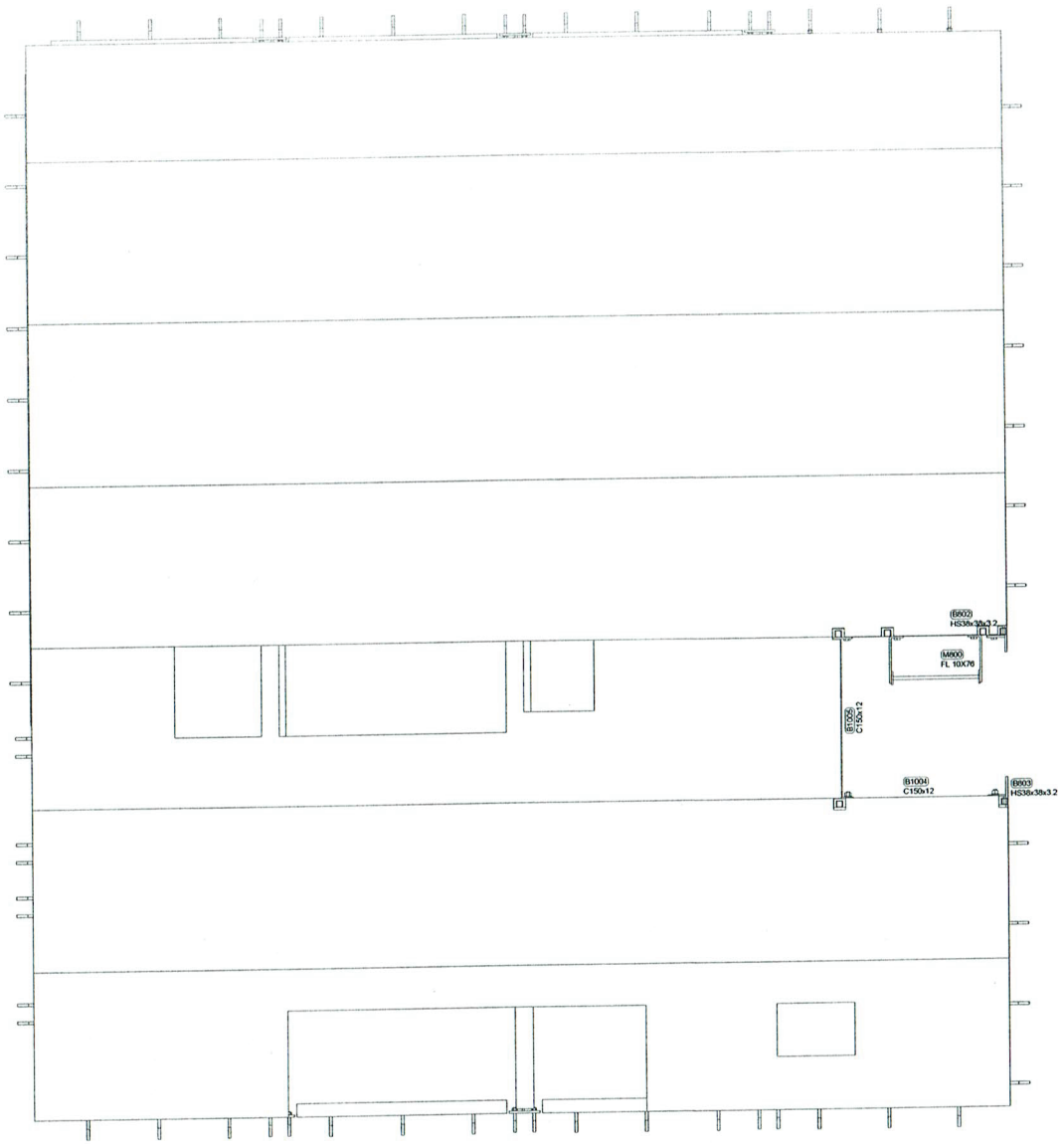

3D view
Review of chimney passages in the grating
The holes in the grating and dimensions will have to be checked before construction by the generals in mechanics.

REGISTERED PROFESSIONAL ENGINEER
STRUCTURE
06/12/18
NT/NU

PROJET :

Iqaluit Waste Water Treatment

TYPIQUE :
-GRAITING : (19W4) 1PO½ X $\frac{3}{16}$

-ALL BOLT ¾ GALVANIZED

-ANCRAGE M16 HILTI HAS STAINLESS STEEL

-USE THE HILTI HIT HY-200 FOR ANCRAGE

Review of chimney passages in the grating
The holes in the grating and dimensions will have to be checked before construction by the generals in mechanics.

Rev.	Date	Par	Description
REV-B	2018-08-27	Julie Lajoie	Réajustement d'ouverture.

STRUCTURES M.H. inc.
ENTREPRENEUR GÉNÉRAL
1670 Av. de la Technologie, Alma G8C 1J9
Téléphone : 418 400-2106 Télécopieur : 418 669-9225
structures.mh@gmail.com
RBQ : 5612-0215-01

Date : 2018-08-24

INGÉNIEUR : JEAN TRUDEAU

Client : KUDLIK CONST.

Projet : Plans new floor

No. Projet : MH.2018.0840_ST

Détaillé par : MOISE HARVEY

TITRE : Detail view floor graiting

Soudure : E70XXELECT
Trou : 13/16"Ø w/o
Acier :
Peinture :

No. Dessin : ST-02

Sequence : TQC

SUBMITTALS IDENTIFICATION SHEET

PROJECT: Wastewater Treatment Plant Upgrade
Iqaluit, Nunavut

NUNAMI
STANTEC LIMITED
1088C Noble House
Iqaluit NU
www.stantec.com

CONTRACTOR: Kudlik Construction Ltd, Project 2018-062

Telephone: 867-979-1166

E-mail: srousseau@kudlik.biz

SUBCONTRACTOR: Structure MH

Person responsible: Moise Harvey

Telephone: (418)487-8772 E-mail: structures.mh@gmail.com

PRODUCT SUBMITTED:

☑ As Specified

☐ Alternate

SUPPLIER or MANUFACTURER:

Person responsible:

Telephone: E-mail:

DESCRIPTION OF SUBMITTAL:

# of pages:

Reference to drawings:

Reference to specs:

Division: 05 Section: 05 12 23 - 05 21 00

REMARKS:

Exterior railing

REVIEW AND COMMENTS (for use by Consultants):

STANTEC PROJECT #: 110126045

SUBMITTAL # STC-014

This review by Stantec is for general conformance with the design concept of Stantec's design of the:

☑ Architectural ☐ Electrical
☐ Structural ☐ Other
☐ Mechanical

component(s) only and does not mean that Stantec has verified or approves the shop drawing(s). The Contractor remains solely responsible for the shop drawing(s) and this review by Stantec does not relieve the Contractor of the Contractor's responsibility for errors or omissions in the shop drawing(s) or for meeting all requirements of the contract documents. This review does not mean that Stantec approves the detailed design inherent in the shop drawing, responsibility for which shall remain with the Contractor submitting same, nor does this review mean that Stantec accepts any deviation of the shop drawing(s) from the contract documents. The Contractor is responsible for confirming all dimensions and correlating them at the job site, for all construction means, methods and techniques, and for coordination of construction work of all trades, including coordination of all shop drawings.

Stantec

☐ REVIEWED

☑ REVIEWED, AS NOTED

☐ REVISE AND RESUBMIT

☐ NOT REVIEWED

DATE 2019-01-03

BY Jason King

See Comments in Red

Review of this submission is for compliance with general intent of the contract. This review does not relieve the Sub-Contractor, Supplier or Manufacturer of responsibility for error or omissions in the submission or the responsibility of meeting all requirements of the contract documents. Any deviation from the contract documents initiated by the Sub-Contractor, Supplier or Manufacturer shall be at their sole risk. QUANTITIES AND DETAIL DIMENSIONS ARE THE SUB-CONTRACTORS OR SUPPLIERS RESPONSIBILITY. VERIFY DATA WITH FIELD DIMENSIONS.

SUBMITTAL TRACKING No.: **STC-014**

2018-12-05

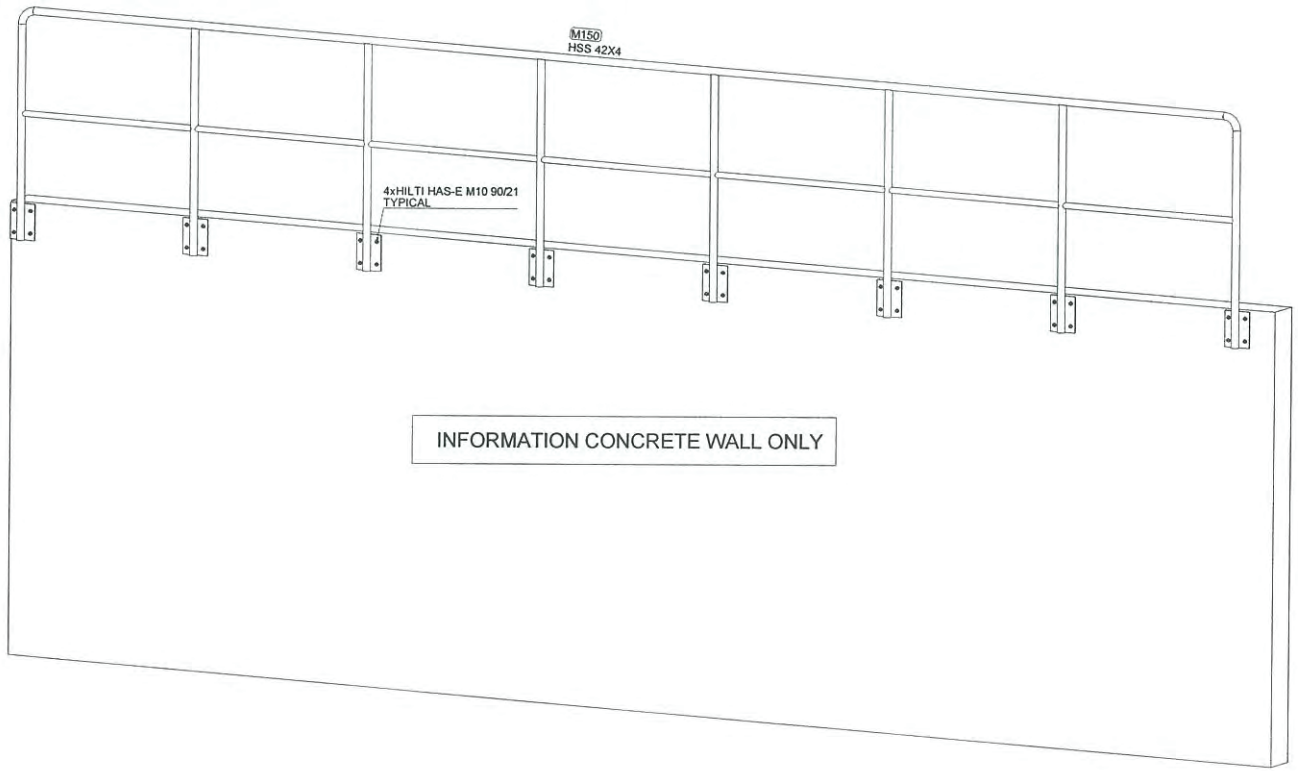

3D VIEW

PROJET :
IQALUIT
WASTEWATER TREATMENT PLANT
OUT SIDE NEW RAILING
AXE 5 & A,B

REGISTERED PROFESSIONAL ENGINEER
TRUDEAU
JEAN
01/12/18
NT/NU

Rev.	Date	Par	Description

STRUCTURES M.H. inc.
ENTREPRENEUR GÉNÉRAL
1670 Av. de la Technologie, Alma G3C 1E0
Téléphone : 418 480-2186 Télécopieur : 418 668-9235
structures.mh@gmail.com
RBQ : 5612-0215-01

Date : 2018-11-29

INGÉNIEUR :

Client :
KUDLIK CONST.

Projet :
Out Side New Railing Axe 5 & A,B

No. Projet :
MH.2018.0840_ST

Détaillé par :
Julie Lajoie

TITRE :

Soudure : E70XXELECT
Trou : 13/16"Ø w/n
Acier : 350W CL C,C250G,G40.21
Peinture, Galvanisé

No. Dessin :
ST-150

Sequence
0

Marque	Quantité	Description	Longueur	Nuance	Finition	Poids	Poids total
M150	1	Garde-corps main courante palier					
m1504	1	HSS 42X4	7295.0	350W-CL.C	Galvanisé	59.974	59.974
m1501	6	HSS 42X4	1253.8	350W-CL.C	Galvanisé	10.308	61.847
m1502	2	HSS 42X4	1194.0	350W-CL.C	Galvanisé	9.816	19.632
m1500	7	HSS 33X2.6	1038.9	350W-CL.C	Galvanisé	4.482	31.372
p1500	8	PLT6x150x200	200.0	G40.21	Galvanisé	3.115	24.921
m1503	2	HSS 42X4	152.4	G40.21	Galvanisé	0.981	1.963
	26					199.709	199.709
	26						199.709

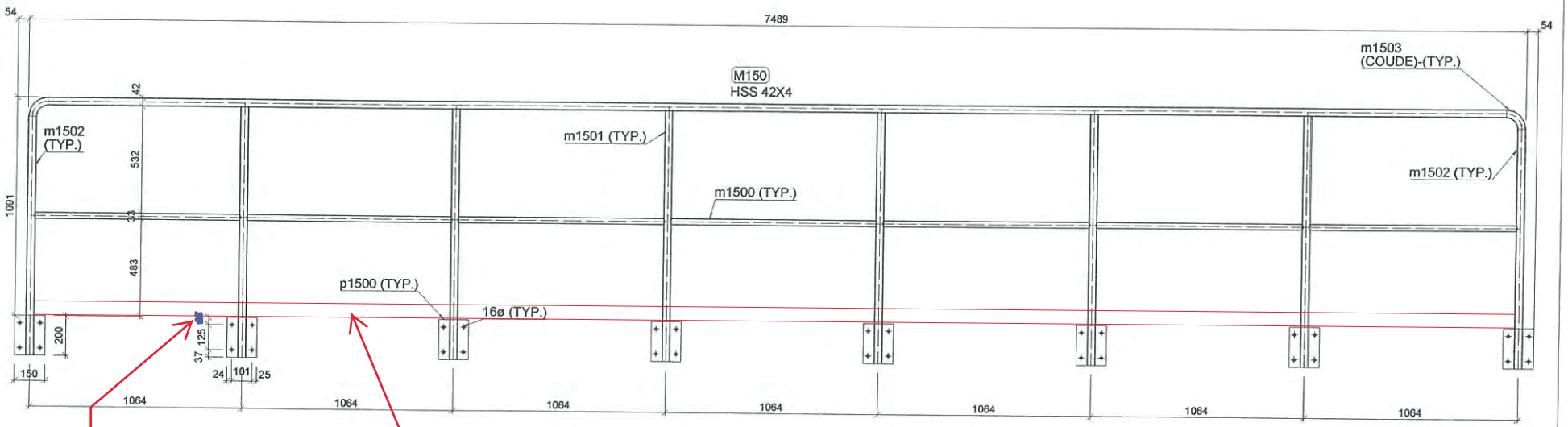

1 - M150 HSS 42X4

REGISTERED PROFESSIONAL ENGINEER
TRUDEAU
NT/NU

Rev.	Date	Par	Description

Projet : Out Side New Railing Axe 5 & A,B
No. Projet : MH.2018.0840_ST

Statut :	Commentaire :	
Détaillé par : Julie Lajoie	Trou : 13/16"Ø u/n	Client : KUDLIK CONST.
Vérifié par: Jean Trudeau	Soudure : E70XXELECT	No. Dessin : M150
STRUCTURES M.H. inc. ENTREPRENEUR GÉNÉRAL	Acier : 350W-CL.C	
	Peinture: Galvanisé	Sequence : 0
	Date : 2018-11-29	

SUBMITTALS IDENTIFICATION SHEET

PROJECT: Wastewater Treatment Plant Upgrade
Iqaluit, Nunavut

NUNAMI
STANTEC LIMITED
1088C Noble House
Iqaluit NU
www.stantec.com

CONTRACTOR: Kudlik Construction Ltd, Project 2018-062

Telephone: 867-979-1166

E-mail: srousseau@kudlik.biz

SUBCONTRACTOR: Structure MH

Person responsible: Moise Harvey

Telephone: (418)487-8772 E-mail: structures.mh@gmail.com

PRODUCT SUBMITTED:

☑ As Specified

☐ Alternate

SUPPLIER or MANUFACTURER:

Person responsible:

Telephone: E-mail:

DESCRIPTION OF SUBMITTAL:

# of pages:

Reference to drawings:

Reference to specs:

Division: 05 Section: 05 12 23 - 05 21 00

REMARKS:

Railing

REVIEW AND COMMENTS (for use by Consultants):

STANTEC PROJECT #: 110126045

SUBMITTAL # STC-019 railing

This review by Stantec is for general conformance with the design concept of Stantec's design of the:

☑ Architectural ☐ Electrical
☐ Structural ☐ Other
☐ Mechanical

component(s) only and does not mean that Stantec has verified or approves the shop drawing(s). The Contractor remains solely responsible for the shop drawing(s) and this review by Stantec does not relieve the Contractor of the Contractor's responsibility for errors or omissions in the shop drawing(s) or for meeting all requirements of the contract documents. This review does not mean that Stantec approves the detailed design inherent in the shop drawing, responsibility for which shall remain with the Contractor submitting same, nor does this review mean that Stantec accepts any deviation of the shop drawing(s) from the contract documents. The Contractor is responsible for confirming all dimensions and correlating them at the job site, for all construction means, methods and techniques, and for coordination of construction work of all trades, including coordination of all shop drawings.

Stantec

☑ REVIEWED

☐ REVIEWED, AS NOTED

☐ REVISE AND RESUBMIT

☐ NOT REVIEWED

DATE 2019-02-19

BY TFlender

Review of this submission is for compliance with general intent of the contract. This review does not relieve the Sub-Contractor, Supplier or Manufacturer of responsibility for error or omissions in the submission or the responsibility of meeting all requirements of the contract documents. Any deviation from the contract documents initiated by the Sub-Contractor, Supplier or Manufacturer shall be at their sole risk. QUANTITIES AND DETAIL DIMENSIONS ARE THE SUB-CONTRACTORS OR SUPPLIERS RESPONSIBILITY. VERIFY DATA WITH FIELD DIMENSIONS.

SUBMITTAL TRACKING No.: **STC-018**

2018-12-12

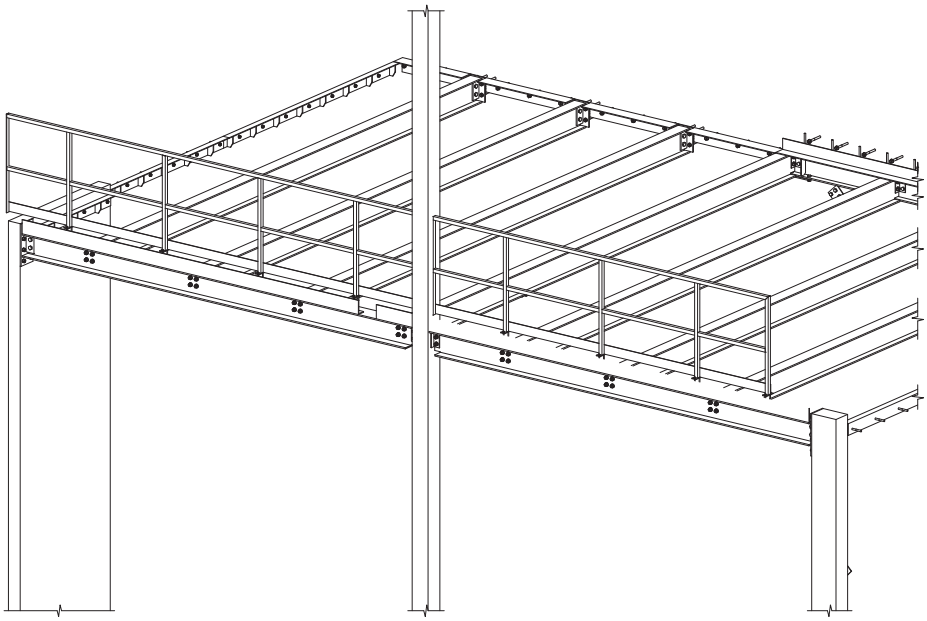

3D view

PROJET :

IQALUIT
WASTEWATER TREATMENT

NEW RAILING
AXE 5 & D,F

-ALL STEEL IS GALVANIZED

-ALL GUARDS ARE 1070mm HEIGHT

Rev.	Date	Par	Description

STRUCTURES M.H. inc.
ENTREPRENEUR GÉNÉRAL
1670 Av. de la Technologie, Alma Qbc 120
Téléphone : 418 480-2186 Télécopieur : 418 668-9235
structures.mh@gmail.com

Date : 2018-12-05

INGÉNIEUR : Jean trudeau

Client : Construction Gely

Projet : Floor reinforcement

No. Projet : MH.2018.0839_ST

Détaillé par : Julie Lajoie

TITRE : NEW RAILING AXE D AND 4,5

Soudure : E7000ELECT
Trou : 13/16"Ø un
Acier :
Peinture :

No. Dessin : A-01

Sequence : 0

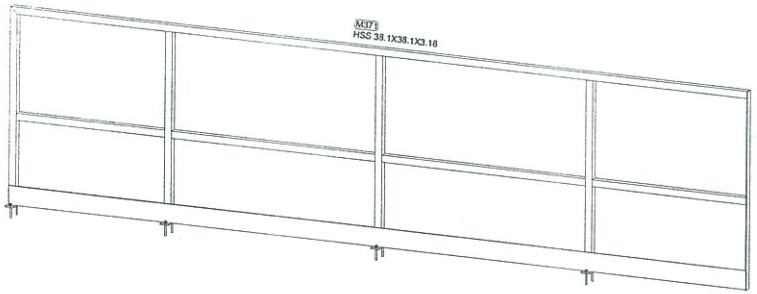

3D VIEW M371

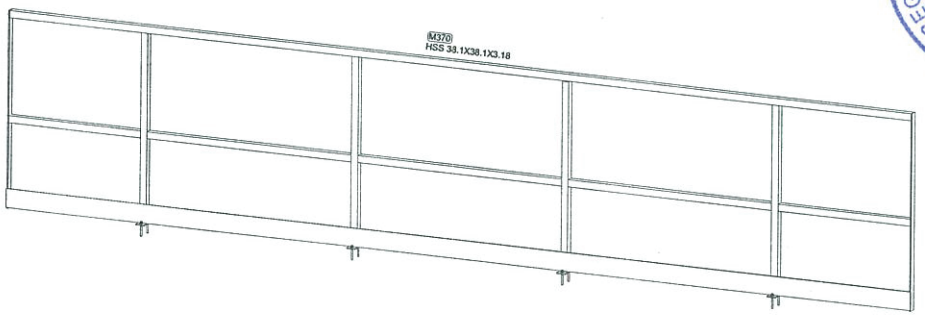

3D VIEW M370

REGISTERED PROFESSIONAL ENGINEER
NT/NU
04/12/18

PROJET :

IQALUIT
WASTEWATER TREATMENT

NEW RAILING
AXE 5 & D,F

-TOUS L'ACIER EST GALVANISÉ
-ALL STEEL IS GALVANIZED

-TOUS LES GARDE-CORPS SONT D'UNE HAUTEUR DE 1070mm
-ALL GUARDS ARE 1070mm HEIGHT

ALL WELDING COMPLIES WITH CWB STANDARDS

Rev.	Date	Par	Description

STRUCTURES M.H. inc.
ENTREPRENEUR GÉNÉRAL
1670 Av. de la Technologie, Alma, QC, G8B 2B9
Téléphone : 418 460-2186 Télécopieur : 418 668-0255
structures.mh@gmail.com
NBQ : 5612-6215-01

Date : 2018-11-28

INGÉNIEUR :

Client : Construction Gely

Projet : Floor reinforcement

No. Projet : MH.2018.0839_ST

Détaillé par : Julie Lajoie

TITRE : VIEW 3D
M370 & M371

Soudure : ETOH/ELECT
Tirage : 1/2/1/2 pin
Acier : 300W,250W/CL,C,C40,21
Peinture : Galvanisé

No. Dessin : ST-00

Sequence : 0

Marque	Quantité	Description	Longueur	Nuance	Finition	Poids	Poids total
M370	1						
b3701	1	FL 6X102	5240.0	300W	Galvanisé	58.506	58.506
m3702	1	HSS 38.1X38.1X3.18	5227.7	350W-CL.C	Galvanisé	38.032	38.032
m3701	3	HSS 38.1X38.1X3.18	1181.9	350W-CL.C	Galvanisé	8.599	25.796
m3700	4	HSS 38.1X38.1X3.18	1025.9	350W-CL.C	Galvanisé	7.464	29.855
m3706	1	HSS 38.1X38.1X3.18	770.9	350W-CL.C	Galvanisé	5.609	5.609
m3707	1	HSS 38.1X38.1X3.18	764.9	350W-CL.C	Galvanisé	5.565	5.565
b3700	2	FL 6X38	1070.0	300W	Galvanisé	4.480	8.960
bp3700	4	PL16x50.1x114.1	114.1	G40.21		0.594	2.374
	17					174.698	174.698
	17						174.698

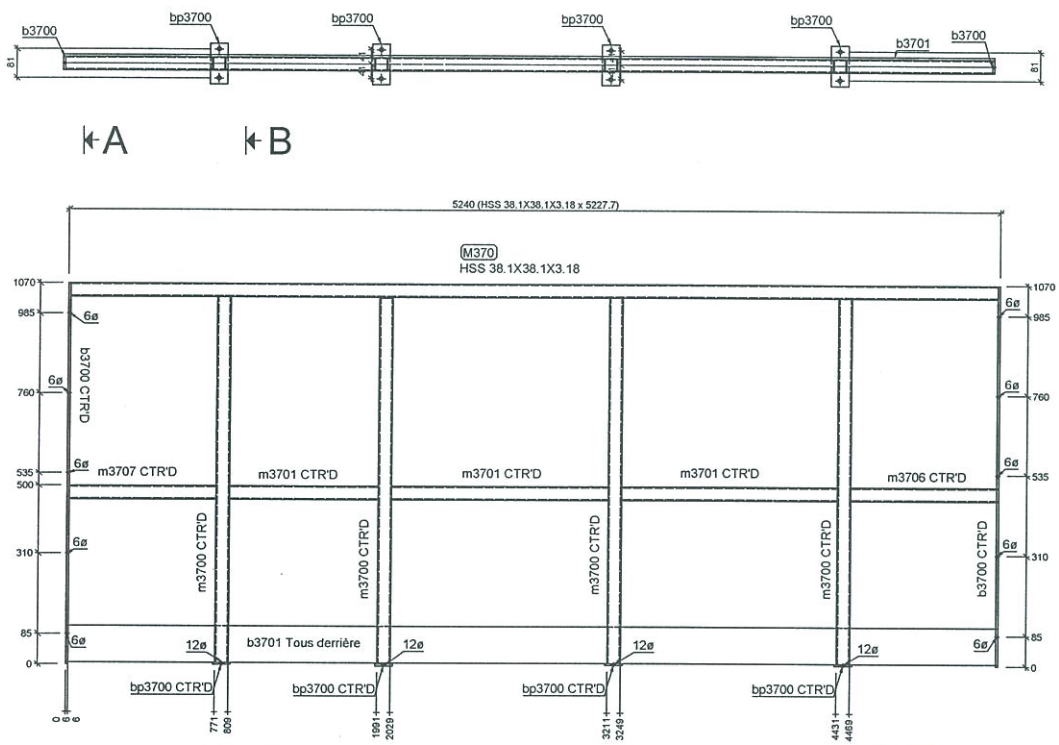

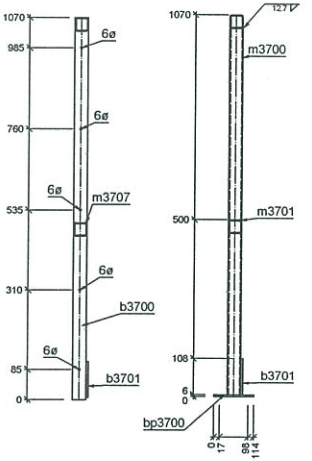

Section A - A

Section B - B

1 - M370 HSS 38.1X38.1X3.18

d=38.1 b=38.1 t=3.2 w=3.2 k=

Grid reference (D/5)/(E/5)

REGISTERED PROFESSIONAL ENGINEER
TRUDEAU
LICENSEE
NT/NU

Rev.	Date	Par	Description

Projet : Floor reinforcement

No. Projet : MH.2018.0839_ST

Statut :	Commentaire :	
Détaillé par : Julie Lajoie	Trou : 13/16"Ø u/n	Client : Construction Gely
Vérifié par: Jean trudeau	Soudure : E70XXELECT	No. Dessin : M370
STRUCTURES M.H. inc. ENTREPRENEUR GÉNÉRAL	Acier : 350W-CL.C	
	Peinture: Galvanisé	Sequence : 0
	Date : 2018-11-28	

Marque	Quantité	Description	Longueur	Nuance	Finition	Poids	Poids total
M371	1						
b3702	1	FL 6X102	4280.0	300W	Galvanisé	47.788	47.788
m3703	1	HSS 38.1X38.1X3.18	4273.6	350W-CL.C	Galvanisé	31.092	31.092
m3701	2	HSS 38.1X38.1X3.18	1181.9	350W-CL.C	Galvanisé	8.599	17.197
b3704	1	HSS 38.1X38.1X3.18	1064.0	350W-CL.C	Galvanisé	7.741	7.741
m3700	3	HSS 38.1X38.1X3.18	1025.9	350W-CL.C	Galvanisé	7.464	22.391
m3704	1	HSS 38.1X38.1X3.18	894.6	350W-CL.C	Galvanisé	6.508	6.508
m3705	1	HSS 38.1X38.1X3.18	862.9	350W-CL.C	Galvanisé	6.278	6.278
b3703	1	FL 6X38	1070.0	300W		4.480	4.480
bp3700	4	PLT6x50.1x114.1	114.1	G40.21		0.594	2.374
	15					145.850	145.850
	15						145.850

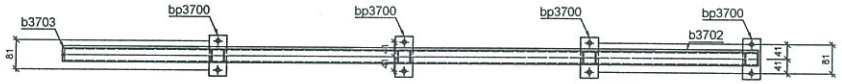

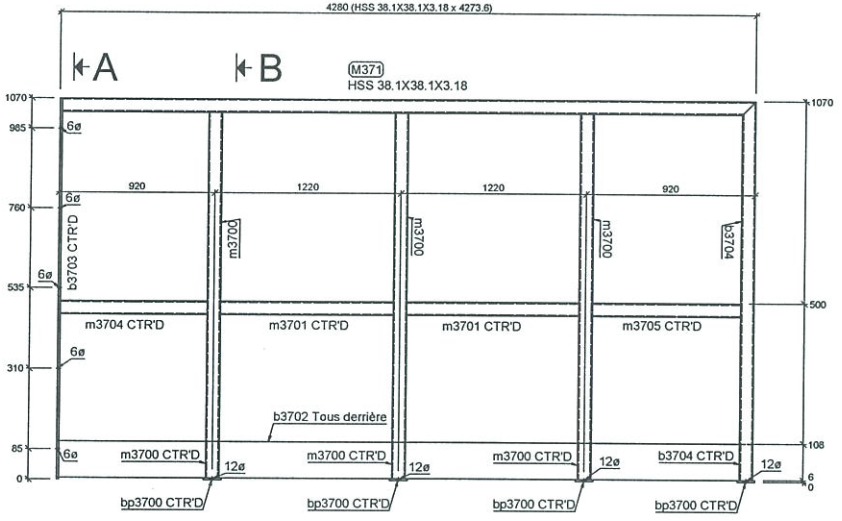

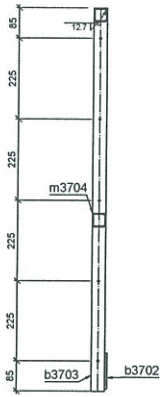

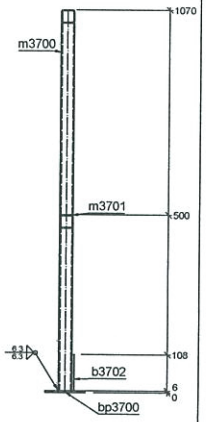

Section A - A

Section B - B

1 - M371 HSS 38.1X38.1X3.18

d=38.1 b=38.1 t=3.2 w=3.2 k=

Grid reference (E/5)/(F/5)

REGISTERED PROFESSIONAL ENGINEER
04/12/18
NT/NU

Rev.	Date	Par	Description

Projet : Floor reinforcement

No. Projet : MH.2018.0839_ST

Statut :	Commentaire :		
Détaillé par : Julie Lajoie	Trou : 13/16"Ø u/n	Client : Construction Gely	
Vérifié par: Jean trudeau	Soudure : E70XXELECT	No. Dessin :	
STRUCTURES M.H. Inc ENTREPRENEUR GÉNÉRAL	Acier : 350W-CL.C	M371	
	Peinture: Galvanisé	Sequence :	0
	Date : 2018-11-28		

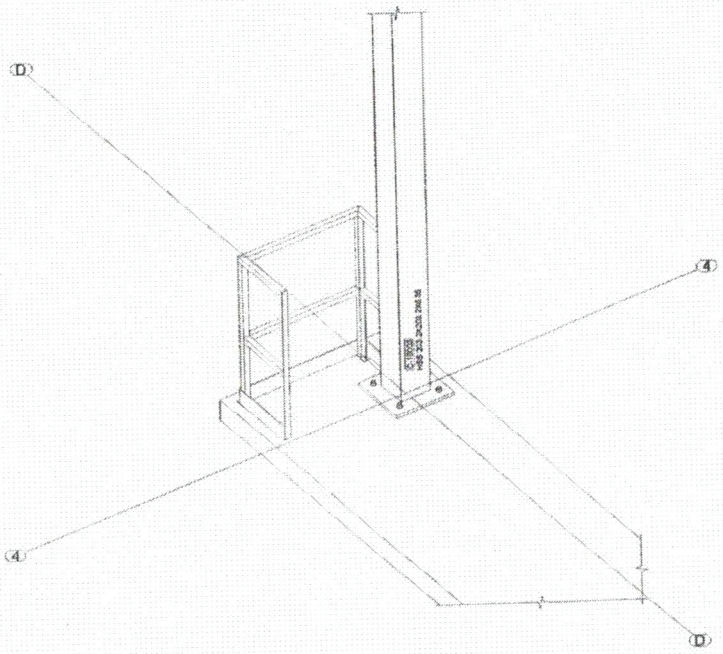

3D view



3D view

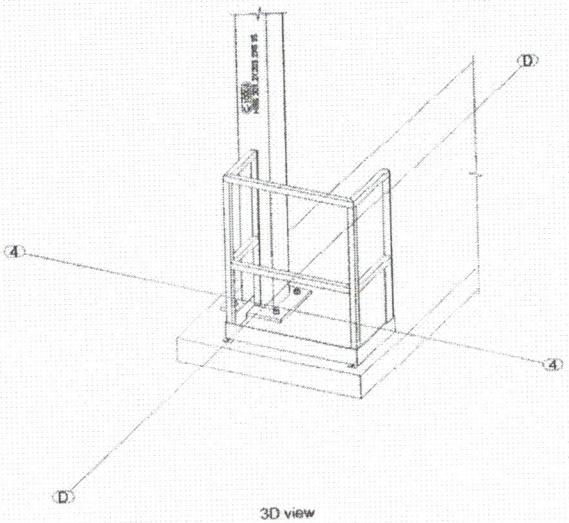

3D view

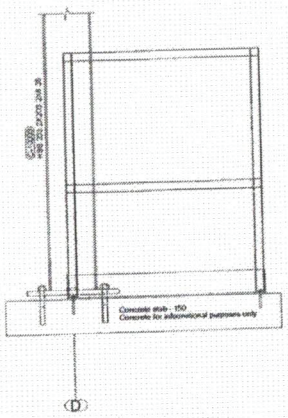

Detail view

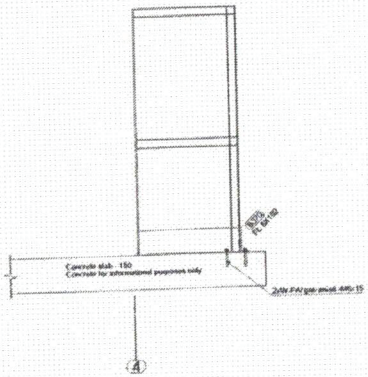

Detail view

PROJET :

IQALUIT
WASTEWATER TREATMENT

NEW RAILING
AXE 4 & E

-ALL STEEL IS GALVANIZED

-ALL GUARDS ARE 1070mm HEIGHT

REGISTERED PROFESSIONAL ENGINEER
J. TRUDEAU
LICENSEE
NT/NU

ALL WELDING ON STEEL COMPLY WITH CWB

Rev	Date	Par	Description

STRUCTURES M.H. INC.
ENTREPRENEUR GÉNÉRAL

Date : 2018-12-05

INGÉNIEUR :

Client :
Kudlik Construction

Projet :
NEW RAILLING

No. Projet :
MH.2018.0830_ST

Dessiné par :
Julie Lajoie

TITRE :
NEW RAILING AXE 4 AND E

No. Dessin :
A-01

Révision
0

Marque	Quantité	Description	Longueur	Nuance	Finition	Poids	Poids total
B370	1					0.500	0.500
b3700	1	FL 6X102	850.8	300W	Galvanisé	7.464	14.927
m3700	2	HSS 38.1X38.1X3.18	1025.9	350W-CL.C	Galvanisé	6.189	6.189
m3701	1	HSS 38.1X38.1X3.18	850.7	350W-CL.C	Galvanisé	5.635	5.635
m3702	1	HSS 38.1X38.1X3.18	774.5	350W-CL.C	Galvanisé	5.103	5.103
b3701	1	FL 6X102	457.0	300W	Galvanisé	4.430	4.430
b3703	1	FL 6X38	1058.0	300W	Galvanisé	4.271	4.271
b3704	1	FL 6X38	1020.0	300W	Galvanisé	4.165	4.165
b3702	1	FL 6X102	373.0	300W	Galvanisé	3.235	3.235
b3705	1	HS38x38x3.2	444.6	G40.21M-350W	Galvanisé	2.958	2.958
b3706	1	HS38x38x3.2	405.5	G40.21M-350W	Galvanisé	2.694	2.694
m3703	1	HSS 38.1X38.1X3.18	362.1	350W-CL.C	Galvanisé	2.357	2.357
m3704	1	HSS 38.1X38.1X3.18	324.0	350W-CL.C	Galvanisé	2.109	2.109
	13					65.404	65.404
	13						65.404

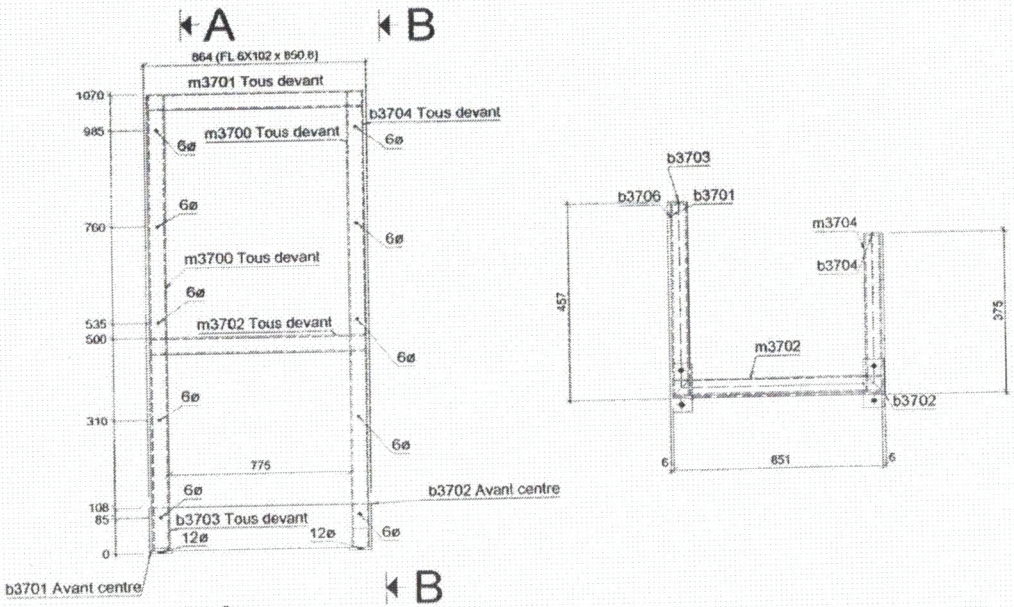

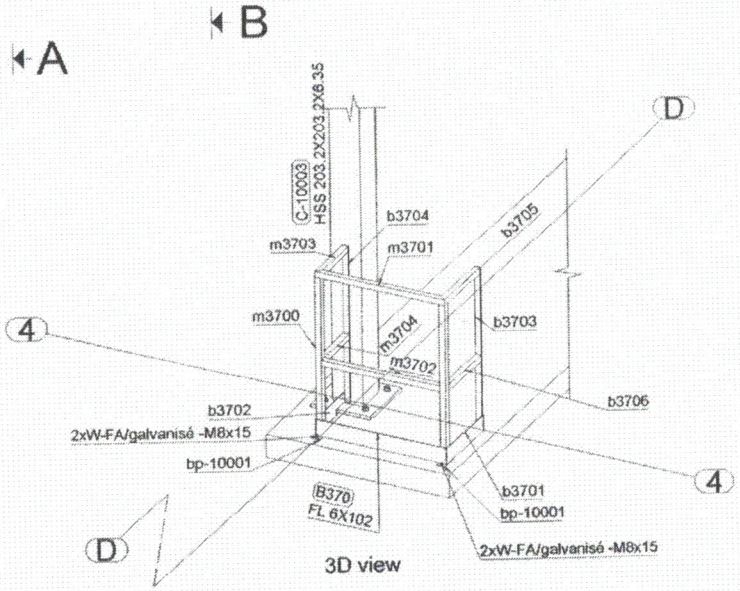

3D view

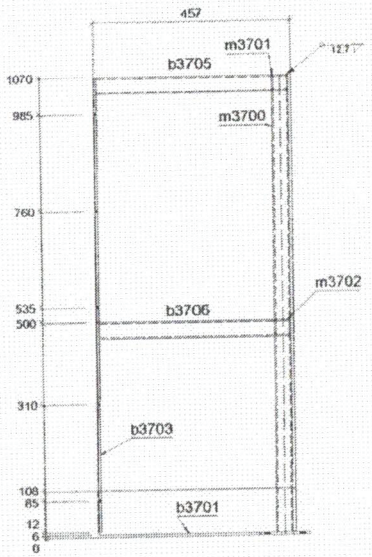

Section A - A

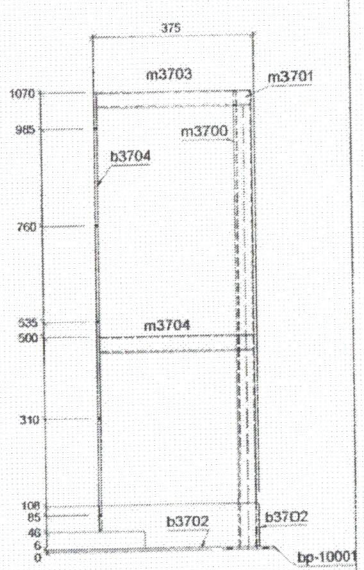

Section B - B

ALL WELDING ON STEEL COMPLY WITH CWB

1 - B370 FL 6X102

d=101.6 b=6.3 t= w=6.3 k=

Grid reference (D/4)

REGISTERED PROFESSIONAL ENGINEER
RODEAU
LICENSEE
NT/NU

Rev.	Date	Par	Description

Projet : IQALUIT - New Railling Axe 4 and E

No. Projet : MH.2018.0840

Statut :	Commentaire :	
Détaillé par : Moïse Harvey	Trou : 13/16"Ø um	Client : Kudlik Const.
Vérifié par: Jean Trudeau	Soudure : E70XXELECT	No. Dessin : B370
STRUCTURES M.H. inc.	Acier : 300W	
	Peinture : Galvanisé,Peint	Sequence : 0
	Date : 2018-12-07	

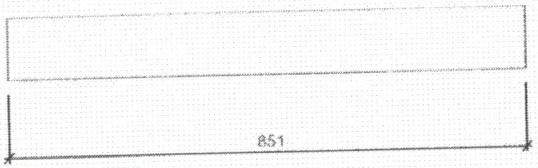

1 – FL 6X102 - 300W

REGISTERED PROFESSIONAL ENGINEER
J. TRUDEAU
LICENSEE
NT/NU

Rev.	Date	Par	Description

Projet : IQALUIT - New Railling Axe 4 and E

No. Projet : MH.2018.0840

Détaillé par : Moïse Harevy	Trou : 13/16"Ø u/n	Client Kudlik Const
Vérifié par: Jean Trudeau	Soudure : E70XXELECT	No. Dessin : 3700
STRUCTURES M.H. inc. ENTREPRENEUR GÉNÉRAL	Acier : 300W	
	Peinture: Galvanisé	Sequence : 0
	Date : 2019-12-07	

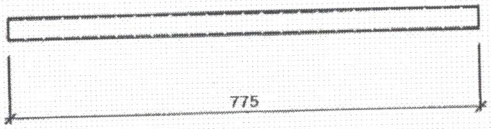

1 - m3702 HSS 38.1X38.1X3.18 - 350W-CL.C

Marque	Quantité	Description	Longueur	Nuance	Finition	Poids	Poids total
m3702	1	HSS 38.1X38.1X3.18	775	350W-CL.C	Galvanisé	2.6	2.6
	1						2.6

Marque	Quantité	Dans l'assemblage
m3702	1	B370
	1	

REGISTERED PROFESSIONAL ENGINEER
J. TRUDEAU
LICENSEE
NT/NU

Rev.	Date	Par	Description

Projet : IQALUIT - New Railling Axe 4 and E

No. Projet : MH.2018.0840

Statut :	Commentaire :	
Détaillé par : Moïse Harevy	Trou : 13/16"Ø u/n	Client Kudlik Const.
Vérifié par: Jean Trudeau	Soudure : E70XXELECT	No. Dessin : m3702
STRUCTURES M.H. inc. ENTREPRENEUR GÉNÉRAL	Acier : 350W-CL.C	
	Peinture: Galvanisé	Sequence : 0
	Date : 2018-12-07	

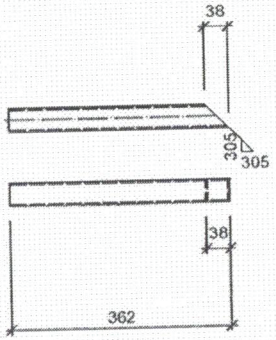

1 - m3703 HSS 38.1X38.1X3.18 - 350W-CL.C

REGISTERED PROFESSIONAL ENGINEER
J. TRUDEAU
LICENSEE
NT/NU

Rev.	Date	Par	Description

Projet : IQALUIT - New Railling Axe 4 and E

No. Projet : MH.2018.0840

Statut :	Commentaire :	
Détaillé par : Moïse Harevy	Trou : 13/16"Ø u/n	Client : Kudlik Const.
Vérifié par: Jean Trudeau	Soudure : E70XXELECT	No. Dessin : m3703
STRUCTURES M.H. Inc. ENTREPRENEUR GÉNÉRAL	Acier : 350W-CL.C	
	Peinture: Galvanisé	Sequence : 0
	Date : 2018-12-07	

Marque	Quantité	Description	Longueur	Nuance	Finition	Poids	Poids total
m3703	1	HSS 38.1X38.1X3.18	362	350W-CL.C	Galvanisé	1.2	1.2
	1						1.2

Marque	Quantité	Dans l'assemblage
m3703	1	B370
	1	

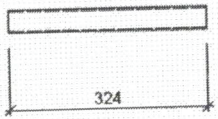

1 - m3704 HSS 38.1X38.1X3.18 - 350W-CL.C

REGISTERED PROFESSIONAL ENGINEER
J. TRUDEAU
LICENSEE
NT/NU

Rev.	Date	Par	Description

Projet : IQALUIT - New Railling Axe 4 and E

No. Projet : MH.2018.0840

Statut :	Commentaire :	
Détaillé par : Moïse Harevy	Trou : 13/16"Ø u/n	Client Kudlik Const.
Vérifié par: Jean Trudeau	Soudure : E70XXELECT	No. Dessin : m3704
STRUCTURES M.H. inc. ENTREPRENEUR GÉNÉRAL	Acier : 350W-CL.C	
	Peinture: Galvanisé	Sequence : 0
	Date : 2018-12-07	

Marque	Quantité	Description	Longueur	Nuance	Finition	Poids	Poids total
m3704	1	HSS 38.1X38.1X3.18	324	350W-CL.C	Galvanisé	1.1	1.1
	1						1.1

Marque	Quantité	Dans l'assemblage
m3704	1	B370
	1	

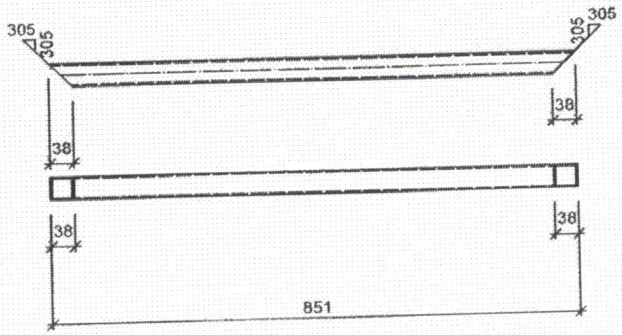

1 - m3701 HSS 38.1X38.1X3.18 - 350W-CL.C

REGISTERED PROFESSIONAL ENGINEER
J. TRUDEAU
LICENSEE
NT/NU

Rev.	Date	Par	Description

Projet : IQALUIT - New Railling Axe 4 and E

No. Projet : MH.2018.0840

Statut :	Commentaire :	
Détaillé par : Moïse Harevy	Trou : 13/16"Ø u/n	Client Kudlik Const.
Vérifié par: Jean Trudeau	Soudure : E70XXELECT	No. Dessin : m3701
STRUCTURES M.H. inc. ENTREPRENEUR GÉNÉRAL	Acier : 350W-CL.C	
	Peinture: Galvanisé	Sequence : 0
	Date : 2018-12-07	

Marque	Quantité	Description	Longueur	Nuance	Finition	Poids	Poids total
m3701	1	HSS 38.1X38.1X3.18	851	350W-CL.C	Galvanisé	2.8	2.8
	1						2.8

Marque	Quantité	Dans l'assemblage
m3701	1	B370
	1	

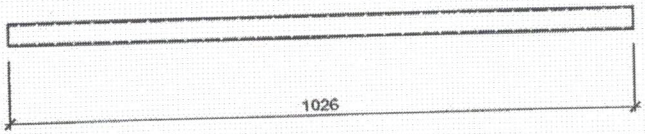

2 - m3700 HSS 38.1X38.1X3.18 - 350W-CL.C

REGISTERED PROFESSIONAL ENGINEER
J. TRUDEAU
LICENSEE
NT/NU

Rev.	Date	Par	Description

Projet : IQALUIT - New Railling Axe 4 and E

No. Projet : MH.2018.0840

Statut :	Commentaire :	
Détaillé par : Moïse Harevy	Trou : 13/16"Ø u/n	Client Kudlik Const.
Vérifié par: Jean Trudeau	Soudure : E70XXELECT	No. Dessin : m3700
STRUCTURES M.H. INC. ENTREPRENEUR GÉNÉRAL	Acier : 350W-CL.C	
	Peinture: Galvanisé	Sequence : 0
	Date : 2018-12-07	

Marque	Quantité	Description	Longueur	Nuance	Finition	Poids	Poids total
m3700	2	HSS 38.1X38.1X3.18	1026	350W-CL.C	Galvanisé	3.4	6.8
	2						6.8

Marque	Quantité	Dans l'assemblage
m3700	2	B370
	2	

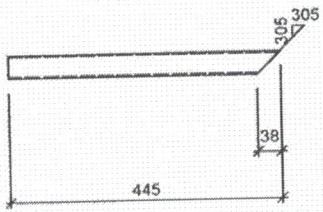

1 - b3705 HS38x38x3.2 - G40.21M-350W

REGISTERED PROFESSIONAL ENGINEER
J. TRUDEAU
LICENSEE
NT/NU

Rev.	Date	Par	Description

Projet : IQALUIT - New Railling Axe 4 and E

No. Projet : MH.2018.0840

Statut :	Commentaire :	
Détaillé par : Moïse Harevy	Trou : 13/16"Ø u/n	Client Kudlik Const.
Vérifié par: Jean Trudeau	Soudure : E70XXELECT	No. Dessin : b3705
STRUCTURES M.H. inc. ENTREPRENEUR GÉNÉRAL	Acier : G40.21M-350W	
	Peinture: Galvanisé	Sequence : 0
	Date : 2018-12-07	

Marque	Quantité	Description	Longueur	Nuance	Finition	Poids	Poids total
b3705	1	HS38x38x3.2	445	G40.21M-350W	Galvanisé	1.5	1.5
	1						1.5

Marque	Quantité	Dans l'assemblage
b3705	1	B370
	1	

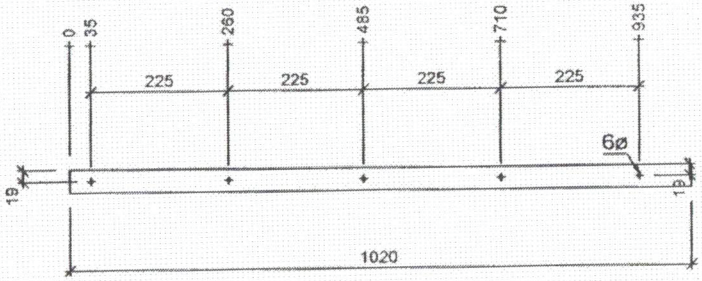

1 - b3704 FL 6X38 - 300W

REGISTERED PROFESSIONAL ENGINEER
TRUDEAU
LICENSEE
NT/NU

Rev.	Date	Par	Description

Projet : IQALUIT - New Railling Axe 4 and E

No. Projet : MH.2018.0840

Statut :	Commentaire :	
Détaillé par : Moïse Harevy	Trou : 13/16"Ø u/n	Client Kudlik Const.
Vérifié par: Jean Trudeau	Soudure : E70XXELECT	No. Dessin : b3704
STRUCTURES M.H. inc. ENTREPRENEUR GÉNÉRAL	Acier : 300W	
	Peinture: Galvanisé	Sequence : 0
	Date : 2018-12-07	

Marque	Quantité	Description	Longueur	Nuance	Finition	Poids	Poids total
b3704	1	FL 6X38	1020	300W	Galvanisé	1.9	1.9
	1						1.9

Marque	Quantité	Dans l'assemblage
b3704	1	B370
	1	

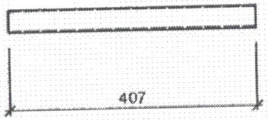

1 - b3706 HS38x38x3.2 - G40.21M-350W

Marque	Quantité	Description	Longueur	Nuance	Finition	Poids	Poids total
b3706	1	HS38x38x3.2	407	G40.21M-350W	Galvanisé	1.3	1.3
	1						1.3

Marque	Quantité	Dans l'assemblage
b3706	1	B370
	1	

REGISTERED PROFESSIONAL ENGINEER
TRUDEAU
LICENSEE
NT/NU

Rev.	Date	Par	Description

Projet : IQALUIT - New Railling Axe 4 and E

No. Projet : MH.2018.0840

Statut :	Commentaire :	
Détaillé par : Moïse Harevy	Trou : 13/16"Ø u/n	Client Kudlik Const.
Vérifié par: Jean Trudeau	Soudure : E70XXELECT	No. Dessin : b3706
STRUCTURES M.H. Inc. ENTREPRENEUR GÉNÉRAL	Acier : G40.21M-350W	
	Peinture: Galvanisé	Sequence : 0
	Date : 2018-12-07	

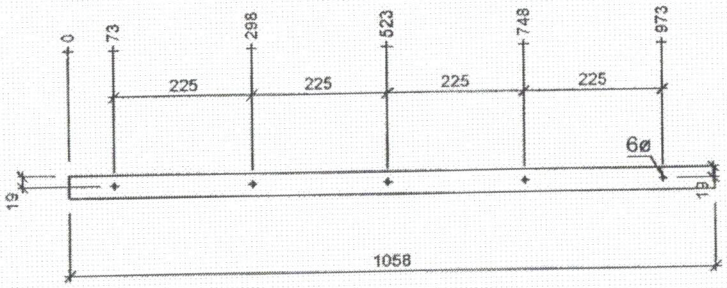

1 - b3703 FL 6X38 - 300W

REGISTERED PROFESSIONAL ENGINEER
J. TRUDEAU
LICENSEE
NT/NU

Rev.	Date	Par	Description

Projet : IQALUIT - New Railling Axe 4 and E

No. Projet : MH.2018.0840

Statut :	Commentaire :	
Détaillé par : Moïse Harevy	Trou : 13/16"Ø u/n	Client Kudlik Const.
Vérifié par: Jean Trudeau	Soudure : E70XXELECT	No. Dessin : b3703
STRUCTURES M.H. inc. ENTREPRENEUR GÉNÉRAL	Acier : 300W	
	Peinture: Galvanisé	Sequence : 0
	Date : 2018-12-07	

Marque	Quantité	Description	Longueur	Nuance	Finition	Poids	Poids total
b3703	1	FL 6X38	1058	300W	Galvanisé	2.0	2.0
	1						2.0

Marque	Quantité	Dans l'assemblage
b3703	1	B370
	1	

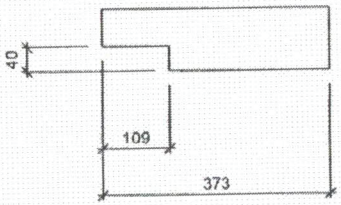

1 - b3702 FL 6X102 - 300W

REGISTERED PROFESSIONAL ENGINEER
TRUDEAU
LICENSEE
NT/NU

Rev.	Date	Par	Description

Projet : IQALUIT - New Railling Axe 4 and E

No. Projet : MH.2018.0840

Statut :	Commentaire :	
Détaillé par : Moïse Harevy	Trou : 13/16"Ø u/n	Client Kudlik Const.
Vérifié par: Jean Trudeau	Soudure : E70XXELECT	No. Dessin : b3702
STRUCTURES M.H. inc. ENTREPRENEUR GÉNÉRAL	Acier : 300W	
	Peinture: Galvanisé	Sequence : 0
	Date : 2018-12-07	

Marque	Quantité	Description	Longueur	Nuance	Finition	Poids	Poids total
b3702	1	FL 6X102	373	300W	Galvanisé	1.9	1.9
	1						1.9

Marque	Quantité	Dans l'assemblage
b3702	1	B370
	1	

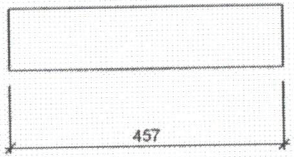

1 - b3701 FL 6X102 - 300W

REGISTERED PROFESSIONAL ENGINEER
J. TRUDEAU
LICENSEE
NT/NU

Rev.	Date	Par	Description

Projet : IQALUIT - New Railling Axe 4 and E

No. Projet : MH.2018.0840

Statut :	Commentaire :	
Détaillé par : Moïse Harevy	Trou : 13/16"Ø u/n	Client Kudlik Const.
Vérifié par: Jean Trudeau	Soudure : E70XXELECT	No. Dessin : b3701
STRUCTURES M.H. inc. ENTREPRENEUR GÉNÉRAL	Acier : 300W	
	Peinture: Galvanisé	Sequence : 0
	Date : 2018-12-07	

Marque	Quantité	Description	Longueur	Nuance	Finition	Poids	Poids total
b3701	1	FL 6X102	457	300W	Galvanisé	2.3	2.3
	1						2.3

Marque	Quantité	Dans l'assemblage
b3701	1	B370
	1	

SUBMITTALS IDENTIFICATION SHEET

PROJECT: Wastewater Treatment Plant Upgrade
Iqaluit, Nunavut

NUNAMI
STANTEC LIMITED
1088C Noble House
Iqaluit NU
www.stantec.com

CONTRACTOR: Kudlik Construction Ltd, Project 2018-062

Telephone: 867-979-1166

E-mail: srousseau@kudlik.biz

SUBCONTRACTOR: Structure MH

Person responsible: Moise Harvey

Telephone: (418)487-8772 E-mail: structures.mh@gmail.com

PRODUCT SUBMITTED:

☑ As Specified

☐ Alternate

SUPPLIER or MANUFACTURER:

Person responsible:

Telephone: E-mail:

DESCRIPTION OF SUBMITTAL:

# of pages:

Reference to drawings:

Reference to specs:

Division: 05 Section: 05

REMARKS:

Railing stair case

REVIEW AND COMMENTS (for use by Consultants):

STANTEC PROJECT #: 110126045

SUBMITTAL # STC-020 stair case handrailing

This review by Stantec is for general conformance with the design concept of Stantec's design of the:

☑ Architectural ☐ Electrical
☐ Structural ☐ Other
☐ Mechanical

component(s) only and does not mean that Stantec has verified or approves the shop drawing(s). The Contractor remains solely responsible for the shop drawing(s) and this review by Stantec does not relieve the Contractor of the Contractor's responsibility for errors or omissions in the shop drawing(s) or for meeting all requirements of the contract documents. This review does not mean that Stantec approves the detailed design inherent in the shop drawing, responsibility for which shall remain with the Contractor submitting same, nor does this review mean that Stantec accepts any deviation of the shop drawing(s) from the contract documents. The Contractor is responsible for confirming all dimensions and correlating them at the job site, for all construction means, methods and techniques, and for coordination of construction work of all trades, including coordination of all shop drawings.

Stantec

☐ REVIEWED

☑ REVIEWED, AS NOTED

☐ REVISE AND RESUBMIT

☐ NOT REVIEWED

DATE 2019-04-02

BY TFlender

Notes:
1. please ensure that all handrails are continuous without a gap.
2. please ensure that the top of the stair at G.L. 6 and at the bottom of the stair at G.L. 7 are extended min 300mm and return to the wall as shown on A-204.
3. The handrail at the top of the stair shall tie into the guardrail without a gap as per drawing A204. Detail 3/A702 shows a gap of 50mm which is an error.

Review of this submission is for compliance with general intent of the contract. This review does not relieve the Sub-Contractor, Supplier or Manufacturer of responsibility for error or omissions in the submission or the responsibility of meeting all requirements of the contract documents. Any deviation from the contract documents initiated by the Sub-Contractor, Supplier or Manufacturer shall be at their sole risk. QUANTITIES AND DETAIL DIMENSIONS ARE THE SUB-CONTRACTORS OR SUPPLIERS RESPONSIBILITY. VERIFY DATA WITH FIELD DIMENSIONS.

SUBMITTAL TRACKING No.: **STC-020**

2019-01-30

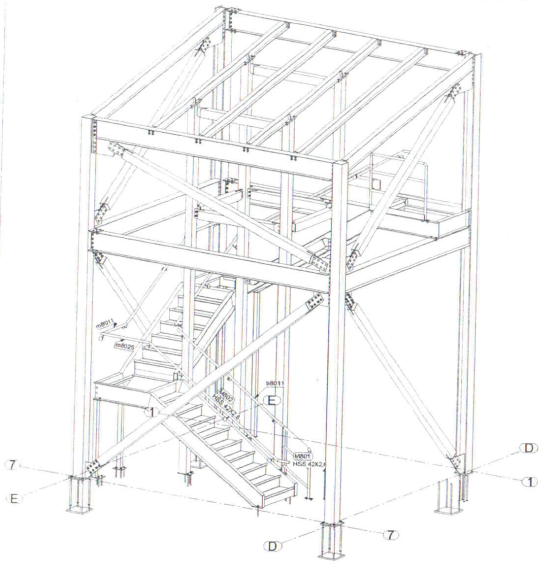

3D view

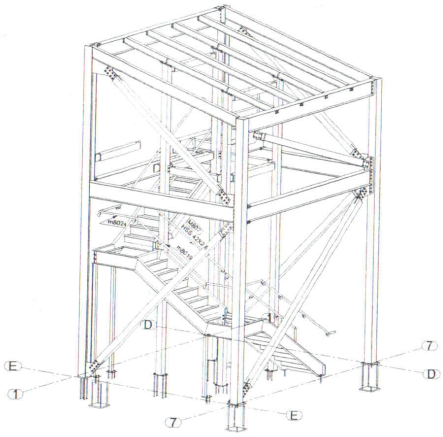

3D view

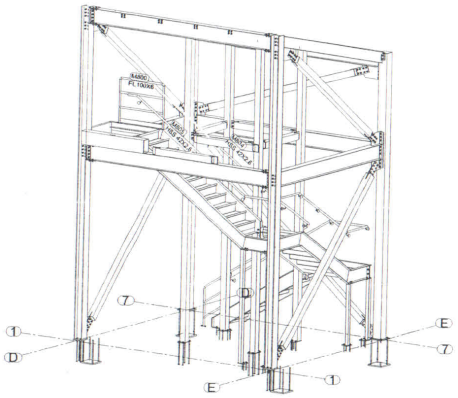

3D view

REGISTERED PROFESSIONAL ENGINEER
J. TRIDEAU
28/Jan/19
NT/NU

PROJET :

IQALUIT
WASTEWATER
TREATMENT PLANT

Rev.	Date	Par	Description

STRUCTURES M.H. inc.
ENTREPRENEUR GÉNÉRAL
1670 Av. de la Technologie, Rivi GIC 1E9
Téléphone : 418 480-2080 Télécopieur : 418 668-9235
structures.mh@gmail.com
RBQ : 5632-0215-01

Date : 2019-01-28

INGÉNIEUR : Jean Trideau

Client : kudlik construction ltd

Projet : WWTP - Main courante Cage Escalier

No. Projet : 0639-ST

Détaillé par : Moise Harvey - Julie Lajoie

TITRE : VUE 3D

Structure : ETRAXEL001
Trou : 1910 W.wh
Aide : [illegible]
Pasteur : [illegible]

No. Dessin : MT-00

Séquence : 0

38 (RB 1/2 x 38)



3 - B810 RB 1/2

d=13 b=13 t= w= k=

Grid reference (/), (/), (/)

Marque	Quantité	Description	Longueur	Nuance	Finition	Poids	Poids total
B810	3						
b8023	3	RB 1/2	38.0	A36	Peint	0.083	0.250
	3					0.083	0.250
	3						0.250

Quantité	Description	Longueur	Finition

REGISTERED PROFESSIONAL ENGINEER
NT/NU

Rev.	Date	Par	Description

Projet : WWTP - Main courante Cage Escalier

No. Projet : 0839-ST

Statut :	Commentaire :	
Détaillé par : Moise Harvey	Trou : 13/16"Ø u/n	Client : construction ltd
Vérifié par: Jean Trudeau	Soudure : E70XXELECT	No. Dessin : B810
STRUCTURES M.H. inc. ENTREPRENEUR GÉNÉRAL	Acier : A36	
	Peinture: Peint	Sequence : 0
	Date : 2019-01-28	

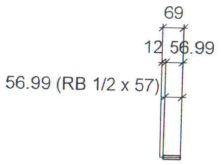

2 - B811 RB 1/2

d=13 b=13 t= w= k=

Grid reference (/), (/)

REGISTERED PROFESSIONAL ENGINEER
NT/NU
28/01/19

Rev.	Date	Par	Description

Projet : WWTP - Main courante Cage Escalier

No. Projet : 0839-ST

Statut :	Commentaire :	
Détaillé par : Moise Harvey	Trou : 13/16"Ø u/n	Client : Kudlik construction ltd
Vérifié par: Jean Trudeau	Soudure : E70XXELECT	No. Dessin : B811
STRUCTURES M.H. inc. ENTREPRENEUR GÉNÉRAL	Acier : A36	
	Peinture: Peint	Sequence : 0
	Date : 2019-01-28	

Marque	Quantité	Description	Longueur	Nuance	Finition	Poids	Poids total
B811	2						
b8024	2	RB 1/2	57.0	A36	Peint	0.125	0.250
	2					0.125	0.250
	2						0.250

Quantité	Description	Longueur	Finition

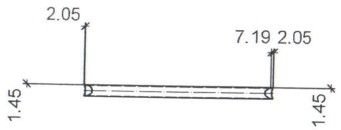



2 - M803 HSS 38X2

d=38 b=38 t= w=2 k=

Grid reference (/), (/)

REGISTERED PROFESSIONAL ENGINEER
NT/NU

Rev.	Date	Par	Description

Projet : WWTP - Main courante Cage Escalier

No. Projet : 0839-ST

Statut :	Commentaire :	
Détaillé par : Moise Harvey	Trou : 13/16"Ø u/n	Client : Kiewit construction ltd
Vérifié par: Jean Trudeau	Soudure : E70XXELECT	No. Dessin : M803
STRUCTURES M.H. inc. ENTREPRENEUR GÉNÉRAL	Acier : G40.21	
	Peinture: Aucun	Sequence : 0
	Date : 2019-01-28	

Marque	Quantité	Description	Longueur	Nuance	Finition	Poids	Poids total
M803	2	Garde-corps sous-lisse escalier					
m8017	2	HSS 38X2	617.1	G40.21		2.405	4.809
	2					2.405	4.809
	2						4.809

Quantité	Description	Longueur	Finition

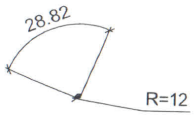

15.68 (RB 1/2 x 29)



2 - M806 RB 1/2

Marque	Quantité	Description	Longueur	Nuance	Finition	Poids	Poids total
M806	2	Coude					
m8012	2	RB 1/2	28.8	G40.21		0.041	0.083
	2					0.041	0.083
	2						0.083

Quantité	Description	Longueur	Finition

REGISTERED PROFESSIONAL ENGINEER
NT/NU

Rev.	Date	Par	Description

Projet : WWTP - Main courante Cage Escalier
No. Projet : 0839-ST

Statut :	Commentaire :	
Détaillé par : Moise Harvey	Trou : 13/16"Ø u/n	Client : Kudlik construction ltd
Vérifié par: Jean Trudeau	Soudure : E70XXELECT	No. Dessin : M806
STRUCTURES M.H. inc. ENTREPRENEUR GÉNÉRAL	Acier : G40.21	
	Peinture: Aucun	Sequence : 0
	Date : 2019-01-28	

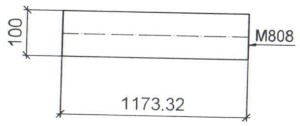

1 - M808 FL100X6

REGISTERED PROFESSIONAL ENGINEER
NT/NU

Rev.	Date	Par	Description

Projet : WWTP - Main courante Cage Escalier

No. Projet : 0839-ST

Statut :	Commentaire :	
Détaillé par : Moise Harvey	Trou : 13/16"Ø u/n	Client : Kiewit construction ltd
Vérifié par: Jean Trudeau	Soudure : E70XXELECT	No. Dessin : M808
STRUCTURES M.H. inc. ENTREPRENEUR GÉNÉRAL	Acier : G40.21	
	Peinture: Aucun	Sequence : 0
	Date : 2019-01-28	

Marque	Quantité	Description	Longueur	Nuance	Finition	Poids	Poids total
M808	1	Garde-corps plinthe palier					
m8034	1	FL100X6	1173.3	G40.21		12.184	12.184
	1					12.184	12.184
	1						12.184

Quantité	Description	Longueur	Finition

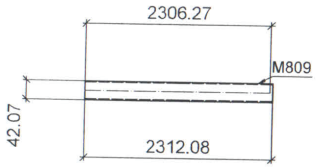

1 - M809 HSS 42X2.6

REGISTERED PROFESSIONAL ENGINEER
NT/NU

Rev.	Date	Par	Description

Projet : WWTP - Main courante Cage Escalier
No. Projet : 0839-ST

Statut :	Commentaire :	
Détaillé par : Moise Harvey	Trou : 13/16"Ø u/n	Client : k construction ltd
Vérifié par: Jean Trudeau	Soudure : E70XXELECT	No. Dessin : M809
STRUCTURES M.H. inc. ENTREPRENEUR GÉNÉRAL	Acier : 350W-CL.C	
	Peinture: Aucun	Sequence : 0
	Date : 2019-01-28	

Marque	Quantité	Description	Longueur	Nuance	Finition	Poids	Poids total
M809	1	Garde-corps main courante escalier					
m8039	1	HSS 42X2.6	2312.1	350W-CL.C		12.806	12.806
	1					12.806	12.806
	1						12.806

Quantité	Description	Longueur	Finition

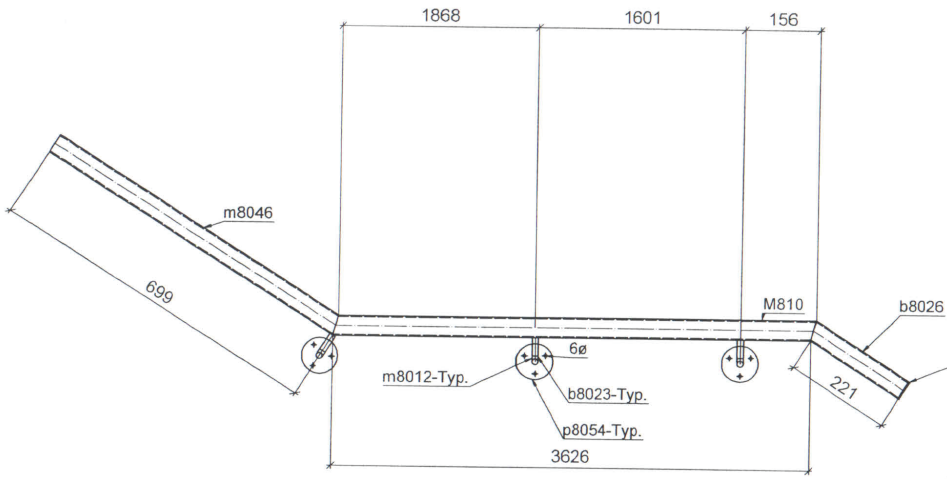

1 - M810 HSS 42X2.6

REGISTERED PROFESSIONAL ENGINEER
NT/NU

Rev.	Date	Par	Description

Projet : WWTP - Main courante Cage Escalier
No. Projet : 0839-ST

Statut :	Commentaire :	
Détaillé par : Moise Harvey	Trou : 13/16"Ø u/n	Client: Kudlik constructn ltd
Vérifié par: Jean Trudeau	Soudure : E70XXELECT	No. Dessin : M810
STRUCTURES M.H. inc ENTREPRENEUR GÉNÉRAL	Acier : 350W-CL.C	
	Peinture: Aucun	Sequence : D
	Date : 2019-01-28	

Marque	Quantité	Description	Longueur	Nuance	Finition	Poids	Poids total
M810	1	Garde-corps main courante escalier					
m8035	1	HSS 42X2.6	3637.9	350W-CL.C		20.149	20.149
m8046	1	HSS 42X2.6	699.0	350W-CL.C		3.871	3.871
b8026	1	HSS 42X2.6	233.1	350W-CL.C		1.291	1.291
p8054	3	PLT6x75x75	75.0	G40.21		0.447	1.341
b8024	3	RB 1/2	57.0	A36	Peint	0.125	0.375
b8023	3	RB 1/2	38.0	A36	Peint	0.083	0.250
p8055	1	PLT3x42.1x42.1	42.1	G40.21		0.070	0.070
m8012	3	RB 1/2	28.8	G40.21		0.041	0.124
	16					27.472	27.472
	16						27.472

Quantité	Description	Longueur	Finition

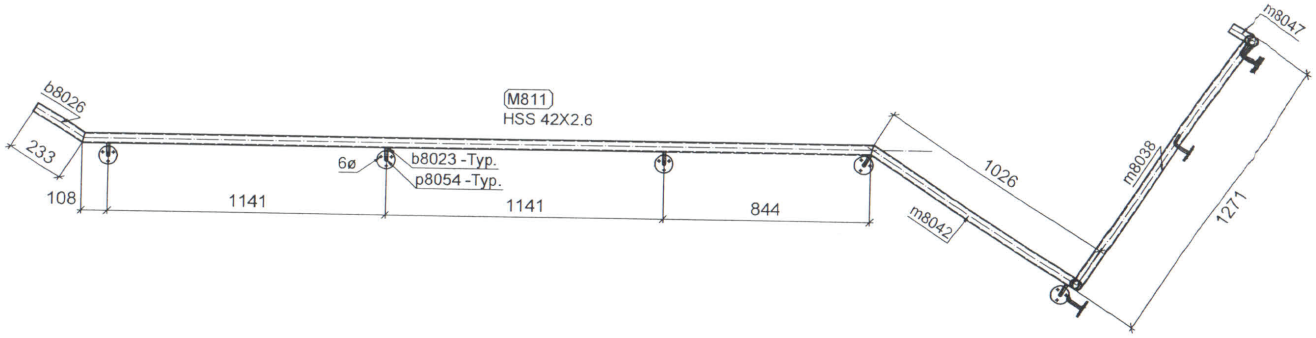

1 - M811 HSS 42X2.6

Marque	Quantité	Description	Longueur	Nuance	Finition	Poids	Poids total
M811	1	Garde-corps main courante escalier					
m8037	1	HSS 42X2.6	3246.0	350W-CL.C		17.978	17.978
m8038	1	HSS 42X2.6	2350.3	350W-CL.C		13.017	13.017
m8041	1	HSS 42X2.6	1058.0	350W-CL.C		5.860	5.860
m8042	1	HSS 42X2.6	1036.2	350W-CL.C		5.739	5.739
m8044	1	HSS 42X2.6	839.8	350W-CL.C		4.651	4.651
b8026	1	HSS 42X2.6	233.1	350W-CL.C		1.291	1.291
m8047	1	HSS 42X2.6	123.1	350W-CL.C		0.682	0.682
p8054	9	PLT6x75x75	75.0	G40.21		0.447	4.023
b8024	9	RB 1/2	57.0	A36	Peint	0.125	1.124
b8023	8	RB 1/2	38.0	A36	Peint	0.083	0.666
p8055	1	PLT3x42.1x42.1	42.1	G40.21		0.070	0.070
m8012	9	RB 1/2	28.8	G40.21		0.041	0.372
	43					55.475	55.475
	43						55.475

Quantité	Description	Longueur	Finition

REGISTERED PROFESSIONAL ENGINEER
NT/NU

Rev.	Date	Par	Description

Projet : WWTP - Main courante Cage Escalier

No. Projet : 0839-ST

Statut :	Commentaire :	
Détaillé par : Moise Harvey	Trou : 13/16"Ø u/n	Client : Cecilix construction ltd
Vérifié par: Jean Trudeau	Soudure : E70XXELECT	No. Dessin : M811
STRUCTURES M.H. inc. ENTREPRENEUR GÉNÉRAL	Acier : 350W-CL.C	
	Peinture: Aucun	Sequence : 0
	Date : 2019-01-28	

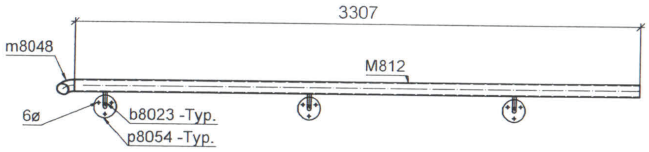

1 - M812 HSS 42X2.6

Marque	Quantité	Description	Longueur	Nuance	Finition	Poids	Poids total
M812	1	Garde-corps main courante escalier					
m8036	1	HSS 42X2.6	3306.7	350W-CL.C		18.314	18.314
p8054	3	PLT6x75x75	75.0	G40.21		0.447	1.341
m8048	1	HSS 42X2.6	76.6	G40.21		0.273	0.273
b8024	3	RB 1/2	57.0	A36	Peint	0.125	0.375
b8023	3	RB 1/2	38.0	A36	Peint	0.083	0.250
m8012	3	RB 1/2	28.8	G40.21		0.041	0.124
	14					20.677	20.677
	14						20.677

Quantité	Description	Longueur	Finition

REGISTERED PROFESSIONAL ENGINEER
NT/NU

Rev.	Date	Par	Description

Projet : WWTP - Main courante Cage Escalier
No. Projet : 0839-ST

Statut :	Commentaire :	
Détaillé par : Moise Harvey	Trou : 13/16"Ø u/n	Client : Ik construction ltd
Vérifié par: Jean Trudeau	Soudure : E70XXELECT	No. Dessin : M812
STRUCTURES M.H. inc. ENTREPRENEUR GÉNÉRAL	Acier : 350W-CL.C	
	Peinture: Aucun	Sequence : 0
	Date : 2019-01-28	

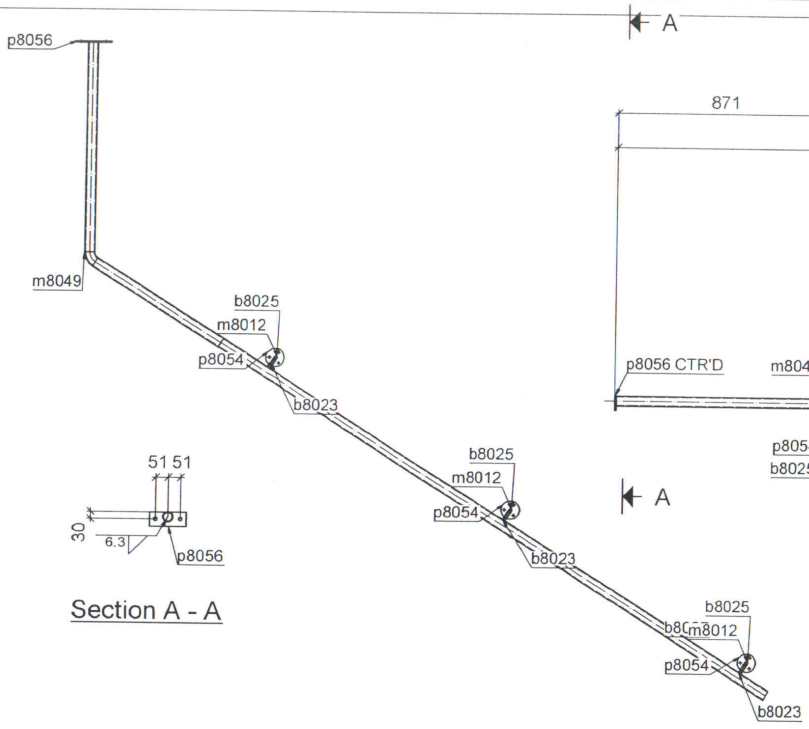

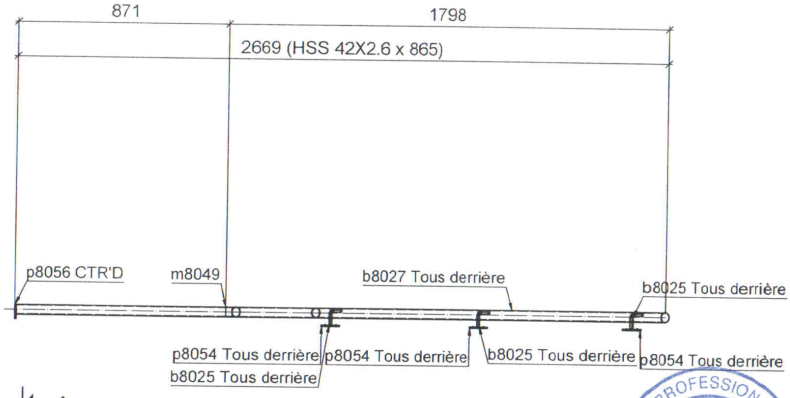

Section A - A

REGISTERED PROFESSIONAL ENGINEER
NT/NU

Rev.	Date	Par	Description

Projet : WWTP - Main courante Cage Escalier

No. Projet : 0839-ST

Marque	Quantité	Description	Longueur	Nuance	Finition	Poids	Poids total
M813	1						
b8027	1	HSS 42X2.6	3280.3	350W-CL.C		18.168	18.168
m8043	1	HSS 42X2.6	865.1	G40.21		4.791	4.791
p8056	1	PLT6x60x150	150.0	G40.21		0.935	0.935
p8054	3	PLT6x75x75	75.0	G40.21		0.447	1.341
m8049	1	HSS 42X2.6	71.5	350W-CL.C		0.279	0.279
b8025	3	RB 1/2	47.0	A36	Peint	0.103	0.309
b8023	3	RB 1/2	38.0	A36	Peint	0.083	0.250
m8012	3	RB 1/2	28.8	G40.21		0.041	0.124
	16					26.197	26.197
	16					26.197	

Quantité	Description	Longueur	Finition
2	12.7ø A325	32	

1 - M813 HSS 42X2.6

d=42 b=42 t= w=3 k=

Grid reference (/)

Statut :		Commentaire :	
Détaillé par : Moise Harvey		Trou : 13/16"Ø u/n	Client : Kudlik construction ltd
Vérifié par: Jean Trudeau		Soudure : E70XXELECT	No. Dessin : M813
STRUCTURES M.H. inc. ENTREPRENEUR GÉNÉRAL		Acier : G40.21	
		Peinture: Aucun	Sequence : 0
		Date : 2019-01-28	

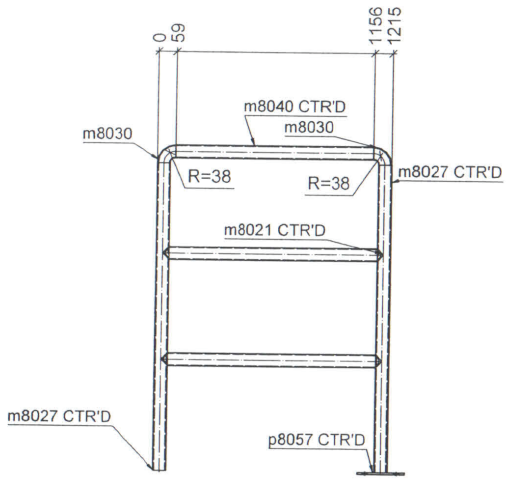

1 - M814 HSS 42X2.6

d=42 b=42 t= w=3 k=

Grid reference (/)

Marque	Quantité	Description	Longueur	Nuance	Finition	Poids	Poids total
M814	1	Garde-corps sous-lisse palier					
m8021	2	HSS 42X2.6	1173.3	G40.21		6.499	12.997
m8040	1	HSS 42X2.6	1097.3	G40.21		6.078	6.078
m8027	2	HSS 42X2.6	1005.0	G40.21		5.566	11.132
p8057	1	PLT6x70x152	152.0	G40.21		1.105	1.105
m8030	2	HSS 42X2.6	92.7	G40.21		0.331	0.661
	8					31.973	31.973
	8					31.973	

Quantité	Description	Longueur	Finition
2	15.9ø A325	51	

REGISTERED PROFESSIONAL ENGINEER
NT/NU

Rev.	Date	Par	Description

Projet : WWTP - Main courante Cage Escalier

No. Projet : 0839-ST

Statut :

Commentaire :

Détaillé par : Moise Harvey

Trou : 13/16"Ø u/n

Client : kullik construction

Vérifié par: Jean Trudeau

Soudure : E70XXELECT

No. Dessin : M814

STRUCTURES M.H. inc. ENTREPRENEUR GÉNÉRAL

Acier : G40.21

Peinture: Aucun

Date : 2019-01-28

Sequence : 0

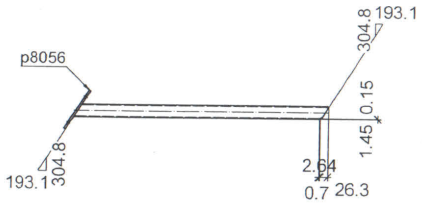

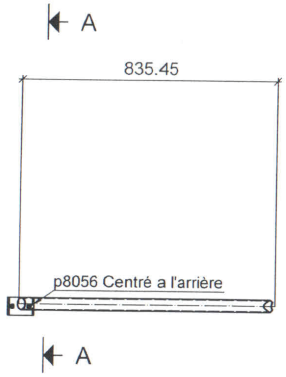



Section A - A

1 - M815 HSS 42X2.6

d=42 b=42 t= w=3 k=

Grid reference (/)

Marque	Quantité	Description	Longueur	Nuance	Finition	Poids	Poids total
M815	1	Garde-corps montant escalier					
m8045	1	HSS 42X2.6	835.4	G40.21		4.627	4.627
p8056	1	PLT6x60x150	150.0	G40.21		0.935	0.935
	2					5.562	5.562
	2					5.562	5.562

Quantité	Description	Longueur	Finition
2	12.7ø A325	44	

REGISTERED PROFESSIONAL ENGINEER
NT/NU

Rev.	Date	Par	Description

Projet : WWTP - Main courante Cage Escalier

No. Projet : 0839-ST

Statut :

Commentaire :

Détaillé par : Moise Harvey

Trou : 13/16"Ø u/n

Client : [illegible] construction ltd

Vérifié par: Jean Trudeau

Soudure : E70XXELECT

No. Dessin : M815

STRUCTURES M.H. inc. ENTREPRENEUR GÉNÉRAL

Acier : G40.21

Peinture: Aucun

Date : 2019-01-28

Sequence : 0

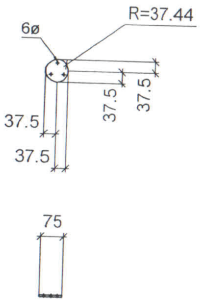

2 - P801 PLT6x75x75

Marque	Quantité	Description	Longueur	Nuance	Finition	Poids	Poids total
P801	2						
p8054	2	PLT6x75x75	75.0	G40.21		0.447	0.894
	2					0.447	0.894
	2						0.894

Quantité	Description	Longueur	Finition

REGISTERED PROFESSIONAL ENGINEER
NT/NU

Rev.	Date	Par	Description

Projet : WWTP - Main courante Cage Escalier
No. Projet : 0839-ST

Statut :	Commentaire :	
Détaillé par : Moise Harvey	Trou : 13/16"Ø u/n	Client : [illegible] construction ltd
Vérifié par: Jean Trudeau	Soudure : E70XXELECT	No. Dessin : P801
STRUCTURES M.H. inc. ENTREPRENEUR GÉNÉRAL	Acier : G40.21	
	Peinture: Aucun	Sequence : 0
	Date : 2019-01-28	

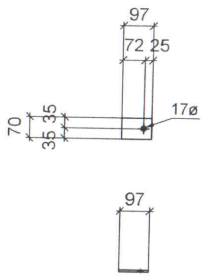

1 - P802 PLT6x70x97

REGISTERED PROFESSIONAL ENGINEER
TRUDEAU
NT/NU

Rev.	Date	Par	Description

Projet : WWTP - Main courante Cage Escalier

No. Projet : 0839-ST

Statut :	Commentaire :	
Détaillé par : Moise Harvey	Trou : 13/16"Ø u/n	Client : Kiddik construction ltd
Vérifié par: Jean Trudeau	Soudure : E70XXELECT	No. Dessin : P802
STRUCTURES M.H. inc. ENTREPRENEUR GÉNÉRAL	Acier : G40.21	
	Peinture: Aucun	Sequence : 0
	Date : 2019-01-28	

Marque	Quantité	Description	Longueur	Nuance	Finition	Poids	Poids total
P802	1	Platine d'extrémité					
p8058	1	PLT6x70x97	97.0	G40.21		0.705	0.705
	1					0.705	0.705
	1						0.705

Quantité	Description	Longueur	Finition
1	15.9ø A325	51	

SUBMITTALS IDENTIFICATION SHEET

PROJECT: Wastewater Treatment Plant Upgrade
Iqaluit, Nunavut

NUNAMI
STANTEC LIMITED

1088C Noble House
Iqaluit NU
www.stantec.com

CONTRACTOR: Kudlik Construction Ltd, Project 2018-062

Telephone: 867-979-1166

E-mail: srousseau@kudlik.biz

SUBCONTRACTOR: Structure MH

Person responsible: Moise Harvey

Telephone: (418)487-8772 E-mail: structures.mh@gmail.com

PRODUCT SUBMITTED:

☑ As Specified

☐ Alternate

SUPPLIER or MANUFACTURER:

Person responsible:

Telephone: E-mail:

DESCRIPTION OF SUBMITTAL:

# of pages:

Reference to drawings:

Reference to specs:

Division: 05 Section: 05 12 23 - 05 21 00

REMARKS:

Checker plate Door D200.1

REVIEW AND COMMENTS (for use by Consultants):

STANTEC PROJECT #: 110126045

SUBMITTAL # STC-21 checker plate soor D200.1

This review by Stantec is for general conformance with the design concept of Stantec's design of the:

☑ Architectural ☐ Electrical
☐ Structural ☐ Other
☐ Mechanical

component(s) only and does not mean that Stantec has verified or approves the shop drawing(s). The Contractor remains solely responsible for the shop drawing(s) and this review by Stantec does not relieve the Contractor of the Contractor's responsibility for errors or omissions in the shop drawing(s) or for meeting all requirements of the contract documents. This review does not mean that Stantec approves the detailed design inherent in the shop drawing, responsibility for which shall remain with the Contractor submitting same, nor does this review mean that Stantec accepts any deviation of the shop drawing(s) from the contract documents. The Contractor is responsible for confirming all dimensions and correlating them at the job site, for all construction means, methods and techniques, and for coordination of construction work of all trades, including coordination of all shop drawings.

Stantec

☑ REVIEWED

☐ REVIEWED, AS NOTED

☐ REVISE AND RESUBMIT

☐ NOT REVIEWED

DATE 2019-02-19

BY TFlender

Review of this submission is for compliance with general intent of the contract. This review does not relieve the Sub-Contractor, Supplier or Manufacturer of responsibility for error or omissions in the submission or the responsibility of meeting all requirements of the contract documents. Any deviation from the contract documents initiated by the Sub-Contractor, Supplier or Manufacturer shall be at their sole risk. QUANTITIES AND DETAIL DIMENSIONS ARE THE SUB-CONTRACTORS OR SUPPLIERS RESPONSIBILITY. VERIFY DATA WITH FIELD DIMENSIONS.

SUBMITTAL TRACKING No.: **STC-021**

2019-01-30

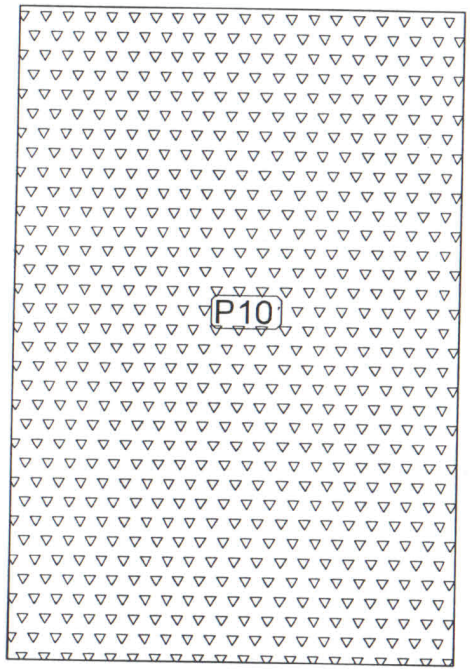

Door D200.1

REGISTERED PROFESSIONAL ENGINEER
NT/NU
25/01/19

Plan view - Gratings
Aluminum door sill 3/16

Rev.	Date	Par	Description

Projet : WWTP-Aluminum door sill
No. Projet : MH.2018.0839

Statut :	Commentaire :	
Détaillé par : Julie Lajoie	Trou : 13/16"Ø u/n	Client : Const Gely
Vérifié par: Jean Trudeau	Soudure : E70XXELECT	No. Dessin : MT-10
STRUCTURES M.H. inc. ENTREPRENEUR GÉNÉRAL	Acier : A-1011	
	Peinture: Aucun	Sequence : 0
	Date : 2019-01-17	

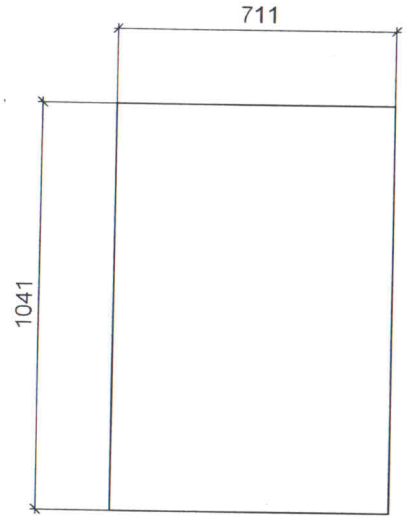

1 - P10 Tôle striée 3/16" - 711x1041

Marque	Quantité	Description	Longueur	Nuance	Finition	Poids	Poids total
P10	1	Tôle surface					
p100	1	Tôle striée 3/16" - 711x1041	711.0	A-1011		69.306	69.306
	1					69.306	69.306
	1						69.306

Quantité	Description	Longueur	Finition

REGISTERED PROFESSIONAL ENGINEER
25/01/19
NT/NU

Rev.	Date	Par	Description

Projet : WWTP-Aluminum door sill

No. Projet : MH.2018.0839

Statut :	Commentaire :	
Détaillé par : Julie Lajoie	Trou : 13/16"Ø u/n	Client : Const Gely
Vérifié par: Jean Trudeau	Soudure : E70XXELECT	No. Dessin : P10
STRUCTURES M.H. inc. ENTREPRENEUR GÉNÉRAL	Acier : A-1011	
	Peinture: Aucun	Sequence : 0
	Date : 2019-01-17	

SUBMITTALS IDENTIFICATION SHEET

PROJECT: Wastewater Treatment Plant Upgrade
Iqaluit, Nunavut

NUNAMI
STANTEC LIMITED
1088C Noble House
Iqaluit NU
www.stantec.com

CONTRACTOR: Kudlik Construction Ltd, Project 2018-062

Telephone: 867-979-1166

E-mail: srousseau@kudlik.biz

SUBCONTRACTOR: Structure MH

Person responsible: Moise Harvey

Telephone: (418)487-8772 E-mail: structures.mh@gmail.com

PRODUCT SUBMITTED:

☑ As Specified

☐ Alternate

SUPPLIER or MANUFACTURER:

Person responsible:

Telephone: E-mail:

DESCRIPTION OF SUBMITTAL:

# of pages:

Reference to drawings:

Reference to specs:

Division: 05 Section: 05 12 23 - 05 21 00

REMARKS:

Screen plateform railing and ladder

REVIEW AND COMMENTS (for use by Consultants):

STANTEC PROJECT #: 110126045

SUBMITTAL # STC-022 platform railing and ladder

This review by Stantec is for general conformance with the design concept of Stantec's design of the:

☑ Architectural ☐ Electrical
☐ Structural ☐ Other
☐ Mechanical

component(s) only and does not mean that Stantec has verified or approves the shop drawing(s). The Contractor remains solely responsible for the shop drawing(s) and this review by Stantec does not relieve the Contractor of the Contractor's responsibility for errors or omissions in the shop drawing(s) or for meeting all requirements of the contract documents. This review does not mean that Stantec approves the detailed design inherent in the shop drawing, responsibility for which shall remain with the Contractor submitting same, nor does this review mean that Stantec accepts any deviation of the shop drawing(s) from the contract documents. The Contractor is responsible for confirming all dimensions and correlating them at the job site, for all construction means, methods and techniques, and for coordination of construction work of all trades, including coordination of all shop drawings.

Stantec

☐ REVIEWED
☑ REVIEWED, AS NOTED
☐ REVISE AND RESUBMIT
☐ NOT REVIEWED

DATE 2019-04-09

BY TFlender

Note:
this review is for the railing only.
Ladder is missing.

Review of this submission is for compliance with general intent of the contract. This review does not relieve the Sub-Contractor, Supplier or Manufacturer of responsibility for error or omissions in the submission or the responsibility of meeting all requirements of the contract documents. Any deviation from the contract documents initiated by the Sub-Contractor, Supplier or Manufacturer shall be at their sole risk. QUANTITIES AND DETAIL DIMENSIONS ARE THE SUB-CONTRACTORS OR SUPPLIERS RESPONSIBILITY. VERIFY DATA WITH FIELD DIMENSIONS.

SUBMITTAL TRACKING No.: **STC-022**

2019-02-20

GALVANIZED STEEL GUARD
RAIL 1070mm HEIGHT
ABOVE GRATING

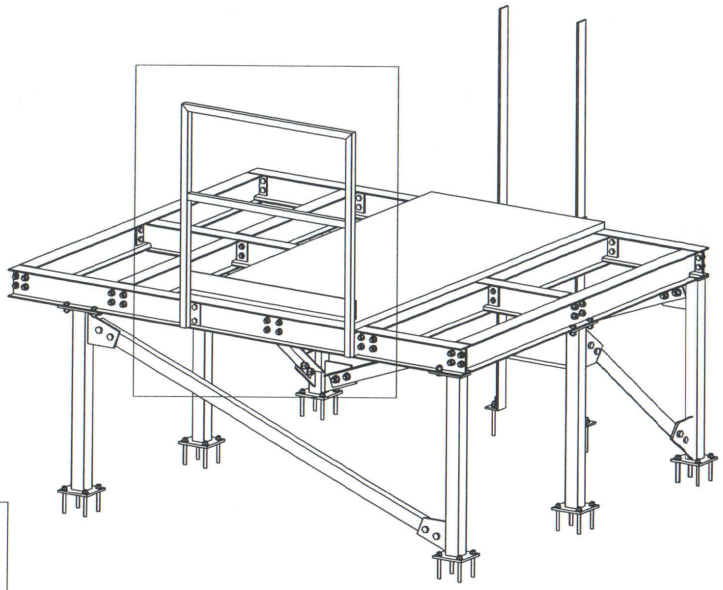

3D view

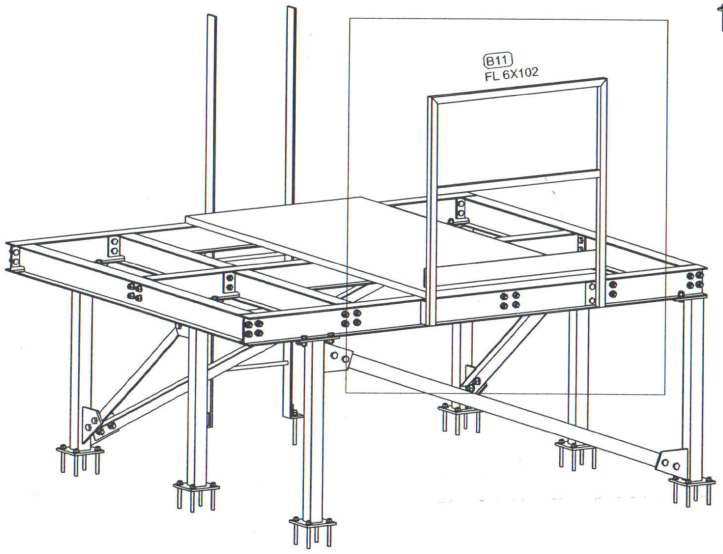

3D view

REGISTERED PROFESSIONAL ENGINEER
NT/NU
19/02/19

CWB
certificationcwb
CSA W47.1

ALL WELDING
PLAN AND WHAT
WERE MADE
SOUS ALL COMPLIES
CWB

Rev.	Date	Par	Description

Projet :
Screen Platform (Iqaluit Wastewater)
No. Projet : MH.2018.0839_ST

Statut Révisé	Commentaire :	
Détaillé par : Julie Lajoie	Trou : 13/16"Ø u/n	Client : Const. Gely
Vérifié par: Const. Gely	Soudure : E70XXELECT	No. Dessin : 0
STRUCTURES M.H. inc. ENTREPRENEUR GÉNÉRAL	Acier : 300W,350W,350W-CL,C-A-1001,A36,A500 GR.B,G40.21	
	Peinture: Aucun,Galvanisé	Sequence : 0
	Date : 2019-02-19	

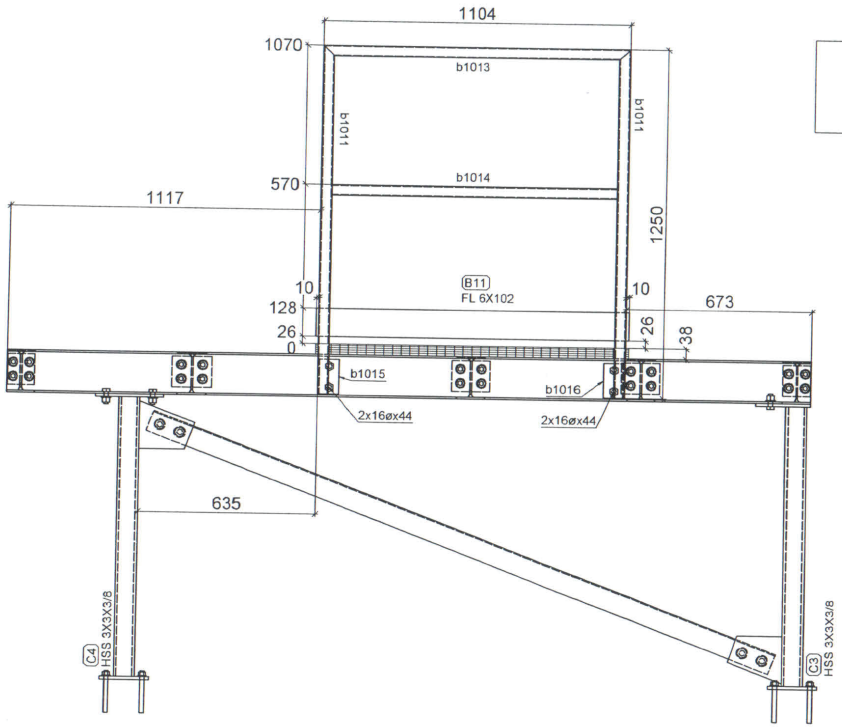

Elevation

GALVANIZED STEEL GUARD
RAIL 1070mm HEIGHT
ABOVE GRATING

ALL WELDING
PLAN AND WHAT
WERE MADE
SOUS ALL COMPLIES
CWB

REGISTERED PROFESSIONAL ENGINEER
NT/NU

Rev.	Date	Par	Description

Projet : Screen Platform (Iqaluit Wastewater)

No. Projet : MH.2018.0839_ST

Statut: Révisé	Commentaire :	
Détaillé par : Julie Lajoie	Trou : 13/16"Ø u/n	Client : Const. Gely
Vérifié par: Const. Gely	Soudure : E70XXELECT	No. Dessin : 211
	Acier : 300W,350W,350W-CL.C,A500 GR.B,C40.21	
	Peinture: Aucun,Galvanisé	Sequence : 0
	Date : 2019-02-19	

GALVANIZED STEEL GUARD
RAIL 1070mm HEIGHT
ABOVE GRATING

Marque	Quantité	Description	Longueur	Nuance	Finition	Poids	Poids total
B11	1						
b1012	1	FL 6X102	1124.0	300W	Galvanisé	12.550	12.550
b1011	2	HSS 38.1X38.1X3.18	1250.5	G40.21	Galvanisé	9.098	18.195
b1013	1	HSS 38.1X38.1X3.18	1104.0	350W-CL.C	Galvanisé	8.032	8.032
b1014	1	HSS 38.1X38.1X3.18	1027.8	350W-CL.C	Galvanisé	7.477	7.477
b1015	1	L76X51X6.4	125.0	300W	Galvanisé	1.653	1.653
b1016	1	L76X51X6.4	125.0	300W	Galvanisé	1.653	1.653
	7					49.562	49.562
	7						49.562

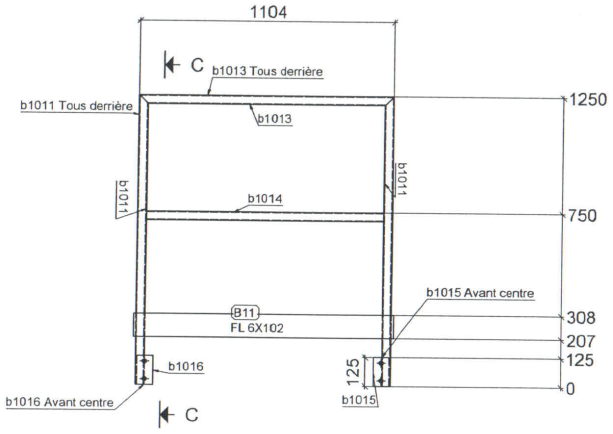

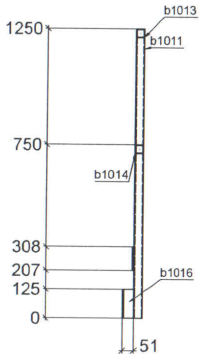

Section C - C

1 - B11 FL 6X102
d=102 b=6 t=0 w=6 k=0
Grid reference (A-B/1-2)

ALL WELDING
PLAN AND WHAT
WERE MADE
SOUS ALL COMPLIES
CWB

Rev.	Date	Par	Description

Projet : Screen Platform (Iqaluit Wastewater)
No. Projet : MH.2018.0839_ST

Statut : Révisé	Commentaire :	
Détaillé par : Julie Lajoie	Trou : 13/16"Ø u/n	Client : Const Gely
Vérifié par: Const. Gely	Soudure : E70XXELECT	No. Dessin : B11
	Acier : 300W	
	Peinture : Galvanisé	Sequence : 0
	Date : 2019-02-19	

REGISTERED PROFESSIONAL ENGINEER
NT/NU

SUBMITTALS IDENTIFICATION SHEET

PROJECT: Wastewater Treatment Plant Upgrade
Iqaluit, Nunavut

NUNAMI
STANTEC LIMITED
1088C Noble House
Iqaluit NU
www.stantec.com

CONTRACTOR: Kudlik Construction Ltd, Project 2018-062

Telephone: 867-979-1166

E-mail: srousseau@kudlik.biz

SUBCONTRACTOR: Structure MH

Person responsible: Moise Harvey

Telephone: (418)487-8772 E-mail: structures.mh@gmail.com

PRODUCT SUBMITTED:

☑ As Specified

☐ Alternate

SUPPLIER or MANUFACTURER:

Person responsible:

Telephone: E-mail:

DESCRIPTION OF SUBMITTAL:

# of pages:

Reference to drawings:

Reference to specs:

Division: 05 Section: 05 12 23 - 05 21 00

REMARKS:

~~Screen plateform railing and~~ ladder

REVIEW AND COMMENTS (for use by Consultants):

STANTEC PROJECT #: 110126045

SUBMITTAL # STC-026 steel ladder

This review by Stantec is for general conformance with the design concept of Stantec's design of the:

☑ Architectural ☐ Electrical
☐ Structural ☐ Other
☐ Mechanical

component(s) only and does not mean that Stantec has verified or approves the shop drawing(s). The Contractor remains solely responsible for the shop drawing(s) and this review by Stantec does not relieve the Contractor of the Contractor's responsibility for errors or omissions in the shop drawing(s) or for meeting all requirements of the contract documents. This review does not mean that Stantec approves the detailed design inherent in the shop drawing, responsibility for which shall remain with the Contractor submitting same, nor does this review mean that Stantec accepts any deviation of the shop drawing(s) from the contract documents. The Contractor is responsible for confirming all dimensions and correlating them at the job site, for all construction means, methods and techniques, and for coordination of construction work of all trades, including coordination of all shop drawings.

Stantec

☐ REVIEWED

☑ REVIEWED, AS NOTED

☐ REVISE AND RESUBMIT

☐ NOT REVIEWED

DATE 2019-04-18

BY TFlender

Review of this submission is for compliance with general intent of the contract. This review does not relieve the Sub-Contractor, Supplier or Manufacturer of responsibility for error or omissions in the submission or the responsibility of meeting all requirements of the contract documents. Any deviation from the contract documents initiated by the Sub-Contractor, Supplier or Manufacturer shall be at their sole risk. QUANTITIES AND DETAIL DIMENSIONS ARE THE SUB-CONTRACTORS OR SUPPLIERS RESPONSIBILITY. VERIFY DATA WITH FIELD DIMENSIONS.

SUBMITTAL TRACKING No.: STC-026

2019-04-10

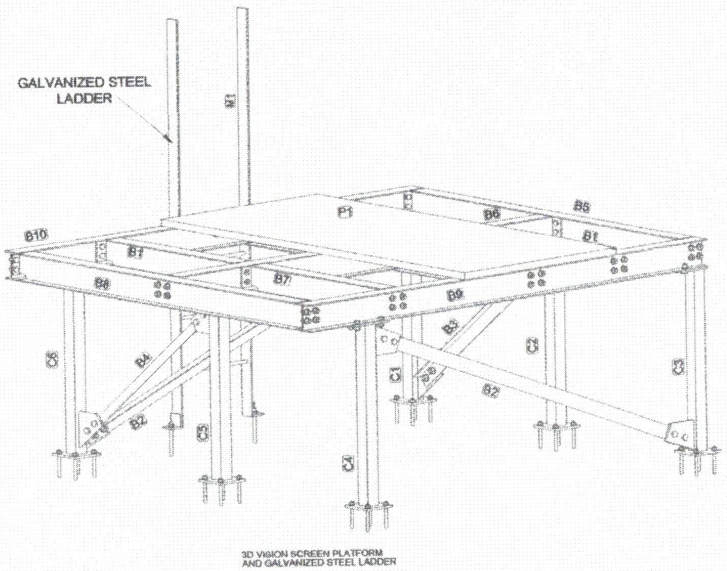

3D VISION SCREEN PLATFORM
AND GALVANIZED STEEL LADDER

provide return to connect to railing as per arch.

ensure construction to be code compliant

refer to arch drawings 1/A703 & 2/A703

rungs max 300mm o.c.

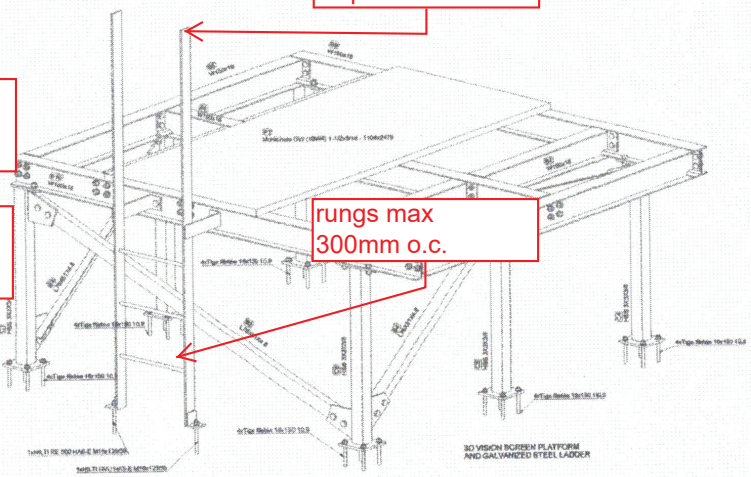

3D VISION SCREEN PLATFORM
AND GALVANIZED STEEL LADDER

PROJET :
IQALUIT WASTEWATER TREATMENT PLANT UPGRADE

ANCRAGE TYPIQUE :

TYPICAL COLUMN :
HSS 3½ X 3½ X 3/16

REGISTERED PROFESSIONAL ENGINEER
LICENSEE
NT/NU

ALL WELDING PLAN AND WHAT WERE MADE SOUS ALL COMPLIES CWB

Rev	Date	Par	Description
TQ C	2018-11-26	Julie Lajoie	Tel que construit

STRUCTURES M.H. inc.
ENTREPRENEUR GÉNÉRAL

Date : 2018-09-30
INGÉNIEUR : Const. Gely

Client : Const. Gely
Projet : Screen Platform (Iqaluit Wastewater)
No. Projet : MH_2018.0839_ST
Dessiné par : Julie Lajoie
TITRE : Screen Platform (Iqaluit - Wastewater)
3D VISION SCREEN PLATFORM AND GALVANIZED STEEL LADDER

ST00

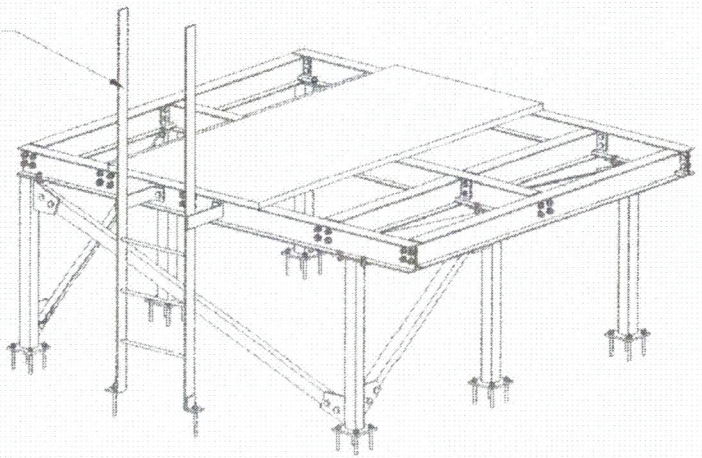

3D VIEW

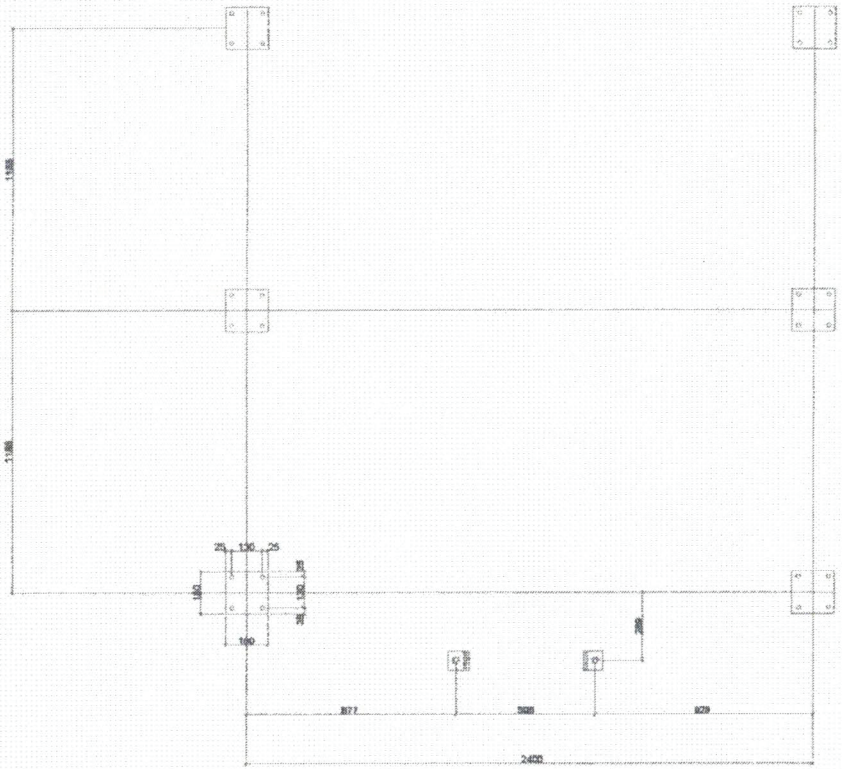

PROJET :

IQALUIT WASTEWATER TREATMENT PLANT UPGRADE

ANCRAGE TYPIQUE :
-4x HILTI HSA M16X150/25/45 on base plate

TYPICAL COLUMN :
HSS 3½ X 3½ X 3/16

REGISTERED PROFESSIONAL ENGINEER
J. TREMBLAY
LICENSEE
NT/NU

ALL WELDING PLAN AND WHAT WERE MADE SOUS ALL COMPLIES CWB

Rev.	Date	Par	Description
REV-A	2018-08-20	Julie Lajoie	Correction apporter tel que demander en date du 8 août 2018
TQC	2018-11-26	Julie lajoie	Tel que construit.

STRUCTURES M.H. inc.
ENTREPRENEUR GÉNÉRAL
[illegible]

Date : 2018-12-13

INGÉNIEUR :

Client :
KUDLIK CONSTRUCTION

Projet :
Screen Platform (Iqaluit Wastewater)

No. Projet :
MH.2018.0830_ST

Dessiné par :
Julie Lajoie

TITRE :
Plan view of
Base plates and the base of the ladder

No. Dessin
STD1

Révision
TQC

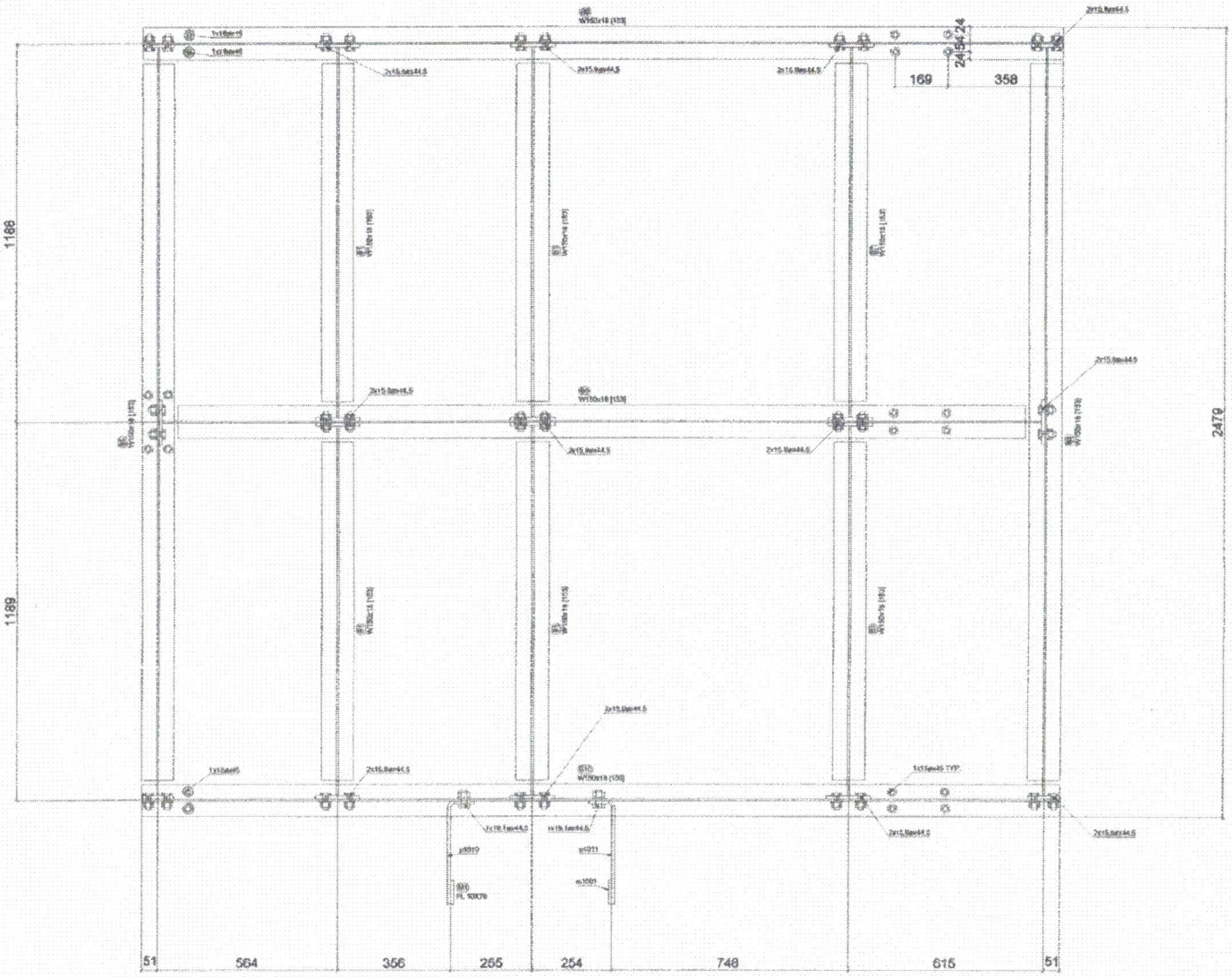

Plan view Above Beams

PROJET :

IQALUIT WASTEWATER TREATMENT PLANT UPGRADE

ANCRAGE TYPIQUE :
-4x HILTI HBA M16X190/25/45 on base plate

TYPICAL COLUMN :
HSS 3/16 X 8½ X 3/16

REGISTERED PROFESSIONAL ENGINEER
J. TREMBLAY
LICENSEE
NT/NU

ALL WELDING PLAN AND WHAT WERE MADE SOUS ALL COMPLIES CWB

Rev.	Date	Par	Description
REV-A	2018-08-20	Julie Lajoie	Correction apporter tel que demander en date du 8 août 2018
TQC	2018-11-26	Julie lajoie	Tel que construit.

STRUCTURES M.H. inc.
ENTREPRENEUR GÉNÉRAL

Date : 2018-08-20

INGÉNIEUR : Const Gely

Client :
Const. Gely

Projet :
Screen Platform (Iqaluit Wastewater)

No. Projet :
MH.2016.0830_ST

Dessiné par :
Julie Lajoie

TITRE :
Screen Platform
(Iqaluit - Wastewater)
Above Beams

No. Dessin :
ST02

Échelle :

TQC

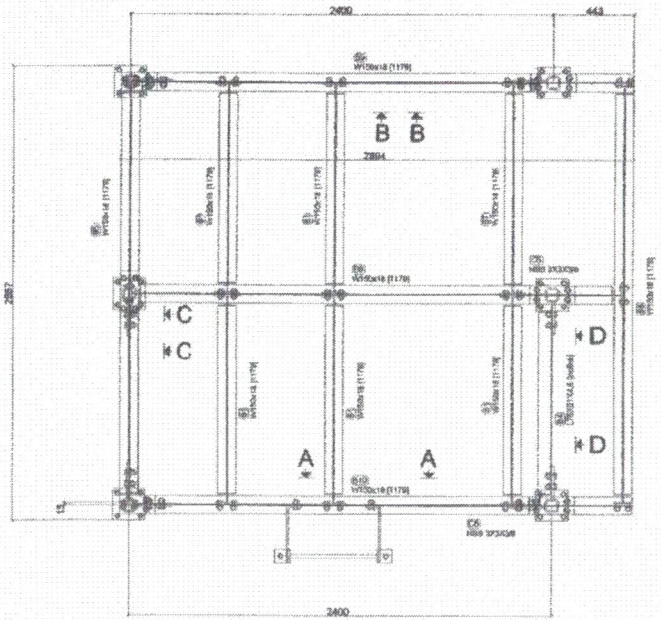

Plan view

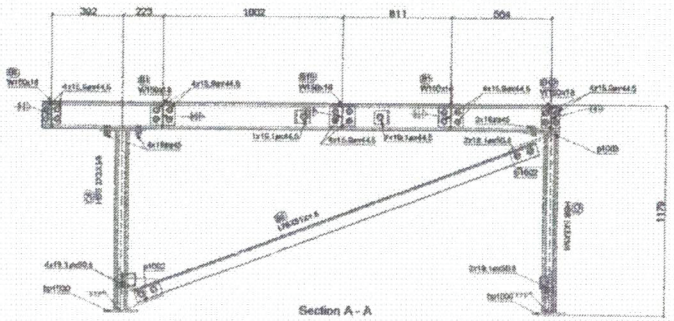

Section A - A

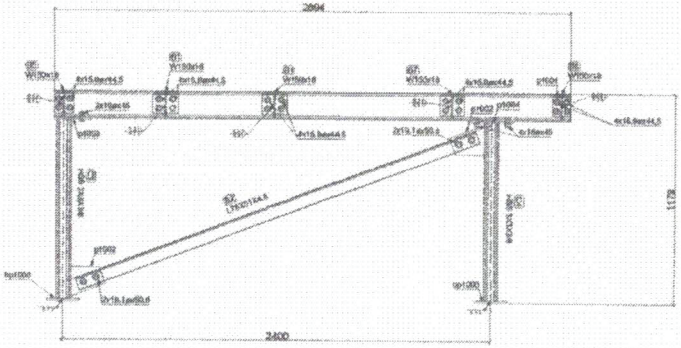

Section B - B

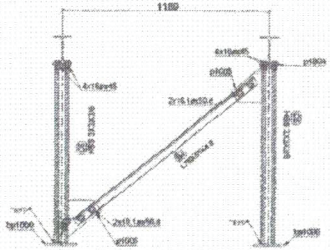

Section D - D

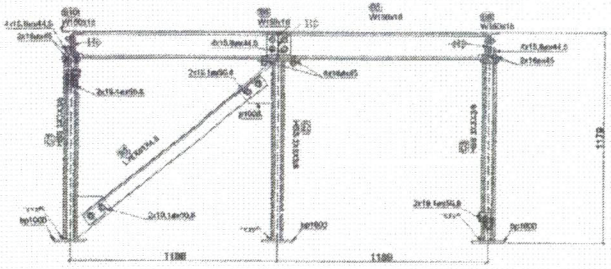

Section C - C

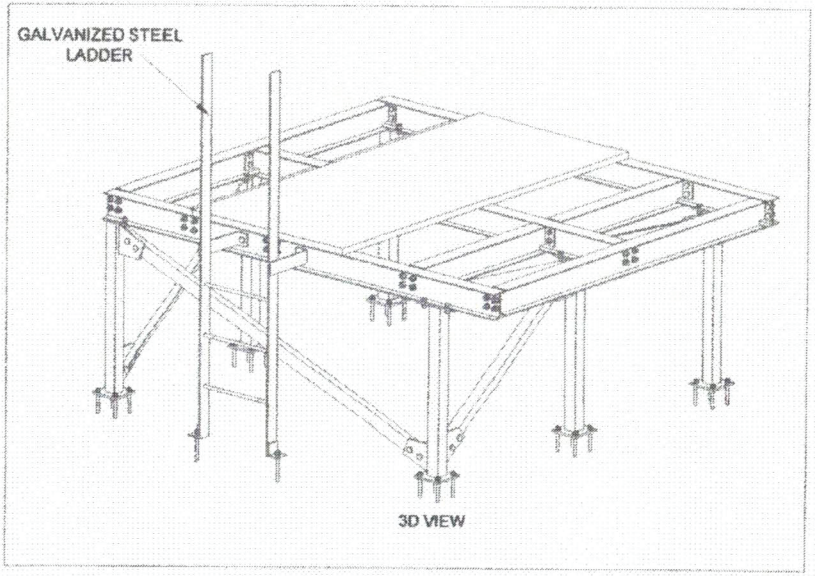

3D VIEW

PROJET :

IQALUIT WASTEWATER TREATMENT PLANT UPGRADE

ANCRAGE TYPIQUE :
-4x HILTI HSA M16X150/25/45 on base plate

TYPICAL COLUMN :
HSS 3½ X 3½ X 3/16

REGISTERED PROFESSIONAL ENGINEER
PRUDEAU
LICENSEE
NT/NU
2015/2/15

ALL WELDING PLAN AND WHAT WERE MADE SOUS ALL COMPLIES CWB

Rev.	Date	Par	Description
REV-A	2018-08-20	Julie Lajoie	Correction apporter tel que demander en date du 8 août 2018
TQC	2018-11-26	Julie lajoie	Tel que construit.

STRUCTURES M.H. inc.
ENTREPRENEUR GÉNÉRAL

Date : 2018-06-26

INGÉNIEUR : Const. Gely

Client : Const. Gely

Projet : Screen Platform (Iqaluit Wastewater)

No. Projet : MH.2018.0839_ST

Détaillé par : Julie Lajoie

TITRE : Sectional View

No. Dessin : ST03

TQC

Marque	Quantité	Description	Longueur	Nuance	Finition	Poids	Poids total
P1	1	Calliebois					
p1009	1	McNichols GW (19W4) 1-1/2x3/16 - 1104x2479		A-1001	Galvanisé	318.128	318.128
	1					318.128	318.128
	1						318.128

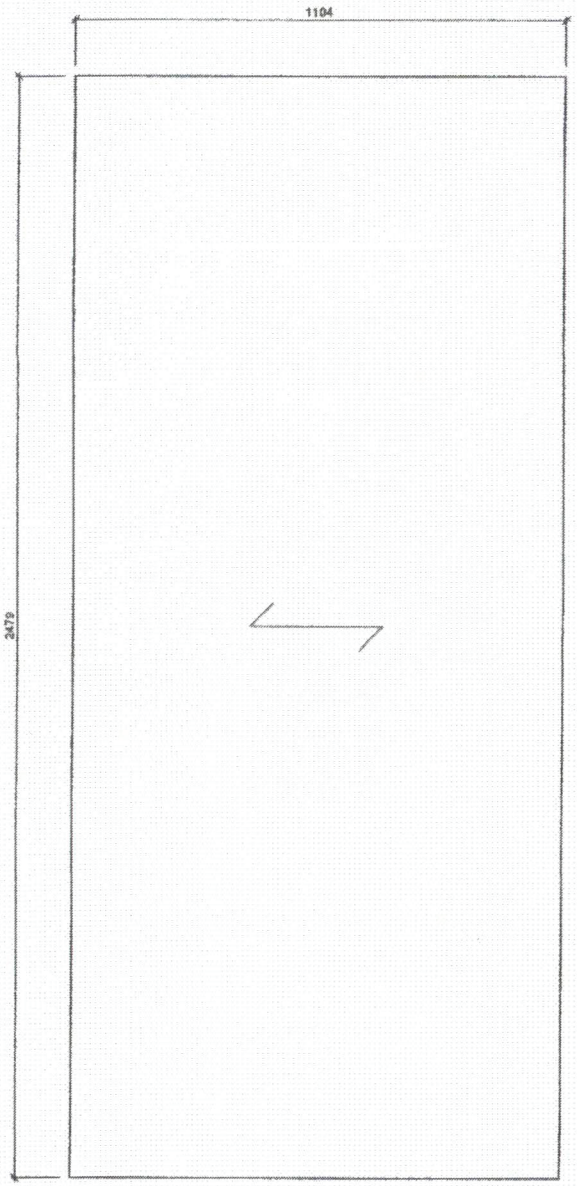

1 - P1 McNichols GW (19W4) 1-1/2x3/16 - 1104x2479

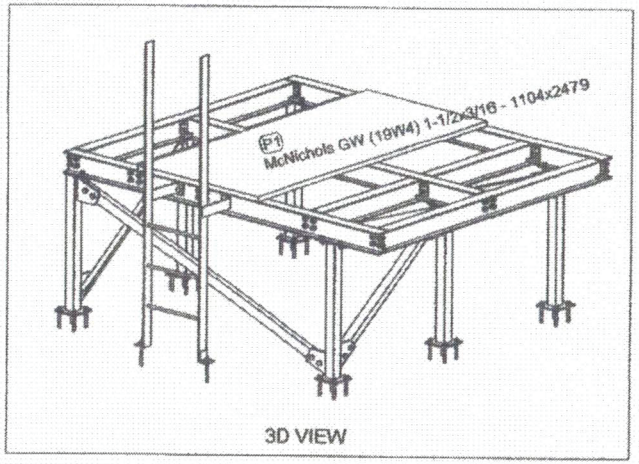

3D VIEW

ALL WELDING PLAN AND WHAT WERE MADE SOUS ALL COMPLIES CWB

Rev.	Date	Par	Description
REV-A	2018-08-20	Julie Lajoie	Correction apporter tel que demander en date du 8 août 2018
TQC	2018-11-26	Julie lajoie	Tel que construit.

Projet : Screen Platform (Iqaluit Wastewater)

No. Projet : MH.2018.0039_ST

Statut : Non défini	Commentaire :		
Détaillé par : Julie Lajoie	Trou : 13/16"Ø u/n	Client : Const. Gely	
Vérifié par: Const. Gely	Soudure : E70XXELECT	No. Dessin : P1	
	Acier : A-1001		
	Peinture : Galvanisé	Sequence : TQC	
	Date : 2018-08-20		

REGISTERED PROFESSIONAL ENGINEER
LICENSEE
NT/NU

Marque	Quantité	Description	Longueur	Nuance	Finition	Poids	Poids total
M1	1	Échelle profil					
m1001	2	FL 10X76	2249.0	G40.21	Galvanisé	28.250	56.499
p1010	1	PLT10x75x304.2	304.2	G40.21	Galvanisé	5.036	5.036
p1011	1	PLT10x75x388	388.0	G40.21	Galvanisé	5.036	5.036
m1000	3	O 20.00	490.5	G40.21	Galvanisé	2.867	8.600
b1010	2	L3X3X3/8	76.2	A36	Galvanisé	1.800	3.600
	9					78.172	78.172
	9						78.172

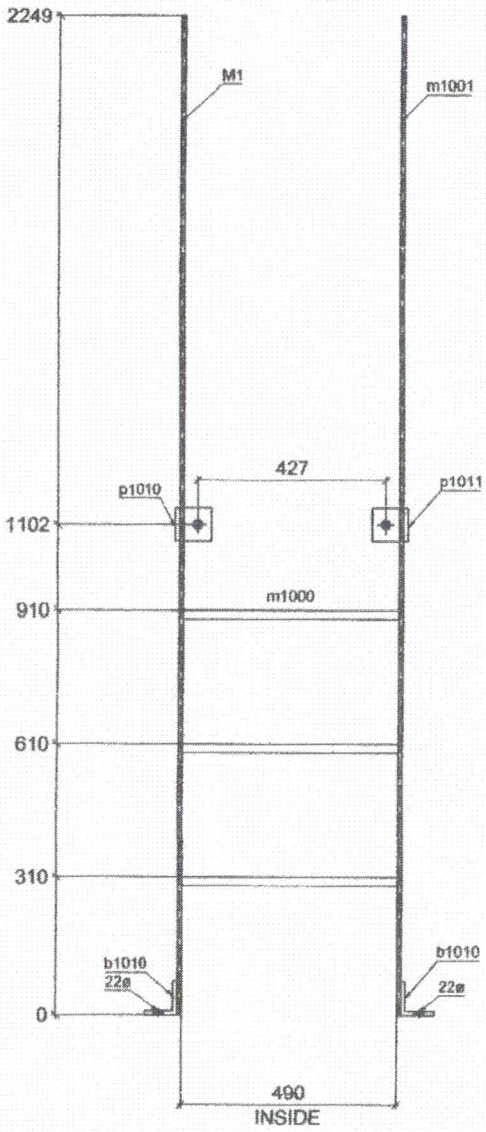

1 - M1 FL 10X76

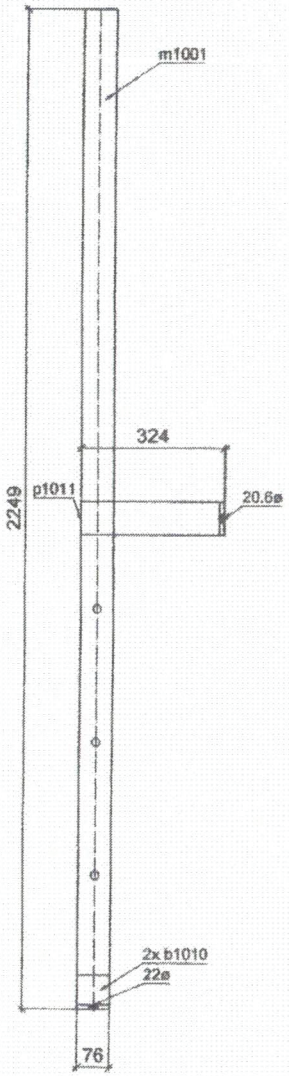

M1
FL 10X76

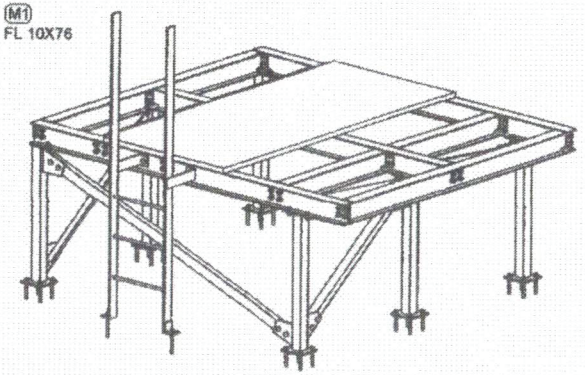

3D VIEW

ALL WELDING PLAN AND WHAT WERE MADE SOUS ALL COMPLIES CWB

Rev.	Date	Par	Description

Projet : Screen Platform (Iqaluit Wastewater)

No. Projet : MH.2018.0639_ST

Statut :	Commentaire :	
Détaillé par : Julie Lajoie	Trou : 13/16"Ø o/n	Client : KUDLIK CONTS.
Vérifié par: Const. Kudlik	Soudure : E70XXELECT	No. Dessin : M1
STRUCTURES M.H. inc.	Acier : 300W,350W,A-1001,A36,A500GR.B,G40.21	
	Peinture : Aucun,Galvanisé	Sequence 0
	Date : 2018-12-13	

REGISTERED PROFESSIONAL ENGINEER
NT/NU
LICENSEE

Marque	Quantité	Description	Longueur	Nuance	Finition	Poids	Poids total
C6	1	Poteau					
c1000	1	HSS 3X3X3/8	1004.0	A500 GR.B	Galvanisé	40.063	40.063
bp1000	1	PLT12x180x180	180.0	G40.21		6.729	6.729
p1002	1	PLT12.7x159.1x212.9	212.9	G40.21		5.433	5.433
p1005	1	PLT12.7x160.9x234.1	234.1	G40.21		5.049	5.049
p1006	1	PLT10x102x250	250.0	G40.21		4.413	4.413
	5					61.687	61.687
	5						61.687

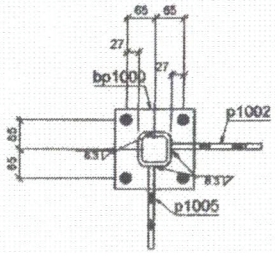

Section B - B

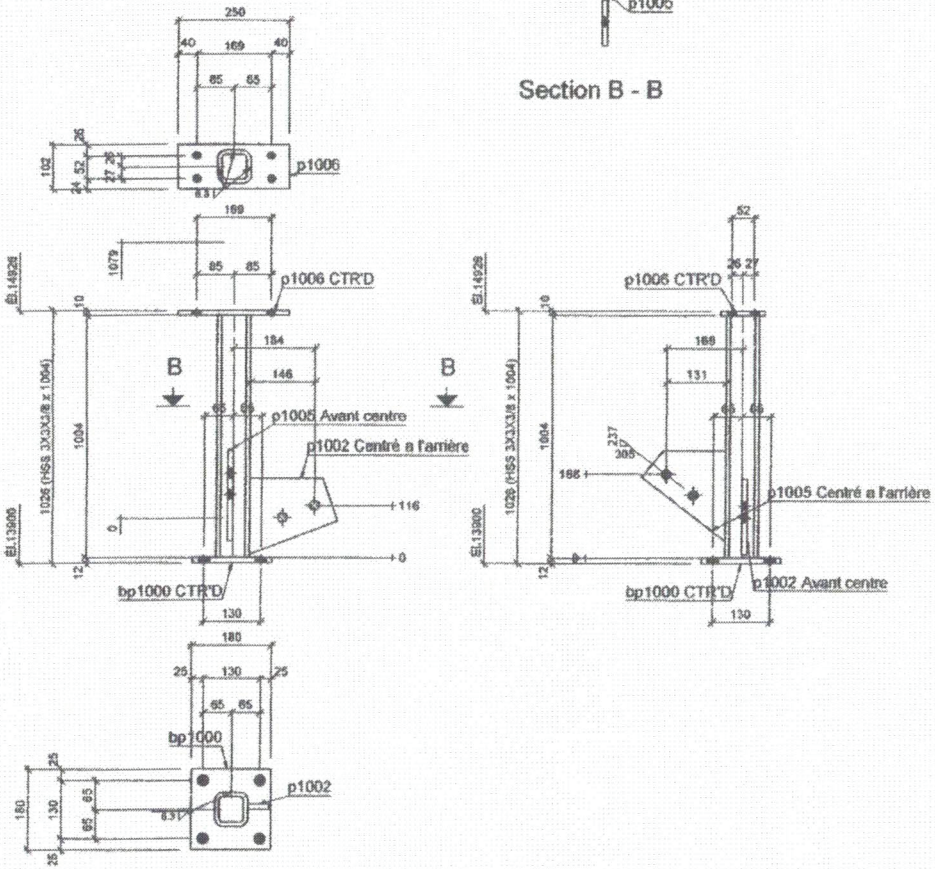

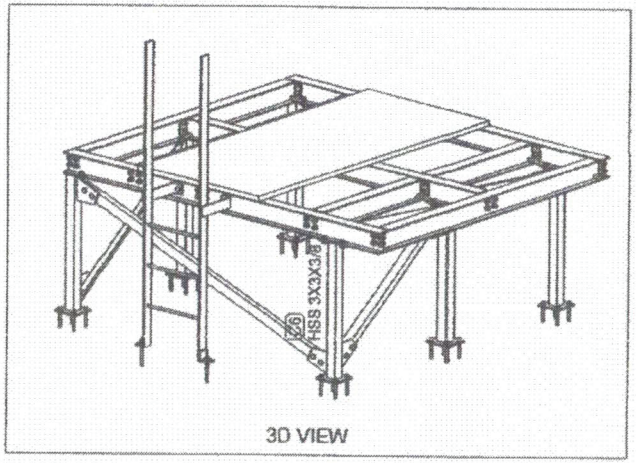

3D VIEW

1 - C6 HSS 3X3X3/8

d=76.2 b=76.2 t=9.5 w=9.5 k=

Grid reference (A-B/1-2)

ALL WELDING
PLAN AND WHAT
WERE MADE
SOUS ALL COMPLIES
CWB

Rev.	Date	Par	Description
REV-A	2018-08-20	Julie Lajoie	Correction apporter tel que demander en date du 8 août 2018
TQC	2018-11-26	Julie lajoie	Tel que construit.

Projet : Screen Platform (Iqaluit Wastewater)

No. Projet : MH.2018.0839_ST

Statut : Non défini	Commentaire :	
Détaillé par : Julie Lajoie	Trou : 13/16"Ø u/n	Client : Const. Gely
Vérifié par: Const. Gely	Soudure : E70XXELECT	No. Dessin : C6
	Acier : A500 GR.B	
	Peinture : Galvanisé	Sequence : TQC
	Date : 2018-08-20	

REGISTERED PROFESSIONAL ENGINEER
LICENSEE
NT/NU

Marque	Quantité	Description	Longueur	Nuance	Finition	Poids	Poids total
C5	1	Poteau					
c1000	1	HSS 3X3X3/8	1004.0	A500 GR.B	Galvanisé	40.063	40.063
bp1000	1	PLT12x180x180	180.0	G40.21		6.729	6.729
p1005	1	PLT12.7x160.9x234.1	234.1	G40.21		5.049	5.049
p1004	1	PLT10x102x250	250.0	G40.21		4.413	4.413
	4					56.254	56.254
	4						56.254

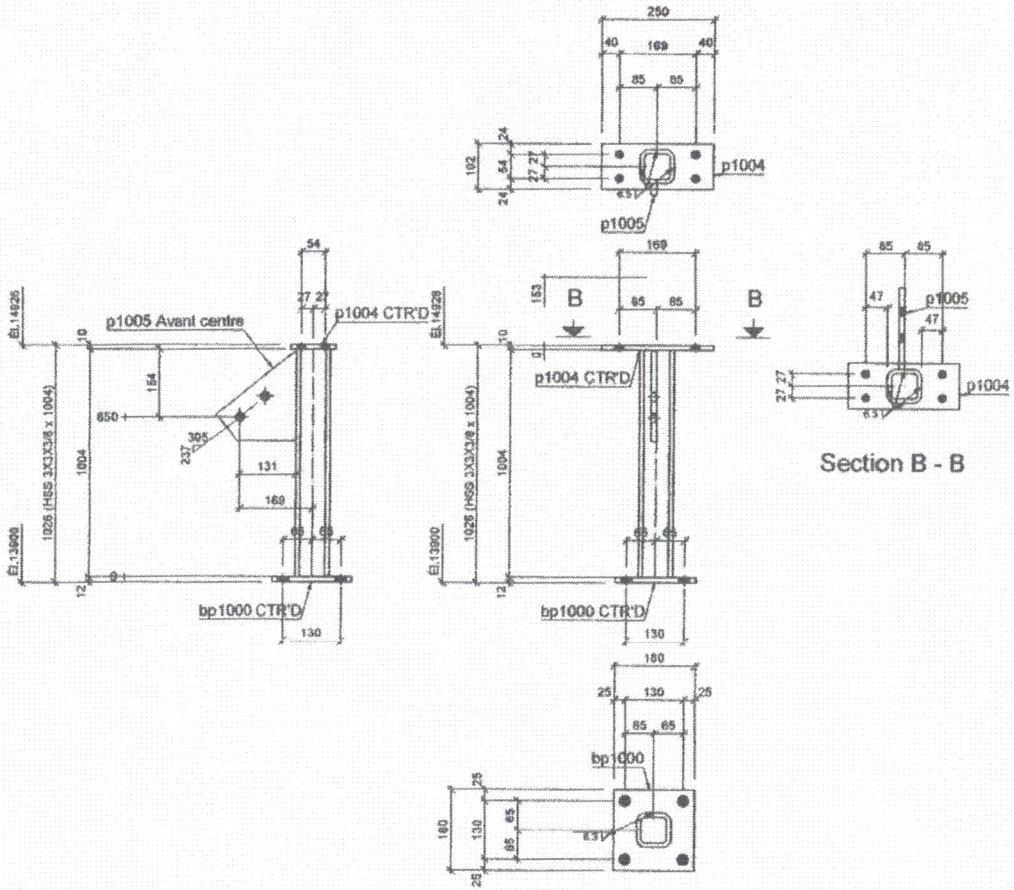

1 - C5 HSS 3X3X3/8

d=76.2 b=76.2 t=9.5 w=9.5 k=

Grid reference (A-B/1-2)

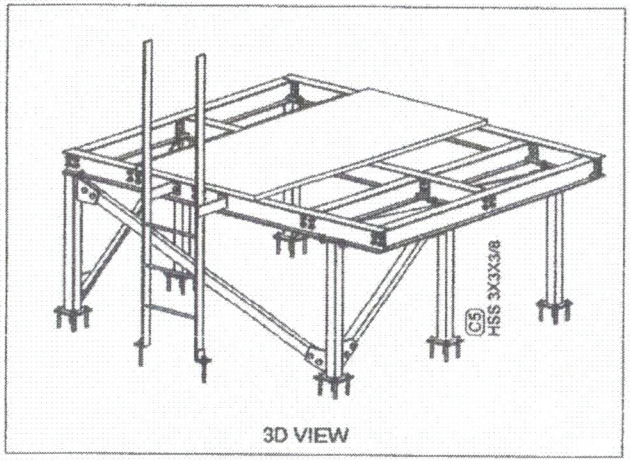

3D VIEW

ALL WELDING PLAN AND WHAT WERE MADE SOUS ALL COMPLIES CWB

Rev.	Date	Par	Description
REV-A	2018-08-20	Julie Lajoie	Correction apporter tel que demander en date du 8 août 2018
TQC	2018-11-26	Julie lajoie	Tel que construit.

Projet : Screen Platform (Iqaluit Wastewater)

No. Projet : MH.2018.0639_ST

Statut : Non défini	Commentaire :	
Détaillé par : Julie Lajoie	Trou : 13/16"Ø s/n	Client : Const. Gely
Vérifié par: Const. Gely	Soudure : E70XXELECT	No. Dessin : C5
	Acier : A500 GR.B	
	Peinture: Galvanisé	Sequence : TQC
	Date : 2018-08-20	

REGISTERED PROFESSIONAL ENGINEER
LICENSEE
NT/NU

Marque	Quantité	Description	Longueur	Nuance	Finition	Poids	Poids total
C4	1	Poteau					
c1000	1	HSS 3X3X3/8	1004.0	A500 GR.B	Galvanisé	40.063	40.063
bp1000	1	PLT12x180x180	180.0	G40.21		6.729	6.729
p1002	1	PLT12.7x159.1x212.9	212.9	G40.21		5.433	5.433
p1004	1	PLT10x102x250	250.0	G40.21		4.413	4.413
	4					56.638	56.638
	4						56.638

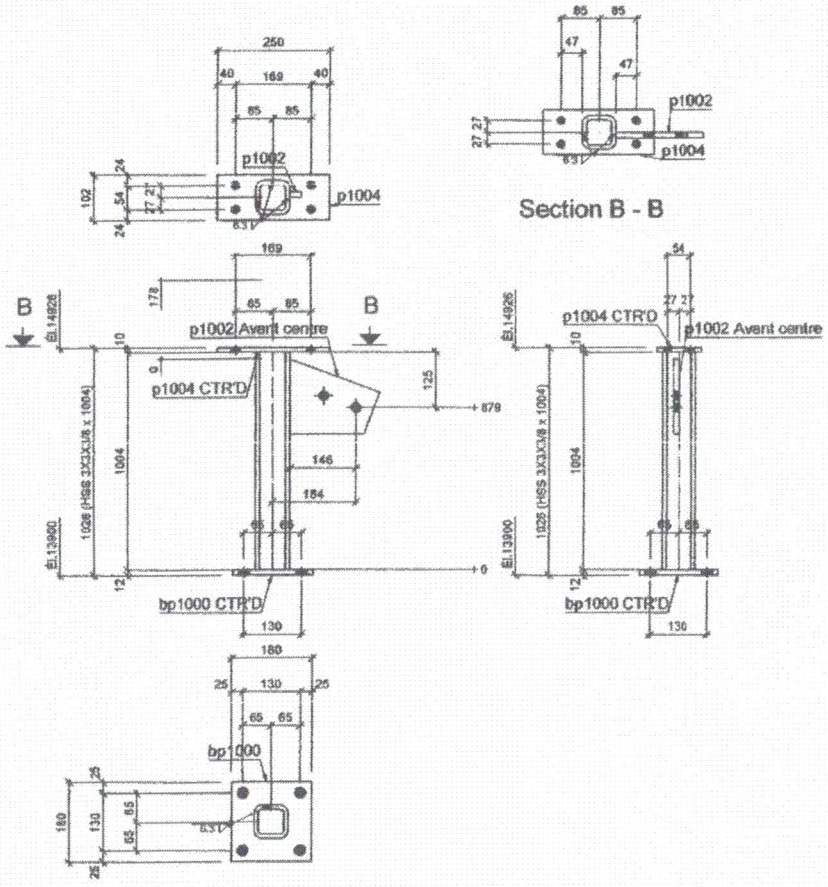

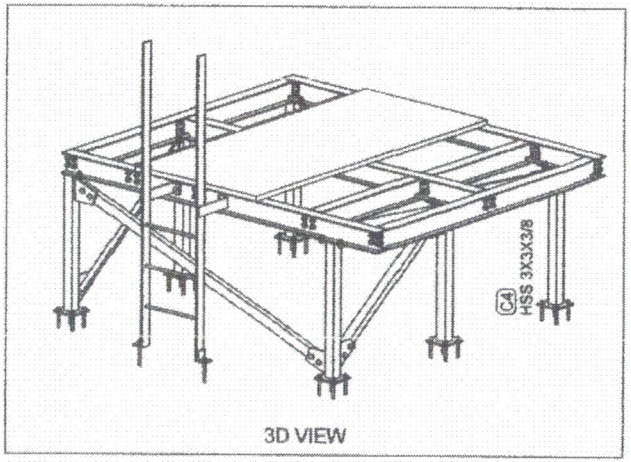

3D VIEW

1 - C4 HSS 3X3X3/8

d=76.2 b=76.2 t=9.5 w=9.5 k=

Grid reference (A-B/1-2)

ALL WELDING PLAN AND WHAT WERE MADE SOUS ALL COMPLIES CWB

Rev.	Date	Par	Description
REV-A	2018-08-20	Julie Lajoie	Correction apporter tel que demander en date du 8 août 2018
TQC	2018-11-26	Julie lajoie	Tel que construit.

Projet : Screen Platform (Iqaluit Wastewater)

No. Projet : MH.2018.0639_ST

Statut : Non défini	Commentaire :	
Détaillé par : Julie Lajoie	Trou : 13/16"Ø u/n	Client : Const. Gely
Vérifié par: Const. Gely	Soudure : E70XXELECT	No. Dessin : C4
	Acier : A500 GR.B	
	Peinture : Galvanisé	Sequence : TQC
	Date : 2018-08-20	

REGISTERED PROFESSIONAL ENGINEER LICENSEE NT/NU

Marque	Quantité	Description	Longueur	Nuance	Finition	Poids	Poids total
C3	1	Poteau					
c1000	1	HSS 3X3X3/8	1004.0	A500 GR.B	Galvanisé	40.063	40.063
bp1000	1	PLT12x180x180	180.0	G40.21		6.729	6.729
p1002	1	PLT12.7x159.1x212.9	212.9	G40.21		5.433	5.433
p1003	1	PLT10x102x200	200.0	G40.21		3.530	3.530
	4					55.755	55.755
	4						55.755

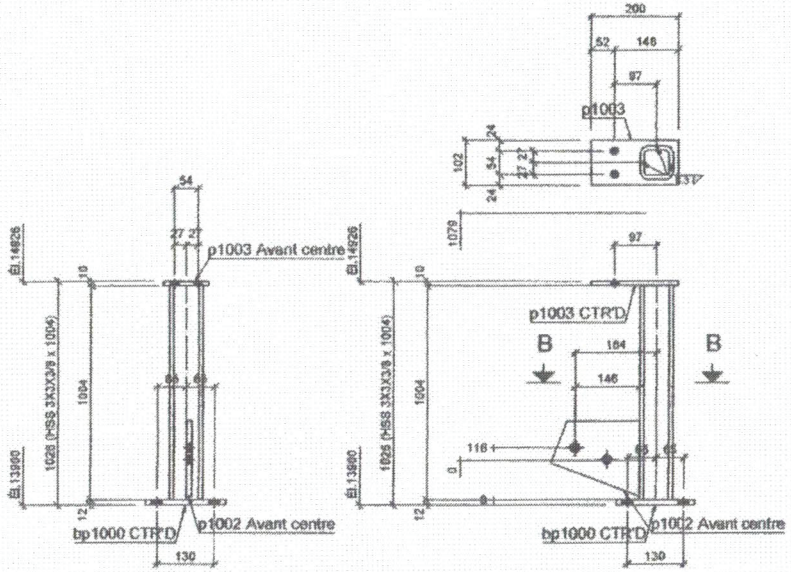

Section B - B

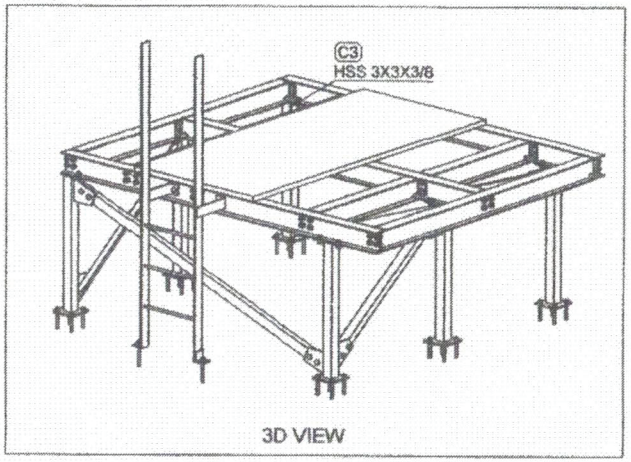

3D VIEW

1 - C3 HSS 3X3X3/8

d=76.2 b=76.2 t=9.5 w=9.5 k=

Grid reference (A-B/1-2)

ALL WELDING PLAN AND WHAT WERE MADE SOUS ALL COMPLIES CWB

Rev.	Date	Par	Description
REV-A	2018-08-20	Julie Lajoie	Correction apporter tel que demander en date du 8 août 2018
TQC	2018-11-26	Julie lajoie	Tel que construit.

Projet : Screen Platform (Iqaluit Wastewater)

No. Projet : MH.2018.0839_ST

Statut : Non défini	Commentaire :	
Détaillé par : Julie Lajoie	Trou : 13/16"Ø u/n	Client : Const. Gely
Vérifié par: Const. Gely	Soudure : E70XXELECT	No. Dessin : C3
	Acier : A500 GR.B	
	Peinture: Galvanisé	Sequence : TQC
	Date : 2018-08-20	

REGISTERED PROFESSIONAL ENGINEER LICENSEE NT/NU

Marque	Quantité	Description	Longueur	Nuance	Finition	Poids	Poids total
C2	1	Poteau					
c1000	1	HSS 3X3X3/8	1004.0	A500 GR.B	Galvanisé	40.063	40.063
bp1000	1	PLT12x180x180	180.0	G40.21		6.729	6.729
p1006	1	PLT12.7x186.3x253.9	253.9	G40.21		6.411	6.411
p1007	1	PLT10x102x250	250.0	G40.21		4.413	4.413
	4					57.616	57.616
	4						57.616

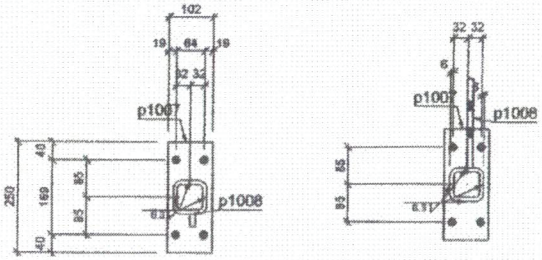

Section B - B

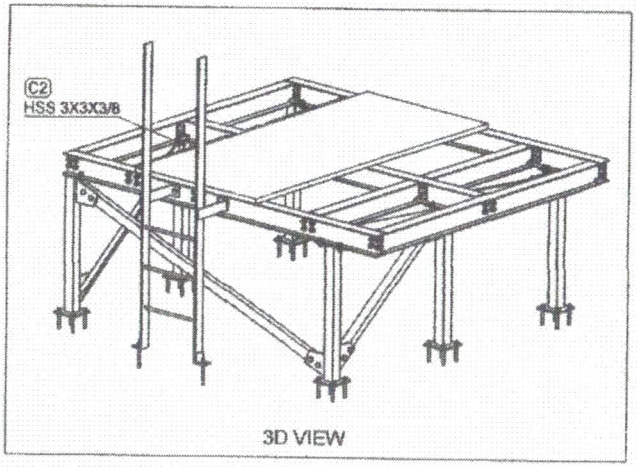

3D VIEW

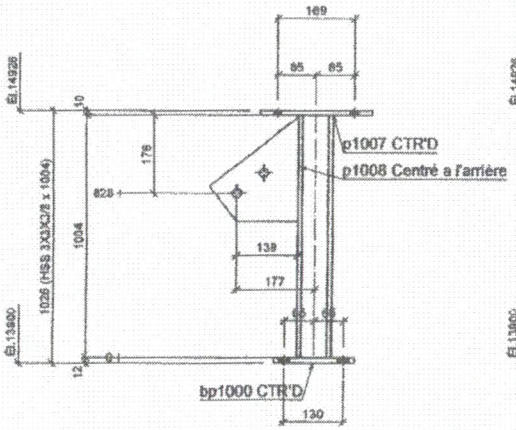

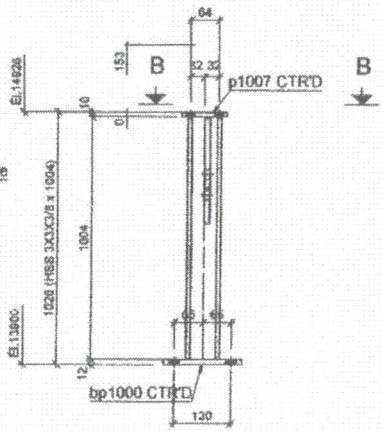

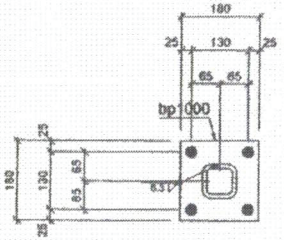

1 - C2 HSS 3X3X3/8

d=76.2 | b=76.2 | t=9.5 | w=9.5 | k=

Grid reference (A-B/1-2)

ALL WELDING PLAN AND WHAT WERE MADE SOUS ALL COMPLIES CWB

Rev.	Date	Par	Description
REV-A	2018-08-20	Julie Lajoie	Correction apporter tel que demander en date du 8 août 2018
TQC	2018-11-26	Julie lajoie	Tel que construit.

Projet : Screen Platform (Iqaluit Wastewater)

No. Projet : MH.2018.0639_ST

Statut : Non défini	Commentaire :	
Détaillé par : Julie Lajoie	Trou : 13/16"Ø u/n	Client : Const. Gely
Vérifié par: Const. Gely	Soudure : E70XXELECT	No. Dessin : C2
	Acier : A500 GR.B	
	Peinture : Galvanisé	Sequence : TQC
	Date : 2018-08-20	

REGISTERED PROFESSIONAL ENGINEER LICENSEE NT/NU

STRUCTURES M.H. inc.

Marque	Quantité	Description	Longueur	Nuance	Finition	Poids	Poids total
C1	1	Poteau					
c1000	1	HSS 3X3X3/8	1004.0	A500 GR.B	Galvanisé	40.063	40.063
bp1000	1	PLT12x180x180	180.0	G40.21		6.729	6.729
p1008	1	PLT12.7x186.3x253.9	253.9	G40.21		6.411	6.411
p1002	1	PLT12.7x159.1x212.9	212.9	G40.21		5.433	5.433
p1003	1	PLT10x102x200	200.0	G40.21		3.530	3.530
	5					62.167	62.167
	5						62.167

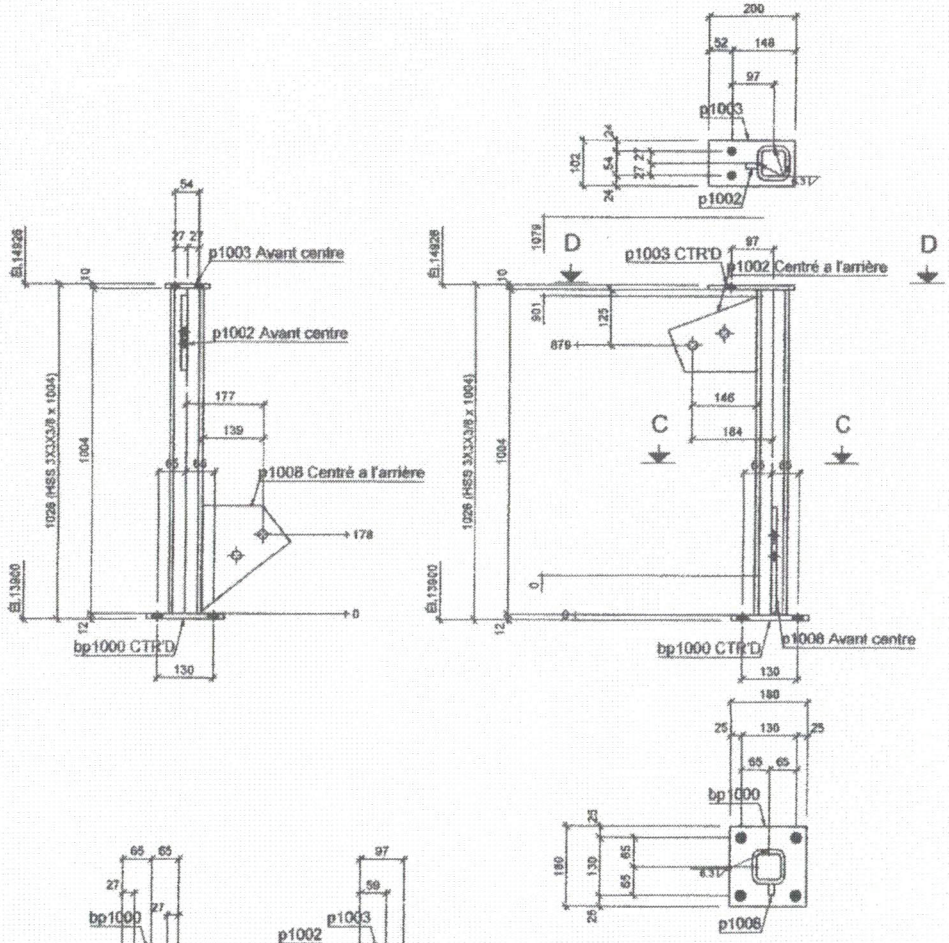

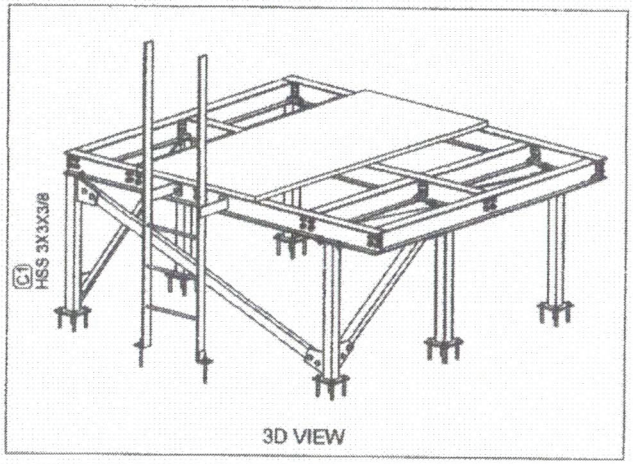

3D VIEW

ALL WELDING PLAN AND WHAT WERE MADE SOUS ALL COMPLIES CWB

Rev.	Date	Par	Description
REV-A	2018-08-20	Julie Lajoie	Correction apporter tel que demander en date du 8 août 2018
TQC	2018-11-26	Julie lajoie	Tel que construit.

Projet : Screen Platform (Iqaluit Wastewater)

No. Projet : MH.2018 0939_ST

Statut : Non défini	Commentaire :	
Détaillé par : Julie Lajoie	Trou : 13/16"Ø u/n	Client : Const. Gely
Vérifié par: Const. Gely	Soudure : E70XXELECT	No. Dessin : C1
	Acier : A500 GR.B	
	Peinture : Galvanisé	Sequence : TQC
	Date : 2018-08-20	

REGISTERED PROFESSIONAL ENGINEER — LICENSEE — NT/NU

Marque	Quantité	Description	Longueur	Nuance	Finition	Poids	Poids total
B10	1	Poutre					
b1005	1	W150x18	2894.01	350W	Galvanisé	114.843	114.843
	1					114.843	114.843
	1						114.843

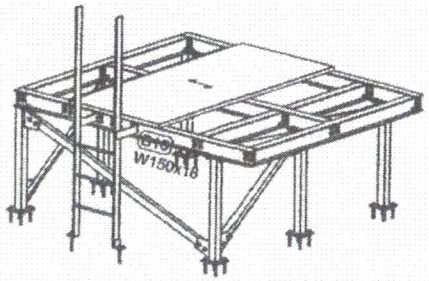

3D VIEW

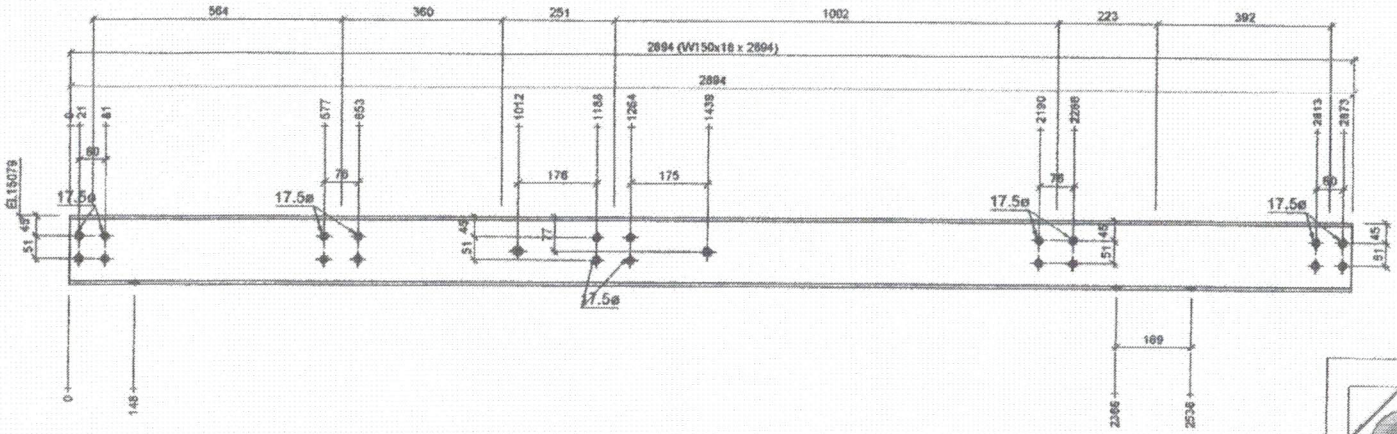



1 - B10 W150x18

d=153 b=102 t=7.1 w=5.8 k=19

Grid reference (A-B/1-2)

ALL WELDING PLAN AND WHAT WERE MADE SOUS ALL COMPLIES CWB

Rev.	Date	Par	Description
REV-A	2018-08-20	Julie Lajoie	Correction apporter tel que demander en date du 8 août 2018
TQC	2018-11-26	Julie lajoie	Tel que construit.

Projet : Screen Platform (Iqaluit Wastewater)

No. Projet : MH.2018.0836_ST

Statut : Non défini	Commentaire :	
Détaillé par : Julie Lajoie	Trou : 13/16"Ø u/h	Client : Const. Gely
Vérifié par: Const. Gely	Soudure : E70XXELECT	No. Dessin : B10
	Acier : 300W,350W,A-1001,A36,A500Gr.B,G40.21	
	Peinture: Aucun,Galvanisé	Sequence : TQC
	Date : 2018-08-20	

REGISTERED PROFESSIONAL ENGINEER
LICENSEE
NT/NU

Marque	Quantité	Description	Longueur	Nuance	Finition	Poids	Poids total
B9	1	Poutre					
b1004	1	W150x18	2894.01	350W	Galvanisé	114.843	114.843
	1					114.843	114.843
	1						114.843

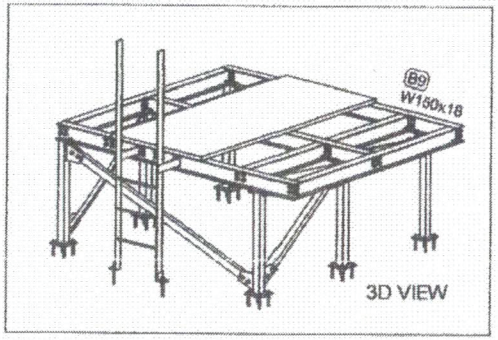

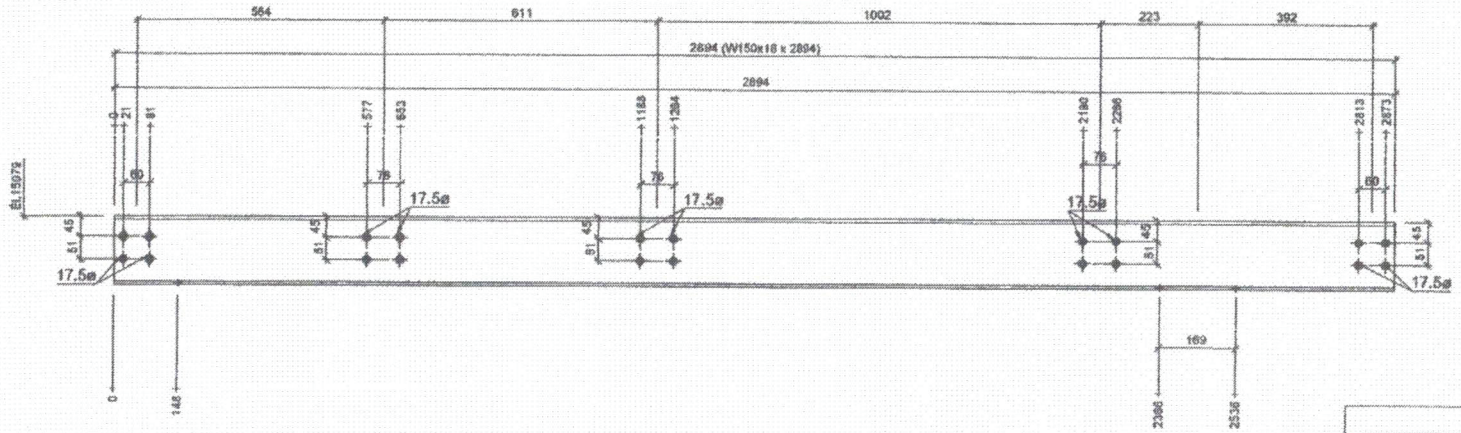



1 - B9 W150x18

d=153 b=102 t=7.1 w=5.8 k=19

Grid reference (A-B/1-2)

REGISTERED PROFESSIONAL ENGINEER
LICENSEE
NT/NU

ALL WELDING PLAN AND WHAT WERE MADE SOUS ALL COMPLIES CWB

Rev.	Date	Par	Description
REV-A	2018-08-20	Julie Lajoie	Correction apporter tel que demander en date du 8 août 2018
TQC	2018-11-26	Julie lajoie	Tel que construit.

Projet : Screen Platform (Iqaluit Wastewater)

No. Projet : MH.2018.0838_ST

Statut : Non défini	Commentaire :	
Détaillé par : Julie Lajoie	Trou : 13/16"Ø u/h	Client : Const. Gely
Vérifié par: Const. Gely	Soudure : E70XXELECT	No. Dessin : B9
STRUCTURES M.H. Inc.	Acier : 300W,350W,A-1001,A36,A500 GR.B,G40.21	
	Peinture : Aucun,Galvanisé	Sequence : TQC
	Date : 2018-08-20	

Marque	Quantité	Description	Longueur	Nuance	Finition	Poids	Poids total
B8	1						
p1006	1	W150x18	2351.2	350W	Galvanisé	93.303	93.303
p1001	2	PLT10x100x111	111.0	G40.21		1.921	3.842
	3					97.145	97.145
	3						97.145

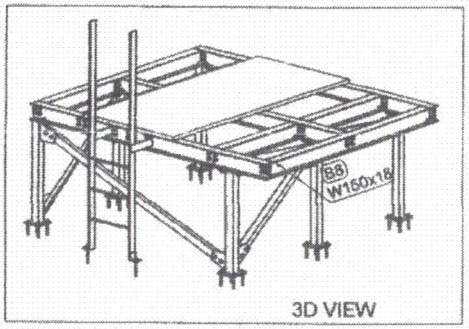

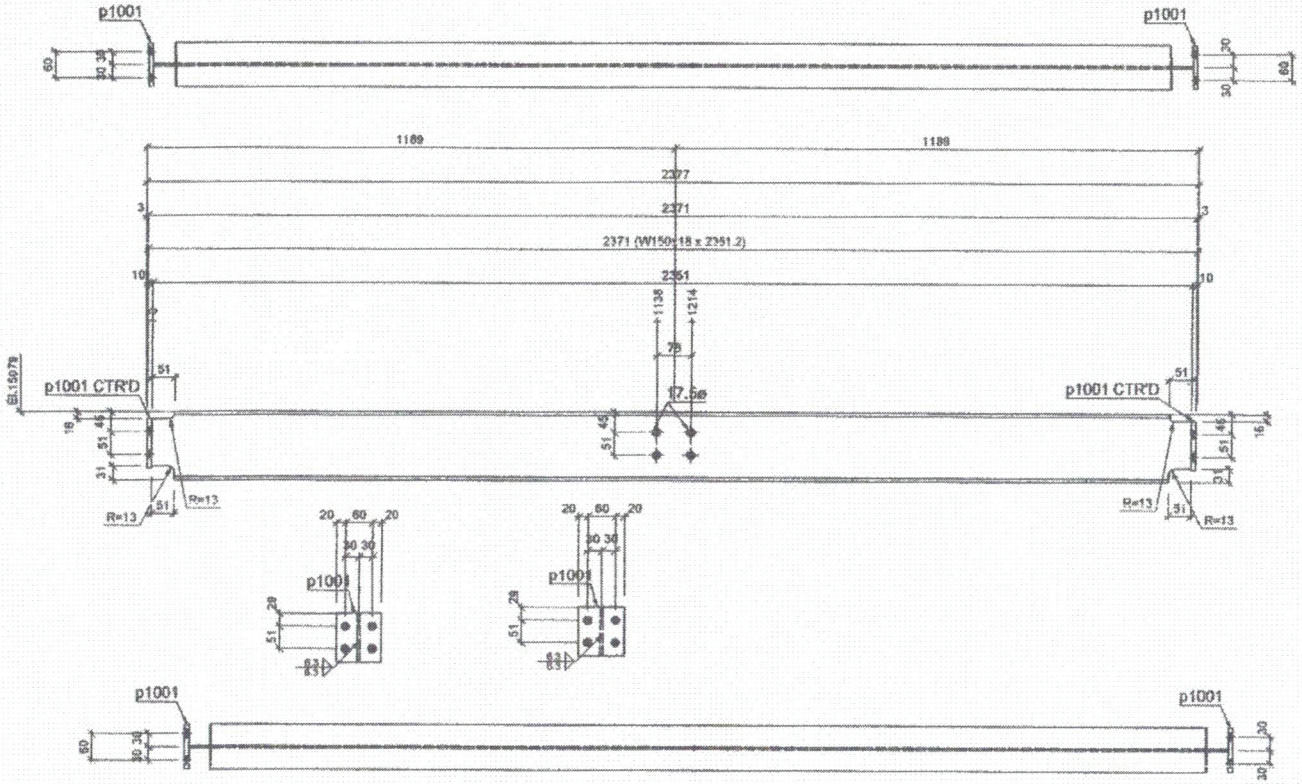

1 - B8 W150x18

d=153 b=102 t=7.1 w=5.8 k=19

Grid reference (1-2/A-B)

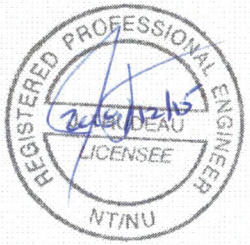

CWB certificationcwb

ALL WELDING PLAN AND WHAT WERE MADE SOUS ALL COMPLIES CWB

Rev.	Date	Par	Description
REV-A	2018-08-20	Julie Lajoie	Correction apporter tel que demander en date du 8 août 2018
TQC	2018-11-26	Julie lajoie	Tel que construit.

Projet : Screen Platform (Iqaluit Wastewater)

No. Projet : MH.2018.0839_ST

Statut : Non défini	Commentaire :	
Détaillé par : Julie Lajoie	Trou : 13/16"Ø s/n	Client : Const. Gely
Vérifié par: Const. Gely	Soudure : E70XXELECT	No. Dessin : B8
STRUCTURES M.H. Inc.	Acier : 300W,350W,A-1001,A36,A500 GR.B,G40.21	
	Peinture : Aucun,Galvanisé	Sequence : TQC
	Date : 2018-08-26	

Marque	Quantité	Description	Longueur	Nuance	Finition	Poids	Poids total
B7	1						
b1009	1	W150x18	1162.7	350W	Galvanisé	46.140	46.140
p1000	2	PLT10x111x140	140.0	G40.21		2.689	5.379
	3					51.518	51.518
	3						51.518

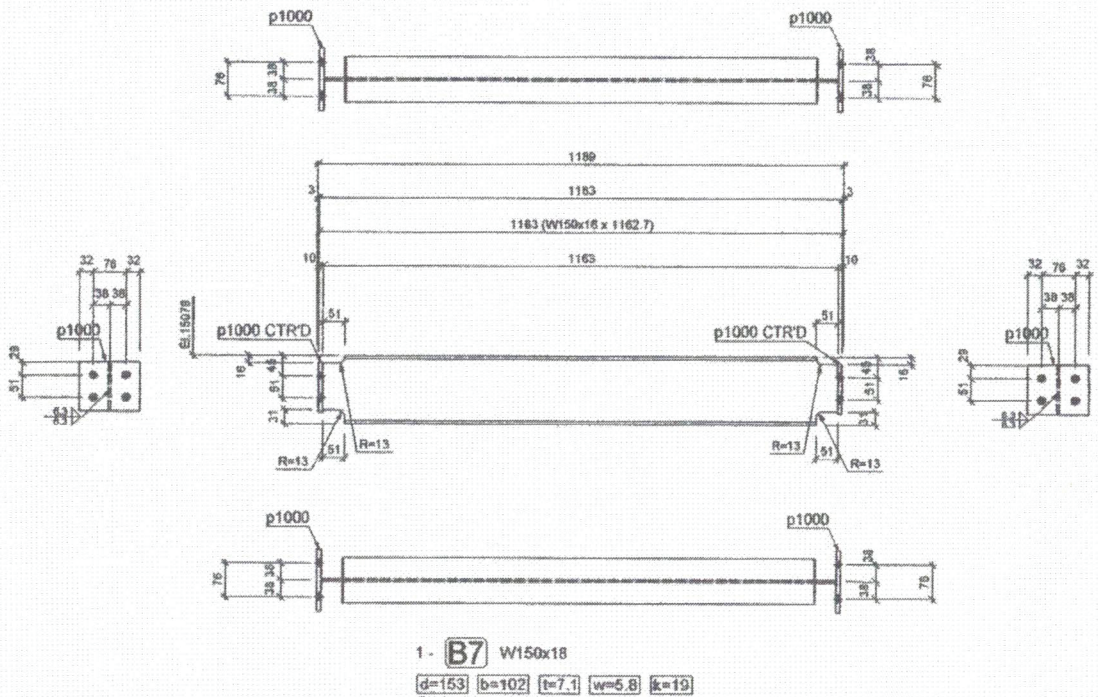

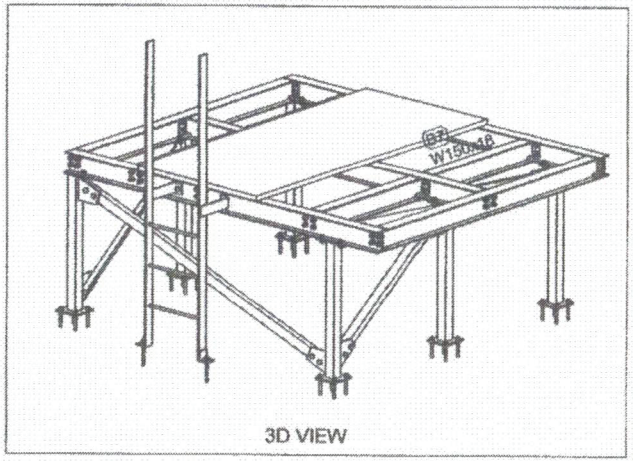

3D VIEW

1 - B7 W150x18

d=153 b=102 t=7.1 w=5.8 k=19

Grid reference (1-2/A-B)

ALL WELDING PLAN AND WHAT WERE MADE SOUS ALL COMPLIES CWB

Rev.	Date	Par	Description
REV-A	2018-08-20	Julie Lajoie	Correction apporter tel que demander en date du 8 août 2018
TQC	2018-11-26	Julie lajoie	Tel que construit.

REGISTERED PROFESSIONAL ENGINEER LICENSEE NT/NU

Projet : Screen Platform (Iqaluit Wastewater)

No. Projet : MH.2018.0839_ST

Statut : Non défini	Commentaire :		
Détaillé par : Julie Lajoie	Trou : 13/16"Ø u/h	Client : Const. Gely	
Vérifié par: Const. Gely	Soudure : E70XXELECT	No. Dessin : B7	
	Acier : 350W		
	Peinture: Galvanisé	Sequence : TQC	
	Date : 2018-08-20		

Marque	Quantité	Description	Longueur	Nuance	Finition	Poids	Poids total
B6	1	Poutre					
p1006	1	W150x18	2766.2	350W	Galvanisé	109.772	109.772
p1000	2	PLT10x111x140	140.0	G40.21		2.689	5.379
	3					115.150	115.150
	3						115.150

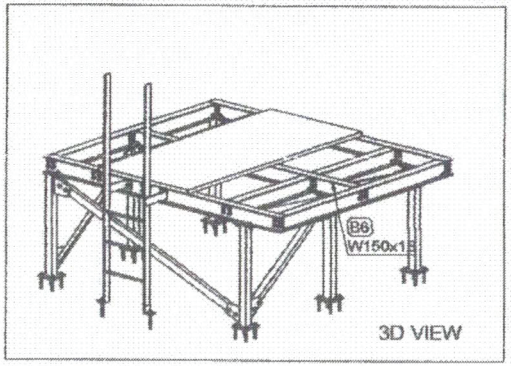

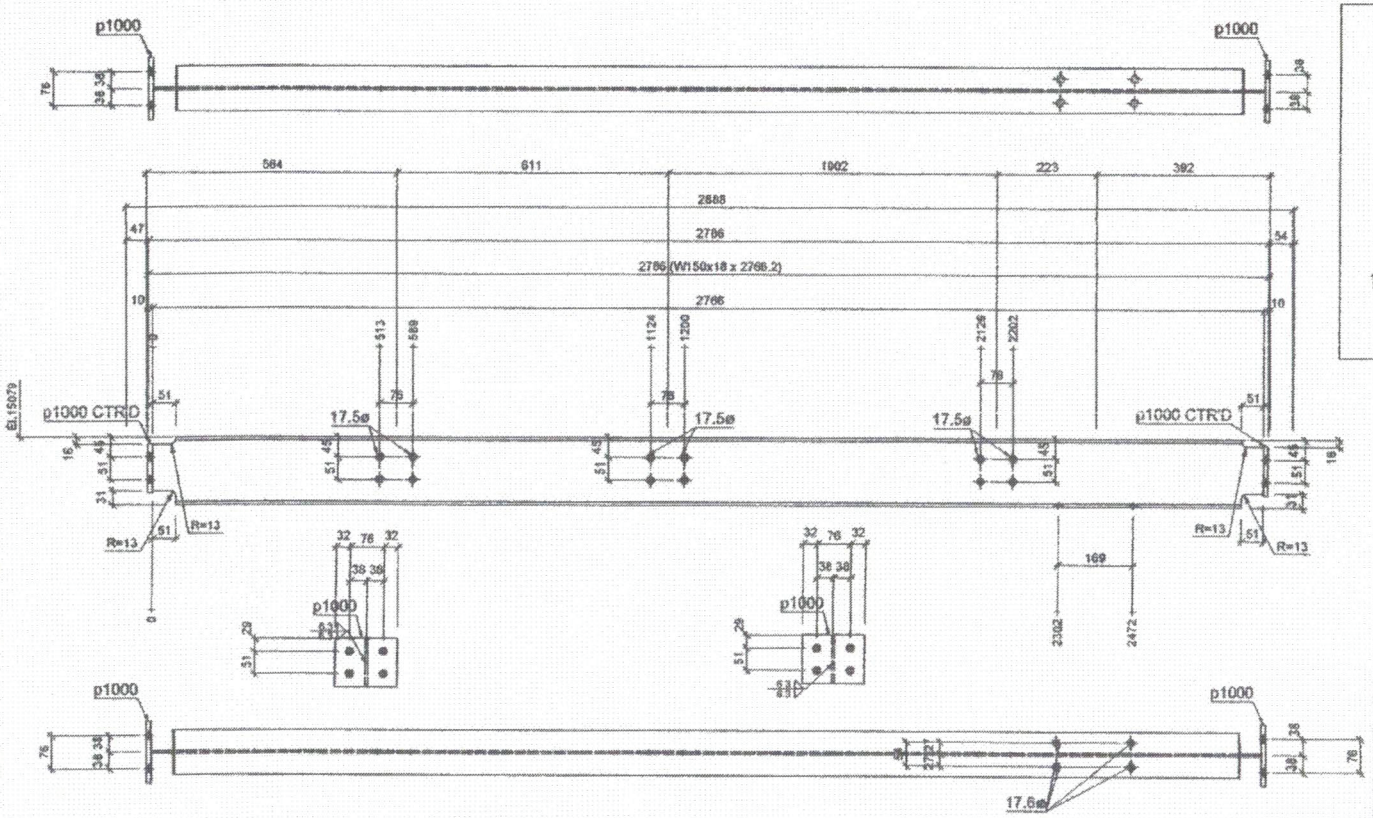

1 - B6 W150x18

d=153 b=102 t=7.1 w=5.8 k=19

Grid reference (A-B/1-2)

ALL WELDING PLAN AND WHAT WERE MADE SOUS ALL COMPLIES CWB

Rev.	Date	Par	Description
REV-A	2018-08-20	Julie Lajoie	Correction apporter tel que demander en date du 8 août 2018
TQC	2018-11-26	Julie lajoie	Tel que construit.

Projet : Screen Platform (Iqaluit Wastewater)

No. Projet : MH.2018.0839_ST

Statut : Non défini	Commentaire :	
Détaillé par : Julie Lajoie	Trou : 13/16"Ø sh	Client : Const. Gely
Vérifié par: Const. Gely	Soudure : E70XXELECT	No. Dessin : B6
	Acier : 300W,350W,A-1001,A36,A500B,G40.21	
	Peinture : Aucun,Galvanisé	Sequence : TQC
	Date : 2018-08-20	

REGISTERED PROFESSIONAL ENGINEER LICENSEE NT/NU

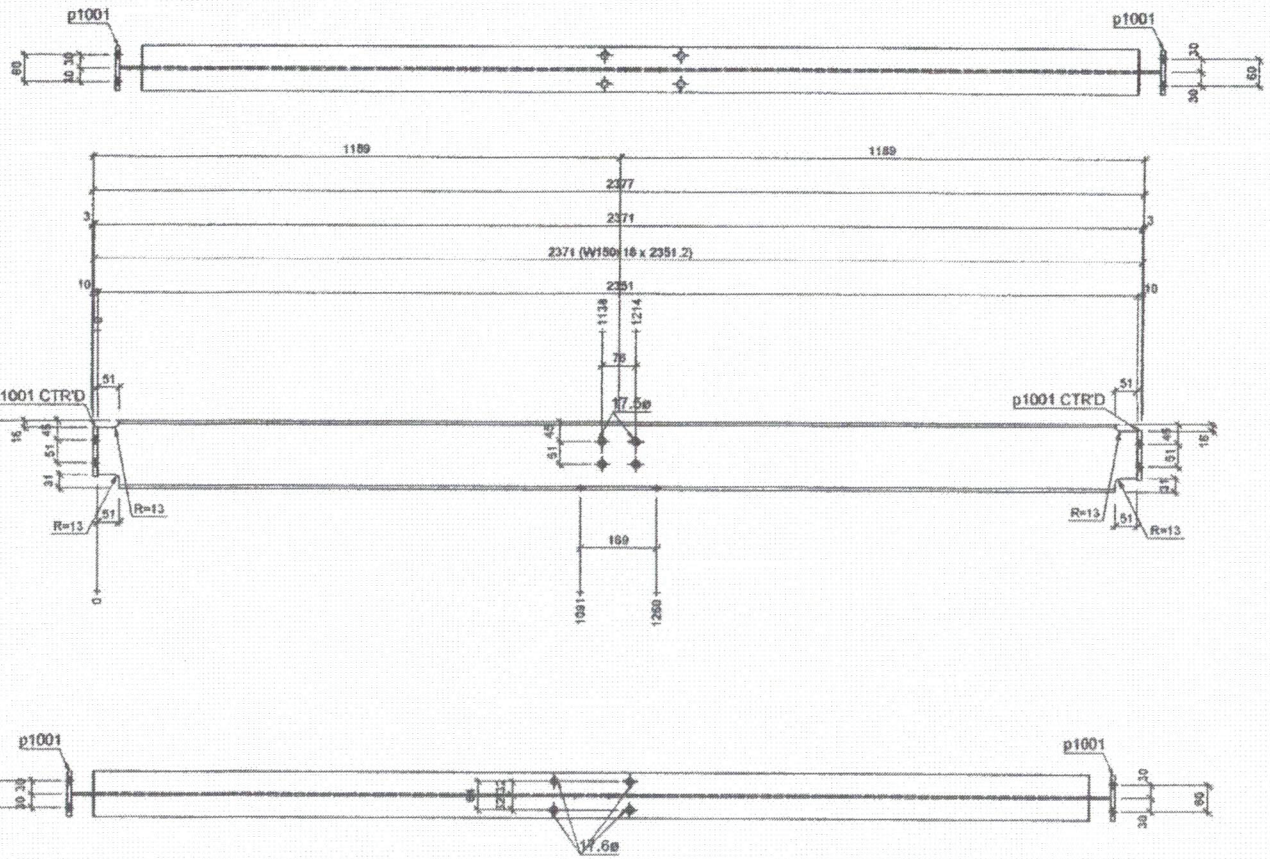

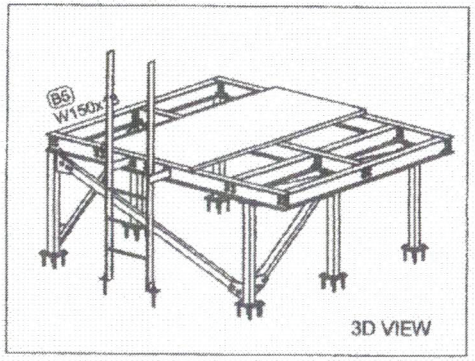

1 - B5 W150x18

d=153 b=102 t=7.1 w=5.8 k=19

Grid reference (1-2/A-B)

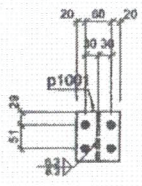

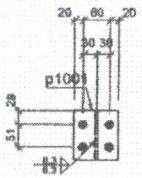

ALL WELDING PLAN AND WHAT WERE MADE SOUS ALL COMPLIES CWB

Rev.	Date	Par	Description
REV-A	2018-08-20	Julie Lajoie	Correction apporter tel que demander en date du 8 août 2018
TQC	2018-11-26	Julie lajoie	Tel que construit.

Projet : Screen Platform (Iqaluit Wastewater)

No. Projet : MH.2018.0839_ST

Statut : Non défini	Commentaire :	
Détaillé par : Julie Lajoie	Trou : 13/16"Ø u/n	Client : Const. Gely
Vérifié par: Const. Gely	Soudure : E70XXELECT	No. Dessin : B5
	Acier : 300W,350W,A-1001,A36,A500GrB,G40.21	
	Peinture : Aucun,Galvanisé	Sequence : TQC
	Date : 2018-08-20	

REGISTERED PROFESSIONAL ENGINEER LICENSEE NT/NU

Marque	Quantité	Description	Longueur	Nuance	Finition	Poids	Poids total
B4	1	Contreventement diagonal					
b1003	1	L76X51X4.8	1306.1	300W	Galvanisé	12.957	12.957
	1					12.957	12.957
	1						12.957

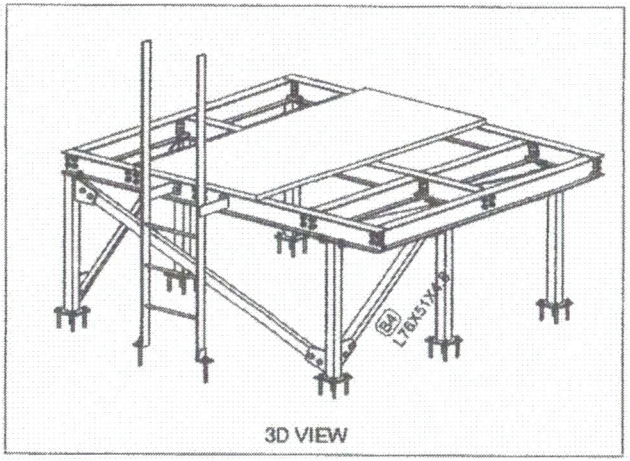

3D VIEW

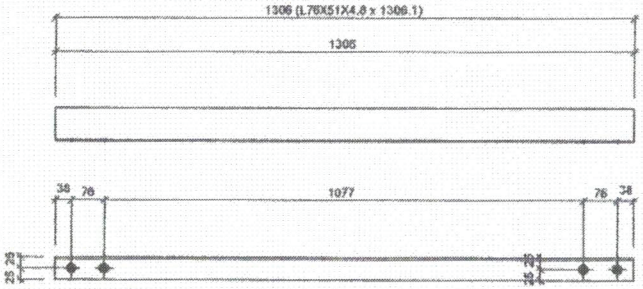

1 - B4 L76X51X4.8
Grid reference (1-2/A-B)

ALL WELDING PLAN AND WHAT WERE MADE SOUS ALL COMPLIES CWB

Rev.	Date	Par	Description
REV-A	2018-08-20	Julie Lajoie	Correction apporter tel que demander en date du 8 août 2018
TQC	2018-11-26	Julie lajoie	Tel que construit.

Projet : Screen Platform (Iqaluit Wastewater)
No. Projet : MH.2018.0839_ST

Statut : Non défini	Commentaire :	
Détaillé par : Julie Lajoie	Trou : 13/16"Ø u/n	Client : Const. Gely
Vérifié par: Const. Gely	Soudure : E70XXELECT	No. Dessin : B4
	Acier : 300W	
	Peinture: Galvanisé	Sequence TQC
	Date : 2018-08-20	

REGISTERED PROFESSIONAL ENGINEER
LICENSEE
NT/NU

Marque	Quantité	Description	Longueur	Nuance	Finition	Poids	Poids total
B3	1	Contreventement diagonal					
b1002	1	L76X51X4.8	1286.3	300W	Galvanisé	12.761	12.761
	1					12.761	12.761
	1						12.761

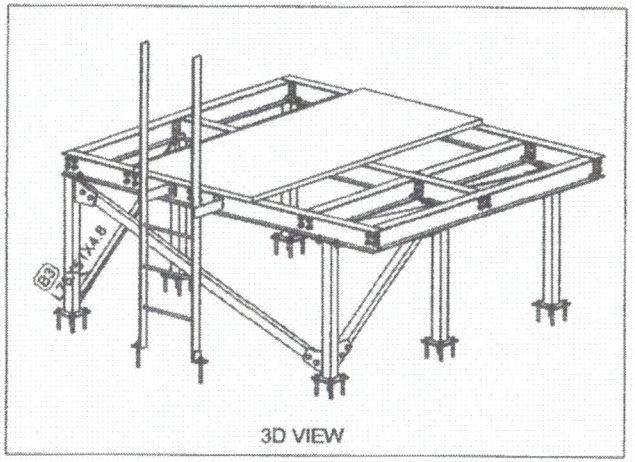

3D VIEW

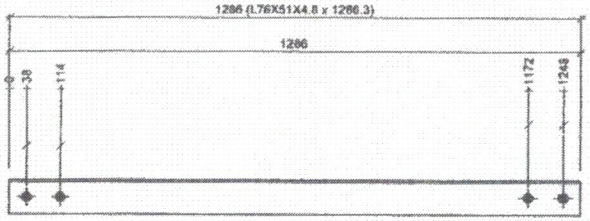

1 - B3 L76X51X4.8
Grid reference (1-2/A-B)

ALL WELDING PLAN AND WHAT WERE MADE SOUS ALL COMPLIES CWB

Rev.	Date	Par	Description
REV-A	2018-08-20	Julie Lajoie	Correction apporter tel que demander en date du 8 août 2018
TQC	2018-11-26	Julie lajoie	Tel que construit.

Projet : Screen Platform (Iqaluit Wastewater)
No. Projet : MH.2018.0639_ST

Statut : Non defini	Commentaire :	
Dessiné par : Julie Lajoie	Trou : 13/16"Ø v/n	Client : Const. Gely
Vérifié par: Const. Gely	Soudure : E70XXELECT	No. Dessin : B3
	Acier : 300W	
	Peinture: Galvanisé	Sequence : TQC
	Date : 2018-08-20	

REGISTERED PROFESSIONAL ENGINEER
LICENSEE
NT/NU

Marque	Quantité	Description	Longueur	Nuance	Finition	Poids	Poids total
B2	2	Contreventement diagonal					
b1001	2	L76X51X4.8	2399.3	300W	Galvanisé	23.803	47.606
	2					23.803	47.606
	2						47.606

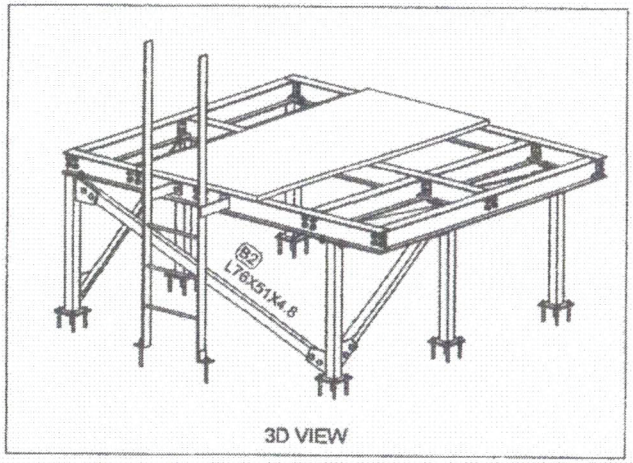

3D VIEW

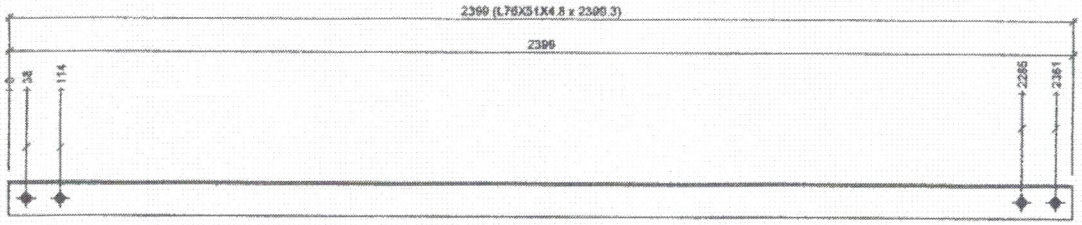

2 - B2 L76X51X4.8
Grid reference (A-B/1-2), (A-B/1-2)

REGISTERED PROFESSIONAL ENGINEER
J. TRUDEAU
LICENSEE
NT/NU

ALL WELDING PLAN AND WHAT WERE MADE SOUS ALL COMPLIES CWB

Rev.	Date	Par	Description
REV-A	2018-08-20	Julie Lajoie	Correction apporter tel que demander en date du 8 août 2018
TQC	2018-11-26	Julie lajoie	Tel que construit.

Projet : Screen Platform (Iqaluit Wastewater)
No. Projet : MH.2018 0839_ST

Statut : Non défini	Commentaire :	
Détaillé par : Julie Lajoie	Trou : 13/16"Ø c/n	Client : Const. Gely
Vérifié par: Const. Gely	Soudure : E70XXELECT	No. Dessin : B2
STRUCTURES M.H. inc. ENTREPRENEUR GÉNÉRAL	Acier : 300W	
	Peinture : Galvanisé	Séquence : TQC
	Date : 2018-08-20	

SUBMITTALS IDENTIFICATION SHEET

PROJECT: Wastewater Treatment Plant Upgrade
Iqaluit, Nunavut

CONTRACTOR: Kudlik Construction Ltd, Project 2018-062

Telephone: 867-979-1166

E-mail: srousseau@kudlik.biz

SUBCONTRACTOR:

Person responsible:

Telephone: () E-mail:

PRODUCT SUBMITTED:

☑ As Specified

☑ Alternate

SUPPLIER or MANUFACTURER: Moulure 2000

Person responsible: Benoit Prevost

Telephone: 418-496-6656 E-mail:

DESCRIPTION OF SUBMITTAL: Metal Sidding

# of pages:

Reference to drawings:

Reference to specs:

Division: 07 Section: 07 46 13 – 07 46 19

REMARKS:

REVIEW AND COMMENTS (for use by Consultants):

STANTEC PROJECT #: 110126045-IWWTP SUBMITTAL # SU-001

This review by Stantec is for general conformance with the design concept of Stantec's design of the:

☑ Architectural ☐ Electrical
☐ Structural ☐ Other
☐ Mechanical

component(s) only and does not mean that Stantec has verified or approves the shop drawing(s). The Contractor remains solely responsible for the shop drawing(s) and this review by Stantec does not relieve the Contractor of the Contractor's responsibility for errors or omissions in the shop drawing(s) or for meeting all requirements of the contract documents. This review does not mean that Stantec approves the detailed design inherent in the shop drawing, responsibility for which shall remain with the Contractor submitting same, nor does this review mean that Stantec accepts any deviation of the shop drawing(s) from the contract documents. The Contractor is responsible for confirming all dimensions and correlating them at the job site, for all construction means, methods and techniques, and for coordination of construction work of all trades, including coordination of all shop drawings.

Stantec

☐ REVIEWED

☑ REVIEWED, AS NOTED

☐ REVISE AND RESUBMIT

☐ NOT REVIEWED

DATE 2018-06-07

BY TFlender

Review of this submission is for compliance with general intent of the contract. This review does not relieve the Sub-Contractor, Supplier or Manufacturer of responsibility for error or omissions in the submission or the responsibility of meeting all requirements of the contract documents. Any deviation from the contract documents initiated by the Sub-Contractor, Supplier or Manufacturer shall be at their sole risk. QUANTITIES AND DETAIL DIMENSIONS ARE THE SUB-CONTRACTORS OR SUPPLIERS RESPONSIBILITY. VERIFY DATA WITH FIELD DIMENSIONS.

SUBMITTAL TRACKING No.: **SU-001** 2018-06-07

07 46 13 item 2.1
Galvalume gauge 22
royal blue QC56081 gauge 22
International Orange QC56063 gauge 24
Gold QC56070 Gauge 24
Bright Red QC56080 Gauge 26

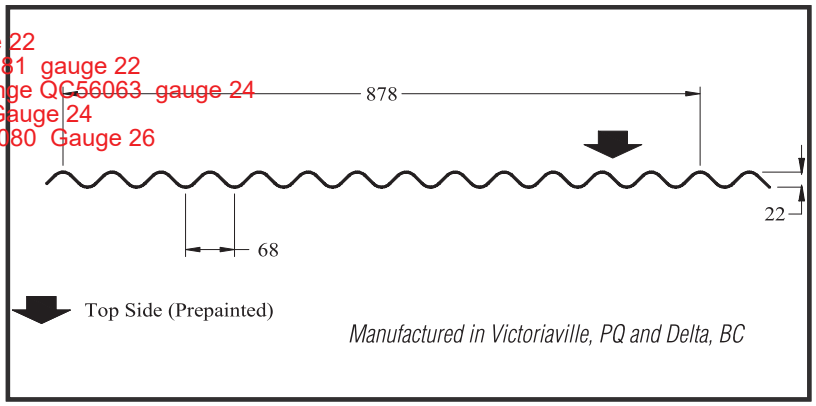

Manufactured in Victoriaville, PQ and Delta, BC

CLADDING

2-2/3" x 7/8" CORRUGATED

Metric

LIMIT STATES DESIGN

PHYSICAL PROPERTIES

(PER METRE WIDTH)
In accordance with CSA Specification S136-07

Base Steel Nominal Thickness (mm)	Nominal Thickness Z275 Coating (mm)	Mass with Coating (kg/m^2)	Section Modulus		Moment of Inertia	Factored Resistance			
						Moment		Reaction	
			Midspan ($mm^3 \times 10^3$)	Support ($mm^3 \times 10^3$)	Midspan ($mm^4 \times 10^3$)	Midspan (N-m)	Support (N-m)	Exterior (kN)	Interior (kN)
0.46	0.50	5.47	2.72	2.72	29.6	563.0	563.0	-----	-----
0.61	0.65	7.07	3.61	3.61	39.5	747.3	747.3	-----	-----
0.76	0.80	8.70	4.49	4.49	49.3	929.4	929.4	-----	-----
0.91	0.95	10.33	5.36	5.36	59.2	1109.5	1109.5	-----	-----
1.22	1.26	13.59	7.04	7.04	78.7	1457.3	1457.3	-----	-----

LOAD TABLE

Maximum Specified Uniformly Distributed Load in kN/m^2 (kPa)

Support Spacing (mm)		1-Span Base Steel Nominal Thickness (mm)					2-Span Base Steel Nominal Thickness (mm)					3-Span Base Steel Nominal Thickness (mm)				
		0.46	0.61	0.76	0.91	1.22	0.46	0.61	0.76	0.91	1.22	0.46	0.61	0.76	0.91	1.22
1200	B	2.1	2.8	3.4	4.1	5.4	2.1	2.8	3.4	4.1	5.4	2.6	3.5	4.3	5.1	6.7
	D	1.5	2.0	2.5	3.0	3.9	3.6	4.8	5.9	7.1	9.5	2.8	3.7	4.7	5.6	7.5
1300	B	1.8	2.4	2.9	3.5	4.6	1.8	2.4	2.9	3.5	4.6	2.2	2.9	3.7	4.4	5.7
	D	1.2	1.6	1.9	2.3	3.1	2.8	3.7	4.7	5.6	7.4	2.2	2.9	3.7	4.4	5.9
1400	B	1.5	2.0	2.5	3.0	4.0	1.5	2.0	2.5	3.0	4.0	1.9	2.5	3.2	3.8	5.0
	D	0.9	1.2	1.6	1.9	2.5	2.2	3.0	3.7	4.5	6.0	1.8	2.4	2.9	3.5	4.7
1500	B	1.3	1.8	2.2	2.6	3.5	1.3	1.8	2.2	2.6	3.5	1.7	2.2	2.8	3.3	4.3
	D	0.8	1.0	1.3	1.5	2.0	1.8	2.4	3.0	3.6	4.8	1.4	1.9	2.4	2.9	3.8
1600	B	1.2	1.6	1.9	2.3	3.0	1.2	1.6	1.9	2.3	3.0	1.5	1.9	2.4	2.9	3.8
	D	0.6	0.8	1.0	1.3	1.7	1.5	2.0	2.5	3.0	4.0	1.2	1.6	2.0	2.4	3.1
1700	B	1.0	1.4	1.7	2.0	2.7	1.0	1.4	1.7	2.0	2.7	1.3	1.7	2.1	2.6	3.4
	D	0.5	0.7	0.9	1.0	1.4	1.3	1.7	2.1	2.5	3.3	1.0	1.3	1.6	2.0	2.6
1800	B		1.2	1.5	1.8	2.4		1.2	1.5	1.8	2.4	1.2	1.5	1.9	2.3	3.0
	D		0.6	0.7	0.9	1.2		1.4	1.8	2.1	2.8	0.8	1.1	1.4	1.7	2.2
1900	B		1.1	1.4	1.6	2.2		1.1	1.4	1.6	2.2	1.0	1.4	1.7	2.0	2.7
	D		0.5	0.6	0.7	1.0		1.2	1.5	1.8	2.4	0.7	0.9	1.2	1.4	1.9
2000	B			1.2	1.5	1.9			1.2	1.5	1.9		1.2	1.5	1.8	2.4
	D			0.5	0.6	0.9			1.3	1.5	2.0		0.8	1.0	1.2	1.6
2100	B			1.1	1.3	1.8			1.1	1.3	1.8		1.1	1.4	1.7	2.2
	D			0.5	0.6	0.7			1.1	1.3	1.8		0.7	0.9	1.0	1.4
2200	B			1.0	1.2	1.6			1.0	1.2	1.6		1.0	1.3	1.5	2.0
	D			0.4	0.5	0.6			1.0	1.2	1.5		0.6	0.8	0.9	1.2

Note

1. Properties and loads are based on Grade 230 Steel with a minimum yield stress of 230 MPa, and a maximum stress under Factored loads of 207 MPa.
2. Figures in Row B indicate the load capacity based on strength. Strength capacity B should be checked against [Specified Live Load]+[0.833 x Specified Dead Load].
3. Where cladding is subjected only to wind load, strength values may be increased by 7%.
4. Figures in row D indicate the load capacity based on deflection of 1/180th span. For allowable deflection of 1/90th span, values in Row D can be doubled, but must not exceed the value in Row B. Deflection capacity should be checked against specified Load(s).
5. An * indicates capacity has been reduced to account for web crippling.

In accordance with ongoing efforts to improve our products and their performance, Vicwest reserves the right to change without notice the specifications contained herein.

The contents herein are for general information and illustrative purposes only and are not intended to serve as any type of advice. Every effort is made to ensure the accuracy of the information included in this brochure and it is believed that the information contained herein is accurate and reliable as of the date of publication. Vicwest, however, does not warrant or represent the accuracy or reliability of any information included in this brochure. Any reliance on any information without consultation with Vicwest or a duly authorized representative shall be at the user's own risk. ©2010, Vicwest – All rights reserved

vicwest

VW00153EN01/11

CLADDING

2-2/3" x 7/8" CORRUGATED

Imperial

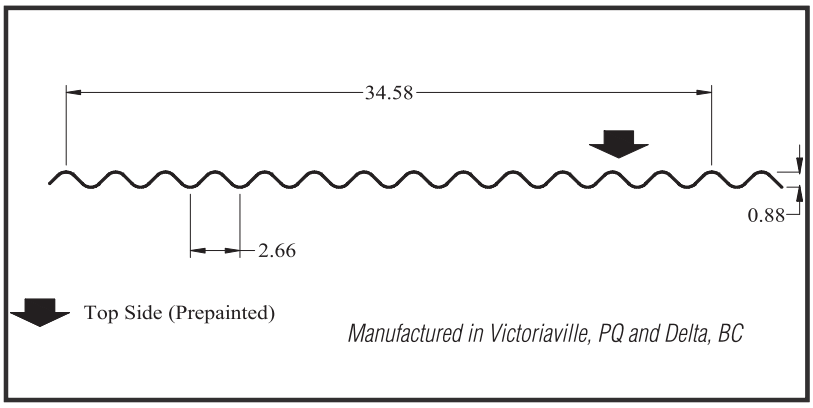

Manufactured in Victoriaville, PQ and Delta, BC

LIMIT STATES DESIGN

PHYSICAL PROPERTIES

(PER FOOT WIDTH) In accordance with CSA Specification S136-07

Base Steel Nominal Thickness (inches)	Nominal Thickness Z275 Coating (inches)	Mass with Coating (lb/ft²)	Section Modulus		Moment of Inertia	Factored Resistance			
						Moment		Reaction	
			Midspan (inches³)	Support (inches³)	Midspan (inches⁴)	Midspan (lb-in)	Support (lb-in)	Exterior (pounds)	Interior (pounds)
0.018	0.020	1.120	0.0506	0.0506	0.0217	1502.8	1502.8	-----	-----
0.024	0.026	1.448	0.0671	0.0671	0.0289	1992.9	1992.9	-----	-----
0.030	0.032	1.782	0.0835	0.0835	0.0361	2480.0	2480.0	-----	-----
0.036	0.038	2.116	0.0997	0.0997	0.0434	2961.1	2961.1	-----	-----
0.048	0.050	2.783	0.1309	0.1309	0.0576	3887.7	3887.7	-----	-----

LOAD TABLE

Maximum Specified Uniformly Distributed Load in lb/ft² (psf)

Support Spacing		1-Span Base Steel Nominal Thickness (inches)					2-Span Base Steel Nominal Thickness (inches)					3-Span Base Steel Nominal Thickness (inches)				
		0.018	0.024	0.030	0.036	0.048	0.018	0.024	0.030	0.036	0.048	0.018	0.024	0.030	0.036	0.048
4' - 0"	B	42	55	69	82	108	42	55	69	82	108	52	69	86	103	135
	D	30	39	49	59	79	71	95	118	142	189	56	75	93	112	149
4' - 6"	B	33	44	54	65	85	33	44	54	65	85	41	55	68	81	107
	D	21	28	35	42	55	50	67	83	100	133	39	52	65	79	104
5' - 0"	B	27	35	44	53	69	27	35	44	53	69	33	44	55	66	86
	D	15	20	25	30	40	36	49	61	73	97	29	38	48	57	76
5' - 6"	B	22	29	36	44	57	22	29	36	44	57	28	37	46	54	71
	D	11	15	19	23	30	27	36	46	55	73	22	29	36	43	57
6' - 0"	B		25	31	37	48		25	31	37	48	23	31	38	46	60
	D		12	15	18	23		28	35	42	56	17	22	28	33	44
6' - 6"	B		21	26	31	41		21	26	31	41		26	33	39	51
	D		9	11	14	18		22	28	33	44		17	22	26	35
7' - 0"	B			22	27	35			22	27	35		23	28	34	44
	D			9	11	15			22	27	35		14	17	21	28
7' - 6"	B				23	31				23	31			24	29	38
	D				9	12				22	29			14	17	23
8' - 0"	B				21	27				21	27			22	26	34
	D				7	10				18	24			12	14	19
8' - 6"	B					24					24				23	30
	D					8					20				12	15
9' - 0"	B					21					21				20	27
	D					7					17				10	13

Note

1. Properties and loads are based on Grade 33 Steel with a minimum yield stress of 33,000 psi, and a maximum stress under Factored loads of 29,700 psi.
2. Figures in Row B indicate the load capacity based on strength. Strength capacity B should be checked against [Specified Live Load]+[0.833 x Specified Dead Load].
3. Where cladding is subjected only to wind load, strength values may be increased by 7%.
4. Figures in row D indicate the load capacity based on deflection of 1/180th span. For allowable deflection of 1/90th span, values in Row D can be doubled, but must not exceed the value in Row B. Deflection capacity should be checked against specified Load(s).
5. An * indicates capacity has been reduced to account for web crippling.

In accordance with ongoing efforts to improve our products and their performance, Vicwest reserves the right to change without notice the specifications contained herein.

The contents herein are for general information and illustrative purposes only and are not intended to serve as any type of advice. Every effort is made to ensure the accuracy of the information included in this brochure and it is believed that the information contained herein is accurate and reliable as of the date of publication. Vicwest, however, does not warrant or represent the accuracy or reliability of any information included in this brochure. Any reliance on any information without consultation with Vicwest or a duly authorized representative shall be at the user's own risk. ©2010, Vicwest – All rights reserved

vicwest

VW00153EN01/11

Room 106 south wall 07 46 13 item 2.2

Wall Only

CHANNEL WALL CL 508

Manufactured in Victoriaville, PQ and Stratford, ON

CHANNEL WALL

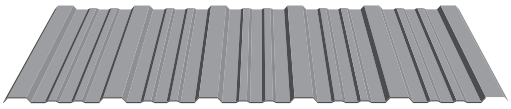

CL 508

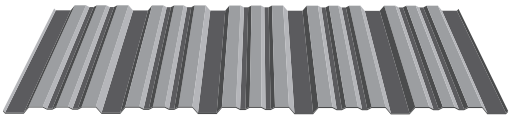



Recommended Overlap Procedure

CHANNEL WALL

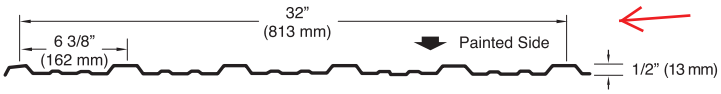



Recommended Overlap Procedure

CL 508 is the reverse of Channel Wall

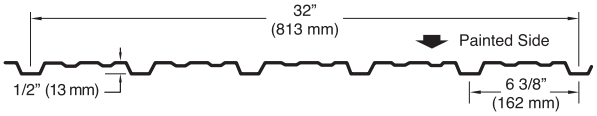

FINISH	MATERIAL GAUGE						LENGTH
	30	28	26	24	22	20	
GALVALUME	•	•	•				Stratford 3' to 36' Victoriaville 1' to 35'
GALVANIZED	•	•	•	•	*	*	Stratford 3' to 36' Victoriaville 1' to 35'
PRE-PAINTED GALVANIZED	•	•	•	•	*		Stratford 3' to 36' Victoriaville 1' to 35'

*Produced in Victoriaville only

color to be vicwest 56076-white-white

STEEL

- Galvanized and Galvalume
- Pre-painted Galvanized WeatherXL™ series (see Vicwest standard colors).

WeatherXL™

MATERIAL SPECIFICATIONS:

The steel used to manufacture CHANNEL WALL or CL 508 sheet meets the following specifications:

- ASTM A792 Grade 33 (latest revision) with designation AZ50 (AZM150) for Galvalume material.
- ASTM A653 SQ, Grade 33 (latest revision) with designation G90 (Z275) for Galvanized material.
- ASTM A653 SQ, Grade 33 (latest revision) with designation AZ50 or Z275 for pre-painted Galvanized and Galvalume material.

CHANNEL WALL and CL 508 profiles were designed with the following criteria in mind: strength, appearance and cost savings.

For wall applications only, their unique form along with their 32" coverage makes them two of the most economical profiles available in the industry. CHANNEL WALL and CL 508 panels combine all the beauty and durability you have a right to expect while allowing you to stay within your budget.

vicwest
BUILDING PRODUCTS

STANDARD TRIMS

N.B.: Other products also available; see Flashings and Mouldings. **Measurement to be determined.*

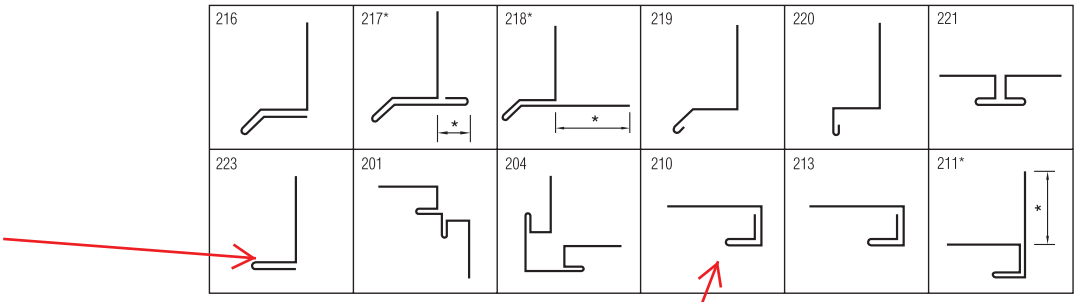

ESTIMATING CHART

Coverage @ 32" (0.813m) per sheet:

No. OF SHEETS	COVERAGE FT.	INS.	M	NO. OF SHEETS	COVERAGE FT.	INS.	M	NO. OF SHEETS	COVERAGE FT.	INS.	M
1	2	8	0.813	16	42	8	13.00	31	82	8	25.20
2	5	4	1.626	17	45	4	13.82	32	85	4	26.01
3	8	0	2.438	18	48	0	14.63	33	88	0	26.82
4	10	8	3.251	19	50	8	15.44	34	90	8	27.64
5	13	4	4.064	20	53	4	16.26	35	93	4	28.45
6	16	0	4.877	21	56	0	17.07	36	96	0	29.26
7	18	8	5.690	22	58	8	17.88	37	98	8	30.07
8	21	4	6.502	23	61	4	18.69	38	101	4	30.89
9	24	0	7.315	24	64	0	19.51	39	104	0	31.70
10	26	8	8.128	25	66	8	20.32	40	106	8	32.51
11	29	4	8.941	26	69	4	21.13	41	109	4	33.32
12	32	0	9.754	27	72	0	21.95	42	112	0	34.14
13	34	8	10.566	28	74	8	22.76	43	114	8	34.95
14	37	4	11.38	29	77	4	23.57	44	117	4	35.76
15	40	0	12.19	30	80	0	24.38	45	120	0	36.57

GABLE SHEET LENGTH

To determine number of sheets required, use preceding table.

Gable End with even number of sheets.
Use ends cut off sheets to cover second gable.

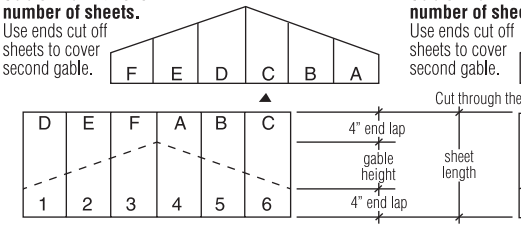

Gable End with odd number of sheets.
Use ends cut off sheets to cover second gable.

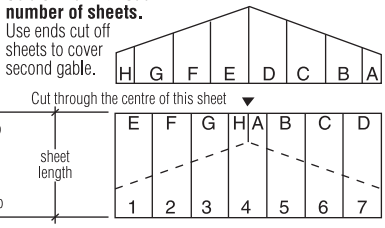

CONVERSION FACTORS

To Convert	Multiply by	To Convert	Multiply by
Inches to millimeters	25.4	Sq. feet to sq. meters	0.0929
Millimeters to inches	0.03937	Sq. meters to sq. feet	10.76
Feet to meters	0.3048	Pounds to kilograms	0.4536
Meters to feet	3.281	Kilograms to pounds	2.205

CSSBI

100% recyclable
ENVIRONMENTALLY FRIENDLY

MCA Metal Construction Association

In accordance with ongoing efforts to improve our products and their performance, Vicwest Building Products reserves the right to change without notice the specifications contained herein.

The contents herein are for general information and illustrative purposes only and are not intended to serve as any type of advice. Every effort is made to ensure the accuracy of the information included in this brochure and it is believed that the information contained herein is accurate and reliable as of the date of publication. Vicwest Building Products, however, does not warrant or represent the accuracy or reliability of any information included in this brochure. Any reliance on any information without consultation with Vicwest Building Products or a duly authorized representative shall be at the user's own risk. © 2015 Vicwest Building Products – All rights reserved

vicwest
BUILDING PRODUCTS

VW00179EN03/15

07 46 19 item 2.1
color royal blue QC56081 gauge 22

metal roof systems

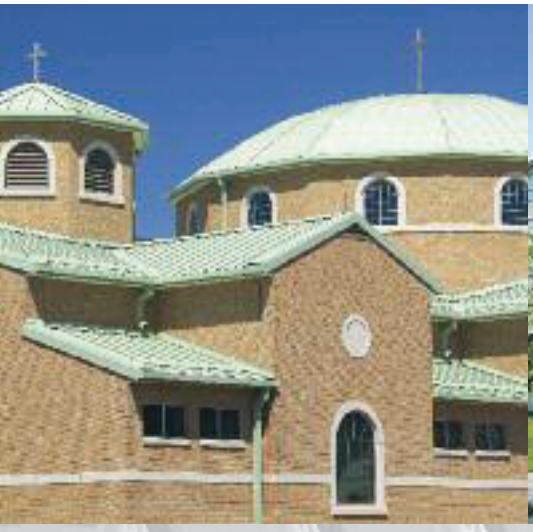



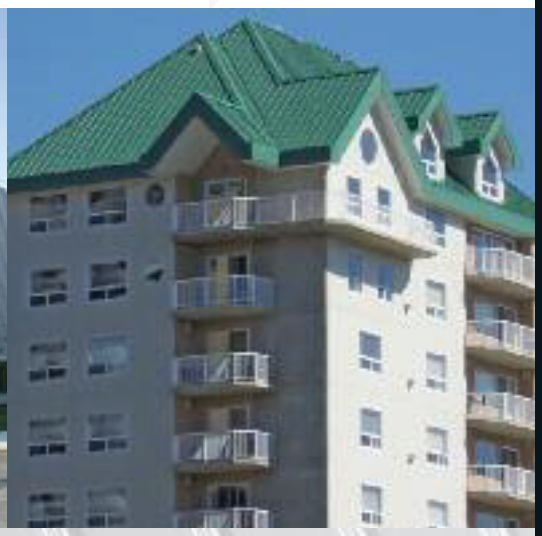

vicwest

Vicwest helps you push
the building envelope

contents

01 Introduction

02 Technical

06 Tradition 100

07 Tradition 150

08 Marquis

10 Prestige

12 TSR

14 Accurib

16 Exposed Fastener

18 Technical

19 Energy Savings & LEED™

20 Vicwest Products

our crowning glory

vicwest roof systems



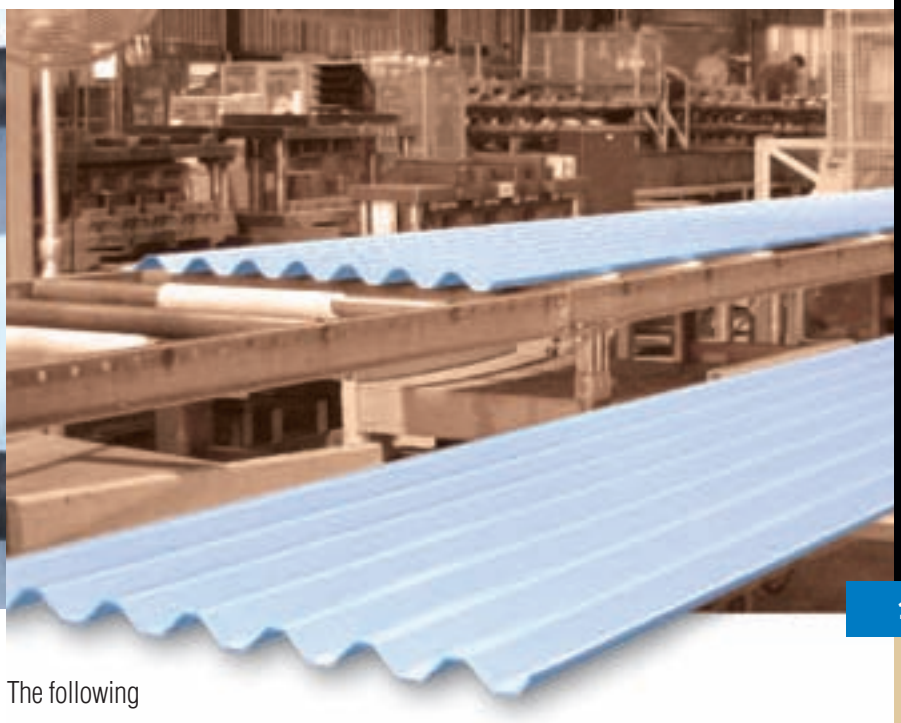

Standing the Test of Time

For over 100 years, Vicwest has been a leading manufacturer of premium quality metal cladding, roofing and decking in Canada, redefining and setting the standards in metal building construction and design. Our metal roof systems are exceptionally functional and architecturally attractive, offering the most contemporary designs for commercial, industrial, institutional and residential buildings.



The following pages will guide you through our comprehensive metal roofing product selection including steel substrates, finishes, profiles and various roof assemblies. We also offer technologically advanced coatings to better provide weather tightness, combat corrosion and fading. These coatings will deliver optimum reflectance for upwards of 40 years.

This is our trusted range of steel building products backed by the considerable knowledge and technical expertise of our service teams across the country. Providing Solutions for the Building Envelope is Our Crowning Glory.

Style with Elegance, Character with Beauty, Unmistakably Durable

A metal roof system by Vicwest adds style beauty & character to your building's design, regardless of size and shape demands.

technical

roofing systems

Images reflect the Marquis profile . Actual components will vary depending on roof profile selected.

Single Skin on Rigid Decking

Vicwest Roof profiles are ideal in applications where a solid deck is available for support. Our roof profiles are adaptable to any solid base material such as plywood, steel deck or concrete. To prevent internal air leakage, which can cause condensation problems, Vicwest recommends the use of a good air barrier over the structural material.

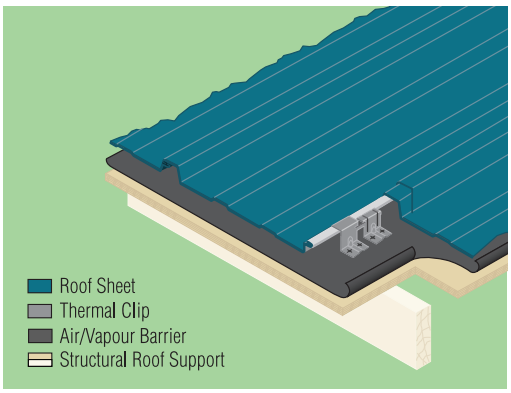

System 1000

For light industrial applications, choose the Vicwest system 1000 as an economical and attractive roof. Vicwest roof products can be used as a single skin or with or without metal building insulation as required.

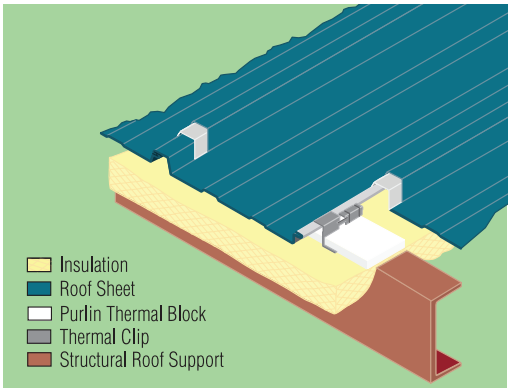

System 2000

The Vicwest system 2000 roof provides an upgraded system with an L800 Liner sheet air vapour barrier and a wider range of insulation values from which to choose.

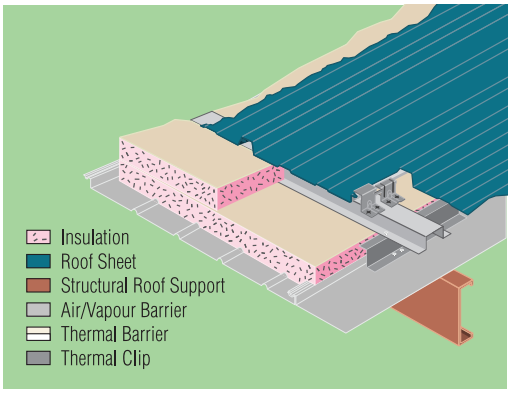

System 3000

The Vicwest system 3000 roof is designed for almost all roofing applications. It combines all the elements needed for a high performance weather tight roof. It integrates all necessary roofing components and provides a single source of responsibility for the roof design and construction. For a more economical approach, where the interior humidity of the building is less than 35%, the thermal barrier may be eliminated and deck fillers installed to support the side and end laps of the air vapour barrier. Caution must be exercised to ensure that humidity conditions during construction also remain below this level.

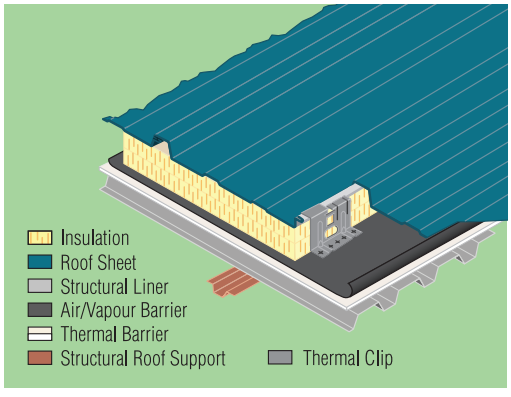

technical

roof systems & corresponding components

	Roof System			
Major Components	Single Skin	1000	2000	3000
Exterior Panel	✓	✓	✓	✓
Panel Clip	✓	✓	✓	✓
Metal Building Insulation		✓		
Semi Rigid Insulation			✓	
Rigid Insulation				✓
Subgirt Clip System			✓	
L800 Liner			✓	
Asphaltic Air/Vapour Barrier	✓			✓
Gypsum Board (optional)				✓
Structural Roof Deck				✓

System Product	Single Skin	1000	2000	3000
Tradition 100	✓			✓*
Tradition 150	✓			✓
Marquis	✓	✓	✓	✓
Prestige	✓			✓*
TSR	✓	✓	✓	✓
Exposed Fastener	✓	✓	✓	✓*

*special precautions must be taken, please contact a Vicwest representative

Photo:
Private 10,000 sq. ft. airplane hangar and shop, Ilderton, Ontario. Vicwest roofing is QC6080 bright red for easy identification from the air.





technical

system products reference chart

	Tradition 100	Tradition 150	Marquis 450
	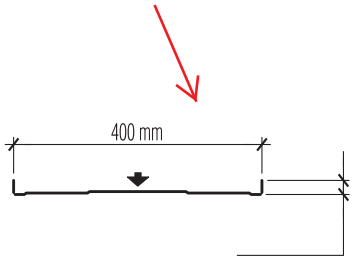	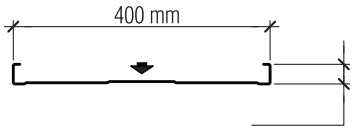	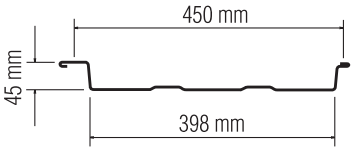
Panel Width Minimum Area Required	400 mm (15.75") 500 mm (19.68") *	400 mm (15.75") 500 mm (19.68") *	450 mm (17.72")
Minimum Length	1.2 m (4'-0")	1.2 m (4'-0")	1.2 m (4'-0")
Maximum Length	12.2 m (40'-0")	12.2 m (40'-0")	12.2 m (40'-0")
Curve Over Length	✓		
Mechanically Seamed		✓	
Requires Solid Substrate	✓	✓	✓
Structural Spanning Capabilities		✓	✓ Snap Cap Required
No Exposed Fasteners	✓	✓	✓
Minimum Slope / Degree	3 in 12 14.04˚ 1 in 12 4.77˚ (Additional Water Barrier)	1 in 12 4.77˚	2 in 12 9.46˚ 1 in 12 4.77˚ (Optional Snap Cap)

*Asterics represent Imperial dimensions

Prestige	TSR	Accurib™ optional	Exposed Fastener optional
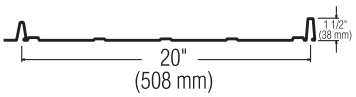		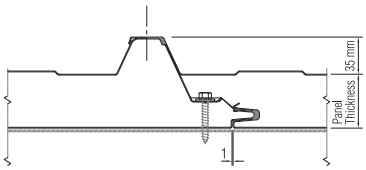	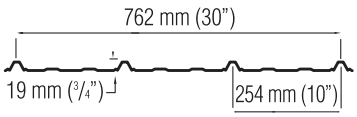
500 mm (19.68") 400 mm (15.75")	609 mm (24")	1067 mm (42")	Varies
1.2 m (4'-0")	1.2 m (4'-0")	1.5 m (5'-0")	Varies
9.2 m (30'-0")	12.2 m (40'-0")	17.6 m (58'-0")	Varies
			Call for Details
	✓		
✓			
	✓	✓	✓
✓	✓	✓	
3 in 12 14.04˚	1/3 in 12 1.59˚	3 in 12 14.04˚	3 in 12 14.04˚

tradition100

metal roofing system

Creative Flexibility for Unique Design Possibilities

Distinctive curved roofs, furnished with the Tradition 100 profile in your choice of material finish make for attractive curved parapets, wall edges or barrel vaulted roofs.

Key Advantages

The Tradition 100 panel with the I-style snap-on cap is designed specifically for straight sloped or curved roof applications over a rigid solid surface. It can be wrapped across its width to follow a contoured surface of wall or curved over its length to form a curved parapet wall edge or a barrel vaulted roof. Tradition 100 can be curved along the sheet length to a radii ranging from a minimum of 1500 mm to full straight.

Roof Installation & Preparation

Available in 400 mm and 500 mm widths the Tradition 100 profile can be installed as a single skin on a solid surface without installation or as an exterior sheet as a fully insulated roof system design (System 3000). Please refer to the System Products Reference Chart on page 4.

The surface to which the Tradition 100 is applied must be a solid, smooth surface, strong enough to provided anchorage for the Tradition 100 Snap Clips. The entire roof surface should be covered using a moisture retardant membrane lapped horizontally, starting at the eaves, before Tradition 100 is applied. Refer to the Tradition 100 Vicwest Design Guide for complete design and installation details.

Side Lap

The 33 mm (1 9/32") I-style standing seam with snap-on cap is used on the Tradition 100 roof profile.



	Tradition 100
Panel Width	400 mm 15.75"
Minimum Area Required*	500 mm 19.68"
Minimum Length	1.2 m (4'-0")
Maximum Length	12.2 m (40'0")
Curve Over Length	✓**
Mechanically Seamed	N/A
Requires Solid Substrate	✓
Structural Spanning Capabilities	N/A
No Exposed Fasteners	✓
Minimum Slope / Degree	3 in 12 14.04 Deg
Additional Water Barrier	1 in 12 4.77 Deg
Metallic Finishes	✓

**field curving required with machine supplied by Vicwest

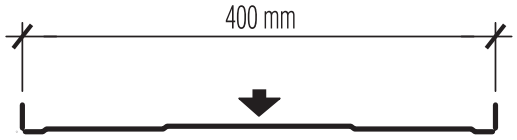

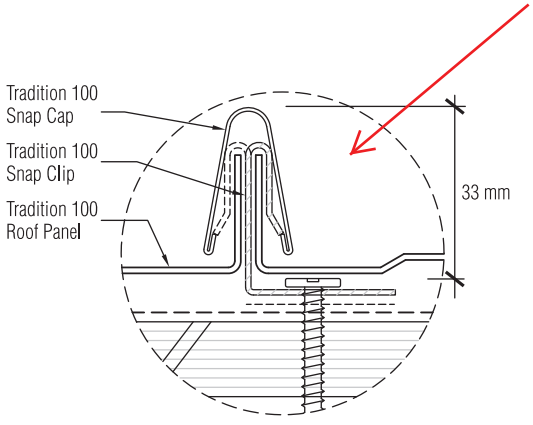

tradition150

metal roofing system

Key Advantages

The Tradition 150 panel with the T-style side lap is recommended for straight slope applications. The Tradition 150 is an excellent choice where the roof design possesses slopes as low as 1 in 12 (4.77 deg.) or where snow build-up and water pooling areas are identified.

Roof Installation & Preparation

Available in 400 mm and 500 mm widths, the Tradition 150 profile can be installed as a single skin, 1000, 2000 or 3000 system application. Moisture retardant membranes are optional with the Tradition 150 system. However, it should be considered as a secondary precaution in potential problematic areas. Please refer to the Tradition 150 Vicwest Design Guide for complete design and installation details.

Side Lap

The Tradition 150 profile uses the T-style mechanically seamed side-lap which is manufactured with a height of 38 mm (1 ½").

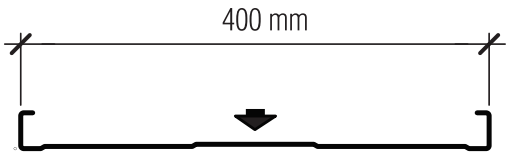

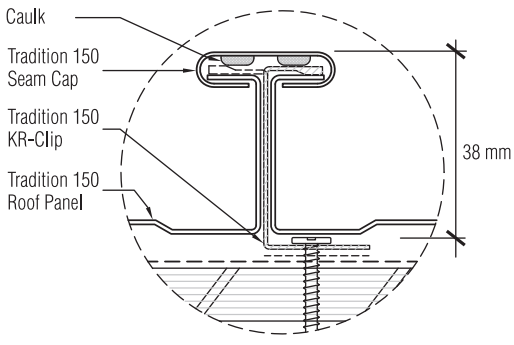



	Tradition 150
Panel Width	400 mm (standard) 15.75"
Minimum Area Required*	500 mm (non-standard) 19.68"
Minimum Length	1.2 m (4'-0")
Maximum Length	12.2 m (40'0")
Curve Over Length	N/A
Mechanically Seamed	✓
Requires Solid Substrate	N/A
Structural Spanning Capabilities	✓
No Exposed Fasteners	✓
Minimum Slope / Degree	1 in 12 4.77 Deg
Additional Water Barrier	Optional
Metallic Finishes	✓

marquis

metal roof system

Uncompromised Style, Matched in Durability

Achieve the distinct board and batten appearance with the Marquis roof system. This complete system delivers superior insulation values and high efficiency for roofs and wall assemblies.

Key Advantages

The Marquis system possesses superior insulating values as a result of our thermal clip mounting system which reduces thermal bridges. Snap cap batten provides a structural advantage, results in a more water-tight system, and presents a traditional board and batten appearance.

Thermal clips come in a variety of depths from flush mount to depths which accommodate up to 254 mm of insulating material. Allowance to have 10" of insulation with thermal clip system.

Gypsum board allows for a thermal barrier within the system, thus reducing thermal bridging. No seamer is required and clips are fastened through the gypsum board to the metal deck below with #14-type AB S.M.S.. The number of screws to be used depends on:

1) Magnitude of wind uplift

2) Spacing of clips

3) Thickness of the inner metal deck

Roof Installation & Preparation

Marquis is a fully engineered system. It combines a number of roofing elements that must be properly integrated to ensure good performance. To make sure the selected roof



and all its components meet the specified performance needs, contact a VICWEST technical representative. All are well-trained in assisting architects and engineers to design with Marquis. Please refer to the Marquis Vicwest Design Guide for complete design and installation details.

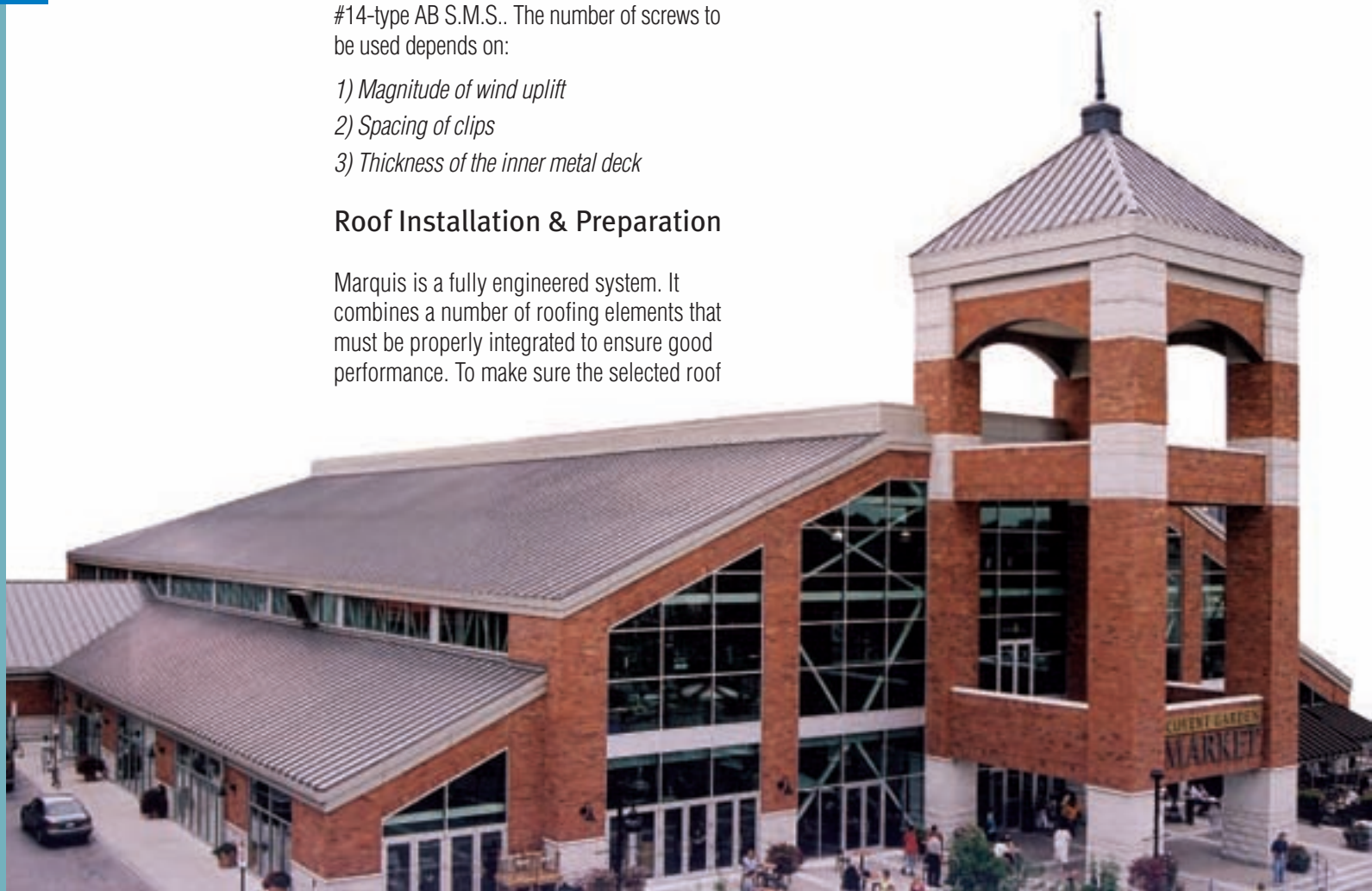

marquis

	Marquis 450
Panel Width	450 mm (17.72”)
Minimum Length	1.2 m (4’-0”)
Maximum Length	12.2 m (40’0”)
Curve Over Length	N/A
Mechanically Seamed	N/A
Requires Solid Substrate	✓
Structural Spanning Capabilities	✓ Snap Cap Required
No Exposed Fasteners	✓
Minimum Slope / Degree	2 in 12 9.46 Deg
Optional Snap Cap / Degree	1 in 12 4.77 Deg

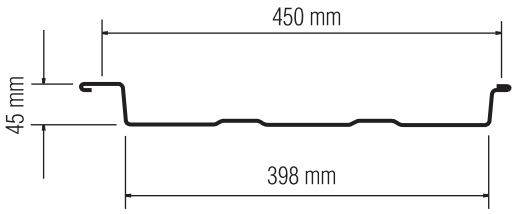

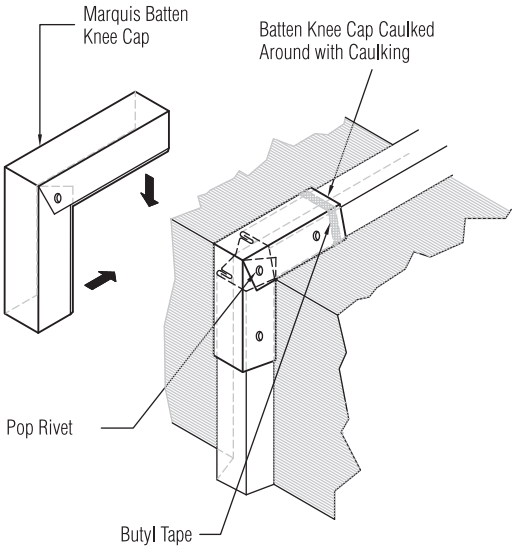

Optional “Snap-Cap” Batten

The optional Marquis snap-cap batten provides a distinctive architectural feature by creating bolder shadow lines. With single skin applications, the snap-cap batten provides increased rigidity. It is also used to provide perfect transitions from roof to fascia. Available in two sizes.

Transitions

With the optional snap-cap batten, Marquis provides a perfect transition from roof to fascia, and even from fascia to soffit.

Snap Cap Depths

50mm (1.968”)
75mm (2.953”)

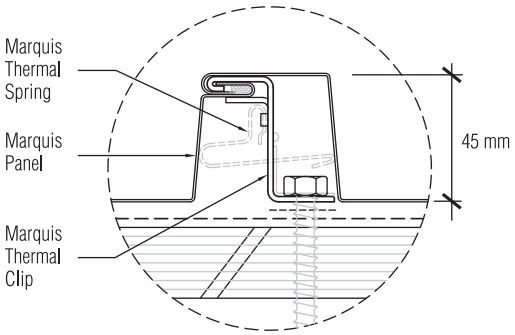



prestige

metal roof system





Impressive for Residential or Commercial Roofs

Accomplish a sophisticated batten style appearance with Prestige. With a name derived from the prestigious style only it can accomplish, Prestige reflects a true artisan quality. A true display of steel roofing made beautiful.

Key Advantages

This classic standing seam profile, mimicking a batten style roofing panel, will enrich the appearance and add value to any commercial or residential roofing project. Prestige is a snap-in/interlocking progressive system. Hidden fasteners mean there is no penetration of the metal, thus preventing water from infiltrating the system. Note that the slotted anchoring location allows for thermal expansion of the panel (see the diagrams on page 11).

Roof Installation & Preparation

It is recommended that Prestige be installed only on single skin applications where a solid base of plywood, steel deck or concrete is available. Ensure the decking area is covered with a good quality air barrier. Prestige uses a hidden fastening and is installed using a snap-in-place design and does not require seamers. Prestige is a cost effective solution that offers trouble free installation. Please refer to the Prestige Vicwest Design Guide for complete design and installation details.

prestige





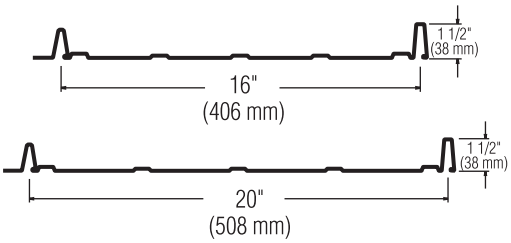

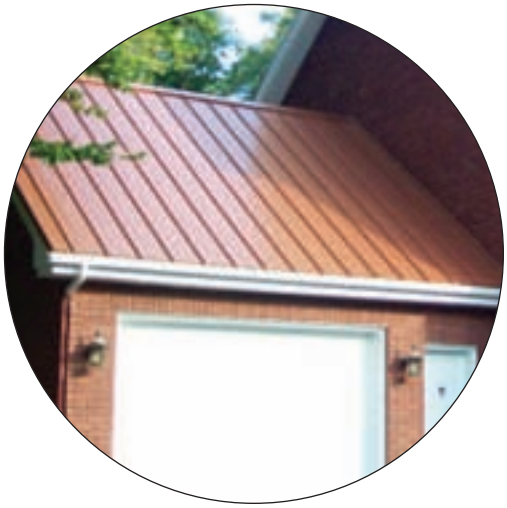

	Prestige
Panel Width	500 mm (19.68")
Minimum Area Required	400 mm (15.75")
Minimum Length	1.2 m (4'0")
Maximum Length	9.2 m (30'0")
Curve Over Length	N/A
Mechanically Seamed	N/A
Requires Solid Substrate	✓
Structural Spanning Capabilities	N/A
No Exposed Fasteners	✓
Minimum Slope / Degree	3 in 12 14.04 Deg

Available in 16" and 20" widths.

TSR

metal roof system

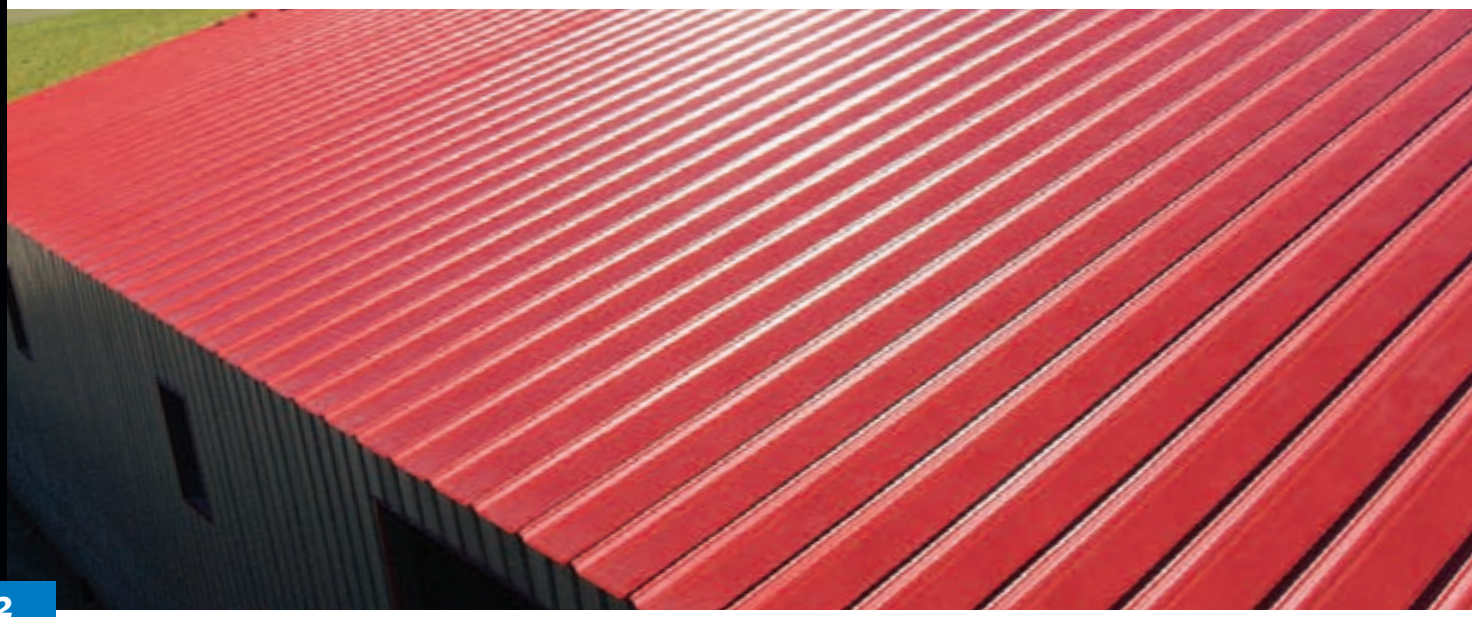

Surprisingly Economical and Completely Functional

This low slope roofing system produces a remarkably attractive roof with its corrugated panel appearance. Completely weather proof and suited for projects in high wind uplift zones, TSR stays secure with incomparable quality, long life, and three separate systems to provide energy efficiency.

Key Advantages

The TSR system demonstrates all weather performance in areas of extreme winds, rains and heavy snow. It is engineered specifically for extremely low slope roof applications common to industrial and institutional buildings.





Roof Installation & Preparation

TSR is one of our most versatile profiles. It can be installed on single skin, or on the 1000, 2000, 3000 systems, allowing for varying degrees of efficiency. TSR is an excellent solution for achieving weather tightness on extremely low slope roofs where pooling can be problematic. Please refer to the TSR Vicwest Design Guide for complete design and installation details.

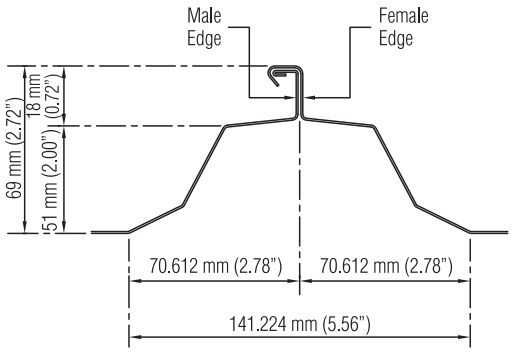

TSR



Testings

TSR has UL class 1-90, ASTM 1592 and FM ratings on both 22 gauge and 24 gauge for purlin spacings of 5 feet (1500 mm). And now the TSR system is one of the few steel roof systems to have been tested under and passed UL 1897, a stringent wind uplift test standard for roof coverings. Vicwest's new rating of 140 pounds per square foot uplift (5.7 kPa) with no visible damage will give owners great confidence in the integrity of their roof system.

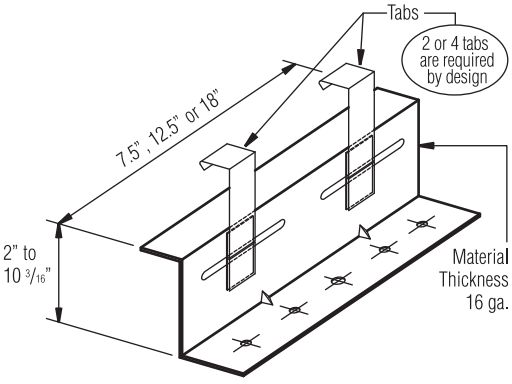

	TSR
Panel Width	609 mm (24")
Minimum Length	1.2 m (4'-0")
Maximum Length	12.2 m (40'0")
Curve Over Length	N/A
Mechanically Seamed	✓
Requires Solid Substrate	N/A
Structural Spanning Capabilities	✓
No Exposed Fasteners	✓
Minimum Slope / Degree	1/3 in 12 1.59 Deg



accurib™

metal roof system



An Aesthetically Pleasing Design

Prestigious, consistent Accurib serves as both a roofing or wall system to easily achieve a uniform and dramatic look throughout an entire building. Highly attractive and thermally efficient, its one-piece lightweight design allows for timely construction.

Key Advantages

VICWEST takes energy savings to the top with its roof panel, ACCURIB. This product features a concealed fastening system that delivers superior energy saving characteristics and aesthetically uniform appeal for wall and roof applications. ACCURIB panels are available with an added factory applied side lap seal to insure a total weather tight system.

Benefiting from its long-life durable steel exterior and high R-value insulation, ACCURIB is a low-maintenance steel faced product that can increase the value and reduce the energy costs of any building. ACCURIB panels maintain a consistent appearance throughout the entire building and are a superb choice for designers seeking a highly attractive, thermally efficient wall or roof system.

Roof Installation & Preparation

Please refer to the Accurib™ Vicwest Design Guide for complete design and installation details.



accurib™



	Accurib™
Panel Width	1067 mm (42")
Minimum Length	1.5 m (5'-0")
Maximum Length	17.6 m (58'0")
Curve Over Length	N/A
Mechanically Seamed	N/A
Requires Solid Substrate	N/A
Structural Spanning Capabilities	✓
No Exposed Fasteners	✓
Minimum Slope / Degree	2 in 12 9.46°
Structural Spanning	2" - 3" - 4"
R Value (7.7 per inch)	15.4 - 23.1 - 30.8

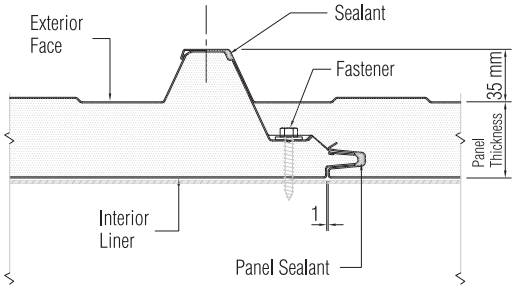

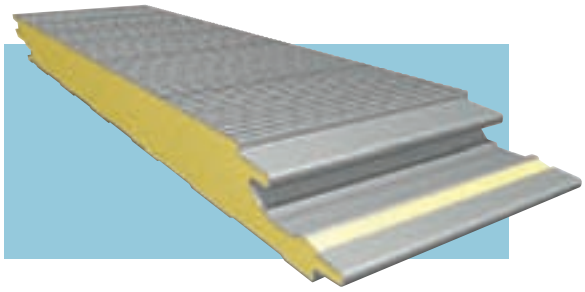

exposed fastener



Our Fasteners Match in Colour too

Installing Vicwest profiles using exposed fasteners makes for a quick installation, therefore becoming a much more cost effective alternative to a concealed fastening approach.

Key Advantages

Exposed Fastening System is an economical choice for roof designs on a firm budget.

Roof Installation & Preparation

Installing Vicwest profiles using exposed fasteners makes for a quick installation therefore becoming a much more cost effective alternative to a concealed fastening approach. Using the exposed fastening system may also be a favourable choice if it is suspected that the building may experience future additions or expansions in which case an exposed fastening system will allow the panel to be easily removed and replaced to accommodate accordingly. Please refer to the Exposed Fastener Vicwest Design Guide for complete design and installation details.

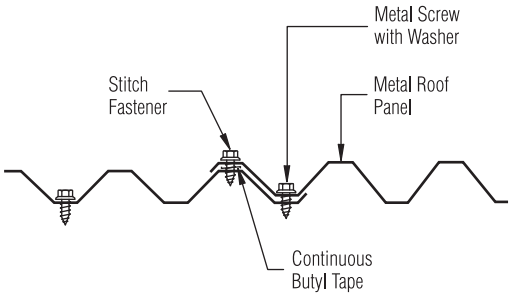

Fasteners

Self-Tapping Screw



14 Type AB

Material: Hardened carbon steel shank with heavy cadmium plating and a chromate finish.

Availability: 3/4" to 1 1/2" long.
Galvanized, Prepainted and Coloured Nylon Head.

Application: Used to fasten exterior and interior profiles, steel or aluminum, to steel and/or wood structural supports.

Self-Drilling Screw



14-10

Material: Hardened carbon steel shank with heavy cadmium plating and a chromate finish.

Availability: 1", 1 3/8" and 2" long. Galvanized, Prepainted and Coloured Nylon Head with or without SkirtNeo washer.

Application: 1" long: Used to fasten exterior and interior profiles, steel or aluminum, to sub-girts and/or steel structural supports up to 1/8" (3mm) thick maximum.

1 3/8"& 2" long: Used to fasten exterior and interior profiles, together with roll-type insulation, to steel structural supports up to 1/8" (3 mm) thick maximum.

exposed fastener

CL 400 — **Victoriaville**

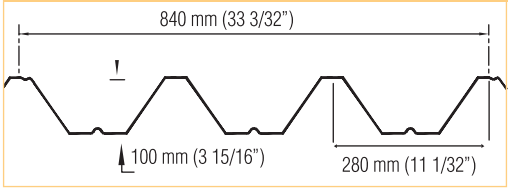

CL 470 — **Oakville**

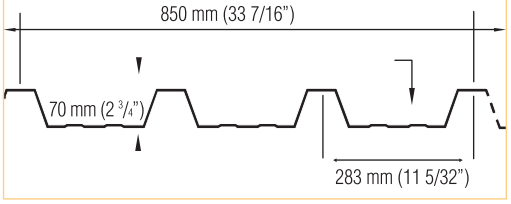

CL 725-R (Shown)* — **Oakville / Victoriaville**

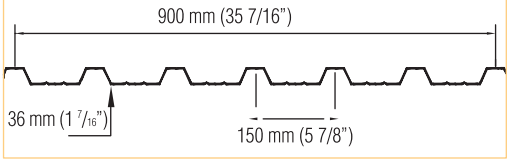

CL 622-R (Shown)* — **Victoriaville**

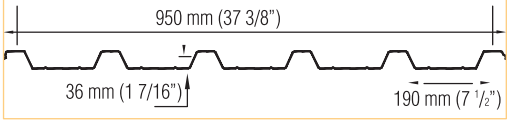

CL 435-T — **Victoriaville**

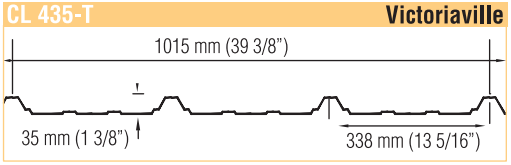

CL 840 — **Oakville / Victoriaville**

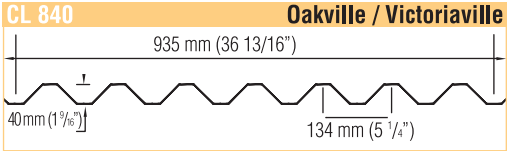

Corrugated 7/8" — **Victoriaville / Surrey**

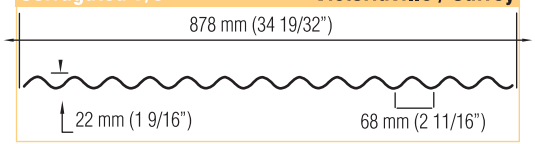

*CL 725-SR (No Stiffener Ribs

*CL 622-SR (No Stiffener Ribs)

	Exposed Fastener
Panel Width	Varies
Minimum Length	1.2 m (4'-0")
Maximum Length	12.2 m (40'0")
Curve Over Length	N/A
Mechanically Seamed	N/A
Requires Solid Substrate	N/A
Structural Spanning Capabilities	N/A
No Exposed Fasteners	N/A
Minimum Slope / Degree	3 in 12 14.04 Deg

CL 938 — **Edmonton**

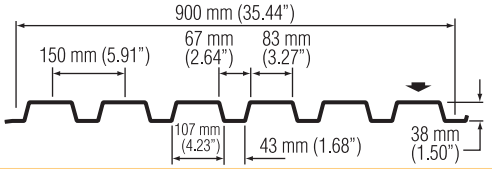

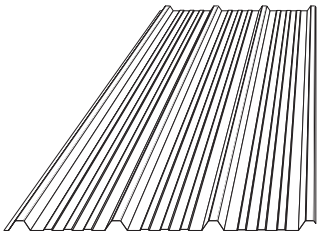

CL 439 — **Edmonton**

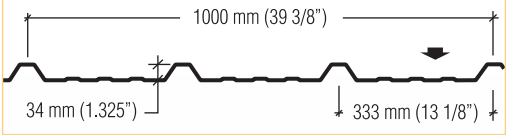

Supervic — **Stratford / Victoriaville**

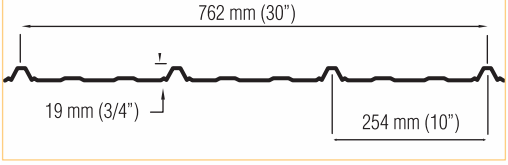

technical

accessories & material finishes

Up to Date Information, Best Practices, *everything needed to work with Vicwest Metal Roof Systems in the most efficient manner, from the product line, to speciality coatings, special projects and accessories. It's all here for a complete roofing system.*

Material Finishes

Z 275 Galvanized or AZ150 Aluminum-Zinc Alloy coatings are recommended for general installations and installations where there is higher than normal humidity.

Barrier Series is a PVC coated steel and can be specified to a variety degrees of thicknesses. It is recommended for areas of high humidity as well as aggressive environmental temperature conditions.

WeatherX® is Vicwest's Silicone Modified Polyester (SMP) coating. With its unique resin system, this SMP topcoat combines a mix of ceramic and inorganic pigments. Selected WeatherX colors possess reflectance values that are Energy Star® qualified, meet current cool roof standards and help towards earning LEED™ certification. In addition to outstanding colour performance, WeatherX is resistant to stains, abrasions and metal marking which allows it to endure the physical stresses of fabrication, transit and construction while minimizing cracking and marring. Vicwest is confident in the WeatherX system and is offering customers an extensive colour palette with exceptional film integrity and color protection. WeatherX is supported by a 40-year limited warranty. Please refer to our *colour chart* for the tint that best matches your design and our *compatibility chart* for available gauges.

Closures

Types:
1. Metal closures to match finish of metal cladding.
2. Foam closures.

Availability:
Both metal and foam closures are available for installation over and under panel for most VICWEST profiles.

Application:
Metal closures are used to fill the voids of the exterior panel at base and top of wall. These closures allow air circulation within the panel between the exterior sheet and insulation to control condensation.

Foam closures are used to seal in weathertight and/or airtight installations.

Translucent Fibreglass Panels are available in most VICWEST profiles.

N.B: For availability and colour selection of all these products, please contact VICWEST.

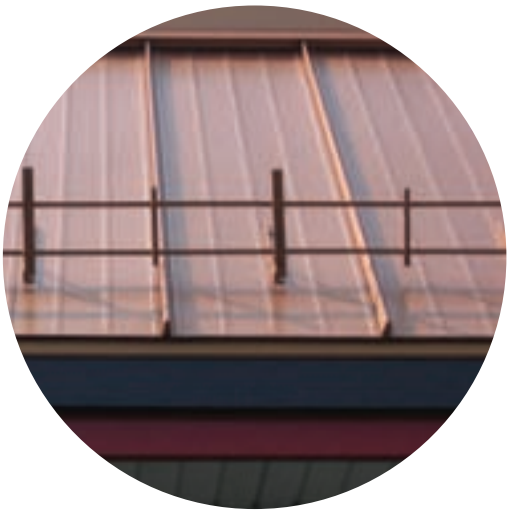

For complete system components including starter strips, snow fences, underlayment etc. contact your closest Vicwest sales office.

energy savings & LEED™



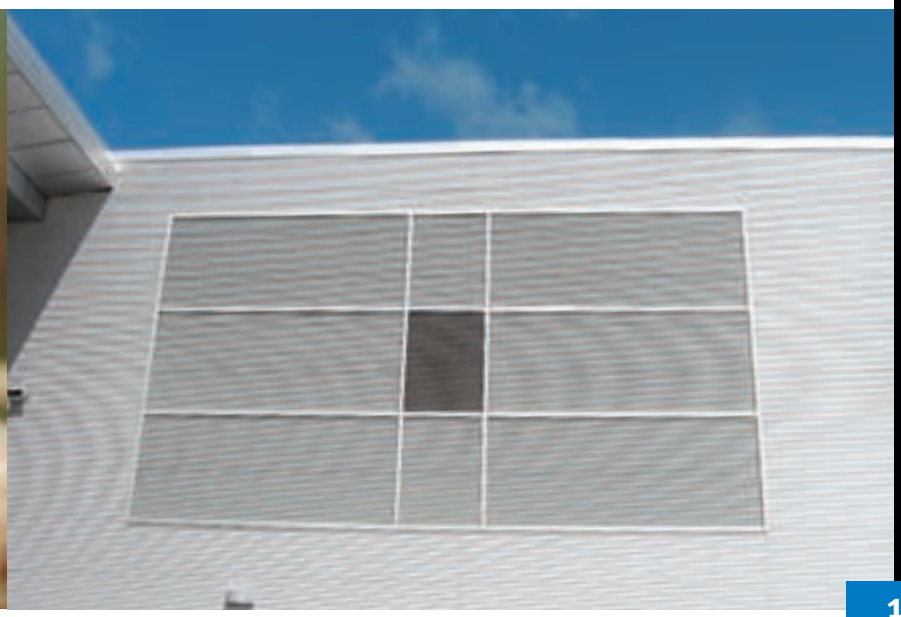

Metal Cladding, Decking and Roofing by Vicwest provides design professionals with the ability to design a building with environmental sustainability in mind. By incorporating Vicwest metal building components into your design, the environment of your build will continue to function properly and meet the needs of those who occupy it without endangering the health and welfare of future generations.

- Vicwest offers a variety of WeatherX® finishes which are Energy Star® qualified. Ask your representative for details.
- When permitted by local building codes, re-roofing applications can require little removal of waste from building sites resulting less in landfills.
- Vicwest Metal Roofing and Cladding Systems are manufactured with recycled content. They are extremely durable, have a long-life cycle and are 100% recyclable at the end of their life.
- Metal Roofing Systems by Vicwest can reduce cooling consumption during summer months. This results in less fossil fuels burning in the atmosphere, reducing smog and pollution.
- Vicwest's manufacturing facilities recycle cardboard, paper, wood and steel. We're always looking for ways to reduce energy consumption.
- Vicwest metal roofing profiles can help designers earn LEED™ certification. Please visit our website at **www.vicwest.com** for recent case studies showcasing these certified buildings.
- When installed on site, Vicwest Metal Roofing and Cladding Systems will not release VOC's (Volatile organic compounds) into the atmosphere. This applies to interior installations.

For further information on how steel can meet LEED® Canada requirements as outlined by the Canadian Build Green Council, please refer to the CSSBI (Canadian Sheet Steel Building Institute) "LEEDING WITH STEEL" handout.

Vicwest is committed to revitalizing Canada's forests and wildlife by contributing to Canadian environmental groups through various eco-gifts and sponsorships.

vicwest products

Vicwest has what you need to succeed

More projects at ***www.vicwest.com***



Steel Wall Systems

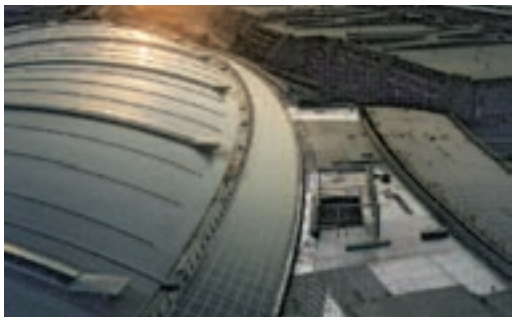

Roof Decks



Steel Roof Systems



Steel Trims & Accessories

Up-to-date Information, Best Practices, *everything needed to work with Vicwest Steel Roof Systems in the most efficient manner, from the product line to speciality coatings, special projects and accessories. It's all here for a complete roofing system.*



Insulated Foam Panels



Endura Wall Panels



Floor Decks



Aluminum Composite Material (ACM) Wall Panels

notes:

Vicwest

Canada-wide locations

You've got us right where you want us
Vicwest has offices coast to coast in Canada for your convenience

East Region

BOUCHERVILLE – Sales Office
1295, rue Newton, bureau 201
Boucherville, QC J4B 5H2

VICTORIAVILLE – Manufacturing & Sales Office
707, boul. Industriel Est C. P. 430
Victoriaville, QC G6P 6T2

KENSINGTON – Manufacturing
P.O. Box 720
Kensington, P.E.I. C0B 1M0

MONCTON – Sales Office
12 Rooney Crescent
Moncton, NB E1E 4M3

Central Region

HAMILTON – Manufacturing & Sales Office
430 Sherman Avenue North
Hamilton, ON L8L 8J6

OAKVILLE – Manufacturing & Sales Office
1296 South Service Road West
Oakville, ON L6L 5T7

STRATFORD – Manufacturing & Sales Office
362 Lorne Avenue East
Stratford, ON N5A 6S4

Western Region

WINNIPEG – Manufacturing & Sales Office
235 DeBaets Street
Winnipeg, MB R2J 4A8

SASKATOON – Manufacturing & Sales Office
3542 Millar Avenue
Saskatoon, SK S7P 0B6

EDMONTON – Manufacturing & Sales Office
18028 - 114 Avenue
Edmonton, AB T5S 2M2

DELTA – Manufacturing
7491 Vantage Way
Delta, BC V4G 1C9

SURREY – Manufacturing
8081 - 132 Street
Surrey, BC V3W 4N5

Please forward any inquiries to:
info@vicwest.com

100%

FSC
SW-COC-1501

July 2009

Contact your Vicwest sales representative

vicwest

www.vicwest.com

Corruguated 22mm	Royal Blue gauge 22				
Number of metal sheet			aire	total	
4	3,850	0,878	3,38	13,52	m2
3	2,800	0,878	2,46	7,38	m2
11	1,500	0,878	1,32	14,49	m2
13	3,730	0,878	3,27	42,57	m2
7	3,320	0,878	2,91	20,40	m2
9	4,140	0,878	3,63	32,71	m2
6	2,600	0,878	2,28	13,70	m2
10	4,890	0,878	4,29	42,93	m2
7	5,165	0,878	4,53	31,74	m2
4	6,000	0,878	5,27	21,07	m2
3	5,700	0,878	5,00	15,01	m2
2	5,150	0,878	4,52	9,04	m2
1	4,575	0,878	4,02	4,02	m2
1	4,255	0,878	3,74	3,74	m2
1	3,930	0,878	3,45	3,45	m2
1	3,580	0,878	3,14	3,14	m2
1	3,300	0,878	2,90	2,90	m2
1	2,900	0,878	2,55	2,55	m2
1	2,760	0,878	2,42	2,42	m2
2	2,570	0,878	2,26	4,51	m2
5	2,390	0,878	2,10	10,49	m2
1	2,675	0,878	2,35	2,35	m2
1	2,830	0,878	2,48	2,48	m2
1	3,000	0,878	2,63	2,63	m2
1	3,175	0,878	2,79	2,79	m2
1	3,390	0,878	2,98	2,98	m2
2	3,650	0,878	3,20	6,41	m2
2	3,275	0,878	2,88	5,75	m2
1	3,460	0,878	3,04	3,04	m2
2	3,825	0,878	3,36	6,72	m2
2	4,175	0,878	3,67	7,33	m2
1	4,400	0,878	3,86	3,86	m2
2	4,615	0,878	4,05	8,10	m2
1	2,150	0,878	1,89	1,89	m2
1	1,825	0,878	1,60	1,60	m2
1	1,550	0,878	1,36	1,36	m2
1	1,300	0,878	1,14	1,14	m2
1	1,000	0,878	0,88	0,88	m2
2	0,750	0,878	0,66	1,32	m2
extra 4	6,000	0,878	5,268	21,072	m2
extra 2	3,000	0,878	2,634	5,268	m2
			total	390,77	m2
				4206,21	pi2

Galvalume gauge 22					
			aire	total	
3	4,950	0,878	4,35	13,04	m2
8	4,500	0,878	3,95	31,61	m2
2	3,300	0,878	2,90	5,79	m2
13	3,840	0,878	3,37	43,83	m2
6	4,275	0,878	3,75	22,52	m2
6	6,620	0,878	5,81	34,87	m2
3	7,700	0,878	6,76	20,28	m2
4	4,000	0,878	3,51	14,05	m2
9	3,950	0,878	3,47	31,21	m2
3	7,315	0,878	6,42	19,27	m2
3	7,990	0,878	7,02	21,05	m2
4	8,930	0,878	7,84	31,36	m2
4	9,900	0,878	8,69	34,77	m2
1	10,600	0,878	9,31	9,31	m2
6	8,500	0,878	7,46	44,78	m2
3	2,850	0,878	2,50	7,51	m2
3	2,525	0,878	2,22	6,65	m2
5	7,810	0,878	6,86	34,29	m2
16	3,730	0,878	3,27	52,40	m2
2	2,450	0,878	2,15	4,30	m2
2	2,740	0,878	2,41	4,81	m2
2	3,330	0,878	2,92	5,85	m2
1	4,680	0,878	4,11	4,11	m2
1	4,830	0,878	4,24	4,24	m2
2	6,480	0,878	5,69	11,38	m2
1	6,650	0,878	5,84	5,84	m2
1	7,225	0,878	6,34	6,34	m2
1	7,400	0,878	6,50	6,50	m2
2	8,110	0,878	7,12	14,24	m2
2	7,815	0,878	6,86	13,72	m2
2	7,400	0,878	6,50	12,99	m2
1	6,975	0,878	6,12	6,12	m2
1	5,825	0,878	5,11	5,11	m2
1	5,450	0,878	4,79	4,79	m2
1	5,050	0,878	4,43	4,43	m2
1	4,700	0,878	4,13	4,13	m2
9	4,825	0,878	4,24	38,13	m2
1	7,830	0,878	6,87	6,87	m2
2	7,700	0,878	6,76	13,52	m2
3	7,025	0,878	6,17	18,50	
extra 4	8,000	0,878	7,024	28,096	m2
extra 2	3,000	0,878	2,634	5,268	m2
			total	707,88	m2
				7619,56	pi2

Red QC56080	gauge26		aire	Total	
3	2,225	0,878	1,95	5,86	m2
2	4,275	0,878	3,75	7,51	m2
2	7,800	0,878	6,85	13,70	m2
extra 1	7,800	0,878	6,85	6,85	m2
			Total	33,91	m2
				365	pi2

Gold QC56070	gauge 24				
2	4,500	0,878	3,95	7,90	m2
2	4,540	0,878	3,99	7,97	m2
2	3,900	0,878	3,42	6,85	m2
2	6,400	0,878	5,62	11,24	m2
extra 1	6,400	0,878	5,62	5,62	m2
			Total	39,58	m2
				426	pi2

Orange QC56063	gauge 24				
2	5,225	0,878	4,59	9,18	m2
2	5,500	0,878	4,83	9,66	m2
extra 1	5,500	0,878	4,83	4,83	m2
			Total	23,66	m2
				254,6	pi2

Tradition 100 (roof)	gauge 22				
15	4,900	0,400	1,96	29,4	m2
extra 2	4,9	0,400	1,96	3,92	m2
			Total	33,32	m2
				358,65	pi2

Muralic white - white	gauge 26				
13	2,500	0,813	2,0325	26,4225	m2
extra 2	2,500	0,813	2,0325	4,065	m2
			Total	30,49	m2
				328,2	pi2

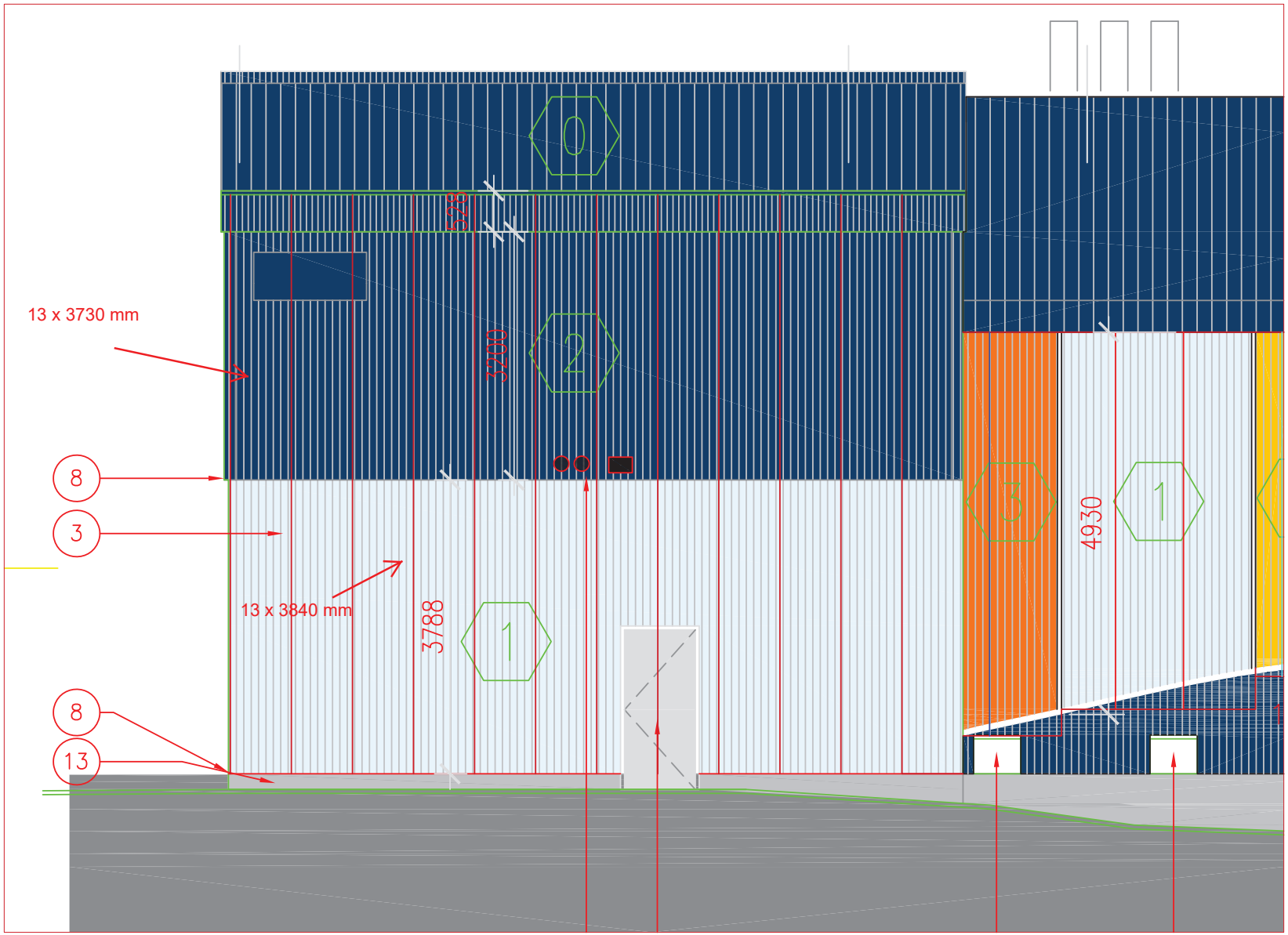
13 x 3730 mm
8
3
13 x 3840 mm
8
13
528
3200
3788
4930
0
2
1
3
1

Elevation North

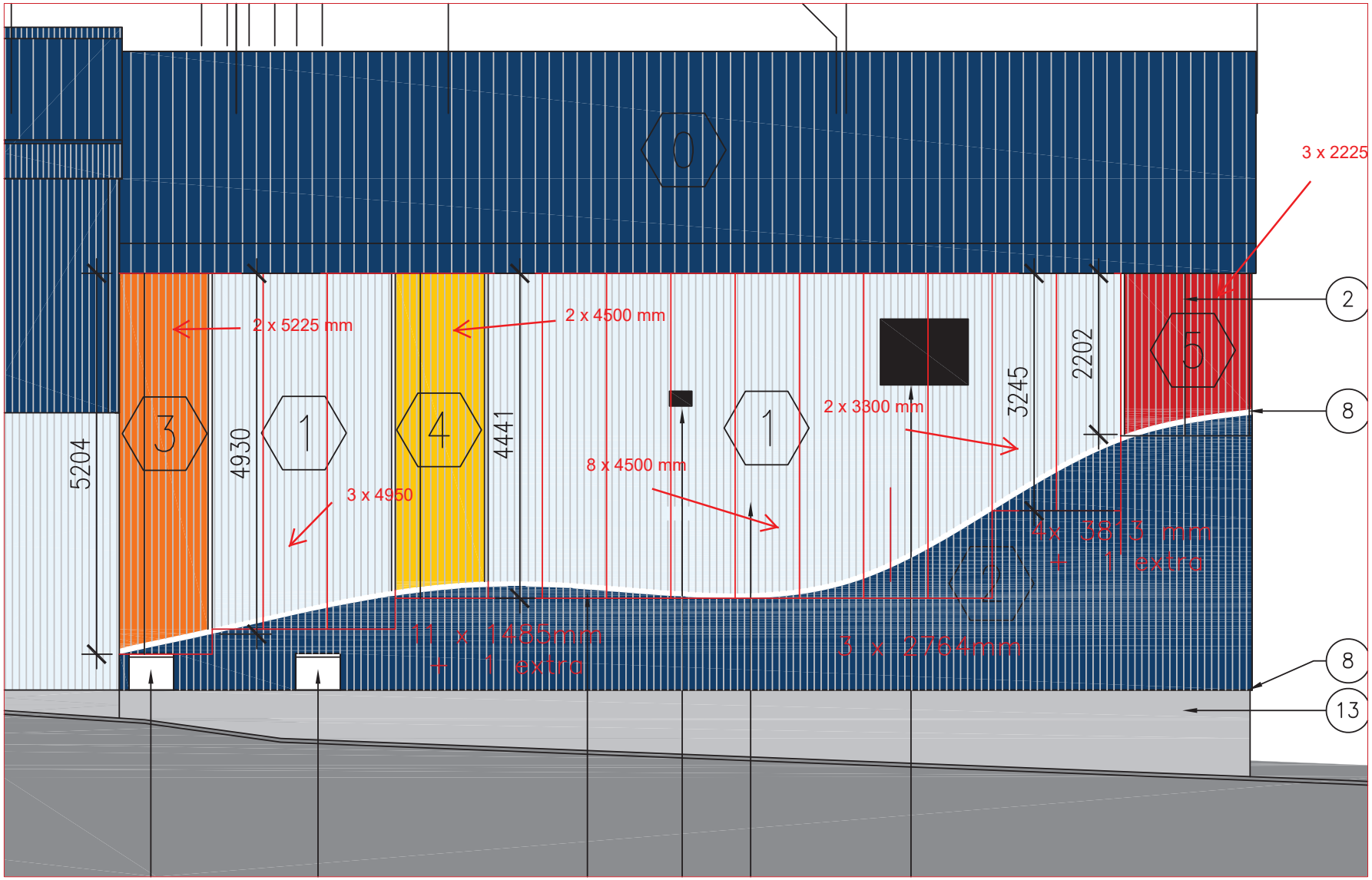

elevation north

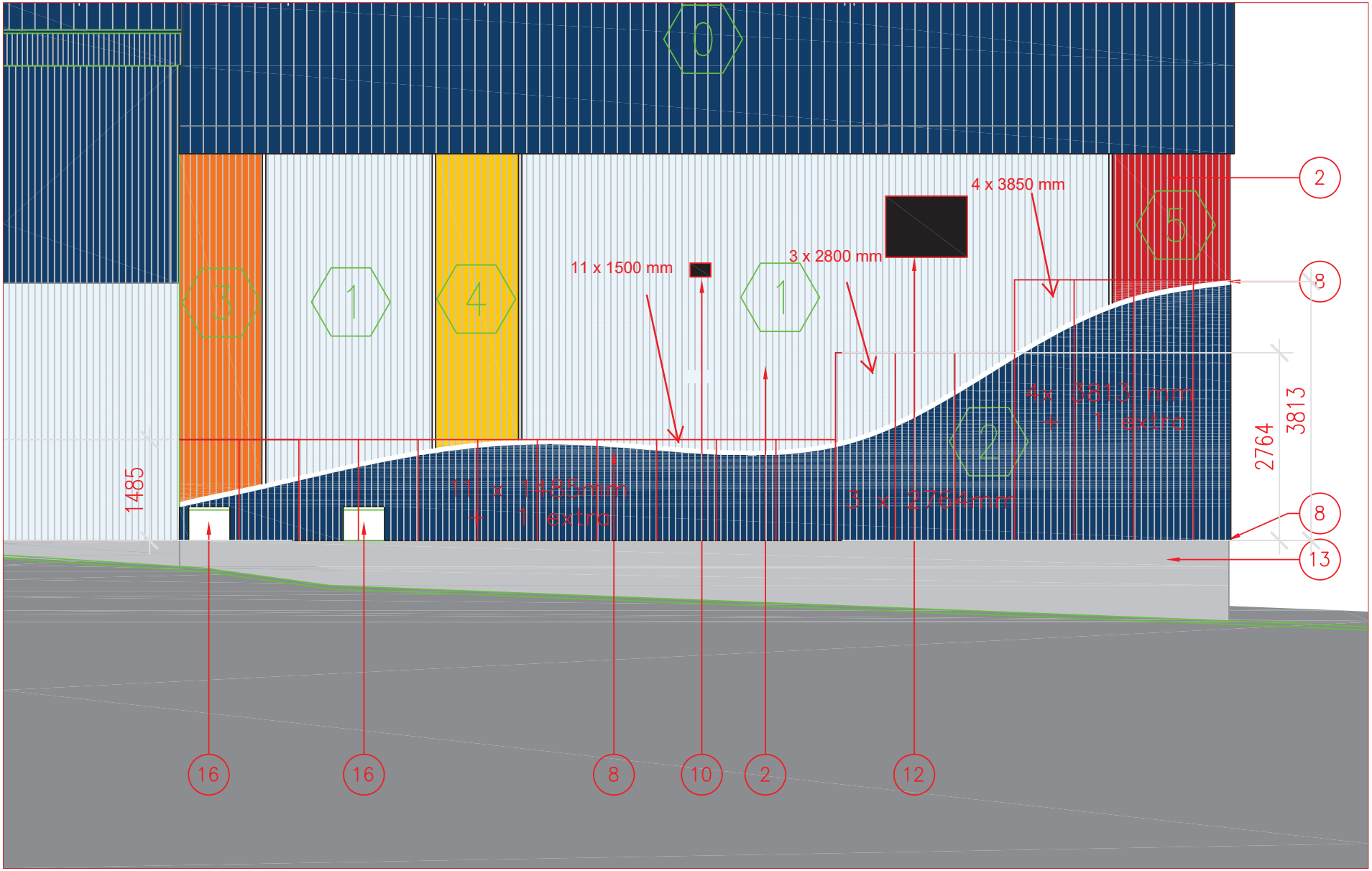

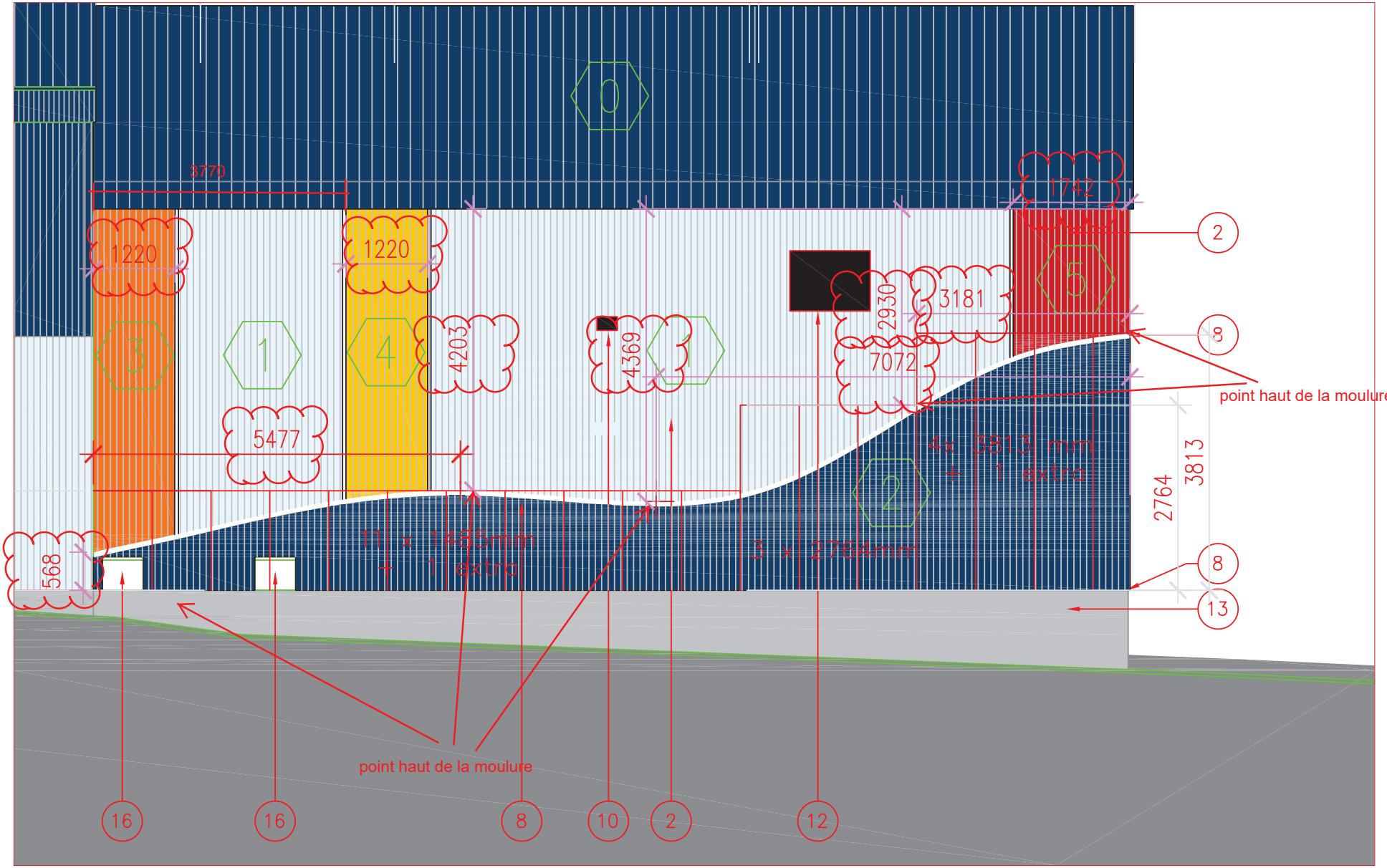
0
3770
1742
2
1220
1220
5
3
1
4
4203
4369
1
2930
3181
7072
8
point haut de la moulure
5477
4x 3813 mm
+ 1 extra
2
2764
3813
568
11 x 1485mm
+ 1 extra
3 x 2764mm
8
13
point haut de la moulure
16
16
8
10
2
12

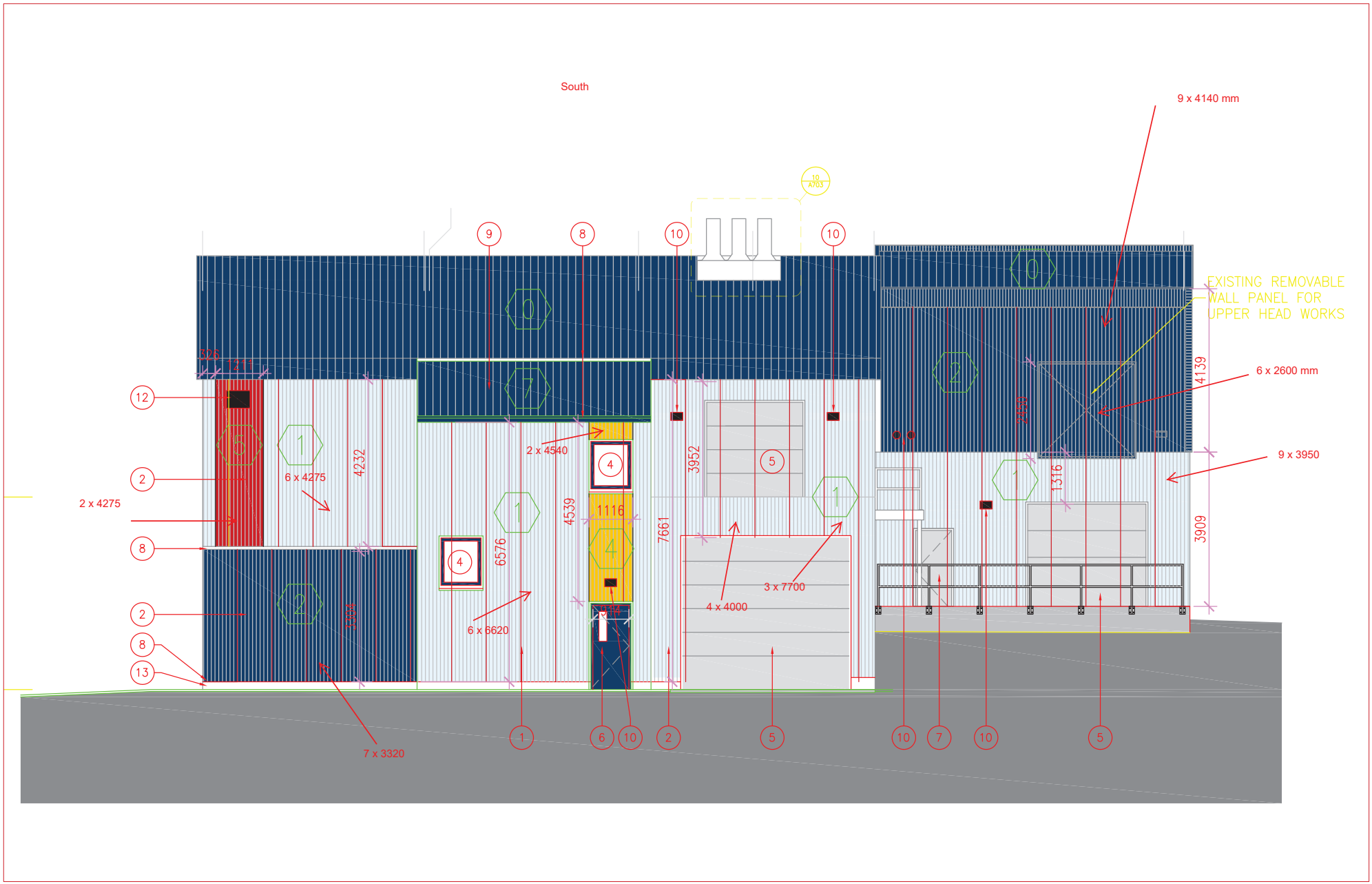
South
9 x 4140 mm
EXISTING REMOVABLE
WALL PANEL FOR
UPPER HEAD WORKS
6 x 2600 mm
9 x 3950
2 x 4275
6 x 4275
2 x 4540
6 x 6620
4 x 4000
3 x 7700
7 x 3320
4232
6576
4539
1116
3952
7661
1316
4139
3909
326
1211
1314
1

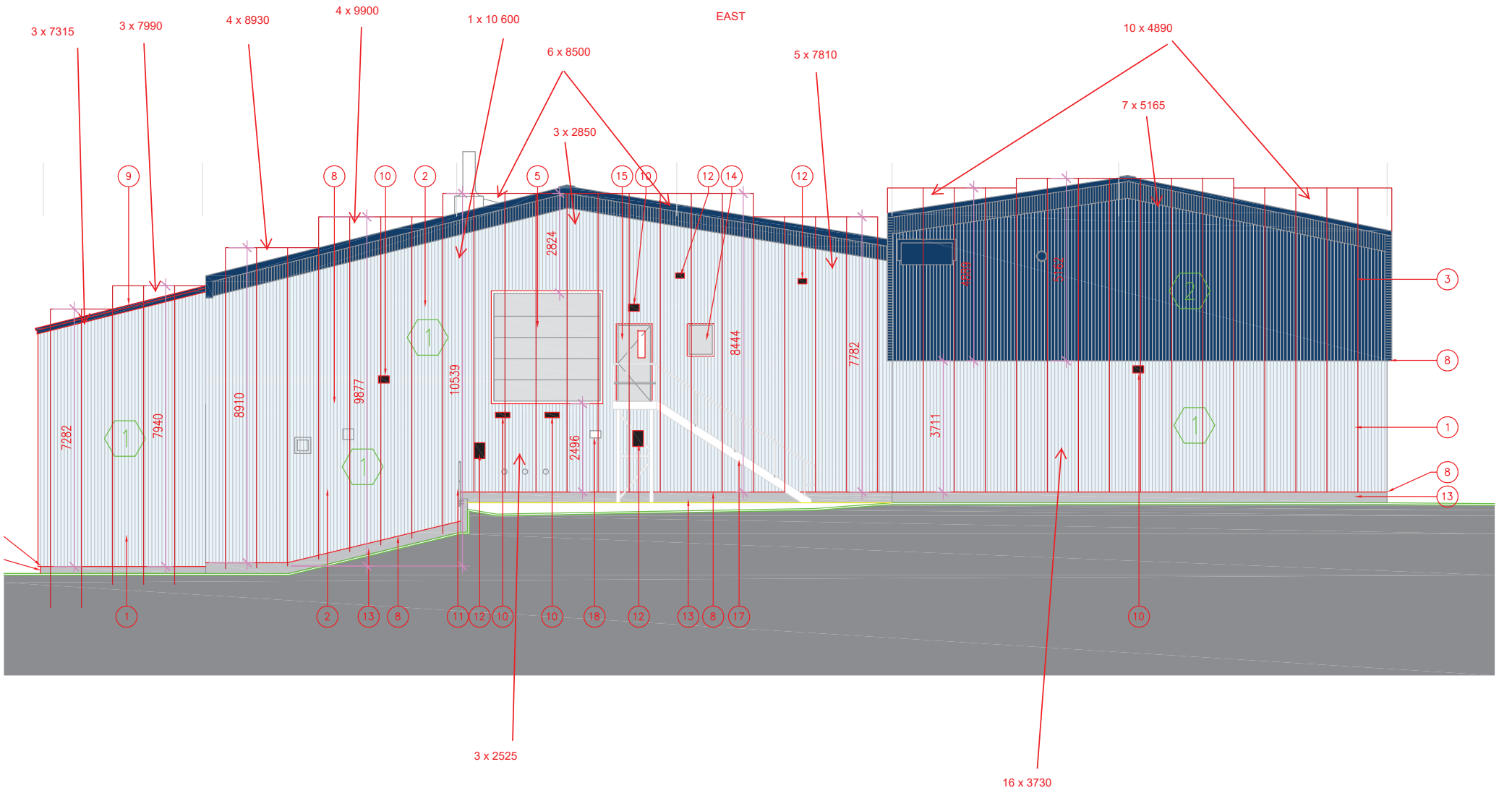

EAST
3 x 7315
3 x 7990
4 x 8930
4 x 9900
1 x 10 600
6 x 8500
3 x 2850
5 x 7810
10 x 4890
7 x 5165
3 x 2525
16 x 3730
7282
7940
8910
9877
10539
2824
2496
8444
7782
3711

Ouest

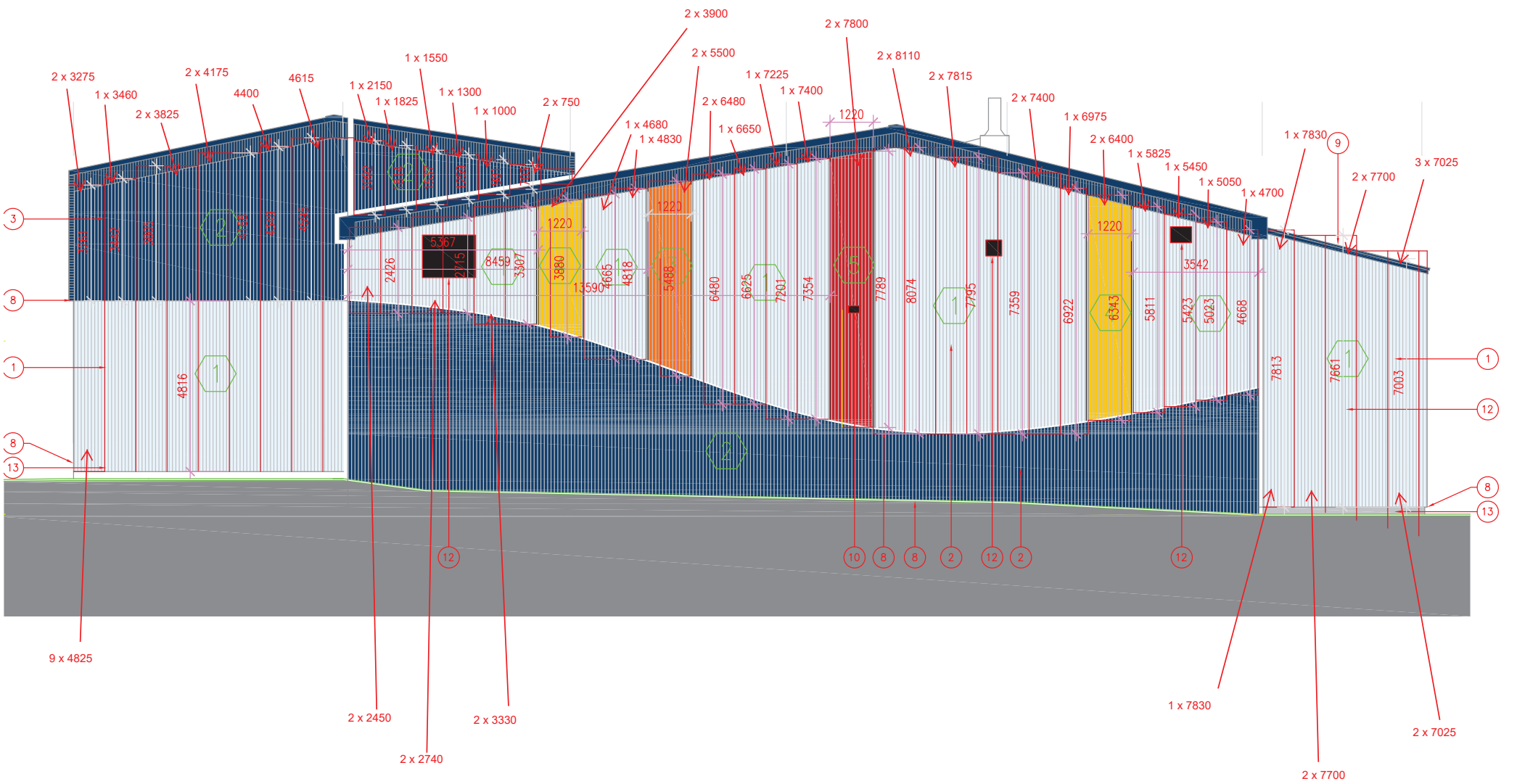
2 x 3275
1 x 3460
2 x 3825
2 x 4175
4400
4615
1 x 2150
1 x 1825
1 x 1550
1 x 1300
1 x 1000
2 x 750
2 x 3900
2 x 5500
1 x 4680
1 x 4830
2 x 6480
1 x 6650
1 x 7225
1 x 7400
2 x 7800
1220
2 x 8110
2 x 7815
2 x 7400
1 x 6975
2 x 6400
1 x 5825
1 x 5450
1 x 5050
1 x 4700
1 x 7830
2 x 7700
3 x 7025
9 x 4825
2 x 2450
2 x 2740
2 x 3330
1 x 7830
2 x 7700
2 x 7025

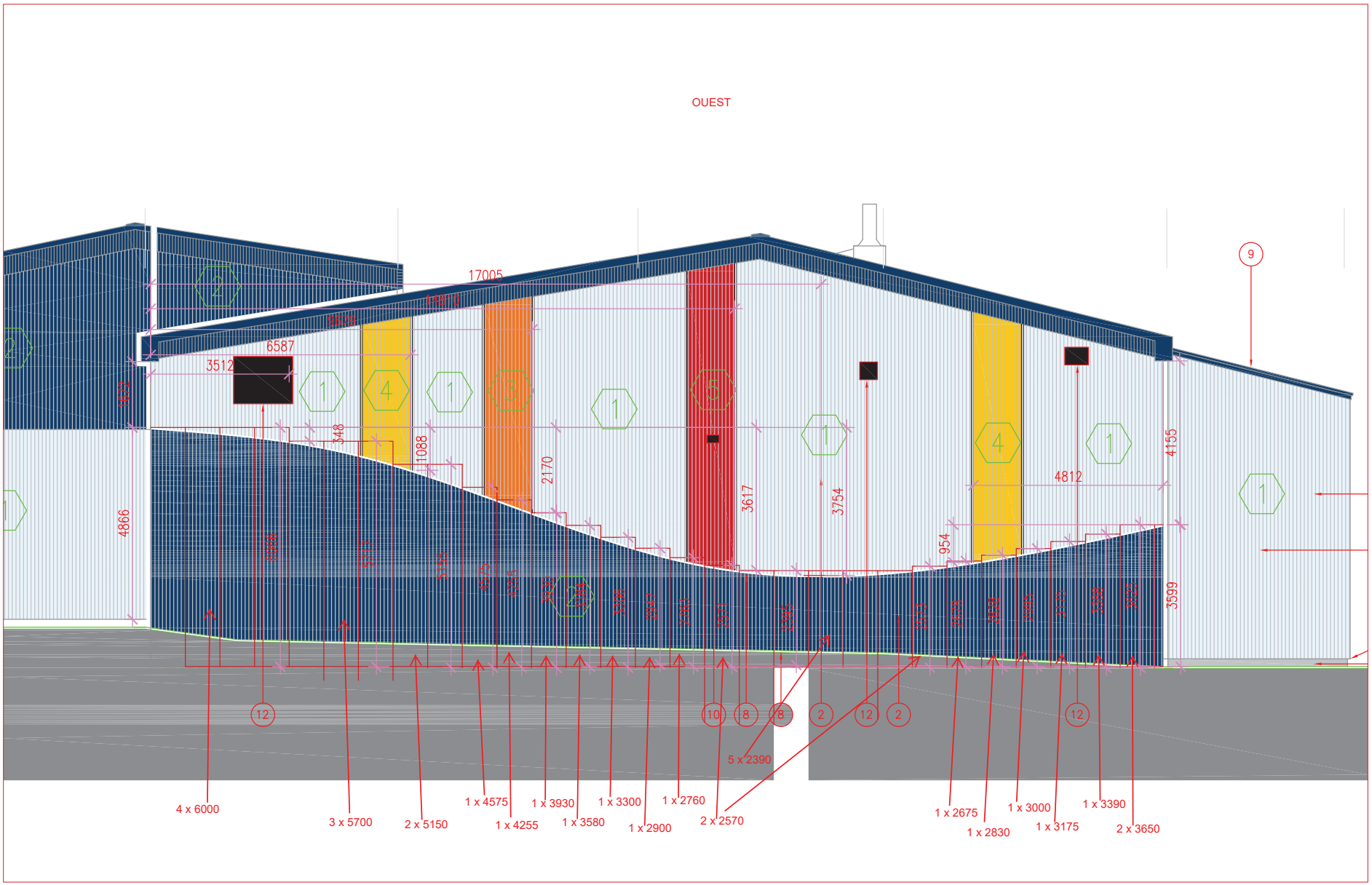
OUEST
17005
14810
6587
3512
4866
348
1088
2170
3617
3754
4812
4155
954
3599
4 x 6000
3 x 5700
2 x 5150
1 x 4575
1 x 4255
1 x 3930
1 x 3580
1 x 3300
1 x 2900
1 x 2760
2 x 2570
5 x 2390
1 x 2675
1 x 2830
1 x 3000
1 x 3175
1 x 3390
2 x 3650


GOLD
56070
Bright Red. 56080
WHITE

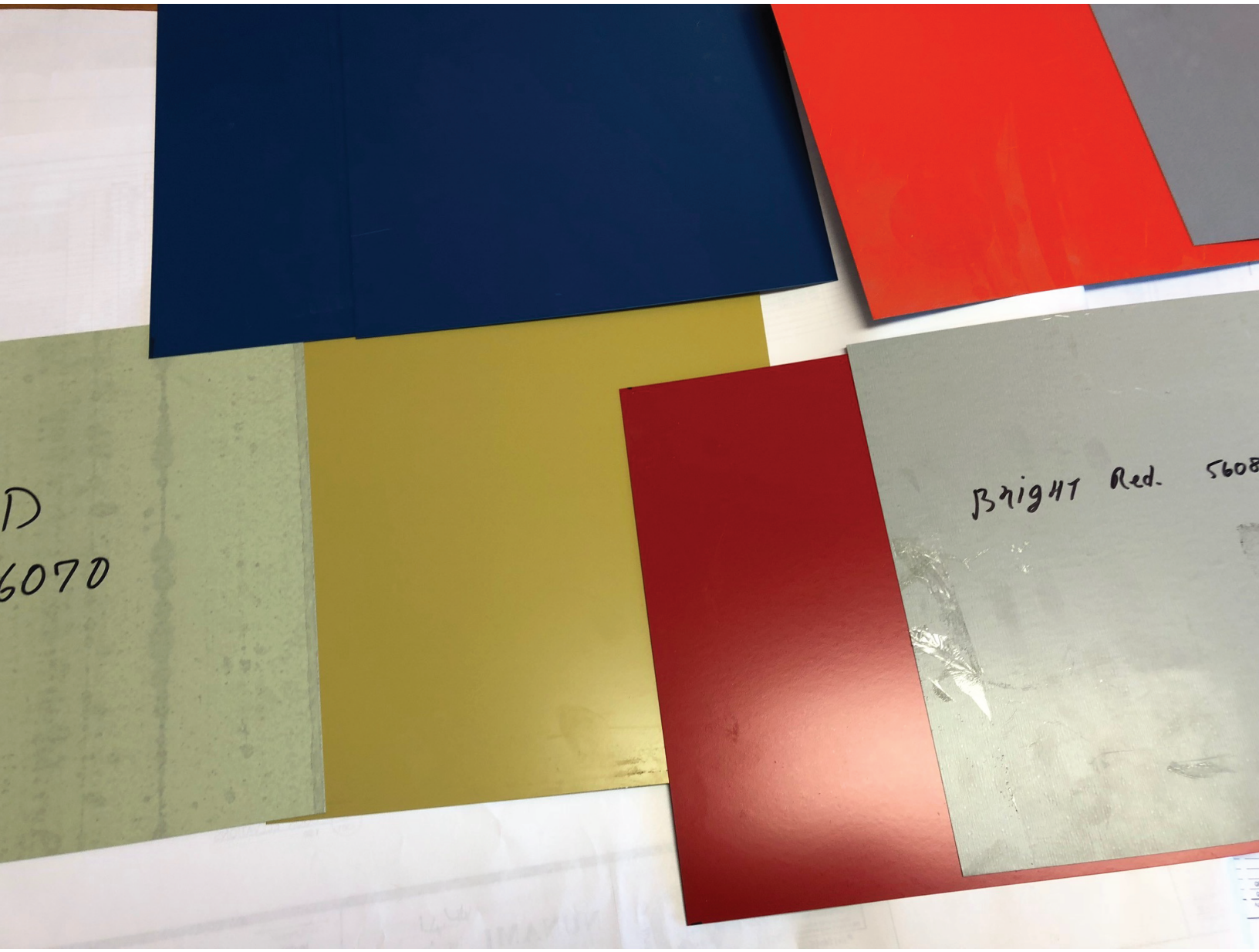
D
6070
Bright Red. 5608



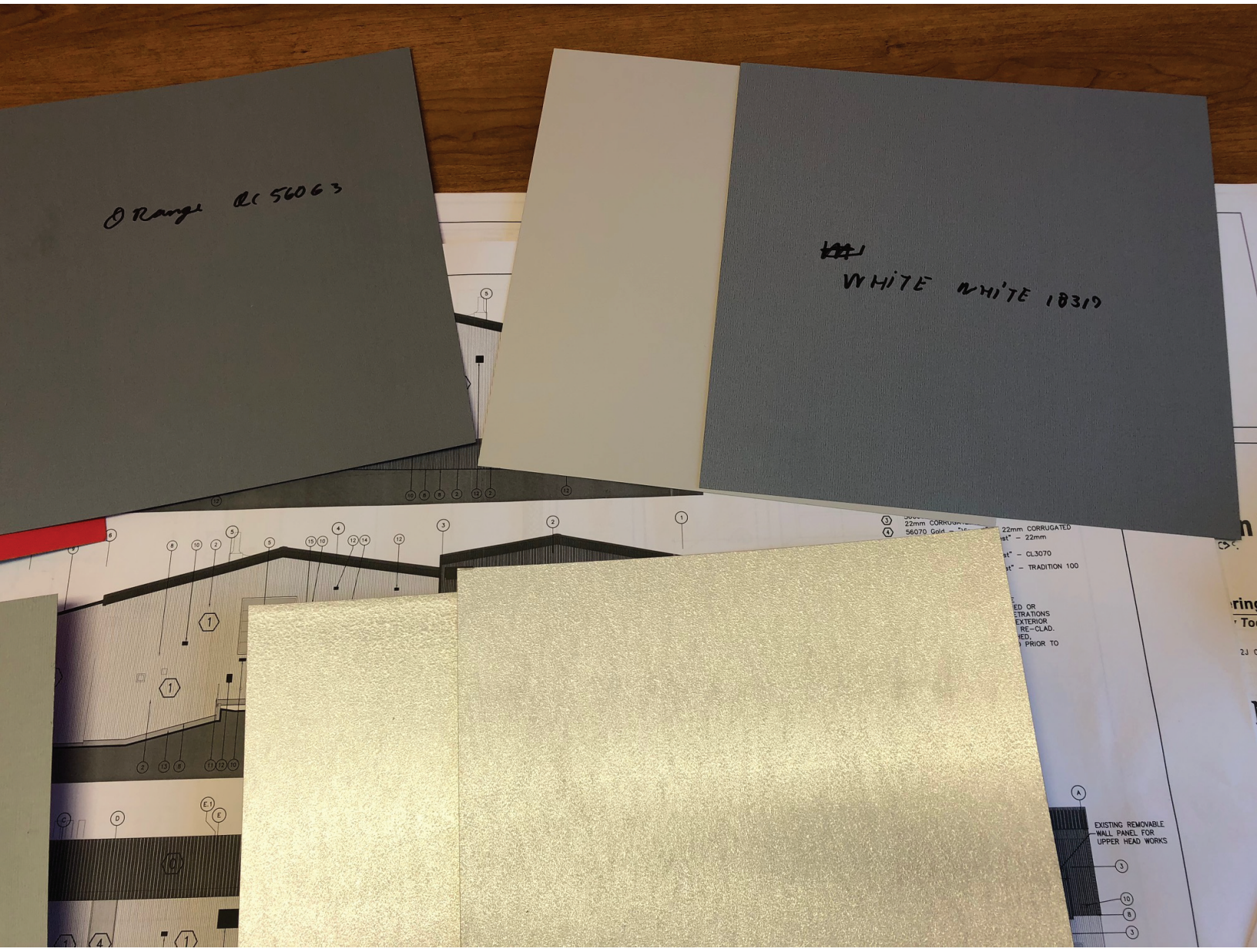
Orange RC 56063
WHITE WHITE 18317
22mm CORRUGATED
56070 Gold
22mm
CL3070
TRADITION 100
EXISTING REMOVABLE
WALL PANEL FOR
UPPER HEAD WORKS

SUBMITTALS IDENTIFICATION SHEET

PROJECT: Wastewater Treatment Plant Upgrade
Iqaluit, Nunavut

CONTRACTOR: Kudlik Construction Ltd, Project 2018-062

Telephone: 867-979-1166

E-mail: srousseau@kudlik.biz

SUBCONTRACTOR:

Person responsible:

Telephone: () E-mail:

PRODUCT SUBMITTED:

☑ As Specified

☐ Alternate

SUPPLIER or MANUFACTURER: QACQ

Person responsible: Marc-André Bourget

Telephone: 450-530-3081 E-mail:

DESCRIPTION OF SUBMITTAL: Metal doors frames and hardware

# of pages:

Reference to drawings:

Reference to specs:

Division: 08 Section: 08 11 00 - 08 36 13 – 08 71 00 – 08 80 50

REMARKS:

REVIEW AND COMMENTS (for use by Consultants):

STANTEC PROJECT #: 110126045

SUBMITTAL # SU002 doors and hardware

This review by Stantec is for general conformance with the design concept of Stantec's design of the:

☑ Architectural ☐ Electrical
☐ Structural ☐ Other
☐ Mechanical

component(s) only and does not mean that Stantec has verified or approves the shop drawing(s). The Contractor remains solely responsible for the shop drawing(s) and this review by Stantec does not relieve the Contractor of the Contractor's responsibility for errors or omissions in the shop drawing(s) or for meeting all requirements of the contract documents. This review does not mean that Stantec approves the detailed design inherent in the shop drawing, responsibility for which shall remain with the Contractor submitting same, nor does this review mean that Stantec accepts any deviation of the shop drawing(s) from the contract documents. The Contractor is responsible for confirming all dimensions and correlating them at the job site, for all construction means, methods and techniques, and for coordination of construction work of all trades, including coordination of all shop drawings.

Stantec

☐ REVIEWED

☑ REVIEWED, AS NOTED

☐ REVISE AND RESUBMIT

☐ NOT REVIEWED

DATE 2018-06-05

BY TFlender

Review of this submission is for compliance with general intent of the contract. This review does not relieve the Sub-Contractor, Supplier or Manufacturer of responsibility for error or omissions in the submission or the responsibility of meeting all requirements of the contract documents. Any deviation from the contract documents initiated by the Sub-Contractor, Supplier or Manufacturer shall be at their sole risk. QUANTITIES AND DETAIL DIMENSIONS ARE THE SUB-CONTRACTORS OR SUPPLIERS RESPONSIBILITY. VERIFY DATA WITH FIELD DIMENSIONS.

SUBMITTAL TRACKING No.: **SU-002** 2018-06-05

SHOP DRAWING

- [x] STEEL WELDED
- [ ] WOOD FRAME
- [x] STEEL DOORS
- [ ] WOOD DOOR
- [x] FINISHING HARDWARE
- [ ] WASROOM ACCESSORIE
- [ ] TOILET PARTITIONS
- [ ] MISCELLANEOUS

PROJECT

CITY OF IQALUIT
WWTP UPGRADE

ARCHITECT

ASSOCIATION OF ARCHITECTS NORTHWEST TERRITORIES
JOHN BERG
PO BOX 1394
YELLOWKNIFE (NT)
X1A 2P1

CONTRACTOR

KUDLIK CONSTRUCTION LTD
1519 FEDERAL ROAD BOX 727
IQALUIT (NU)
X0A 0H0

04-juin-18

Marc-André Bourget
REPRÉSENTANT

HANDING

NOTE: LHA, RHA, LHRA, RHRA,
LETTER "A" DETERMINES ACTIVE DOOR IN A PAIR OF DOORS

RIGHT HAND DOOR (RH)
DOOR OPENS TOWARDS INTERIOR
KEY LOCATED ON THE PUSH SIDE
(OR BACK) OF THE DOOR.

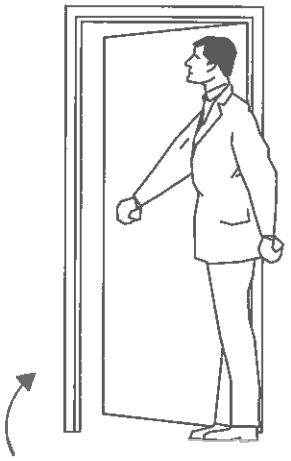

LEFT HAND DOOR (LH)
DOOR OPENS TOWARDS INTERIOR
KEY LOCATED ON THE PUSH SIDE
(OR BACK) OF THE DOOR.

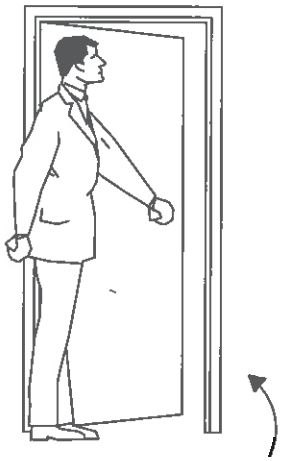

RIGHT HAND REVERSE DOOR (RHR)
DOOR OPENS TOWARDS EXTERIOR
KEY LOCATED ON THE PULL SIDE
(OR FRONT) OF THE DOOR.

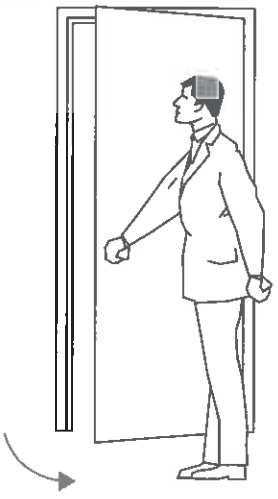

LEFT HAND REVERSE DOOR (LHR)
DOOR OPENS TOWARDS EXTERIOR
KEY LOCATED ON THE PULL SIDE
(OR FRONT) OF THE DOOR.

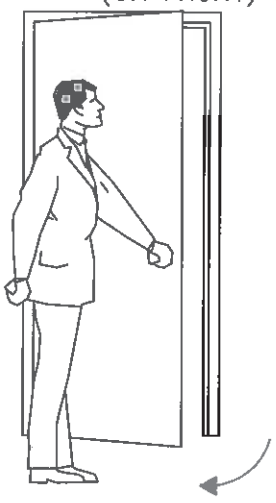

Finish Standards

Description	Symbols	BHMA norms	
		Steel	Brass
Primed for painting	CP	600	
Zinc plated	2GD	603	
Bright brass plated, clear coated	3	632	605
Satin brass plated, clear coated	4	633	606
Satin brass plated, oxidized releived, clear coated	4A	635	608
Satin brass plated, oxidized oil rubbed	4B	634	607
Bright bronze plated, clear coated	9	637	611
Satin bronze plated, clear coated	10	639	612
Satin bronze plated, oxidized releived, clear coated	10A	641	614
Satin bronze plated, oxidized oil rubbed	10B	640	613
Bright nickel plated, clear coated	14	645	618
Satin nickel plated, clear coated	15	646	619
Light oxidized bright bronze clear coated	20	649	623
Dark oxidized, statuary bronze, clear coated	20A	650	624
Bright chromium, plated	26	651	625
Satin chromium, plated	26D	652	626
Aluminium SP28	C28	628, 689	
		Stainless steel	
Satin stainless stell	32D	630	

Handing	Jamb Depth	Frame El./Anch. Door Elevation
RH	156	A1 / 4
RH		5

A1 = Frame elevation 4 = Anchor

5 = Door elevation

QUINCAILLERIE ARCHITECTURALE CENTRE DU QUEBEC INC.

0509239 PROJECT : WWTP

ITEM	LOCATION	HANDING	WALL THICKNESS	FRAME EL. / ANCH. DOOR ELEVATION
D100.1 : EXT. TO STAIR 100				
1,0	STEEL FRAME : THERMALY BROKEN 16GA WELDED	RHR	146	A / 3
1,0	STEEL DOOR : INSULATED POLYUR. 16GA 915 X 2135 X 45	RHR		A
1,0	GLASS : THERMAL UNIT TEMPERED LOW E ARGON 203 X 760 OVER ALL			
GROUP 001				
3,0	HINGE	5BB1 4.5" X 4" NRP 630		
1,0	EXIT DEVICE	XP-98TP 626		
1,0	CYLINDER	20-021C 626 KD-C		
1,0	KEYING	TO DETERMINATE		
1,0	DOOR HOLDER	104S 630		
1,0	DOOR CLOSER	4050 EDA SRI 689		
1,0	KICK PLATE	8400 10" X 34" B-CS 630		
1,0	DOOR SEAL	W-50S X 17' (3' X 7')		
1,0	DOOR SWEEP	W-24S X 36"		
1,0	THRESHOLD	CT-46 X 36"		
1,0	DOOR POSITION SWITCH	679-05HM BLK		
D101.1 : VEST. #1 102 TO MECH. 101				
1,0	STEEL FRAME : 16GA ULC 45 WELDED	RHR	235	A / 5
1,0	STEEL DOOR : 16GA ULC 45 915 X 2135 X 45	RHR		A
GROUP 002				
3,0	HINGE	5BB1 4.5" X 4" NRP 630		
1,0	LOCKSET STORE ROOM	L9080P 06B 630		
1,0	KEYING	TO DETERMINATE		
1,0	DOOR CLOSER	4050 RW/PA SRI 689		
1,0	KICK PLATE	8400 10" X 34.5" B-CS 630		
1,0	DOOR STOP	WS406/407CVX 630		
1,0	DOOR SEAL	W-49 X 17' (3' X 7')		

500

to be verified, typical

?, should be "B" see door schedule

wall thicknesses for each door to be verified, typical

0509239 PROJECT : WWTP

ITEM	LOCATION		HANDING	WALL THICKNESS	FRAME EL. / ANCH. DOOR ELEVATION
D102.1 : STAIR 100 TO VEST.#1 102					
1,0	STEEL FRAME : 16GA ULC 45 WELDED		LHR	235	A / 5
1,0	STEEL DOOR : 16GA ULC 45 915 X 2135 X 45		LHR		A
GROUP 003					
3,0	HINGE	5BB1 4.5" X 4" NRP 630			
1,0	EXIT DEVICE	98L-BE-F 06 630			
1,0	DOOR CLOSER	4050 S CUSH SRI 689			
1,0	KICK PLATE	8400 10" X 34.5" B-CS 630			
1,0	DOOR SEAL	W-49 X 17' (3' X 7')			
D103.1 : VEST.#1 102 TO GENER. 103					
1,0	STEEL FRAME : 16GA ULC 45 WELDED		RHR	184	A / 5
1,0	STEEL DOOR : 16GA ULC 45 915 X 2135 X 45		RHR		A
GROUP 002					
3,0	HINGE	5BB1 4.5" X 4" NRP 630			
1,0	LOCKSET STORE ROOM	L9080P 06B 630			
1,0	KEYING	TO DETERMINATE			
1,0	DOOR CLOSER	4050 RW/PA SRI 689			
1,0	KICK PLATE	8400 10" X 34.5" B-CS 630			
1,0	DOOR STOP	WS406/407CVX 630			
1,0	DOOR SEAL	W-49 X 17' (3' X 7')			
D104.1 :					
1,0	DOOR, FRAME AND HARDWARE BY OTHER				
GROUP 004					
1,0	DOOR POSITION SWITCH	674-OH			
1,0		BALANCE OF HARDWARE BY DOOR SUPPLIER			

?, should be "B"
see door schedule

c/w georgian wire glass light (203x760)

0509239 PROJECT : WWTP

ITEM	LOCATION	HANDING	WALL THICKNESS	FRAME EL. / ANCH. DOOR ELEVATION

D105.1 : SLUDGE 104 TO BOILER 105

1,0	STEEL FRAME : 16GA ULC 45 WELDED	RHR	TO BE CONF	A / 5
1,0	STEEL DOOR : 16GA ULC 45 915 X 2135 X 45	RHR		A

GROUP 002

3,0	HINGE	5BB1 4.5" X 4" NRP 630
1,0	LOCKSET STORE ROOM	L9080P 06B 630
1,0	KEYING	TO DETERMINATE
1,0	DOOR CLOSER	4050 RW/PA SRI 689
1,0	KICK PLATE	8400 10" X 34.5" B-CS 630
1,0	DOOR STOP	WS406/407CVX 630
1,0	DOOR SEAL	W-49 X 17' (3' X 7')

D107.1 :

1,0 DOOR, FRAME AND HARDWARE
EXISTING

GROUP 007

1,0	DOOR POSITION SWITCH	679-05HM BLK
1,0	THRESHOLD	CT-46 X 36"
1,0		REUSE BALANCE OF EXISTING HARDWARE

D107.2 :

1,0 DOOR, FRAME AND HARDWARE
BY OTHER

GROUP 004

1,0	DOOR POSITION SWITCH	674-OH
1,0		BALANCE OF HARDWARE BY DOOR SUPPLIER

0509239 PROJECT : WWTP

ITEM	LOCATION		HANDING	WALL THICKNESS	FRAME EL. / ANCH. DOOR ELEVATION
D108.1 :					
1,0	DOOR, FRAME AND HARDWARE EXISTING				
GROUP 007					
1,0	DOOR POSITION SWITCH	679-05HM BLK			
1,0	THRESHOLD	CT-46 X 36"			
1,0		REUSE BALANCE OF EXISTING HARDWARE			
D108.2 :					
1,0	DOOR, FRAME AND HARDWARE EXISTING				
D200.1 : STAIR 200 TO AREA 201					
1,0	STEEL FRAME : 16GA ULC 45 WELDED		RHR	235	B / 5
1,0	STEEL DOOR : 16GA ULC 45 915 X 2135 X 45		RHR		B
1,0	GLASS : FIRELITE NT 5MM 203 X 760 OVER ALL				
GROUP 003					
3,0	HINGE	5BB1 4.5" X 4" NRP 630			
1,0	EXIT DEVICE	98L-BE-F 06 630			
1,0	DOOR CLOSER	4050 S CUSH SRI 689			
1,0	KICK PLATE	8400 10" X 34.5" B-CS 630			
1,0	DOOR SEAL	W-49 X 17' (3' X 7')			
D202.1 : AREA 201 TO ELECT. 202					
1,0	STEEL FRAME : 16GA ULC 45 WELDED		LHR	184	A / 5
1,0	STEEL DOOR : 16GA ULC 45 915 X 2135 X 45		LHR		A
GROUP 006					
3,0	HINGE	5BB1 4.5" X 4" NRP 630			
1,0	LOCKSET STORE ROOM	L9080P 06B 630			
1,0	KEYING	TO DETERMINATE			
1,0	PUSH PLATE	8200 4" X 16" 630			
1,0	DOOR CLOSER	4050 S CUSH SRI 689			
1,0	DOOR SEAL	W-49 X 17' (3' X 7')			

0509239 PROJECT : WWTP

ITEM	LOCATION		HANDING	WALL THICKNESS	FRAME EL. / ANCH. DOOR ELEVATION
D203.1 :					
1,0	DOOR, FRAME AND HARDWARE BY OTHER				
GROUP 004					
1,0	DOOR POSITION SWITCH	674-OH			
1,0		BALANCE OF HARDWARE BY DOOR SUPPLIER			
D204.1 :					
1,0	DOOR, FRAME AND HARDWARE BY OTHER				
D205.1 : EXT. TO VEST.#3 205					
1,0	STEEL FRAME : THERMALY BROKEN 16GA WELDED		LHR	146	A / 5
1,0	STEEL DOOR : INSULATED POLYUR. 16GA 915 X 2135 X 45		LHR		A
1,0	GLASS : THERMAL UNIT TEMPERED LOW E ARGON 203 X 760 OVER ALL				
GROUP 001					
3,0	HINGE	5BB1 4.5" X 4" NRP 630			
1,0	EXIT DEVICE	XP-98TP 626			
1,0	CYLINDER	20-021C 626 KD-C			
1,0	KEYING	TO DETERMINATE			
1,0	DOOR HOLDER	104S 630			
1,0	DOOR CLOSER	4050 EDA SRI 689			
1,0	KICK PLATE	8400 10" X 34" B-CS 630			
1,0	DOOR SEAL	W-50S X 17' (3' X 7')			
1,0	DOOR SWEEP	W-24S X 36"			
1,0	THRESHOLD	CT-46 X 36"			
1,0	DOOR POSITION SWITCH	679-05HM BLK			
D205.2 :					
1,0	DOOR, FRAME AND HARDWARE EXISTING				

O.H. Door; hardware group 004

0509239 PROJECT : WWTP

ITEM	LOCATION	HANDING	WALL THICKNESS	FRAME EL. / ANCH. DOOR ELEVATION

D206.1 :

1,0 DOOR, FRAME AND HARDWARE
EXISTING

D207.1 :

1,0 DOOR, FRAME AND HARDWARE
EXISTING

D208.1 :

1,0 DOOR, FRAME AND HARDWARE
EXISTING

D209.1 :

1,0 DOOR, FRAME AND HARDWARE
EXISTING

D210.1 :

1,0 DOOR, FRAME AND HARDWARE
EXISTING

D211.1 :

1,0 DOOR, FRAME AND HARDWARE
EXISTING

QACQ

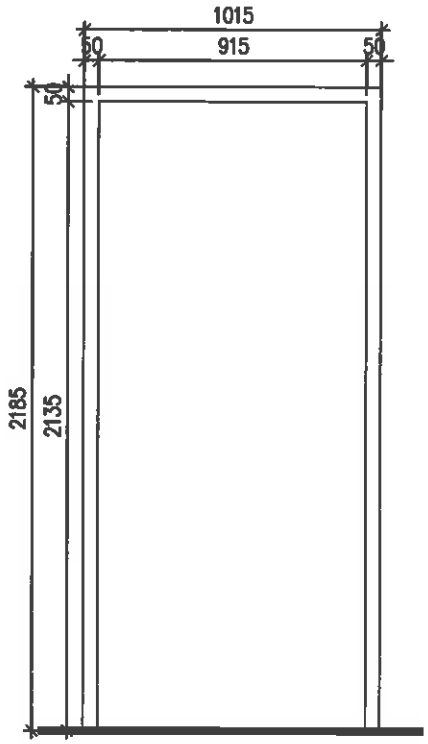
1015
50
915
50
50
2185
2135

A

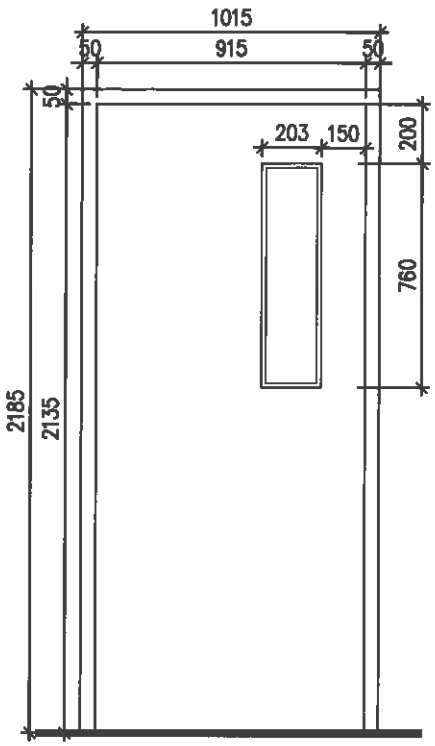
1015
50
915
50
50
203
150
200
760
2185
2135

B

QUINCAILLERIE ARCHITECTURALE CENTRE DU QUÉBEC INC.

PROFILE & ANCHORS TYPE

STANDARD

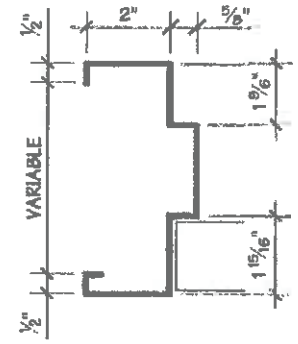

THERMALLY BROKEN

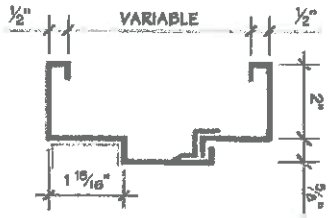

DOUBLE EGRESS

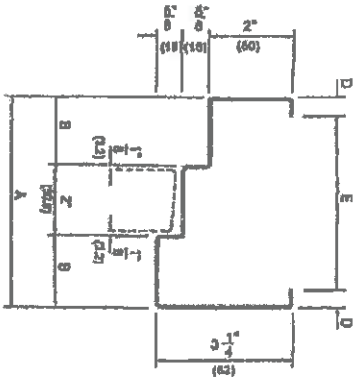

DOUBLE EGRESS HEAD

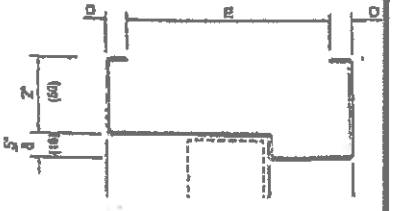

ANC. 1
MASONRY (STD.)

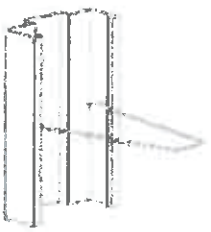

ANC. 2
MASONRY UL 3H.

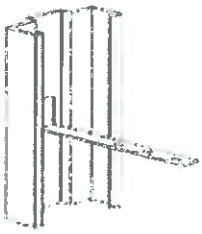

ANC. 3
EXISTING WALL ANCHOR

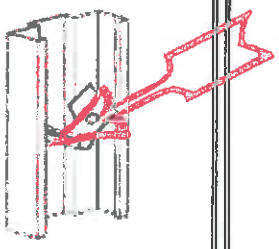



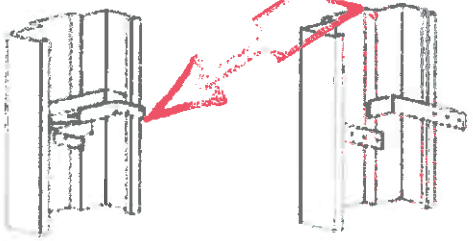

ANC.4
STEEL

ANC. 5
WOOD/STEEL

ANC. 6A
WOOD

TYPE 6 ANCHOR FOR KD FRAME

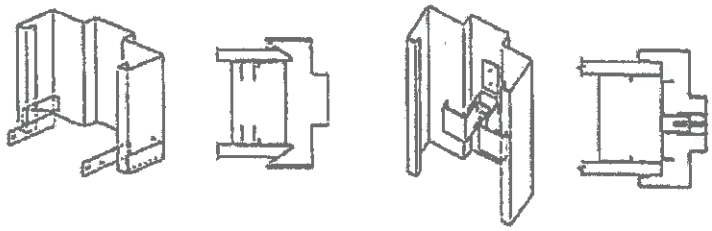

STANDARD FLOOR ANCHOR

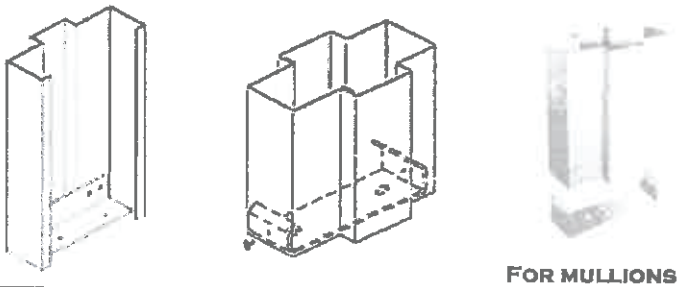

FOR MULLIONS

Welded steel frames

The welded steel frames from the "CS" series are designed to be installed before the construction of the interior partitions. They offer an increased durability allowing a greater longevity.

"CS" SERIES

- The welded steel frames from the "CS" series are manufactured using 18, 16, 14 or 12 gauge galvanized steel;
- The mitred corners are welded using one of the 2 methods:

  Standard > the joints are welded by carrying out a continuous weld bead only on the inside faces of the mitred corners.

  Optional > the joints are welded by carrying out a continuous weld bead on the inside of the frame profile.
- All welded corners are ground smooth and primed to achieve a good looking finish;
- The steel frames have two temporary spreader bars welded at the base of the frame.They have six frame anchors adapted to various types of wall constructions and two floor anchors;
- The single openings have three rubber bumpers per strike jamb and the double openings have two rubber bumpers on the head;
- The frames are prepared to receive the hinges and the strike as specified in the knockdown frame section;
- The hinge reinforcements are protected by mortar boxes when they are installed in concrete block walls.

These frames are available with a 20, 45, 90 or 180 minute fire rating. The hardware preparation and location is in accordance with the standards of the "American National Standard Institute".

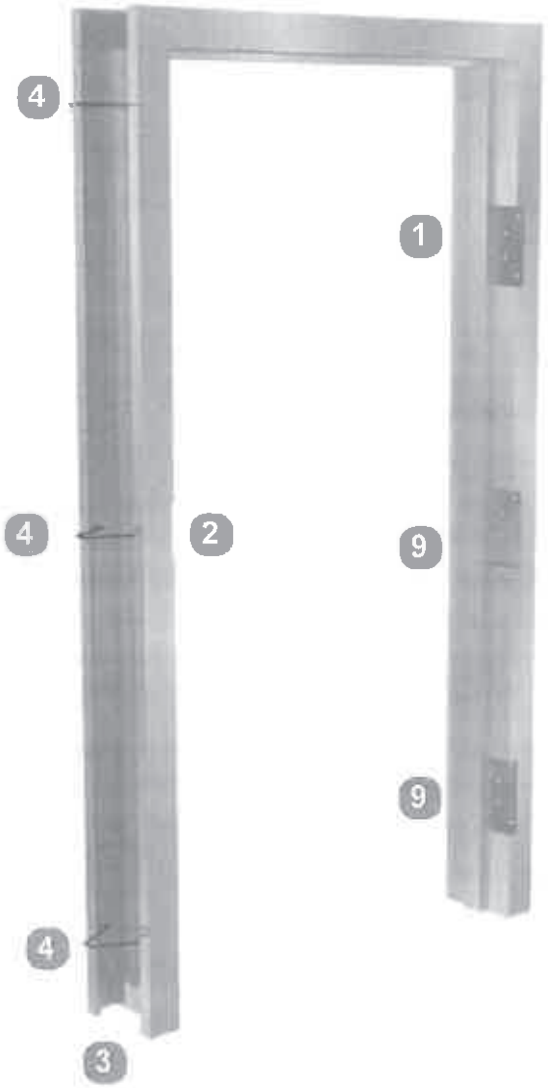

ILLUSTRATION:

1- 10 gauge angular hinge reinforcement
2- ANSI A115.1 strike preparation (ASA)
3- Floor anchor (ATT #3)
4- Masonry wall anchor (ATT #5)
5- Existing wall anchor (ATT #6)
6- Steel stud anchor (ATT #8)
7- Masonry wall anchor (ATT #4)
8- Wood stud anchor (ATT #7)
9- 10 gauge hinge reinforcement



SEVERAL TYPES OF ANCHOR:



N.B.: Other hardware preparations are also available upon request.

Thermal break frames

Métalec manufactures steel frames designed specifically for the exterior openings, adapting perfectly to the climatic fluctuations.

The thermally broken frames are manufactured in two parts separated by a low thermal conductive PVC flashing which eliminates thermal bridge. The two parts are retained together by a Z-shaped steel reinforcement eliminating thermal bond between the exterior and interior door frame faces.

Technical details

- The steel frames are manufactured using 16 or 14 gauge galvanized steel;
- The frames are supplied knockdown or welded;
- The frame anchors are determined according to the type of installation and wall composition;
- The frames are prepared to receive the specified hardware;
- The single openings have three rubber bumpers per strike jamb and the double openings have two rubber bumpers on the head.

Recommandations

To optimize a low conductivity in your steel frame, we recommend the use of a polyisocyanurate insulated door, as manufactured by Métalec

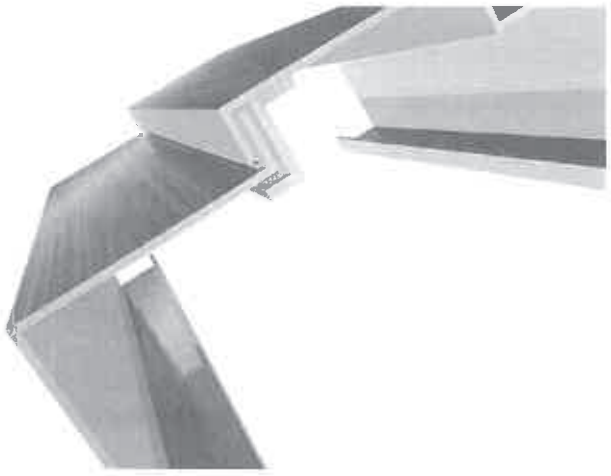

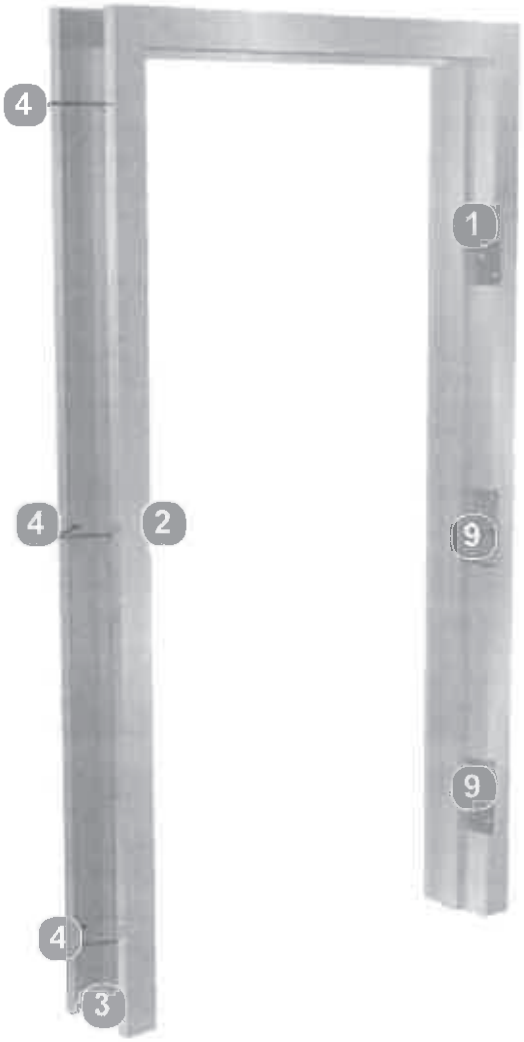

ILLUSTRATION:

1- 10 gauge angular hinge reinforcement
2- ANSI A115.1 strike preparation (ASA)
3- Floor anchor (ATT #3)
4- Masonry wall anchor(ATT #5)
5- Existing wall anchor (ATT #6)
6- Steel stud anchor (ATT #8)
7- Masonry wall anchor (ATT #4)
8- Wood stud anchor (ATT #7)
9- 10 gauge hinge reinforcement

SEVERAL TYPES OF ANCHOR:

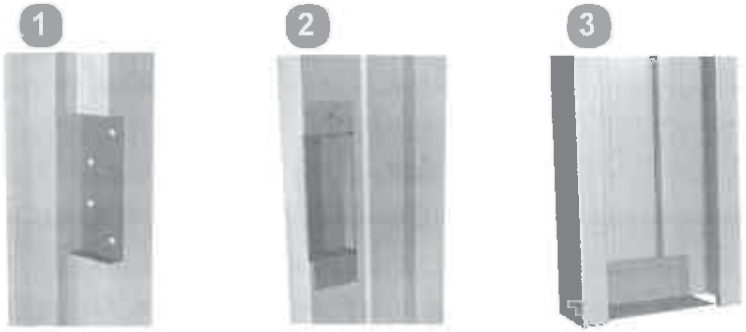

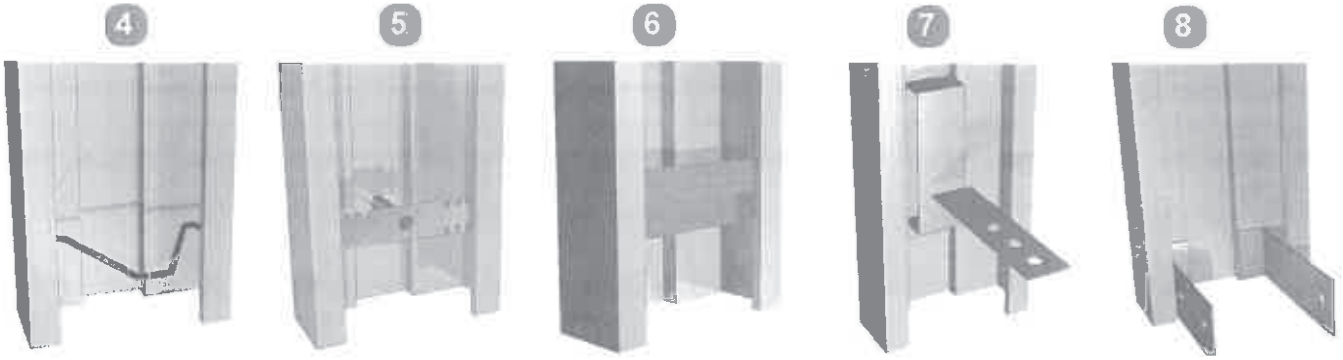

N.B.: Other hardware preparations are also available upon request.

Steel doors

Over the years, Métalec has established a solid reputation in the steel door manufacturing area of expertise for commercial, industrial and institutional purposes.

The Métalec steel doors are offered in several sizes with a variety of designs and cores. They are also available with a 20, 45, 90,or 180 min. fire rating. A label is affixed on the product to certify the fire resistance period.

"PS" SERIES

Technical details

- Métalec steel doors are manufactured using 20, 18, 16 or 14 gauge galvanized steel;
- The door faces are perfectly smooth, without visible joints;
- The door panels are vertically assembled one to each other by a mechanical lock seam with flush welding near the hardware perforations;
- The door edges have a bevel of 3 mm x 51 mm (1/8" x 2");
- 16 gauge steel end channels are welded by electric resistance at the top and the bottom of the door every 152 mm (6") center to center;
- The non-insulated steel doors have a full honeycomb core made of 16 kg/m3 (1.0 lb/cu.ft) density kraft paper with 25 mm (1") cell size, laminated to the door faces by a polyurethane base adhesive;
- The insulated doors have a 54 kg/m3 (3,4 lb/cu.ft) density polyisocyanurate sheet core with a thermal resistance of RSI 2.0 (R-12.9); or a 16 kg/m3 (1,0 lb/cu.ft) density polystyrene sheet core with a thermal resistance of RSI 1.54 (R-8,75), laminated to the door faces by a polyurethane base adhesive;
- The doors are mortised for three standard hinges of 114 mm x 102 mm (4- 1/2" x 4");
- The hinge reinforcements are made with 10 gauge steel, and the top hinge is reinforced to have additional stiffening bend for high frequency strength;
- The doors are prepared for a standard cylindrical lock or reinforced for a surface-mounted panic bar or for a "push/pull" handle;
- Door closer reinforcement made of 16 gauge steel channel are installed at the top of all steel doors. When the door is reversible, a door closer reinforcement is added at the other end of the door. In the insulated steel doors, all the channels used as reinforcements are filled with the same insulating material as the door.

ASTM A-653 / A 653M Standard

1



Vinyl cap
(optional)

Fiber glass

Top end channel,
16 gauge steel,
1.52 mm (0.060")

Door closer reinforcement
16 gauge steel
1.52 mm (0.060")

Honeycomb,polyisocyanurate
or polystyrene core

2



Hinge reinforcement
10 gauge steel
114 mm x 102 mm (4-1/2" x 4")

3



Honeycomb, polyisocyanurate
or polystyrene core

Bottom end channel,
16 gauge steel,
1.52 mm (0.060")

4



Honeycomb, polyisocyanurate
or polystyrene core



5



Glazing kit,
16 gauge steel
1.52 mm (0.060")

Opening reinforcement
for door with
honeycomb core

Honeycomb, polyisocyanurate
or polystyrene core

6

Standard cylindrical lock
preparation
(161) at 70 mm (2-3/4")





Meets ANSI/BHMA A156.1
A8133 – Steel
A5133 – Stainless Steel
A2133 – Brass

5PB1 5 Knuckle, Plain Bearing Full Mortise Hinge

- For standard weight doors
- Low frequency usage
- Packed with wood and metal screws

Not for use with a door closer.

Options

- NRP, Non-Removable Pin
- SH, Security Stud
- HT, Hospital Tip
- RC, Round Corners - 1/4" or 5/8" Radius
- SEC, Security Fastners - Pin-in-Socket

Dimensions

Size (Inches)	Size (mm)	Gauge
3.5 x 3.5	89 x 89	0.123
4 x 4	102 x 102	0.134
4.5 x 4	114 x 102	0.134
4.5 x 4.5	114 x 114	0.134
5 x 4.5	127 x 114	0.134



Meets ANSI/BHMA A156.1
A8112 – Steel
A5112 – Stainless Steel
A2112 – Brass

5BB1 5 Knuckle, Ball Bearing Full Mortise Hinge

- For standard weight doors
- Medium frequency usage
- 2 ball bearing
- Packed with wood and metal screws

Options

- NRP, Non-Removable Pin
- SH, Security Stud
- HT, Hospital Tip
- RC, Round Corners - 1/4" or 5/8" Radius
- SEC, Security Fastners - Pin-in-Socket

Dimensions

Size (Inches)	Size (mm)	Gauge	Size (Inches)	Size (mm)	Gauge
3.5 x 3.5	80 x 102	0.130	5 x 4.5	127 x 114	0.146
4 x 4	102 x 102	0.130	5 x 5	127 x 127	0.146
4.5 x 4	114 x 102	0.134			
4.5 x 4.5	114 x 114	0.134			

Finishes *brass*

Ives Finish	US3	US4	US10	US10B	US10A	US11	US15	US26	US26D
BHMA	605	606	612	613	614	616	619	625	626

Finishes *steel*

Ives Finish	USP	US3	US4	US10	US10B	US10A	US11	US15	US26	US26D
BHMA	600	632	633	639	640	641	643	646	651	652

Finishes *stainless steel*

Ives Finish	US32	US32D
BHMA	629	630

Finish options											
Color	Bright brass	Satin brass	Antique brass	Satin bronze	Oil rubbed bronze	Satin nickel	Bright chrome	Satin chrome	Satin stainless steel	Satin stainless steel	Aged bronze
ANSI/BHMA number	605	606	609	612	613	619	625	626/626AM	629	630/630AM	643
US number	US3	US4	US5	US10	US10B	US15	US26	US26D	US32	US32D	US11

AM = Antimicrobial.
See pricebook for additional trim and finish availability. 33A, 95 & 99 devices not available in 619 & 63[illegible] finishes.

05





06



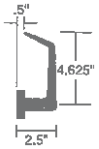

07



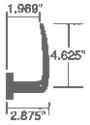

Accent



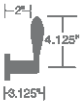

Asti





Latitude



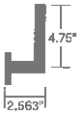

St Annes



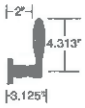

To learn more about suiting of Schlage and Von Duprin products with our decorative or standard levers contact your security consultant or visit **allegion.com/us.**

Escutcheons and roses

Choose from three types of escutcheon and two rose sizes to add tough, durable performance to your lockset.

Escutcheons



L Full face

Specify by adding 'L' after lever design.

Material: Cold-forged brass, bronze or stainless steel

Finishes: 605, 606, 609, 612, 613, 619, 625, 626, 629, 630, 643e

Size: 8" x 1 3/4" x 7/16" (203 mm x 44 mm x 11 mm)





L Concealed

Specify by adding 'C' suffix to function and by adding 'L' after lever design.

Material: Cold-forged brass, bronze or stainless steel

Finishes: 605, 606, 609, 612, 613, 619, 625, 626, 629, 630, 643e

Size: 8" x 1 3/4" x 7/16" (203 mm x 44 mm x 11 mm)





N Escutcheon

Specify by adding 'N' after lever design.

Material: Heavy wrought reinforced brass, bronze or stainless steel

Finishes: 605, 606, 609, 612, 613, 619, 625, 626, 629, 630, 643e

Size: 8" x 2 9/16" x 7/16" (203 mm x 65 mm x 11 mm)



Roses



A Wrought rose

2 1/8" (54 mm) diameter
Available for use on L Series knob and lever designs. Specify by adding 'A' after lever design

Finishes: 605, 606, 609, 612, 613, 619, 625, 626, 629, 630, 643e





B Wrought rose

2 9/16" (65 mm) diameter
Available for use on L Series knob and lever designs. Specify by adding 'B' after lever design.

Finishes: 605, 606, 609, 612, 613, 619, 625, 626, 629, 630, 643e



C Wrought rose

2 5/8" (66 mm) diameter
Available for use on L Series knob and lever designs. Specify by adding 'C' after lever design.

Finishes: 605, 606, 609, 619, 625, 626, 629, 630, 643e

Lock functions

Lock components

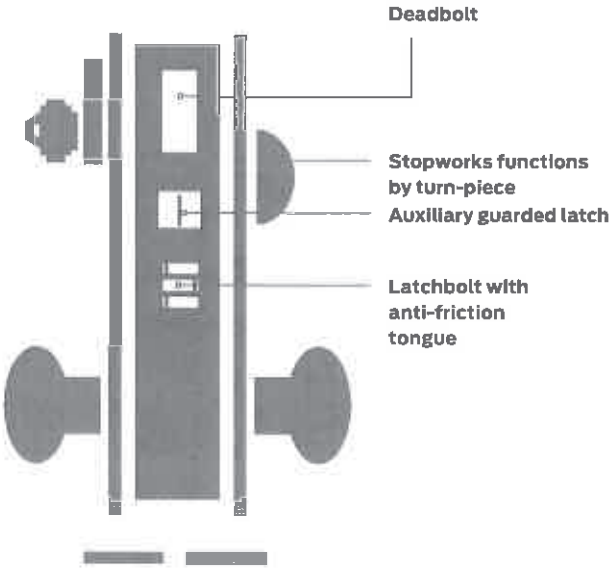

Symbol key

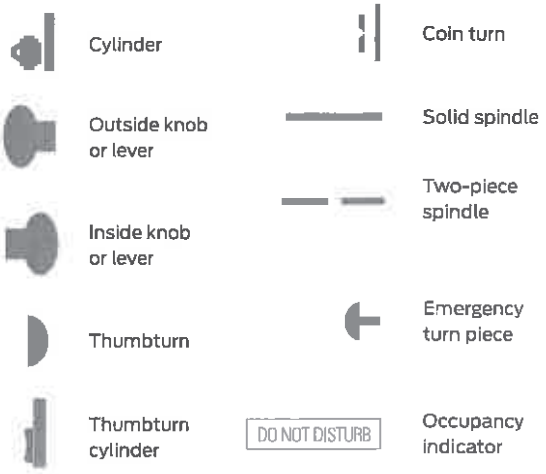

Product identification guide

L/LV 9 4 53 P

Lock series
L = standard
LV = vandlgard

0 = dummy trim without lock case
9 = functions with lock case

0 = no deadbolt
1 = dummy trim
4 = with deadbolt

Function

Cylinder suffix

P = 6-pin full-face mortise cylinder with Schlage logo*
L = less full-face cylinder
C = concealed mortise cylinder
W = less concealed cylinder
R = full-size interchangeable core with Schlage logo
J = less full-size interchangeable core
F = full-size interchangeable core less Schlage logo
T = full-size construction core
BD = SFIC less core
BDC = disposable SFIC
GD = Everest patented SFIC
HD = construction SFIC

SFIC = Small Format (Best® style) Interchangeable Core

To order less Schlage logo, specify lock "with K510-612 faceplate."

LV = Vandlgard® function allows exterior lever to rotate freely down while remaining securely locked.

Lock functions

Single cylinder non-deadbolt functions



Schlage **L9050** / **LV9050** — ANSI **F04**

Office and inner entry lock

Latchbolt retracted by knob/lever from either side unless outside is made inoperative by key outside or by turning inside thumbturn. When outside is locked, latchbolt is retracted by key outside or by knob/lever inside. Outside knob/lever remains locked until thumbturn is returned to vertical or unlocked by key. Auxiliary latch deadlocks latchbolt when door is closed. Inside liner is always free for immediate egress.



L9056
LV9056

L9050 with automatic unlocking

Latchbolt retracted by knob/lever from either side unless outside is made inoperative by key outside or by rotating inside thumbturn. Outside knob/lever unlocked by key outside, thumbturn or closing door. Rotating inside knob/lever simultaneously retracts latchbolt and unlocks outside knob/lever. Auxiliary latch deadlocks latchbolt when door is closed. Inside lever is always free for immediate egress.



L9070 **F05**
LV9070

Classroom lock

Latchbolt retracted by knob/lever from either side unless outside is locked by key. Unlocked from outside by key. Inside knob/lever always free for immediate exit. Auxiliary latch deadlocks latchbolt when door is closed. Inside lever is always free for immediate egress.



L9076 **F06**
LV9076

Classroom holdback lock

Latchbolt retracted by knob/lever from either side unless outside is locked by key. When locked, latchbolt retracted by key outside or knob/lever inside. Auxiliary latch deadlocks latchbolt when door is closed. Depress inside knob/lever and turn key 360° for holdback feature. Inside lever is always free for immediate egress.



L9080 **F07**
LV9080

Storeroom lock

Latchbolt retracted by key outside or by knob/lever inside. Outside knob/lever is always inoperative. Auxiliary latch deadlocks latchbolt when door is closed. Inside lever is always free for immediate egress.



Schlage **L9080EL** / **LV9080EL** — ANSI

Electrically locked (fail safe)

Outside knob/lever continuously locked by 24V AC or DC. Latchbolt retracted by key outside or by knob/lever inside. Switch or power failure allows outside knob/lever to retract latchbolt. Auxiliary latch deadlocks latchbolt when door is closed. Inside knob/lever always free for immediate exit. Inside lever is always free for immediate egress.



L9080EU
LV9080EU

Electrically unlocked (fail secure)

Outside knob/lever unlocked by 24V AC or DC. Latchbolt retracted by key outside or knob/lever inside. Auxiliary latch deadlocks latchbolt when door is closed. Inside lever is always free for immediate egress.



L9080EL-RX / LV9080EL-RX
L9080EU-RX / LV9080EU-RX

Request to exit (RX) electrified lock

Same as L9080EL and L9080EU functions. In addition, a micro-switch positioned inside the lock case monitors the retractor crank, and is actuated when rotation of the inside or outside knob/levers rotates the retractor hub. The switch signals the use of that opening to security systems, allowing a non-disruptive means of immediate egress. Specify per L283-263 with L functions, specify L283-239 with LV functions. Inside lever is always free for immediate egress.

Decorative Levers



M51
Knurling available



M52
Knurling available



M53



M54



M55



M56



M57 ••



M61
(Handed)



M62 ••
(Handed)



M63
(Handed)



M81
Knurling available



M82



M83



M84



M85
(Handed)

•• Available in Stainless Steel substrate ONLY.

Standard Levers



01



02
Knurling available



03*
Knurling available



05



06*
Default lever
Knurling available



07



12
(Handed)



16
(Omega)



17*
Knurling available



18



ACC
(Accent)
(Handed)



AST
(Asti)
(Handed)



MER
(Merano)
(Handed)



STA
(St. Annes)
(Handed)



LAT*
Latitude



LON*
Longitude

*Available in Stainless Steel – specify SS when ordering





The 299 Strike ships standard, optional strikes **available**

98 and 99 rim exit devices for all types of single and double doors with mullion, UL listed for Panic Exit Hardware. Devices are ANSI A156.3 – 2001 Grade 1. The 98 device has a smooth mechanism case and the 99 device has a grooved case. The rim device is non-handed except when the following device options are used: SD (Special Dogging), -2 (Double Cylinder) or SS (Signal Switch). See Opposite page for available outside trim and device functions. Covers stock hollow metal doors with 86 or 161 cutouts on single doors (may cover cutouts on pairs – consult template).

Finishes – US3, US3A, US4, US4A, US10, US26, US26D, US26D-AM Antimicrobial, US28, 313, 315 & 643E. US15 and US32D available with 98 Series only.

Hex key dogging comes standard on 98/99 Rim Exit Devices



Specifications

Device Functions	Device ships EO/DT/NL. Field selectable. For TP, K or L remove NL drive screw from device.
Device Lengths	3' 2'4" to 3' (711mm to 914 mm) Door Size 4' 2'10" to 4' (864 mm to 1219 mm) Door Size
Device Centerline from Finished Floor	39 13/16" (1011 mm) 39 1/16" (1008 mm) with Mullion
Center Case Dimensions	8" x 2¾" x 2⅜" (203mm x 70mm x 60mm)
Mechanism Case Dimensions	2¼" x 2¼" (57mm x 57mm)
Projection	Pushbar Neutral – 3 13/16" (97 mm) Pushbar Depressed – 3 1/16" (78 mm)
Latch Bolt	Deadlocking, ¾" (19mm) throw
Fasteners & Sex Bolts (SNB)	Includes screw pack for 1¾" (44mm) and 2¼" (57mm) thick metal or wood doors. Optional 425 SNB available, see page 9 for quantities.
Electric Options	**LX** Latchbolt Monitor Switch **RX** Pushpad Monitor Switch **RX2** Double Pushpad Monitor Switch **E** Electric Locking & Unlocking Trim **EL** Electric Latch Retraction **QEL** Quiet Electric Latch Retraction **SS** Signal Switch **CX** Chexit Delayed Exit **ALK** Alarm Exit Kit **WP-RX** Waterproof Request to Exit
Mechanical Options	**-2** Double Cylinder **GBK** Glass Bead Kit **PN** Pneumatic Latch Retraction **XP** Extra Protection **SNB** Sex Bolts **SEC** Security Screws
Dogging Feature	Hex key dogging standard
Dogging Options	**CD** Cylinder Dogging **SD** Special Center Case Dogging **LD** Less Dogging **DI** Dogging Indicator **CI** Cylinder Dogging Indicator
Strikes	299 – Dull Black

XP
Extra Protection
- 90° latch-to-strike contact
- Force resistance of 2,000+ lbs.

E (E996L)
Electrified Breakaway Lever
- Electrified remote locking/unlocking
- Standard in fail safe condition

QEL
Quiet Electric Latch Retraction
- Bolt retraction via switch
- Converts exit door to push-pull operation

CD
Cylinder Dogging
- Replaces hex key dogging
- Requires standard 1¼" mortise cylinder

CX
Chexit Delayed Exit
- Meets NFPA 101 requirements
- Self-contained controls, locking, alarm

RX
Pushpad Monitor Switch
- Signals use of an opening
- SPDT switch to monitor pushpad

ELR
Electric Latch Retraction
- Enables remote unlatching
- Alternative to manual dogging

ALK
Alarm Exit Kit
- Unauthorized opening triggers 85-decibel horn
- Set in armed or disarmed mode by key

PN
Pneumatic Latch Retraction
- For areas where electrical devices banned
- Special linkage for mechanical or pneumatic dogging

BRA EMB KN SC
Braille, Embossed and Knurled Touchpads
- Braille touchpad embossed with "Caution Stairwell"
- Other messages available by special order

VON DUPRIN

Knob, Exit Only and Thumbpiece Trim – 990 & 996K

	K	K-NL	K-BE	K-DT	EO	TP	TP-BE	EO
	 **Knob** Key Locks & Unlocks	 **Knob – Night Latch** Key Retracts Latchbolt	 **Knob – Blank Escutcheon** Always Operable (No Cylinder)	 **Knob – Dummy Trim** Pull When Dogged	 **Exit Only Plate**	 **Thumbpiece** Key Locks & Unlocks	 **Thumbpiece Blank Escutcheon** Always Operable (No Cylinder)	**Exit Only Plate**
Trim Description	996K	996K-NL	996K-BE	996K-DT	996EO	990TP	990TP-BE	990EO
Escutcheon Plate Size	2¾" x 10¾" x 27/32" *(70x273x21mm)*	2¾" x 10¾" x 27/32" *(70x273x21mm)*	2¾" x 10¾" x 27/32" *(70x273x21mm)*	2¾" x 10¾" x 27/32" *(70x273x21mm)*	*(76x360x2mm)*	3" x 14 3/16" x 3/32" *(76x360x2mm)*	3" x 14 3/16" x 3/32" *(76x360x2mm)*	3" x 14 3/16" x 3/32" *(76x360x2mm)*
Pull Center to Center	—	—	—	—	—	5½" *(140mm)*	5½" *(140mm)*	5½" *(140mm)*
Projection	3¼" *(83mm)*	3¼" *(83mm)*	3¼" *(83mm)*	3¼" *(83mm)*	—	2" *(51mm)*	2" *(51mm)*	2" *(51mm)*
ANSI Function	08	09	14	02	01	05	14	14
Cylinder Type								
Rim or Vertical Rod Device	Rim	Rim	—	—	—	Rim	—	—
Mortise Lock Device	1¼" Mortise	1¼" Mortise			—	1¼" Mortise	—	—
Handing	—	—	—	—	—	—	—	—
#425 SNB optional-HMD Req. WD w/o SLM Pkg.	2	2	2	2	2	2	2	2
#825 SNB Req. WD w/o SLM Pkg F Rim device ONLY	2	2	2	2	2	2	2	2
#425 SNB Req. w/499F	2	2	2	2	2	2	2	2

98-F/99-F Rim Fire Exit Device

VON DUPRIN





The 299F Strike ships standard, optional strikes available



499F Strike with 9854/9954 Mullion

98-F and 99-F rim fire exit devices for all types of single doors up to 4˝ x 10˝ (1219mm x 3048mm) or 8˝ x 10˝ (2438mm x 3048mm) double doors with 9954 or 9854 mullion, UL listed for Fire Exit Hardware. See page 61 for detailed information on UL listed fire exit hardware label and door opening size information. Devices are ANSI A156.3 – 2001 Grade 1. The 98-F device has a smooth mechanism case and the 99-F device has a grooved case. The rim device is non-handed except when the following device options are used: -2 (Double Cylinder) or SS (Signal Switch). See Opposite page for available outside trim and device functions.

Finishes – US3, US3A, US4, US4A, US10, US26, US26D, US26D-AM Antimicrobial, US28, 313, 315 & 643E. US15 and US32D available with 98 Series only.

Specifications

Device Functions	Device ships EO/DT/NL. Field selectable. For TP, K or L remove NL drive screw from device.
Device Lengths	3' 2'4" to 3' (711mm to 914 mm) Door Size 4' 2'10" to 4' (864 mm to 1219 mm) Door Size
Device Centerline from Finished Floor	39 13/16" (1011 mm) 39 11/16" (1008 mm) with Mullion
Center Case Dimensions	8" x 2¾" x 2 ⅜" (203mm x 70mm x 60mm)
Mechanism Case Dimensions	2¼" x 2¼" (57mm x 57mm)
Projection	Pushbar Neutral – 3 13/16" (97 mm) Pushbar Depressed – 3 1/16" (78 mm)
Latch Bolt	Deadlocking, ¾" (19mm) throw
Fasteners & Sex Bolts (SNB)	Includes screw pack for 1¾" (44mm) and 2¼" (57mm) thick metal or wood doors. Optional 425 SNB available for metal doors. 425 & 825 SNB *required* on wood doors without SLM blocking. See page 11 for quantities.
Electric Options	**LX** Latchbolt Monitor Switch **RX** Pushpad Monitor Switch **RX2** Double Pushpad Monitor Switch **E** Electric Locking and Unlocking Trim **EL** Electric Latch Retraction **QEL** Quiet Electric Latch Retraction **SS** Signal Switch **CX** Chexit Delayed Exit **ALK** Alarm Exit Kit **WP-RX** Waterproof Request to Exit
Mechanical Options	**-2** Double Cylinder **GBK** Glass Bead Kit **PN** Pneumatic Latch Retraction **XP** Extra Protection **SNB** Sex Bolts **SEC** Security Screws **SLM** Special Laminate Material Blocking
Dogging Option	No Mechanical Dogging. EL and QEL option available
Strikes	299F – Dull Black, 499F with Mullions

XP
Extra Protection
- 90° latch-to-strike contact
- Force resistance of 2,000+ lbs

E (E996L)
Electrified Breakaway Lever
- Electrified remote locking/unlocking
- Standard ir. fail safe condition

EL
Electric Latch Retraction
- Enables remote unlatching
- Alternative to manual dogging

RX
Pushpad Monitor Switch
- Signals use of an opening
- SPDT switch to monitor pushpad

QEL
Quiet Electric Latch Retraction
- Bolt retraction via switch
- Converts exit door to push-pull operation

ALK
Alarm Exit Kit
- Unauthorized opening triggers 85-decibel horn
- Set in armed or disarmed mode by key

CX
Chexit Delayed Exit
- Meets NFPA 101 requirements
- Self-contained controls locking, alarm

SG
Safety Glow
- Shows exit door location in darkness or smoke
- Developed to meet MEA standards

PN
Pneumatic Latch Retraction
- For areas where electrical devices banned
- Special linkage for mechanical or pneumatic dogging

BRA, EMB, KN, SC
Braille, Embossed and Knurled Touchpads
- Braille touchpad embossed with "Caution Stairwell"
- Other messages available by special order

Standard Trim

	EO Exit only	DT  **Dummy Trim** Pull When Dogged (Not recommended for fire device)	NL  **Night Latch** Key Retracts Latchbolt	NL-OP  **Night Latch** Key Retracts Latchbolt Optional Pull Required
Product Description	98EO-F 99EO-F	— —	98NL-F 99NL-F	98NL-OP-F 99NL-OP-F
Trim Description	—	990DT	990NL-R/V	110NL-MD 110NL-WD
Escutcheon Plate Size	—	3" x 14 3/16" x 3/32" *(76x360x2mm)*	3" x 14 3/16" x 3/32" *(76x360x2mm)*	—
Pull Center to Center	—	5½" *(140mm)*	5½" *(140mm)*	—
Projection	—	2" *(51mm)*	2" *(51mm)*	—
ANSI Function	01	02	03	03
Cylinder Type	—	—	Rim	Rim
Handing	—	—	—	—
Optional Trim	x990EO x996EO	x996K-DT x996L-DT x696DT x697DT	x996K-NL x996L-NL x696NL x697NL	
#425 SNB optional - HMD req WD w/o SLM pkg	6	2	2	6
#825 SNB req. WD w/o SLM pkg.	2 (if using trim)	2	2	2
#425 SNB req. w/ 499F	2	2	2	2

	L  **Lever** Key Locks & Unlocks	L-NL  **Lever – Night Latch** Key Retracts Latchbolt	L-BE  **Lever – Blank Escutcheon** Always operable (No Cylinder)	L-DT  **Lever Dummy Trim** Pull When Dogged (Not recommended for fire device)
Product Description	98L-F 99L-F	98L-NL-F 99L-NL-F	98L-BE-F 99L-BE-F	— —
Trim Description	996L-R/V*	996L-NL-R/V	996L-BE-R/V*	996L-DT-R/V
Escutcheon Plate Size	2¾" X 10¾" X 27/32" *(70x273x21mm)*	2¾" X 10¾" X 27/32" *(70x273x21mm)*	2¾" X 10¾" X 27/32" *(70x273x21mm)*	2¾" X 10¾" X 27/32" *(70x273x21mm)*
Pull Center to Center	—	—	—	—
Projection	2⅞" *(73mm)*	2⅞" *(73mm)*	2⅞" *(73mm)*	2⅞" *(73mm)*
ANSI Function	08	09	14	02
Cylinder Type	Rim	Rim	—	—
Handing	Handed/Reversible	Handed/Reversible	Handed/Reversible	Handed/Reversible
#425 SNB optional - HMD req WD w/o SLM pkg	2	2	2	2
#825 SNB req. WD w/o SLM pkg	2 (if using trim)	2	2	2
#425 SNB req w/ 499F	2	2	2	2

* Electrified lever operation available

Notes

4050 Series

Features

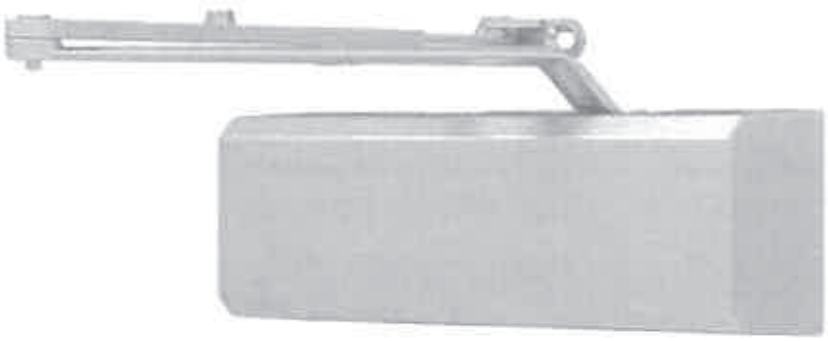

The 4050 Series cast aluminum closer is engineered for durability and built tough to excel in the harsh environments of high frequency, high abusive traffic areas. Ideal for commercial building applications and competitive specification situations that demand a combination of quality, reliability and value. The cast aluminum door closer offers premium features like powder coating, full complement bearing, All Weather Fluid and a 25 year warranty.

Certifications	Grade 1 - ANSI A156.4, UL10C, ADA, 100 Hour Salt Spray, Meets BAA - Buy American Act
Body Construction	■ Cast Aluminum Body ■ Full Complement Bearings ■ 1-1/2″ Diameter Piston ■ 11/16″ Diameter Double Heat Treated Pinion Journal
Fluid	All Weather Liquid X Fluid
Handing	Non-Handed
Templating	Peel-n-Stick templates - 2-3/8″ x 6-3/4″ Mounting Hole Pattern
Size	Adjustable spring size 1-6
Warranty	25 years

Cover	■ Plastic, Standard ■ Metal, Optional
Fasteners	Self Reaming and Tapping Screws (SRT)
Mounting	Hinge (Pull Side), Top Jamb (Push Side), Parallel Arm (Push Side)
Arms	Standard Regular Arm
Finishes/Colors/ Powder Coat	■ Aluminum (689) ■ Statuary Bronze (690) ■ Light Bronze (691) ■ Black (693) ■ Dark Bronze (695) ■ Brass (696) ■ Custom colors optional ■ Optional SRI primer - powder coat only

Special Templates | Customized installation templates or products may be available to solve unusual applications. Contact LCN Product Support for assistance.

MOUNTING					FINISH		COVER		CYLINDER					*ARM FUNCTION								
HINGE (PULL) SIDE	TOP JAMB (PULL)	TOP JAMB (PUSH)	PARALLEL ARM	STOP FACE	POWDER COAT	PLATED	PLASTIC	METAL	NON-HANDED	NON-SIZED	ACCESSIBILITY	DELAYED ACTION	AVB	REGULAR (DOUBLE)	STANDARD (SINGLE)	HOLD-OPEN	FUSIBLE LINK	EDA/HEDA	CUSH/HCUSH	SCUSH/SHCUSH	DOUBLE EGRESS
●	○	●	●	○	◐	○	●	●	◐	●	♿	●	○	180°	○	180°	○	180°	110°	110°	○

♿ *Closer available with less than 5.0 lbs. opening force on 36″ door.*

* *Maximum opening/hold-open point with standard template.*

● AVAILABLE
○ NOT AVAILABLE

EDA mount

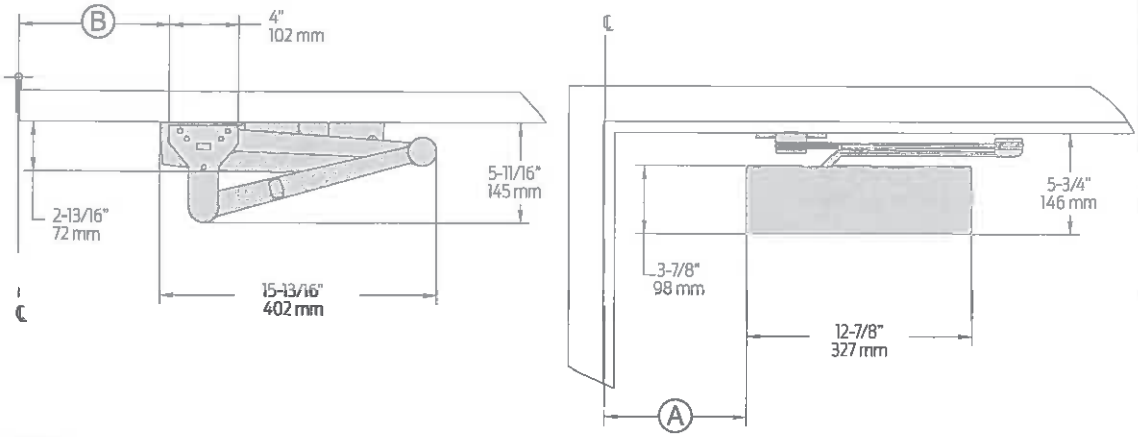

CUSH mount

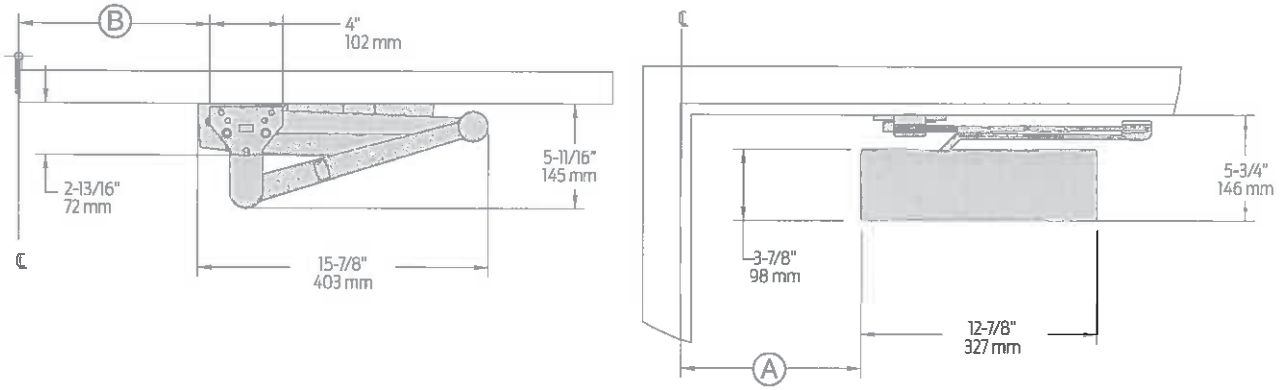

The 'A' dimension refers to the edge of the closer body to the center line of pivot or hinge.
The 'B' dimension refers to the edge of the closer shoe bracket to the center line of pivot or hinge.

Clearance	4050-62EDA is 5-11/16″ (145mm) from door face. 5-11/16″ (145mm) for CUSH	
Head Frame	Flush or rabetted requires FLUSH PANEL ADAPTER, 4050-419	
CUSH ARM	Requires CUSH SHOE SUPPORT, 4050-30 for fifth screw anchorage where reveal is less than 3-1/16″ (78 mm)	
Delayed Action	Delays closing from 180° to approximately 70°. Delay time adjustable up to approximately 1 minute.	
Maximum Opening	EDA arm can be templated for points at: 100°	CUSH arms can be templated for opening/hold-open point at:
	100°: A = 8-1/16″ (205 mm) B = 8-5/8″ (219 mm)	85°: A = 9-13/16″ (250 mm) B = 10-1/2″ (267 mm)
	100° to 130°: A = 6-9/16″ (167 mm) B = 7-1/8″ (181 mm)	90°: A = 8-15/16″ (227 mm) B = 9-5/8″ (244 mm)
	130° to 150°: A = 5-9/16″ (141 mm) B = 6-1/8″ (156 mm)	95°: A = 8-5/16″ (212 mm) B = 9″ (229 mm)
	150° to 180°: A = 4-9/16″ (116 mm) B = 5-1/8″ (130 mm)	100°: A = 7-11/16″ (196 mm) B = 8-3/8″ (213 mm)
	Hold-open points up to maximum opening with HEDA arm	105°: A = 7-1/16″ (180 mm) B = 7-3/4″ (197 mm)
		110°: A = 6-9/16″ (167 mm) B = 7-1/4″ (184 mm)

Notes:

- *Spring Cush dead stop points are approximately 5° more than templated stop point*
- *Hold open at templated stop points*
- *4050 Series closers ordered with EDA or CUSH arms include 4050-201 FIFTH HOLE SPACER to support the shoe*

4050 Series

Mounting details

Hinge (Pull Side) Mounting

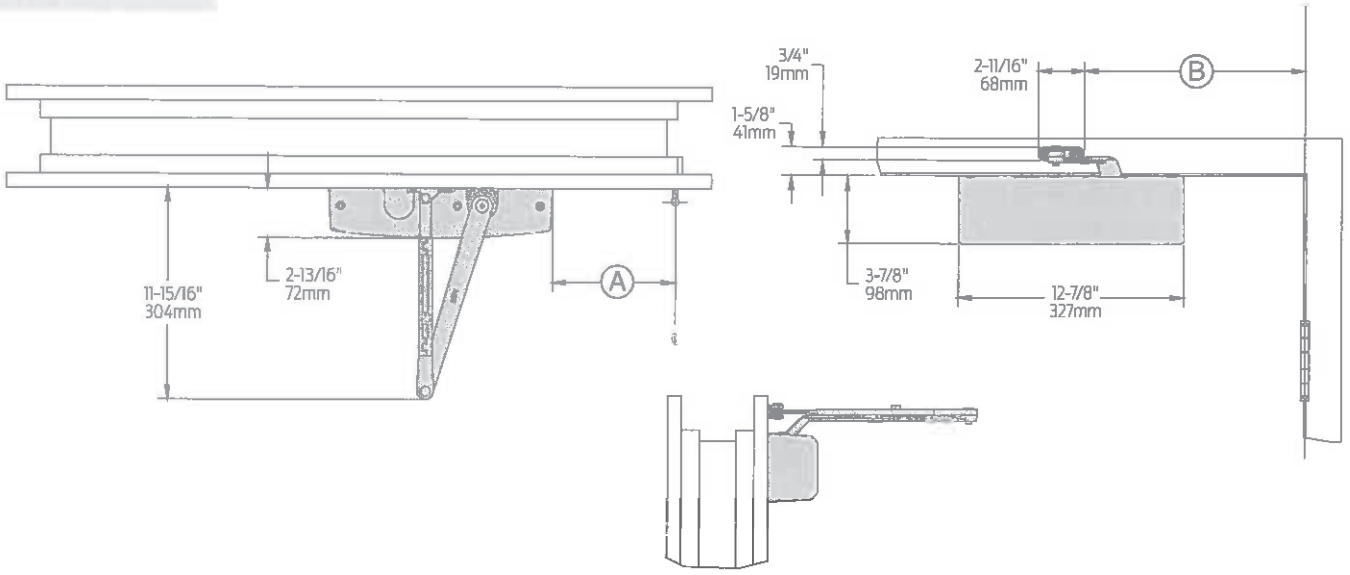

Butt Hinges	Should not exceed 5″ (127 mm) in width
Auxiliary Stop	Recommended at hold-open point or where a door cannot swing beyond templated maximum opening
Reveal	Should not exceed 3/4″ (19 mm) for regular arm or hold-open arm
Top Rail	■ Less than 3-7/8″ (98 mm) requires PLATE, 4050-18. ■ Plate requires 1-13/16″ (44 mm) minimum
Clearance	2-13/16″ (72 mm) behind door required for 90° installation
Delayed Action	Delays closing from 180°-70°. Delay time adjustable up to approximately 1 minute
Maximum Opening	■ Templating allows up to 180° ■ Hold-open points up to maximum opening with hold-open arm
	To 100°: A = 6-15/16″ (176mm) B = 12-5/8″ (321 mm)
	100° to 120°: A = 5-15/16″ (151mm) B = 11-5/8″ (295 mm)
	120° to 150°: A = 3-15/16″ (100 mm) B = 9-5/8″ 244 mm)
	150° to 180°: A = 3-7/16″ (87mm) B = 9-1/8″ (232 mm)

Top Jamb (Push Side) Mounting

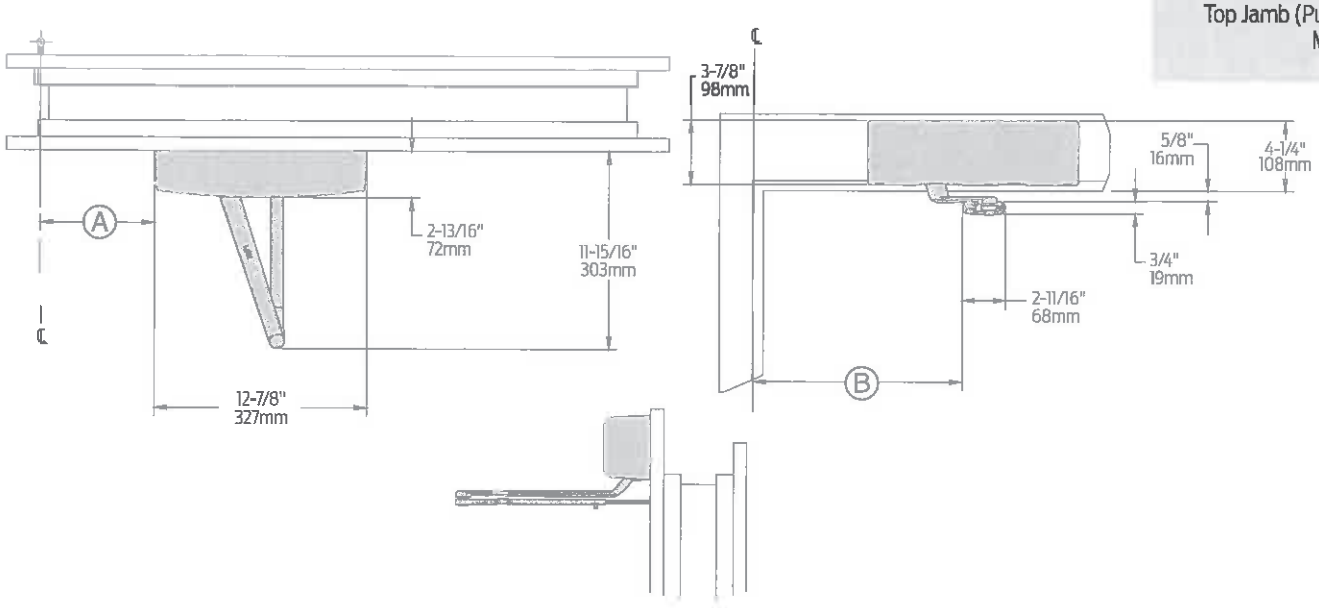

The 'A' dimension refers to the edge of the closer body to the center line of pivot or hinge.
The 'B' dimension refers to the edge of the closer shoe bracket to the center line of pivot or hinge.

Butt Hinges	Should not exceed 5″ (127 mm) in width		
Auxiliary Stop	Recommended at hold-open point or where a door cannot swing beyond templated maximum opening		
Reveal	Arm Type	Reveal	Max Opening
	Regular Arm	4″	Up to 180°
	Long	9″	Up to 150°
	Hold-Open	4″	Up to 170°
	Long Hold-Open Arm	8-3/4″	Up to 155°
Top Rail	Requires 2″ (51 mm) minimum.		
Head Frame	Less than 3-7/8″ (98 mm) requires plate.		
Delayed Action	Delay closing from 180° to 70°. Delay time adjustable up to approximately 1 minute.		
Maximum Opening	■ Templating allows up to 180° ■ Hold-open points up to maximum opening with hold-open arm		
	To 100°:	A = 6-7/8″ (175 mm) B = 12-11/16″ (322 mm)	
	100° to 120°:	A = 5-7/8″ (149 mm) B = 11-11/16″ (297 mm)	
	120° to 150°:	A = 3-7/8″ (98 mm) B = 9-11/16″ (246 mm)	
	150° to 180°:	A = 3-3/8″ (86 mm) B = 9-3/16″ (233 mm)	

4050 Series

Mounting details

Parallel Arm (Push) Side Mounting

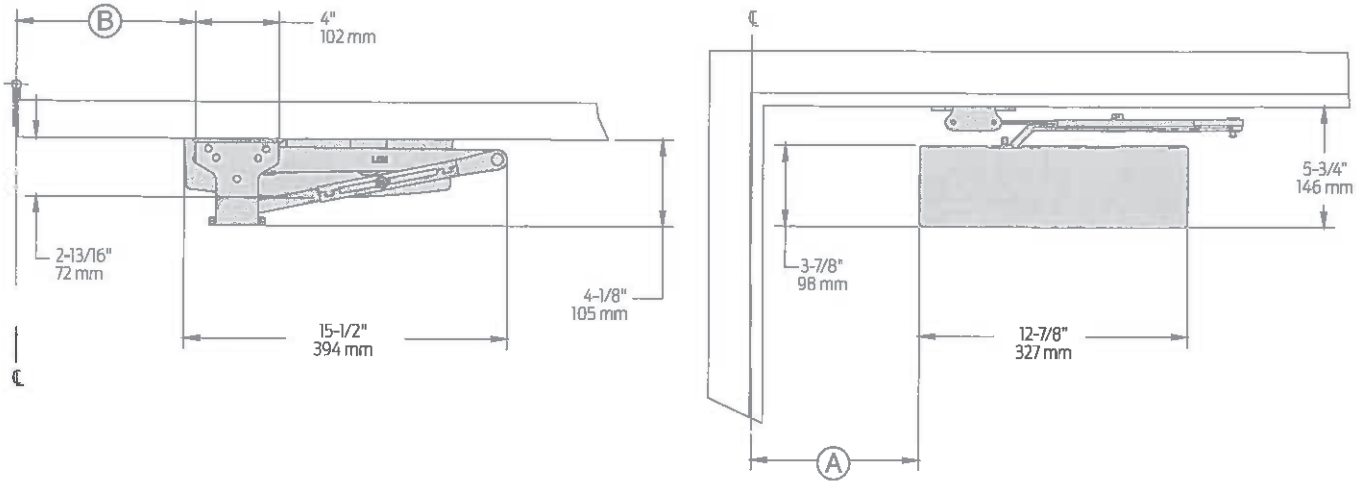

The 'A' dimension refers to the edge of the closer body to the center line of pivot or hinge.
The 'B' dimension refers to the edge of the closer shoe bracket to the center line of pivot or hinge.

Butt Hinges	Should not exceed 5″ (127 mm) in width	
Auxiliary Stop	Recommended at hold-open point, where the door cannot swing beyond templated maximum opening, or where CUSH-N-STOP arm is not used	
Top Rail	Less than 5-3/4″ (146mm) measured from the stop requires PLATE, 4050-18PA. Plate requires 2-1/4″ (57 mm) minimum from the stop	
Clearance	For 4050-62PA shoe is 4-1/8″ (105 mm) from door face	
Head Frame	Flush or rabetted requires PA SHOE ADAPTER, 4050-419	
Stop Width	Minimum 1-3/16″ (30 mm)	
Blade Stop	Clearance requires 1/2″ (13mm) BLADE STOP SPACER, 4050-61	
Delayed Action	Delays closing from 180°-70°. Delay time adjustable up to approximately 1 minute	
Auxiliary Shoe	4050-62A allows installation of regular arm with overhead holder/stop	
Maximum Opening	To 100°:	A = 8-1/16″ (205 mm) B = 8-5/8″ (219 mm)
	100° to 130°:	A = 6-9/16″ (167 mm) B = 7-1/8″ (181 mm)
	130° to 150°:	A = 5-9/16″ (141 mm) B = 6-1/8″ (156 mm)
	150° to 180°:	A = 4-9/16″ (116 mm) B = 5-1/8″ (130 mm)
	Hold-open points up to maximum opening with hold-open arm	

Note:
· Optional mounting requires PA SHOE, 4050-62PA for regular or HOLD-OPEN arms

100 Series concealed overhead door holders/stops

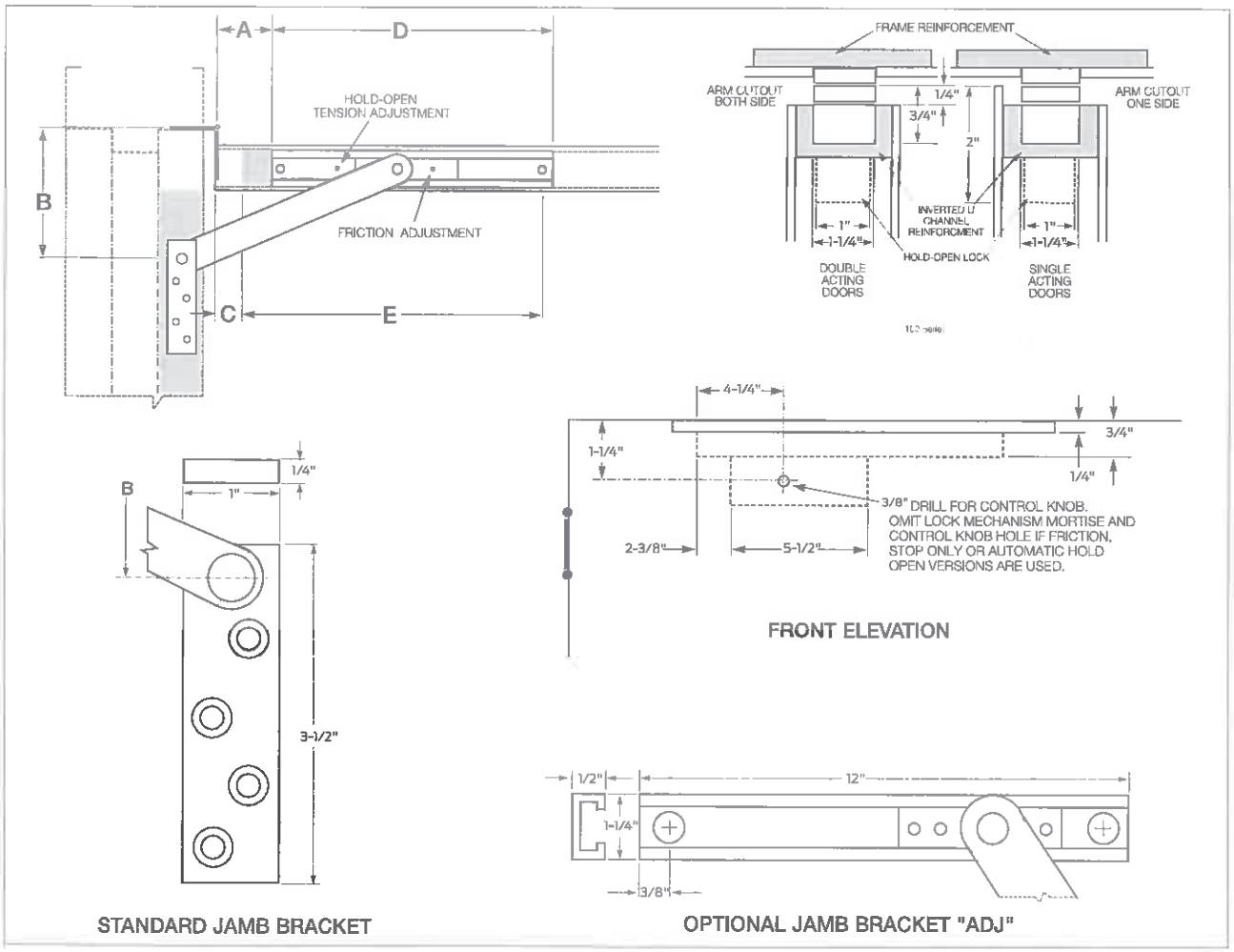

100 Series sizing chart

	Butts/offset pivots				Center hung			
Size	Door opening	Stop only	Hold open	Friction	Door opening	Stop only	Hold open	Friction
1	18" - 23"	101S*	101H*	101F*	-	-	-	-
2	23 1/16" - 27"	102S*	102H*	102F*	-	-	-	-
3	27 1/16" - 33"	103S	103H	103F	33 1/16" - 39"	103S	103H	103F
4	33 1/16" - 39"	104S	104H	104F	39 1/16" - 45"	104S	104H	104F
5	39 1/16" - 45"	105S	105H	105F	45 1/16" - 51"	105S	105H	105F
6	45 1/16" - 51"	106S	106H	106F	51 1/16" - 59"	106S	106H	106F

Note: This chart illustrates the most common types of hinging and door opening sizes. For unusual door details, contact Glynn-Johnson for availability.

* These sizes are not available for use with offset pivots. Also not available with the ADJ option.

* Wood doors with automatic flush bolts or roller latches, consult factory.

BHMA/ANSI, A156.8 & Fed. spec. cross reference

G-J model	BHMA*	Fed. spec.
101-106 H	C01511	1160
101-106 S	C01541	-
101-106 F	C01531	-

* First numeral (0) designates optional material.

To specify:
Brass material, change 0 to 1 (i.e. C11511)
Stainless steel material, change 0 to 5 (i.e. C51511)

BHMA:
All 100 Series models are designed for heavy-duty applications and far exceed BHMA cycle test and force test requirements for Grade 1 holders and stops.

The template information on this page is for reference only and is not intended to serve as an installation template. For complete dimensional information, refer to Glynn-Johnson template book.



How to order

10 — 4 — H — US26D — ADJ

Overhead Series:

10	

Size (door opening using butts or offset pivots):

1	(18" - 23")
2	(23 1/16"–27")
3	(27 1/16" –33")
4	(33 1/16"–39")
5	(39 1/16"–45")
6	(45 1/16"–54")

Function:

H	Hold-open
HP	Internal hold-open
F	Friction hold-open
S	Stop-only
SE	Special stop-only

Finishes:

US3	Polished brass
US4	Satin brass
US10	Satin bronze
US10B	Oil rubbed bronze
US32	Polished stainless
US32D	Satin stainless steel
SP4	Powder coat brass
SP10	Powder coat bronze
SP28	Powder coat aluminum
SP313	Powder coat dark bronze
SPBLK	Powder coat black

Options:

ADJ	Adjustable jamb bracket
CJLH	Special jamb bracket for LCN 5030 closer, LH door
CJRH	Special jamb bracket for LCN 5030 closer, RH door
SOC	Pin-in-socket security screws



8200 Push Plate
8300 Pull Plate, Prep for Pull (less pull)

Available Sizes
3" x 12"
3.5" x 15"
4" x 16"
6" x 16"
8" x 16"
Special sizes are available. Consult factory.

Plates Cut for Cylinder or Thumbturns

Plates are available with cutout for cylinder or thumbturn; standard cutout is 2" from top and centered on plates up to 4" wide. For plates wider than 4" cutout is located 2" from outer edge, specify LH or RH. When pull location interferes with standard cutout location a detail drawing should be furnished with the order.

Standard cutout is 1-1/4" for cylinder and 3/8" for thumbturn.

Specify CFC for cutout for cylinder or CFT for cutout for thumbturn.

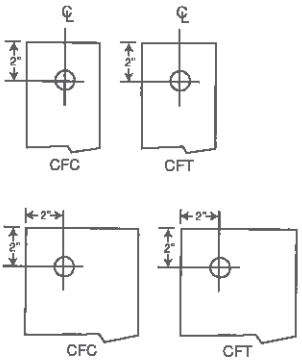

Finishes *brass*

US Number	US3	US4	US10	US10B	US15	US26	US26D*
BHMA	605	606	612	613	619	625	626

Finishes *stainless steel*

US Number	US32D*
BHMA	630

Finishes *aluminum*

US Number	US28
BHMA	628

** Available with Antimicrobial Coating, use suffix AM*

8400 Series Protection Plates

- Door protection plates are available in .050" thick brass, stainless steel or aluminum; and 1/8" thick high impact polyethylene in clear or black.
- Bevel edge options; specify B4E for all four edges.
- Mounting screw pack furnished standard, 16 screws per pack. Optional screw packs are available for TEK or TORK screw heads. Refer to the following chart for ordering.
- Specify NMH for no mounting holes. (Not available on 8402)
- Specify NMH-A for no mounting holes with adhesive. (Not available on 8402)
- Specify CS for counter sunk mounting holes.
- Specify ERS prepped with extra row of screws.

Kickplate Gasket Tape Tape is recommended when using a brass plate on a metal door to reduce tarnishing from electrolytic oxidation. One tape pack will cover an the perimeters of a 8" x 34" kickplate. Order 8401 Gasket Tape.



8400 Protection Plate
8402 (UL)* Protection Plate

**UL mark appears in upper right corner. Factory supplied screws must be used.*

Number of screw packs required by plate size (specify TEK Screws or TORK screws).

	22"-25"	26"-33"	34"-41"	42"-48"
4"-8"	1	1	1	1
9"-16"	1	1	1	1
17"-24"	1	1	1	2
25"-32"	1	1	2	2
33"-40"	1	2	2	2
41"-48"	2	2	2	2

Finishes *brass 24" x 48" max. size*

US Number	US3	US4	US10	US10B	US15	US26	US26D
BHMA	605	606	612	613	619	625	626

Finishes *stainless steel*

US Number	US32	US32D
BHMA	629	630

Finishes *aluminum*

US Number	US28
BHMA	628

Finishes *plastic*

Clear and Black

Residential Grade Kickplates available Carded only, finishes PA28, PA3, PA619, PA716, B3, B505, B619, B716



WS406CVX & WS407CVX
Meets ANSI/BHMA 156.16 L22201 for brass, and L52101 for stainless steel.

WS406CCV & WS407CCV
Meets ANSI/BHMA 156.16 L22251 for brass and and L52251 for stainless steel.

WS406CVX Wall Bumpers
WS406CCV
WS407CVX
WS407CCV

- Constructed in sturdy yet economical wrought base of brass or stainless steel construction.
- Feature concealed tamper-proof mounting.
- Shipped factory preassembled backplate to reduce installation cost.
- Easy installation by inserting screwdriver through small hole in rubber.

WS406CVX (406) – convex rubber bumper, packed with wood screw and plastic anchor.
WS406CCV (406-1/2) – concave rubber bumper, which avoids damage to locks with projecting buttons, packed with wood screw and plastic anchor.
WS407CVX (407) – convex rubber bumper packed with screw and drywall anchor.
WS407CCV (407-1/2) – concave rubber bumper which avoids damage to locks with projecting buttons and is packed with screw and drywall anchor.

Dimensions

Base Diameter: 2-1/2"
Base Thickness: 3/8"
Overall Projection: 1"

Finishes *brass*

Ives Number	US3	US4	US5*	US10	US10B	US15	US15A**	US26	US26D	B716**
BHMA	605	606	609*	612	613	619	620	625	626	

Finishes *stainless steel*

Ives Number	US32D
BHMA	630

** only available on WS407CVX Slim-Pak of 15*

*** available on WS407CCV or WS407CVX Slim-Pak of 15*

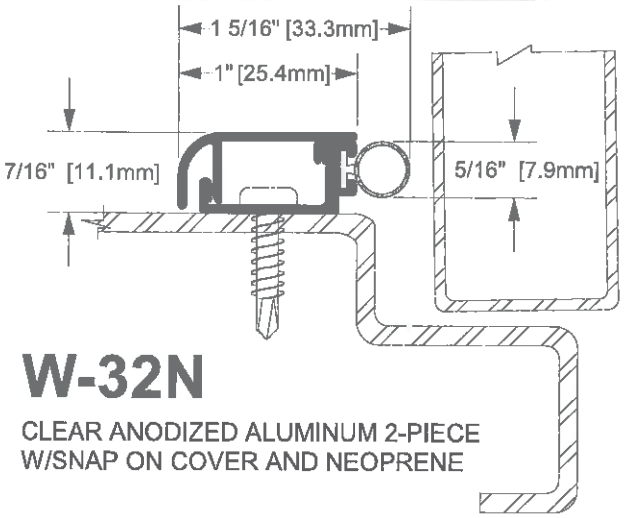

W-32N

CLEAR ANODIZED ALUMINUM 2-PIECE
W/SNAP ON COVER AND NEOPRENE

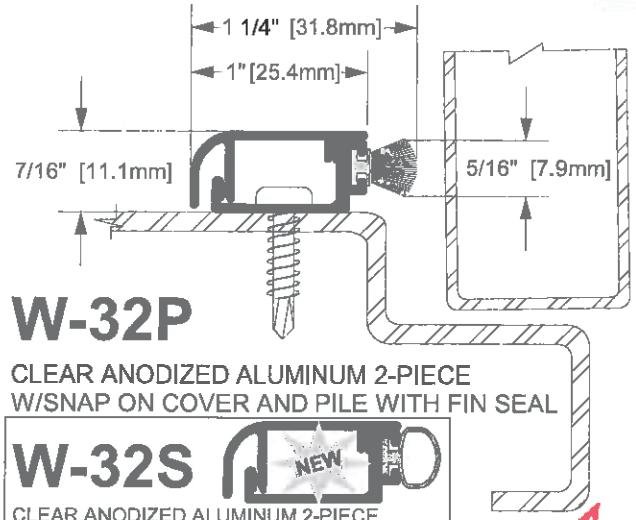

W-32P

CLEAR ANODIZED ALUMINUM 2-PIECE
W/SNAP ON COVER AND PILE WITH FIN SEAL

W-32S

NEW

CLEAR ANODIZED ALUMINUM 2-PIECE
W/SNAP ON COVER AND SILICONE

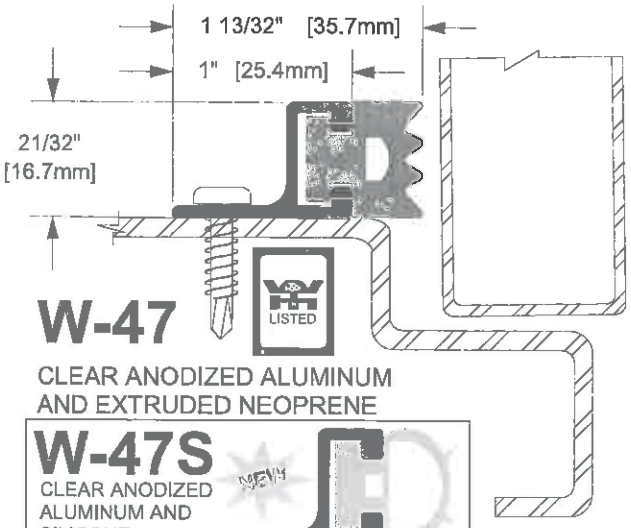

W-47

LISTED

CLEAR ANODIZED ALUMINUM
AND EXTRUDED NEOPRENE

W-47S

NEW

CLEAR ANODIZED
ALUMINUM AND
SILICONE

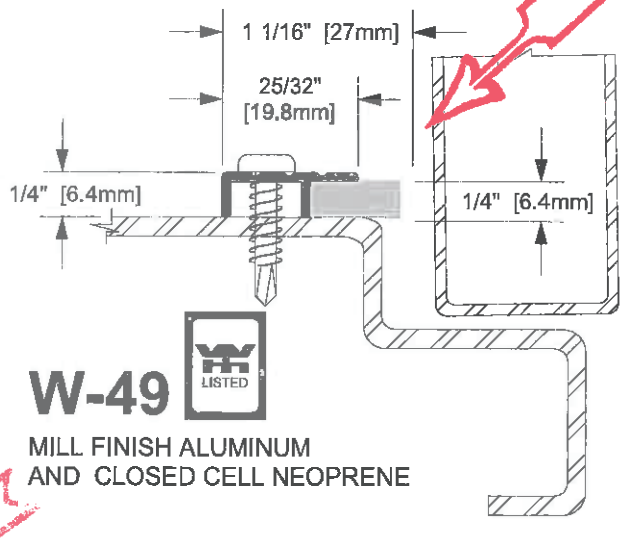

W-49

LISTED

MILL FINIFH ALUMINUM
AND CLOSED CELL NEOPRENE

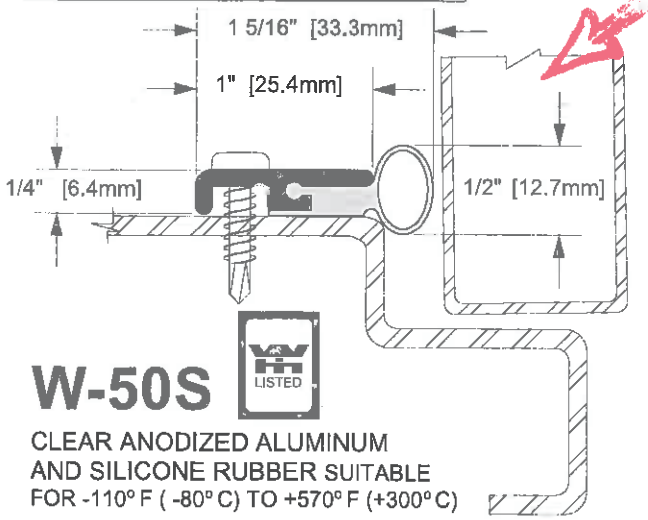

W-50S

LISTED

CLEAR ANODIZED ALUMINUM
AND SILICONE RUBBER SUITABLE
FOR -110° F (-80° C) TO +570° F (+300° C)

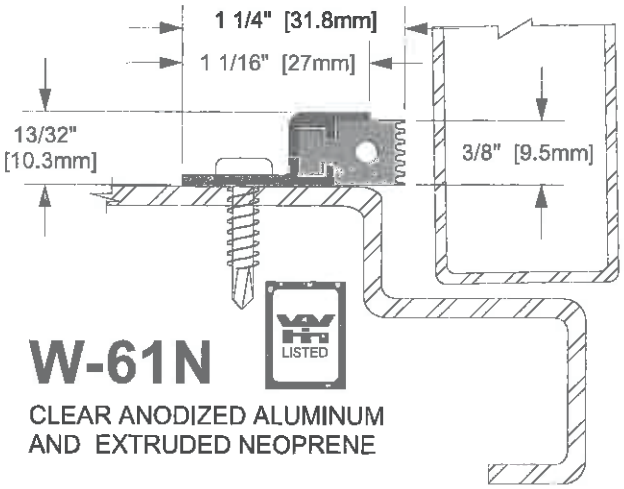

W-61N

LISTED

CLEAR ANODIZED ALUMINUM
AND EXTRUDED NEOPRENE

SWEEPS

ALL PRODUCTS ON THIS PAGE

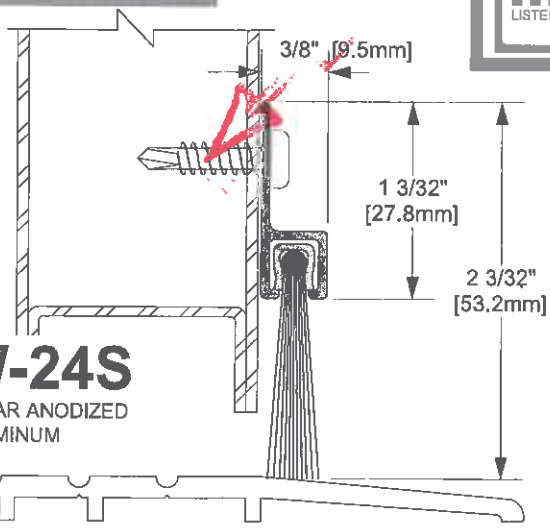

W-24S
CLEAR ANODIZED ALUMINUM

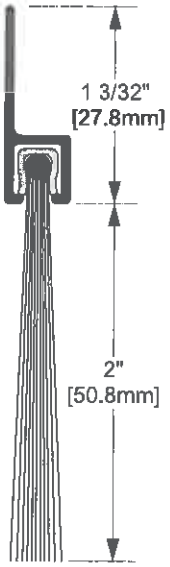

W-33S
CLEAR ANODIZED ALUMINUM

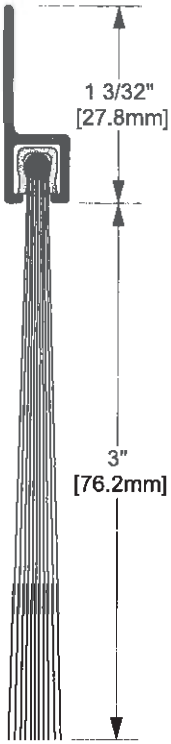

W-34S
CLEAR ANODIZED ALUMINUM

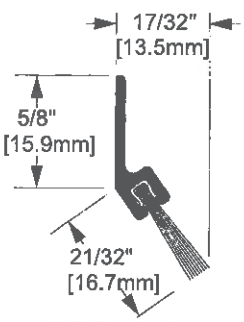

W-23
CLEAR ANODIZED ALUMINUM

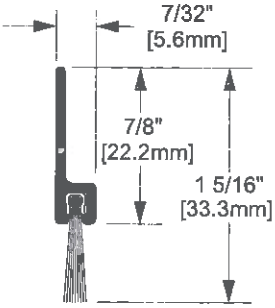

W-25S
CLEAR ANODIZED ALUMINUM

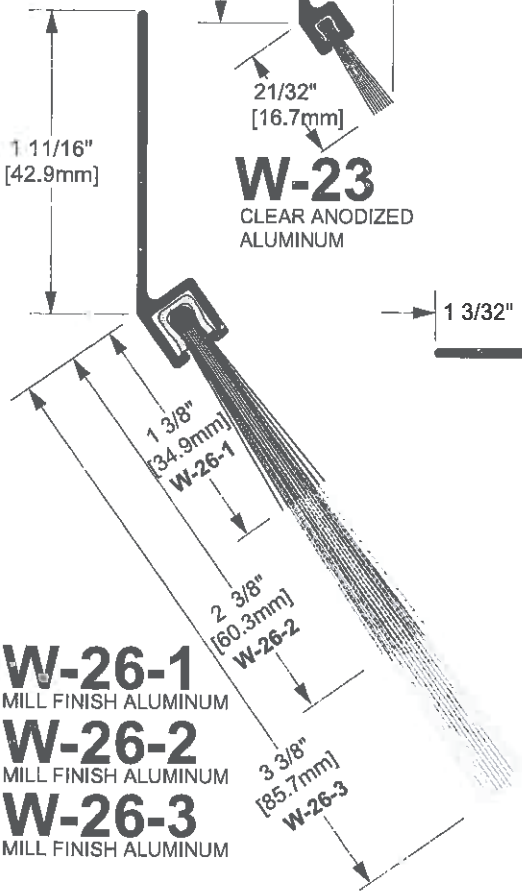

W-26-1
MILL FINISH ALUMINUM

W-26-2
MILL FINISH ALUMINUM

W-26-3
MILL FINISH ALUMINUM

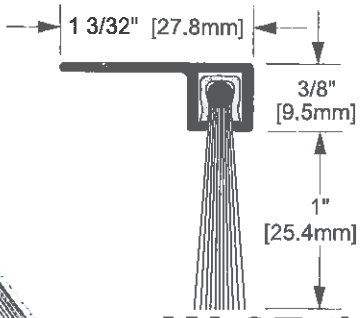

W-37-1
CLEAR ANODIZED ALUMINUM

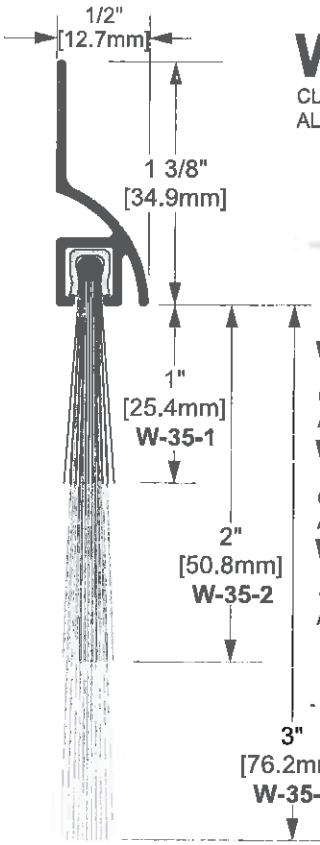

NEW

W-35-1
CLEAR ANODIZED ALUMINUM

W-35-2
CLEAR ANODIZED ALUMINUM

W-35-3
CLEAR ANODIZED ALUMINUM

1/2" THERMAL BREAK THRESHOLDS

ALL PRODUCTS ON THIS PAGE

CT-44
EXTRUDED ALUMINUM WITH RIGID P.V.C.

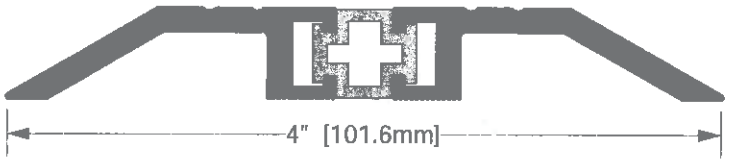

CT-45
EXTRUDED ALUMINUM WITH RIGID P.V.C.

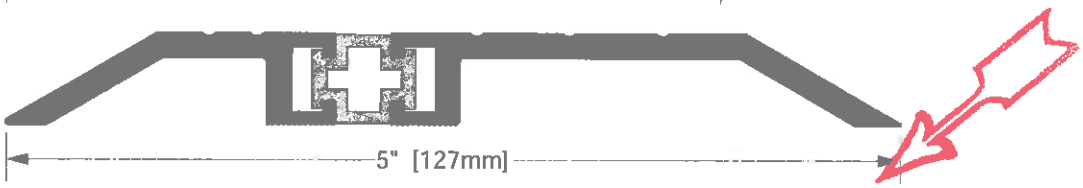

CT-46
EXTRUDED ALUMINUM WITH RIGID P.V.C.

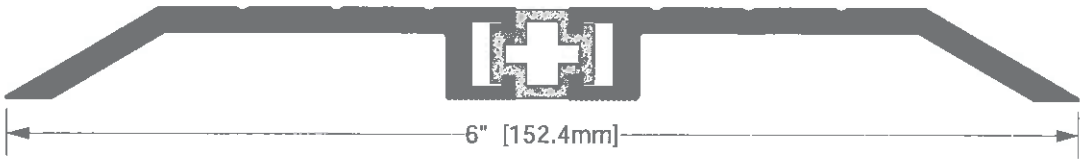

CT-406
EXTRUDED ALUMINUM WITH RIGID P.V.C.

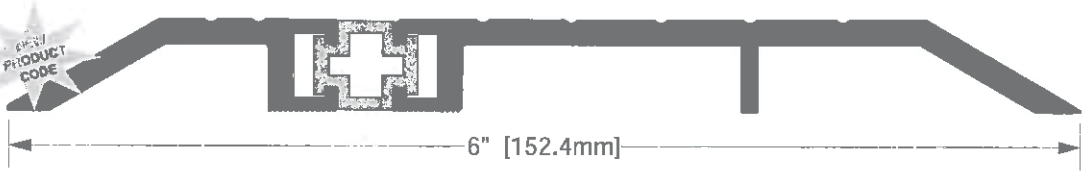

CT-407
EXTRUDED ALUMINUM WITH RIGID P.V.C.



CT-408
EXTRUDED ALUMINUM WITH RIGID P.V.C.

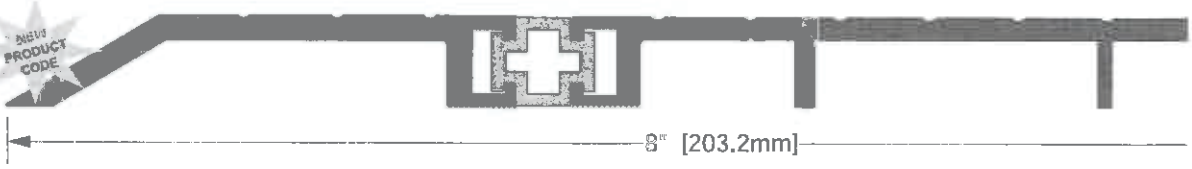

CT-409
EXTRUDED ALUMINUM WITH RIGID P.V.C.

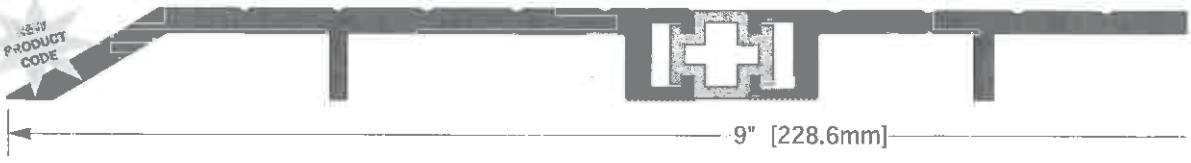

CT-410
EXTRUDED ALUMINUM WITH RIGID P.V.C.

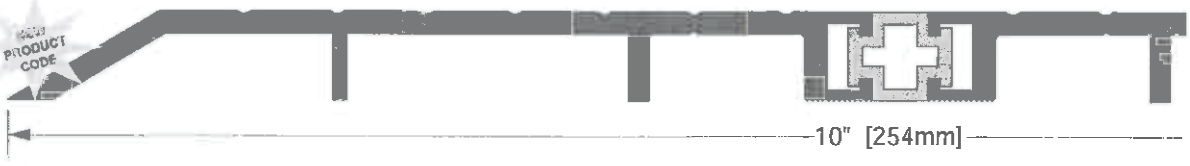

CT-410-2
EXTRUDED ALUMINUM WITH RIGID P.V.C.

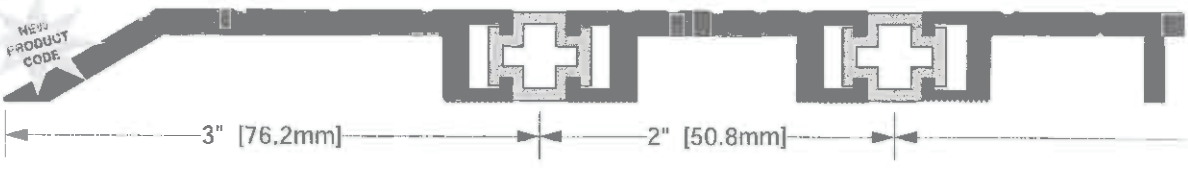

ALLEGION

SCHLAGE

Door position switches

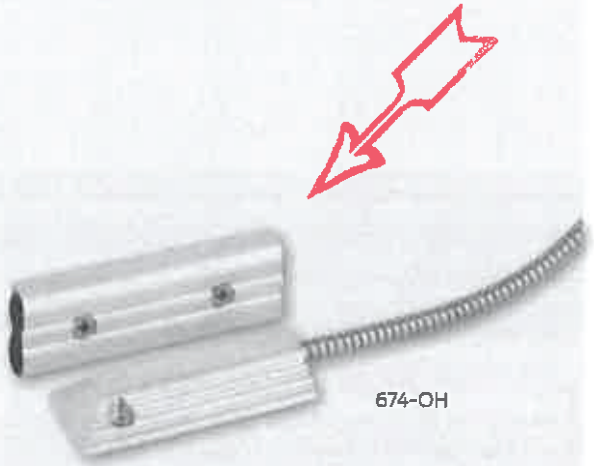

674-OH

Overhead door, floor mount magnetic switch

Overview

Door position switches are used to detect the open or closed status of an opening and then send this status to a control panel. They come in a variety of shapes and sizes and are designed for monitoring door positions, roof hatches, gates etc.

Concealed SPDT magnetic switches

For wood doors and frames
0.3 Amps @ 30 VDC



679-05

For hollow metal doors and frames
0.3 Amps @ 30 VDC



679-05 HM

For wood doors and metal frames
0.3 Amps @ 30 VDC



679-05 WD

Concealed/flush mount magnetic switches
For aluminum, wood and hollow metal doors 0.25 Amps @ 30 VDC
UL Listed



7764

Surface mount magnetic switches
For aluminum, wood and hollow metal doors 0.25 Amps @ 30 VDC
UL Listed



7766

SUBMITTALS IDENTIFICATION SHEET

PROJECT: Wastewater Treatment Plant Upgrade
Iqaluit, Nunavut

NUNAMI
STANTEC LIMITED

1088C Noble House
Iqaluit NU
www.stantec.com

CONTRACTOR: Kudlik Construction Ltd, Project 2018-062

Telephone: 867-979-1166

E-mail: srousseau@kudlik.biz

SUBCONTRACTOR:

Person responsible:

Telephone: () E-mail:

PRODUCT SUBMITTED:

☑ As Specified

☐ Alternate

SUPPLIER or MANUFACTURER: Cascadia

Person responsible: Vincent M. W. Liu

Telephone: 604-857-4600 E-mail: mliu@cascadiawindows.com

DESCRIPTION OF SUBMITTAL: windows

# of pages:

Reference to drawings:

Reference to specs:

Division: 08 Section: 08 54 13

REMARKS:

REVIEW AND COMMENTS (for use by Consultants):

STANTEC PROJECT #: 110126045

SUBMITTAL # SU-003rev1

This review by Stantec is for general conformance with the design concept of Stantec's design of the:

☐ Architectural ☐ Structural ☐ Mechanical ☐ Electrical ☐ Other

component(s) only and does not mean that Stantec has verified or approves the shop drawing(s). The Contractor remains solely responsible for the shop drawing(s) and this review by Stantec does not relieve the Contractor of the Contractor's responsibility for errors or omissions in the shop drawing(s) or for meeting all requirements of the contract documents. This review does not mean that Stantec approves the detailed design inherent in the shop drawing, responsibility for which shall remain with the Contractor submitting same, nor does this review mean that Stantec accepts any deviation of the shop drawing(s) from the contract documents. The Contractor is responsible for confirming all dimensions and correlating them at the job site, for all construction means, methods and techniques, and for coordination of construction work of all trades, including coordination of all shop drawings.

Stantec

☐ REVIEWED

☑ REVIEWED, AS NOTED

☐ REVISE AND RESUBMIT

☐ NOT REVIEWED

DATE 2018-06-19

BY Jason King

Review of this submission is for compliance with general intent of the contract. This review does not relieve the Sub-Contractor, Supplier or Manufacturer of responsibility for error or omissions in the submission or the responsibility of meeting all requirements of the contract documents. Any deviation from the contract documents initiated by the Sub-Contractor, Supplier or Manufacturer shall be at their sole risk. QUANTITIES AND DETAIL DIMENSIONS ARE THE SUB-CONTRACTORS OR SUPPLIERS RESPONSIBILITY. VERIFY DATA WITH FIELD DIMENSIONS.

SUBMITTAL TRACKING No.: **SU-003 rev1**

2018-06-18

PROJECT INFORMATION

NAME: WWTP IQALUIT
OWNER:
CIVIC ADDRESS: IQALUIT, NU

CLIENT

NAME: PILITAK ENTERPRISES LTD
CONTACT: SANDRA ROUSSEAU
ADDRESS: 1519 FFEDERAL ROAD
IQALUIT, NU, X0A 0H0
PHONE: 418-871-3368 EXT.257

CASCADIA PRODUCTS

UNIVERSAL SERIES FIBERGLASS FIXED INTERIOR GLAZED WINDOWS
- STRAP ANCHOR ATTACHMENT
- FLASHING ATTACHMENT ANGLE
- 1"x1"x1/16" ALUMINUM SILL ANGLE

FRAME FINISH

EXTERIOR – ROYAL BLUE (56081)
INTERIOR – ROYAL BLUE (56081)

GLAZING SCHEDULE

ALL INSULATED GLAZING UNITS AS MANUFACTURED BY CARDINAL INDUSTRIES.

[G1] TYPICAL IGU:

EXTERIOR – 4mm CLEAR ANNEALED
CARDINAL 366 LOW E COATING
ON #2 SURFACE
ARGON FILLED SPACE
STAINLESS STEEL SPACER BAR
MIDDLE – 4mm CLEAR ANNEALED
ARGON FILLED SPACE
STAINLESS STEEL SPACER BAR
INTERIOR – 4mm CLEAR ANNEALED
CARDINAL 180 LOW E COATING
ON #5 SURFACE

DESIGN CRITERIA

NOTE:

DESIGN REQUIREMENTS ARE NOT INCLUDED IN CASCADIA'S SCOPE.

ASSUMED DESIGN PRESSURE = PG 40.

CLIENT TO CONFIRM THE ACTUAL DESIGN PRESSURE.

STRUCTURAL NOTES

THE STRUCTURAL DESIGN OF THE WINDOW AND DOOR SYSTEMS AS ILLUSTRATED ON THESE SHOP DRAWINGS ARE BASED ON THE ASSUMPTION OF TRANSFERRING ALL APPLICABLE LOADS TO THE ENTIRE FRAME'S PERIMETER.
THUS, ALL MATERIALS COMPRISING THE PERIMETER WALL ASSEMBLY MUST BE CAPABLE OF TRANSFER AND/OR ACCEPTING THESE LOADS.
THE DESIGN OF THESE MATERIALS IS NOT THE RESPONSIBILITY OF CASCADIA.

CASCADIA WINDOW AND DOOR SYSTEMS HAVE BEEN DESIGNED FOR LATERAL, SEISMIC AND WIND DEFLECTIONS AND LOADS IN ACCORDANCE WITH THE APPLICABLE BUILDING CODE(S).

STRUCTURAL DRAWINGS ARE TO BE READ IN CONJUNCTION WITH ARCHITECTURAL DRAWINGS AND SPECIFICATIONS.

SHOP DRAWING REVIEW GUIDELINES

THESE SHOP DRAWINGS MUST BE REVIEWED AND STAMPED BY THE CONTRACTOR AND CONSULTANTS PRIOR TO CASCADIA ORDERING ANT MATERIALS FROM SUPPLIERS.

THE ACT OF STAMPING AND SIGNING THESE SHOP DRAWINGS, WITHOUT OUTRIGHT REJECTION, HAS IMPLIED GENERAL COMPLIANCE.

ONCE REVIEWED, APPROVED AND STAMPED AS "FINAL", THESE SHOP DRAWINGS SHALL GOVERN AND TAKE PRECEDENCE OVER ANY OTHER CONFLICTING INFORMATION(SUCH AS ARCHITECTURAL DRAWINGS OR OTHER TRADE'S DRAWINGS) FOR CASCADIA'S SCOPE OF WORK.

PRIME CONSULTANT'S RESPONSIBILITIES:

REVIEW ELEVATION CONFIGURATIONS INCLUDING ASSOCIATED DETAILS.

VERIFY HANDINGS OF WINDOW CASEMENT VENTS AND DOORS.

DESIGNATE THE ACTIVE LEAF ON ANY/ALL PAIRS OF DOORS.

DEFINE ANY/ALL OBSCURE GLAZING REQUIREMENTS.

CODE COMPLIANCE REQUIREMENTS MUST BE INDICATED BY SPECIFIC LOCATION AND INCLUDE BUT NOT LIMITED TO THE FOLLOWING:

–SAFETY GLASS DUE TO ANY CODE REQUIREMENTS OTHER THAN WIND, SEISMIC AND THERMAL STRESS LOAD.
–ACOUSTICAL PERFORMANCE REQUIREMENTS
–VENT RESTRICTORS
–VENT LOCATIONS REQUIRING EGRESS
–MULLIONS REQUIRING CLIMB DETERRENTS
–ACCESSIBILITY REQUIREMENTS
–CLEAR OPENING REQUIREMENTS FOR DOORS

ENSURE THAT ALL FIREPLACE EXHAUST MUST BE DESIGNED TO VENT AWAY FROM THE WINDOW/DOOR SYSTEM.

ENSURE CODE COMPLIANCE WITH RELATIONSHIP TO PROXIMITY TO WINDOW/DOOR OPENINGS.

GENERAL CONTRACTOR'S RESPONSIBILITIES:

DISTRIBUTE, IN A TIMELY MANNER, ALL ISSUES OF THESE SHOP DRAWINGS TO THE DESIGN AUTHORITY AND ANY OTHER NECESSARY PARTIES.

REVIEW AND ACCEPT DIMENSIONS AND QUANTITIES.

CONFIRM THAT ROUGH OPENING SIZES ARE THE SAME FOR TYPICAL FLOORS.

ENSURE OTHER TRADE WORK COMPLIES WITH OUR REQUIREMENTS.

CASCADIA MUST BE NOTIFIED 3 WORKING DAYS PRIOR TO ANY ON-SITE TESTING.

FOR FIELD VERIFIED DIMENSIONS:

CHECK AND VERIFY ALL ROUGH OPENING SIZES WITH THE ARCHITECTURAL DRAWINGS.

REVIEW/APPROVAL STAMPS

ARCHITECT/CONSULTANT'S STAMP:

CONTRACTOR'S STAMP:

CASCADIA WINDOWS

CASCADIA WINDOWS LTD.

#101-5350 275TH STREET
LANGLEY, BC CANADA V4W 0C1
604-857-4600

DRAWING LIST

1.1 SPECIFICATIONS & NOTES
2.1 WINDOW SCHEDULE
3.1 INSTALLATION DETAILS

TOTAL = 3 PAGES

FENBC Cascadia Windows & Doors 2018 MEMBER IN GOOD STANDING

SUBMITTAL

1ST SUBMITTAL

PROJECT TITLE:
WWTP IQALUIT

ISSUE	DESCRIPTION	DATE
1	1ST SUBMITTAL	JUN.15/18

DRAWING TITLE:
SPECIFICATIONS & GENERAL NOTES

SCALE: N.T.S.
DATE: JUNE 15/2018
DRAWN BY: CP
PROJECT #: 5935
DRAWING NO.: 1.1

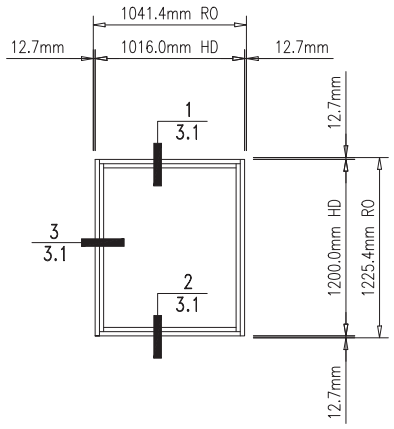

△
FLOOR
LEVEL

W1	INT. GLAZED UNIVERSAL WINDOW	
	REQUIRED AS SHOWN	2

CASCADIA
WINDOWS LTD.
#101-5350 275TH STREET
LANGLEY, BC CANADA V4W 0C1
604-857-4600

FENBC
Cascadia
Windows & Doors
2018
MEMBER IN GOOD STANDING

PROJECT TITLE:
WWTP
IQALUIT

ISSUE	DESCRIPTION	DATE
1	1ST SUBMITTAL	

DRAWING TITLE:
WINDOW
SCHEDULE

SCALE: N.T.S.
DATE: JUNE 15/2018
DRAWN BY: CP
PROJECT #: 5935

DRAWING NO.:
2.1

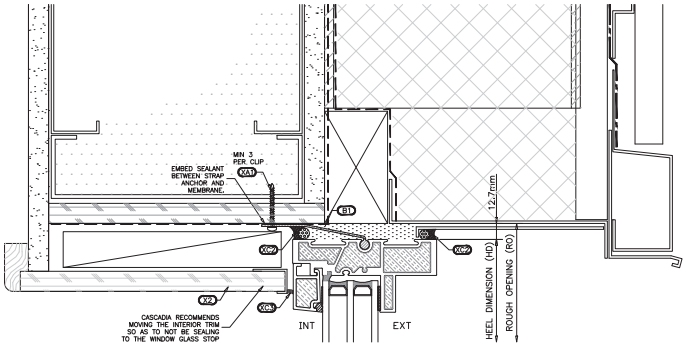

1 FIXED HEAD
INT. GLAZED UNIVERSAL WINDOW

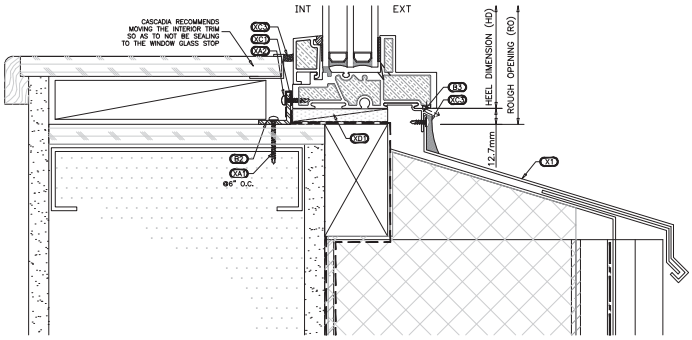

2 FIXED SILL
INT. GLAZED UNIVERSAL WINDOW

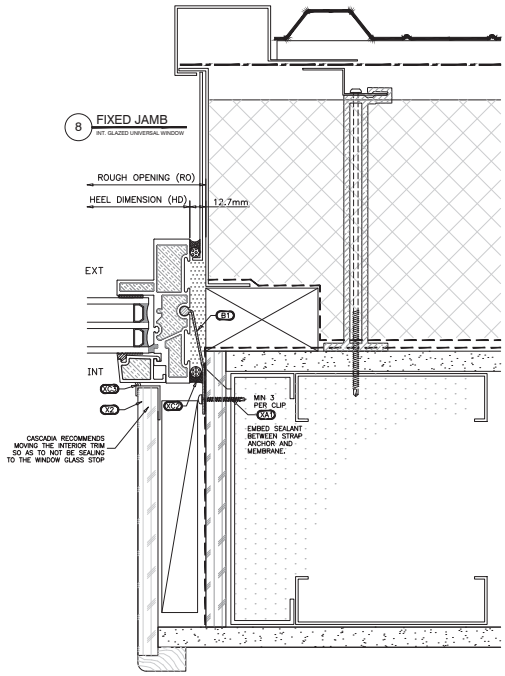

8 FIXED JAMB
INT. GLAZED UNIVERSAL WINDOW

NOTES:
- DETAILS ARE FOR STRUCTURAL INSTALLATION PURPOSES ONLY. ALL OTHER DETAILS ARE TO BE REFERENCED TO THE ARCHITECTURAL DRAWINGS AND ENVELOPE DETAILS. CASCADIA WINDOWS & DOORS NEITHER APPROVES NOR DISAPPROVES THE ENVELOPE DETAILS OR STRUCTURE OF THE BUILDING.
- INSTALLERS TO ENSURE THAT WINDOWS & DOORS ARE INSTALLED LEVEL, PLUMB & SQUARE WITH ALL APPROPRIATE FASTENING & SHIMMING.
- REFER TO BUILDING ENVELOPE DETAILS FOR MEMBRANING, SEQUENCING, FINISHING & SEALING INSTRUCTIONS.
- BACKER RODS BEHIND SEALANT BEADS IN GLAZING POCKET ARE A DISCRETIONARY COMPONENT AND ARE REQUIRED ONLY WHEN GAP BETWEEN GLASS AND WINDOW FRAME EXCEEDS APPROXIMATELY 1/8".
- SEE ADDITIONAL COUPLING INSTRUCTIONS WHEN COUPLING IS REQUIRED.

FENBC Cascadia Windows & Doors 2018 MEMBER IN GOOD STANDING

CASCADIA WINDOWS
CASCADIA WINDOWS LTD.
#101-5350 275TH STREET
LANGLEY, BC CANADA V4W 0C1
604-857-4600

LEGEND

XA1	#10 X 1 1/2" STAINLESS STEEL SELF DRILLING SCREWS @ 6"O.C. OR AS NOTED. BY OTHERS
XA2	#10 X 3/4" STAINLESS STEEL SELF DRILLING SCREWS @6"O.C. BY OTHERS
B1	EXTRUDED ALUMINUM UNIVERSAL ANCHOR CLIP BY CASCADIA. SPACING PER ATTACHED GUIDE.
B2	1"x1"x1/8" CONTINUOUS ALUMINUM ANGLE BY CASCADIA
B3	ALUMINUM FLASHING ATTACHMENT ANGLE BY CASCADIA SCREWS & INSTALL BY OTHERS.
XC1	SEALANT BEAD BETWEEN MEMBRANE AND FRAME BY OTHERS
XC2	ROD & SEALANT BY OTHERS
XC3	SEALANT BEAD BY OTHERS
XD1	PVC SHIMS @"O.C. & UNDER EACH VERTICAL. BY OTHERS
X1	METAL FLASHING BY OTHERS
X2	INTERIOR FINISHES BY OTHERS

PROJECT TITLE:
WWTP
IQUALUIT

ISSUE	DESCRIPTION	DATE
1	1ST SUBMITTAL	MAR.26/18

DRAWING TITLE:
INSTALLATION DETAILS

SCALE: N.T.S.
DATE: JUNE 15/2018
DRAWN BY: CP
PROJECT #: 5935
DRAWING NO.: 3.1

CASCADIA WINDOWS LTD.
TEL 604 857 4600
FAX 604 857 4606

27050 GLOUCESTER WAY
LANGLEY, BC CANADA V4W 3Y5

INFO@CASCADIAWINDOWS.COM
WWW.CASCADIAWINDOWS.COM

Sandra Rousseau
Iqaluit, NU

Project Name: WWTP Iqaluit
Project ID #: 5935

Dear Sandra:

Thank you for choosing Cascadia Windows & Doors for the WWTP Iqaluit project. It is our goal to assist you and your team towards a successful project! In an effort to achieve this goal and prior to proceeding with the production of your products, we require that you confirm the specifics of your order by reviewing this information/document package.

This package consists of useful information and documents that require your close attention to ensure that our understanding of your order is accurate. Further, review of this information package will assist you in preparing for the delivery and installation of your products.

The documents listed (1-7) below require initials and/or signatures to confirm your review and acceptance. Once we have received all the signed documents back, we will contact you and provide an estimated delivery date.

In addition to the information provided on this letter, attached is the following documents/information:

1. Supply Agreement
2. Terms & Conditions
3. Sample Warranty
4. Copy of applicable quote letter
5. Order Acknowledgement
6. Storage and Handling Requirements
7. Maintenance Documents

Supply Agreement
Please review the supply agreement for accuracy of your name, contact info, shipping address and specifics of the product you are ordering. Please sign the bottom of the Supply Agreement if everything is correct. If you require any modifications to the products, please mark any changes directly on the Supply Agreement and provide your initials beside the noted changes.

Terms & Conditions.
The Terms and Conditions of your order are indicated in this document.

Sample Warranty.
This document is a sample of the warranty that you will be receiving for the products. This warranty will be executed by us at the time of final payment.

Quote Letter.
This is a copy of the most recent quote letter that was provided to you.

CASCADIA
WINDOWS & DOORS

Order Acknowledgement.
Please note that your order is a custom order. The basic illustrations noted in the Order Acknowledgement represent our current understanding of your requested order. Please review, initial each page and sign the last page. Please ensure everything is thoroughly checked and confirmed. Any reorders or later changes are subject to a production initialization fee.

Storage & Handling Checklist.
Instructions on proper storage and handling of the products are provided in this checklist.

Maintenance Recommendations
Maintenance Recommendations are provided in this document.

Additional Important Information:

Installation Details, Engineering, Shop Drawings, Coupling Details & Hardware Adjustment Guides
Typical installation detail examples can be found on our website at: www.cascadiawindows.com/products.php. These installation details are available in pdf and Autocad formats. Your project designer can use these example details as a starting point for installation details specific to your project.

Please note; Cascadia is able to provide project specific engineering, shop drawings and/or installation guidelines for an additional fee to be determined on a per project basis. Longer lead times may be required.

Coupling details and hardware adjustment guides are also available on our website below the window installation details.

Preparing for your delivery if via Cascadia.
When Cascadia delivers product, it does so on a Tailgate Delivery basis only. Our driver(s) will not lift windows off the truck or into your storage area. Unless otherwise specified, our product arrives on A-Frame racks that are loaded on the deck of our 5-ton flatbed truck. You will need to coordinate, and provide, the appropriate manpower and/or equipment for off-loading.

Please note that double glazed windows typically weigh 5-7 lbs/sq ft; triple glazed windows weigh 8-10 lbs/sq ft. Due to the heavy weight of the windows and doors, a forklift onsite can be very beneficial to transport the A-Frames from the truck deck to the ground. A crane can also be very beneficial to transport the A-frames from the truck deck to the ground, or closer to the building. If you will be using a crane to offload the A-frame racks, please let us know at the time of ordering so that we can use the appropriate racks. Please feel free to contact your Cascadia Project Manager if you require further guidance on your delivery planning.

Product Service.
Adjustment Guides for Cascadia products are available on our website: www.cascadiawindows.com/products.php. If you require further assistance please feel free to contact your Cascadia Project Manager.

Thanks again for choosing Cascadia.

Please provide your signature below to confirm that the order is complete and ready for production.

Name of authorized project representative:

_____

Signature of authorized project representative: **Date:**

_____ _____

CASCADIA WINDOWS LTD.
#101 - 5350B 275th Street,
Langley, BC, V4W 0C1
TEL 604 857 4600
FAX 604 857 4606
INFO@CASCADIAWINDOWS.COM
WWW.CASCADIAWINDOWS.COM

SUPPLY QUOTATION & ORDER FORM ("Order")

Date:	2018-Jun-06
Purchaser's Name:	Pilitak Enterprises Ltd
Purchaser's Address:	1519 Federal Road, Iqaluit, NU, X0A 0H0
Contact for Purchaser:	Sandra Rousseau 418-569-5650
Project Name:	#5935 – WWTP Iqaluit
Project Location for Delivery:	1779 Route de l'Aéropot, L'Ancienne-Lorette, QC
Project Code:	COM

Cascadia Windows Ltd. ("Cascadia") provides this Quotation to supply Purchaser with the following quantity of window products (the "Products") in accordance with the attached order acknowledgment and the specifications noted below:

1	Products	Universal Series (Interior Glazed) windows (qty:2)
2	Hardware	N/A
3	Glass Type	Triple glazed units comprised of Cardinal Low E 366/180 glass with Argon fill and Stainless Steel spacer bar. 4/4/4 typical thickness, except where sizes dictate otherwise.
4	Frame Colour	Custom Colour In & Out (Matching to Royal blue 56081).
5	Screens	N/A
6	Attachment	Strap anchor attachment.
7	Engineering & Shop Drawings	Non-engineered Shop Drawings included. Please note: This includes up to 3 drawing revisions. A fee of $500 per succeeding revision will be charged in excess of 3.
8	Packaging	Crated.
9	Shipping	Included. Tailgate delivery only.
10	Dimensions	As per the attached Approved set of Shop Drawings. Dimensions shown are actual frame dimensions; rough openings are to be 1" larger in height and width. (Dimensions to be confirmed) Configurations are as viewed from the exterior.
11	Payment terms	50% deposit in accorda[illegible] cated in the Lower Mainland, Ca[illegible] y method is selected, pre-payme[illegible]
12	Schedule	This project is approxin[illegible] e required 6-8 weeks in advance [illegible]

Note to window width: please refer to Detail 7/A701 and detail 1/A702 and to elevation 4/A401. The architectural intend is that the metal flashing for the window and the door (D100.1) below line up. Window width has to follow this intend. Shop drawing to show that this intend is met.

Terms and Conditions: Any purchase or sale of prod[illegible]ns which are attached hereto and incorporated by reference.

Acceptance:
The Quotation contained herein will remain valid for thirty (30) days from the date referenced above, and this Order shall only become binding upon Cascadia's confirmation to Purchaser that the Order has been received and accepted. Upon Cascadia notifying Purchaser of acceptance of the Order, or Cascadia's delivery of any products as instructed by Purchaser, Cascadia's Terms and Conditions shall apply to the purchase and sale of such products.

Purchaser (signature): _____ **Date:** _____

Printed Name: _____

FIBERGLASS INNOVATION

Unit 101, 5350B 275th Street,
Langley, BC, Canada
V4W 0C1

Window Schedule

2018-06-06

SOLD TO: Pilitak Enterprises Ltd
1519 Federal Road
Iqaluit
NU

SHIP TO: 1779 Route de l'Aéropot
L'Ancienne-Lorette
QC

JOB NUMBER: 5935-001
JOB NAME: WWTP Iqaluit
CUSTOMER CODE: PILI10

NOTE: ALL CONFIGURATIONS ARE VIEWED FROM THE EXTERIOR.
SIZES GIVEN ARE ACTUAL FRAME SIZES, NOT THE ROUGH OPENING.

ITEM		QTY
W1 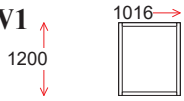	SERIES: Universal Windows SIZE: 1016 1200 GLASS LOW E TYPE: Low E 366/180 FRAME COL: Custom Colour NAIL FLANGE: No STRAP ANCHOR Yes **INTERIOR GLAZED**	2

CASCADIA UNIVERSAL SERIES™

PRELIMINARY DATA, DRAWINGS AND DETAILS

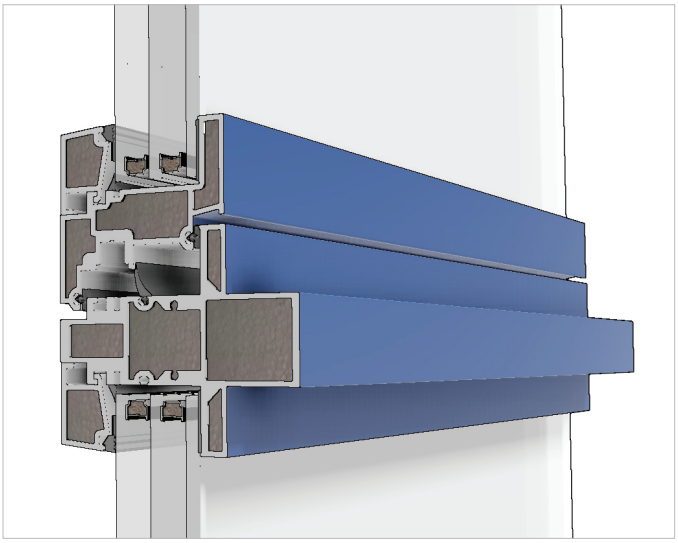

The Cascadia Universal Series™ is a new all-fiberglass fenestration system by Cascadia Windows & Doors. The latest in energy efficient window technology.

- Passive-House certified thermal performance
- All fiberglass (Red List Free materials)
- Commercial-grade strength and sizes
- Inward and outward operation in one system
- Easy on-site coupling

The Universal Series™ was designed by Cascadia Windows, in 2016, in British Columbia, Canada. The document that you are now reading was prepared during the same time that the tools and machinery needed to create this product were, themselves, still being created. Therefore, physical test data is not yet available. When it is, it will be published on our website www.cascadiawindows.com.

Drawings and installation details are finally released. Patents are pending.

CONFIGURATION OPTIONS

Vent operation, inswing	tilt & turn, hopper, swing door
Vent operation, outswing	casement, awning, swing door
Vent operation, sliding	sliding door (drawings coming soon)
Glazing	triple (standard); double (available)

PHYSICAL PERFORMANCE EXPECTATIONS

(BASED ON ANALYSIS AND/OR MODELLING)

Water penetration resistance	720 Pa (15 PSF) for all products
Air tightness	Far more airtight than A3, or Fixed
Thermal (fixed & operable)	Better than U-0.80 W/m^2 (0.14 Btu/hr ft^2 °F)

CASCADIA WINDOWS LTD.
#101-5350 275TH STREET
LANGLEY, BC CANADA V4W 0C1
INFO@CASCADIAWINDOWS.COM
WWW.CASCADIAWINDOWS.COM
TEL 604 857 4600
FAX 604 857 4606

MAY 2017

FIBERGLASS INNOVATION

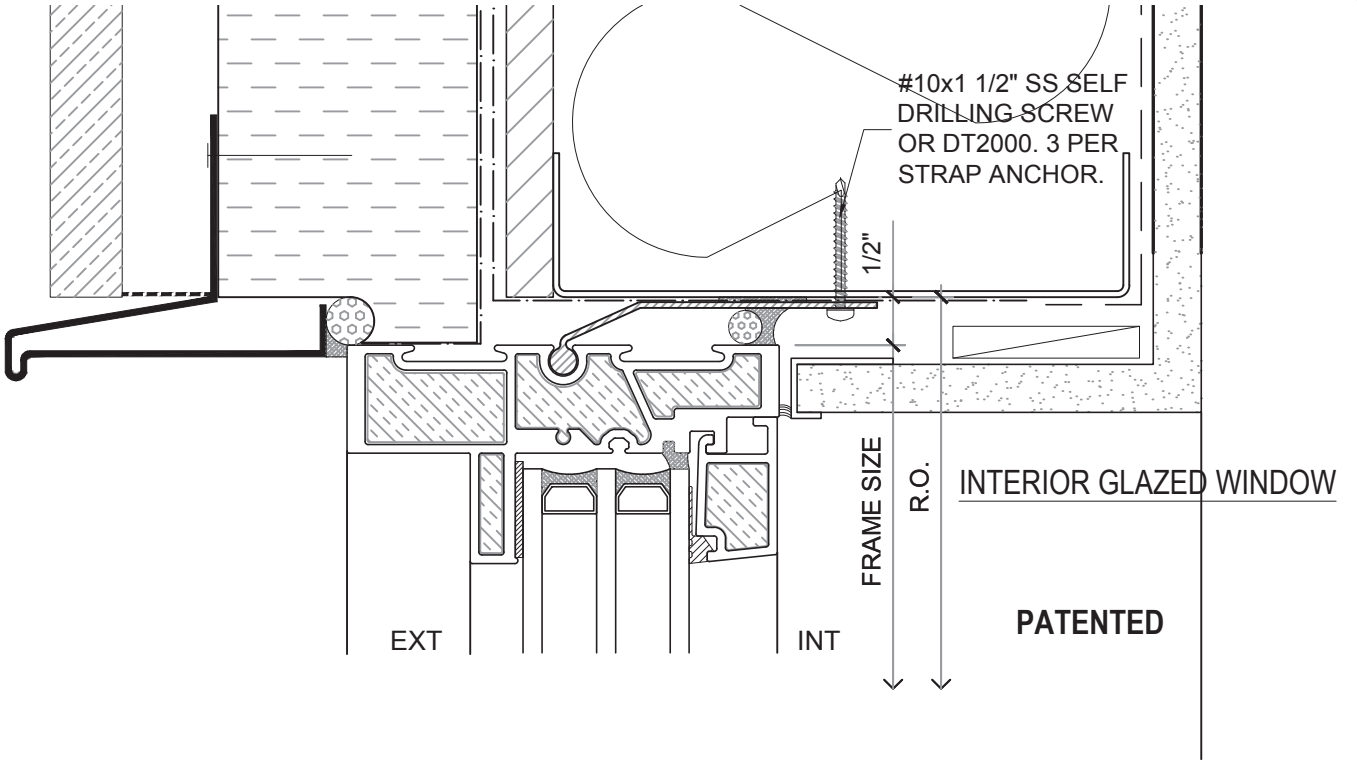

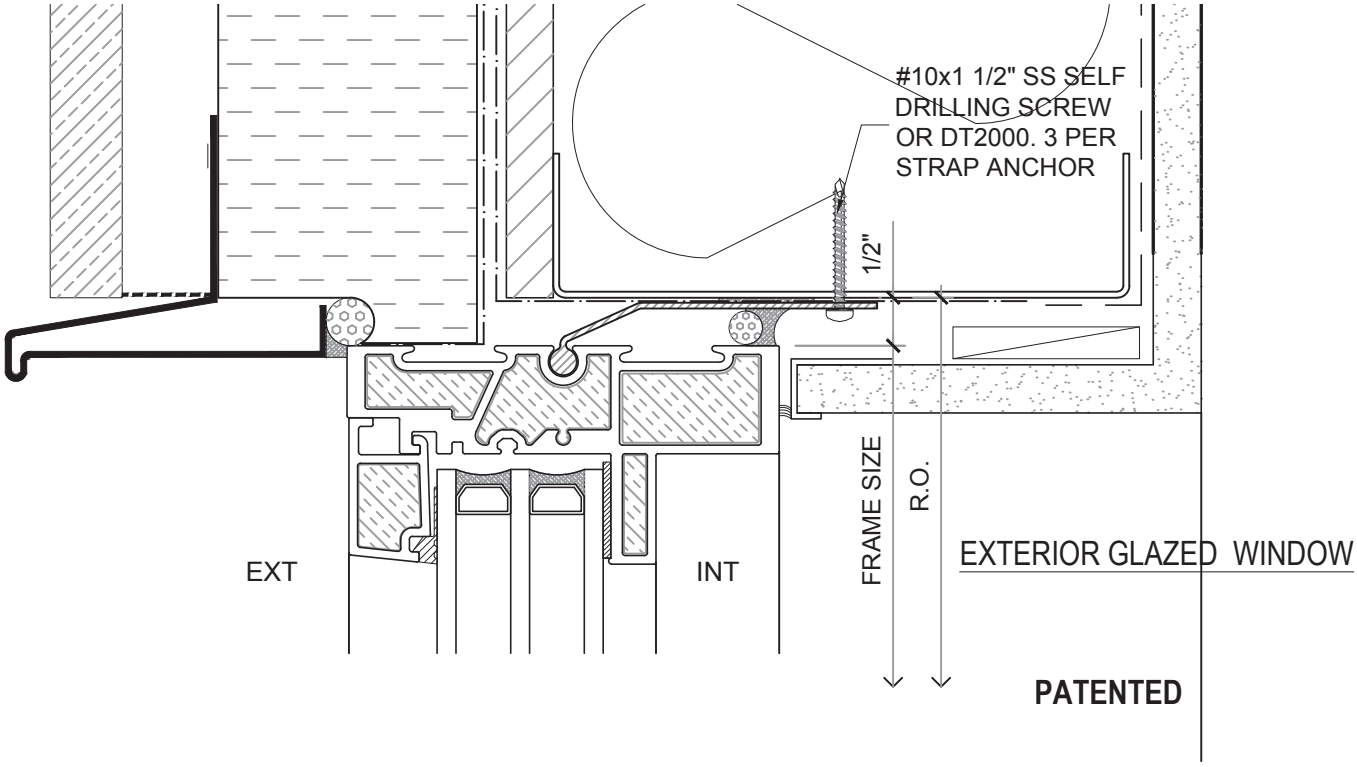

NOTE: "INTERIOR" & "EXTERIOR" REFERS TO THE WINDOW BEING INTERIOR OR EXTERIOR GLAZED

NOTE: *THIS DRAFT DETAIL IS FOR GENERAL ARRANGEMENT PURPOSES ONLY, AND DOES NOT NECESSARILY REPRESENT A DETAIL THAT IS APPROPRIATE FOR A SPECIFIC PROJECT. PRODUCTS AND ACCESSORIES PROVIDED BY CASCADIA MUST BE CONFIRMED FOR SPECIFIC PROJECTS.*

NOTE: ANCHOR CLIPS AT HEAD AND JAMBS ARE INTERMITTENT

CASCADIA WINDOWS LTD.
#101-5350 275TH STREET
LANGLEY, BC, CANADA V4W 0C1

DRAWING TITLE: UNIVERSAL SERIES - TYPICAL WINDOW HEADS
RAINSCREEN WALL ASSEMBLY, EXTERIOR INSULATION

DRAWING NO.: W-1.05

SCALE: 6" = 1'-0"	PATENTED	DATE: 16 APRIL, 2018	DRAWN BY: CP

PATENTED

INTERIOR GLAZED WINDOW

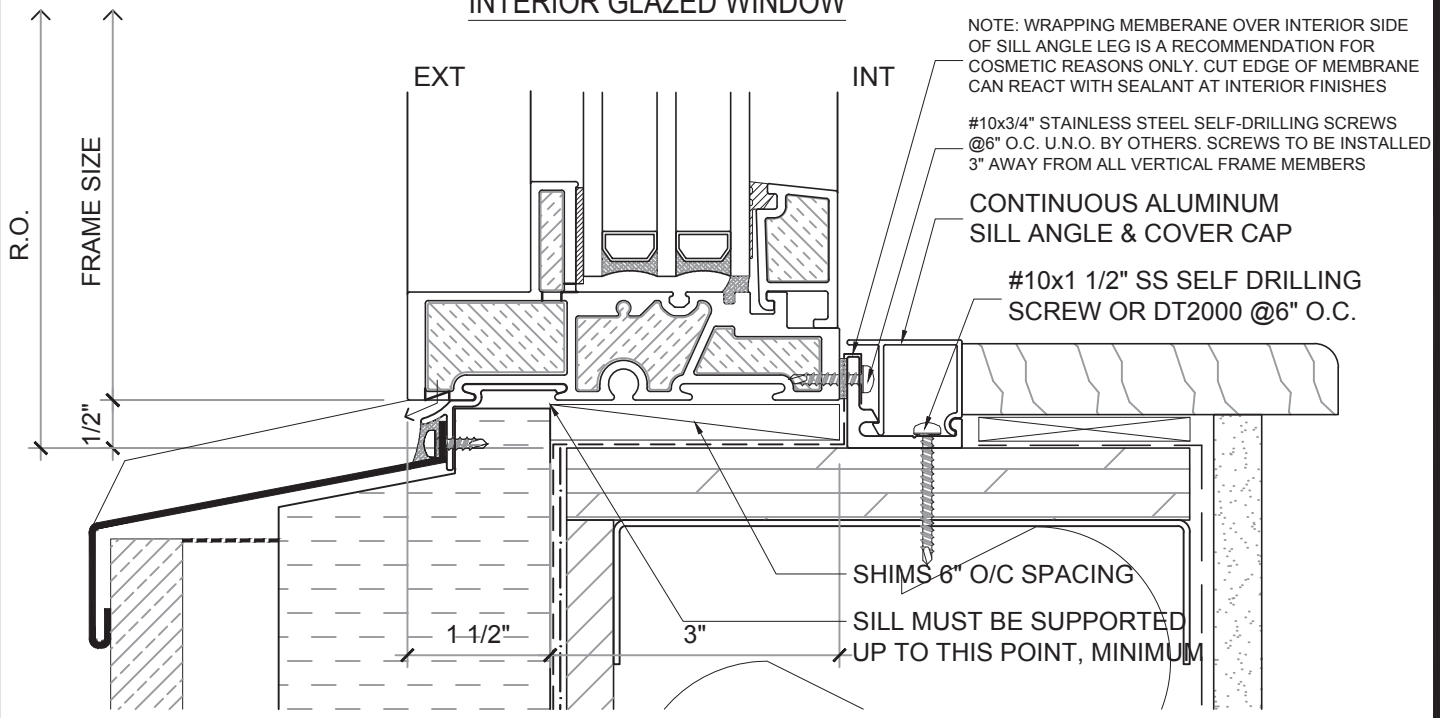

PATENTED

EXTERIOR GLAZED WINDOW

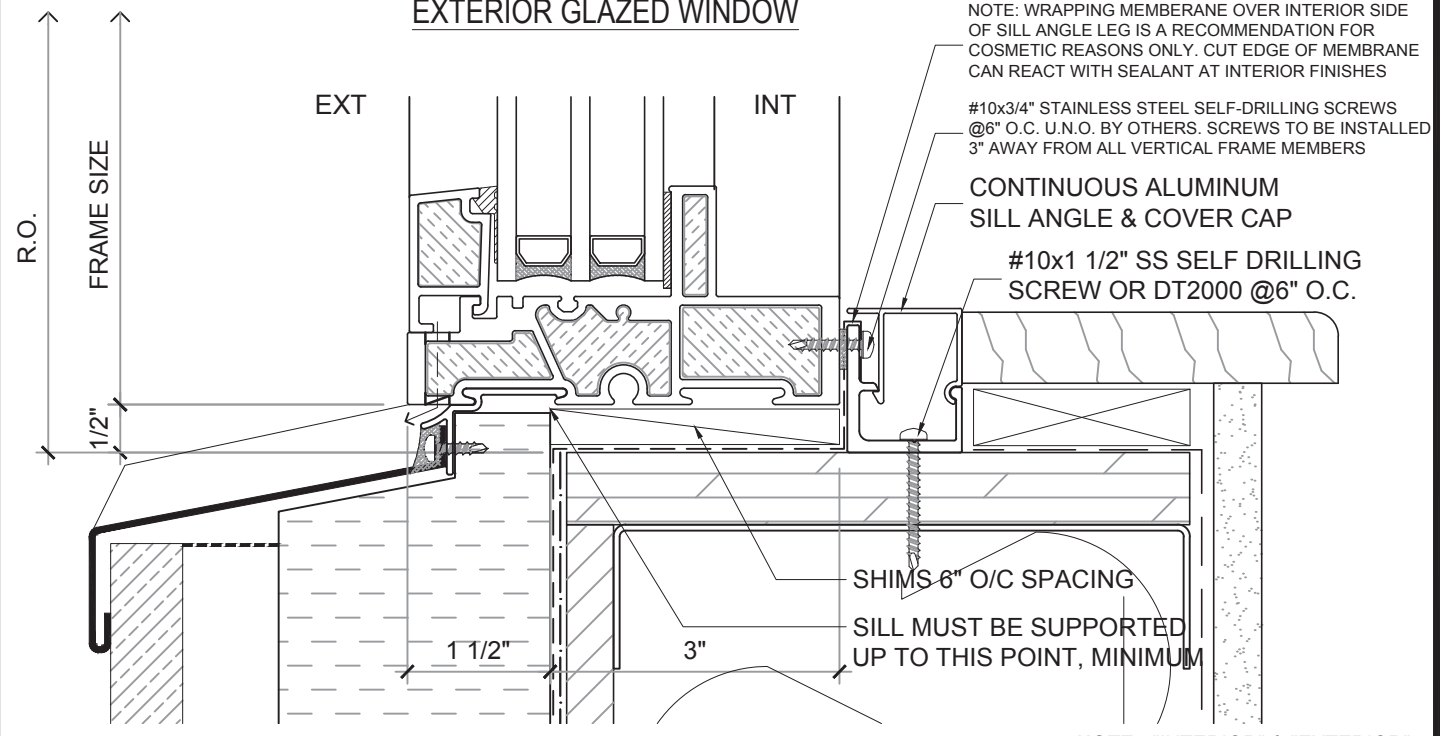

NOTE: *THIS DRAFT DETAIL IS FOR GENERAL ARRANGEMENT PURPOSES ONLY, AND DOES NOT NECESSARILY REPRESENT A DETAIL THAT IS APPROPRIATE FOR A SPECIFIC PROJECT. PRODUCTS AND ACCESSORIES PROVIDED BY CASCADIA MUST BE CONFIRMED FOR SPECIFIC PROJECTS.*

NOTE: "INTERIOR" & "EXTERIOR" REFERS TO THE WINDOW BEING INTERIOR OR EXTERIOR GLAZED

CASCADIA WINDOWS LTD.
#101-5350 275TH STREET
LANGLEY, BC, CANADA V4W 0C1

DRAWING TITLE: UNIVERSAL SERIES - TYPICAL WINDOW SILLS RAINSCREEN WALL ASSEMBLY, EXTERIOR INSULATION			DRAWING NO.: W-1.06
SCALE: 6" = 1'-0"	PATENTED	DATE: 16 APRIL, 2018	DRAWN BY: CP

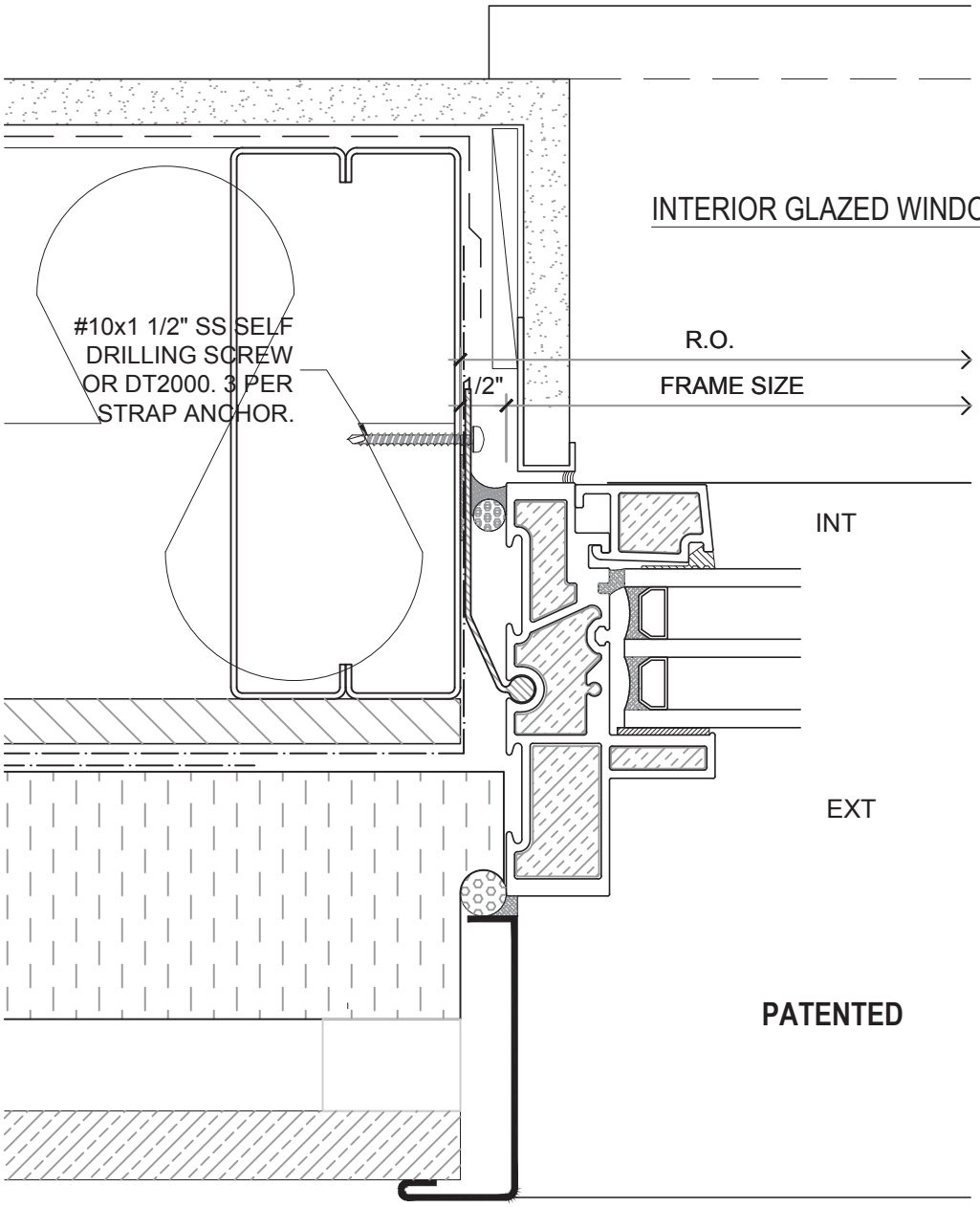

NOTE: "INTERIOR" & "EXTERIOR" REFERS TO THE WINDOW BEING INTERIOR OR EXTERIOR GLAZED

NOTE: *THIS DRAFT DETAIL IS FOR GENERAL ARRANGEMENT PURPOSES ONLY, AND DOES NOT NECESSARILY REPRESENT A DETAIL THAT IS APPROPRIATE FOR A SPECIFIC PROJECT. PRODUCTS AND ACCESSORIES PROVIDED BY CASCADIA MUST BE CONFIRMED FOR SPECIFIC PROJECTS.*

NOTE: ANCHOR CLIPS AT HEAD AND JAMBS ARE INTERMITTENT

CASCADIA WINDOWS LTD.
#101-5350 275TH STREET
LANGLEY, BC, CANADA V4W 0C1

DRAWING TITLE: UNIVERSAL SERIES - TYPICAL WINDOW JAMB RAINSCREEN WALL ASSEMBLY, EXTERIOR INSULATION				DRAWING NO.: W-1.07
SCALE: 6" = 1'-0"	PATENTED	DATE: 16 APRIL, 2018	DRAWN BY: CP	

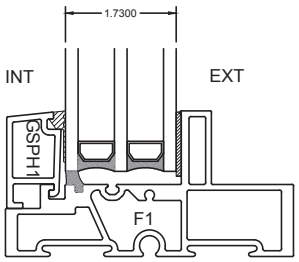

TRIPLE GLAZED
GLAZING STOP

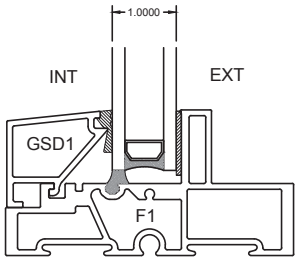

DOUBLE GLAZED
GLAZING STOP

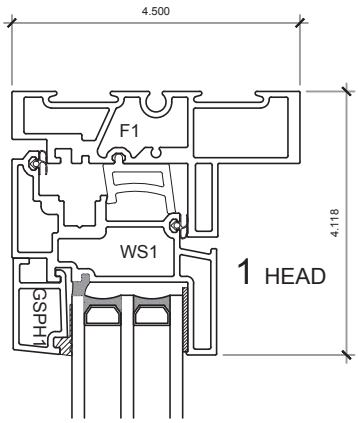

1 HEAD

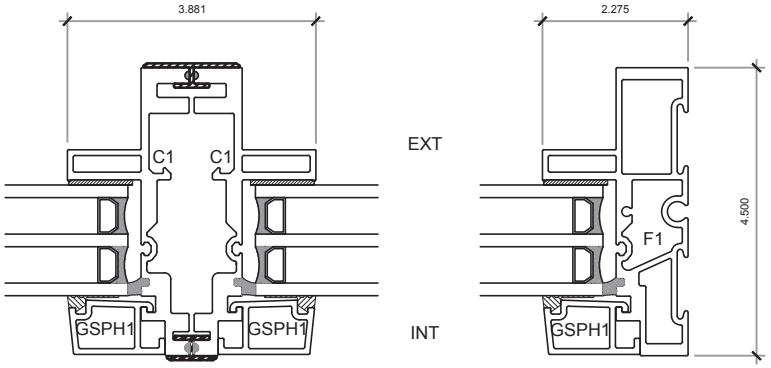

4 COUPLED MULLION

3 FIXED JAMB

INT EXT

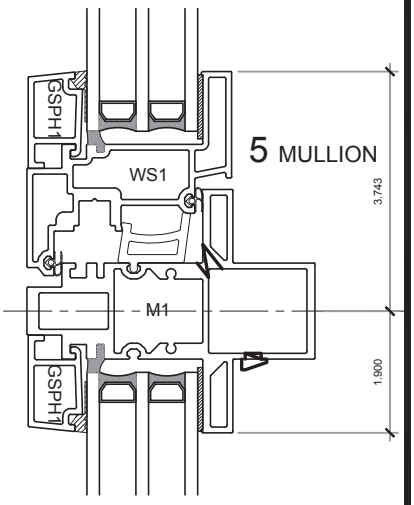

5 MULLION

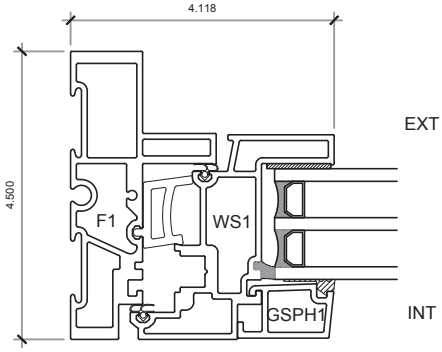

6 OPERABLE JAMB

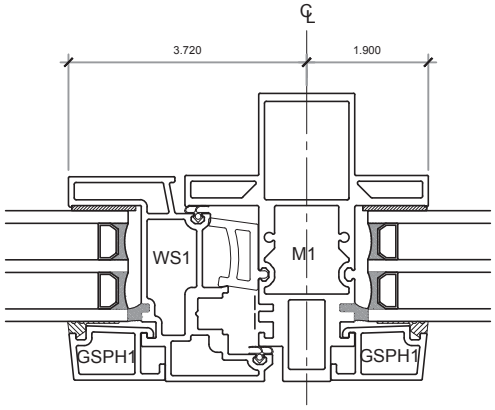

5 MULLION

INT EXT

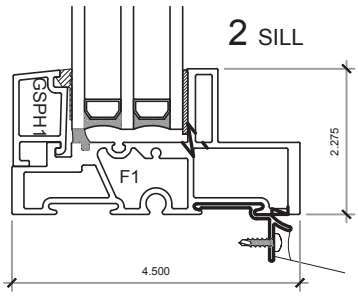

2 SILL

PATENTED

NOTE: *THIS DRAFT DETAIL IS FOR GENERAL ARRANGEMENT PURPOSES ONLY, AND DOES NOT NECESSARILY REPRESENT A DETAIL THAT IS APPROPRIATE FOR A SPECIFIC PROJECT. PRODUCTS AND ACCESSORIES PROVIDED BY CASCADIA MUST BE CONFIRMED FOR SPECIFIC PROJECTS.*

CASCADIA WINDOWS LTD. #101-5350 275TH STREET LANGLEY, BC, CANADA V4W 0C1	DRAWING TITLE: UNIVERSAL SERIES - INSWING WINDOW PRODUCT DRAWING			DRAWING NO.: W-2.02
	SCALE: 4" = 1'-0"	PATENTED	DATE: 16 APRIL, 2018	DRAWN BY: CP

CASCADIA WINDOWS LTD.
TERMS and CONDITIONS

1. Applicability Of Terms. These terms and conditions shall apply to, and govern, the purchase, sale and installation of any Cascadia Windows Ltd. ("Cascadia") products, whether or not such products are specifically identified in a Supply Quotation and Order Form. Cascadia hereby objects to any conflicting, additional and/or different terms contained in any purchase order or other documents provided by Purchaser, and the same shall not become part of these Terms and Conditions unless specifically authorized in writing by Cascadia's authorized representative.

2. Scope Of Order. Unless otherwise specified in the Order, the Purchase Price therein shall not include the provision by Cascadia of shop drawings, technical services, installation services or shipping. Such additional items may be provided by Cascadia for an additional charge.

3. Shop Drawings. If shop drawings are provided by Cascadia with respect to any Order, then such shop drawings shall take precedence over any other drawings, specifications or other requirements provided by, or on behalf of, Purchaser. In the event Purchaser does provide any drawings, details, specifications or other requirements, Cascadia assumes no liability whatsoever for its interpretation thereof, and Purchaser's acceptance of the shop drawings must be based on final approval by Purchaser or architects, engineers or other third parties retained by Purchaser.

4. Improper Installations or Designs. Purchaser is responsible for understanding the window and door configurations and requirements for proper installation of the products supplied by Cascadia, including but not limited to the rough opening sizing and technical requirements for the products supplied, and must prepare the project or building to allow for proper installations. Purchaser must ensure the accuracy and quality of window and door rough openings, including sizes, alignments, flashings, the quality of workmanship, and other building details as required to allow the products to function properly in conjunction with Cascadia's specified tolerances and requirements applicable to the products to be supplied. If products supplied by Cascadia are improperly installed, or if the project or building is improperly designed so as to affect the performance of supplied products, then Cascadia shall have no responsibility or liability where such improper installations or designs affect the performance of supplied products.

5. Lead Time Required Prior To Delivery. Provided that an Order has been accepted by Cascadia, written notice of the requested delivery date(s) must be given to Cascadia by Purchaser up to twelve (12) weeks prior to such requested delivery date(s). Cascadia shall not be liable for any delay in delivery due to any cause beyond Cascadia's control including, but not limited to, governmental action, strikes or other labour disputes, fire, damage or destruction of goods, manufacturers' shortages, inability to obtain materials, fuels or supplies, acts of God, or any other cause whatsoever beyond Cascadia's control.

6. Payment. Except as otherwise agreed upon in writing by Cascadia and Purchaser, fifty percent (50%) of the Purchase Price shall be due upon Purchaser's submission of the Order to Cascadia, which payment will be applied pro rata in partial payment for each item ordered. The balance of the Purchase Price shall be paid prior to delivery or shipment of the Products. Any amounts above and beyond the Purchase Price are due within thirty (30) days of the date of Cascadia's invoice for such additional amounts. All payments shall be submitted to Cascadia's address as shown in the Order, and must be made in the currency specified in the Order. Interest shall accrue on all past due amounts at the rate of one and one-half percent (1-1/2%) per month until paid in full. In the event a check provided to Cascadia is returned as "NSF," Purchaser shall pay to Cascadia a fee of $300, plus interest at the rate of one and one-half percent (1-1/2%) per month until the outstanding amount is paid in full, and any lawyer or attorneys' fees and costs associated with Cascadia's collection of the amount owed. In the event of late or non-payment Cascadia reserves the right to stop work and collect product from Purchaser for which payment has not been made.

7. Warranties and Limitations. Cascadia warrants any products sold to purchaser as set forth in Cascadia's Limited Express Warranties & Limitations, a copy of which is attached hereto and expressly incorporated by reference as though fully set forth herein.

8. Defects in Insulating Glass Units. Defects in insulating glass units that may warrant replacement will be determined in accordance with CAN CGSB-12.3-M91 (flat, clear float glass) and CAN CGSB-12.8-97 (insulating glass units).

9. Limitation Of Damages. To the extent a legal claim is made against Cascadia Windows arising from or relating to any Order or products supplied, whether based on breach of contract or warranty, negligence, or any other basis, Cascadia Windows shall not be liable for any indirect, consequential or incidental damage or for any delay damages.

10. Indemnification. To the extent permitted by law, Purchaser agrees to indemnify, defend and hold Cascadia harmless from all claims for injury or death to persons or damages to property of any kind arising out of the use of Cascadia's products.

11. Disputes, Remedies and Limitations. The Order and these terms and conditions shall be governed and interpreted under the laws of the Province of British Columbia, Canada. Unless otherwise specifically provided herein, all claims of any nature, whether in contract or in tort, must be asserted within one (1) year from date of delivery of the products. All claims or disputes between the parties hereto are subject to either judicial resolution in a court of competent jurisdiction in the Province of British Columbia or shall be decided by a single arbitrator in accordance with the rules for commercial disputes of the Commercial Arbitration Act. Cascadia shall have the sole discretion as to whether the dispute will be handled through the courts or through arbitration and shall make its selection within thirty (30) days of written notice of a claim or dispute.

12. Legal or Attorneys' Fees and Costs. Purchaser agrees to pay Cascadia all lawyer or attorneys' fees and costs, including any related to post-judgment collection, should it become necessary for Cascadia to pursue collection of the amounts owed hereunder.

CASCADIA WINDOWS LTD.
TEL 604 857 4600
FAX 604 857 4606

27050 GLOUCESTER WAY
LANGLEY, BC CANADA V4W 3Y5

INFO@CASCADIAWINDOWS.COM
WWW.CASCADIAWINDOWS.COM

CASCADIA WINDOWS LTD.
LIMITED EXPRESS WARRANTIES & LIMITATIONS

Cascadia Windows Ltd. ("Cascadia"), with respect to the sale, supply, use and installation (when installed by Cascadia), of its fiberglass window and door products (the "products") and subject to the exclusions and limitations herein, provides to the original purchaser of the products the following limited express warranty (the "Warranty"):

FIBERGLASS FRAMES: Cascadia warrants, for a period of twenty (20) years, commencing from the date of delivery of the products to the original purchaser, that its fiberglass window and door frame components are free from defects in materials and workmanship. Fiberglass has material properties relative to strength, flexibility, durability, and thermal resistance that make it ideal for window and door frame applications. It is possible, however, for fiberglass to exhibit micro fissures at penetrations or concentrated stress locations. Cascadia's products are designed, manufactured, and tested with this potential in mind. Such minor fissures are a function of the material properties of fiberglass, do not compromise product performance, structural integrity, or durability, are not a product defect and therefore are not covered by this Warranty. Cascadia reserves the right to determine if stress induced micro fissures are material in nature. Cascadia's obligations under this section of this Warranty are limited to the repair or replacement of fiberglass frames, at its sole discretion.

HARDWARE: Cascadia warrants, for a period of ten (10) years, commencing from the date of delivery of the products to the original purchaser, that its operating hardware supplied integrally with the products is free from defects in materials and workmanship. Cascadia's obligations under this section of this Warranty are limited to the supply only of replacement hardware components, FOB Cascadia's plant. Labor costs to replace defective hardware components are not covered under this Warranty.

INSULATING GLASS UNITS - Annealed and Tempered Glass: The sealed insulating glass units (IGUs), consisting of annealed and/or tempered glass, which are contained in Cascadia products are manufactured by a third-party glazing supplier, and are installed by Cascadia within its fiberglass frames. The IGUs shall only be covered by the manufacturer's limited warranty for a period of 10 (ten) years, commencing from the date stamp found on the spacer bar between the sheets of glass. An optional warranty, up to 20 (twenty) years, may be provided to the purchaser to the extent that it is available from the manufacturer. The warranty of the IGUs is limited to the failure of the hermetic seal, and warrants only against the formation of water and/or dust on or within the interior surfaces of the IGUs. Cascadia shall provide no warranty of the IGUs separate and apart, or in addition to, the manufacturer's warranty. The remedy provided under this section of this warranty is limited to the supply only of replacement IGUs by Cascadia, FOB Cascadia's

plant, for defective IGUs. Labor costs to replace defective IGUs are not covered under this warranty.

INSULATING GLASS UNITS - Laminated Glass and Capillary Tubes: The sealed insulating glass units (IGUs) consisting of laminated glass, and /or those IGU's that have capillary tubes, and which are incorporate into Cascadia Products, are manufactured by a third-party glazing supplier, and are installed by Cascadia within its fiberglass frames. The IGUs shall only be covered by the manufacturer's limited warranty for a period of 5 (five) years, commencing from the date stamp found on the spacer bar between the sheets of glass. The warranty of the IGUs is limited to the failure of the hermetic seal, and warrants only against the formation of water and/or dust on or within the interior surfaces of the IGUs. Cascadia shall provide no warranty of the IGUs separate and apart, or in addition to, the manufacturer's warranty. The remedy provided under this section of this warranty is limited to the supply only of replacement IGUs by Cascadia, FOB Cascadia's plant, for defective IGUs. Labor costs to replace defective IGUs are not covered under this warranty.

EXCLUSIONS: This Warranty does not cover, and excludes without limitation, the following:

1. Damage caused by others arising from improper handling, accidents, abuse, or vandalism, or any other causes beyond Cascadia's control;
2. Glass breakage or screen tears occurring after delivery of the products;
3. Malfunction or reduced performance resulting from improper building design or product installation;
4. Damage or malfunction resulting from settlement of the building containing the products;
5. Discoloration occurring after delivery of the products to the original purchaser and arising from accumulations of dirt or other substances having the capacity to stain the painted surface or fiberglass products;
6. Damage resulting from wind, hail, fire, lightning, or other acts of God, or exposure to caustic chemicals or pollutants;
7. Defects or damage resulting from any modification of the product(s) without Cascadia's written approval;
8. Condensation on the surface of any product that may occur as the result of excess humidity or moisture; and
9. Micro fissures in the fiberglass frames at penetrations or concentrated stress locations.
10. Screens are covered under a separate warranty if provided by Cascadia.

Unless otherwise specifically provided herein, Cascadia's sole liability and Purchaser's exclusive remedy with respect to this Warranty shall be, in Cascadia's sole discretion, limited to either the repair or replacement of defective products covered by the Warranty.

This Warranty is null and void if Purchaser fails to properly maintain the products, or fails to comply with Cascadia's maintenance guide and maintenance requirements, or if the Purchaser fails to maintain complete and accurate maintenance records confirming compliance with stated

maintenance requirements. Cascadia's maintenance guide and maintenance requirements are found at http://www.cascadiawindows.com/maintenance-guide.php.

NO IMPLIED WARRANTIES: The foregoing limited express warranties are the only warranties applicable to products sold and/or supplied by Cascadia, and are provided to the exclusion of any other warranties. **ALL IMPLIED WARRANTIES, INCLUDING BUT NOT LIMITED TO THOSE RELATING TO MERCHANTABILITY, QUALITY, AND FITNESS FOR A PARTICULAR PURPOSE, ARE EXCLUDED EXCEPT TO THE EXTENT THEY ARE CONSISTENT WITH CASCADIA'S LIMITED EXPRESS WARRANTIES OR ARE OTHERWISE EXPRESSLY AGREED TO BY CASCADIA. ACCORDINGLY, THERE ARE NO WARRANTIES WHICH EXTEND BEYOND THE WARRANTIES DESCRIBED HEREIN.**

LIMITATION OF CLAIMS: Except as otherwise stated in Cascadia's Terms and Conditions, Cascadia's liability for any and all claims made against it arising from the sale, supply, use and installation (when installed by Cascadia), of its products shall cease if no action is commenced prior to the expiration of the warranty periods defined above. In no event shall Cascadia be liable to purchaser for any indirect, incidental, or consequential damages of any kind whatsoever.

Project Description: _____

Project Number: _____

Purchaser: _____

Warranty Issued by: _____

Date Warranty Issued: _____

CASCADIA WINDOWS & DOORS

CASCADIA WINDOWS LTD.

#101 - 5350B 275th Street,
Langley, BC, V4W 0C1

TEL 604 857 4600
FAX 604 857 4606

INFO@CASCADIAWINDOWS.COM
WWW.CASCADIAWINDOWS.COM

Window Maintenance Recommendations

Maintenance Task	Frequency (years)	Delay Start (years)	Access	Appropriate Service Provider
Clean vision glass from exterior. Soak the glass surface with clean water and a liquid soap solution to loosen dirt and debris. Use a mild, non-abrasive commercial window cleaning solution. Use a squeegee to remove all of the cleaning solution. Ensure all the cleaning solution is dried from window gaskets, sealants and frames.	1	0	Exterior	Window cleaning contractor
Clean vision glass from interior. Soak the glass surface with clean water and a liquid soap solution to loosen dirt and debris. Use a mild, non-abrasive commercial window cleaning solution. Use a squeegee to remove all of the cleaning solution. Ensure all the cleaning solution is dried from window gaskets, sealants and frames.	1	0	Interior	Resident
Clean, rinse, and dry all exterior frame surfaces and weepholes with clean water and a liquid soap solution to loosen dirt and debris. Use a mild, non-abrasive window cleaning solution. Do not use solvents or cleaners that can damage the paint finish.	2	0	Exterior	Window cleaning contractor
Clean, rinse, and dry all interior frame surfaces with clean water and a liquid soap solution to loosen dirt and debris. Use a mild, non-abrasive cleaning solution. Avoid using solvents or cleaners that can damage the paint finish.	1	0	Interior	Resident
Inspect exterior sealant at interface between cladding and window frame. Maintain as required.	2	5	Exterior	Sealant contractor
Inspect sealant cap bead between window frame and glass. Replace as required.	5	0	Exterior	Sealant contractor
Inspect operable vent hardware. • Repair any misaligned vents. • Adjust and lubricate operable vent hardware when required with 3 in 1 or other lightweight oil. • Tighten any loose handles and screws. Maintain hardware in good operable condition.	1	0	Interior of suites	Resident to inspect. Glazing contractor to repair/adjust if required.
Inspect operable vent gaskets. Repair or replace damaged gaskets as required.	2	2	Interior of suites	Glazing contractor
<u>Slider windows and doors only:</u> Inspect rollers and hardware. • Repair any misaligned operable units. • Adjust and lubricate operable hardware and rollers when required with 3 in 1 or other lightweight oil. • Tighten any loose handles and screws. Maintain hardware in good operable condition.	3	0	Interior of suites	Resident to inspect. Glazing contractor to repair/adjust if required.
Maintain accurate records of maintenance activities; list all products used for cleaning and lubricating.	1	0		Owner

CASCADIA WINDOWS LTD.
#101 - 5350B 275th Street,
Langley, BC, V4W 0C1
TEL 604 857 4600
FAX 604 857 4606
INFO@CASCADIAWINDOWS.COM
WWW.CASCADIAWINDOWS.COM

Window Installation Guideline Instructions / Checklist

1. Delivery

Windows are typically delivered to jobsites by Cascadia. Upon delivery of the windows, review of the windows should be performed while unloading the windows from the transport vehicle.

Ensure that the windows have not been damaged during the delivery process. Check for the following signs of damage. Customer is required to sign off to acknowledge receipt in good condition. Cascadia, at its discretion, will return, replace, or repair items noted as damaged.

- ☐ Broken or scratched glass
- ☐ Bent, broken or cracked flanges or frames
- ☐ Scratched frames

2. Handling & Storage

2a Means of Transporting - Determine method and means of transporting windows to the rough openings or storage area. The following provisions should be made:

- ☐ Transport mechanism capable of transporting windows to rough openings or storage locations without dropping or dragging the windows
- ☐ Accessible route to rough openings or storage locations without having to rotate windows from their upright position, unless setting blocks have been provided at one of the jambs and is shown on the window

2b Protecting Windows - Determine means of protecting windows from damage during storage period at rough openings or storage areas. Protection must be provided from the following:

- ☐ Rainwater and ground moisture
- ☐ Wind, tie frames to adequate support
- ☐ Concrete dust and other pollutants
- ☐ Damage by other trades
- ☐ Blocking must be provided to prevent damage to flanges if applicable
- ☐ Excessive heat
- ☐ Frame deflection caused by unsupported glass weight (see sketches below for proper storage methods)

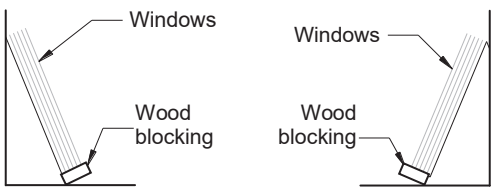

3. Installation Detail Compliance

3a Shop Drawings (if applicable)

The most current set of approved shop drawings or approved window schedule should be reviewed when transporting windows and doors to the rough openings to ensure that the correct windows are installed in the correct openings. Labels are placed on each window or door for reference.

Ensure conformance with the approved shop drawings. In particular, the following items should be verified. If they do not conform, Cascadia should be advised immediately:

- ☐ Hardware type and colour
- ☐ Frame Series
- ☐ Operable vent style and operation
- ☐ Sizes
- ☐ Frame colour
- ☐ Glass and panels (material type, thickness, low emissivity coatings, tempered, etc.)
- ☐ Accessories (installation clips, angles, insulation, sealants, fasteners, etc.)

3b Architectural Details & Cascadia Conceptual Installation Details

If project specific Shop Drawings are not included in the supply contract, an Architect and/or Building Envelope Consultant needs to be retained to design the installation details. Architectural details are to meet the general intent of Cascadia conceptual installation details, which are available online at www.cascadiawindows.com.

4. Rough Opening Review

Substrate and/or wall assemblies surrounding rough openings vary from project to project. The preparation work is often undertaken by trades other than the window installer. Review of the rough opening prior to installing the window to determine suitability is therefore required.

Ensure rough opening is suitable for specified window installation details. If deficiencies are observed with the rough openings, advise the General Contractor or Construction Manager immediately. The following items should be reviewed prior to the installation of the window opening components:

- ☐ Required clearance between window size and rough opening size
- ☐ Level sill and plumb jamb
- ☐ Moisture content of substrate
- ☐ Contaminants on substrate

5. Window Opening Preparation

Window installation includes work before and after the installation of the window unit itself. Proper sub sill drainage and detailing is critical to the overall performance of the window assembly.

Ensure all window opening component products are listed in the Project Specifications or have been accepted as an approved alternate by the governing consultant. The following is a list of possible window opening components required:

- ☐ Sealant for interior perimeters of window openings
- ☐ Sealant for interior finish joints
- ☐ Sealant for perimeter and lap joint vapour barrier seals (interior vapour barrier systems)
- ☐ Sealant for perimeter of exterior openings
- ☐ Sealant for self-adhesive membrane joints
- ☐ Sealant or tape for air-barrier continuity between sheathing paper layers (exterior air-barrier systems)

- ☐ Sealant primers
- ☐ Backer-rod and/or bondbreaker
- ☐ Sheathing paper
- ☐ Tape
- ☐ Membrane
- ☐ Membrane primers
- ☐ Metal flashing & trim
- ☐ Fasteners
- ☐ Retainer clip
- ☐ Installation angles

6. Installation of Window Assembly

Installation of the window unit into the prepared rough opening includes several items that are not typically described in detail in the applicable construction documents, and may not be included in the shop drawings or manufacturer's instructions.

6a **Installation details -** Ensure that window installation materials are installed in accordance with applicable construction details, shop drawing details (if applicable) and Window Installation Guideline instructions/ checklist. Identify any conflicts between these documents. The following is a list of key interface conditions that should be reviewed:

- ☐ Material compatibility
- ☐ Shingling of layers
- ☐ Continuity of sealants
- ☐ Preparation of surfaces
- ☐ Lap lengths

6b **Continuity of critical barrier systems -** Ensure that material interfaces within installed window assembly are capable of successfully achieving continuity of the critical barriers listed below. Mock-ups should be undertaken of typical conditions to confirm details and continuity; mock-ups should be reviewed by consultant and approved. If lack of continuity appears to be an issue with any of these barrier systems, advise the applicable consultant immediately:

- ☐ Water Shedding Surface
- ☐ Weather Resistive Barrier
- ☐ Air Barrier
- ☐ Vapour Barrier
- ☐ Thermal Barrier
- ☐ Fire Separation (when specified)

6c **Placement of shims -** Ensure shims are placed intermittently beneath the window frames at all points where the glass loads are being directed. Additional shims should be placed to provide a level surface for frame. Shims should be placed as follows:

- ☐ Below all setting blocks supporting lower lites
- ☐ Below mullions
- ☐ Below coupling bars (if applicable)

- ☐ Intermittently between large setting block spans (typically 8” o/c)
- ☐ Per project shop drawings (when applicable), some frame types require more frequent shim spacing

****Note that shims for all swing doors and sliding doors need to extend all the way out to the exterior edge of the threshold and slider track.**

6d **Proper alignment of frame -** Ensure window is installed plumb, level and square. Windows installed out of level may promote ponding of moisture at the glazing pocket corners and may impede the smooth operation of the operable vents. The following should be reviewed to ensure proper alignment of frame:

- ☐ Uniform margin between operable vent and frame when slightly open
- ☐ Uniform reveal at sash to frame when operable vent is shut
- ☐ Diagonal measurements from one corner of frame to other corner of frame
- ☐ Operation of vent not restricted by flashing
- ☐ Alignment of frame consistent with those in adjacent openings

6e **Fastening details -** Ensure window is fastened to structure in accordance with the most current approved set of shop drawings, or by the design professional responsible for the installation detailing (whichever is applicable for the project). The following fastening details should be confirmed:

- ☐ Type of fasteners
- ☐ Level of corrosion resistance
- ☐ Composition of fasteners
- ☐ Length of fasteners
- ☐ Shank diameter of fasteners
- ☐ Thread spacing of fasteners
- ☐ Head diameter
- ☐ Spacing of fastener anchor points
- ☐ Composition of structural angles and clips
- ☐ Gauge of structural angles and clips
- ☐ Minimum edge distances for anchor points on substrate

Cascadia Windows Site Handling Requirements

DELIVERY: AT THE TRUCK

Upon delivery, review and inspect the windows and / or doors shipped by Cascadia (the product) while unloading from the transport vehicle.

Ensure that the products have not been damaged during the delivery process. Check for transport damage. If customer does not notify Cascadia of damage at time of delivery, then all products are considered to be received in good condition. Cascadia, at its discretion, will return, replace, or repair items noted as damaged. Defects and/or deficiencies of any type, in any product supplied by Cascadia, must be reported to Cascadia prior to installation.

HANDLING: MOVING TO STORAGE and MOVING TO INSTALL LOCATION

Determine method and means of transporting the products to the rough openings or storage area. The following provisions must be made:

- Use transport equipment capable of transporting products to rough openings or storage locations without dropping or dragging.
- Use an accessible route to rough openings or storage location without having to flip products from their upright position, unless setting blocks have been provided at one of the jambs and is shown on the product.
- Keep products in a vertical position with sill of frame fully supported.
- Never rotate the products on unsupported edges or corners. This can result in overloading of fiberglass components and associated damage.
- Do not twist or rack the products.

PROTECTION AND STORAGE: PRIOR TO INSTALLATION

Protect the stored products from:

- Abrasion. Separate frames from each other with non-abrasive pad material.
- Rainwater and ground moisture.
- Wind. Tie the frames to strong support.
- Concrete dust and other pollutants.
- Excessive heat.
- Damage by other trades.
- Frame deflection caused by unsupported glass weight.

Never rest the products on fiberglass frame edges without proper blocking beneath. Store with solid support at 90° to the frame. Ensure all fiberglass downturned legs are fully supported by wood blocking. Follow diagrams below.

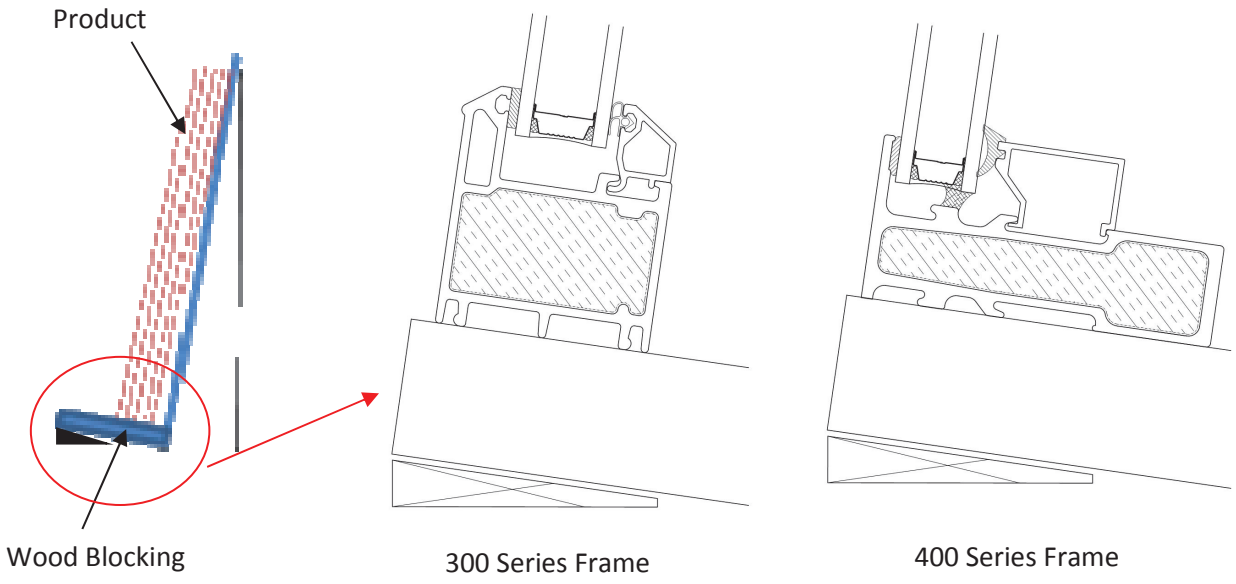

SUBMITTALS IDENTIFICATION SHEET

PROJECT: Wastewater Treatment Plant Upgrade
Iqaluit, Nunavut

NUNAMI
STANTEC LIMITED
1088C Noble House
Iqaluit NU
www.stantec.com

CONTRACTOR: Kudlik Construction Ltd, Project 2018-062

Telephone: 867-979-1166

E-mail: srousseau@kudlik.biz

SUBCONTRACTOR:

Person responsible:

Telephone: () E-mail:

PRODUCT SUBMITTED:

☑ As Specified

☐ Alternate

SUPPLIER or MANUFACTURER: Givesco

175 st-sacrement Quebec, qc G1N 3X4

Person responsible: Eric Godbout

Telephone: egodbout@givesco.com

DESCRIPTION OF SUBMITTAL: membrane

# of pages:

Reference to drawings:

Reference to specs:

Division: 07 Section: 07 27 10

REMARKS:

REVIEW AND COMMENTS (for use by Consultants):

STANTEC PROJECT #: 110126045

SUBMITTAL # SU-005 rev 1

This review by Stantec is for general conformance with the design concept of Stantec's design of the:

☑ Architectural ☐ Electrical
☐ Structural ☐ Other
☐ Mechanical

component(s) only and does not mean that Stantec has verified or approves the shop drawing(s). The Contractor remains solely responsible for the shop drawing(s) and this review by Stantec does not relieve the Contractor of the Contractor's responsibility for errors or omissions in the shop drawing(s) or for meeting all requirements of the contract documents. This review does not mean that Stantec approves the detailed design inherent in the shop drawing, responsibility for which shall remain with the Contractor submitting same, nor does this review mean that Stantec accepts any deviation of the shop drawing(s) from the contract documents. The Contractor is responsible for confirming all dimensions and correlating them at the job site, for all construction means, methods and techniques, and for coordination of construction work of all trades, including coordination of all shop drawings.

Stantec

☑ REVIEWED

☐ REVIEWED, AS NOTED

☐ REVISE AND RESUBMIT

☐ NOT REVIEWED

DATE 2018-06-15

BY Jason King

Review of this submission is for compliance with general intent of the contract. This review does not relieve the Sub-Contractor, Supplier or Manufacturer of responsibility for error or omissions in the submission or the responsibility of meeting all requirements of the contract documents. Any deviation from the contract documents initiated by the Sub-Contractor, Supplier or Manufacturer shall be at their sole risk. QUANTITIES AND DETAIL DIMENSIONS ARE THE SUB-CONTRACTORS OR SUPPLIERS RESPONSIBILITY. VERIFY DATA WITH FIELD DIMENSIONS.

SUBMITTAL TRACKING No.: **SU-005 rev 1**

2018-06-15

TECHNICAL DATA SHEET

Blueskin® Roof High Temperature Underlayment - PE 200 HT

Physical Properties

-Colour	Blue	-Flow @ 110°C (ASTM D1970)	None
-Thickness	1.0 mm (40 mils)		
-Application Temperature	5°C and above	-Adhesion to Plywood (ASTM D903)	850 N/m
-Elongation (ASTM D412 Die C Modified)	250% min. (To ultimate failure of rubberized asphalt)	-Flexibility at -43°C (ASTM D1970)	Pass
-Tensile Strength Membrane (ASTM D412)	4128 kN/m^2 min.) (600 psi min.)	-Air Leakage @ 75 PA (ASTM E2178)	<0.004 cfm/ft^2
		-Water Vapour Transmission (ASTM E96)	2.8 ng/Pa.s.m^2 (0.05 perms)

Packaging

-Thickness	1.0 mm (40 mils)	-Gross Coverage	18.1 m^2 (195 ft^2)
-Roll Length	19.81 m (65')	-Net Coverage	16.7 m2 (179.4 ft2)
-Roll Width	914 mm (36")		
-Top Surface	Blue-Cross Laminated Polyethylene (hot melt coated)	*Based on 70 mm laps both side and end.	
-Bottom Surface	Siliconized Kraft Paper		

Description

Blueskin® Roof High Temperature Underlayment (PE 200 HT) is a self-adhered composite membrane consisting of a high softening point, SBS rubberized asphalt compound which is integrally laminated to a blue, density cross-laminated polyethylene film with anti-slip coating. **Blueskin® Roof High Temperature Underlayment (PE 200 HT)** is specifically designed to be self-adhered providing an exceptionally high performance roof underlayment.

Features

- SBS compound with high softening point
- Self-sealing when punctured by mechanical fasteners
- Fully adhered systems prevents lateral moisture migration
- Premium anti-skid surface for applicator safety
- Tough, "heel puncture" resistant film
- Non-granular surface eliminates concern for damage to architectural metal finish during application

Uses

Blueskin® Roof High Temperature Underlayment (PE 200 HT) is used as a self-adhered membrane designed to be adhered directly to roof decks or certain insulation panels prior to the application of finished roof coverings including architectural metal, shingles or tile. Its main function is to serve as a full coverage-waterproofing layer in the composition of architectural metal roof decks.

Henry Company Canada, 15 Wallsend Drive, Scarborough, ON M1E 3X6
Tel: 800-486-1278 **Email:** techservices@henry.com

www.bakor.com

REV: 01/16/14

Limitations

Not resistant to oils and solvents. New dimensional lumber decks may contain knots with resin levels that can attack and severely soften the **Blueskin® Roof High Temperature Underlayment (PE 200 HT)** bitumen compound. Henry will not be responsible for these areas.

Not resistant to oils and solvents. Not designed for permanent exposure. **Blueskin® Roof High Temperature Underlayment (PE 200 HT)** is designed to withstand exposure up to 90 days, however, good practice calls for the membrane to be covered as quickly as possible. **Blueskin® Roof High Temperature Underlayment (PE 200 HT)** is a vapour barrier. Provide adequate insulation and ventilation in cold climate areas. Thin films of dust, water, frost or ice will affect the skid resistance of this product.

Storage

Store rolls on original pallets or elevated platform. Protect from weather or store in an enclosed area not subject to heat over 40°C or under -10°C. Double stacked pallets are not recommended. If double stacking is necessary, use a plywood sheet to distribute the load.

Preparation

Blueskin® Roof High Temperature Underlayment (PE 200 HT) is designed to be adhered directly to the structural deck or to certain insulation panels such as polyisocyanurate. Acceptable substrates include metal decks, plywood, wood plank, wood composition, concrete, gypsum board sheathing, glass faced gypsum sheathing and masonry.

All substrates are to be free of dust, oil, dirt, debris and moisture. All protrusions must be removed to provide a smooth surface. On re-roofing applications, remove old shingles, nails and other loose materials.

Priming is required only on DensDeck®, oriented strand board (OSB), concrete or masonry substrates. Prime with **Aquatac™, Blueskin® Adhesive** or **Hi Tac™ Adhesive** applied as per application and handling guidelines outlined in specific data sheets. Primed surfaces not covered by membrane during the same working day must be reprimed.

Application

Ambient and surface temperature should be above 5°C to achieve optimum adhesion. Lower temperatures cause self-adhesive layer to lose adhesive quality.

Metal Deck Applications: Apply **Blueskin® Roof High Temperature Underlayment (PE 200 HT)** beginning at low point of deck and proceed in shingle fashion. Overlap at ends and sides a minimum of 65mm (2 1/2"). Run membrane parallel to the flutes of the deck with side laps positioned on the top or "crest" flute for optimum adhesion. Fasten a strip of metal over
flutes to provide support for end laps. Alternately, seal end laps with **POLYBITUME® 570-05 Polymer Modified Sealing Compound or HE925 BES Sealant.**

Applications over Insulation: Apply **Blueskin® Roof High Temperature Underlayment (PE 200 HT)** in direction of slope or perpendicular to slope. When applied perpendicular to slope apply membrane beginning at low point of and proceed in shingle fashion. Overlap at ends and sides a minimum of 65mm (2 1/2") for all applications.

Roof Edge Applications: Roll out and align manageable lengths of **Blueskin® Roof High Temperature Underlayment (PE 200 HT)** with the lower roof edge, pebbled film surfaced up. Slowly peel release paper away from membrane in 600mm (2') to 900mm (3') lengths. Press firmly in place while proceeding along roof edge. Overlap at ends and sides a minimum of 65mm (2 1/2"). When **Blueskin® Roof High Temperature Underlayment (PE 200 HT)** is folded over the roof edge, it must be covered by flashing, gutter or metal edge.

Apply **Blueskin® Roof High Temperature Underlayment (PE 200 HT)** far enough up the roof deck to meet local codes and to prevent leaks caused by ice dams.

Ridge & Valley Applications: Roll out and align manageable lengths of **Blueskin® Roof High Temperature Underlayment (PE 200 HT)**, pebbled film surface up. Slowly peel release paper or film away from **Blueskin® Roof High Temperature Underlayment (PE 200 HT)** in 600mm (2') to 900mm (3') lengths. Press firmly in place beginning at centre of ridge or valley. Overlap at ends and sides a minimum of 65mm (2 1/2"). Apply in shingle fashion on valleys.

Protection of Membrane

See limitations. Not designed for permanent exposure. Apply finish-covering materials as soon as possible following membrane application. If final roof covering does not promptly follow membrane application, secure **Blueskin® Roof High Temperature Underlayment (PE 200 HT)** in place with mechanical fasteners as a precaution against wind damage and uplift. Protect membrane from excessive traffic during application.

Statement of Responsibility

The technical and application information herein is based on the present state of our best scientific and practical knowledge. As the information herein is of a general nature, no assumption can be made as to a product's suitability for a particular use or application and no warranty as to its accuracy, reliability or completeness either expressed or implied is given other than those required by law. The user is responsible for checking the suitability of products for their intended use. Henry Company data sheets are updated on a regular basis; it is the user's responsibility to obtain and to confirm the most recent version. Information contained in this data sheet may change without notice.

SUBMITTALS IDENTIFICATION SHEET

PROJECT: Wastewater Treatment Plant Upgrade
Iqaluit, Nunavut

NUNAMI
STANTEC LIMITED

1088C Noble House
Iqaluit NU
www.stantec.com

CONTRACTOR: Kudlik Construction Ltd, Project 2018-062

Telephone: 867-979-1166

E-mail: srousseau@kudlik.biz

SUBCONTRACTOR:

Person responsible:

Telephone: () E-mail:

PRODUCT SUBMITTED:

☑ As Specified

☐ Alternate

SUPPLIER or MANUFACTURER: Soprema

Person responsible: Jean-Francois Tremblay

Telephone: 418-928-3696 E-mail: jftremblay@soprema.ca

DESCRIPTION OF SUBMITTAL: membrane

# of pages:

Reference to drawings:

Reference to specs:

Division: 07 Section: 07 27 10

REMARKS:

REVIEW AND COMMENTS (for use by Consultants):

STANTEC PROJECT #: 110126045

SUBMITTAL # SU-006R1

This review by Stantec is for general conformance with the design concept of Stantec's design of the:

☑ Architectural ☐ Electrical
☐ Structural ☐ Other
☐ Mechanical

component(s) only and does not mean that Stantec has verified or approves the shop drawing(s). The Contractor remains solely responsible for the shop drawing(s) and this review by Stantec does not relieve the Contractor of the Contractor's responsibility for errors or omissions in the shop drawing(s) or for meeting all requirements of the contract documents. This review does not mean that Stantec approves the detailed design inherent in the shop drawing, responsibility for which shall remain with the Contractor submitting same, nor does this review mean that Stantec accepts any deviation of the shop drawing(s) from the contract documents. The Contractor is responsible for confirming all dimensions and correlating them at the job site, for all construction means, methods and techniques, and for coordination of construction work of all trades, including coordination of all shop drawings.

Stantec

☑ REVIEWED

☐ REVIEWED, AS NOTED

☐ REVISE AND RESUBMIT

☐ NOT REVIEWED

DATE 2018-06-15

BY Jason King

Review of this submission is for compliance with general intent of the contract. This review does not relieve the Sub-Contractor, Supplier or Manufacturer of responsibility for error or omissions in the submission or the responsibility of meeting all requirements of the contract documents. Any deviation from the contract documents initiated by the Sub-Contractor, Supplier or Manufacturer shall be at their sole risk. QUANTITIES AND DETAIL DIMENSIONS ARE THE SUB-CONTRACTORS OR SUPPLIERS RESPONSIBILITY. VERIFY DATA WITH FIELD DIMENSIONS.

SUBMITTAL TRACKING No.: **SU-006 rev1**

2018-06-15

SOPRASEAL
STICK 1100 T

WATERPROOFING

APPLICATIONS

WALLS

TECHNICAL DATA SHEET 180418SCANE (supersedes 180126SCANE)

DESCRIPTION

SOPRASEAL STICK 1100 T is a self-adhesive membrane composed of SBS modified bitumen and a tri-laminated woven polyethylene facer. The tri-laminated woven polyethylene is compatible for the use of sprayed polyurethane foam insulation. The underface is covered with a silicone release paper or film.

SOPRASEAL STICK 1100 T is designed for air/vapour barrier waterproofing applications. It is also used as masonry and through wall flashing membrane as well as waterproofing membrane at openings and transitions. SOPRASEAL STICK 1100 T can also be use in conjunction with SOPRASEAL WFM as a wall flashing membrane.

RECOMMENDED SUBSTRATES

This product can be used on most substrates, such as masonry, concrete, wood and gypsum.

SURFACE PREPARATION

The use of SOPRASEAL STICK PRIMER, ELASTOCOL STICK ZERO or ELASTOCOL STICK H_2O, is required before the installation of SOPRASEAL STICK 1100 T membrane. The substrate should be clean, sound, free of excess water and loose materials, grease and any contaminants, which may compromise the performance of the product.

INSTALLATION

SELF-ADHESIVE

1- Begin by installing SOPRASEAL STICK 1100 T membrane on angle changes, details and penetrations by removing the silicone release paper or film from the self-adhesive underside.

2- Proceed with the overall installation of the SOPRASEAL STICK 1100 T by ensuring that all membrane overlaps has a minimum of 50 mm (2 in).

3- Once installed, a pressure must be applied over the whole surface using a hard roller to ensure a perfect adhesion.

4- Use SOPRASEAL SEALANT with SOPRASEAL STICK 1100 T membrane to seal around details, reverse laps and critical areas.

Application temperatures: Winter grade: -10 to 10°C (14 to 50°F)
Summer grade: 10 to 50°C (50 to 122°F)

Service temperatures: Winter grade: -45 to 90°C (-49 to 194°F)
Summer grade: -45 to 90°C (-49 to 194°F)

UV exposure: up to 90 days

FOR COMPLETE INFORMATION ON PRODUCT INSTALLATION, PLEASE CONSULT YOUR SOPREMA REPRESENTATIVE.

TDS_SOPRASEAL_STICK_1100T.indd

SYSTÈME QUALITÉ ISO 9001 QUALITY SYSTEM

SYSTÈME ENVIRONNEMENT ISO 14001 ENVIRONMENT SYSTEM

SOPREMA®

NOTE : SOPREMA INC. may modify the composition and/or utilization of its products without prior notice.

SOPRASEAL
STICK 1100 T

TECHNICAL DATA SHEET 180418SCANE (supersedes 180126SCANE)

WATERPROOFING

APPLICATIONS

WALLS

PACKAGING

Specifications	SOPRASEAL STICK 1100 T (complete roll)	SOPRASEAL STICK 1100 T (pre-cut roll)
Thickness	1.0 mm (40 mil)	
Dimensions	0,91 x 22, 9 m (3 x 75 ft)	100 mm x 22,9 m (4 in x 75 ft) 150 mm x 22,9 m (6 in x 75 ft) 225 mm x 22,9 m (9 in x 75 ft) 300 mm x 22,9 m (12 in x 75 ft) 450 mm x 22,9 m (18 in x 75 ft)
Weight	1.0 kg/m^2 (0.2 lb/ft^2)	
Selvedge width	50 mm (2 in)	-
Surface	Tri-laminated woven polyethylene	
Underface	Silicone release paper	Silicone release film
Qty/pal	36	Varies depending of the width

(All values are nominal)

SYSTÈME QUALITÉ ISO 9001 QUALITY SYSTEM
SYSTÈME ENVIRONNEMENT ISO 14001 ENVIRONMENT SYSTEM

NOTE : SOPREMA INC. may modify the composition and/or utilization of its products without prior notice.

SOPRASEAL
STICK 1100 T

WATERPROOFING

APPLICATIONS

WALLS

TECHNICAL DATA SHEET 180418SCANE (supersedes 180126SCANE)

PROPERTIES

Properties	Sandards	SOPRASEAL STICK 1100 T
Tensile strength, MD/XD	ASTM D5147	13.1 / 9.6 kN/m (74 / 55 lb/in)
Ultimate elongation, MD/XD	ASTM D5147	40 / 25 %
Ultimate elongation (bitumen)	ASTM D5147	> 1000 %
Flexibility at cold temperature	ASTM D5147	-35°C (-31°F)
Flow at 110 °C	ASTM D5147	Pass
Static puncture	ASTM E154	575 N (129 lbf)
Tear resistance, MD/XD	ASTM D5147	535 / 245 N (120 / 55 lbf)
Lap adhesion	ASTM D1876	2100 N/m (12 lbf/in)
Peel resistance on primed gypsum	ASTM D903	1180 N/m (7 lbf/in)
Water vapour transmission	ASTM E96 (Procédure B)	< 2.1 ng/Pa•s•m² (< 0.037 perm)
Air permeability, 75 Pa	ASTM E2178	< 0.0005 L/s•m² (< 0.00001 cfm/pi²)
Air leakage resistance	ASTM E2357	< 0.002 L/s•m²
Air permeance of membrane	CAN/ULC S741	< 0.001 L/s•m²
Air leakage rate classification	CAN/ULC S742	A1
Resistance to wind gusts	ASTM E330 (3000 Pa-10s)	No delamination, no variation of air permeability
Resistance to uniform static air pressure	ASTM E330 (100 Pa-1h)	No significant delamination, no variation of air permeability
Fire resistance	Component of an assembly tested in conformity with NFPA 285	Pass
Nail sealability	ASTM D1970 modified	Pass

(Valeurs nominales)

STORAGE AND HANDLING

Rolls must be stored upright, with the selvedge side on top. If the product is stored outdoors, cover them with an opaque protective cover after removal of the delivery packaging.

NOTE : SOPREMA INC. may modify the composition and/or utilization of its products without prior notice.

SUBMITTALS IDENTIFICATION SHEET

PROJECT: Wastewater Treatment Plant Upgrade
Iqaluit, Nunavut

CONTRACTOR: Kudlik Construction Ltd, Project 2018-062

Telephone: 867-979-1166

E-mail: srousseau@kudlik.biz

SUBCONTRACTOR:

Person responsible:

Telephone: () E-mail:

PRODUCT SUBMITTED:

☑ As Specified

☐ Alternate

SUPPLIER or MANUFACTURER: Beaver Plastic ltd

Person responsible: Scott McFadyen

Telephone: (888) 453-5961 E-mail: scott.mcfadyen@beaverplastics.com

DESCRIPTION OF SUBMITTAL: insulation foundation

# of pages:

Reference to drawings:

Reference to specs:

Division: 07 Section: 07 21 13

REMARKS:

REVIEW AND COMMENTS (for use by Consultants):

STANTEC PROJECT #: 110126045 SUBMITTAL # SU-007

This review by Stantec is for general conformance with the design concept of Stantec's design of the:

☐ Architectural ☐ Electrical
☐ Structural ☐ Other
☐ Mechanical

component(s) only and does not mean that Stantec has verified or approves the shop drawing(s). The Contractor remains solely responsible for the shop drawing(s) and this review by Stantec does not relieve the Contractor of the Contractor's responsibility for errors or omissions in the shop drawing(s) or for meeting all requirements of the contract documents. This review does not mean that Stantec approves the detailed design inherent in the shop drawing, responsibility for which shall remain with the Contractor submitting same, nor does this review mean that Stantec accepts any deviation of the shop drawing(s) from the contract documents. The Contractor is responsible for confirming all dimensions and correlating them at the job site, for all construction means, methods and techniques, and for coordination of construction work of all trades, including coordination of all shop drawings.

Stantec

☑ REVIEWED

☐ REVIEWED, AS NOTED

☐ REVISE AND RESUBMIT

☐ NOT REVIEWED

DATE 2018-06-12

BY Jason King

Review of this submission is for compliance with general intent of the contract. This review does not relieve the Sub-Contractor, Supplier or Manufacturer of responsibility for error or omissions in the submission or the responsibility of meeting all requirements of the contract documents. Any deviation from the contract documents initiated by the Sub-Contractor, Supplier or Manufacturer shall be at their sole risk. QUANTITIES AND DETAIL DIMENSIONS ARE THE SUB-CONTRACTORS OR SUPPLIERS RESPONSIBILITY. VERIFY DATA WITH FIELD DIMENSIONS.

SUBMITTAL TRACKING No.: SU-007

2018-06-09

DYNAVOID™

United States Patent: #6,289,636
Canadian Patent: #2,282,109

DYNAMIC INCLUSION FOR STRUCTURAL CONCRETE SLABS

DYNAVOID is designed to be used under structural concrete slabs to prevent heaving caused by the upward movement of underlying ground. It is manufactured from inert closed-cell expanded polystyrene, and is not affected by moisture.

BACKGROUND

A protective void may be required under structural slabs and pile caps to prevent damage from the forces of swelling soils. Various materials can be used to create this protective void, provided they can support the weight of the concrete. However, the selected material must then relax so as to absorb destructive forces from freezing and/or expanding soils.

EPS products can be manufactured with reduced density or cross-sectional area to reduce compressive strength. However, it is difficult to produce a design strong enough to carry concrete-placing loads, yet absorb a significant degree of sub-grade swell. A mechanism is required that will accommodate the anticipated movement of underlying soils. Without such a mechanism, stress that will be transmitted to the bottom of a slab at substantial strain will generally be beyond the slab's structural limit.



PRODUCT DESCRIPTION

DYNAVOID™ was developed to meet the requirements for a moisture tolerant void material for under structural concrete. It is a Dynamic Inclusion, mechanically responsive to expanding soils.

DYNAVOID is designed to bear the weight of a slab until it is self-supporting. Long-term sustained stress then causes DYNAVOID to collapse due to thermoplastic creep. As soils expand, the geometry of DYNAVOID converts this vertical strain into a horizontal deflection of supporting legs. Deflection continues until 'over-center' mechanical failure, with the collapsed leg segments nested together. A limited amount of simple compression will then occur as with ordinary foam materials.

DYNAVOID is produced in different performance ranges and in thickness' of 100 and 150 mm (4" or 6"), in 1220 by 1220-mm (4' x 4') panels.

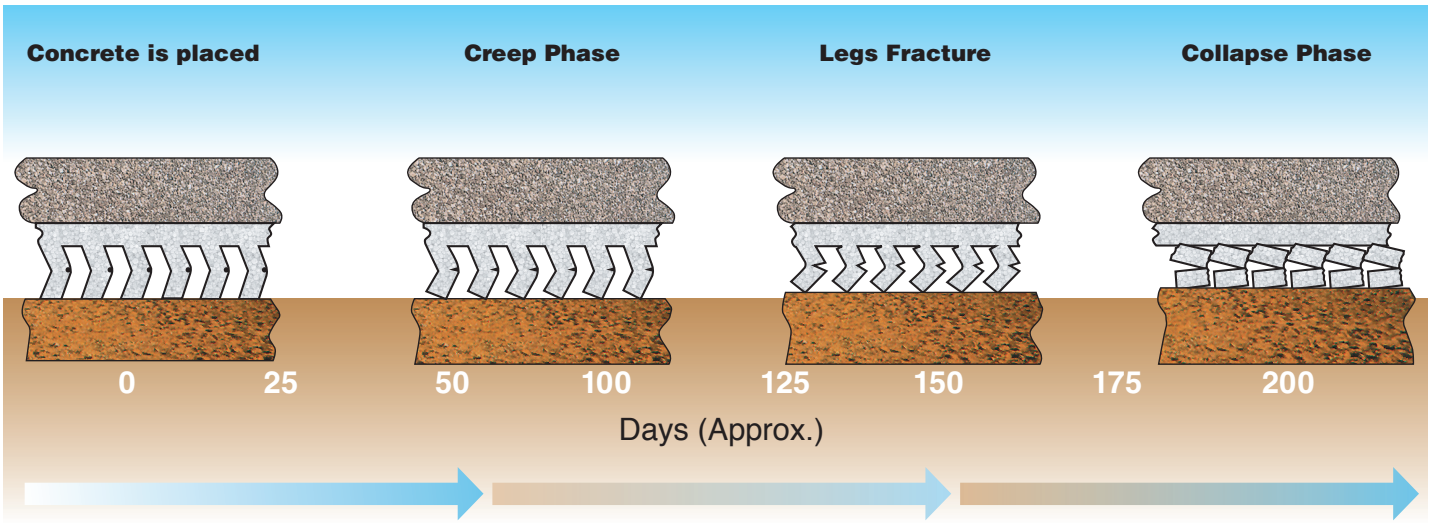

INSTALLATION INSTRUCTIONS

DYNAVOID panels are laid on prepared, level ground, with joints tight. The panels are easily cut to fit around protuberances, column bases, etc. Overlay materials (hardboard, fiberboard, OSB) are strongly recommended to distribute point loads, rebar chars, etc.

DYNAVOID SELECTION CHART

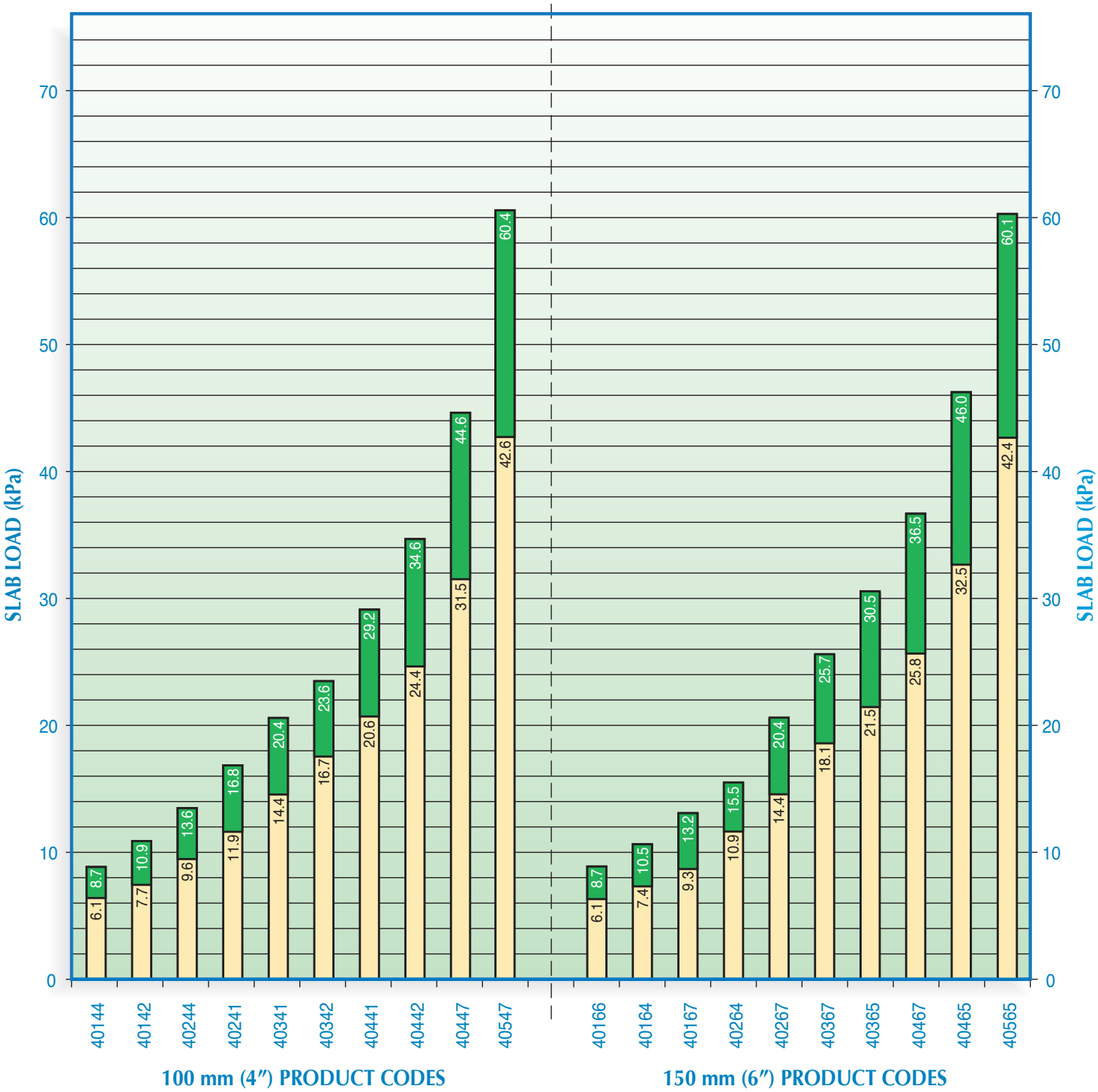

DYNAVOID is available in both 100 mm (4") and 150 mm (6") thicknesses in order to meet the protective void requirements for virtually all structural slabs. The green portion of each column indicates the recommended performance range for each DYNAVOID type that will safely support a structural slab, while permitting void form creep and collapse to occur as a result of sustained sub-grade swell. Product selection is based on simple slab weight, producing a pressure of 23.6 kPa per metre thickness. EG: a 750 mm slab will produce .75 X 23.6 = 17.7 kPa pressure. For slab thickness measured in inches, multiply inches by 0.6 to obtain slab load in kPa.

Note: The performance range for each type can be adjusted by adding downward restraint provided by foundations and/or superstructure. Contact Beaver's technical service for information.

Beaver Plastics

7-26318-TWP RD 531A
Acheson, Alberta, Canada T7X 5A3
Phone (780) 962-4433
Fax: (780) 962-4640
Toll Free: (888) 453-5961
www.beaverplastics.com

2 layers

SIZES/PACKAGING

PRODUCT SIZE	PCS/BUNDLE	AREA/BDLE	BUNDLE SIZE
4" X 4' X 4'	10	160 SQ. FT.	24" X 4' X 4'
100x1220x1220 mm	10	14.8 SQ. M.	610x1220x1220 mm
6" X 4' X 4'	6	96 SQ. FT.	24" X 4' X 4'
150x1220x1220 mm	6	8.9 SQ. M.	610x1220x1220 mm

™ *REGISTERED TRADEMARK OF BEAVER PLASTICS LTD.*

REV: 14.10.16 *Printed in Canada*

07 21 13 item 2.1.3.3.1

Beaver Plastics

FROST CUSHION®

Grade Beam Void Form System

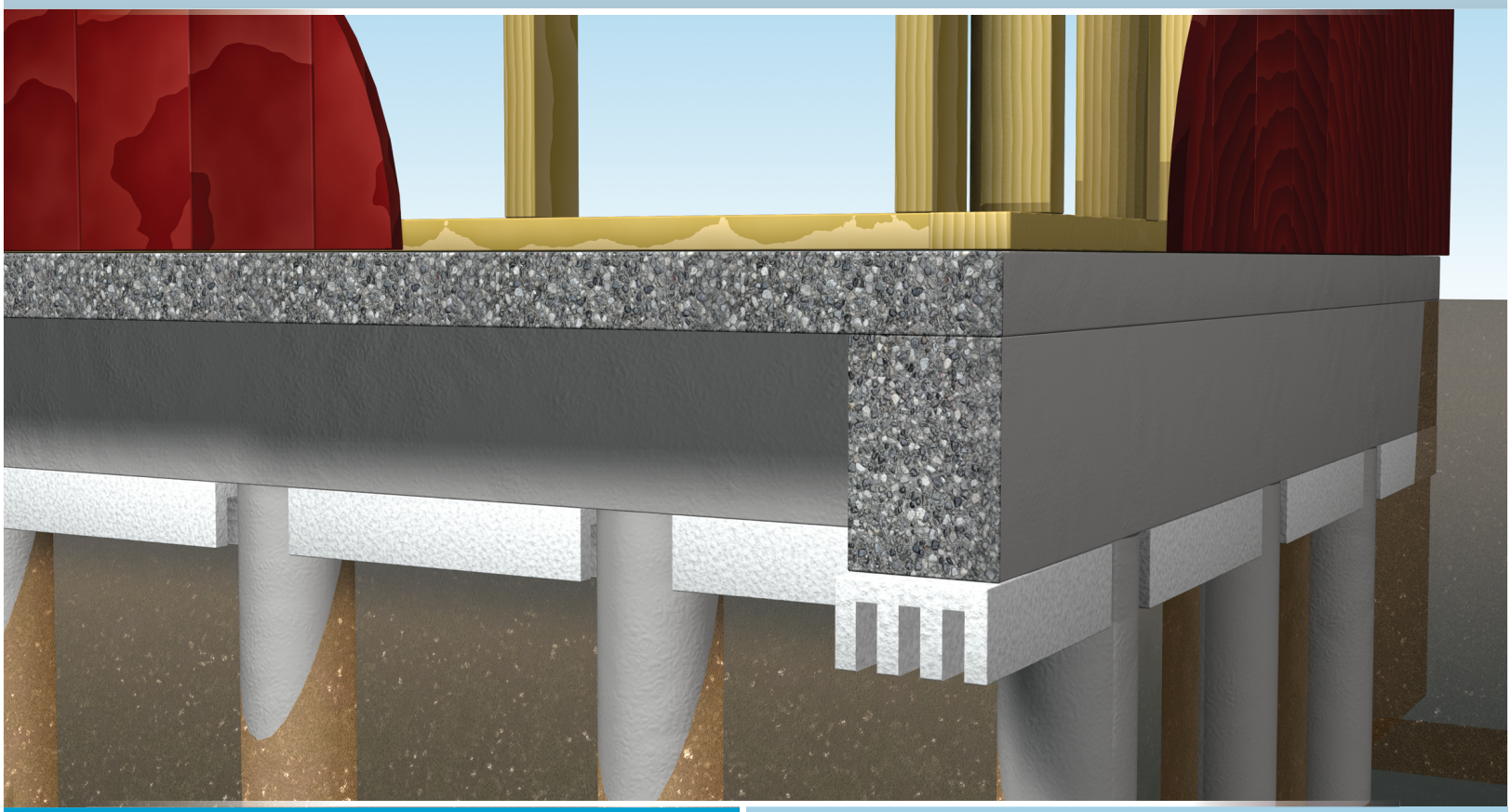

PRODUCT DESCRIPTION

FROST CUSHION is a 'closed cell' EPS '**Protective Void Form**' specifically designed to protect concrete grade beams. Frost and moisture-induced swelling of underlying soils may lift and/or fracture concrete structures resulting in unwanted and costly repairs. Due to its closed cell structure it has excellent resistance to freeze/thaw, will not collapse due to water absorption and resists soil movement into spaces below the concrete.

PRODUCT PERFORMANCE

Frost Cushion will support an initial load of up to 1 meter (39") of fresh concrete. **Frost Cushion's** unique geometry of alternating and slightly curved legs react to subgrade uplift by deforming and collapsing at a much lower stress than 'solid void form' products. At 50% compression, **Frost Cushions uplift force is less than 50 kpa**.

CHART 1: COMPARING FROST CUSHION TO SOLID VOID FORM UPLIFT FORCES

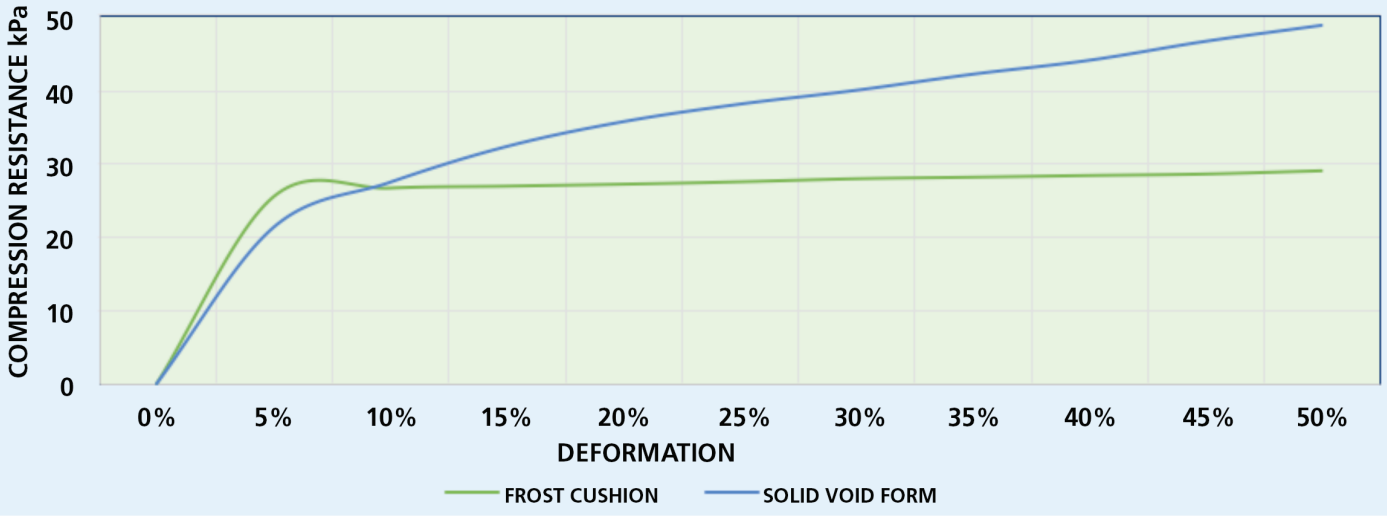

CHART 2: FROST CUSHION COMPRESSIVE STRESS/STRAIN TEST (ASTM D-1621)

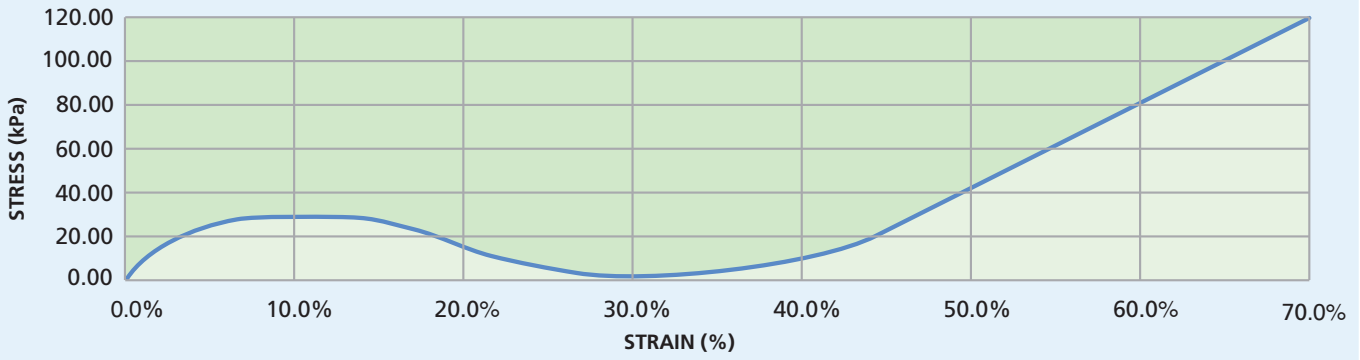

CONTROLLING THE DESTRUCTIVE FORCES OF FROST AND SOIL SWELL

Chart 1 compares the uplift forces of Frost Cushion to standard 'solid' void form as the products are being compressed by soil swell. At 50% compression, Frost Cushion's uplift force is less than 30 kPa, approximately ½ that of solid void uplift pressures, thus protecting structures from damage due to frost and soil swell.

HEALTH, SAFETY AND OUR ENVIRONMENT

Frost Cushion is one of the few foam plastic materials available that contain absolutely no CFCs, HCFCs, or other complex chemical gases. It does not contribute to climate change or atmospheric ozone depletion.

STANDARD SIZES AVAILABLE

THICKNESS	NOMINAL WIDTHS*	LENGTHS
100 mm (4")	200 mm (8")	2440 mm (8')
2 layers	250 mm (10")	
	300 mm (12")	
	1220 mm (48")	
150 mm (6")	200 mm (8")	2440 mm (8')
	250 mm (10")	
	300 mm (12")	
	1220 mm (48")	

* Unless otherwise specified at time of purchase, FROST CUSHION is supplied 5 mm (1/4") narrower than stated width, in order to facilitate placement inside standard formwork.

Beaver Plastics

11581-272 Street
Acheson, Alberta, Canada T7X 6E9
Phone: **780 962-4433**
Fax: **780 962 4640**
Toll Free: **888 453 5951**

Distributed by:

™ REGISTERED TRADEMARK OF BEAVER PLASTICS LTD. PRINTED IN CANADA

SUBMITTALS IDENTIFICATION SHEET

PROJECT: Wastewater Treatment Plant Upgrade
Iqaluit, Nunavut

NUNAMI
STANTEC LIMITED
1088C Noble House
Iqaluit NU
www.stantec.com

CONTRACTOR: Kudlik Construction Ltd, Project 2018-062

Telephone: 867-979-1166

E-mail: srousseau@kudlik.biz

SUBCONTRACTOR:

Person responsible:

Telephone: () E-mail:

PRODUCT SUBMITTED:

☐ As Specified

☐ Alternate

SUPPLIER or MANUFACTURER: Manugypse

5385 rue Rideau Quebec (Qc) G2E 5V9

Person responsible: mathieu lachance

Telephone: E-mail: mathieu.lachance@manugypse.com

DESCRIPTION OF SUBMITTAL: fire retardant treated wood

# of pages:

Reference to drawings:

Reference to specs:

Division: 06 - 09 Section: 06 10 00 - 09

REMARKS:

REVIEW AND COMMENTS (for use by Consultants):

Structural review stamp also required to be fully reviewed

STANTEC PROJECT #: 110126045

SUBMITTAL # SU 008

This review by Stantec is for general conformance with the design concept of Stantec's design of the:

☑ Architectural ☐ Structural ☐ Mechanical ☐ Electrical ☐ Other

component(s) only and does not mean that Stantec has verified or approves the shop drawing(s). The Contractor remains solely responsible for the shop drawing(s) and this review by Stantec does not relieve the Contractor of the Contractor's responsibility for errors or omissions in the shop drawing(s) or for meeting all requirements of the contract documents. This review does not mean that Stantec approves the detailed design inherent in the shop drawing, responsibility for which shall remain with the Contractor submitting same, nor does this review mean that Stantec accepts any deviation of the shop drawing(s) from the contract documents. The Contractor is responsible for confirming all dimensions and correlating them at the job site, for all construction means, methods and techniques, and for coordination of construction work of all trades, including coordination of all shop drawings.

Stantec

☑ REVIEWED

☐ REVIEWED, AS NOTED

☐ REVISE AND RESUBMIT

☐ NOT REVIEWED

DATE 2018-06-27

BY Jason King

Review of this submission is for compliance with general intent of the contract. This review does not relieve the Sub-Contractor, Supplier or Manufacturer of responsibility for error or omissions in the submission or the responsibility of meeting all requirements of the contract documents. Any deviation from the contract documents initiated by the Sub-Contractor, Supplier or Manufacturer shall be at their sole risk. QUANTITIES AND DETAIL DIMENSIONS ARE THE SUB-CONTRACTORS OR SUPPLIERS RESPONSIBILITY. VERIFY DATA WITH FIELD DIMENSIONS.

SUBMITTAL TRACKING No.: **SU-008**

2018-06-11

Georgia-Pacific

DensGlass® Sheathing

06 16 43 item 2.1.1
exterior wall and roof

Technical Service Hotline 1.800.225.6119 or
www.gpgypsum.com

Manufacturer

Georgia-Pacific Gypsum LLC
133 Peachtree Street
Atlanta, GA 30303

Georgia-Pacific Canada LP
7070 Mississauga Road, Unit 120
Mississauga, ON L5M 7V9

Technical Service Hotline: 1-800-225-6119

Description

DensGlass® Sheathing is a gypsum panel made of a treated, water-resistant core, surfaced with fiberglass mats and a GOLD colored primer coating. Providing superb protection from the elements, DensGlass Sheathing is resistant to delamination and deterioration due to weather exposure—even during construction delays that last as long as twelve months after installation and are backed by a limited warranty against delamination and deterioration for up to 12 months of exposure to normal weather conditions.* DensGlass Sheathing panels are also mold-resistant, and have scored a 10, the highest level of performance for mold resistance under ASTM D 3273 test method.

DensGlass Sheathing exhibits a dimensional stability that assures resistance to warping, rippling, buckling and sagging for a flat and even substrate and is noncombustible as defined and tested in accordance with ASTM E 136. Since DensGlass Sheathing is strong in both directions, it may be installed either parallel or perpendicular to wall framing members (always follow specific assembly installation instructions).

Primary Uses

Because of the superior performance of DensGlass Sheathing, it is specified for exterior walls, ceilings and soffits in a wide variety of applications. These include exterior insulation and finish systems (EIFS); cavity brick or stone veneer applications; cladding such as wood siding, vinyl siding, composition siding, wood shingles, shakes, conventional stucco systems, plywood siding panels; and interior finish systems that require a substrate panel with superior fire and moisture resistance.

For EIFS applications, DensGlass Sheathing is an ideal substrate for adhesive or mechanical application of expanded polystyrene (EPS) or extruded polystyrene insulation, and is recommended in all climate zones.

Consult with the local building code, design professional, owner or cladding manufacturer for weather resistive barrier requirements. Manufacturers of weather resistive barriers, which include flexible membranes, self-adhered membrane and liquid applied, have found DensGlass Sheathing to be a suitable substrate for their systems.

DensGlass Sheathing is an ideal product for exterior ceilings and soffits for both cold and warm climate zones. It resists sagging, even under exceptionally humid conditions. Panels are applied directly to structural framing. Surface and joints may be finished and painted, or surfaced with an exterior finish system.

Limitations

DensGlass Sheathing is resistant to normal weather conditions, but it is not intended for immersion in water. Cascading roof/floor water should be directed away from the sheathing until appropriate drainage is installed.

Avoid any condition that will create moisture in the air and condensation on the exterior walls during periods when the exterior temperature is lower than the interior. The use of forced air heaters creates volumes of water vapor which, when not properly vented, can condense on building materials. The use of these heaters and any resulting damage is not the responsibility of Georgia-Pacific Gypsum. Consult heater manufacturer for proper use and ventilation. Vapor barrier may also restrict ventilation.

When DensGlass Sheathing panels are used in slanted wall applications, that portion of the wall must be temporarily protected from the elements by the use of a water-resistant barrier prior to application of the cladding. Do not allow water to pond or settle on sheathing. Also, exposed wall ends such as those that may be found in parapets must be covered to prevent water from infiltrating the cavity.

Georgia-Pacific Gypsum does not warrant and is not responsible or liable for the performance of the cladding or exterior systems applied over DensGlass Sheathing. The suitability and compatibility of any system is the responsibility of the system manufacturer or design authority.

Do not laminate DensGlass Sheathing to masonry surfaces; use furring strips or framing.

DensGlass Sheathing is not intended for roof applications. For roof applications, consult our DensDeck® Roof Board brochure.

DensGlass Sheathing is not intended for interior or exterior tile applications. For interior tile applications, consult our DensShield® Tile Backer brochure.

DensGlass Sheathing should not be used in lieu of plywood where required.

Do not apply DensGlass Sheathing below grade.

For all installations, design details such as fasteners, sealants and control joints per system specifications must be properly installed. Openings and penetrations must be properly flashed and sealed. Failure to do so will void the warranty.

Do not use DensGlass Sheathing as a base for nailing or mechanical fastening. Fasteners should be flush to the face of the board, not countersunk.

Technical Data

DensGlass Sheathing is noncombustible as described and tested in accordance with ASTM E 136.

DensGlass Sheathing exceeds ASTM C 1396 sheathing standards for humidified deflection by a factor of 10 in tests over the standard for regular gypsum sheathing.

5/8″ (15.9 mm) DensGlass® Fireguard® Sheathing is UL and ULC classified **Type DGG.**

When tested, as manufactured, DensGlass Sheathing conforms to ASTM C 1177.

Flame spread and smoke develop rating of 0/0 when tested in accordance with ASTM E 84 or CAN/ULC S-102.

* For complete warranty details, visit www.gpgypsum.com.

continued

Submittal Approvals

Job Name _____

Contractor _____

Date _____

Stamps/Signatures

Georgia-Pacific

DensGlass® Sheathing

Technical Service Hotline 1.800.225.6119 or
www.gpgypsum.com

Product Data

Thicknesses: 1/2″ (12.7 mm); 5/8″ (15.9 mm) is Type X
Width: 4′ (1220 mm) standard, tolerance up to ± 1/8″ (3.2 mm)
Lengths: 8′ (2438 mm), 9′ (2743 mm) or 10′ (3048 mm) standard
Edges: Square

Physical Properties

Properties	1/2″ (12.7 mm) DensGlass® Sheathing	5/8″ (15.9 mm) DensGlass® Fireguard® Sheathing
Width, nominal	4′ (1219 mm) ± 1/8″ (3 mm)	4′ (1219 mm) ± 1/8″ (3 mm)
Length, standard	8′ (2440 mm), 9′ (2743 mm), 10′ (3048 mm), ± 1/4″ (6 mm)	8′ (2440 mm), 9′ (2743 mm), 10′ (3048 mm), ± 1/4″ (6 mm)
Weight, nominal, lbs./sq. ft. (Kg/m^2)	1.9 (9)	2.5 (12)
Bending radius	6′ (1829 mm)[5]	8′ (2438 mm)[5]
Racking strength[6], lbs./ft. (dry) (N/m), Ultimate–not design value	>540 (>7878)	>654 (>9544)
Flexural strength[1], parallel, lbf. (N), 4′ weak direction	≥80[6] (356)	≥100 (445)
Compressive strength	min. 500 psi (3445 kPa)	min. 500 psi (3445 kPa)
Humidified deflection[1, 4]	2/8″ (6 mm)	1/8″ (3 mm)
Permeance[2], Perms (ng/Pa•s•m^2)	>23 (1300)	>17 (970)
R Value[3], ft^2•°F•hr/BTU (m^2•K/W)	.56 (0.099)	.67 (0.118)
Combustibility[7]	Noncombustible	Noncombustible
Linear expansion with moisture change, in/in %RH (mm/mm %RH)	6.25 x 10^{-6}	6.25 x 10^{-6}
Surface burning characteristics per ASTM E 84 or CAN/ULC-S102: flame spread/smoke developed	0/0	0/0
Coefficient of thermal expansion, in/in/°F (mm/mm/°C)	8.5 x 10^{-6} (15.3 x 10^{-6})	8.5 x 10^{-6} (15.3 x 10^{-6})

[1] Tested in accordance with ASTM C 473
[2] Tested in accordance with ASTM E 96 (dry cup method)
[3] Tested in accordance with ASTM C 518 (heat flow meter)
[4] Specified values per ASTM C 1177
[5] Double fasteners on ends as needed
[6] Tested in accordance with ASTM E 72
[7] As defined and tested in accordance with ASTM E 136

Georgia-Pacific Gypsum

U.S.A.– Georgia-Pacific Gypsum LLC
Canada – Georgia-Pacific Canada LP

SALES INFORMATION AND ORDER PLACEMENT

U.S.A. Midwest: **1-800-876-4746** West: **1-800-824-7503**
South: **1-800-327-2344** Northeast: **1-800-947-4497**

CANADA Canada Toll Free: **1-800-387-6823**
Quebec Toll Free: **1-800-361-0486**

TECHNICAL INFORMATION

U.S.A. and Canada: **1-800-225-6119**
www.gpgypsum.com

©2010 Georgia-Pacific Gypsum LLC. All rights reserved. Printed in the U.S.A. on 10% post-consumer recycled stock. 12/10. GP-TM Lit. Item #532250.

TRADEMARKS Unless otherwise noted, all trademarks are owned by or licensed to Georgia-Pacific Gypsum LLC.

WARRANTIES, REMEDIES AND TERMS OF SALE For current warranty information for this product, please go to www.gpgypsum.com and select the product for warranty information. All sales of this product by Georgia-Pacific are subject to our Terms of Sale available at www.gpgypsum.com.

UPDATES AND CURRENT INFORMATION The information in this document may change without notice. Visit our website at www.gpgypsum.com for updates and current information.

CAUTION For product fire, safety and use information, go to www.gp.com/safetyinfo or call 1-800-225-6119.

HANDLING AND USE–CAUTION This product contains fiberglass facings which may cause skin irritation. Dust and fibers produced during the handling and installation of the product may cause skin, eye and respiratory tract irritation. Avoid breathing dust and minimize contact with skin and eyes. Wear long sleeve shirts, long pants and eye protection. Always maintain adequate ventilation. Use a dust mask or NIOSH/MSHA approved respirator as appropriate in dusty or poorly ventilated areas.

FIRE SAFETY CAUTION Passing a fire test in a controlled laboratory setting and/or certifying or labeling a product as having a one-hour, two-hour, or any other fire resistance or protection rating and, therefore, as acceptable for use in certain fire rated assemblies/systems, does not mean that either a particular assembly/system incorporating the product, or any given piece of the product itself, will necessarily provide one-hour fire resistance, two-hour fire resistance, or any other specified fire resistance or protection in an actual fire. In the event of an actual fire, you should immediately take any and all actions necessary for your safety and the safety of others without regard for any fire rating of any product or assembly/system.

09 21 16 item 2.1.1
as per RFI-12
gypsum type x standard

CertainTeed

Type X

16 mm interiror gypsum

Gypsum Board

Product Data and Submittal

Product Description

CertainTeed Type X Gypsum Board is an interior gypsum board consisting of a solid set, fire-resistive, Type X gypsum core enclosed in ivory-colored face paper and a strong liner back paper. CertainTeed Type X board features a specially formulated core providing fire resistance ratings when used in tested assemblies. Long edges are slightly tapered, allowing joints to be reinforced and concealed with joint tape and joint compound. CertainTeed Type X Gypsum Board is available in a variety of lengths and widths.

Basic Uses

CertainTeed Type X Gypsum Board is used for interior walls and ceilings in residential and commercial applications requiring extended fire ratings. It can be used for new construction or renovations over wood or steel framing. The boards are typically nailed or screwed to studs spaced 16" (400 mm) or 24" (610 mm) o.c., but can be applied by laminating or with the use of an adhesive.

Advantages

- Fire ratings up to four hours.
- Consistently high quality.
- Uniformly flat, attractive appearance; no shadows.
- High edge hardness.
- No wavy edges, warps, bows or deformities.
- Uniform high-strength cores eliminate crumbling, cracking.
- Edge tapers consistent to form perfect joints.
- Excellent thermal barrier and sound attenuation qualities.
- Green Guard certified.

Limitations

- Exposure to continuous moisture or extreme temperatures should be avoided. Not recommended for continuous exposure to temperatures exceeding 125˚F (52˚C).
- Framing spacing should not exceed 24" (610 mm) o.c.
- Should be stored indoors and off ground surface.
- Boards should be stacked flat with care taken to prevent sagging or damage to edges, ends and surfaces.
- Storing board lengthwise, leaning against the framing is not recommended.
- Boards should be carried, not dragged, to place of installation to prevent damaging finished edges.
- Cutting and scoring should be done from the face side.
- In cold weather or during joint finishing, temperatures within the enclosure should stay within the range of 50˚ to 95˚F (10˚ to 35˚C) and with sufficient ventilation to carry off excess moisture.

Product Data

Thicknesses: 5/8" (15.9 mm)

Widths: 4' (1220 mm) standard
54" (1370 mm)

Lengths: 8' to 12'
(2440 mm to 3660 mm)

Weight (nominal): 2.2 psf (10.7 kg/m^2)

Edges: Tapered

Packaging: Two pieces per bundle, face-to-face and end-taped

Special widths, lengths or edges may be available on special order. Consult your CertainTeed sales representative.

Technical Data

Composition and Materials

Manufactured panel with gypsum core, encased in paper. Various additives are added to the core to enhance fire resistive qualities.

Continued on back

Job Name

Contractor **Date**

Products Specified:

Submittal Approvals
(Stamps or Signatures)

CertainTeed
SAINT-GOBAIN

Surface Burning Characteristics

CertainTeed Type X Gypsum Board has a Flame Spread rating of 15 and Smoke Developed rating of 0, in accordance with ASTM E84, (UL 723, UBC 8-1, NFPA 255, CAN/ULC-S102).

Fire Resistance

Fire resistance tests are conducted in accordance with ASTM E 119, (ANSI/UL 263, UBC 7-1, NFPA 251, CAN/ULC-S101) and no warranty is made other than conformance to the standard under which the assembly was tested. Minor discrepancies may exist in the values of ratings, attributable to changes in materials and standards, as well as differences between testing facilities. Assemblies are listed as “combustible” (wood framing) and “noncombustible” (concrete and/or steel construction). For fire resistance ratings refer to the Gypsum Association Fire Resistance Design Manual and UL Fire Resistance Directory - Vol. 1.

Applicable Standards and References

- ASTM C1396 Type X Standard
- CAN/CSA-A82.27
- ASTM C840
- CAN/CSA-A82.31
- Gypsum Association GA-216
- Gypsum Association GA-214
- ICC International Building Code (IBC)
- ICC International Residential Code (IRC)
- National Building Code of Canada (NBCC)

Installation

Recommendations

Installation of CertainTeed Type X Gypsum Boards should be consistent with methods described in the standards and references noted. Cutting should be from the face side of the boards for best results.

Decoration

CertainTeed Type X Gypsum Board accepts most types of paints, texture and wall covering materials. The surface shall be primed and sealed with a full-bodied latex primer before applying a final decorative material. This will equalize the suction between the joint compounds and the paper surface.

For best painting results, all surfaces, including joint compound, should be clean, dust-free and not glossy. If glossy paints are used, a thin skim coat of compound over the entire surface, Level 5 finish, is recommended to reduce highlighting or joint photographing. This method is also recommended for areas of critical sidelighting of natural or artificial light sources.

A sealer application under wallpaper or other wall covering is also recommended so the board surface will not be damaged if the covering is subsequently removed during redecorating. Joint treatment must be thoroughly dry before proceeding with primer-sealer application and final decoration.

Notice

The information in this document is subject to change without notice. CertainTeed assumes no responsibility for any errors that may inadvertently appear in this document.

SAINT-GOBAIN

CertainTeed Corporation

ROOFING • SIDING • TRIM • DECKING • RAILING • FENCE • GYPSUM • CEILINGS • INSULATION

20 Moores Road Malvern, Pa 19355 Professional: 800-233-8990 Consumer: 800-782-8777 certainteed.com

© 2/17 CertainTeed Corporation, Printed in the USA Code No. CTG-2337

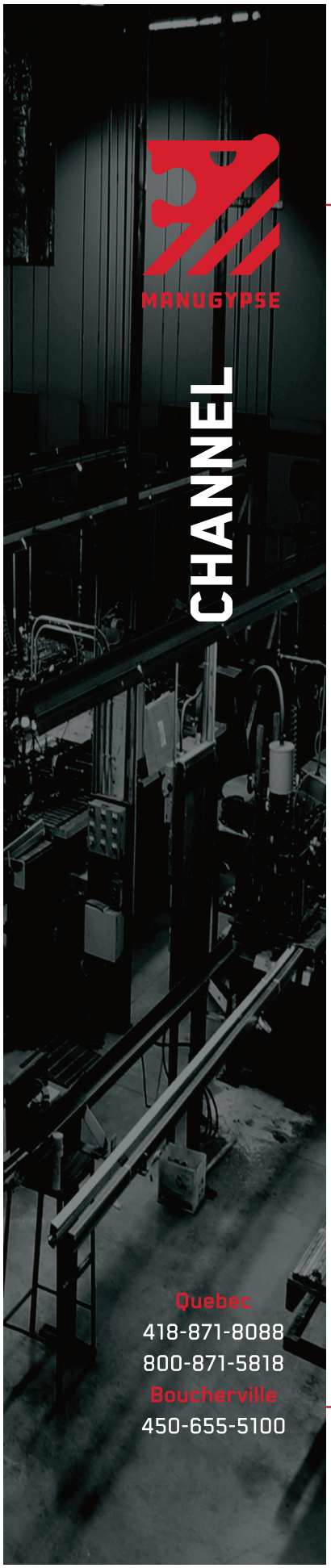

SPECIFICATION SHEET

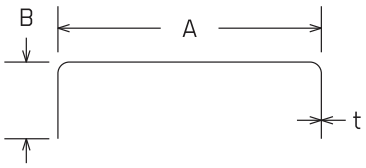

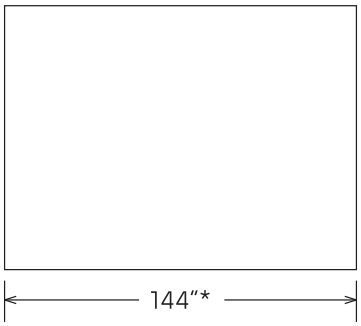

*Other Lengths Available On Request

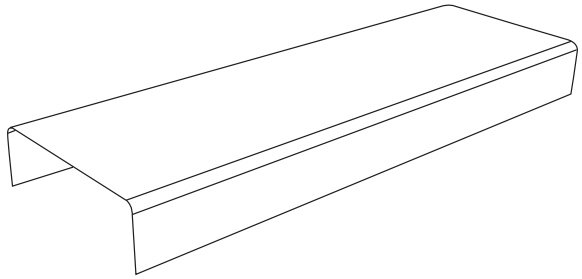

Stud in compliance with standards;
CAN/CSA S136-12 / ASTM A653-11 / AISI S201-12

Legend:

A	=	Web (in)
B	=	Flange (in)
t	=	Minimum thickness of steel design coating not included (in)

CSSBI NOMENCLATURE (AISI - S201-12)

Example:	150U50-43
150	A: 1 1/2 = 150
U	Stud type: U = U-Stud
50	B: 1/2 = 50
43	t: 43 = 43 mils

CSSBI
Canadian Sheet Steel Building Institute

Nov. 2017

CHANNEL

CONFIGURATIONS

A (in)	B (in)	t (mils)
1-1/2 (150)	1/2 (50)	43 - 54

THICKNESS

For table calculations, the standard S136-12 prescribes the thickness of the material used.

Nominal: Thickness used - steel without protective coating for table calculations
Minimum (t): Minimum steel thickness allowed without protective coating (95% of design)
Coating: Protective coating applied to the steel. G40 = 0.40 oz / ft2 G60 = 0.60 oz / ft2
1 oz / sq. ft. estimated .00168 in. total both sides (standard A653 8.1.3-11)
Measured: Minimum measured thickness of a stud with protective coating (final product)

min (mils)	nominal t (in)	minimum (95% nominal)	minimum coating G	minimum coating oz/ft2	minimum coating (in)	Measured (in)	Grade ksi
43	0.0451	0.0428	60	0.60	0.00101	0.0439	33
54	0.0566	0.0538	60	0.60	0.00101	0.0548	50

CAN/CSA S136-12 : North American Specification for the Design of Cold-Formed Steel Structural Members
ASTM A653-11 : Standard Specification for Steel Sheet, Zinc-Coated (Galvanized) or Zinc-Iron Alloy-Coated (Galvanealed) by Hot Dip Process
AISI S201-12 : North American Standard for Cold-Formed Steel Framing

MANUGYPSE
Quebec 418-871-8088 • 800-871-5818
Boucherville 450-655-5100

Nov. 2017

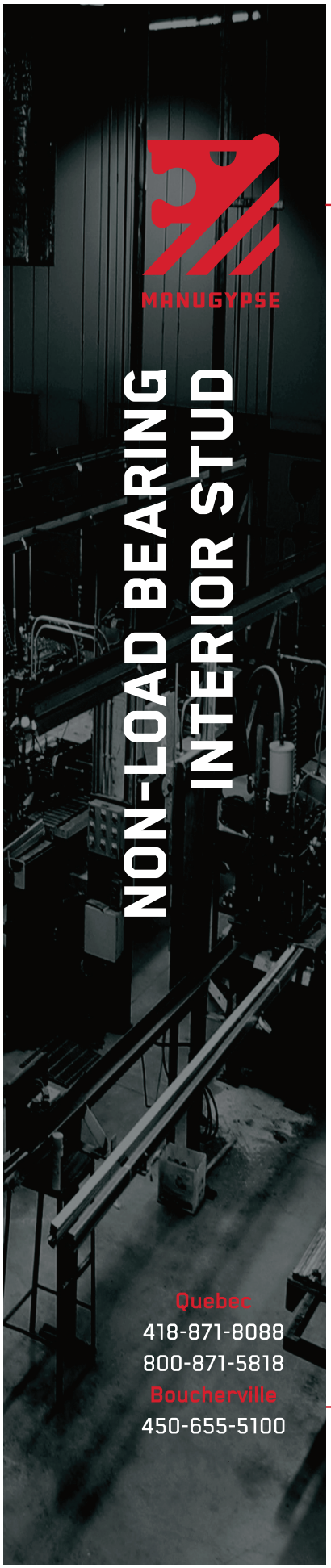

09 22 16 item 2.1
gauge 18
interior metal stud

SPECIFICATION SHEET

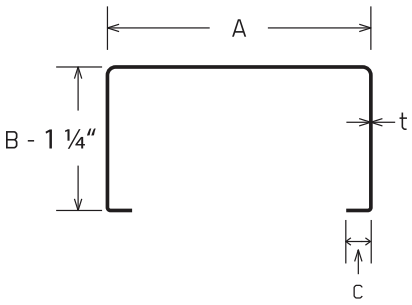

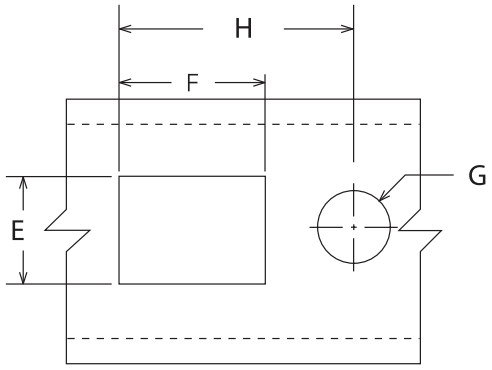

A: Stud web:
Available widths: 1-5/8 , 2-1/2 , 3-5/8 , 6
Dimensions as specified in norm ASTM C645-15
Minimum protective coating G40 (C653-11)

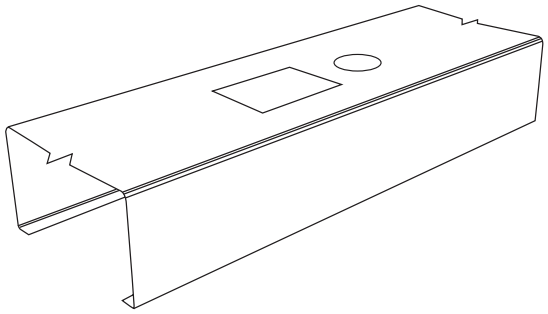

Stud in compliance with standards;
CAN/CSA S136-12 / ASTM A653-11 , C645-15 , C754-15 / AISI S201-12

Legend:

A	=	Web (in)
B	=	Flange (in)
C	=	Lip (in)
t	=	Minimum thickness of steel design coating not included (in)

CSSBI NOMENCLATURE (AISI - S201-12)

Example:	362S125-18
362	A: 3-5/8 = 3.625
S	Stud type: S = Stud T = Track
125	B: 1-1/4 = 1.250
18	t: 18 = 18 mils

CSSBI
Canadian Sheet Steel Building Institute

Nov. 2017

NON-LOAD BEARING INTERIOR STUD

CONFIGURATIONS

A* (in)	B (in)	t (mils)	C (in)	E** (in)	F (in)	G (in)	H (in)
1-5/8(162)	1-1/4 (125)	18	3/16	3/4	2	3/4	3
2-1/2 (250)	1-1/4 (125)	18	3/16	3/4	2	3/4	3
3-5/8 (362)	1-1/4 (125)	18	3/16	1-1/2	2	1-3/8	3-1/4
6 (600)	1-1/4 (125)	18	3/16	1-1/2	2	1-3/8	3-1/4

*other dimensions on request

**AISI S201-12 : Maximum 50% of "A"

Table of permissible elevations on composite walls with 5/8" gypsum panels on each side as described in ASTM C754-15

Stud	Deflection Limit	With studs **12** in. O.C. Lateral Load			With studs **16** in. O.C. Lateral Load			With studs **24** in. O.C. Lateral Load		
		5 psf.	7.5 psf.	10 psf.	5 psf.	7.5 psf.	10 psf.	5 psf.	7.5 psf.	10 psf.
162S125-18 (1-5/8)	L/120	13-0f	10-8	9-3f	11-3	9-3f	8-0f	9-3f	n/a	n/a
	L/240	11-1	9-8	8-9	10-1	8-9	7-11	8-9	n/a	n/a
	L/360	9-10	8-7	7-9	8-11	7-9	n/a	7-9	n/a	n/a
250S125-18 (2-1/2)	L/120	16-4f	13-4	11-7f	14-2f	11-7f	10-0f	11-7f	9-5f	8-2f
	L/240	14-2	12-4	11-3	12-10	11-3	10-0f	11-3	9-5f	8-2f
	L/360	12-9	11-2	10-2	11-7	10-2	9-0	10-2	8-6	n/a
362S125-18 (3-5/8)	L/120	18-8f	15-3f	13-2f	16-2f	13-2f	11-5f	13-2f	10-9f	9-4f
	L/240	16-8	14-7	13-2f	15-2	13-2f	11-5f	13-2f	10-9f	9-4f
	L/360	14-7	12-9	11-6	13-3	11-6	10-4	11-6	9-11	8-11
600S125-18 (6)	L/120	23-2f	18-11f	16-4f	20-1f	16-4f	14-2f	16-4f	13-4f	n/a
	L/240	22-9	18-11f	16-4f	20-1f	16-4f	14-2f	16-4f	13-4f	n/a
	L/360	19-11	17-5	15-10	18-1	15-10	14-2f	15-10	13-4f	n/a

f= Indicates bending controls

THICKNESS

For table calculations, the standard S136-12 prescribes the thickness of the material used.

Nominal: Thickness used - steel without protective coating for table calculations

Minimum (t): Minimum steel thickness allowed without protective coating (95% of design)

Coating: Protective coating applied to the steel. G40 = 0.40 oz / ft2 G60 = 0.60 oz / ft2
1 oz / sq. ft. estimated .00168 in. total both sides (standard A653 8.1.3-11)

Measured: Minimum measured thickness of a stud with protective coating (final product)

min (mils)	nominal t (in)	minimum (95% nominal)	minimum coating G	minimum coating oz/ft2	minimum coating (in)	Measured (in)	Grade ksi
18	0.0188	0.0179	40	0.40	0.00067	0.0185	33

CAN/CSA S136-12 : North American Specification for the Design of Cold-Formed Steel Structural Members
ASTM A653-11 : Standard Specification for Steel Sheet, Zinc-Coated (Galvanized) or Zinc-Iron Alloy-Coated (Galvanealed) by Hot Dip Process
ASTM C645-15 : Standard Specification for Nonstructural Steel Framing Members
AISI S201-12 : North American Standard for Cold-Formed Steel Framing
ASTM C754-15 : Standard Specification for Installation of Steel Framing Members to Receive Screw-Attached Gypsum Panel Products

MANUGYPSE

Quebec 418-871-8088 • 800-871-5818
Boucherville 450-655-5100

Nov. 2017



09 22 16 item 2.1.8
hat channel
18 gauge

SPECIFICATION SHEET

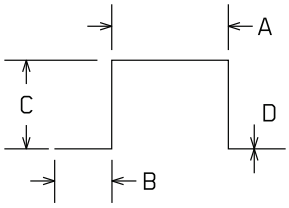

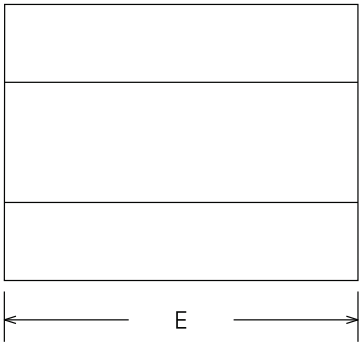

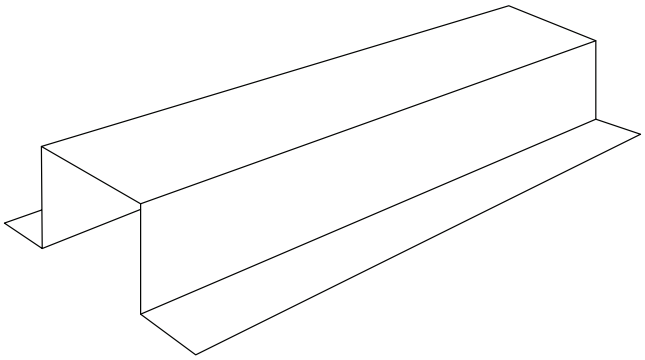

Legend:

A	=	1" minimum
B	=	1/2" (Other Dimensions Available On Request)
C	=	Between 3/4" and 2" (Other Dimensions Available On Request)
D	=	18, 33, 43, 54, 68 Mils.
E	=	10' (Other Lengths Available On Request)

Canadian Sheet Steel Building Institute

Nov. 2017



05 41 00 item 2.2.2

SPECIFICATION SHEET

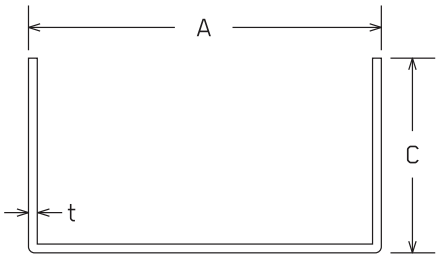

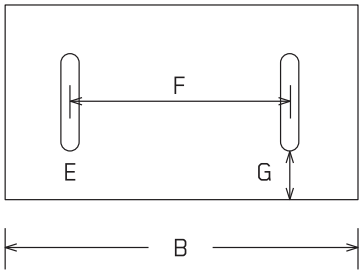

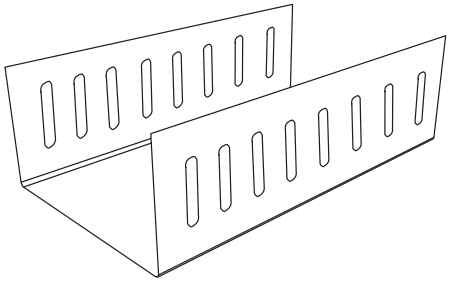

Stud in compliance with standards;
CAN/CSA S136-12 / ASTM A653-11 , C645-15 , C754-15 / AISI S201-12

Legend:

A	=	Web (in)
B	=	Length 120"
C	=	Flange (in)
t	=	Minimum thickness of steel design coating not included (in)
E	=	3/16" X 1-1/2"
F	=	1"
G	=	1/2"

CSSBI NOMENCLATURE (AISI - S201-12)

Example:	362ST250-33
362	A: 3-5/8 = 3.625
ST	Stud type: ST = Slotted track
250	C: 2-1/2 = 2.5"
33	t: 0.033 = 33 mils

CSSBI
Canadian Sheet Steel Building Institute

Nov. 2017

SLOTTED TRACK

CONFIGURATIONS

A* (in)	C (in)	t (mils)
2-1/2 (250)	2-1/2 (250)	18-33-43
3-5/8 (362)	2-1/2 (250)	18-33-43-54
6 (600)	2-1/2 (250)	18-33-43-54

THICKNESS

For table calculations, the standard S136-12 prescribes the thickness of the material used.

Nominal: Thickness used - steel without protective coating for table calculations
Minimum (t): Minimum steel thickness allowed without protective coating (95% of design)
Coating: Protective coating applied to the steel. G40 = 0.40 oz / ft2 G60 = 0.60 oz / ft2
1 oz / sq. ft. estimated .00168 in. total both sides (standard A653 8.1.3-11)
Measured: Minimum measured thickness of a stud with protective coating (final product)

min (mils)	nominal t (in)	minimum (95% nominal)	minimum coating G	minimum coating oz/ft2	minimum coating (in)	Measured (in)	Grade ksi
18	0.0188	0.0179	40	0.40	0.00067	0.0185	33
33	0.0346	0.0329	60	0.60	0.00101	0.0339	33
43	0.0451	0.0428	60	0.60	0.00101	0.0439	33
54	0.0566	0.0538	60	0.60	0.00101	0.0548	50
68	0.0713	0.0677	60	0.60	0.00101	0.0687	50
97	0.1017	0.0966	60	0.60	0.00101	0.0976	50

CAN/CSA S136-12 : North American Specification for the Design of Cold-Formed Steel Structural Members
ASTM A653-11 : Standard Specification for Steel Sheet, Zinc-Coated (Galvanized) or Zinc-Iron Alloy-Coated (Galvanealed) by Hot Dip Process
ASTM C645-15 : Standard Specification for Nonstructural Steel Framing Members
AISI S201-12 : North American Standard for Cold-Formed Steel Framing
ASTM C754-15 : Standard Specification for Installation of Steel Framing Members to Receive Screw-Attached Gypsum Panel Products

MANUGYPSE
Quebec 418-871-8088 • 800-871-5818
Boucherville 450-655-5100

Nov. 2017

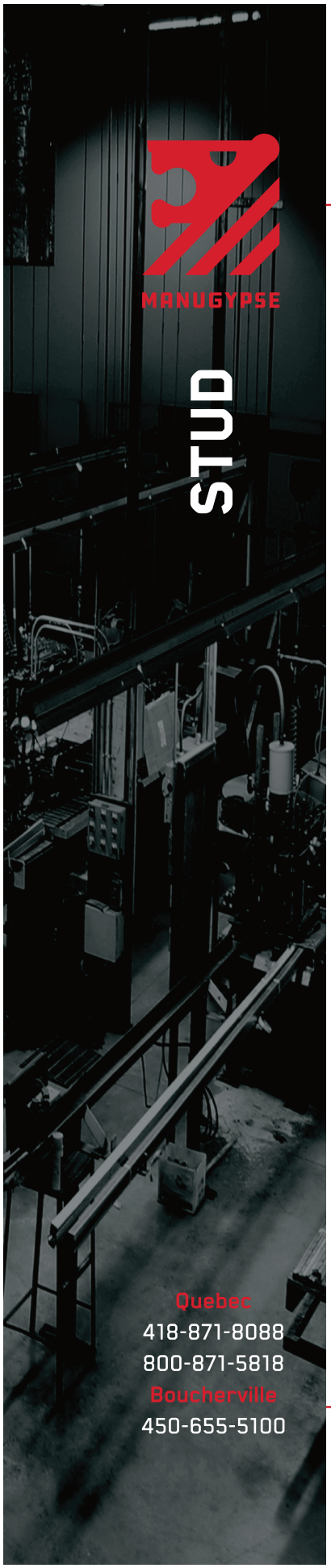

05 41 00 item 2.2
exterior stud gauge 16

SPECIFICATION SHEET

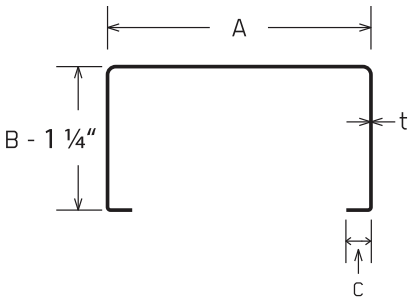

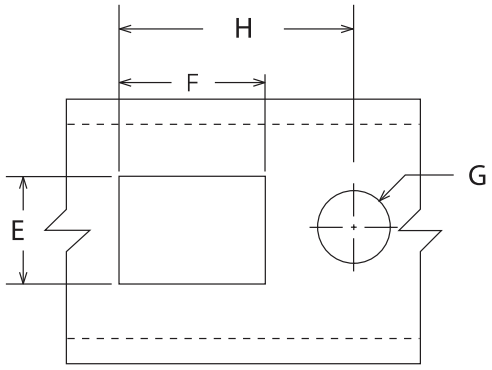

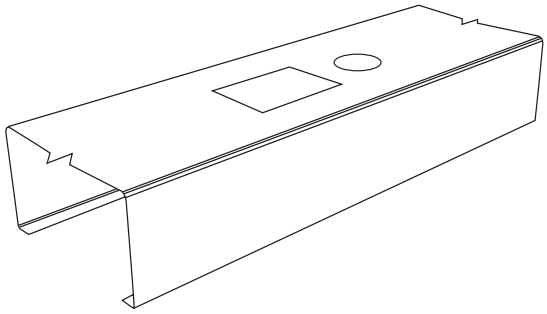

Stud in compliance with standards;
CAN/CSA S136-12 / ASTM A653-11 / AISI S201-12

Legend:

A	=	Web (in)
B	=	Flange (in)
C	=	Lip (in)
t	=	Minimum thickness of steel design coating not included (in)

CSSBI NOMENCLATURE (AISI - S201-12)

Example:	362S125-33
362	A: 3-5/8 = 3.625
S	Stud type: S = Stud T = Track
125	B: 1-1/4 = 1.250
33	t: 33 = 33 mils

CSSBI
Canadian Sheet Steel Building Institute

Nov. 2017

STUD

CONFIGURATIONS

A* (in)	B * (in)	t (mils)	C (in)	E** (in)	F (in)	G (in)	H (in)
1-5/8(162)	1-1/4 (125)	33	3/16	3/4	2	3/4	3
2-1/2 (250)	1-1/4 (125)	33-43	3/16	3/4	2	3/4	3
3-5/8 (362)	1-1/4 (125)	33-43-54	3/16	1-1/2	2	1-3/8	3-1/4
	1-5/8 (162)	33-43-54-68-97	1/2	1-1/2	2	1-3/8	3-1/4
6 (600)	1-1/4 (125)	33-43-54	3/16	1-1/2	2	1-3/8	3-1/4
	1-5/8 (162)	33-43-54-68-97	1/2	1-1/2	2	1-3/8	3-1/4
8 (800)	1-5/8 (162)	33-43-54-68-97	1/2	1-1/2	2	1-3/8	3-1/4

*other dimensions on request

**AISI S201-12 : Maximum 50% of "A"

THICKNESS

For table calculations, the standard S136-12 prescribes the thickness of the material used.

Nominal: Thickness used - steel without protective coating for table calculations
Minimum (t): Minimum steel thickness allowed without protective coating (95% of design)
Coating: Protective coating applied to the steel. G40 = 0.40 oz / ft2 G60 = 0.60 oz / ft2
1 oz / sq. ft. estimated .00168 in. total both sides (standard A653 8.1.3-11)
Measured: Minimum measured thickness of a stud with protective coating (final product)

min (mils)	nominal t (in)	minimum (95% nominal)	minimum coating G	minimum coating oz/ft2	minimum coating (in)	Measured (in)	Grade ksi
33	0.0346	0.0329	60	0.60	0.00101	0.0339	33
43	0.0451	0.0428	60	0.60	0.00101	0.0439	33
54	0.0566	0.0538	60	0.60	0.00101	0.0548	50
68	0.0713	0.0677	60	0.60	0.00101	0.0687	50
97	0.1017	0.0966	60	0.60	0.00101	0.0976	50

CAN/CSA S136-12 : North American Specification for the Design of Cold-Formed Steel Structural Members
ASTM A653-11 : Standard Specification for Steel Sheet, Zinc-Coated (Galvanized) or Zinc-Iron Alloy-Coated (Galvanealed) by Hot Dip Process
AISI S201-12 : North American Standard for Cold-Formed Steel Framing

MANUGYPSE

Quebec 418-871-8088 • 800-871-5818
Boucherville 450-655-5100

Nov. 2017

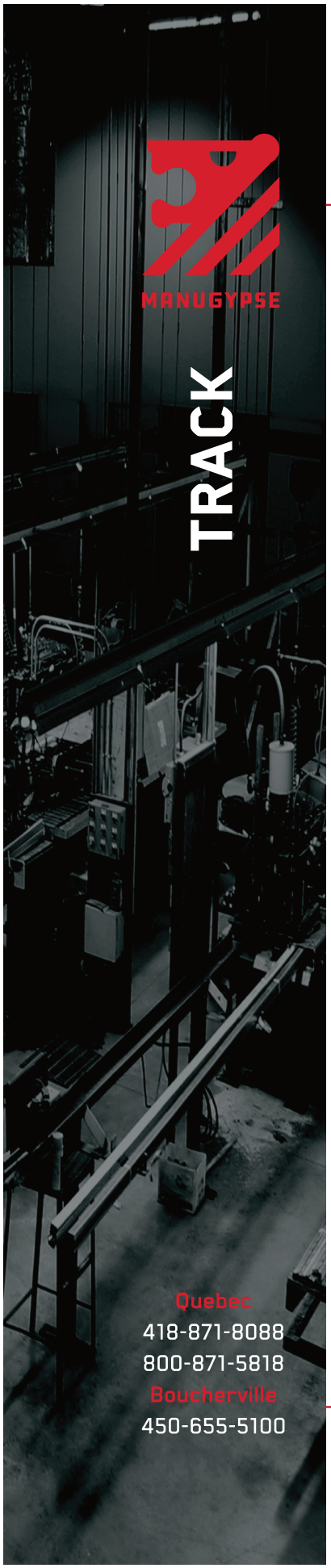

05 41 00
gauge 16 exterior wall
and gauge 18 interiror wall

SPECIFICATION SHEET

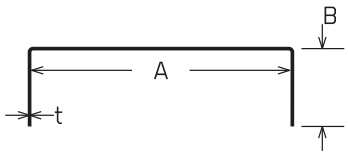

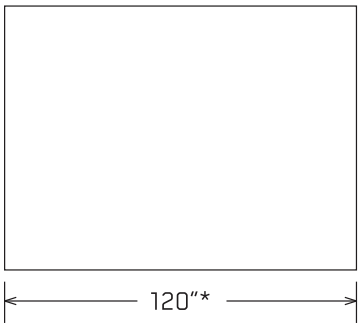

*Other Lengths Available On Request

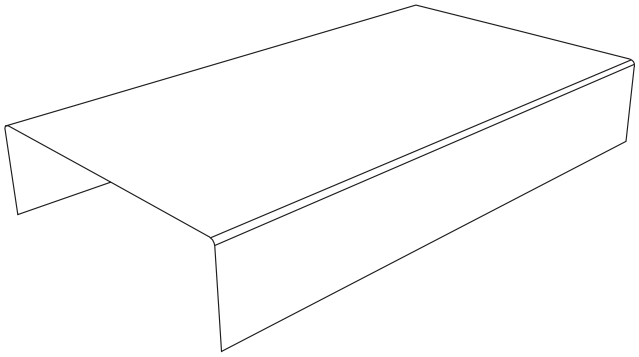

Stud in compliance with standards;
CAN/CSA S136-12 / ASTM A653-11 , C645-15 , C754-15 / AISI S201-12

Legend:

A	=	Web (in)
B	=	Flange (in)
t	=	Minimum thickness of steel design coating not included (in)

CSSBI NOMENCLATURE (AISI - S201-12)

Example:	362T125-33
362	A: 3-5/8 = 3.625
T	Stud type: S = Stud T = Track
125	B: 1-1/4 = 1.250
33	t: 0.033 = 33 mils

CSSBI
Canadian Sheet Steel Building Institute

Nov. 2017

TRACK

CONFIGURATIONS

A* (in)	B (in)	t (mils)
1-5/8(162)	1-1/4 (125)	18-33
	2 (200)	18-33
2-1/2 (250)	1-1/4 (125)	18-33-43
	2 (200)	18-33-43
	2-1/2 (250)	18-33-43
3-5/8 (362)	1-1/4 (125)	18-33-43-54
	2 (200)	18-33-43-54-68-97
	2-1/2 (250)	18-33-43-54-68-97
6 (600)	1-1/4 (125)	18-33-43-54
	2 (200)	18-33-43-54-68-97
	2-1/2 (250)	18-33-43-54-68-97

*Other Dimensions Available on Request

THICKNESS

For table calculations, the standard S136-12 prescribes the thickness of the material used.

Nominal:	Thickness used - steel without protective coating for table calculations
Minimum (t):	Minimum steel thickness allowed without protective coating (95% of design)
Coating:	Protective coating applied to the steel. G40 = 0.40 oz / ft2 G60 = 0.60 oz / ft2
	1 oz / sq. ft. estimated .00168 in. total both sides (standard A653 8.1.3-11)
Measured:	Minimum measured thickness of a stud with protective coating (final product)

min (mils)	nominal t (in)	minimum (95% nominal)	minimum coating G	oz/ft2	(in)	Measured (in)	Grade ksi
18	0.0188	0.0179	40	0.40	0.00067	0.0185	33
33	0.0346	0.0329	60	0.60	0.00101	0.0339	33
43	0.0451	0.0428	60	0.60	0.00101	0.0439	33
54	0.0566	0.0538	60	0.60	0.00101	0.0548	50
68	0.0713	0.0677	60	0.60	0.00101	0.0687	50
97	0.1017	0.0966	60	0.60	0.00101	0.0976	50

CAN/CSA S136-12 : North American Specification for the Design of Cold-Formed Steel Structural Members
ASTM A653-11 : Standard Specification for Steel Sheet, Zinc-Coated (Galvanized) or Zinc-Iron Alloy-Coated (Galvanealed) by Hot Dip Process
ASTM C645-15 : Standard Specification for Nonstructural Steel Framing Members
AISI S201-12 : North American Standard for Cold-Formed Steel Framing
ASTM C754-15 : Standard Specification for Installation of Steel Framing Members to Receive Screw-Attached Gypsum Panel Products

MANUGYPSE

Quebec 418-871-8088 • 800-871-5818
Boucherville 450-655-5100

Nov. 2017

gauge 18 roof and foundation

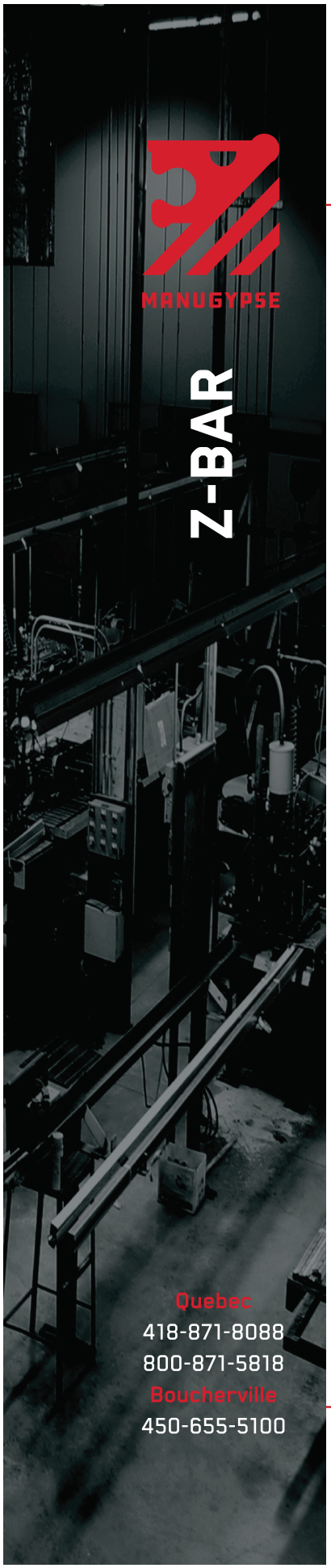

SPECIFICATION SHEET

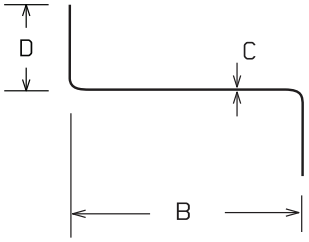

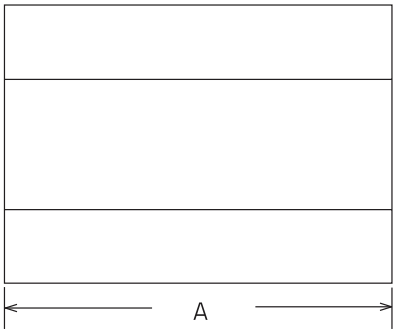

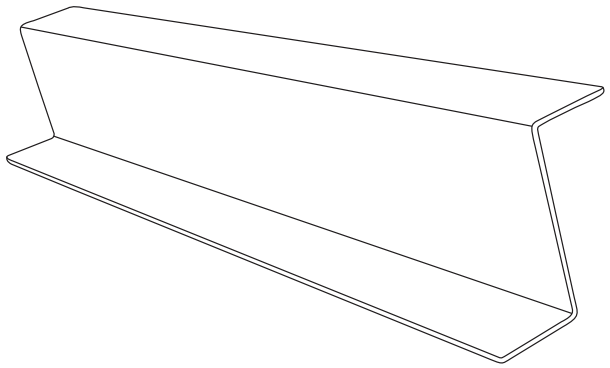

Legend:

A	=	10' (Other Lengths Available On Request)
B	=	1/2" minimum
C	=	18, 34, 43, 54, 68 Mils.
D	=	1/2" minimum

CSSBI
Canadian Sheet Steel Building Institute

Nov. 2017

SUBMITTALS IDENTIFICATION SHEET

PROJECT: Wastewater Treatment Plant Upgrade
Iqaluit, Nunavut

NUNAMI
STANTEC LIMITED
1088C Noble House
Iqaluit NU
www.stantec.com

CONTRACTOR: Kudlik Construction Ltd, Project 2018-062

Telephone: 867-979-1166

E-mail: srousseau@kudlik.biz

SUBCONTRACTOR:

Person responsible:

Telephone: () E-mail:

PRODUCT SUBMITTED:

☐ As Specified

☐ Alternate

SUPPLIER or MANUFACTURER: Canac

Person responsible:

Telephone: E-mail: patrick.belanger@canac.ca

DESCRIPTION OF SUBMITTAL: fire retardant treated wood

# of pages:

Reference to drawings:

Reference to specs:

Division: 06 Section: 06 10 00

REMARKS:

REVIEW AND COMMENTS (for use by Consultants):

STANTEC PROJECT #: 110126045 SUBMITTAL # SU-009

This review by Stantec is for general conformance with the design concept of Stantec's design of the:

☑ Architectural ☐ Electrical
☐ Structural ☐ Other
☐ Mechanical

component(s) only and does not mean that Stantec has verified or approves the shop drawing(s). The Contractor remains solely responsible for the shop drawing(s) and this review by Stantec does not relieve the Contractor of the Contractor's responsibility for errors or omissions in the shop drawing(s) or for meeting all requirements of the contract documents. This review does not mean that Stantec approves the detailed design inherent in the shop drawing, responsibility for which shall remain with the Contractor submitting same, nor does this review mean that Stantec accepts any deviation of the shop drawing(s) from the contract documents. The Contractor is responsible for confirming all dimensions and correlating them at the job site, for all construction means, methods and techniques, and for coordination of construction work of all trades, including coordination of all shop drawings.

Stantec

☑ REVIEWED

☐ REVIEWED, AS NOTED

☐ REVISE AND RESUBMIT

☐ NOT REVIEWED

DATE 2018-06-13

BY Jason King

Review of this submission is for compliance with general intent of the contract. This review does not relieve the Sub-Contractor, Supplier or Manufacturer of responsibility for error or omissions in the submission or the responsibility of meeting all requirements of the contract documents. Any deviation from the contract documents initiated by the Sub-Contractor, Supplier or Manufacturer shall be at their sole risk. QUANTITIES AND DETAIL DIMENSIONS ARE THE SUB-CONTRACTORS OR SUPPLIERS RESPONSIBILITY. VERIFY DATA WITH FIELD DIMENSIONS.

SUBMITTAL TRACKING No.: **SU-009**

2018-06-11

DRICON®

FIRE RETARDANT TREATED WOOD

06 10 00 item 2.2.6



DRICON® FIRE RETARDANT TREATED WOOD

APPLICATION GUIDE

TABLE OF CONTENTS

Product Features 1

Introduction 2
- How it Works 2
- Model Specification 2

Typical Applications 3

Fire Performance 4
- Flame Spread & Smoke Developed Values 4
- Fire Resistance 5
- Calculating Fire Resistance Ratings 6

Strength Properties 7

Additional Information 9
- How It's Made 9
- Recognition 9
- Sources 9
- Available Products 9
- Treatment Depletion 9
- Warranties 10
- Quality Control 10
- Species 10
- Preservative Properties 11
- Appearance 11
- Green Building 11
- Limitations 11
- Hygroscopicity 12
- Corrosion 12

Safety, Use & Handling 13
- Safety Precautions 13
- Tips On Use 13
- Fastener Design Values 13
- Recommended Hardware 13
- Disposal 14
- Finishing 14
- Gluing 14

Standards & Building Codes 15
- Standards of the AWPA 15
- Introduction to Building Codes 15
- Standard, Uniform, National, CABO, NBC Codes ... 16
- International Building Code 17
- International Residential Code 22
- International Mechanical Code 23
- National Fire Protection Assoc. ..... .24

Other FRT Products 25
- Danback™ Wood Backing System 25
- FRX® Exterior FRT Wood 25

Why Wood? .....Back Cover

Note:
This information applies solely to Dricon® fire retardant treated wood. Not all fire retardant treated wood meets the high quality standards of Dricon® FRT wood. They may require different handling practices and may exhibit other characteristics.

When used and handled properly, in accordance with these recommendations, we believe you will receive many years of service from your Dricon® FRT wood.

CONTINUING EDUCATION AIA

For AIA Continuing Education Units on fire retardant and preservative treated wood, go to www.ronblank.com/design_pro.php and look in Division 6 for "FR Wood In Today's Buidlings". The course qualifies for 1 unit in the Health, Safety, Welfare area. Group courses are conducted by certified representatives of Lonza Wood Protection.

There is no equal

Dricon® fire retardant treated wood offers an unmatched group of features.

- Now with more than 30 years of effective protection
- Class A fire retardant treated wood
- Complies with the model codes
- No more corrosive to fasteners and connectors than untreated wood
- Backed by a 40-year limited roof system warranty
- Backed by a 40-year limited preservative warranty
- Backed by a 10-year limited truss manufacturers warranty
- 14 approved species of lumber
- 5 approved species of plywood
- Meets Factory Mutual's requirements for a Class 1 treated wood roof deck
- Treating solution listed in current standards of the American Wood Protection Association as FR-1 for fire retardant (Standard P49) and as SBX for preservative (Standard P25)
- Treated wood meets requirements of AWPA Standard U1; approved for Use Categories UC1, UC2 and UCFA
- FR chemical contains no formaldehyde, halogens, sulfates, or ammonium phosphates
- FR chemical classified as a UL Recognized Component
- FR chemical registered with EPA as a preservative (#62190-9)
- Can be used in contact with concrete that contacts the ground

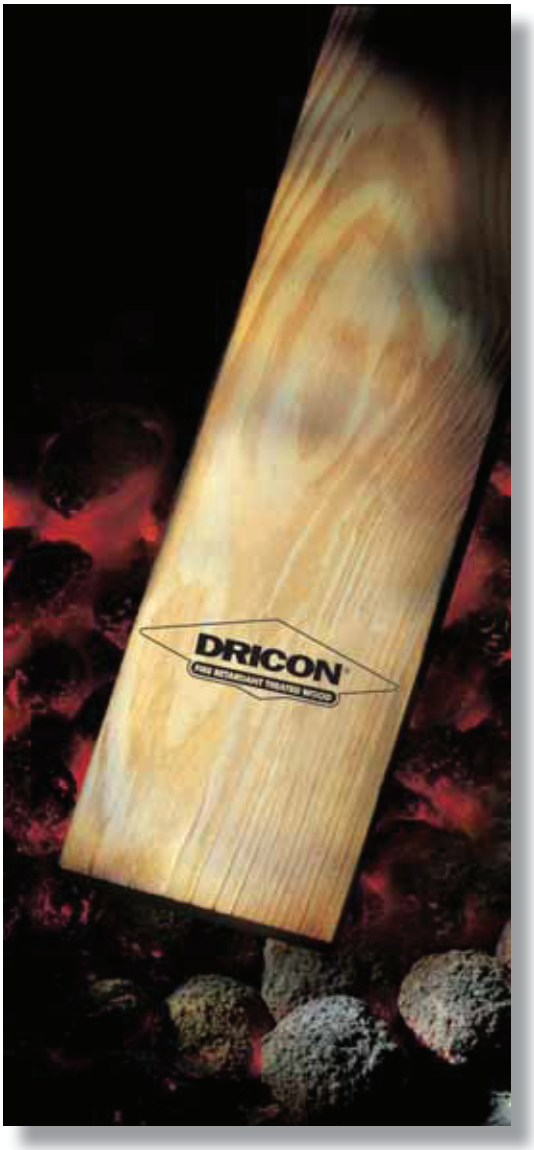

Recognition

Dricon® fire retardant or Dricon® FRT wood complies with or has been granted the following:

- AWPA T1 Section 8.8
- AWPA P49 (FR-1), P25 (SBX)
- AWPA U1 (UC1, UC2, UCFA) and former C9, C20, C27, C31
- Flamespread and Smoke Development Rating of 25 or Less
- Class A FRT wood
- UL Recognized Component
- NFPA 703, 101 Life Safety Code
- ICC-ES ESR-1626
- EPA registration (62190-9)
- NYC MEA 199-81-M, NYC MEA 200-81-M
- Factory Mutual Class 1 Roof Deck
- City of Los Angeles (RR 25122)
- FHA Minimum Property Standard #2600
- HUD Materials Release (1261)
- ASTM D 5516 & D 5664
- MIL-L-19140 Qualified Products List
- National Building Code of Canada
- Truss warranty program with Structural Building Components Association

(All are subject to revision, re-examination)

INTRODUCTION



Dricon® fire retardant treated (FRT) wood is an effective and economical material used to impede flame spread and smoke development in the event of a fire. Building code organizations and related agencies recognize it as an alternative to materials classified as noncombustible for a range of applications.

Introduced in 1981, Dricon® FRT wood is a development of Lonza Wood Protection intended for interior and weather protected applications. Since that introduction, Dricon® FRT wood has proven itself in countless structures of many different types. Plus, it is backed by three limited warranties.

Fire retardant treated wood has been used for decades in multi-family housing and institutional buildings. As more homes are built near forests and wildlands, the threat of fire is increasing to residential property and inhabitants. Dricon FRT wood provides an extra measure of safety for these homeowners.

Dricon® FRT wood also provides greater design latitude for the architect, engineer, and contractor, and removes many barriers associated with conventional noncombustible materials such as masonry and steel. The use of Dricon® FRT wood can result in greater safety, reduced insurance rates, and easing of building code limitations. It offers all of the environmental and other advantages of wood, plus fire retardance and protection against termites and fungal decay.

Each batch of Dricon® FR chemical is inspected and tested to be sure it adheres to the specifications of Lonza Wood Protection and Underwriters Laboratories. In addition, the Dricon® chemical meets current AWPA standards as both a fire retardant and as a preservative in above-ground, weather-protected uses. It does not include formaldehyde nor halogens, sulfates, or ammonium phosphates.

How It Works — Passive Protection



An important feature of Dricon® FRT wood is that it reacts automatically when exposed to fire. Dricon® chemicals react with combustible gases and tars normally generated by untreated wood and convert them to carbon char and harmless carbon dioxide and water. Wood loses strength in a fire only as its cross section is reduced. The surface char acts to insulate underlying wood and slows the rate at which the cross sectional area is reduced in size. The carbon dioxide and water vapor dilute the combustible gases to help reduce flame spread.

Preservative protection comes from the borate ingredient of the fire retardant solution. It renders the wood useless as a food source for termites and fungal decay, thereby avoiding damage caused by these organisms.

Model Specification/ Performance Demonstration

For an editable version of a model specification for Dricon® FRT wood, as well as a video demonstration, see **www.dricon.com**.

TYPICAL APPLICATIONS

Dricon® FRT wood is ideal for use:

- Where other materials would permit a fire to spread without restriction from an ignition source.
- In areas of construction where there is inadequate water supply or fire protection.
- In indoor construction staging, scaffolds, workmen's shanties, etc. during construction or repairs of expensive equipment or multi-story buildings.
- In areas where sprinkler systems cannot be readily installed, such as framing under raised platforms or theater stages, floor framing, walls, stud areas enclosed under roofs and framing for all types of remodeling work.
- In health care facilities where a versatile and economical construction system is desirable, but life safety cannot be compromised.
- In homes located in wildfire-prone areas or anywhere fire safety is a concern. For example, Dricon® FRT wood can be used for residential roof sheathing, studs, blocking, trusses, stairways, and chimney wraps to provide homeowners an extra measure of fire protection.

Some Examples

a. Studs, wall plates, and fire stops with metal lath and plaster or dry wall construction for interior non-bearing walls and partitions where noncombustible construction is required (see codes for specific details).

b. Roof systems including the deck, purlins, joists, and metal-plate-connected wood trusses.

c. Air return plenum framing in HVAC systems

d. Studs, joists, and sheathing in sensitive areas housing computer and electronic systems.

e. Shelving, bins, tote boxes, work benches, pallets.

f. Wood members in fertilizer and chemical plants where highly corrosive conditions would require continuing maintenance of protective coatings on metal systems.

g. Buildings in recreation areas such as camps or lodges, which may be at a high fire risk because they are not inhabited during certain seasons or are in areas of inadequate fire protection services.

h. Architectural applications, such as interior siding and millwork.

i. Sheathing that must meet missile-impact requirements in hurricane-prone areas.

Note: For applications where wood is exposed to weather, use FRX® exterior fire retardant treated wood. Information can be found at www.frxwood.com.









FIRE PERFORMANCE

Dricon® FRT wood has been tested for fire performance by several independent laboratories and meets model code requirements for a Class A fire retardant.

Flame Spread & Smoke Developed Values

The tunnel test compares surface burning characteristics of tested materials to those of asbestos cement board and untreated red oak lumber. A rating of 0 is assigned to asbestos cement board and a rating of 100 is assigned to untreated red oak flooring. Flame spread ratings of various species of untreated lumber range from 60 to 230. A flame spread index of 25 meets Class A requirements.

During this test, smoke emissions are also measured and ratings are assigned on the same scale.

In the tunnel test, wood is placed over a burner shooting a 4.5-foot flame along the underside of the wood. Flame spread and smoke development ratings are established during the first 10 minutes. However, unlike the test for fire retardant coatings, building codes require that the usual 10-minute test be extended to 30 minutes and the flame spread not progress more than 10.5 feet beyond the burners. To qualify, FRT wood may show no evidence of progressive combustion.

Dricon® FRT wood has a flame spread and smoke developed index of 25 or less when tested in the tunnel test and shows no evidence of progressive combustion in 30 minutes. The Dricon® treatment reduces the flame spread of most species to less than 15, which is essentially the same as gypsum wallboard.

Standard tests for surface burning characteristics of materials referenced in the model codes as a basis of acceptance of fire retardant treated wood are all essentially the same:

- UL 723-Standard Test Method for Surface Burning Characteristics of Building Materials was developed by Underwriters Laboratories Inc., and subsequently adopted by ASTM as Standard E 84.
- ASTM E 84-Standard Test Method for Surface Burning Characteristics of Building Materials is essentially the same as UL 723. It also has been adopted by ANSI.
- NFPA 255-Method of Test for Surface Burning Characteristics of Building Materials is essentially the same as UL 723 and ASTM E 84.
- UBC Standard 8-1 Test Method for Surface-Burning Characteristics of Building Materials is based on Standard Test Method ASTM E 84.

Factory Mutual Research has also evaluated Dricon® FRT wood and found that it meets their requirements for a Class 1 treated wood roof deck per their FMRC calorimeter. The ASTM E 162 radiant panel test and NFPA 258 smoke density test have been conducted by the Hardwood Plywood Manufacturers Association and have demonstrated the acceptability of Dricon® FRT wood under Department of Transportation regulations for use in mass transit vehicles.

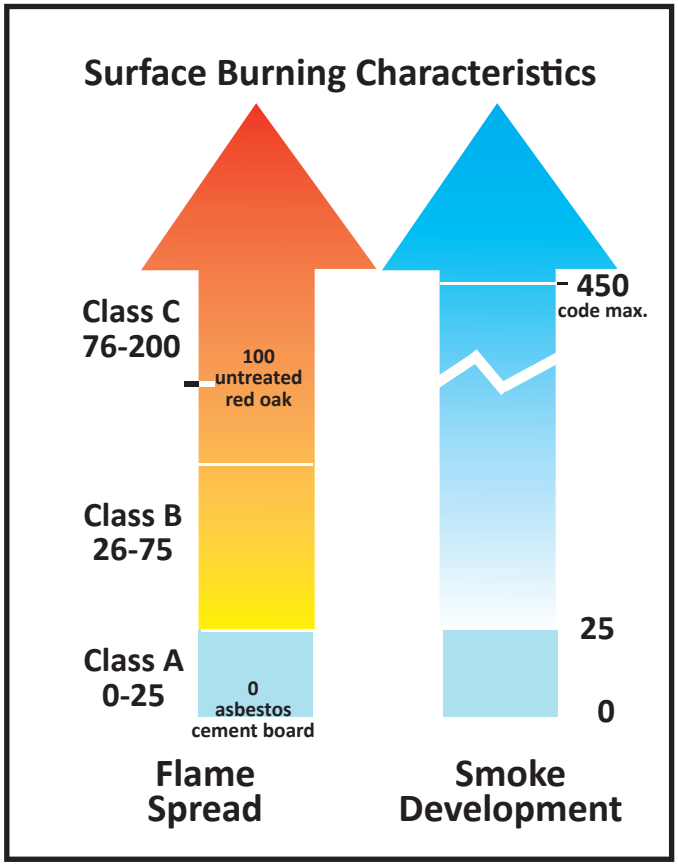

Various species of Dricon® FRT wood have values of 25 or less for flame spread and smoke development in a 10-minute tunnel test, plus no evidence of progressive burning when the test is extended to 30 minutes.

Tests

Dricon® FRT wood has been tested in accordance with the following procedures:

- ASTM D 1413
- ASTM D 3201
- ASTM D 3345
- ASTM D 5516
- ASTM D 5664
- ASTM E 84
- ASTM E 162
- ASTM E 72
- Boeing BSS 7239
- MIL-L-19140
- NFPA 255
- NFPA 258
- NFPA 259
- UL 723



Fire Resistance

Hourly Ratings

Fire retardant treated wood has a surface burning classification and, by itself, does not have a resistance rating in hours any greater than untreated wood. Fire ratings in hours are assigned to door, wall, or deck assemblies, following testing in accordance with ASTM E 119 and E 136. References such as the Underwriters Laboratories "Fire Resistance Directory" specifically point out that FRT wood may be substituted for untreated wood in any rated assembly. Dricon® FRT wood can be used as a component of such assemblies in structures where the code does not permit the use of untreated wood.

Descriptions of fire resistance rated assemblies incorporating structural lumber are listed in several publications, with the following being those generally referenced in model building codes:

- Fire Resistance Directory, published by Underwriters Laboratories
- Fire Resistance Ratings, published by Engineering and Safety Service of the American Insurance Service Group
- Fire Resistance Design Manual, published by the Gypsum Association

For example, the Gypsum Association's "Fire Resistance Design Manual" shows a one hour wall or partition assembly (WP 3605) that has wood studs covered by 5/8" Type X gypsum board with specified nailing and positioning of the panels. This assembly could be used for interior, non-bearing partitions, requiring a one hour rating in a noncombustible structure if the studs were Dricon® FRT wood. In a similar manner, by substituting Dricon® FRT wood for untreated wood, other one and two hour wall and ceiling assemblies can be used in noncombustible type buildings. The model codes also permit use of ceiling assemblies with the top membrane omitted where only unused attic space is above.

Some model codes and local building officials will accept the Component Additive Method (CAM) for calculating fire resistance in lieu of actual assembly testing. The CAM concept entails adding the resistance rating of individual components to qualify the resistance rating of the assembly. See next page for an example.

The lumber and plywood used in rated assemblies or CAM listings are usually not identified as being untreated or FRT wood, but the model codes generally do require that any wood used in noncombustible types of construction be fire retardant treated.

Also, due to wood's natural ability to insulate, wood may be more acceptable than unprotected steel in fire resistant assemblies.

Calculating Hourly Ratings

For more information on CAM, see next page or contact the American Forest and Paper Association and ask for the brochure, "Component Additive Method (CAM) for Calculating and Demonstrating Assembly Fire Endurance," Publication T-20 (www.awc.org/Publications/dca/dca4/DCA4.pdf), or contact Lonza Wood Protection.

One Hour Wood Truss Assemblies

Recent testing has provided effective and competitive designs for one hour rated floor/ceiling and roof/ceiling metal-plate-connected wood trusses. Unlike earlier designs, the one hour rating can now be achieved with only one layer of 5/8" Type X gypsum wallboard applied directly to the bottom chord of the truss.

Dricon® FRT wood can be used in place of untreated wood in many of these designs and will enable the use of these assemblies in many building construction types that do not permit untreated wood. These new construction assemblies provide greater savings than ever before when Dricon® wood construction is substituting for hourly rated steel or concrete construction.

FIRE PERFORMANCE

continued

Calculating Fire Resistance Ratings

One method for deriving fire resistance ratings while avoiding expensive fire testing of countless assembly variations is the "Component Additive Method." Also known as CAM, this methodology was developed in the 1960s and has since become familiar and acceptable to many code officials.

How CAM Works

Review of existing fire testing reports resulted in CAM's "10 Rules" methodology, which combines the resistance ratings of individual components to obtain the fire resistance rating of the assembly.

Substitution of Values for Untreated Wood

Though values commonly cited for wood components in listed assemblies are typically for untreated wood, it is not normally acceptable to use untreated wood in buildings that require noncombustible construction. Therefore, in many instances, Dricon® FRT wood can be substituted to meet the requirements specified by the CAM, or in specific assemblies described in popular industry sources, such as the Gypsum Association's Fire Resistance Design Manual and the U.S. Department of Agriculture's Wood Handbook.

Using CAM to Compute an Hourly Rating

The following illustrates how the CAM method is used to calculate an hourly rating in an assembly using: 5/8" Dricon® FRT plywood, 2x4 studs 16" on center, and rockwool or slag mineral wool batts. (Note: Listed values for untreated wood are applied to Dricon® FRT wood in this example.) This example, and use of CAM calculations in general, depends on acceptance by code officials with applicable authority. Check with appropriate agency before beginning construction.

Component	Time/Min.
Dricon® studs 16" on center	20
5/8" Dricon® plywood - Interior	15
Rockwool or slag mineral wool batts weighing not less than 1/4 lb./sq. ft. of wall surface	15
1/2" gypsum board	15
Assembly Total	**1 hour 5 minutes**

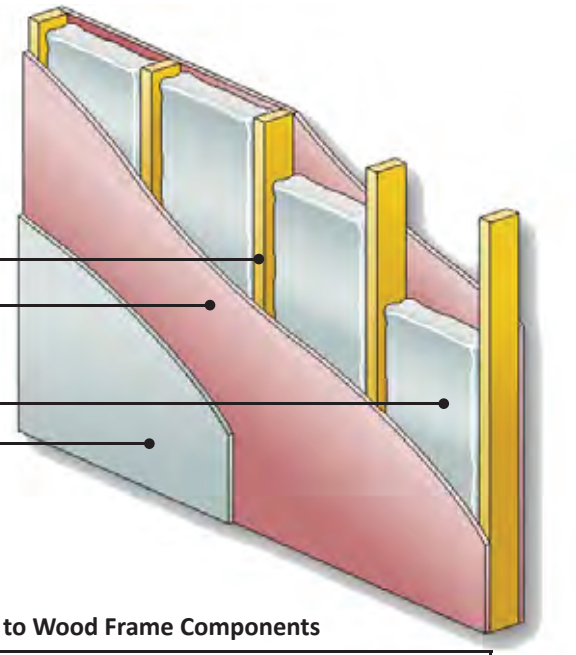

By adding the values shown in the Tables below, you can compute the fire resistance rating of an assembly.

Time Assigned to Protective Membranes

Description of Finish	Time/Min.
3/8" Douglas Fir plywood, phenolic bonded	5
1/2" Douglas Fir plywood, phenolic bonded	10
5/8" Douglas Fir plywood, phenolic bonded	15
3/8" gypsum board	10
1/2" gypsum board	15
5/8" gypsum board	20
1/2" Type X gypsum board	25
5/8" Type X gypsum board	40
Double 3/8" gypsum board	25
1/2" + 3/8" gypsum board	35
Double 1/2" gypsum board	40

Time Assigned to Wood Frame Components

Description of Frames	Time/Min.
Wood studs, 16" on center	20
Wood joists, 16" on center	10
Wood roof and floor truss assemblies, 24"on center	5

Time Assigned for Additional Protection

Description of Additional Protection	Time/Min.
Wood stud walls: Rockwool or slag mineral wool batts weighing not less than 1/4 lb./sq. ft. of wall surface	15
Non load bearing wood stud walls: Glass fiber batts weighing not less than 1/4 lb./sq. ft. of wall surface	5

Source: National Forest Products Association Design for Code Acceptance: CAM Method for Calculating and Demonstrating Assembly Fire Endurance.

STRENGTH PROPERTIES

For many years, design values for FRT wood have been adjusted generically from values for untreated wood to allow for the reduction in strength caused by the treating and kiln drying process.

These traditional strength adjustments are no longer applicable. Lonza Wood Protection, manufacturer of Dricon® fire retardant chemical, has thoroughly evaluated the strength properties of Dricon® FRT wood including high temperature exposures (in accordance with ASTM D 5664 and D 5516) that may occur during the life of a structure, and provides recommended strength value adjustments on behalf of all licensed producers of Dricon® fire retardant treated wood products.

Racking shear wall tests (ASTM E 72) indicate that maximum loads and deflections for Dricon® FRT plywood and untreated plywood panels are of the same magnitude and shape, but values for the Dricon® FRT panels are approximately 10% less on average.

Always check applicable local codes to insure acceptability.

The design values shown below are based on unincised wood. Several species of Dricon® FRT wood are commonly incised prior to treatment. In applications where strength is critical, use only unincised lumber and apply the appropriate design factors.

Strength Design Factors for Dricon® FRT Lumber Compared to Untreated Lumber Applicable at Service Temperatures Up to 100° F (38° C)

Strength Design Factors	Tested Species			Other Species
	Southern Pine	Douglas Fir	Spruce	
Compression Parallel, F_c	0.94	0.91	0.95	0.91
Horizontal Shear	0.95	0.94	0.95	0.94
Tension Parallel	0.92	0.87	0.98	0.87
Bending: Modulus of Elasticity, E	0.98	0.98	0.98	0.98
Extreme Fiber Stress, F_b	0.89	0.90	0.98	0.89

Strength Design Factors for Dricon® Fire Retardant Treated Lumber Compared to Untreated Lumber Applicable at Service Temperatures Up to 150° F (66° C)

	Tested Species									Other Species		
	Southern Pine Climate Zone			Douglas Fir Climate Zone			Spruce Climate Zone			Climate Zone		
Strength Design Factors	1A	1B	2	1A	1B	2	1A	1B	2	1A	1B	2
Compression Parallel, F_c	0.87	0.89	0.91	0.84	0.86	0.88	0.87	0.89	0.91	0.84	0.86	0.88
Horizontal Shear	0.87	0.89	0.91	0.86	0.88	0.90	0.87	0.89	0.91	0.86	0.88	0.90
Tension Parallel	0.87	0.89	0.91	0.82	0.84	0.86	0.87	0.89	0.91	0.82	0.84	0.86
Bending: Modulus of Elasticity, E	0.94	0.95	0.96	0.94	0.95	0.96	0.94	0.95	0.96	0.94	0.95	0.96
Extreme Fiber Stress, F_b	0.87	0.89	0.91	0.87	0.89	0.91	0.87	0.89	0.91	0.87	0.89	0.91

Climate Zone definitions:

1. Minimum design roof load or maximum ground snow load up to 20 psf
   A. Southwest Arizona, Southeast Nevada (Las Vegas-Yuma-Phoenix-Tucson triangle)
   B. All other qualifying areas of the continental United States
2. Minimum ground snow load over 20 psf

STRENGTH PROPERTIES

continued

Total Allowable Loads and Spans for Dricon® FRT Plywood Compared to Untreated Plywood Applicable at Service Temperatures Up to 170° F (77° C)						
Plywood Panel Thickness	Untreated Span Rating Roof/Subfloor	Dricon® Roof Sheathing Max. Live Load (psf)				Dricon® Subfloor Span Rating (inches)
			Climate Zone			
		Span (inches)	1A	1b	2	
5/16	12/0	12	69	93	126	0
5/16, 3/8	16/0	16	39	52	71	0
5/16, 3/8	20/0	20	25	33	45	0
3/8, 1/2	24/0	24	27	36	49	0
15/32, 1/2	32/16	24	38	51	70	16
19/32, 5/8	32/16	24	60	80	109	16
19/32, 5/8	32/16	32	34	45	61	16
23/32, 3/4	48/24	32	43	57	77	24
7/8	–	48	24	32	43	–
11/8	–	48	40	53	73	48

Climate Zone definitions:

1. Minimum design roof load or maximum ground snow load up to 20 psf
   A. Southwest Arizona, Southeast Nevada (Las Vegas-Yuma-Phoenix-Tucson triangle)
   B. All other qualifying areas of the continental United States
2. Minimum ground snow load over 20 psf

Notes:

1. Lonza Wood Protection does not recommend 5/16 or 3/8" panel thicknesses for roofing applications.
2. The loads shown are based on the most common one- and two-span conditions with strength axis perpendicular to supports. Other condition-load combinations exist. Consult with Arch for the allowable loads for those combinations.
3. The total allowable load (as shown above) is the sum of the live and dead loads. Dead loads should be subtracted from the above values to determine the live load. Dead loads typically range from 8-10 psf.
4. Allowable loads apply only to performance-rated plywood for Structural 1, Exposure 1 or Exterior, unsanded and treated with Dricon® fire retardant according to AWPA standards.
5. Subfloor applications are limited to 100 psf maximum live load.
6. Deflection of roof sheathing tabulated at maximum live load is less than 1/240 of the span, and under maximum live load plus dead load is less than 1/180 of the span.
7. 19/32 and 5/8" thick plywood shall be limited to performance-rated 4 or 5 ply plywood. 23/32 and 3/4" thick shall be limited to performance-rated 5 or 7 ply.
8. Gluelines shall be exterior and face plies shall be Group 1.
9. Panel edge support shall be required for roof sheathing. Panel edge clips when used shall be installed as follows: one midway between supports for 24-inch and 32-inch spans, two at 1/3 points between supports for 48-inch span.

ADDITIONAL INFORMATION

How Dricon® FRT Wood Is Made...

Wood is pressure-impregnated with Dricon® FR chemical at a properly equipped, licensed pressure-treating plant. Following treatment, Dricon® FRT wood is re-dried to a moisture content of 19% or less for lumber and 15% or less for plywood in accordance with current AWPA standards. Drying after treatment to these levels is required to comply with the model building codes.

Recognition

Dricon® fire retardant or Dricon® FRT wood complies with or has been granted the following:

- AWPA T1 Section 8.8
- AWPA P49 (FR-1), P25 (SBX)
- AWPA U1 (UC1, UC2, UCFA) and former C9, C20, C27, C31
- Flame spread and smoke development rating of 25 or less
- Class A FRT wood
- UL Recognized Component
- NFPA 703, 101 Life Safety Code
- ICC-ES ESR-1626
- EPA registration (62190-9)
- NYC MEA 199-81-M, NYC MEA 200-81-M
- Factory Mutual Class 1 Roof Deck
- City of Los Angeles (RR 25122)
- FHA Minimum Property Standard #2600
- HUD Materials Release (1261)
- ASTM D 5516 & D 5664
- MIL-L-19140 Qualified Products List
- National Building Code of Canada
- Truss warranty program with Structural Building Component Association

(All are subject to revision, re-examination)

Sources

This wood is available, either in stock or by special order, from thousands of building material outlets. To locate a producer near you, contact Lonza Wood Protection at 1-866-USE-FRTW or see www.dricon.com for a list of approved licensed producers.

Available Products

All common sizes of most construction species of lumber and plywood can be treated with Dricon® fire retardant. Size is generally limited only to the treating plant's ability to treat, dry, and handle large members. Western red cedar and red oak are limited to a maximum of 4/4" (1") while yellow poplar is limited to 8/4" (2") maximum thickness.

All thicknesses of plywood can be treated. However, to be covered by the warranties, sheets must be qualifying plywood at least 7/16" thick with at least 4 plies.

Engineered wood products, such as laminated veneer lumber (LVL) and glue-laminated lumber, are also available in some areas. In addition, an FRT wood backing system for steel studs is also made from Dricon® FRT wood. See Danback™ backers, page 25.

Treatment Depletion

Dricon® FRT wood is designed for above-ground applications, shielded from precipitation and direct wetting. In such locations, where the chemicals will not leach, the fire retardant chemicals are stable and will remain effective for the life of the structure.

Testing has demonstrated that short term exposure to the elements during a typical construction period will not adversely affect the fire retardant performance of Dricon® FRT wood. However, all unnecessary exposure should be avoided. FRT wood on the job site should be stored off the ground and protected from the weather. Dricon® FRT wood is suitable for use as plate stock.



ADDITIONAL INFORMATION

continued



Warranties

Lonza Wood Protection offers builders a 40-year limited warranty against heat degradation for Dricon® FRT wood in roofing systems. This warranty provides for repair and replacement of the roof system should Dricon® FRT wood degrade structurally due to heat and/or humidity exposure for up to 40 years. The warranty is non-prorated and requires only that roofs be built to the requirements (including proper ventilation and end use) of the building code having jurisdiction. The warranty resides with the builder, relieving the building owner, architect, and dealer of warranty responsibilities. Builders need only register with Lonza Wood Protection once and build by the terms of the warranty.

Also available is a 40-year preservative limited warranty for building owners. This warranty covers structural failure due to damage by Formosan termites, subterranean termites, and/or fungal decay, and applies to southern pine lumber & plywood and Douglas fir plywood.

In addition, truss manufacturers can enroll for a 10-year limited warranty on truss lumber as well as for the 40-year roofing system warranty. This program was developed in association with the Wood Truss Council of the Structural Building Components Association.

Details are available from licensed producers, at www.dricon.com, or at 1-866-USE-FRTW (873-3789).

Quality Control

Comprehensive QC programs, conducted by third-party agencies, provide assurance that both Dricon® fire retardant chemical and Dricon® FRT wood are consistently produced to meet performance standards. Independent agencies, such as Timber Products Inspection, supplement the daily activities of the chemical manufacturer, Lonza Wood Protection.

Species

Only species that have been tested and are noted here are available.

Lumber

- Douglas Fir
- Southern Pine
- Ponderosa Pine
- Spruce/Pine/Fir
- Hemlock
- Red Pine
- Yellow Poplar*
- Redwood
- Hem/Fir
- White Pine
- Red Oak*
- Spruce
- True Firs
- Western Red Cedar*

** Millwork Species*

Plywood

- Spruce/Pine/Fir
- Douglas Fir
- Southern Pine
- Redwood
- Lauan

Preservative Properties

In addition to excellent fire retardant characteristics, Dricon® fire retardant treated wood effectively resists attack by termites and decay in above-ground, weather-protected use. This includes studs, flooring, joists, trusses, sill plates, interior trim, and other applications not exposed to direct wetting.

Dricon® fire retardant chemical is registered for use as a wood preservative with the U.S. Environmental Protection Agency. Some species of Dricon® FRT wood also meet the requirements of AWPA Standard U1 Commodity Specifications A (sawn products) and F (plywood), which means that this wood effectively withstands damage from decay and termites in appropriate applications.

The preservative effectiveness of treated wood is dependent on the retention and penetration of the treating chemicals.

Tests have shown that, at the retention levels present in most species, Dricon® FRT wood is protected against damage from even the Formosan termite. Dricon® FRT wood, processed to standards, will meet retention requirements for protection against subterranean and Formosan termites as established by the AWPA (0.28 pcf B_2O_3) in standard P25 under Inorganic Boron, SBX.

Appearance

Deposits of Dricon® FR solution may appear on the surface of wood ("efflorescence") or exude from the edges of plywood during drying ("intumescence"). This is a result of injection of adequate chemical to achieve desired fire protection, and is considered normal. On most species, discoloration is barely noticeable, however redwood lumber may darken and Douglas Fir may yellow. Grain raising will also occur occasionally.

Marks made by stickers, used to separate the layers of lumber during the kiln drying following treatment, will be noticeable on lumber. For structural use, this is not objectionable. The pressure treatment and subsequent drying may result in a slight waviness in plywood; for normal applications this is not objectionable as the plywood can be straightened when nailing.

Dricon® FRT wood can be special-ordered with the good face free of sticker marks, providing the thickness of the plywood is not more than 5/8". Slight irregular water marks may at times show on such material.

Also, Dricon® FRT wood will not stain plaster, wallboard, or other covering material. Dricon® FRT lumber is supplied at a moisture content of 19% or less (15% or less for plywood).

When used as recommended, the excellent hygroscopic properties of Dricon® FRT wood will prevent any staining problems.

Where high-appearance natural wood surfaces are desirable, as in large assembly areas such as courtrooms, most codes will allow 1/28" untreated veneer over Dricon® FRT wood without declassifying the finished product.

Green Building

Featuring the significant environmental benefits of wood itself (see back cover), Dricon® FRT products can be produced using wood from certified forests. Typically this requires a special order from sources with chain-of-custody certification.

The Dricon® fire retardant does not contain urea formaldehyde and does not increase or decrease the emission of volatile organic compounds (VOCs) once pressure-impregnated into the lumber or plywood. Plywood commonly incorporates phenolic (not urea) formaldehyde in the adhesive between plies.

Dricon® chemical consists of 70% guanylurea phosphate (fire retardant) and 30% boric acid (preservative). Neither the formulation nor the treated wood is not considered a hazardous material.

Limitations

Dricon® FRT wood can only be used in above-ground locations, protected from precipitation, regular condensation, or other wetting. Exposure of Dricon® treated wood to these conditions will, over a period of time, reduce its fire retardance and preservative effectiveness. However, Dricon® FRT wood used as sill plate or in contact with concrete that contacts the ground is an approved application and does not void the warranties.



ADDITIONAL INFORMATION

continued

Hygroscopicity

A material which gains moisture from the atmosphere as the relative humidity increases is said to be *hygroscopic.* The more hygroscopic a material is, the more moisture it will pick up during periods of high humidity. Wood is naturally hygroscopic, and fire retardants can increase this property from very little to significantly. Thus, there is no such thing as non-hygroscopic FRT wood. Fire retardants which absorb excessive moisture can create problems with appearance, surface finishing, and corrosion of metal hardware.

The American Wood Protection Association standards differentiate between "low-hygroscopic" Type A products and other more hygroscopic Type B products. Type A products must remain at or below the fiber saturation point of wood (28% moisture content) when conditioned at 92% relative humidity and 80° F. Furthermore, Type A products are differentiated by their intended application, i.e., Type A high temperature (HT) and Type A low temperature (LT). Dricon® FRT wood is listed as an interior Type A (HT) product by AWPA.

In tests conducted in accordance with ASTM D 3201, there was very little difference between the moisture content of Dricon® FRT wood and untreated wood. Even when the relative humidity was increased from the specified test level of 90% up to 96%, the difference remained slight. By comparison, typical conventionally treated samples had twice the moisture gain of untreated wood even below 85% relative humidity.

Corrosion

Corrosion is the tendency of a material to oxidize by chemical reaction. This process occurs more rapidly at higher moisture and temperature levels. *Dricon® FRT wood, however, has demonstrated no greater corrosion rates than untreated wood.*

Accelerated tests following procedures of military specification MIL-L-19140 have demonstrated Dricon® FRT wood to be no more corrosive to various metals than untreated wood. Dricon® samples were tested in contact with aluminum, carbon steel, hot-dipped galvanized steel, copper, and red brass.

Other tests have demonstrated that Dricon® treatment may actually help reduce corrosion of the protective zinc layer on galvanized steel truss plates. If the exposure is such that moisture might condense between wood and the metal hardware, siding, or roofing, corrosion can be expected with either treated or untreated wood. Even with untreated wood, this type of environment requires back priming with a corrosion inhibitive paint on the surface of the metal in contact with the wood or use of a moisture barrier. The same precautions should be taken when using Dricon® FRT wood.

Corrosion of Metals in Contact with Dricon® FRT Wood

Corrosion rate in mils per year

Test: MIL-L-19140 120°F at 90% RH

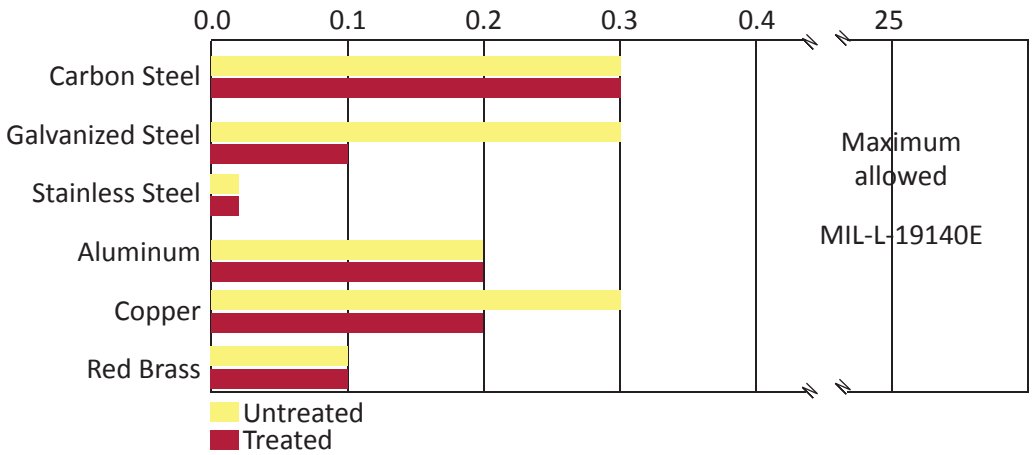

Results are average corrosion rates of metals in contact with southern pine, Douglas fir, and spruce wood blocks.

Safety Precautions

The chemicals in Dricon® FRT wood are of very low toxicity and will not harm those involved in use and handling of the product. The same common sense precautions should be taken when handling Dricon® wood as with untreated wood or other building materials. Dust masks and eye protection devices are recommended to avoid possible irritation from sawdust and wood chips. Gloves will help avoid splinters. Hands should be washed after doing construction work.

Tips on Use

Proper handling procedures should be followed when using Dricon® lumber and plywood.

- Dricon® wood should not be installed where it will be exposed to precipitation, direct wetting, or regular condensation, or in contact with the ground.
- When storing Dricon® wood, the material should be kept off the ground and covered to shield it from precipitation.
- When installing Dricon® FRT lumber and plywood it is important to utilize the design value adjustments published in ESR-1626 and this handbook.
- Dricon® plywood should be spaced and fastened as recommended in "APA Engineered Wood Construction Guide" (Form E30), published by APA-The Engineered Wood Association.
- Normal carpentry practices are applicable. End cutting, drilling, joining, and light surface sanding will not significantly reduce the benefits of the Dricon® treatment. It is not necessary to field-treat cut ends to maintain flame spread rating. Ripping or milling of lumber is not permitted, except on red oak and yellow poplar lumber, since this may alter the burning characteristics and invalidate the Underwriters Laboratories flame spread classification. Surfacing to a depth of 1/16" is permitted on western red cedar lumber.
- Unlike FRT lumber, Dricon® *plywood* can be cut in either direction without loss of fire protection; surface burning characteristics of plywood are unchanged.
- Carbide-tipped saw blades are recommended if extensive cutting operations are to be performed. However, Dricon® FRT wood is not as abrasive as many conventional fire retardants.
- When painting or staining, the paint or stain manufacturer's recommendations should be followed. As with untreated lumber, the surface should be clean and dry.
- Do not burn treated wood.
- Do not use pressure-treated chips or sawdust as mulch.
- Dispose of treated wood in accordance with local, state and federal regulations.

Fastener Design Values

Dricon® FRT wood has recommended fastener design value adjustments based on full size independent testing completed at Virginia Polytechnic Institute. The adjustments for lateral and withdrawal loading of nailed, screwed, and bolted joints range from 0 to 8 percent reduction. FRT wood is not as abrasive as many conventional fire retardants.

Fastener Design Value Factors
Dricon® FRT Lumber Compared to Untreated Lumber

Fasteners/Connectors		Southern Pine	Douglas Fir	Spruce	Other Species
Nails	Withdrawl	0.91	0.91	1.0	0.91
	Lateral	0.98	0.98	1.0	0.98
Wood Screws	Withdrawl	0.94	0.94	1.0	0.94
Bolted Joints	Parallel to Grain	0.92	0.92	1.0	0.92
	Perpendicular to Grain	0.96	0.96	1.0	0.96

Recommended Hardware

Galvanized steel hardware is recommended — not required— for use with Dricon® FRT wood. Please reference national and local building codes for compliance measures. Although Dricon® treatment does not increase corrosion of bare or galvanized steel, the galvanizing provides an extra measure of protection with any treated wood.

Disposal

Under the Resource Conservation and Recovery Act (RCRA), it is the responsibility of the user of the product to determine, at the time of disposal, whether the product meets RCRA criteria for hazardous waste. This product is typically not considered a hazardous waste but state-run waste programs may be more stringent. Check with your local or state regulators prior to disposal.

Finishing

Stains, sealers, varnishes, and paints can be used with Dricon® FRT wood. Paint systems may be water- or oil-based. Stains, especially dark colored semi-transparent types, should be solvent-based to avoid possible surface crystallization of the fire retardant chemical. Flammability of finish should be considered prior to application. A light sanding and thorough wiping should be performed prior to the application of any finish to provide a clean surface and to smooth any raised grain. In the case of rough sawn lumber or textured plywood, brush the surface prior to staining.

Take precautions at the job site to protect the treated product from exposure to rain or extreme dampness if finishes are to be applied. As with untreated wood, excessive surface moisture can cause finishing problems. It is recommended that finishes be tested in an unobtrusive area to insure satisfaction.

Normal marking from treatment will show unless surface preparation prior to finishing is conducted. When clear or semi-transparent finishes are to be used, take careful note of the appearance characteristics of Dricon® FRT wood.

Gluing

The Dricon® treatment does not adversely affect the performance of nonstructural construction adhesives, mastics, or contact cements. No significant differences in effectiveness between Dricon® FRT wood and untreated wood have been found.

Some types of isocyanate and urethane adhesives have been found to perform well. In any type of gluing, and especially in structural applications, an evaluation should be made of the specific adhesive and materials to be glued. Be sure the Dricon® wood surface is clean and dry to obtain the best performance.

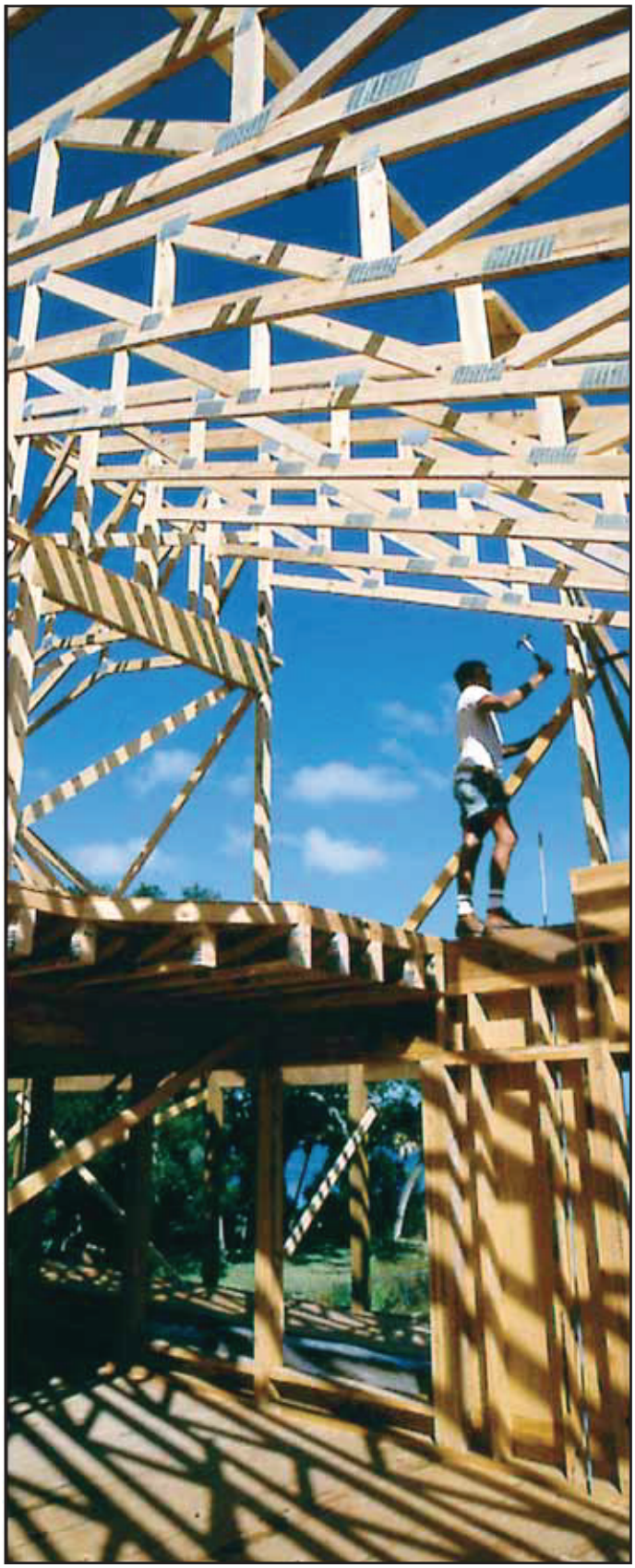

Standards of the American Wood Protection Association



The American Wood Protection Association (AWPA) is the principal standards-writing body for the wood preserving industry in the United States. AWPA standards help ensure that treated wood products perform satisfactorily for their intended use. AWPA standards include Preservative Standards (P), which detail specifications for all AWPA-accepted wood preservatives and fire retardants, and User Specifications (U), which contain treatment specifications for different commodities and have replaced the former Commodity Standards (C).

AWPA Use Category System

The Use Category System (UCS) was developed as a format revision for the Commodity Standards and is not intended to make substantive technical changes to those standards. Detailed specifications for fire retardant treated wood are found in U1 Commodity Specification H.

The UCS includes:

- Definitions of the Use Categories
- Service conditions
- Treated wood use selection guide
- List of AWPA accepted preservative and fire retardant systems
- Guide to Use Categories
- Appendices relating to specific product types, e.g., sawn products, poles, FRT wood

AWPA Recognition of Dricon® FRT Wood

Dricon® FR chemicals and Dricon® FRT wood are acceptable under AWPA's P and U standards. As the AWPA does not permit the listing of trade names, Dricon® FR chemical is listed as "FR-1" in standard P49 for fire retardant formulations.

Dricon® FR chemical and Dricon® FRT wood are also recognized as an effective preservative system for above ground, weather-protected applications. As such, Dricon® fire retardant is also listed as an inorganic borate preservative and meets the requirements of AWPA standard P25, Waterborne Preservatives (section 9), and Dricon® FRT wood satisfies UC1 and UC2. For preservative applications, Dricon® FR and FRT wood are designated as "SBX" in the P and U standards.

Introduction to Building Codes

Building codes regulate the construction of buildings and structures by establishing minimum requirements to ensure public safety, health, and welfare.

An authority having jurisdiction (AHJ), such as a township, county, or state, may have a proprietary building code prepared, or it may adopt and/or adapt one of the major model building codes.

The model codes themselves were kept up to date by the authoring agencies through periodic supplements and revisions. Supplements and/or revisions do not automatically become part of a code as adopted or adapted by an authority having jurisdiction except by specific legal action. Thus, even if a new edition of a given model code is available, the edition in force may be a different one.

Generally, code requirements are subject to rather narrow and literal interpretations; that is, a particular provision under one set of conditions may not apply to another set of conditions.

The full text of a particular code should in all instances be used in making the final decision on the use of fire retardant treated wood or any other material or assembly.

Fire Retardant Treated Wood

The uses for fire retardant treated wood as an alternative to noncombustible materials are specifically noted in the model building codes, which have been included in this brochure.

The codes classify materials into these categories:

- Noncombustible materials which are thus by nature, and those qualifying under a referenced standard for noncombustibility, such as ASTM E 136-Test Method for Behavior of Materials in a Vertical Tube Furnace at 750°C.
- Combustible materials are those that do not qualify for a noncombustible rating.

In general, the codes permit the use of fire retardant treated wood in specific components and/or locations as an alternate for noncombustible materials in cases when combustible materials including untreated wood are not permitted.

Identification

The model building codes require that every piece of FRT wood bear the identification mark of an approved inspection agency.

PROCESS STANDARD D-1
MONITORED BY:
TIMBER PRODUCTS INSPECTION

SYP TREATED PLYWOOD
FLAMESPREAD / SMOKE DEVELOPED
25 OR LESS
ASTM E 84 / AWPA U1, UCFA
INTERIOR TYPE A (HT) / KDAT
ESR-1626

DRICON
Fire Retardant Treated Wood

COMPANY NAME
CITY, STATE
2011 / 2012

Sample ink stamp



Each piece of Dricon® FRT wood is marked with an ink stamp bearing the classification mark of a qualified testing laboratory, categorizing its surface burning (flame spread and smoke developed) characteristics. The mark further identifies the name and location of the treating plant and shows that the material complies with AWPA standards, has been dried after treatment, and qualifies as an Interior Type A, low hygroscopic product.

Evaluation Report Acceptance

In Evaluation Report ESR-1626, ICC Evaluation Service found that Dricon® fire retardant treated wood complies with requirements for fire retardant treated wood described in the International Building Code® and International Residential Code®, subject to the "Conditions of Use" listed there. Evaluation reports provide guidance to code officials faced with approving the use of products under these codes.

Standard, Uniform, National, CABO, NBC Codes

The ICC and NFPA codes, outlined in the sections ahead, are the national model codes that undergo regular revision. Many jurisdictions, however, may still refer to past editions of SBCCI's Standard, ICBO's Uniform, or BOCA's National code. Information on FRT wood in these codes – and in the CABO One and Two Family Dwelling Code and National Building Code of Canada – can be found at www.dricon.com.

INTERNATIONAL BUILDING CODE®

2009 Edition, published by the International Code Council®

Uses

1. Noncombustible Type Construction - Untreated wood is not permitted. Fire-retardant-treated (FRT) wood may be used in specific instances.

Criteria

- Fire-retardant-treated-wood is any wood product which, when impregnated with chemicals by a pressure process or other means during manufacture, shall have, when tested in accordance with ASTM E 84 or UL 723, a listed flame spread index of 25 or less and show no evidence of significant progressive combustion when the test is continued for an additional 20-minute period. Additionally, the flame front shall not progress more than 10.5 feet (3200 mm) beyond the centerline of the burners at any time during the test. {Ref.: IBC Section 2303.2}
- All fire-retardant-treated lumber and wood structural panel products shall be properly labeled with the identifying mark of an approved testing agency, identification of the treating manufacturer, name of fire-retardant treatment, wood species treated, flame spread and smoke developed index, drying method used after treatment and conformance with appropriate standards as required by Section 2303.2.4. For fire-retardant-treated wood exposed to weather, damp or wet locations, include the words "No increase in the listed classification when subjected to the Standard Rain Test" (ASTM D 2898). {Ref.: IBC Section 2303.2.6}
- Design values for untreated lumber and wood structural panels shall be adjusted for strength for fire-retardant-treated wood. Design value adjustments shall be based on an approved investigation method that considers the effect of the anticipated temperature and humidity that the fire-retardant wood will be exposed to and the type of treatment and re-drying procedures used. {Ref.: IBC Section 2303.2.2}
    1. Fire-retardant-treated wood structural panels (softwood plywood) shall meet the requirements of ASTM D 5516 and ASTM D 6305 where applicable. Each manufacturer shall publish the allowable maximum loads and spans for floor and roof sheathing for its treatment. {Ref. IBC Section 2303.2.5.1}
    2. Fire-retardant-treated lumber shall meet the requirements of ASTM D 5664 for each species of wood treated. Each manufacturer shall publish the modification factors for service at temperature of not less than 80° F and for roof framing. The roof framing modification factors shall take in consideration the climatological location. {Ref. IBC Section 2303.2.5.2}
- Interior applications of fire-retardant-treated wood shall be marked "Type A" and not have a moisture content greater than 28 percent when tested using ASTM D 3201 procedures at 92 percent relative humidity. {Ref.: IBC Section 2303.2.7}
- Prior to use fire-retardant-treated wood shall be dried to a moisture content of 19 percent or less for lumber and 15 percent or less for wood structural panels. Wood kiln dried after treatment (KDAT) shall not exceed the kiln or drying temperatures used previously to dry the lumber and plywood. {Ref.: IBC Section 2303.2.8}
- Buildings of Type I and II construction have limited applications for fire-retardant-treated wood as required by IBC Section 603.1. {Ref.: IBC Section 2303.2.9}
- Fasteners for fire-retardant-treated wood shall be in accordance with manufacturer's recommendations. In the absence of manufacturer's recommendations, Section 2303.9.5.3 shall apply – hot-dipped zinc-coated galvanized steel, stainless steel, silicon bronze or copper. {Ref.: IBC Section 2303.9.5.4}

Not all FRT wood products perform alike.
See strength properties of Dricon® FRT wood on pages 7 and 8.

International Code Council, International Building Code, International Residential Code, and *International Mechanical Code* are registered trademarks of International Code Council.

Applications

Type I and Type II Construction

Fire-retardant-treated wood is permitted in Type I and II construction in the following applications:

1. Non-load bearing partitions rated 2 hours or less. {Ref.: IBC Section 603.1, exception 25.1}
2. Non-load bearing exterior walls where no fire rating is required. {Ref.: IBC Section 603.1, exception 25.2; see also IBC Table 602}

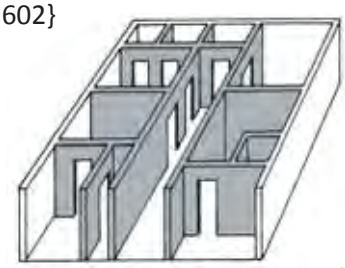

Note: Shaded areas indicate permitted uses of FRT wood.

3. Roof construction as permitted in Table 601, Note b. {Ref.: IBC Section 603.1, exception 25.3}
4. Partitions separating the interior areas of stores, offices or similar spaces occupied by a single tenant may be constructed of fire-retardant-treated wood, 1 hour fire-rated construction or of wood panels or similar light construction up to 6 feet in height provided the partitions do not form an enclosed corridor with an occupant load of 30 or more. {Ref.: IBC Section 603.1, Item 10}
5. Materials in concealed spaces are permitted in accordance with Section 717.5. {Ref.: IBC Section 603.1, Item 23}
6. Materials exposed within plenums complying with Section 602 of the International Mechanical Code (IMC). {Ref.: IBC Section 603.1, Item 24}

Type III Construction

Fire-retardant-treated wood complying with Section 2303.2 shall be permitted for use as a substitute for noncombustible materials in exterior wall assemblies with a 2-hour fire resistance rating or less. {Ref.: IBC Section 602.3}

Type IV Construction (Heavy timber, HT)

Fire-retardant-treated wood complying with Section 2303.2 shall be permitted for use as a substitute for noncombustible materials in exterior wall assemblies with a 2-hour fire resistance rating or less. {Ref.: IBC Section 602.4}

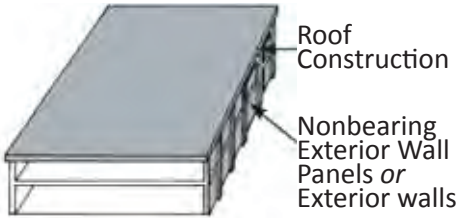

Type V Construction

Structural elements, exterior walls and interior walls may be constructed of any materials permitted by the code, both combustible and noncombustible. {Ref.: IBC Section 602.5}

Exterior Walls and Roofs

Exterior nonbearing walls or wall panels and gable ends of roofs may be of noncombustible materials or fire-retardant-treated wood when the horizontal fire separation distance is more than 30 feet for all construction types and group designations. For horizontal fire separation distances less than 30 feet, refer to Table 602 for the fire resistance rating requirements of exterior walls based on the type of construction and group designation. {Ref.: IBC Table 601, footnote f}

Roof Construction

Roof construction, including supporting beams and joists, may be constructed using fire-retardant-treated wood as follows:

1. Except in Factory-Industrial (F-1), Hazardous (H), Mercantile (M) and Moderate-Hazard Storage (S-1) occupancies, fire protection of structural members shall not be required, including protection of roof framing and decking where every part of the roof construction is 20 feet or more above any floor immediately below. Fire-retardant-treated wood members shall be allowed to be used for such unprotected members. {Ref. IBC Table 601, footnote b}
2. In Type I and II construction, fire-retardant-treated wood is allowed in buildings including girders and trusses as part of the roof construction when the building is:
    a) Two stories or less in height. {Ref.: IBC Table 601 footnote b}
    b) Type II construction over two stories; or {Ref.: IBC Table 601 footnote b}
    c) Type I construction over two stories in height and the vertical distance from the upper floor to the roof is 20 feet or more. {Ref.: IBC Table 601 footnote b}

Parapets and Fire Wall Extensions

A. Parapets shall be provided on buildings and have the same fire-resistance rating as that required for the supporting wall, and on any side adjacent to a roof surface, and shall have a noncombustible face for the uppermost 18 inches including counter flashing and coping materials. The height of the parapet shall be shall not be less than 30 inches above the point where the roof surface and wall intersect except that in Type III, IV and V construction of Residential Groups R-2 and R-3 as applicable per IBC Section 101.2, a parapet is not required on an exterior building wall when the wall is terminated at the roof sheathing or deck that is constructed of fire-retardant treated wood for a distance of 4 feet continuously on both sides of the exterior wall intersection and the roof covering is Class C minimum. {Ref.: IBC Section 705.11.5.1}

Note for IBC Residential Group R-3: Detached one and two family dwellings (duplexes) and multiple single-family dwellings (town houses) separated a 2-hour fire-rated wall with a separate means of egress and not more than 3 stories in height shall comply with the International Residential Code (IRC). {Ref.: IBC Section 101.2}

B. Fire walls shall extend from the foundation to a termination point at least 30 inches above both adjacent roofs, except that in buildings of Types III, IV and V construction, walls shall be permitted to terminate at the underside of fire-retardant treated wood within 4 feet of each side of the fire wall where both buildings are provided with not less than a Class B roof covering. {IBC Section 706.6, exception 4.3}

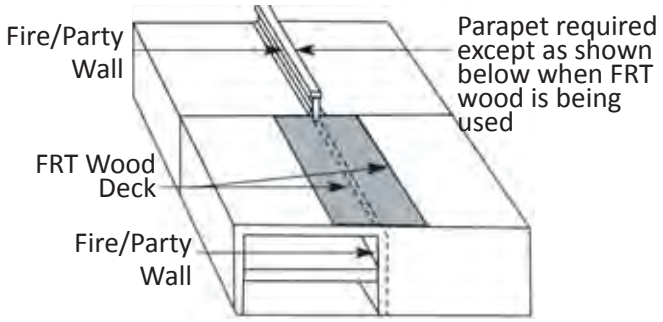

Miscellaneous Roof Structures

Towers, spires, domes and cupolas shall be not be less than the fire-resistance rating required for the building where attached and shall not be used for habitation or storage, except that:

- Any tower, spire, steeple or other roof structure not used for habitation or storage shall be unlimited in height if of noncombustible materials and shall not extend more than 20 feet above the allowable height if of combustible materials. {Ref.: IBC Section 504.3}
- Any tower, spire, dome or cupola greater than 85 feet in height above the roof or greater than 200 square feet at any horizontal section, or which are used for any purpose other than a belfry or architectural embellishment, shall be constructed of and supported by Type 1 and II construction. {Ref.: IBC Section 1509.5}
- Any tower, spire, dome or cupola greater than 60 feet in height above the roof or greater than 200 square feet at any horizontal section, or which are used for any purpose other than a belfry or architectural embellishment, shall be constructed of and supported by noncombustible materials. Enclosed towers and spires shall have exterior walls and roofs of the same construction as required for the building walls and roofs. {Ref.: IBC Section 1509.5.1}
- Enclosed towers and spires such as church spires and other towers and spires of a similar nature shall have exterior walls and roof coverings as required for the main building to which they are attached. {Ref.: Section 1509.5.2}
- Penthouses complying with applicable provisions shall be considered as a portion of the story below, and shall be constructed with walls, floors and roof as required for the building. {Ref.: IBC Section 1509.2; see exceptions at 1509.2.4}

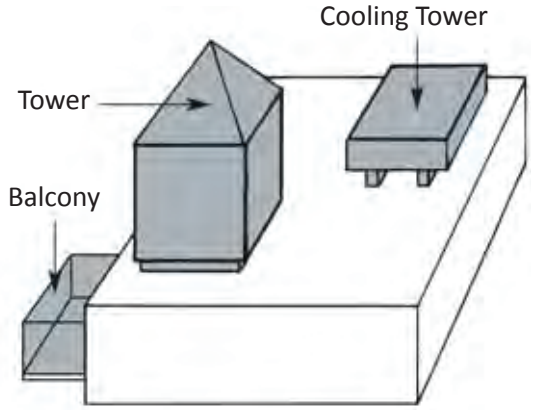

Cooling Towers

Non-load bearing framing of cooling towers greater than 250 square feet in base area or greater than 15 feet high and that do not exceed one-third of the supporting roof area in buildings greater than 50 feet in height may be of noncombustible construction. {Ref.: IBC Section 1509.4}

Balconies and Similar Projections

Balconies and similar projections of floors may be constructed of fire-retardant-treated wood in accordance with IBC Chapter 14. {Ref.: IBC Section 603.1, Note 12} The aggregate length of balconies and similar projections on each floor cannot exceed 50% of the building perimeter unless the balcony areas are protected by fire sprinklers. {Ref.: IBC Section 1406.3}

1. In Type I and II construction, balconies, porches, decks and exterior stairways not used as required exits on buildings that are not more than 3 stories in height are permitted to be constructed of fire-retardant-treated wood. {Ref.: IBC Section 1406.3, exception 1}
2. In Type III, IV and V construction, balconies and similar appendages that are not protected by a sprinkler system may be constructed of fire-retardant-treated wood. {Ref.: IBC Section 1406.3, exception 3}

Bay Windows and Oriel Windows

Bay windows and oriel windows in Type I, II, III and IV construction on buildings that are not more that 3 stories in height are permitted to be constructed using fire-retardant-treated wood. {Ref.: IBC Section 1406.4}

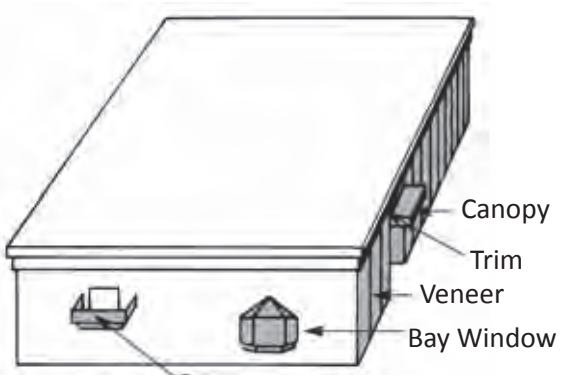

Awnings and Canopies

- Awnings may have frames of noncombustible material, fire-retardant-treated wood, wood of Type IV size, or 1-hour construction with combustible or noncombustible covers and shall be either, fixed, retractable, folding or collapsible. {Ref.: IBC Section 3105.3}
- Canopies shall be constructed of a rigid framework with an approved covering that is flame resistant in accordance with NFPA 701 or has a flame spread index not greater than 25 when tested in accordance with ASTM E 84 or UL 723. {Ref.: IBC Section 3105.4}
- Permanent canopies are permitted to extend over adjacent open spaces provided: 1) the canopy and its supports are of noncombustible material, fire-retardant-treated wood, Type IV construction or of 1-hour fire- resistance-rated construction; 2) any canopy covering, other than textiles, shall have a flame spread index not greater that 25 when tested in accordance with ASTM E 84 or UL 723 in the form intended for use; 3) the canopy shall have at least one long side open; 4) the canopy width does not exceed 15 feet; and 5) the fire rating of exterior walls is not reduced. {Ref.: IBC Appendix D102.2.8}

Service Stations

Canopies under which fuels are dispensed shall have a clear, unobstructed height of not less than 13 feet 6 inches (4115 mm) to the lowest projecting element in the vehicle drive-through area. Canopies and their supports over pumps shall be of noncombustible materials, fire-retardant-treated wood complying with Chapter 23, wood of Type IV sizes or of construction providing 1-hour fire resistance. {Ref.: IBC Section 406.5.3}

Kiosks in Covered Malls

Kiosks and similar structures (temporary or permanent) are permitted within a mall if constructed of fire retardant treated wood complying with Section 2303.2. Kiosks cannot exceed 300 square feet (28 m^2) in area, must be provided with approved fire suppression and detection devices and the horizonal separation between kiosks or kiosk groupings and other structures must be at least 20 feet (6096 mm). {Ref.: IBC Section 402.11}

Interior Finishes

Interior wall and ceiling finishes shall be classified by their flame spread and smoke-developed indexes in accordance with ASTM E 84. Such interior finish materials shall be grouped in the following classes in accordance with their flame spread and smoke-developed index as follows {Ref.: IBC Section 803.1}

Class A: flame spread 0-25; smoke-developed 0-450
Class B: flame spread 26-75; smoke-developed 0-450
Class C: flame spread 76-200; smoke-developed 0-450
Except materials, other than textiles, tested in accordance with Section 803.1.2.

- Interior walls and ceiling finish shall have a flame spread index no greater than that specified in Table 803.5 for the occupancy group and location designated. {Ref.: IBC Section 803.9}

- Where walls and ceilings are required to be fire-rated or of noncombustible construction, the interior finish material shall be applied directly to such construction or to furring strips not more than.1-3/4 inches from such surfaces. {Ref.: IBC Section 803.11.1}
- Any hangers and assembly members of such dropped ceilings that are set-out (furred) below the main ceiling line shall be of noncombustible materials, except that in Type III and V construction, fire-retardant-treated wood is permitted. {Ref. IBC Section 803.11.2}

Permanent Platforms

In Type I, II, and IV construction, permanent platforms are permitted to be constructed of fire-retardant-treated wood where the platforms are ore than 30 inches above ain floor, are not more than -third of the room floor area nd are not more than 3,000 square feet in area. Where the space beneath the permanent platform is used for storage or any purpose other than equipment, wiring or plumbing, the floor construction shall not be less than 1- hour fire-resistant construction. Where the space beneath the permanent platform is used only for equipment, wiring or plumbing, the underside of the permanent platform need not be protected. Permanent platforms shall be constructed of materials as required for the type of construction of the building in which the permanent platform is located. {Ref.: IBC Section 410.4}

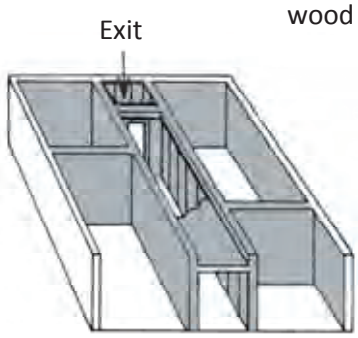

Combustibles in Concealed Spaces

Combustibles shall not be permitted in concealed spaces of buildings of Type I or II construction, except:

1. Fire-retardant-treated wood complying with Section 603, Item 8. {Ref.: IBC Section 717.5, Item 1}
2. Combustible materials complying with Section 602 of the International Mechanical Code (IMC). {Ref.: IBC 717.5, Item 2}
3. Class A interior finish materials. {Ref.: IBC Section 717.5, Item 3}

Note: Dricon® fire retardant treated wood is listed as "Interior Type A, high temperature (HT)" in accordance with AWPA UCFA for lumber and plywood.{Ref.: See Fire Performance section of this Application Guide} Common features of both:

1. 12" concrete block for bearing walls
2. 2' x 4' mineral fiber acoustic tile in exposed grid suspension system for ceilings
3. 4" concrete slab on grade for floor
4. Same floor-to-finished-ceiling height

Design Considerations

Savings Using Fire Retardant Treated Wood Trusses in Lieu of Steel Bar Joists.

Two roof assemblies for the same basic one-story light commercial building are compared; both should be classified as Type II construction according to the provisions of the International Building Code (IBC). {Ref.: IBC Sections 602.1 and 602.2, Table 601}

System A — Roof assembly with steel bar joists

1. Roofing membrane: 4-ply built-up, grave surfaced
2. Insulation: 2-1/2" urethane with R=20
3. Metal roof deck: 1-1/2" deep, 22 gauge, galvanized
4. Steel bar joists: 24LH04 at 5'-0" on centers

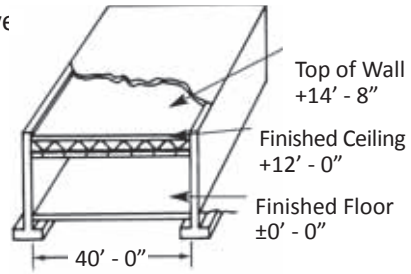

System B — Roof assembly with FRT wood trusses

1. Roofing: Inorganic asphalt shingles over No. 15 felt underlayment
2. One layer of 1/2" thic FRT plywood sheathir
3. Light wood trusses of fire retardant treated lumber at 2'-0" on centers
4. Foil faced glass fiber insulation between trusses: 6" thick with R=19

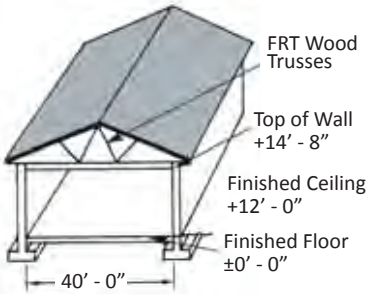

Average cost of assembly B is about 5 percent less than assembly A, which does not include further savings for reduction in height of exterior walls while maintaining same finished-floor-to-ceiling height.

Advantages of System A over System B:

1. Venting of ceiling plenum not required
2. Extent of any required fire rated partition for tenant separation is less above finished ceiling

Advantages of System B over System A:

1. Lower cost of roof assembly
2. Exterior walls 2 feet lower
3. Positive roof drainage, less possibility of leakage
4. Less expensive roof drainage system
5. HVAC ducts may be run within truss space

INTERNATIONAL RESIDENTIAL CODE®

2009 Edition, published by the International Code Council

Uses

1. Combustible Type Construction: Untreated wood is permitted. Fire-retardant-treated (FRT) wood may be used in specific instances.

Criteria

- The provisions for fire-retardant-treated wood in the International Residential Code (IRC) specifically apply to the design and construction of roof-ceiling systems as required by Section.R801. {Ref.: IRC Section R801.1.3}
- All fire-retardant-treated lumber and wood structural panel products shall be properly identified by a grade mark of an approved agency complying with DOC PS 20. A certificate of inspection issued by a lumber grading or inspection agency shall be accepted in lieu of a grade mark. {Ref.: IRC Section R802.1}
- Fire-retardant-treated wood is any wood product which, when impregnated with chemicals by a pressure process or other means during manufacture, shall have, when tested in accordance with ASTM E 84, a listed flame spread index of 25 or less and shows no evidence of significant progressive combustion when the test is continued for an additional 20-minute period. In addition, the flame front shall not progress more than 10.5 feet (3200 mm) beyond the centerline of the burners at any time during the test. {Ref.: IRC Section R802.1.3}
- Fire-retardant-treated lumber and wood structural panels shall be properly labeled to include the identification mark of an approved agency, treating manufacturer, name of fire-retardant treatment, wood species, flame spread and smoke developed rating, and method of drying after treatment, and must conform to any ASTM standards required. Fire-retardant-treated wood exposed to weather, damp or wet locations shall state "No increase in the listed classification when subjected to the Standard Rain Test" (ASTM D 2898). {Ref.: IRC Section R802.1.3.4}
- Design values for untreated lumber and wood structural panels shall be adjusted for strength taking into consideration the effect of the anticipated temperature and humidity exposure, method of treatment and re-drying procedures in accordance with ASTM D 5516 and ASTM D 5564. {Ref.: IRC Section R802.1.3.5}
- The effect of treatment, re-drying method after treatment, exposure to high temperature and high humidity exposure on the flexure properties of fire-retardant-treated softwood plywood shall be determined in accordance with ASTM D 5516. Wood structural panels shall be adjusted for maximum loads and spans, or both for untreated plywood design values in accordance with ASTM D 6305. Manufacturers must publish the allowable maximum loads and spans for service as floor and roof sheathing for their treatment. {Ref.: IRC Section R802.1.3.5.1}
- The effect of treatment, re-drying method after treatment, exposure to high temperature and high humidity exposure on the allowable design properties of fire-retardant-treated lumber shall be determined in accordance with ASTM D 5664. Each manufacturer shall publish the modification factors for service at temperatures of not less than 80°F (26°C) and for roof framing. The modification factors for roof framing shall take in consideration the climatologic location. {Ref.: IRC Section R802.1.3.5.2}
- Any fire-retardant-treated wood products exposed to the weather, damp or wet locations shall be identified as "Exterior" and "No increase in the listed classification when subjected to Standard Rain Test," indicating the listed flame spread classification has not increased when subjected to ASTM D 2898. {Ref.: IRC Section R802.1.3.6}
- Interior applications of fire-retardant treated wood shall be marked "Type A" and not have a moisture content greater than 28 percent at 92 percent relative humidity when tested using ASTM D 3201 procedures. {Ref.: IRC Section R802.1.3.7}
- Prior to use fire-retardant-treated wood shall be dried to a moisture content of 19 percent or less for lumber and 15 percent or less for wood structural panels. Wood kiln dried after treatment (KDAT) shall not exceed the kiln or drying temperatures used previously to dry the lumber and plywood. {Ref.: IRC Section R802.1.3.8}
- Fasteners for fire-retardant treated wood used in interior locations shall be in accordance with the manufacturer's recommendations. In the absence of the manufacturer's recommendations, Section R317.3.3 for exterior and wet or damp locations shall apply – hot-dipped zinc-coated galvanized steel, stainless steel, silicon bronze or copper, and for fasteners other than nails and timber rivets, mechanically deposited zinc-coated steel with coating weights in accordance with ASTM B 695, Class 55 minimum. {Ref.: IRC Section 317.3.4}

Applications

Dwelling Unit Separation

A. Parapets constructed in accordance with Section R302.2.3 shall be constructed for townhouses as an extension of exterior walls or common walls. Where roof surfaces adjacent to the wall or walls are at the same elevation, the parapet shall extend not less than 30 inches (762 mm) above the roof surfaces. Where roof surfaces adjacent to the wall or walls are at different elevations and the higher roof is not more than 30 inches (762 mm) above the lower roof, the parapet shall extend not less than 30 inches (762 mm) above the lower roof surface.

A parapet is not required when the roof is covered with a minimum class C roof covering, and the roof decking or sheathing is of noncombustible materials or approved fire-retardant-treated wood for a distance of 4 feet (1219 mm) on each side of the wall or walls, or one layer of 5/8-inch (15.9 mm) Type X gypsum board is installed directly beneath the roof decking or sheathing, supported by a minimum of nominal 2-inch (51 mm) ledgers attached to the sides of the roof framing members, for a minimum distance of 4 feet (1219 mm) on each side of the wall or walls. {Ref.: IRC Section R302.2.2}

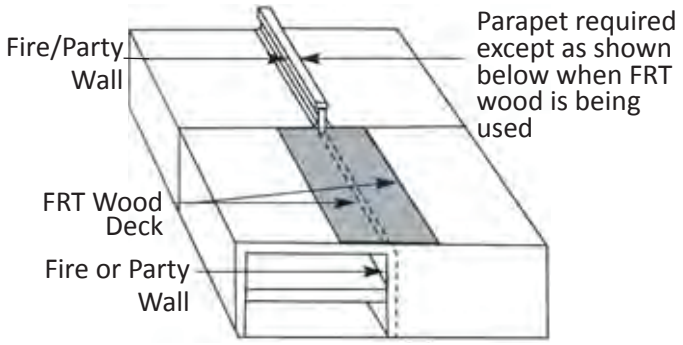

B. Walls that separate dwelling units in two-family dwellings (duplexes) shall be separated from each other by wall and/or floor assemblies having not less than 1-hour fire-resistance rating tested in accordance with ASTM E 119. Fire-resistance-rated floor-ceiling and wall assemblies shall extend to and be tight against the exterior wall, and wall assemblies shall extend to the underside of the roof sheathing except that a fire resistance rating of 1/2 hour shall be permitted in buildings equipped throughout with an automatic sprinkler system installed in accordance with NFPA 13. {Ref.: IRC Section R302.2.3}

- When floor assemblies are required to be fire resistance rated by Section R317.1, the supporting construction of such assemblies shall have an equal or greater fire resistive rating. {Ref.: IRC Section R302.3.1}
- Fire-retardant-treated plywood equivalent to 1/2 inch gypsum board may be used to construct the access doors of folding pull down stairs installed in the garage ceiling assembly upon approval by the local building official or authority having jurisdiction.
- Fire-retardant-treated plywood equivalent to 1/2 inch gypsum board applied to the garage side may be used upon approval by the building official or authority having jurisdiction.

Roof-mounted collectors

The roof shall be constructed to support the loads imposed by roof-mounted solar collectors. Roof-mounted solar collectors that serve as a roof covering shall conform to the requirements for roof coverings in Chapter 9 of the IRC code. Where mounted on or above the roof coverings, the collectors and supporting structure shall be constructed of noncombusitble materials or fire retardant treated wood equivalent to that required for the roof construction. {Ref. IRC Section M2301.2.2}

INTERNATIONAL MECHANICAL CODE®

2003 Edition, published by International Code Council

Plenums

1. Any materials exposed within an enclosed plenum shall comply with the requirements of the International Mechanical Code (IMC) Section 602. {Ref.: IMC Section 603.1, Note 22}
2. Any materials left exposed within an enclosed plenum located above a ceiling, below the floor, uninhabited crawl spaces, attic spaces or mechanical rooms shall be noncombustible or have a flame spread index of not more than 25 and a smoke-developed index of not more than 50 when tested in accordance with ASTM E 84. Note: ASTM E 84 is only tested for 10 minutes of duration during the flame spread. {Ref. IMC Section 602.2.1}

Nonmetallic Ducts

Nonmetallic ducts shall be constructed with Class 0 or Class 1 duct material in accordance with UL 181. Class 1 indicates a flame spread index not greater than 25 and a smoke-developed index of not greater than 50, when tested to ASTM E 84. {Ref.: IMC Section 603.4}

NFPA 101-Life Safety Code

Published by National Fire Protection Association

Fire retardant treated wood is not specifically included in the code. Requirements for Class A interior finish specify a flame spread rating value of 0-25 and smoke developed of 450 or less — requirements which would be met by fire retardant treated wood. FRT wood booths are permitted in new assembly buildings (see chapter 8) and existing assembly buildings (see chapter 9).

NFPA 703-Standard for Fire Retardant Impregnated Wood

1. Fire retardant treated wood shall be defined as any wood product which, when impregnated with chemicals by a pressure process, or other means during manufacture, shall have, when tested in accordance with ASTM E 84-Standard Test Method for Surface Burning Characteristics of Building Materials, a flame spread index of 25 or less and show no evidence of significant progressive combustion when the test is continued for an additional 20 minute period. In addition, the flame front shall not progress more than 10.5 feet beyond the center line of the burner at any time during the test.
2. All fire retardant treated wood shall bear an identification mark showing the flame spread classification there of, issued by an approved agency having a re-examination service.
3. Where fire retardant treated wood is exposed to the weather, it shall be further identified to indicate that there is no increase in the listed flame spread classification as defined in Item 1 when subjected to ASTM D 2898-Standard Method for Accelerated Weathering of Fire Retardant Treated Wood for Fire Testing.
4. Where experience has demonstrated a specific need for use of material of low hygroscopicity, fire retardant treated wood to be subjected to high humidity conditions shall be identified to indicate that the treated wood has a moisture content of not over 28 percent when tested in accordance with ASTM D 3201-Test Method for Hygroscopic Properties of Fire-Retardant Wood and Wood-Base Products procedures at 92 percent relative humidity and 80 degrees F.
5. Fire retardant treated wood shall be dried to a moisture content of 19 percent or less for lumber and 15 percent or less for plywood before use.

Note: Even though all fire retardant treated structural lumber and plywood, to be thus classified, must meet fire retardancy requirements of Item 1 above, other properties – such as strength, resistance to heat degradation, hygroscopicity – will vary between similar products of different manufacturers depending on the specific, proprietary treatment. Therefore, the use of an "or equal" clause is not appropriate when specifying fire retardant treated wood.

Specifications for fire retardant treated wood should therefore include:

- Definition of all significant properties, or
- Listing of all acceptable manufacturers and/or products

Sprinklers not needed in some concealed spaces

Section 8.15.1.2.11 of the NFPA 13 Standard, 2009 Edition: "Concealed spaces in which the exposed materials are constructed entirely of fire-retardant treated wood as defined by NFPA 703, Standard for Fire Retardant Impregnated Wood and Fire Retardant Coatings for Building Materials, shall not require sprinkler protection."

Dricon® FRT wood complies with NFPA 703, and thus eliminates the need for sprinklers in these spaces. This saves time for the builder and expense for his client, and it avoids the consequences of an accidental sprinkler activation.

Danback™ Flexible Wood Backing System




SNAP the Starter Edge into the open side of the flange


FLEX around stud flange using the flexible connector plate


SCREW each plate to the stud flange using two small pan or wafer head screws


It's that simple to reduce installation time by up to 90%

It's convenient. It's code compliant. It reduces backing installation time by 90%. And contractors love it. Backing steel studs for the attachment of cabinets, fixtures, and handrails has always been difficult, costly and time-consuming. The patented Danback™ flexible wood backer flexes around the stud and snaps in place for a snug fit without cutting, routing, or notching.

As an added benefit, the wood portion is made with Dricon® FRT wood to impart fire resistance. The heavy-duty Danback™ flexible wood backing system can support handrails, shelves, and other wall fixtures. It's so easy, you'll see immediate savings in installation time.

Product Features

1. Used as backing plate for the attachment of fixtures in conjunction with metal stud walls.
2. Available in 48" sections, for 16" and 24" O.C. framing.
3. Meets all light gauge framing specifications for commercial and residential applications.
4. Reduces installation time up to 90%.
5. Provides extra screw pull-out strength for heavy-duty backing applications for hospitals, clinics, nursing homes, assisted living centers, institutional, and residential construction.
6. Made with code-compliant, Class A Dricon® fire retardant treated wood.

For pricing and availability on both of these products, contact Lonza Wood Protection at 1-866-USE-FRTW.

FRX® Exterior Fire Retardant Wood



FRX® wood is pressure-treated lumber and plywood that is chemically treated to reduce the spread of flames and provide tested fire protection for applications directly exposed to weather. FRX® wood may be substituted for materials classified as noncombustible in certain building types designated by the model building codes and requiring ASTM D 2898 conformance.

FRX® wood combines the beauty and versatility of wood with the fire safety and insurance advantages of noncombustible materials.

Typical Exterior Uses

- Wall coverings
- Stairways
- Sheds
- Roof coverings
- Canopies and awnings
- Eaves, soffits and fascia
- Scaffolding and scaffold planks
- Various residential uses such as stairways, porches, siding, shakes and shingles, and trim and molding
- Decks & balconies
- Fences
- Gazebos
- Open-air roof systems
- Storefronts and facades
- Agricultural buildings and horse stalls
- Construction staging

Other Products in the Wolmanized® Wood Family

Lonza Wood Protection produces wood preservatives and additives that enhance the qualities of wood by pressure treatment processing. It licenses of these respected brands of treated wood:

Wolmanized® Residential Outdoor® Wood
www.WolmanizedWood.com

Preservative-treated wood commonly used for residential and commercial applications.

Wolmanized® Heavy-Duty™ Pressure-Treated Wood
www.WolmanizedWoodHD.com

Traditional treated wood for industrial, utility, highway, and marine applications.

FrameGuard® Total™ Mold-Resistant Wood
www.FrameGuardWood.com

Treated to resist mold, termites and fungal decay.

Wolmanized EraWood™ Lumber
www.WolmanizedWood.com/EraWood

Nonmetallic preservative-treated wood for above-ground applications.

It's Wood.

In addition to the treatments that enable the wood to last a long time or resist flames, our brands have all of the environmental and other advantages associated with wood itself. They extend forest resources; the source is a renewable resource grown on managed timberlands, requiring less energy to produce than alternative building materials and offering greater insulation value; trees absorb carbon dioxide and wood products sequester carbon, two features that reduce greenhouse gas; and, because of its lighter weight, wood can often be installed with lighter equipment having less environmental impact. Wood offers excellent workability with common construction skills and tools, plus it provides design flexibility and economy. Wood is generally less costly than alternative building materials and is considered easier to work with, and aesthetically preferable in many applications.

©2012 Arch Wood Protection, Inc., a Lonza company

DRI-2016-R13.1

DRICON®
FIRE RETARDANT TREATED WOOD

Meet fire codes and get the benefits of wood construction

Dricon® FRT lumber and plywood are chemically treated to reduce the spread of flames and generation of smoke

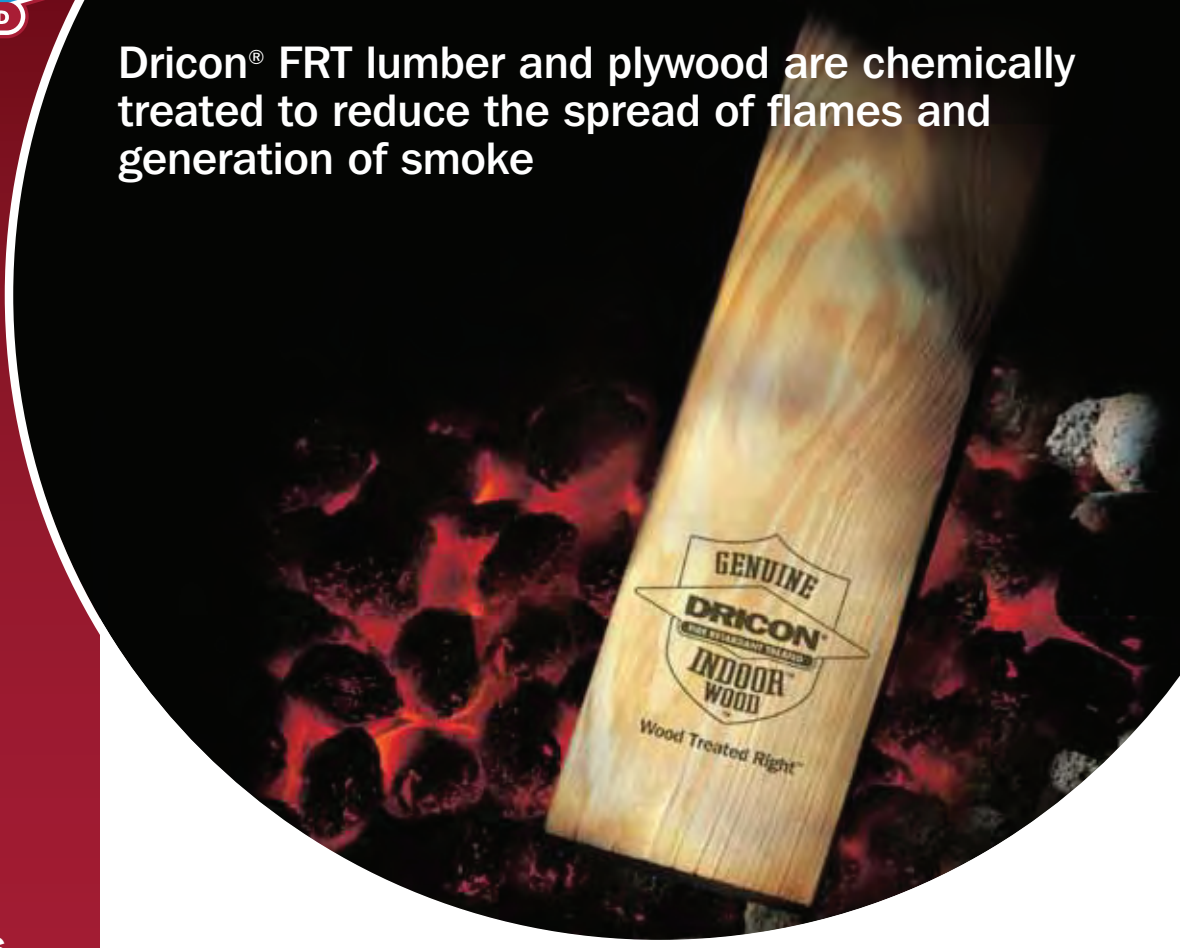

Complies with National Model Codes

40-Year Roof Warranty

40-Year Preservative Warranty

Truss Manufacturers Warranty

Meets Current AWPA Standards

EPA-Registered Protection Against Termites & Fungal Decay

Since 1981, Dricon® fire retardant treated (FRT) wood has performed as intended in countless structures around the world, providing a convenient and economical building alternative. Pressure-treated for protection in the event of a fire, Dricon® FRT wood will not promote flame spread, and generates less smoke, the #1 killer in fires. Model building codes permit Dricon® FRT wood as a substitute for materials classified as noncombustible in many applications. And Dricon® FRT wood offers a 40-year roof warranty that covers both materials and labor, plus a 40-year preservative warranty and warranty options for truss manufacturers.

Dricon® fire retardant or Dricon® FRT wood complies with or has been granted the following:
• AWPA UC1, UCFA • AWPA P49 (FR-1) • ICC-ES ESR-1626 • EPA Registration (62190-9)
• NYC MEA 199-81-M • NYC MEA 200-81-M • Factory Mutual Class I Roof Deck
• City of Los Angeles (RR 25122) • FHA Minimum Property Standard #2600
• HUD Materials Release (1261) • California State Fire Marshal • State of Wisconsin • QPL
All are subject to revision, reexamination.

www.dricon.com

©2011 Arch Wood Protection, Inc. DRI-2012-R4



Strength Design Factors for Dricon® Fire Retardant Treated Lumber Compared to Untreated Lumber Applicable at Service Temperatures Up to 150 F (66 C)

	Tested Species											
	Southern Pine Climate Zone			Douglas Fir Climate Zone			Spruce Climate Zone			Other Species Climate Zone		
Strength Design Factors	**1A**	**1B**	**2**	**1A**	**1B**	**2**	**1A**	**1B**	**2**	**1A**	**1B**	**2**
Compression Parallel, Fc	0.87	0.89	0.91	0.84	0.86	0.88	0.87	0.89	0.91	0.84	0.86	0.88
Horizontal Shear	0.87	0.89	0.91	0.86	0.88	0.90	0.87	0.89	0.91	0.86	0.88	0.90
Tension Parallel	0.87	0.89	0.91	0.82	0.84	0.86	0.87	0.89	0.91	0.82	0.84	0.86
Bending: Modulus of Elasticity, E	0.94	0.95	0.96	0.94	0.95	0.96	0.94	0.95	0.96	0.94	0.95	0.96
Extreme Fiber Stress, Fb	0.87	0.89	0.91	0.87	0.89	0.91	0.87	0.89	0.91	0.87	0.89	0.91

Strength Design Factors for Dricon® FRT Lumber Compared to Untreated Lumber Applicable at Service Temperatures Up to 100 F (38 C)

	Tested Species			Other Species
Strength Design Factors	**Southern Pine**	**Douglas Fir**	**Spruce**	
Compression Parallel, Fc	0.94	0.91	0.95	0.91
Horizontal Shear	0.95	0.94	0.95	0.94
Tension Parallel	0.92	0.87	0.98	0.87
Bending: Modulus of Elasticity, E	0.98	0.98	0.98	0.98
Extreme Fiber Stress, Fb	0.89	0.90	0.98	0.89

Total Allowable Loads and Spans for Dricon® FRT Plywood Compared to Untreated Plywood Applicable at Service Temperatures Up to 170 F (77 C)

Plywood Panel Thickness	Untreated Span Rating Roof/Subfloor	Dricon® Roof Sheathing Max. Live Load (psf)				Dricon® Subfloor Span Rating (inches)
		Span (inches)	Climate Zone 1A	1B	2	
5/16	12/0	12	69	93	126	0
5/16, 3/8	16/0	16	39	52	71	0
5/16, 3/8	20/0	20	25	33	45	0
3/8, 1/2	24/0	24	27	36	49	0
15/32, 1/2	32/16	24	38	51	70	16
19/32, 5/8	32/16	24	60	80	109	16
19/32, 5/8	32/16	32	34	45	61	16
23/32, 3/4	48/24	32	43	57	77	24
7/8	–	48	24	32	43	–
1 1/8	–	48	40	53	73	48

Climate Zone definitions

1 *Minimum design roof load or maximum ground snow load up to 20 psf*
- **A** *Southern Arizona, Southeast Nevada (Las Vegas-Yuma-Phoenix-Tucson triangle)*
- **B** *All other qualifying areas of the continental United States*

2 *Minimum ground snow load over 20 psf*

Here are some answers to frequently asked questions about Dricon® FRT wood:

Does it meet building codes? Yes. Dricon® FRT wood has been issued an evaluation report signifying compliance with model codes. It's also recognized by other US and international code and regulatory agencies.

Can it be painted or stained? Yes. Follow the same procedures you would for painting or staining untreated wood. However, flammability of the finish should be considered before application.

What species can be treated? There is a large variety of approved species such as Southern Yellow Pine, Doug Fir, SPF and Hem Fir. For more species details refer to the Dricon® FRT Application Guide.

Can Dricon® FRT wood be used outdoors? No. Dricon® FRT wood is intended only for above ground uses where it is kept away from direct moisture and shielded from weather. For exterior applications, use FRX® exterior FRT wood (see www.frxwood.com).

Is there a reduction in strength compared to untreated wood? Yes. The treating and drying processes cause a reduction in strength that varies with treatment, species of wood, applications and specific properties. Adjustment factors for Dricon® FRT wood are shown on this sheet.

What type of fasteners should be used with Dricon® FRT wood? Galvanized steel hardware is recommended. Although the Dricon® FR treatment does not increase the corrosion of bare steel, the galvanizing process provides an extra margin of safety.

Can I cut Dricon® FRT wood? Yes. Cutting lengths, drilling holes, and light sanding are permissible. It is not necessary to field-treat cut ends to maintain the flame spread rating. Most species of Dricon® FRT lumber should not be ripped or milled. Dricon® FRT plywood can be ripped or cross-cut.

Does Dricon® FRT wood have any special features? Dricon® FRT wood is pressure treated, backed by a 40 year warranty, and registered with the EPA for termite and decay resistance.

Tests: Dricon® FRT wood has been tested in accordance with the following procedures:
ASTM D 1413 • ASTM D 3201 • ASTM D 3345
ASTM D 5516 • ASTM D 5664 • ASTM E 84
ASTM E 162 • Boeing BSS 7239 • MIL-L-19140
NFPA 255 • NFPA 258 • NFPA 259 • UL 723
All are subject to revision, reexamination.

Use and Handling:
Dricon® FR treatment does not substantially change the physical characteristics of ordinary lumber. You should be aware of proper handling and personal hygiene practices, which are much the same as if you were using untreated wood. Keep the following guidelines in mind when using and handling Dricon® FRT wood:

1. Dricon® FRT wood should not be installed where it will be exposed to precipitation, direct moisture, or regular condensation.

2. Dricon® FRT wood should not be used in contact with the ground.

3. When storing Dricon® FRT wood, the material should be kept off the ground and covered to shield it from precipitation.

4. When painting or staining, the paint or stain manufacturer's recommendations should be followed. As with untreated lumber, the surface should be clean and dry.

5. The same common sense precautions should be taken when handling Dricon® FRT wood as with untreated wood or other building materials. Dust masks and eye protection devices are recommended to avoid possible irritation from sawdust and wood chips. Gloves will help avoid splinters. Hands should be washed after doing construction work.

MATERIAL SAFETY DATA SHEET
DRICON® FIRE RETARDANT TREATED WOOD
January 6, 2006

1. CHEMICAL PRODUCT AND COMPANY IDENTIFICATION

Product Identifier: Dricon® Fire Retardant Treated Wood
General Use: Treated Wood Products

MANUFACTURER: **TELEPHONE NUMBERS:**

2. COMPOSITION / INFORMATION ON INGREDIENTS

HAZARDOUS INGREDIENTS	PERCENT[1]	CAS #	EXPOSURE LIMITS (mg/m³)		
			OSHA-PEL	ACGIH-TLV	ACGIH-STEL
Boric Acid	<5	10043-35-3	NA	NA	NA
Guanylurea Phosphate	<10	17675-60-4	NA	NA	NA
Wood Dust[2]					
Western Red Cedar	>85	N/A	15(total) 5.0 (respirable)	0.5 (inhalable)	None
All other Species			15(total) 5.0 (respirable)	1.0 (inhalable)	
Formaldehyde[3]	<0.1	50-00-0	0.75ppm	0.37 (Ceiling)	2ppm

Notes: [1] Actual retention may vary due to differences in wood stock and treatment retention levels.
[2] A state-run OSHA program may have more stringent limits for wood dust and/or PNOR.
[3] Only applies to Plywood Products

3. HAZARDS IDENTIFICATION

Inhalation: Airborne treated or untreated wood dust may cause nose, throat or lung irritation. Various species of untreated wood dust can elicit allergic respiratory response in sensitized persons.
Eye Contact: Treated or untreated wood dust may cause mechanical irritation.
Skin Contact: Handling wood may result in skin exposure to splinters. Prolonged and/or repeated contact with treated or untreated wood dust may result in mild irritation. Various species of untreated wood dust can elicit allergic type skin irritation in sensitized persons.
Ingestion: Not anticipated to occur.
Chronic Wood Dust (treated or untreated) Effects: Wood dust, depending on species, may cause dermatitis on prolonged, repetitive contact; may cause respiratory sensitization and/or irritation.

4. FIRST AID MEASURES

Inhalation: Remove from wood dust exposure. If breathing has stopped administer artificial respiration. Seek medical aid if symptoms persist.
Eye Contact: Gently flush any particles from the eyes with large amounts of water for at least 15 minutes. DO NOT RUB THE EYES. Seek medical aid if irritation persists.
Skin Contact: Rinse wood dust off with water. DO NOT RUB. Once the skin is free of the wood dust, wash thoroughly with soap and water. Seek medical aid if severe irritation develops.
Ingestion: Rinse the victim's mouth out with water. Do not induce vomiting. If symptoms develop, call a physician.

5. FIRE FIGHTING MEASURES

Flash Point NA **Lower Explosive Limit** NA
Auto-ignition NA **Upper Explosive Limit** NA

Extinguishing Agents: Not applicable

MANUFACTURER: TELEPHONE NUMBERS:

2. COMPOSITION / INFORMATION ON INGREDIENTS

HAZARDOUS INGREDIENTS	PERCENT[1]	CAS #	EXPOSURE LIMITS (mg/m³)		
			OSHA-PEL	ACGIH-TLV	ACGIH-STEL
Boric Acid	<5	10043-35-3	NA	NA	NA
Guanylurea Phosphate	<10	17675-60-4	NA	NA	NA
Wood Dust[2] Western Red Cedar All other Species	>85	N/A	15(total) 5.0 (respirable) 15(total) 5.0 (respirable)	0.5 (inhalable) 1.0 (inhalable)	None
Formaldehyde[3]	<0.1	50-00-0	0.75ppm	0.37 (Ceiling)	2ppm

Notes: [1] Actual retention may vary due to differences in wood stock and treatment retention levels.
[2] A state-run OSHA program may have more stringent limits for wood dust and/or PNOR.
[3] Only applies to Plywood Products

3. HAZARDS IDENTIFICATION

Inhalation: Airborne treated or untreated wood dust may cause nose, throat or lung irritation. Various species of untreated wood dust can elicit allergic respiratory response in sensitized persons.
Eye Contact: Treated or untreated wood dust may cause mechanical irritation.
Skin Contact: Handling wood may result in skin exposure to splinters. Prolonged and/or repeated contact with treated or untreated wood dust may result in mild irritation. Various species of untreated wood dust can elicit allergic type skin irritation in sensitized persons.
Ingestion: Not anticipated to occur.
Chronic Wood Dust (treated or untreated) Effects: Wood dust, depending on species, may cause dermatitis on prolonged, repetitive contact; may cause respiratory sensitization and/or irritation.

4. FIRST AID MEASURES

Inhalation: Remove from wood dust exposure. If breathing has stopped administer artificial respiration. Seek medical aid if symptoms persist.
Eye Contact: Gently flush any particles from the eyes with large amounts of water for at least 15 minutes. DO NOT RUB THE EYES. Seek medical aid if irritation persists.
Skin Contact: Rinse wood dust off with water. DO NOT RUB. Once the skin is free of the wood dust, wash thoroughly with soap and water. Seek medical aid if severe irritation develops.
Ingestion: Rinse the victim's mouth out with water. Do not induce vomiting. If symptoms develop, call a physician.

5. FIRE FIGHTING MEASURES

Flash Point NA
Auto-ignition NA
Lower Explosive Limit NA
Upper Explosive Limit NA

Extinguishing Agents: Not applicable

MATERIAL SAFETY DATA SHEET
DRICON® FIRE RETARDANT TREATED WOOD
January 6, 2006

1. CHEMICAL PRODUCT AND COMPANY IDENTIFICATION

Product Identifier: Dricon® Fire Retardant Treated Wood
General Use: Treated Wood Products

MANUFACTURER:

TELEPHONE NUMBERS:

2. COMPOSITION / INFORMATION ON INGREDIENTS

HAZARDOUS INGREDIENTS	PERCENT[1]	CAS #	EXPOSURE LIMITS (mg/m³)		
			OSHA-PEL	ACGIH-TLV	ACGIH-STEL
Boric Acid	<5	10043-35-3	NA	NA	NA
Guanylurea Phosphate	<10	17675-60-4	NA	NA	NA
Wood Dust[2]					
Western Red Cedar	>85	N/A	15(total) 5.0 (respirable)	0.5 (inhalable)	None
All other Species			15(total) 5.0 (respirable)	1.0 (inhalable)	
Formaldehyde[3]	<0.1	50-00-0	0.75ppm	0.37 (Ceiling)	2ppm

Notes: [1] Actual retention may vary due to differences in wood stock and treatment retention levels.
[2] A state-run OSHA program may have more stringent limits for wood dust and/or PNOR.
[3] Only applies to Plywood Products

3. HAZARDS IDENTIFICATION

Inhalation: Airborne treated or untreated wood dust may cause nose, throat or lung irritation. Various species of untreated wood dust can elicit allergic respiratory response in sensitized persons.
Eye Contact: Treated or untreated wood dust may cause mechanical irritation.
Skin Contact: Handling wood may result in skin exposure to splinters. Prolonged and/or repeated contact with treated or untreated wood dust may result in mild irritation. Various species of untreated wood dust can elicit allergic type skin irritation in sensitized persons.
Ingestion: Not anticipated to occur.
Chronic Wood Dust (treated or untreated) Effects: Wood dust, depending on species, may cause dermatitis on prolonged, repetitive contact; may cause respiratory sensitization and/or irritation.

4. FIRST AID MEASURES

Inhalation: Remove from wood dust exposure. If breathing has stopped administer artificial respiration. Seek medical aid if symptoms persist.
Eye Contact: Gently flush any particles from the eyes with large amounts of water for at least 15 minutes. DO NOT RUB THE EYES. Seek medical aid if irritation persists.
Skin Contact: Rinse wood dust off with water. DO NOT RUB. Once the skin is free of the wood dust, wash thoroughly with soap and water. Seek medical aid if severe irritation develops.
Ingestion: Rinse the victim's mouth out with water. Do not induce vomiting. If symptoms develop, call a physician.

5. FIRE FIGHTING MEASURES

Flash Point NA
Auto-ignition NA
Lower Explosive Limit NA
Upper Explosive Limit NA

Extinguishing Agents: Not applicable

Division 1 Project Requirements (Product Substitution Procedures) Section.

2.02 PRODUCT SUBSTITUTIONS

A. Substitutions: No substitutions permitted.

Specifier Note: Edit article below to suit project requirements. Specify only those species of wood and plywood eligible for UL listing in UL Building Materials Directory. Lumber species include Douglas fir, redwood, hem/fir, spruce/pine/fir, southern pine, white pine, ponderosa pine, western red cedar, red oak, yellow poplar. Plywood species include: Douglas fir, redwood, southern pine, lauan. When using fire retardant chemicals in roof applications, local building code ventilation requirements need to be verified and addressed; coordinate with Division 7 Roofing Sections.

2.03 RELATED WOOD MATERIALS

A. General: Refer to Division 6 Wood & Plastics Sections for related wood materials specified herein.
B. Moisture Content: Provide fire retardant treated wood with moisture content as follows:
   1. Lumber: Dried to a maximum moisture content of 19% after treatment.
   2. Plywood: Dried to a maximum moisture content of 15% after treatment.
C. Lumber: Dressed lumber, S4S, unless otherwise indicated.
   1. Light Framing:
      a. Studs: [Specify species, grade and dimensions.].
      b. Other Light Framing: [Specify thickness and face veneer grade(s).].
D. Plywood:
   1. Performance Rated Plywood: [Specify thickness and face veneer grade(s).].
   2. Plywood: [Specify thickness and face veneer grade(s).].

2.04 SOURCE QUALITY

A. Source Quality: Obtain fire retardant treatment from a single manufacturer.

Specifier Note: Coordinate paragraph below with Division 1 Quality Control, Source Quality Control Section.

B. Tests, Inspections: [Specify special plant and jobsite testing where required.].

PART 3 EXECUTION

Specifier Note: Article below is an addition to the CSI Section Format. Revise article requirements and specifier's practice.

3.01 MANUFACTURER'S INSTRUCTIONS

A. Compliance: Comply with manufacturer's product data, including product technical bulletins, for fire retardant treatment installation.

Specifier Note: Coordinate article below with Division 6 Wood Sections.

3.02 APPLICATION

A. Fire Retardant Treatment: Apply a fire retardant treatment in accordance with requirements of applicable codes and manufacturer's requirements.

3.03 PROTECTION

A. Protection: Protect fire retardant treated wood from damage during construction.

5. FIRE FIGHTING MEASURES CONT'D

Fire-Fighting Procedures: Fire from a separate fuel source may be intense enough to cause thermal decomposition releasing toxic fumes and/or gases. Wear complete fire service protective equipment, including full-face NIOSH and NFPA – approved self-containing breathing apparatus.
Fire and Explosion Hazard: High airborne levels of wood dust may burn rapidly in the air when exposed to an ignition source.

6. ACCIDENTAL RELEASE MEASURES

Spill or Leak Procedures: Not applicable.
Waste Disposal: See Section 13.

7. HANDLING AND STORAGE

Storage Conditions: Protect from physical damage. Maintain good housekeeping.
Caution: DO NOT BURN TREATED WOOD. Do not use pressure treated chips or sawdust as mulch. Whenever possible, sawing or machining treated or untreated wood should be performed outdoors to avoid accumulations of airborne wood dust. Wash hands thoroughly before eating, drinking, using tobacco products, and/or using restrooms.
NOTE: For plywood products only, provide adequate ventilation to reduce the possible buildup of formaldehyde vapors.

8. EXPOSURE CONTROLS / PERSONAL PROTECTION

Respiratory Protection: None normally required. When sawing or cutting treated or untreated wood, wear a NIOSH approved N95 or better dust mask.
Eye Protection: Wear safety glasses with side shields or safety goggles when sawing or cutting.
Skin/Foot Protection: Leather or comparable gloves to prevent splinters. Long sleeve shirt, pants and steel toed shoes when handling treated or untreated wood.
Ventilation: Saw, cut or machine wood outdoors or in well ventilated areas. Ventilation should be sufficient to maintain inhalation exposures below OSHA PEL for particulates.
Other Protective Equipment: Wear ear plugs or muffs when using power tools.
NOTE: For plywood products only, if Formaldehyde vapor level exceeds OSHA PEL or STEL, then a NIOSH approved respirator is required.

9. PHYSICAL AND CHEMICAL PROPERTIES

Appearance	Similar to untreated wood	**Specific Gravity (Water =1)**	NA
Odor	None	**Boiling Point**	NA
Solubility in Water	NA	**Vapor Density (Air=1)**	NA
Physical State	Solid	**Vapor Pressure**	NA
pH	NA	**Freezing Point**	NA

10. STABILITY AND REACTIVITY

Conditions contributing to instability: None known.
Incompatibilities: Strong acids, open flame and oxidizers.
Hazardous Reactions/Decomposition/Combustion Products: Combustion products may include smoke, toxic fumes or gases.
Hazardous Polymerization: Does not occur.

11. TOXICOLOGICAL INFORMATION

Carcinogenicity Data: IARC has classified untreated hardwood and hardwood/softwood mix wood dust as a Group I human carcinogen. The wood dust classification is based primarily on IARC's evaluation of increased risk in the occurrence of adenocarcinomas of the nasal cavities and paranasal sinuses associated with occupational exposures to untreated wood dust. NTP has classified all untreated wood dust as a carcinogen.

12. ECOLOGICAL INFORMATION

No data available.

13. DISPOSAL CONSIDERATIONS

Disposal Guidance: DO NOT BURN TREATED WOOD. Do not use pressure treated chips or sawdust as mulch. Dispose of in accordance with local, state and federal regulations. Under RCRA, it is the responsibility of the user of the product to determine at the time of disposal, whether the product meets RCRA criteria for hazardous waste. This product is typically not considered a hazardous waste but State run waste programs may be more stringent. Check with your local or state regulators prior to disposal.

14. TRANSPORT INFORMATION

DOT Hazardous Material Classification: This material is not regulated as a hazardous material by the DOT.

15. REGULATORY INFORMATION

OSHA (29 CFR 1910.1200): This product is regulated under the Hazard Communication Standard.
RCRA (40 CFR 261): DO NOT BURN TREATED WOOD. Do not use pressure treated chips or sawdust as mulch. Dispose of in accordance with local, state and federal regulations. Under RCRA, it is the responsibility of the user of the product to determine at the time of disposal, whether the product meets RCRA criteria for hazardous waste. This product is typically not considered a hazardous waste but State run waste programs may be more stringent. Check with your local or state regulators prior to disposal.
California Proposition 65: No

ABBREVIATIONS

OSHA	Occupational Safety and Health Administration
NFPA	National Fire Protection Association
FIFRA	Federal Insecticide, Fungicide and Rodenticide Act
CERCLA	Comprehensive Environmental Response, Compensation, and Liability Act
SARA	Superfund Authorization and Reauthorization Act
PEL	Permissible Exposure Limit
DOT	Department of Transportation
NTP	National Toxicology Program
CFR	Code of Federal Regulations
CWA	Clean Water Act
CAS	Chemical Abstracts Service
TLV	Threshold Limit Value
STEL	Short-Term Exposure Limit
RCRA	Resource Conservation and Recovery Act
ACGIH	American Conference of Governmental Industrial Hygienists
NIOSH	National Institute of Occupational Safety and Health
TSCA	Toxic Substances Control Act
IARC	International Agency for Research on Cancer
IBC	International Building Code
mg/m3	Milligrams per cubic meter
CAA	Clean Air Act

NOTICE: While the information and recommendations set forth herein are believed to be accurate as of the date hereof this company makes no guarantee or warranty, expressed or implied, as to the accuracy, reliability, or completeness of the information.

DRICON®
Fire Retardant Treated Wood

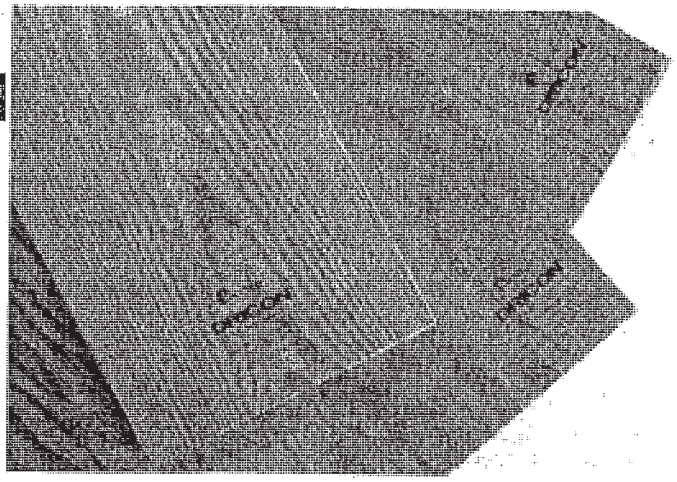

INTRODUCTION

Dricon® fire retardant treated (FRT) wood is an effective and economical material for reducing the effects of fire. Building code organizations and other construction-related agencies recognize it as an alternative to materials classified as noncombustible for a range of applications.

Introduced in 1981, Dricon® FRT wood is a development of Arch Wood Protection intended for weather-protected applications. Since that introduction, Dricon® FRT wood has proven itself in countless structures of many different types, from neighborhood schools to a maintenance building in Antarctica.

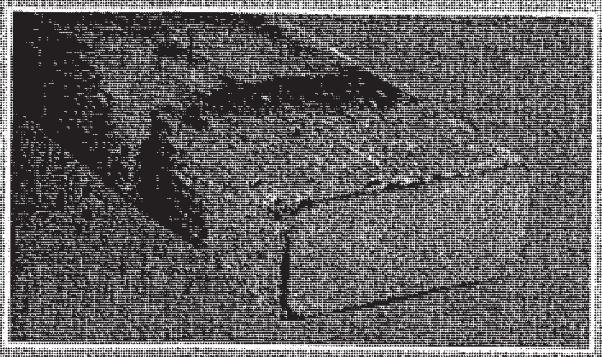

How It Works — Passive Protection

An important feature of Dricon® FRT wood is that it reacts automatically when exposed to fire. Dricon® chemicals react with combustible gases and fans normally generated by untreated wood and converts them to carbon char and harmless carbon dioxide and water. Wood loses strength in a fire only at the rate at which its cross section is reduced. The surface char acts to insulate underlying wood and reduces the rate at which the cross sectional area is reduced. The carbon dioxide and water vapor dilute the combustible gases to help reduce flame spread.

Preservative protection comes from the borate ingredient of the fire retardant solution. It renders the wood useless as a food source for termites and fungal decay, thereby avoiding damage caused by these organisms.

This treated wood contains a superior fire retardant chemical that remains stable in high temperature environments and does not increase the corrosivity of metal hardware in contact with the wood.

Dricon® FRT wood provides greater design latitude for the architect, engineer and contractor, and removes many barriers associated with conventional noncombustible materials such as masonry and steel. The use of Dricon® FRT wood can result in greater safety, reduced insurance rates, and easing of building code limitations.

Dricon® fire retardant (FR) chemical is formulated at one chemical manufacturing facility by trained chemical operators who recognize the importance of proper chemical composition. Each batch of Dricon® FR chemical is inspected and tested to be sure it adheres to the specifications of Arch Wood Protection and Underwriters Laboratories. UL lists Dricon® fire retardant as a recognized fire retardant chemical, indicating its suitability for use in fire retardant applications other than wood.

The chemical is purchased by a select group of quality-minded licensees who pressure treat wood to the prescribed requirements of Arch, Timber Products Inspection, and Underwriters Laboratories.

Recognition

Dricon® fire retardant or Dricon® FRT wood complies with or has been granted the following:

- CSA O80.20 for lumber
- CSA O80.27 for plywood
- UL Building Materials Directory
- UL Recognized Component
- AWPA C20, C27, C31
- AWPA P17 (FR-1), P5 (SBX)
- AWPA UC1, UC2, UCFA
- FR-S for lumber and plywood
- ICBO ER-5755
- EPA registration (62190-9)
- NER 303
- NYC MEA 199-81-M
- NYC MEA 200-81-M
- Factory Mutual Class I Roof Deck
- City of Los Angeles (RR 25122)
- FHA Minimum Property Standard #2600
- HUD Materials Release (1261)
- ASTM D 5516 & D 5564
- MIL-L-19140
- Qualified Products List

(All are subject to revision, re-examination)

1-THE PRODUCT

Dricon® FRT wood is lumber and plywood pressure-impregnated with Dricon® FR chemical. The wood is suited for nearly all interior applications and areas shielded from precipitation. According to the section 3.1.1.4 of the National Building Code of Canada (NBCC) treatment must be performed at a properly equipped, licensed pressure treating plant, in accordance with Canadian Standard Association's (CSA) standard O80 for Wood Preservation (for lumber CSA O80.20 and for plywood CSA O80.27). Following treatment, Dricon® FRT wood is re-dried to a moisture content of 19% or less for lumber and 15% or less for plywood. Drying after treatment to these levels is required to comply with the model building codes and ensures structural stability of the product.

The Dricon® fire retardant complies with formulation FR-1 in AWPA standard P17 and SBX in AWPA standard P5. It contains boron compounds listed in AWPA P5 and so, when wood is treated in accordance with AWPA C31 and Appendix H of the Use Category System, the formulation provides preservative efficacy in appropriate applications. Thus, in above-ground, weather-protected uses, Dricon® FRT wood resists damage from termites and decay fungi.

For more information on Standards, refer page 14.

Species Available

Only species that have been tested and are currently listed by Underwriters Laboratories are available.

Lumber

Douglas Fir	Balsam Fir
Jack Pine	Lodgepole Pine
Red Spruce	White Spruce
Black Spruce	Engelman Spruce
Southern Yello Pine	Hem/Fir
Ponderosa Pine	White Pine
White Fir	Spruce/Pine/Fir
Red Oak*	Alpine Fir
Redwood	Hemlock
Spruce	Red Pine
True Firs	Yellow Poplar*
Western Red Cedar*	

***Millwork Species**

Plywood

Spruce/Pine/Fir	Redwood
Douglas Fir	Lauan
Southern sYellow Pine	

Lumber and Plywood Sizes

All common sizes of most construction species of lumber and plywood can be treated with Dricon® FR chemcials. Size is generally limited only to the treating plant's ability to treat, dry, and handle large members. Western red cedar and red oak are limited to a maximum of 4/4" while yellow poplar is limited to 8/4" maximum thickness. All thicknesses of plywood can be treated however, for roof sheathing applications plywood shall be at least 1/2" thick with at least 4 plies.

Chemical Penetration

Penetration varies according to species. In FRT wood it is necessary to have adequate surface penetration to insure proper fire performance. Penetration minimums are prescribed by Underwriters Laboratories for each species they have tested. Incising of difficult-to-penetrate species of lumber prior to treatment may be common practice in some locations.

Treatment Leachability

Dricon® FRT wood is designed for above-ground applications, shielded from precipitation and direct wetting, as per AWPA C31 and further defined in UC1 and UC2 of the AWPA Use Category System. In such locations, where the chemicals will not leach, the fire retardant chemicals are stable and will remain effective for the life of the structure. Testing has demonstrated that short term exposure to the elements during construction will not adversely affect the fire retardant performance of Dricon® FRT wood. However, all unnecessary exposure should be avoided. FRT wood on the job site should be stored off the ground and protected from the weather. Dricon® FRT wood is suitable for use as plate stock.

Odor

The odor is no different from that of untreated wood.

Safety and Handling

The chemicals in Dricon® FRT wood are of very low toxicity and will not harm those involved in use and handling of the product. Normal safety and hygiene practices of working with untreated wood should be followed: wear gloves to avoid splinters, use a dust mask and eye protection when using power tools, and wash your hands after working. Ingestion tests have demonstrated that extreme amounts of wood must be ingested before the chemical exposure would become significant. Tests have shown smoke from Dricon® FRT wood to be no more toxic than untreated wood. Contact your supplier or Arch Wood Protection for further information.

DRICON®
Fire Retardant Treated Wood



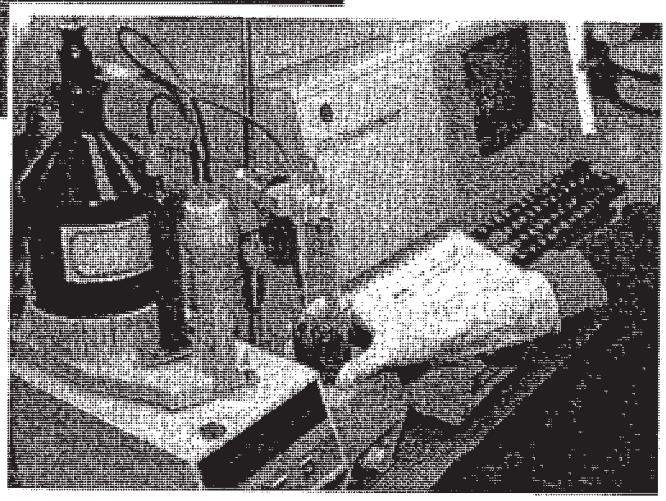

Quality Control

Comprehensive QC programs, conducted by third-party agencies, provide assurance that both Dricon® FR chemical and Dricon® FRT wood are consistently produced to meet performance standards.

Dricon® fire retardant is a UL Recognized Component and its production is subject to periodic checks by Underwriters Laboratories. These checks cover ingredient purchases, formulation composition, and manufacturing procedures. In addition, Factory Mutual Research Corporation conducts its own annual audit of these production practices. These independent agencies supplement the daily activities of the manufacturer, Arch Wood Protection.

Scrutiny of treating plants is equally intense. Besides the plants' own QC activities, Arch requires licensees to provide solution samples and calibrates plant and kiln equipment for accuracy. Moreover, on a regular ongoing basis, UL and Timber Products Inspection review treating and drying records, and monitor solutions.

Identification/Fire Codes

Each piece of Dricon® FRT wood is marked with an ink stamp or paper label bearing the classification mark of Underwriters Laboratories (UL). The UL classification stamp/label describes the surface burning characteristics, identifies the name and location of the treating plant, indicates it has been kiln dried after treatment and catagorizes the lumber/plywood as an Interior Type A, low hygroscopic product.



These labels must be put on every 100 board feet of lumber and a minimun of every 32 square feet of plywood. This way onsite FRT wood can be identified by locating the label on the product.

2-TYPICAL APPLICATIONS

ricon® FRT wood is ideal for use:

- Where other materials would permit a fire to spread without restriction from an ignition source.
- In areas of construction where there is inadequate water supply or fire protection.
- As a backer board for fuse boxes and electrical panels.
- In indoor construction staging, scaffolds, workmen's shanties, etc. during construction or repairs of expensive equipment or multi-story buildings.
- In areas where sprinkler systems cannot be readily installed, such as framing under raised platforms or theater stages, floor framing, walls, stud areas enclosed under roofs and framing for all types of remodeling work.
- In health care facilities where a versatile and economical construction system is desirable, but life safety cannot be compromised.

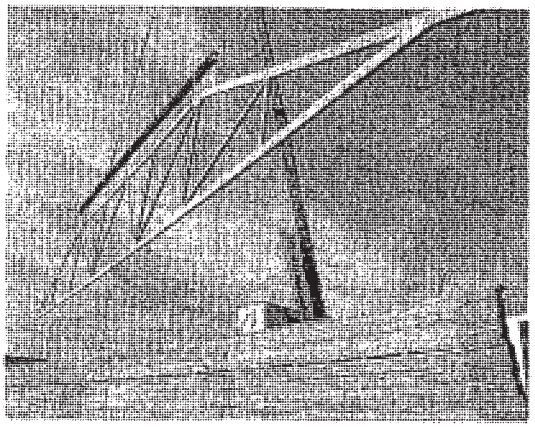

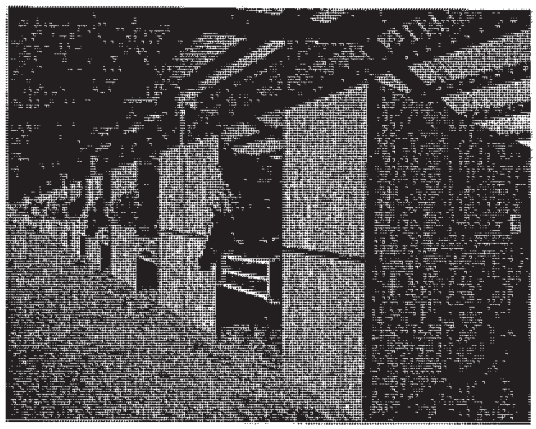

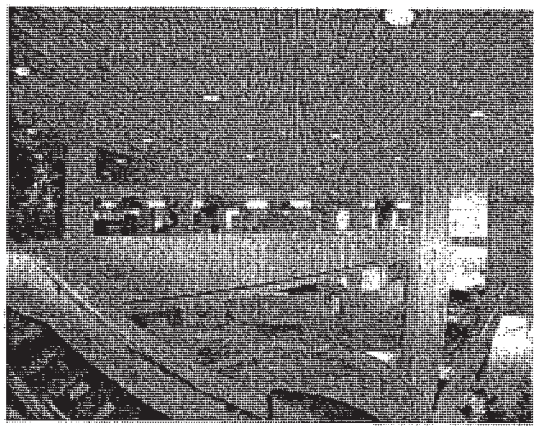

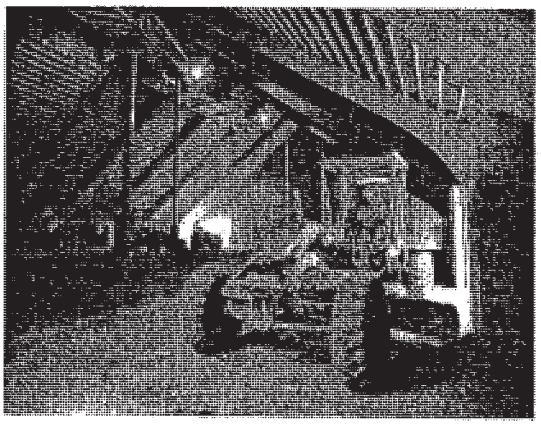

me examples

a. Studs, wall plates and fire stops with metal lath and plaster or dry wall construction for interior non-bearing walls and partitions where noncombustible construction is required (see codes for specific details).

b. Roof systems including the deck, purlins, joists, and metal plate connected wood trusses.

c. Air return plenum framing in HVAC systems.

d. Studs, joists and sheathing in sensitive areas housing computer and electron systems.

e. Shelving, bins, tote boxes, work benches, pallets.

f. Wood members in fertilizer and chemical plants where highly corrosive conditions would require continuing maintenance of protective coatings on metal systems.

g. Buildings in recreation areas such as camps or lodges, which may be at a high fire risk because they are not inhabited during certain seasons or are in areas of inadequate fire protection services.

rchitectural applications, such as interior siding and millwork.

DRICON®
Fire Retardant Treated Wood

3-FIRE PERFORMANCE

All FRT wood, according to the NBCC, must have a designated flame spread rating and only an accredited, third party testing agency can perform this test.

Dricon® FRT wood has been tested for fire performance by several independent laboratories. Surface burning characteristics have been evaluated by Underwriters Laboratories (UL) and meet model code requirements.

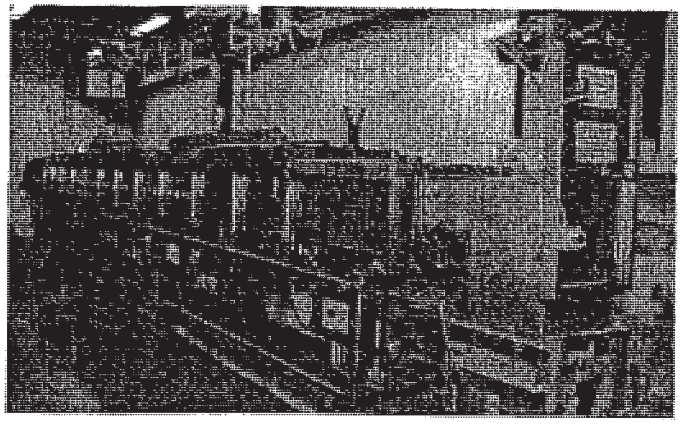

As a result of UL 723 tunnel testing at Underwriters Laboratories (CAN4-S102M, UL 723, ASTM E 84, and NFPA 255 are essentially identical) *an FR-S surface burning characteristic classification has been assigned to all softwood species of Dricon® FRT wood.*

Flame Spread & Smoke Developed Values

Basically in a tunnel test, the distance which the flame has travelled is measured against two standards; cement asbestos board rated at zero and untreated red oak rated at one hundred.The tunnel test compares surface burning characteristics of tested materials to those of asbestos cement board and untreated red oak lumber. A rating of 0 is assigned to asbestos cement board and a rating of 100 is assigned to untreated red oak flooring. Flame spread ratings of various species of untreated lumber range from 60 to 230. During this test, smoke emissions or smoke development raiting is also measured, since FRT wood is a building material and in the event of a fire, smoke is one of the greatest threats to life and safety. This rating is assigned on the same scale and are established during the first 10 minutes. However, unlike for fire retardant coatings, building codes require that the test be extended from 10 minutes to 30 minutes and the flame spread not progress more than 10 1/2 feet beyond the burners and show no evidence of progressive combustion.

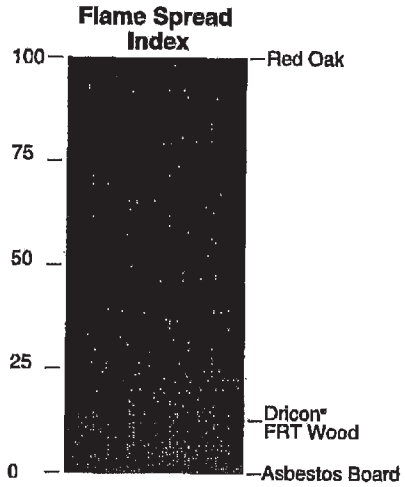

The FR-S classification denotes that the lumber or plywood has a flame spread and smoke developed index of 25 or less when tested in the E-84 tunnel test and shows no evidence of progressive combustion in 30 minutes. Any species not meeting the requirements for the FR-S classification will be listed with the individual flame spread and smoke developed ratings. Dricon® treatment reduces the flame spread of most species to less than 15 which is essentially the same as gypsum wallboard.

Dricon® FRT wood also achieved a smoke developed index of less than 25 for all listed species of plywood and most species of lumber.

Standard tests for surface burning characteristics of materials referenced in the model codes as a basis of acceptance of fire retardant treated wood are all essentially the same.

- CAN4-S102M, Standard Method of Test for Surface Burning Characteristics of Building Assemblies.
- UL 723-Standard Test Method for Surface Burning Characteristics of Building Materials was developed by Underwriters Laboratories and subsequently adopted by ASTM as Standard E 84.
- ASTM E 84-Standard Test Method for Surface Burning Characteristics of Building Materials is essentially the same as UL 723. It also has been adopted by ANSI.
- NFPA 255-Method of Test for Surface Burning Characteristics of Building Materials is essentially the same as UL 723 and ASTM E 84.

Factory Mutual Research has also evaluated Dricon® FRT wood and found that it meets the requirements for a Class 1 impregnated lumber deck. The ASTM E 162 radiant panel test and NFPA 258 smoke density test have been conducted by the Hardwood Plywood Manufacturers Association and have demonstrated the acceptability of Dricon® FRT wood under Department of Transportation regulations for use in mass transit vehicles.

3-FIRE PERFORMANCE

Tests

Dricon® FRT wood has been tested in accordance with the following procedures:

- ASTM D 1413
- ASTM D 3201
- ASTM D 3445
- ASTM D 5516
- ASTM D 5664
- ASTM E 84
- ASTM E 162
- Boeing BSS 7239
- MIL-L-19140
- NFPA 255
- NFPA 258
- NFPA 259
- UL 723

Fire Resistance

Hourly Ratings

Fire retardant treated (FRT) wood has a surface burning classification and, by itself, does not have a resistance rating in hours any greater than untreated wood. Fire ratings in hours are assigned to door, wall, or deck assemblies. The Underwriters Laboratories "Fire Resistance Directory" specifically points out that FRT wood may be substituted for untreated wood in any related assembly.

Dricon® FRT wood can be used as a component of such assemblies in structures where the code does not permit the use of untreated wood.

Descriptions of fire resistance rated assemblies incorporating structural lumber are listed in several publications, with the following being those generally referenced in model building codes:

- Fire Resistance Directory, published by Underwriters Laboratories
- Fire Resistance Ratings, published by Engineering and Safety Service of the American Insurance Service Group
- Fire Resistance Design Manual, published by the Gypsum Association

For example, the Gypsum Association's "Fire Resistance Design Manual" shows a one hour wall or partition assembly (WP 3605) that has wood studs covered by 5/8" Type X gypsum board with specified nailing and positioning of the panels. This assembly could be used for interior, nonbearing partitions, requiring a one hour rating in a noncombustible structure if the studs were Dricon® FRT wood. In similar manner, by substituting Dricon® FRT wood for untreated wood, other one and two hour wall and ceiling assemblies can be used in noncombustible type buildings. The model codes also permit use of ceiling assemblies with the top membrane omitted where only unused attic space is above.

Some model codes and local building officials will accept the Component Additive Method (CAM) for calculating fire resistance in lieu of actual assembly testing. The CAM concept entails adding the resistance rating of individual components to qualify the resistance rating of the assembly.

The lumber and plywood used in rated assemblies or CAM listings are usually not identified as being untreated or FRT wood, but the model codes generally do require that any wood used in noncombustible types of construction be fire retardant treated.

Also, due to wood's natural ability to insulate, wood may be more acceptable than unprotected steel in fire resistant assemblies.

For more information on CAM, contact the American Forest and Paper Association and ask for the brochure, "Component Additive Method (CAM) for Calculating and Demonstrating Assembly Fire Endurance," Publication T-20, or contact Arch Wood Protection.

One Hour Wood Truss Assemblies

Recent testing has provided effective and competitive designs for one hour rated floor/ceiling and roof/ceiling metal plate connected wood trusses. Unlike earlier designs, the one hour rating can now be achieved with only one layer of 5/8" Type X gypsum wallboard applied directly to the bottom chord of the truss.

Dricon® FRT wood can be used in place of untreated wood in many of these designs and will enable the use of these assemblies in many building construction types that do not permit untreated wood. These new construction assemblies provide greater savings than ever before when Dricon® FRT wood construction is substituting for hourly rated steel or concrete construction.

DRICON®
Fire Retardant Treated Wood

4-HYGROSCOPICITY & CORROSION

The Dricon® FR chemical was developed specifically to overcome problems with hygroscopicity and corrosion, enabling greater opportunities for FRT wood in the truss industry. It is based on fire retardant chemicals having a high molecular weight and very limited solubility. The formulation has not been changed since its development in the 1970's and commercial introduction in 1981.

Hygroscopicity

A material which gains moisture from the atmosphere as the relative humidity increases is said to be hygroscopic. The more hygroscopic a material is, the more moisture it will pick up during periods of high humidity. Wood is naturally hygroscopic, and fire retardants can increase this property from very little to significantly. Thus, there is no such thing as non-hygroscopic FRT wood. Some fire retardants absorb excessive moisture which can create problems with appearance, surface finishing, and corrosion of metal hardware. *However, the Dricon® formulation only slightly increases the hygroscopic properties of untreated wood.*

The American Wood-Preservers' Association Standards C20 and C27 and Appendix H of the AWPA Use Category System differentiate between "low-hygroscopic" Type A products and other more hygroscopic Type B products. Type A products must remain at or below the fiber saturation point of wood (28% moisture content) when conditioned at 92% relative humidity and 80° F. Furthermore, Type A products are differentiated by their intended application (i.e., Type A high temperature (HT) and Type A low temperature (LT). Dricon® FRT wood is listed as an interior Type A (HT) product by AWPA.

In tests conducted in accordance with ASTM D 3201, there was very little difference between the moisture content of Dricon® FRT wood and untreated wood. Even when the relative humidity was increased from the specified test level of 90% up to 96%, the difference remained slight. By comparison, typical conventionally treated samples had twice the moisture gain of untreated wood even below 85% relative humidity.

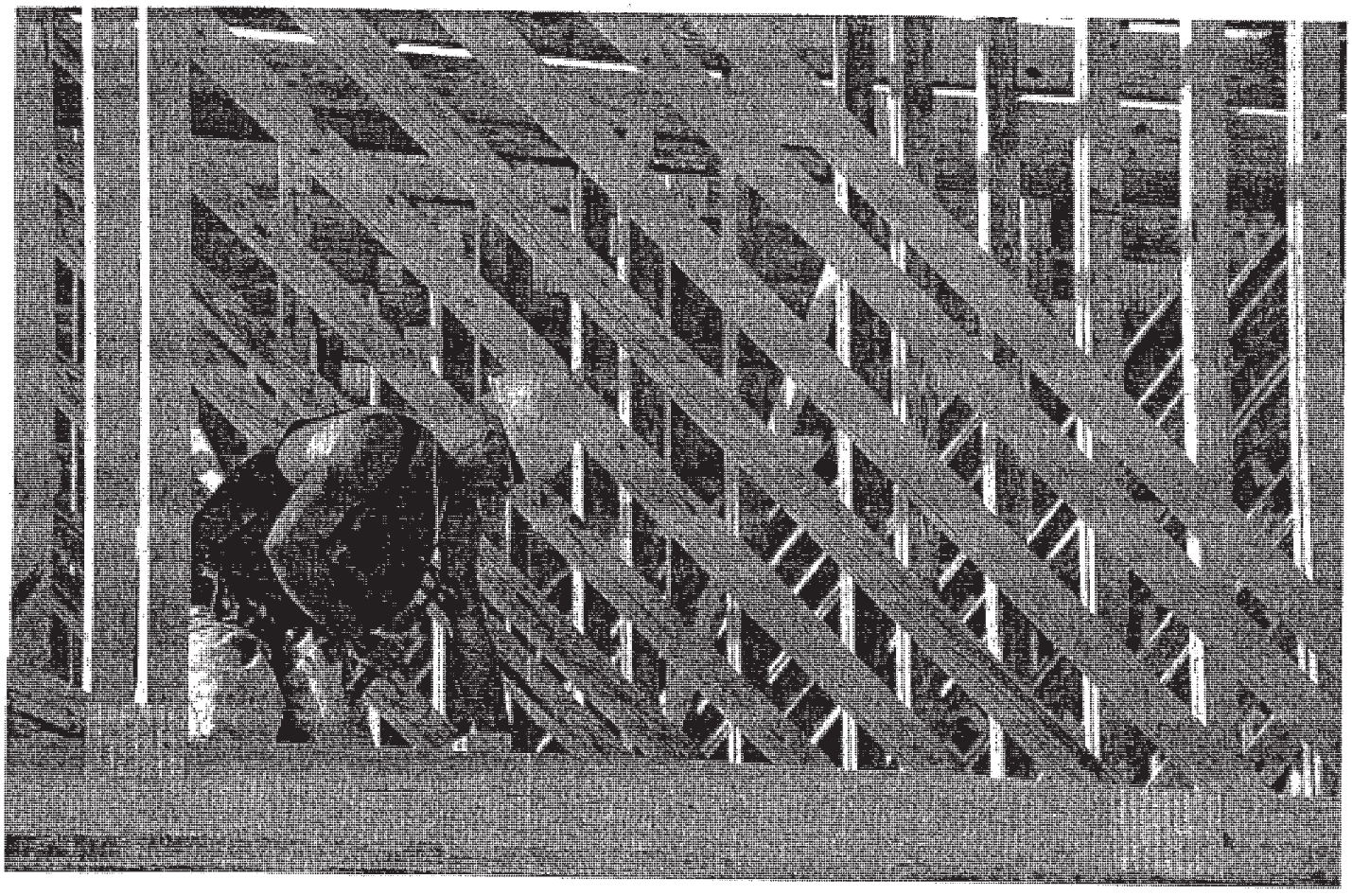

4-HYGROSCOPICITY & CORROSION

Corrosion

Corrosion is the tendency of a material to oxidize by chemical reaction. This process occurs more rapidly at higher moisture and temperature levels. Historically, FRT wood has been considered corrosive because of excessive moisture gain at elevated relative humidities. Conventional types of fire retardants have caused corrosion problems and failure in various types of metal hardware and fasteners, and structural components. *Dricon® FRT wood, however, has demonstrated no greater corrosion rates than untreated wood.*

Accelerated tests following procedures of military specification MIL-L-19140 have demonstrated Dricon® FRT wood to be no more corrosive to various metals than untreated wood. Dricon® FRT wood samples were tested in contact with aluminum, carbon steel, hot-dipped galvanized steel, copper, and red brass.

Other tests have demonstrated that Dricon® treatment may actually help reduce corrosion of the protective zinc layer on galvanized steel truss plates. If the exposure is such that moisture might condense between wood and the metal hardware, siding, or roofing, corrosion can be expected with either treated or untreated wood. Even with untreated wood, this type of environment requires back priming with a corrosion inhibitive paint on the surface of the metal in contact with the wood or use of a moisture barrier. The same precautions should be taken when using Dricon® FRT wood.

Corrosion of Metals in Contact with Dricon® FRT Wood

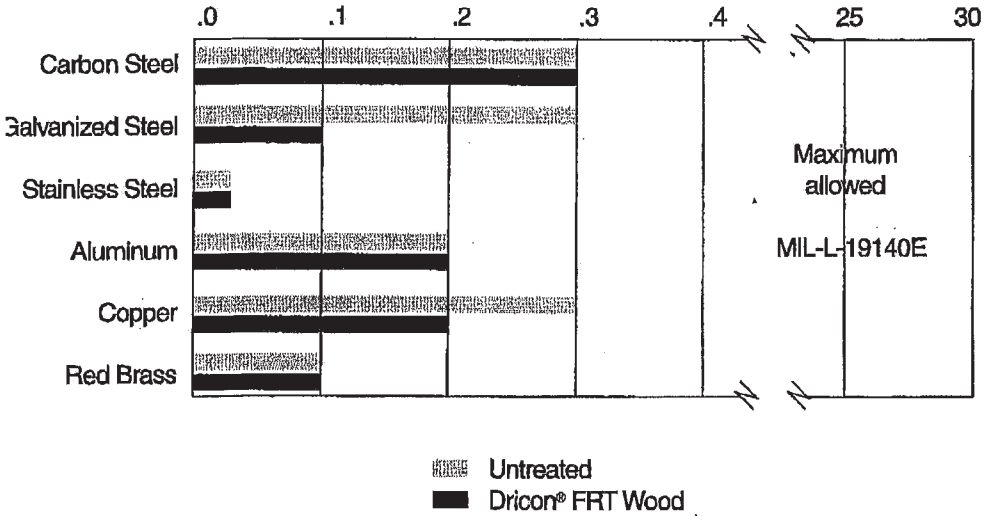

Results are average corrosion rates of metals in contact with southern pine, Douglas fir, and spruce wood blocks.

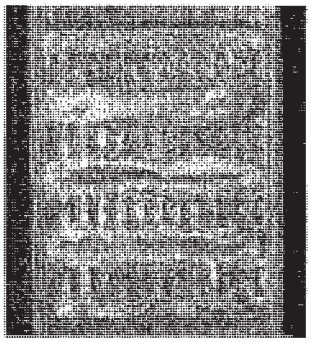

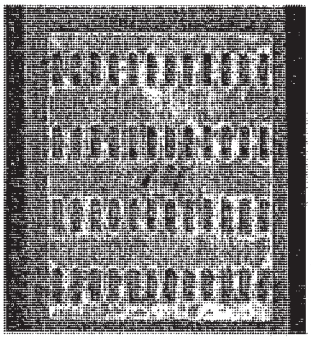

Conventional fire retardants can cause corrosion of truss plates (above) and metal hardware; Dricon® FRT wood (below), exposed in identical conditions, is no more corrosive than untreated wood.

DRICON®
Fire Retardant Treated Wood

5-STRENGTH PROPERTIES

For many years, design values for FRT wood have been adjusted from values for untreated wood to allow for the reduction in strength caused by the treating and kiln drying process.

These traditional strength adjustments are no longer applicable. Arch Wood Protection, manufacturer of Dricon® FR chemical, has thoroughly evaluated the strength properties of Dricon® FRT wood including high temperature exposures (in accordance with ASTM D 5664 and D 5516) that may occur during the life of a structure, and provides recommended strength value adjustments on behalf of all licensed producers of Dricon® FRT wood products.

Always check applicable local codes to insure acceptability.

The effects of incising on the strength of untreated wood is not thoroughly documented. Several species of Dricon® FRT wood are commonly incised prior to treatment. In applications where strength is critical, use only unincised lumber and apply the appropriate design factors.

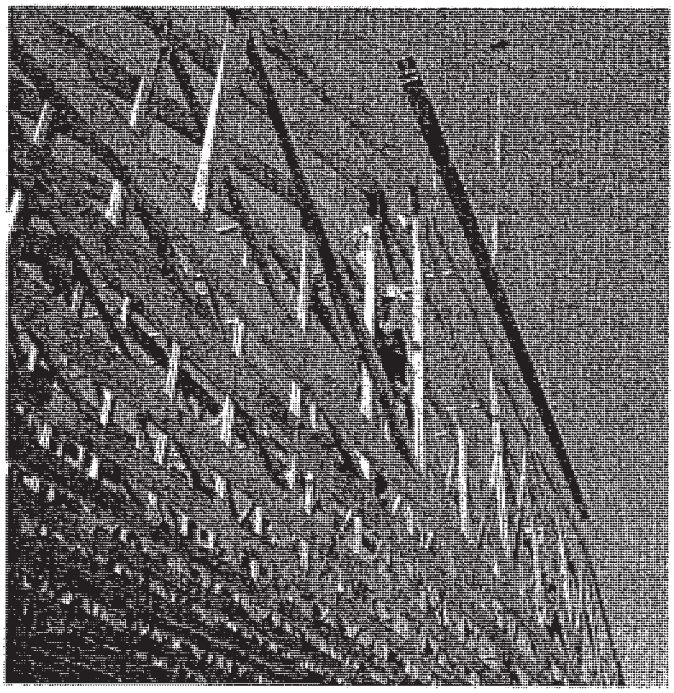

Dricon® Plywood Span Ratings*
for APA Rated Sturd-I-Floor and APA Rated Sheathing

APA Rating	Panel Thickness	Dricon® Rating
12/0	5/16	12/0
16/0	5/16, 3/8	16/0
20/0	5/16, 3/8	20/0
24/0	3/8, 7/16, 1/2	24/0
24/16	7/16, 1/2	24/16
32/16	15/32, 1/2	24/16
32/16	5/8	32/16
40/20	5/8, 19/32	32/20
40/20	3/4, 7/8	40/20
48/24	23/32, 3/4	40/24
48/24	7/8	48/24

***Valid for unsanded plywood in exposures of up to 170°F, anywhere in North America.**

Plywood gluelines shall be Exposure 1 and face plies shall be Group 1 species. Allowable uniformly distributed live load at maximum span for RATED STURD-I-FLOOR and RATED SHEATHING is 85 psf for floors (55 psf for STURD-I-FLOOR 48" OC) and 30 psf for roofs plus 8.5 psf dead load in each case.

**Arch does not recommend 5/16 or 3/8 panel thicknesses for roofing applications due to springiness.*

Caution Necessary When Substituting

Design and strength values are not the same for all brands of FRT wood. If a project is designed based on strength factors for one product, the substitution of an alternate brand may not meet the intended strength values. It is best to get the specifier's approval before making a brand substitution.

Dricon® FRT Lumber Strength Design Factors*
Dricon® FRT wood Compared to Untreated Lumber

Applicable at Temperatures up to:	Spruce 80°F	Spruce 150°F	Douglas Fir 80°F	Douglas Fir 150°F	Southern Pine 80°F	Southern Pine 150°F	Other Species 80°F	Other Species 150°F
Compression Parallel to Grain, Fc	.95	.67	.91	.65	.94	.67	.91	.65
Horizontal Shear, F_V	.95	.69	.94	.67	.95	.69	.94	.67
Tension Parallel to Grain, Ft	.98	.85	.87	.80	.92	.85	.87	.80
Bending: Modulus of Elasticity, E	.98	.91	.98	.91	.98	.91	.98	.91
Extreme Fiber Stress, Fb	.98	.80	.90	.80	.89	.80	.89	.80

***Applies throughout North America**

DRICON®
Fire Retardant Treated Wood

9-BUILDING PROCEDURES

Construction Safety

The same common sense precautions should be taken when handling Dricon® FRT wood as with untreated wood or other building materials. Dust masks and eye protection devices are recommended to avoid possible irritation from sawdust and wood chips. Gloves will help avoid splinters. Hands should be washed after doing construction work.

Tips on Using Dricon® FRT Wood

Dricon® treatment does not substantially change the physical characteristics of ordinary lumber.

Proper handling procedures should be followed when using Dricon® FRT lumber and plywood.

- Dricon® FRT wood should not be installed where it will be exposed to precipitation, direct wetting, or regular condensation.
- Dricon® FRT wood should not be used in contact with the ground.
- Wood that gets wet during construction should be allowed to dry before being covered or enclosed.
- When storing Dricon® FRT wood, the material should be kept off the ground and covered to shield it from precipitation.
- When installing Dricon® FRT lumber and plywood, it is important to utilize the design value adjustments published in and this handbook.
- Dricon® FRT plywood should be spaced and fastened as recommended in "Design and Construction Guide for Residential and Commercial Uses," published by APA-The Engineered Wood Association, or the "Plywood Handbook" published by the Canadian Plywood Assocation (CanPly).
- Normal carpentry practices are applicable. End cutting, drilling, joining, and light surface sanding will not significantly reduce the benefits of the Dricon® treatment. Ripping and milling of lumber is not recommended since they may alter the burning characteristics and invalidate the Underwriters Laboratories flame spread classification. Plywood may be cut in any direction.
- When painting or staining, the paint or stain manufacturer's recommendations should be followed. As with untreated lumber, the surface should be clean and dry.

When used and handled properly, in accordance with these recommendations, you will receive many years of service from your Dricon® FRT wood.

Workability

Cutting to length, drilling holes, joining cuts and light sanding are permissible. It is not necessary to field treat cut ends to maintain flame spread rating.

Ripping and milling are not permitted except on red oak and yellow poplar lumber. Surfacing to a depth of 1/16" is permitted on western red cedar lumber. On other species, these operations may alter the surface burning characteristics and will invalidate the UL label.

Carbide tipped saw blades are recommended if extensive cutting operations are to be performed. However, Dricon® FRT wood is not as abrasive as many conventional fire retardants.

Unlike FRT lumber, Dricon® FRT plywood can be cut in either direction without loss of fire protection in that surface burning characteristics of plywood are unchanged.

Fastener Design Values

Dricon® FRT wood has recommended fastener design value adjustments based on full size independent testing completed at Virginia Polytechnic Institute. The adjustments for lateral and withdrawal loading of nailed, screwed and bolted joints range from 0 to 8 percent reduction.

Fastener Design Value Factors
Dricon® FRT Lumber Compared to Untreated Lumber

Fasteners/Connectors		Southern Pine	Douglas Fir	Spruce	Other Species
Nails	Withdrawal	0.91	0.91	1.0	0.91
	Lateral	0.98	0.98	1.0	0.98
Wood Screws	Withdrawal	0.94	0.94	1.0	0.94
Bolted Joints	Parallel to Grain	0.92	0.92	1.0	0.92
	Perpendicular to Grain	0.96	0.96	1.0	0.96

Recommended Hardware

Galvanized steel hardware is recommended for use with Dricon® FRT wood. Although Dricon® treatment does not increase corrosion of bare or galvanized steel, the galvanizing provides an extra measure of protection of any treated wood.

10-STANDARD & BUILDING CODES

anadian Standards Association



For a wood preservative to work effectively, it must be applied under controlled conditions to ensure the product will perform in service. CSA has developed a series of wood standards and specifications to ensure the end user that the specified material is adequately treated.

CSA Standards for Wood Preservation are recommended for general use in Canada when specifying all types of preserved wood.
In developing the CSA Standards it has been found practical to make use of the basic atandards of the AWPA, many of which are drawn up with the help of Canadian members of AWPA, and to modify these with Canadian supplemental requirements when different service conditions or prac-ies in Canada require it.

It is recommended that the user consider these standards as a guide, as it is not possible to provide a detailed standard that will meet all requirements.

American Wood-Preservers' Association

The American Wood-Preservers' Association (AWPA) is the principal standards-writing body for the wood preserving industry in the United States. AWPA Standards help ensure that treated wood products perform satisfactorily for their intended use. AWPA Standards include *Preservative Standards (P)*, which detail specifications for all AWPA accepted wood preservatives and fire retardants, and *Commodity Standards (C)*, which contain treatment specifications for different commodities.

AWPA Use Category System

The Use Category System (UCS) was developed as a format revision for the *Commodity Standards* and is not intended to make substantive technical changes to those standards. Detailed specifications for fire retardant treated wood are found in Appendix H of the UCS. Beginning with 1999 AWPA Book of Standards, the UCS was published allel with the *Commodity Standards*. It is anticipated that the *Commodity Standards* will be removed sometime after the 2001 edition in favor of the UCS.

The UCS contains:

- Definitions of the Use Categories
- Service conditions
- Treated wood use selection guide
- List of AWPA accepted preservative and fire retardant systems
- Guide to Use Categories
- Appendices relating to specific product types, e.g., sawn products, poles, FRT wood

AWPA Recognition of Dricon® FRT Wood

Dricon® FR chemical and Dricon® FRT wood have been listed in AWPA's P, C, and UCS Standards. As the AWPA does not permit the listing of trade names, Dricon® FR chemical and FRT wood are listed as "FR-1" throughout those standards relating to fire retardant formulations (P17), FRT wood (C20 and C27), and the UCS (Use Category UCFA).

Dricon® FR chemical and Dricon® FRT wood are also recognized as an effective preservative system for above ground, weather-protected applications. As such, Dricon® fire retardant is also listed as an inorganic borate preservative and meets the requirements of AWPA P5, Waterborne Preservatives (Section 9), and Dricon® FRT wood satisfies AWPA C31, Lumber Used Out Of Contact With The Ground and Continuously Protected From Liquid Water. The corresponding UCS sections are UC1 and UC2.* For preservative applications, Dricon® FR and FRT wood are designated as "SBX" in the P, C, and UCS standards.

**UC2 has been approved by the technical sub-committees of AWPA and is expected to be ratified and included in the 2001 Book of Standards.*

SECTION 06073
FIRE RETARDANT TREATMENT

PART 1 GENERAL

1.01 SUMMARY

A. Section includes: Fire retardant treatment for wood, including framing, decking, sheathing and other wood construction, not exposed to weather.

Specifier Note: Revise paragraph below to suit project requirements. Add section numbers and titles per CSI Master Format and specifier's practice.

B. Related Sections: Section(s) related to this section include:
   1. Rough Carpentry: Division 6 Rough Carpentry Section.
   2. Finish Carpentry: Division 6 Finish Carpentry Section
   3. Architectural Woodwork: Division 6 Architectural Woodwork Section.

Specifier Note: Article below can be omitted when specifying manufacturer's proprietary products and recommended installation. Retain Reference Article when specifying products and installation by an industry reference standard. If retained, list standard(s) referenced in this section. Indicate issuing authority name, acronym, standard designation and title. Establish policy for indicating edition date of standard referenced. Conditions of the Contract or Division 1 References Section may establish the edition date of standards. This Article does not require compliance with standard, but is merely a listing of references used. Article below should list only those industry standards referenced in this section.

1.02 REFERENCES

A. General: Standards listed by reference, including revisions by issuing authority, form a part of this specification section to extent indicated. Standards listed are identified by issuing authority, authority abbreviation, designation number, title, or other designation established by issuing authority. Standards subsequently referenced herein are referred to by issuing authority abbreviation and standard designation. Most recent editions should be used.

B. American Society for Testing and Materials (ASTM):
   1. ASTM D 5516 Standard Test Method for Evaluating the Flexural Properties of Fire-Retardant Treated Softwood Plywood Exposed to Elevated Temperatures.
   2. ASTM D 5664 Standard Test Method for Evaluating the Effects of Fire-Retardant Treatments and Elevated Temperatures on Strength Properties of Fire-Retardant Treated Lumber.
   3. ASTM E 84 Standard Test Method for Surface Burning Characteristics of Building Materials.

C. American Wood-Preservers' Association (AWPA):
   1. AWPA Standard C20 Structural Lumber - Fire Retardant Treatment by Pressure Processes.
   2. AWPA Standard C27 Plywood - Fire Retardant Treatment by Pressure Processes.
   3. AWPA Standard C31 Lumber Used Out of Contact with the Ground and Continuously Protected From Liquid Water - Treatment by Pressure Processes.
   4. AWPA Standard P5 Standard for Waterborne Preservatives.
   5. AWPA Standard P17 Fire Retardant Formulations.
   6. AWPA Use Category System, Appendix H.
   7. AWPA Use Category UC1.
   8. AWPA Use Category UC2.

D. Military Specification (Mil. Spec.):
   1. Mil. Spec. L-19140E Lumber and Plywood, Fire-Retardant Treated.

E. National Fire Protection Association (NFPA):
   1. NFPA 255 Standard Test Method for Surface Burning Characteristics of Building Materials.

F. Underwriters Laboratories, Inc. (UL):
   1. UL 723 Test for Surface Burning Characteristics of Building Materials.
   2. UL Building Materials Directory.

Specifier Note: Article below should be restricted to statements describing design or performance requirements and functional, not dimensional, tolerances of a complete system. Limit descriptions to composite and operational properties to extent necessary to link multiple components of a system together and to interface with other systems.

1.03 SYSTEM DESCRIPTION

A. Performance Requirements: Provide fire retardant treatment which will perform in accordance with manufacturer's stated performance criteria without defects, damage or failure.

Specifier Note: Article below includes submittal of relevant data to be furnished by Contractor either before, during or after construction. Coordinate this Article with Architect's and Contractor's duties and responsibilities in Conditions of the Contract and Division 1 Submittal Procedures Section.

1.04 SUBMITTALS

A. General: Submit listed submittals in accordance with Conditions of the Contract and Division 1 Submittal Procedures Section.

B. Product Data: Submit product data, including manufacturer's SPEC-DATA® product sheet, for specified products.

C. Quality Assurance Submittals: Submit the following:
   1. Test Report: Certified test report showing compliance with specified performance characteristics and physical properties. Include in test report certification that fire retardant solution does not contain ammonium phosphate.

a. Evaluation Report: National Evaluation Report NER 303 ICBO ER-5755 indicating flame spread, strength, corrosion and hygroscopic properties.
2. Certificate: Certification from treatment plant certifying wood treatment applied complies with Dricon® fire retardant treatment by Arch Wood Protection.

D. Closeout Submittals: Submit the following:
1. Warranty: Warranty documents specified herein.

Specifier Note: Article below should include prerequisites, standards, limitations and criteria which establish an overall level of quality for products and workmanship for this section. Coordinate article below with Division 1 Quality Assurance Section.

1.05 QUALITY ASSURANCE

A. Wood Treatment Plant Qualifications: Wood treatment plant experienced in performing work of this section which has specialized in the treatment of wood similar to that required for this project and a plant licensed by Arch Wood Protection.

Specifier Note: Retain Paragraph below to suit project requirements; otherwise, delete Paragraph below.

1. Certificate: When requested, submit certificate indicating qualification.

Specifier Note: Paragraph below should list obligations for compliance with specific code requirements. General statements to comply with a particular code are typically addressed in Conditions of the Contract. Repetitive statements should be avoided. Edit paragraph below to suit project requirements.

B. Regulatory Requirements: Provide fire retardant treatment which complies with the following regulatory requirements:
1. New York City MEA (199-81-M, 200-81-M).
2. FHA Minimum Property Standard #2600.
3. HUD Materials Release 1261.
4. Wisconsin Material Approval 960073-W.

Specifier Note: Article below should include special and unique requirements. Coordinate article below with Division 1 Product Requirements Sections. Coordinate article below with related Division 6 Wood & Plastics Sections.

1.06 DELIVERY, STORAGE & HANDLING

A. General: Comply with Division 1 Product Requirements Sections.
Storage and Protection: Store materials protected from exposure to harmful weather conditions and at temperature conditions recommended by manufacturer.

PART 2 PRODUCTS

Specifier Note: Retain article below for proprietary method specification. Add product attributes, performance characteristics, material standards and descriptions as applicable. Use of such phrases as "or equal" or "or approved equal" may cause ambiguity in the specifications. Such phrases require verification (procedural, legal, regulatory and responsibility) for determining "or equal" products.

2.01 FIRE RETARDANT TREATMENT

A. Manufacturer: Arch Wood Protection.

Specifier Note: Paragraph below is an addition to CSI Section Format. Retain or delete paragraph below per project requirements and specifier's practice.

1. Contact: 1955 Lake Park Drive, Suite 250, Smyrna, GA 30080; Telephone: (770) 801-6600; Fax: (770) 801-1990.

B. Product Treatment: Dricon® fire retardant treatment for wood is produced by licensed treatment plant. Fire retardant chemical shall provide protection against termites and fungal decay, shall be registered for use as a wood preservative by the U.S. Environmental Protection Agency (EPA), shall comply with formulation FR-1 of the current edition of AWPA Standard P17, and shall be free of halogens, sulfates and ammonium phosphate. Treated wood shall have a flame spread of less than 25 when tested in an extended 30 minute tunnel test in accordance with ASTM E 84, NFPA 255 or UL 723.

1. Corrosion Properties: Fire retardant treated wood in contact with carbon steel, galvanized steel, aluminum, copper and red brass shall exhibit corrosion rates less than 1 mil (0.025 mm) per year when tested in accordance with Fed. Spec. MIL-L-19140, Paragraph 4.6.5.2.
2. Testing: Testing on fire performance, strength and corrosion properties of fire retardant treated wood shall be recognized by issuance of a National Evaluation Services Report.

C. Fire Retardant Treatment: Manufacturer's solution for fire retardant treatment of wood.
1. Lumber Treatment Standard: Comply with AWPA Standard C20, current edition, and Appendix H of AWPA Use Category System.
2. Plywood Treatment Standard: Comply with AWPA Standard C27, current edition, and Appendix H of AWPA Use Category System.

Specifier Note: Edit article below to suit project requirements. If substitutions are permitted, edit text below. Add text to refer to

SUBMITTALS IDENTIFICATION SHEET

PROJECT: Wastewater Treatment Plant Upgrade
Iqaluit, Nunavut

NUNAMI
STANTEC LIMITED
1088C Noble House
Iqaluit NU
www.stantec.com

CONTRACTOR: Kudlik Construction Ltd, Project 2018-062

Telephone: 867-979-1166

E-mail: srousseau@kudlik.biz

SUBCONTRACTOR:

Person responsible:

Telephone: () E-mail:

PRODUCT SUBMITTED:

☐ As Specified

☐ Alternate

SUPPLIER or MANUFACTURER: Canac

Person responsible:

Telephone: E-mail: patrick.belanger@canac.ca

DESCRIPTION OF SUBMITTAL: fire retardant treated wood

# of pages:

Reference to drawings:

Reference to specs:

Division: 06 Section: 06 10 00

REMARKS:

REVIEW AND COMMENTS (for use by Consultants):

STANTEC PROJECT #: V:\1449\active\110126045\0200_arch\05_data_report\101: SUBMITTAL # SU-010

This review by Stantec is for general conformance with the design concept of Stantec's design of the:

☑ Architectural ☐ Electrical
☐ Structural ☐ Other
☐ Mechanical

component(s) only and does not mean that Stantec has verified or approves the shop drawing(s). The Contractor remains solely responsible for the shop drawing(s) and this review by Stantec does not relieve the Contractor of the Contractor's responsibility for errors or omissions in the shop drawing(s) or for meeting all requirements of the contract documents. This review does not mean that Stantec approves the detailed design inherent in the shop drawing, responsibility for which shall remain with the Contractor submitting same, nor does this review mean that Stantec accepts any deviation of the shop drawing(s) from the contract documents. The Contractor is responsible for confirming all dimensions and correlating them at the job site, for all construction means, methods and techniques, and for coordination of construction work of all trades, including coordination of all shop drawings.

Stantec

☑ REVIEWED

☐ REVIEWED, AS NOTED

☐ REVISE AND RESUBMIT

☐ NOT REVIEWED

DATE 2018-06-12

BY Jason King

Review of this submission is for compliance with general intent of the contract. This review does not relieve the Sub-Contractor, Supplier or Manufacturer of responsibility for error or omissions in the submission or the responsibility of meeting all requirements of the contract documents. Any deviation from the contract documents initiated by the Sub-Contractor, Supplier or Manufacturer shall be at their sole risk. QUANTITIES AND DETAIL DIMENSIONS ARE THE SUB-CONTRACTORS OR SUPPLIERS RESPONSIBILITY. VERIFY DATA WITH FIELD DIMENSIONS.

SUBMITTAL TRACKING No.: **SU-010**

2018-06-12

06 10 00 item 2.2.5

GOODFELLOW **Technical Data**

PRONATURE *Treated Wood*

plywood on foundation

Goodfellow ProNature is pressure treated with Alkaline Copper Quaternary compounds (ACQ). The main active ingredients are copper and quaternary compounds. Copper has long been known to be an effective wood preservative. Copper and quaternary compounds together provide a broad spectrum of long-term protection for wood exposed in exterior applications.

Preservative	Alkaline Copper Quaternary Compounds (ACQ)	
Brand Name	Goodfellow ProNature Treated Wood	
Chemistry – Purpose	Copper – termite, fungal decay Quat – organic co-biocide for copper-tolerant fungi	
Application / Commodity	Use Category	Preservative Retention*
Above Ground Use		
• Fence Boards	UC3.2A	0.125 pounds per cubic foot (pcf)
• Decking and Railing Components	UC3.2B	0.125 pcf
• Joist and Beams	UC3.2C	0.25 pcf
• Exterior Sheathing	UC3.2	0.25 pcf
Ground Contact / Freshwater Use		
• Deck/Fence Posts, Landscape Timbers	UC4.1D	0.40 pcf
• Exterior Sheathing	UC4.1	0.40 pcf
Colour	Green	
Additives	May contain mold inhibitor	

* Preservative retentions recommended by the Canadian Standards Association.

Cut Ends / Field Cuts	For **ground contact applications**, two applications of a brush-on copper naphthenate-based end-cut preservative must be applied to all saw cuts, drill holes and other field cuts at the time of construction before the wood is installed. For **above ground applications**, such as deck boards, railings, post tops or fencing boards, a brush on end-cut wood preservative or Timber Specialties Cut-N-Seal® product must be applied to all saw cuts, drill holes and other field cuts at the time of construction. Follow the manufacturer's directions for proper application.
Fasteners & Hardware	**Use corrosion-resistant fasteners –** Goodfellow ProNature Treated Wood products are designed for long-term performance in outdoor applications and, therefore, require high quality, corrosion resistant nails, screws, and hardware. Use hot-dip galvanized (conforming to ASTM Standards: ASTM-A153 for hot-dip fasteners and ASTM-A653, Coating Designation G-185 for hot-dip connectors and sheet products), stainless steel, or other fasteners and hardware as recommended by the hardware manufacturer. Direct contact of Goodfellow ProNature Treated Wood with aluminum products is not recommended. For more information, request a *Goodfellow ProNature Treated Wood Fastener and Hardware Information* Sheet.
Safe Handling Practices	Wear dust mask, goggles and gloves when cutting, sanding and handling wood. Some preservative may migrate from the treated wood into soil, water or other surfaces. It may also dislodge from the treated wood surface upon contact with skin. Wash exposed skin areas thoroughly. Wash work clothes separately from other household clothing before reuse.
Finishing	High quality water repellent or stain can be applied as soon as wood is dry to the touch.
Maintenance	Apply a high quality water repellent or stain to maintain the surface of the wood. Clean dirt and debris from the wood surface, as required.
Disposal	Clean up all sawdust and debris after construction. **Do not burn treated wood.** **Residential users** – trash collection or burial. **Commercial users** – in accordance with local, provincial and federal regulations.

Cut-N-Seal is a registered trademark of Koppers Performance Chemicals Inc.

SUBMITTALS IDENTIFICATION SHEET

PROJECT: Wastewater Treatment Plant Upgrade
Iqaluit, Nunavut

NUNAMI
STANTEC LIMITED
1088C Noble House
Iqaluit NU
www.stantec.com

CONTRACTOR: Kudlik Construction Ltd, Project 2018-062

Telephone: 867-979-1166

E-mail: srousseau@kudlik.biz

SUBCONTRACTOR:

Person responsible:

Telephone: () E-mail:

PRODUCT SUBMITTED:

☑ As Specified

☑ Alternate

SUPPLIER or MANUFACTURER: DSF

685 avenue Newton, Québec, QC G1P 4C4

Person responsible: Michel Barnard

Telephone: mbarnard@dsfltee.com

DESCRIPTION OF SUBMITTAL: insulation

# of pages:

Reference to drawings:

Reference to specs:

Division: 07 Section: 07 21 13

REMARKS:

REVIEW AND COMMENTS (for use by Consultants):

STANTEC PROJECT #: 110126045

SUBMITTAL # SU-011rev1

This review by Stantec is for general conformance with the design concept of Stantec's design of the:

☑ Architectural ☐ Electrical
☐ Structural ☐ Other
☐ Mechanical

component(s) only and does not mean that Stantec has verified or approves the shop drawing(s). The Contractor remains solely responsible for the shop drawing(s) and this review by Stantec does not relieve the Contractor of the Contractor's responsibility for errors or omissions in the shop drawing(s) or for meeting all requirements of the contract documents. This review does not mean that Stantec approves the detailed design inherent in the shop drawing, responsibility for which shall remain with the Contractor submitting same, nor does this review mean that Stantec accepts any deviation of the shop drawing(s) from the contract documents. The Contractor is responsible for confirming all dimensions and correlating them at the job site, for all construction means, methods and techniques, and for coordination of construction work of all trades, including coordination of all shop drawings.

Stantec

☑ REVIEWED

☐ REVIEWED, AS NOTED

☐ REVISE AND RESUBMIT

☐ NOT REVIEWED

DATE 2018-06-22

BY Jason King

Review of this submission is for compliance with general intent of the contract. This review does not relieve the Sub-Contractor, Supplier or Manufacturer of responsibility for error or omissions in the submission or the responsibility of meeting all requirements of the contract documents. Any deviation from the contract documents initiated by the Sub-Contractor, Supplier or Manufacturer shall be at their sole risk. QUANTITIES AND DETAIL DIMENSIONS ARE THE SUB-CONTRACTORS OR SUPPLIERS RESPONSIBILITY. VERIFY DATA WITH FIELD DIMENSIONS.

SUBMITTAL TRACKING No.: **SU-011 r1**

2018-06-22

ROXUL ComfortBoard 110

Technical Data Sheet
Board Insulation 05080*
Board Insulation 07 21 13**

ROXUL COMFORTBOARD™ 110

Insulated Sheathing

Product Description & Application

ROXUL COMFORTBOARD™ 110 is a rigid mineral wool, non-structural insulated sheathing board used as continuous insulation in high performance wall systems.

	Performance		Test Standard
Compliance	Mineral Fiber Block and Board Thermal Insulation - Type IVB Compliant Mineral Fibre Thermal Insulation for Buildings - Type 1 Compliant		ASTM C612 CAN/ULC S702
Reaction to Fire	Flame spread index = 0 ; Smoke developed index = 0 Flame spread index = 0 ; Smoke developed index = 0 Determination of Non Combustibility of Building Materials - Non Combustible		ASTM E84 (UL 723) CAN/ULC S102 CAN/ULC S114
Density	Actual Density - 11 lbs/ft³ (176 kgs/m³)		ASTM C303
Corrosion Resistance	Stress Corrosion Cracking Tendency of Austenitic Stainless Steel - Passed Corrosion of Steel - Passed Corrosion to Aluminum - Passed		ASTM C795 ASTM C665 ASTM C665
Thermal Resistance	R-Value / inch @ 75°F RSI value / 25.4mm @ 24°C	4.0 hr.ft2.F/Btu 0.70 m2K/W	ASTM C518 (C177)
Reaction to Moisture	Moisture Sorption - 0.28% Water Vapor Transmission, Desiccant Method - 2160ng/Pa.s.m2 (35 perm) Water Absorption - 1.2% Determination of Fungi Resistance - Passed		ASTM C1104 ASTM E96 ASTM C209 ASTM C1338
Compressive Strength	584psf (28kPa) @ 10% compression 1566psf (75kPa) @ 25% compression		ASTC C165
Thickness Dimensions	1" (25.4mm), 1.25" (32mm), 2" (50.8mm), 3" (76.2mm) 24"x48" (610mm x 1219mm), 48"x72" (1219mm x 1829mm)		

4 layers

Acoustical Performance	Thickness	125 Hz	250 Hz	500 Hz	1000 Hz	2000Hz	4000 Hz	NRC	ASTM C423
	1"	0.13	0.49	0.85	0.89	0.89	0.97	0.8	
	2"	0.5	0.71	0.85	0.9	0.96	1.01	0.85	

Issued 04-01-16
Supersedes 04-09-2013

NOTE: *Mast Format 1995 Edition **Master Format 2004 Edition. As ROXUL Inc has no control over installation design and workmanship, accessory materials or application conditions, ROXUL Inc. does not warranty the performance or results of any installation containing ROXUL Inc's products. ROXUL Inc's overall liability and the remedies available are limited by the general terms and conditions of sale. This warranty is in lieu of all other warranties and conditions expressed or implied, including the warranties of merchantability and fitness for a particular purpose.

ROXUL®
The Better Insulation™

ROXUL INC
8024 Esquesing Line
Milton, On. L9T 6W3
tel: 800-265-6878
fax: 800-991-0110
www.roxul.com

SUBMITTALS IDENTIFICATION SHEET

PROJECT: Wastewater Treatment Plant Upgrade
Iqaluit, Nunavut

NUNAMI
STANTEC LIMITED
1088C Noble House
Iqaluit NU
www.stantec.com

CONTRACTOR: Kudlik Construction Ltd, Project 2018-062

Telephone: 867-979-1166

E-mail: srousseau@kudlik.biz

SUBCONTRACTOR:

Person responsible:

Telephone: () E-mail:

PRODUCT SUBMITTED:

☑ As Specified

☐ Alternate

SUPPLIER or MANUFACTURER: Canac

Person responsible:

Telephone: E-mail: patrick.belanger@canac.ca

DESCRIPTION OF SUBMITTAL: fire retardant treated wood

# of pages:

Reference to drawings:

Reference to specs:

Division: 07 Section: 07 27 10

REMARKS:

REVIEW AND COMMENTS (for use by Consultants):

STANTEC PROJECT #: 110126045

SUBMITTAL # SU-012

This review by Stantec is for general conformance with the design concept of Stantec's design of the:

☑ Architectural ☐ Electrical
☐ Structural ☐ Other
☐ Mechanical

component(s) only and does not mean that Stantec has verified or approves the shop drawing(s). The Contractor remains solely responsible for the shop drawing(s) and this review by Stantec does not relieve the Contractor of the Contractor's responsibility for errors or omissions in the shop drawing(s) or for meeting all requirements of the contract documents. This review does not mean that Stantec approves the detailed design inherent in the shop drawing, responsibility for which shall remain with the Contractor submitting same, nor does this review mean that Stantec accepts any deviation of the shop drawing(s) from the contract documents. The Contractor is responsible for confirming all dimensions and correlating them at the job site, for all construction means, methods and techniques, and for coordination of construction work of all trades, including coordination of all shop drawings.

Stantec

☑ REVIEWED

☐ REVIEWED, AS NOTED

☐ REVISE AND RESUBMIT

☐ NOT REVIEWED

DATE 2018-06-15

BY Jason King

Review of this submission is for compliance with general intent of the contract. This review does not relieve the Sub-Contractor, Supplier or Manufacturer of responsibility for error or omissions in the submission or the responsibility of meeting all requirements of the contract documents. Any deviation from the contract documents initiated by the Sub-Contractor, Supplier or Manufacturer shall be at their sole risk. QUANTITIES AND DETAIL DIMENSIONS ARE THE SUB-CONTRACTORS OR SUPPLIERS RESPONSIBILITY. VERIFY DATA WITH FIELD DIMENSIONS.

SUBMITTAL TRACKING No.: **SU-012**

2018-06-14



The science of better-performing buildings.

DUPONT®

Tyvek®

Small detail. Big impact.

Of the hundreds of decisions you and your team make every day, choosing a weather barrier system containing either DuPont™ Tyvek® CommercialWrap® or Tyvek® CommercialWrap® D is one of the easiest things you can do to make a significant difference in energy efficiency and overall building performance.

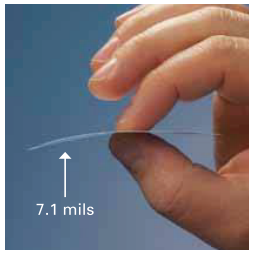

DuPont™ Tyvek® is a tough, spunbonded polyethylene membrane with microscopic pores that resist bulk water and air penetration while allowing moisture vapor to pass through.

Return on investment
DuPont™ Tyvek® weather barriers are a simple, cost-effective way to reduce operating costs and increase energy efficiency.

By controlling airflow, holding out bulk water and allowing interior moisture vapor to escape, DuPont™ Tyvek® weather barriers reduce the energy needed to heat and cool buildings—and create a more sustainable, durable structure that continues to operate efficiently, year after year.

Easy decision. Even easier installation.
From helping you understand how the weather barrier system works to supervising installation, we're here to help. Our dedicated network of DuPont™ Tyvek® Specialists have the building science expertise and job-site experience to make sure the job is done right.

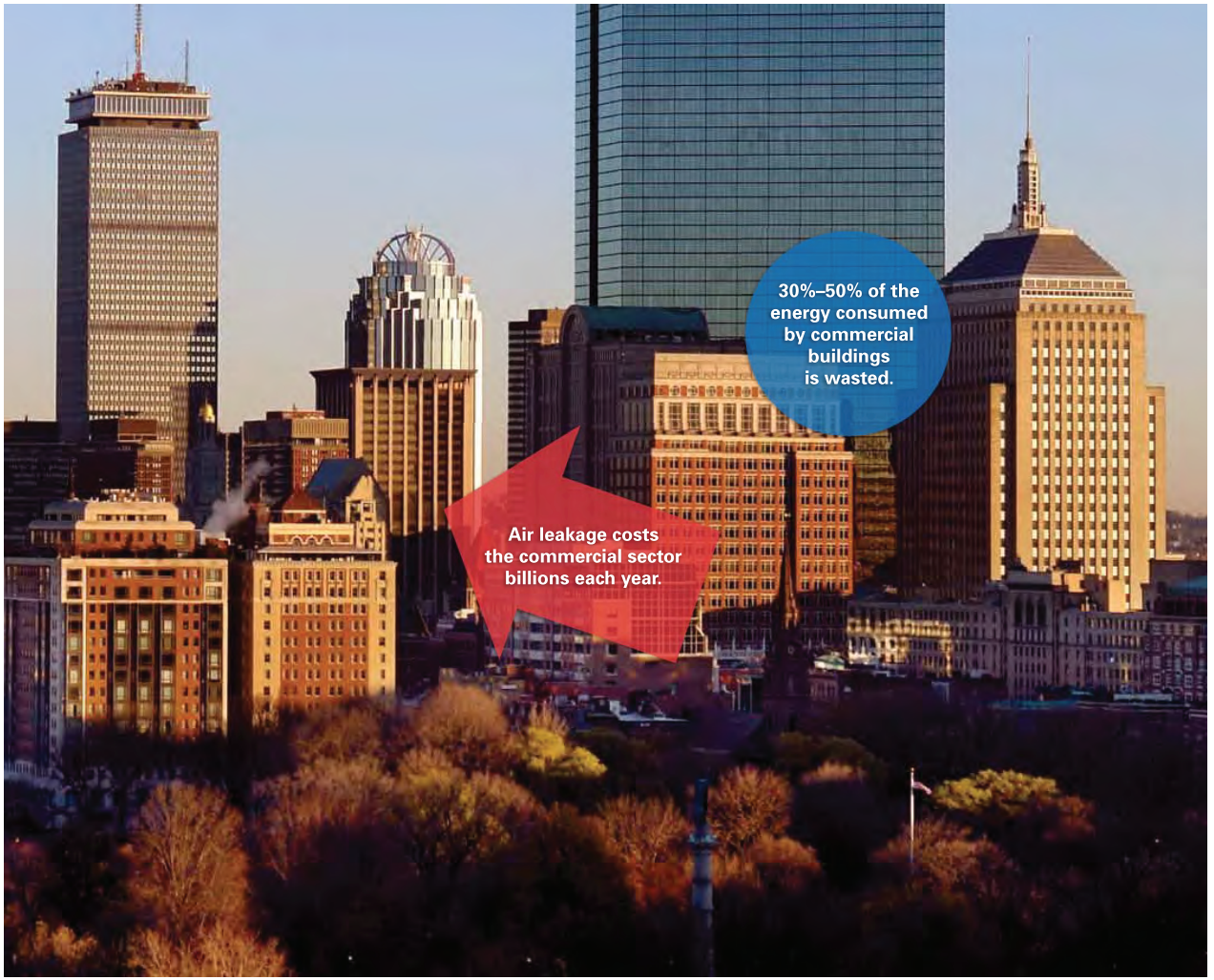

A 2005 National Institute of Standards and Technology study* indicated that a weather barrier system such as DuPont™ Tyvek® CommercialWrap® can reduce building air leakage by as much as 85%—realizing up to 40% savings in natural gas and up to 25% savings in electricity, annually.

*NISTIR 7238 U.S. Department of Energy, June 2005, by S.J. Emmerich, T. McDowell and W. Ains.

Improved energy efficiency.

DuPont Weatherization Systems products help seal the building envelope, keeping drafts and wind out of wall cavities to help reduce the energy needed for heating and cooling.

Meet increasing energy codes today
Energy codes that recognize the importance of sealed buildings and energy efficiency continue to gain acceptance.

Several states have developed legislation on air barriers, as well as compliance criteria. DuPont Weatherization Systems products help you meet imminent code requirements today.

Air leakage rate standards

Codes and regulations	Compliance requirements: air infiltration, cfm/ft²			
	Material ASTM E2178		Assembly ASTM E1677/ASTM 2357	Whole building*** ASTM E779
The National Building Code of Canada (1995 NBC)	0.004		—	—
Massachusetts Energy Code (July 2001)	0.004		—	—
Minnesota Energy Code (2009)	0.004		—	—
New Hampshire Energy Code (2009)	0.004		—	—
Georgia Energy Code (2009)	0.004		—	—
Rhode Island Energy Code (2009)	0.004		—	—
Oregon Energy Code (2009)	0.004		—	—
ASHRAE 90.1* & 189**	0.004	or	0.04**	—
U.S. Army Corps of Engineers	—		—	0.25

*ASHRAE 90.1 AB Proposal in progress, targeted for ASHRAE 90.1 2010.
**ASHRAE 189, Sustainable Building Standard—in progress.
***ASHRAE Proposal; U.S. Army Corps of Engineers (USACE) Standard.

Earn LEED® credits
By helping seal the building envelope for improved energy efficiency and air quality, DuPont Weatherization Systems products help contribute toward LEED® (Leadership in Energy and Environmental Design) credits in the following categories:

- Energy & Atmosphere
- Indoor Environmental Quality



In the United States alone, buildings account for 30% of all greenhouse gas emissions,[1] 65% of electricity consumption,[2] 30% of raw materials use[3] and 36% of total energy use.[1]

1. U.S. Department of Energy, Energy Information Administration, "Emissions of Greenhouse Gases in the United States 1999."
2. U.S. Department of Energy, Energy Information Administration, March 2001, Monthly Energy Review.
3. Lenssen and Roodman, 1995, "Worldwatch Paper 124: A Building Revolution: How Ecology and Health Concerns are Transforming Construction," Worldwatch Institute.

Performance in any climate.

While construction materials and practices may vary by region, the need for energy savings is universal. Fortunately, the unique balance of properties and superior vapor permeability of DuPont Weatherization Systems products make them equally effective across a wide range of challenging environments.

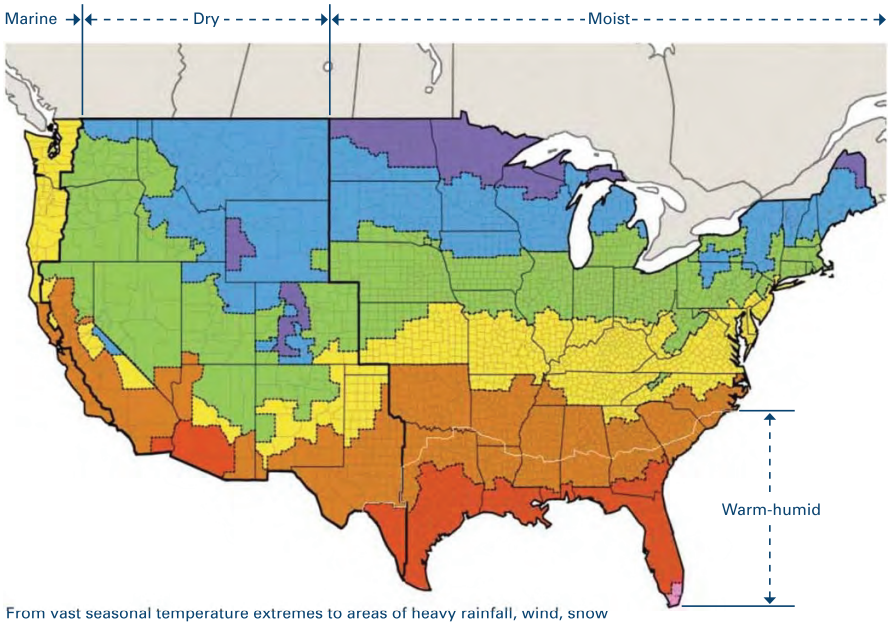

From vast seasonal temperature extremes to areas of heavy rainfall, wind, snow or humidity, DuPont Weatherization Systems products are scientifically engineered to improve building performance under any conditions. By helping stop air flow through walls, holding out bulk water and allowing moisture vapor to escape from within, DuPont™ Tyvek® CommercialWrap® and Tyvek® CommercialWrap® D work to improve energy efficiency year-round.

*Map courtesy of ASHRAE 90.1 climate zone maps.



Improves air control for greater energy savings
Reduces air leakage and helps protect the installed R-value of insulation for greater energy savings, making it ideal for cold climates.



Superior water hold-out
Helps keep out water and wind-driven rain, an ideal solution in regions with heavy precipitation.



Effective across a wide range of temperatures
Helps ensure energy savings in every season, especially in regions that experience wide changes in temperature and extreme climate conditions.



Allows moisture vapor to escape
Combines superior bulk water hold-out with vapor permeability that allows moisture vapor to escape, helping prevent moisture accumulation in walls that can lead to the formation of mold and mildew.

Performance with any design.

DuPont Weatherization Systems products are designed to integrate seamlessly under a wide variety of commercial facades, including: stucco, stone, marble, metal panels, brick, granite and EIFS (synthetic stucco).

Walls are no obstacle, either. That's because DuPont™ Tyvek® weather barriers are durable, flexible membranes that can be easily installed in a variety of different wall assemblies.

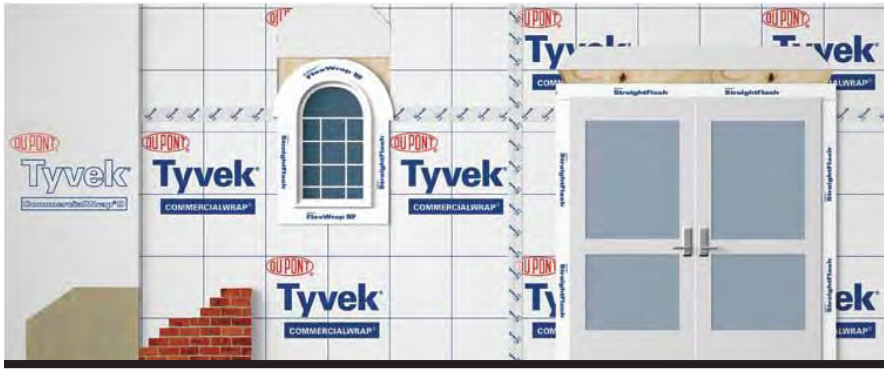

There is a DuPont™ Tyvek® weather barrier system for virtually every type of commercial construction, with products such as DuPont™ Tyvek® CommercialWrap®, Tyvek® CommercialWrap® D, Tyvek® Tape, Tyvek® Wrap Caps and DuPont™ Flashing Systems.

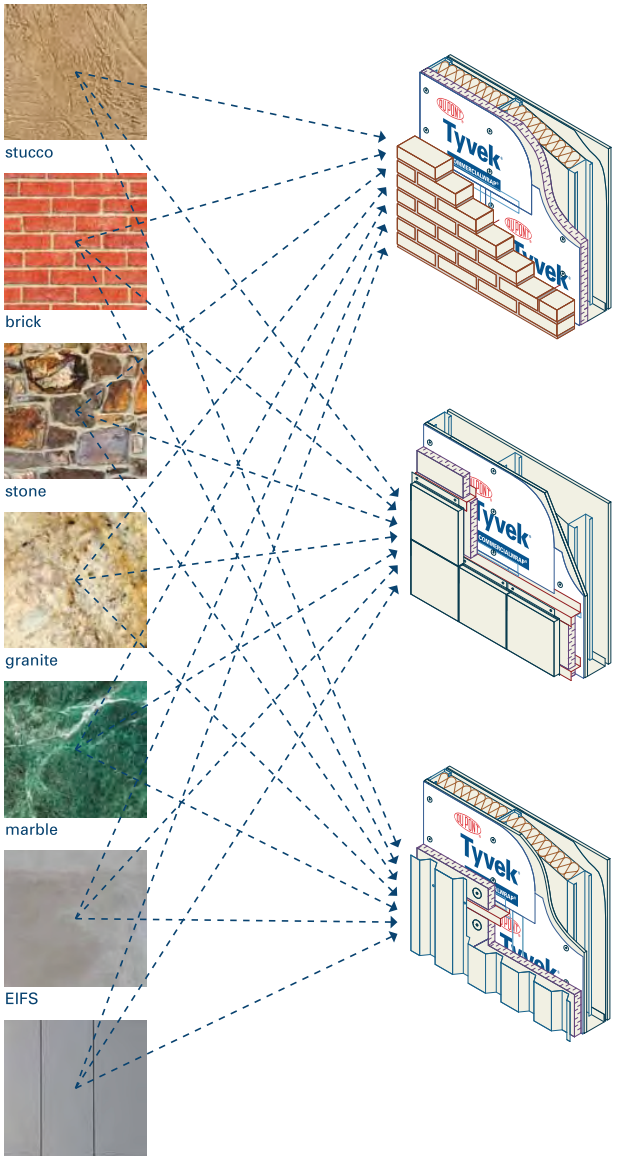

Interior (cavity) insulation
The interior insulation wall design has the thermal insulation within the wall cavity, i.e., the batt insulation within the stud cavity. Either DuPont™ Tyvek® CommercialWrap® or Tyvek® CommercialWrap® D is installed on the exterior face of the exterior sheathing to help prevent bulk water penetration and help reduce air flow.

Exterior insulation
The thermal insulation is placed outside the wall cavity, with rigid insulation outside of the exterior sheathing (more commonly used in cold climates). In this instance, DuPont™ Tyvek® CommercialWrap® or Tyvek® CommercialWrap® D can be either sandwiched between the exterior sheathing and the exterior rigid insulation, or installed outside of the exterior rigid insulation, depending on whether the insulating materials are sensitive to water or air flow.

Composite design (interior & exterior insulation)
Composite, or combination, wall design includes both batt insulation and rigid exterior insulation. DuPont™ Tyvek® CommercialWrap® or Tyvek® CommercialWrap® D can be installed between the exterior sheathing and the exterior rigid insulation, or outside of the exterior rigid insulation, depending on construction.

The right balance of properties leads to better performance.

All four barrier properties—durability, air resistance, water resistance and vapor permeability—are critical for managing air and moisture movement through a building envelope and for ensuring material performance in the application. However, competing demands make it difficult for most materials to achieve this balance.

Most products rate high in only one or two properties. For example, an increase in vapor permeability is achieved at the expense of performance in water resistance and/or air infiltration resistance. Conversely, an increase in air and/or water resistance is achieved at the expense of performance in vapor permeability.

Only DuPont™ Tyvek® CommercialWrap® and Tyvek® CommercialWrap® D deliver the best balance of properties to help you create sustainable buildings that cost less to operate, are easier to maintain and provide better comfort, year-round.



With superior tear-resistance and 9-month UV protection, DuPont Weatherization Systems products also stand up to even the toughest job-site conditions.



durability

Provides excellent tear strength and 270 days of UV protection.

air resistance

Helps protect insulation from drafts, reducing energy costs.

water resistance

Helps prevent water from entering walls, avoiding costly damage.

vapor permeability

Allows moisture vapor to escape, helping create a healthier indoor air environment.

An integrated system for maximum performance.



DuPont Weatherization Systems products integrate seamlessly to help seal the building envelope for more durable, healthy and energy-efficent buildings.

Membranes

DuPont™ Tyvek® CommercialWrap®

Engineered to provide excellent performance as a weather barrier, DuPont™ Tyvek® CommercialWrap® offers the added strength and durability needed in commercial construction by offering 270 days of UV resistance. It also helps to deliver the best balance of weather protection, air and moisture management, and energy savings.

DuPont™ Tyvek® CommercialWrap® D

A premium, durable weather barrier that offers a specially engineered surface texture designed to provide superior water drainage under a variety of facades. It offers a high tear and wind load resistance and 270 days of UV resistance to deliver the best balance of weather protection, air and moisture management, and energy savings.

DuPont™ Tyvek® ThermaWrap™

A durable weather barrier with a low-emissivity metallized surface designed to manage radiant heat flow by reflecting solar radiation away from the building to help improve energy efficiency and reduce heating and cooling costs. Offers 120 days of UV resistance.

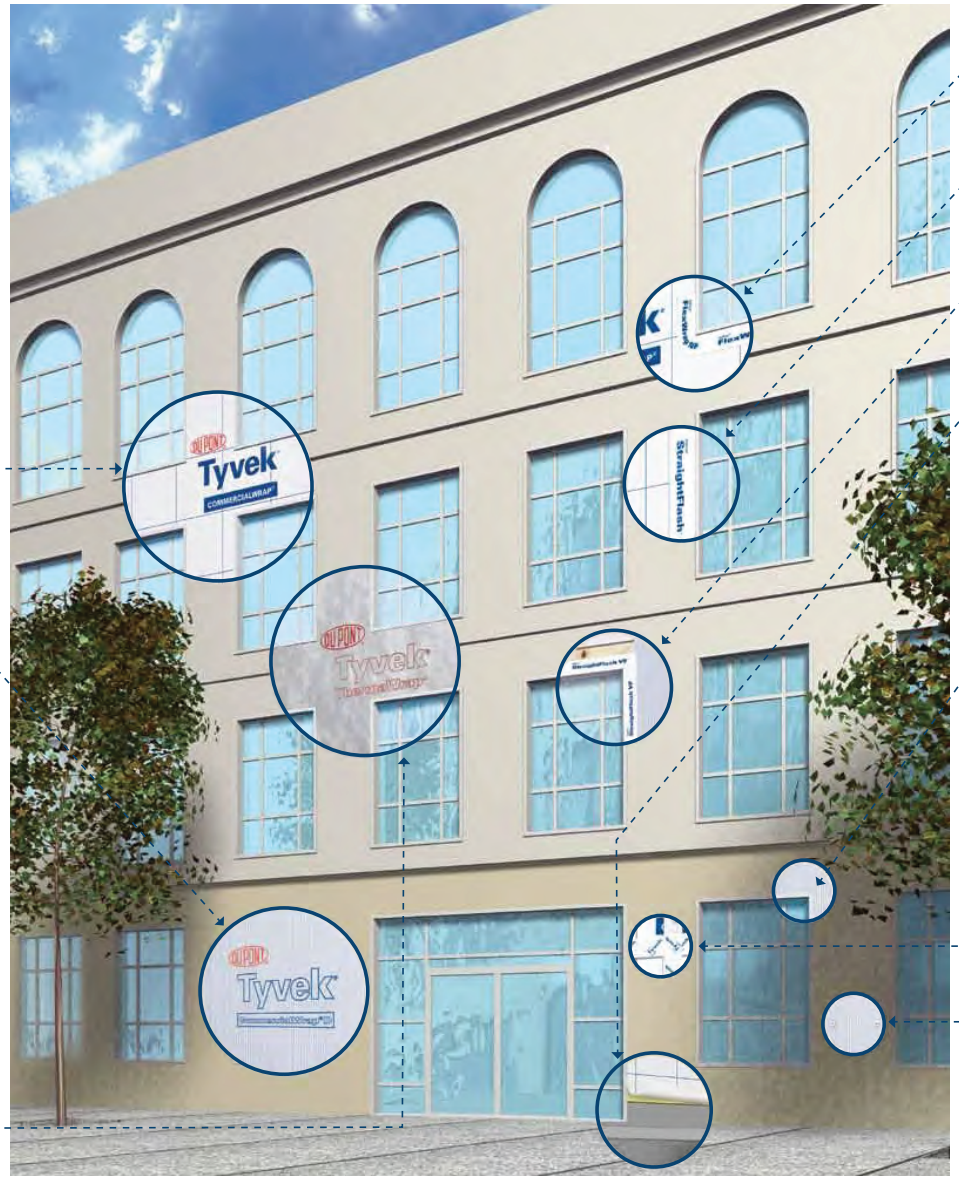

DuPont™ Flashing Systems

DuPont™ FlexWrap™ NF

A premium performance, extendable self-adhered flashing material that can be applied over a wide range of building substrates.

DuPont™ StraightFlash™

A premium, durable, self-adhered flashing material for straight jambs and heads of rectangular windows to help prevent water damage from wind-driven rain.

DuPont™ StraightFlash™ VF

An innovative, dual-sided, self-adhered flashing material for brick mold and non-flanged windows and doors, designed to prevent water damage from wind-driven rain.

DuPont™ Thru-Wall Flashing

A durable, flexible, self-adhered flashing material made with DuPont™ Elvaloy® copolymer helps to manage water away from the building envelope by providing superior drainage control around commercial building foundations and other critical transition areas.

Accessories

DuPont™ Commercial Sealant

A durable, highly flexible sealant that helps to protect against air and water infiltration at critical interface areas, such as window and door installations and other commercial construction applications.

DuPont™ Tyvek® Tape

Specially engineered adhesive tape for use with DuPont Weatherization Systems products creates a continuous barrier, providing maximum reduction of air and water infiltration through the building envelope.

DuPont™ Tyvek® Wrap Caps

The recommended fastening method designed to provide optimal holding power when securing DuPont Weatherization Systems products in commercial buildings.

Superior products. Unparalleled field support.

Because you have a multitude of other concerns when designing and constructing a building, we're committed to making it as easy as possible for you to specify and install DuPont Weatherization Systems products—including hands-on job-site training, a 10-year limited warranty, and opportunities for continuing education credits in building science.



The DuPont™ Tyvek® Specialist Network
The DuPont™ Tyvek® Specialist Network is an elite team of highly trained field representatives, including a group that is focused specifically on commercial building applications.



Unparalleled Expertise
These commercial Specialists participate in a five-year certification process that includes a university-level curriculum and rigorous testing in product knowledge and building science. You can count on your DuPont™ Tyvek® Specialist to help you locate and specify a DuPont™ Tyvek® commercial dealer in your area and help ensure proper installation of DuPont Weatherization Systems products.



DuPont Weatherization Systems Products 10-Year Limited Warranty
DuPont™ Tyvek® weatherization products come backed by a limited, product-only warranty from DuPont, a company that has been dedicated to providing innovative and reliable products for more than 200 years. DuPont also offers a product and labor warranty option when certain requirements are met. One requirement of the product and labor warranty is a documented job-site checklist and observation process, conducted by a DuPont™ Tyvek® Specialist, to help you ensure that your DuPont Weatherization Systems products are installed properly.



Continuing Education
To help you stay current on building practices and specifications, your local DuPont™ Tyvek® Specialist offers AIA-CES and CSI-CEN Learning Units for a broad range of continuing education requirements.

DuPont building science.

A building is a testament to the people who work hard to design, develop and build it. DuPont building science plays a large role in helping you create buildings that are sounder; look newer, longer; and provide greater environmental sustainability.

We put our rich history of research and discovery to work every day to deliver science-based solutions for better buildings and a better world. You trust our products for their forward-looking innovation, the quality they represent and because they set the standard in each category—and we don't take that trust lightly. That's why we're committed to the continual development of innovative products with integrated systems and services—so you can continue to deliver buildings that are better through science.



DuPont Weatherization Systems
www.Weatherization.Tyvek.com
1-800-44-Tyvek



DuPont™ SentryGlas®
www.dupont.com/safetyglass
1-800-438-7225



DuPont™ Zodiaq® quartz surfaces
www.zodiaq.com
1-800-436-6072



DuPont Photovoltaic Solutions
www.photovoltaics.dupont.com
1-800-448-9835



DuPont™ Sorona® Fiber
www.sorona.dupont.com
1-866-476-7662



DuPont Refrigerants
www.refrigerants.dupont.com
1-800-235-7882



DuPont Cabling Solutions
www.dupont.com/cablingsolutions
1-866-383-5623



DuPont™ Corian® solid surfaces
www.corian.com
1-800-436-6072



DuPont Filtration Solutions
www.SeparationsSolutions.dupont.com
1-800-448-9835

DuPont Building Innovations
1-800-44-Tyvek
www.Weatherization.Tyvek.com

The miracles of science™

Copyright © 2010 DuPont. The DuPont Oval Logo, DuPont®, The miracles of science™, CommercialWrap®, Corian®, FlexWrap™, SentryGlas®, Sorona®, StraightFlash™, StuccoWrap®, ThermaWrap™, Tyvek®, and Zodiaq® are trademarks or registered trademarks of E.I. du Pont de Nemours and Company or its affiliates. All rights reserved. LEED® is a registered trademark of the U.S. Green Building Council. K-05002-1 3/10

SUBMITTALS IDENTIFICATION SHEET

PROJECT: Wastewater Treatment Plant Upgrade
Iqaluit, Nunavut

NUNAMI
STANTEC LIMITED
1088C Noble House
Iqaluit NU
www.stantec.com

CONTRACTOR: Kudlik Construction Ltd, Project 2018-062

Telephone: 867-979-1166

E-mail: srousseau@kudlik.biz

SUBCONTRACTOR:

Person responsible:

Telephone: () E-mail:

PRODUCT SUBMITTED:

☑ As Specified

☐ Alternate

SUPPLIER or MANUFACTURER: Cascadia

Person responsible: Larry Shoesmith

Telephone: 604-857-4600 E-mail: larry@pilotgroup.ca

DESCRIPTION OF SUBMITTAL: Cascadia clip

# of pages:

Reference to drawings:

Reference to specs:

Division: 06 Section: 06 75 00

REMARKS:

REVIEW AND COMMENTS (for use by Consultants):

Conditional approval for material only, proper shop drawings showing project specific installation, grid approved by cladding engineer with stamp still to be provided.

STANTEC PROJECT #: 110126045

SUBMITTAL # SU-014R1

This review by Stantec is for general conformance with the design concept of Stantec's design of the:

☑ Architectural ☐ Structural ☐ Mechanical ☐ Electrical ☐ Other

component(s) only and does not mean that Stantec has verified or approves the shop drawing(s). The Contractor remains solely responsible for the shop drawing(s) and this review by Stantec does not relieve the Contractor of the Contractor's responsibility for errors or omissions in the shop drawing(s) or for meeting all requirements of the contract documents. This review does not mean that Stantec approves the detailed design inherent in the shop drawing, responsibility for which shall remain with the Contractor submitting same, nor does this review mean that Stantec accepts any deviation of the shop drawing(s) from the contract documents. The Contractor is responsible for confirming all dimensions and correlating them at the job site, for all construction means, methods and techniques, and for coordination of construction work of all trades, including coordination of all shop drawings.

Stantec

☑ REVIEWED

☐ REVIEWED, AS NOTED

☐ REVISE AND RESUBMIT

☐ NOT REVIEWED

DATE 2018-06-18

BY Jason King

Review of this submission is for compliance with general intent of the contract. This review does not relieve the Sub-Contractor, Supplier or Manufacturer of responsibility for error or omissions in the submission or the responsibility of meeting all requirements of the contract documents. Any deviation from the contract documents initiated by the Sub-Contractor, Supplier or Manufacturer shall be at their sole risk. QUANTITIES AND DETAIL DIMENSIONS ARE THE SUB-CONTRACTORS OR SUPPLIERS RESPONSIBILITY. VERIFY DATA WITH FIELD DIMENSIONS.

SUBMITTAL TRACKING No.: **SU-014**

2018-06-15

06 75 00 item 2.1.1



ENERGY EFFICIENT
LOW COST
FAST INSTALLATION

CASCADIA CLIP®

FIBERGLASS THERMAL SPACER



CONTENTS

Thermal Modeling & Field Comparison	3
Cost Comparison	4
Installation	5
Combustibility + Code Compliance	6
Thermal Performance	7
Cascadia Clip® Calculator	8
Structural Performance	10
Engineering	11
Specifying	12
Standard Details	13

WHY FIBERGLASS?

The Cascadia Clip® cladding support system for exterior insulated walls improves energy efficiency and lowers construction cost. It separates steel girts from the back-up wall and allows the insulation value to be fully realized. This eliminates degradation of insulation value that occurs with traditional steel girts and clips.

EIGHT SIZES AVAILABLE

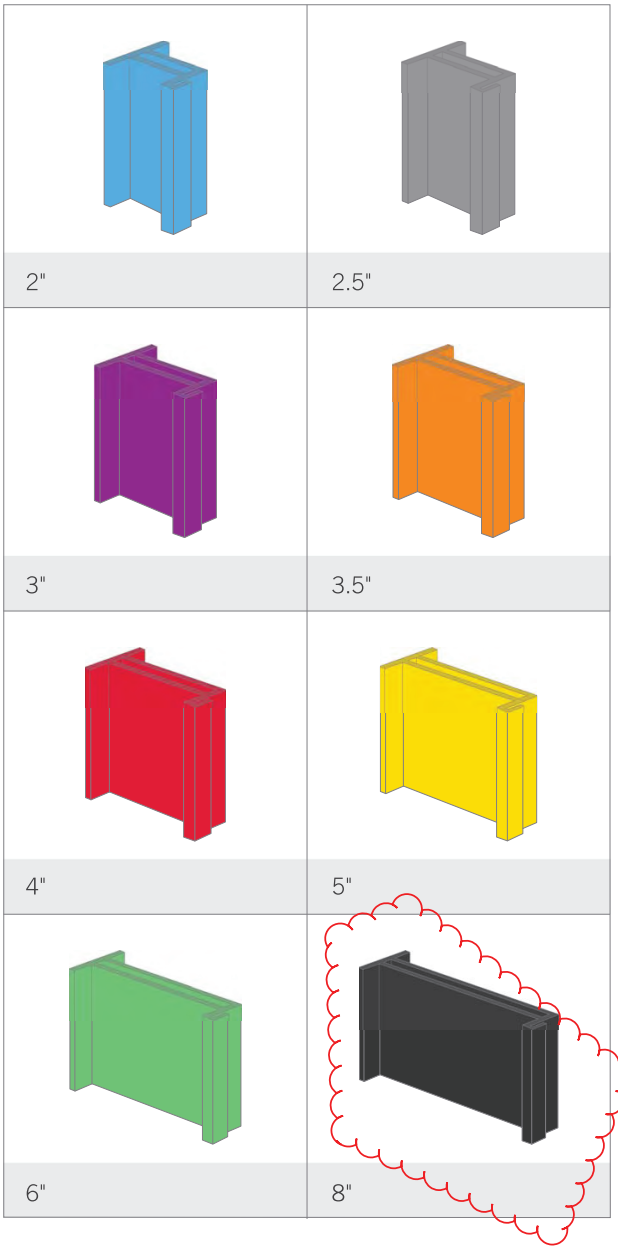

"The Cascadia Clip® wall is about cost-neutral to a single continuous Z-girt wall, but with twice the performance."

Ron Blankert, President, BJ Plastering

"This is what I really think is the definition of good green design. It is unobtrusive, it solves a serious problem, it is easy to use and does its job really well."

Lloyd Alter, Managing Editor, Toronto


sopra
SOPREMA

THERMAL MODELING & FIELD COMPARISON

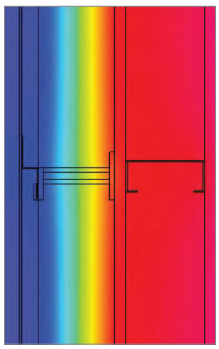

Cascadia Clip® system

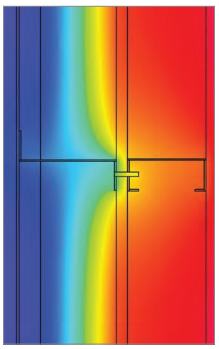

Typical Z-girt system

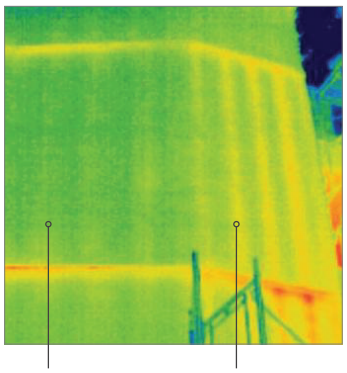

With Cascadia Clip® system

With typical Vertical Z-girt system

R-16.8 FT²·°F·HR/BTU*

Cascadia Clips® limit heat flow through wall.

*With 4" of mineral wool

*Whole-wall effective insulation value

*At 16" O.C horizontally + 36" vertically



A THERMAL WASHER

Because Cascadia Clips® are used to separate traditional Z-girts or hat tracks from the backup wall structure, they are universal to any type of cladding.

They will support any cladding that would normally be attached with these methods, or any other type of rail system.

PERFORMANCE

COST COMPARISON

CASCADIA CLIP® SYSTEM

R-16.8 EFFECTIVE Easily increased to R-28+

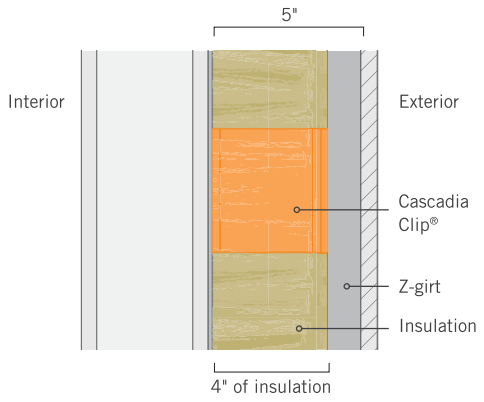

Cost of clips and girts — ~$0.13 per ft² / per R-value

Additional indirect costs

+ One layer of insulation

VERTICAL + HORIZONTAL DOUBLE GIRT SYSTEM

R-15 EFFECTIVE Not easily increased

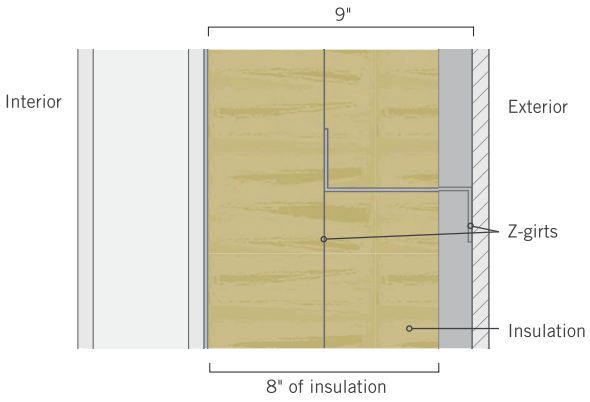

Cost of girts — ~$0.16 per ft² / per R-value

Additional indirect costs

+ Twice the insulation
+ Twice the labour
+ Twice the flashing
+ More lost floor space that the owner cannot use or sell

CONSTRUCT COST-EFFECTIVE HIGH R-VALUE WALLS

Since the effective R-value is extremely efficient compared to any other cladding support assembly, a much thinner wall will accomplish the same or better results.

The cost savings available from using Cascadia Clips® can be as much as $5 per square foot compared to other, more conventional cladding support systems that attempt to meet similar performance targets.

WHEN SPACING OF THE CLIPS IS OPTIMIZED, THE CASCADIA CLIP IS THE CHEAPEST $/R-VALUE OF ANY OTHER CLIP SYSTEM ON THE MARKET.

VERTICAL GIRT APPLICATION

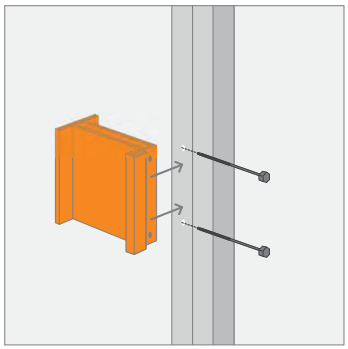

STEP 1
Attach clips to steel girt

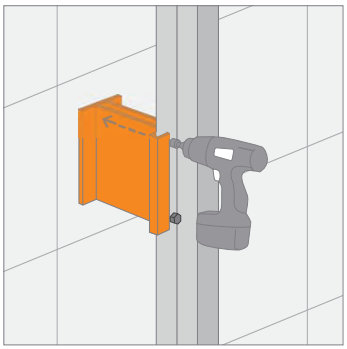

STEP 2
Fasten girts and clips to the wall with screws; long screws connect girts directly to the structure, passing through the clips

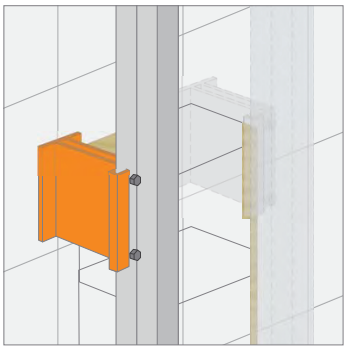

STEP 3
Install insulation and fasten next girt

HORIZONTAL TRACK APPLICATION

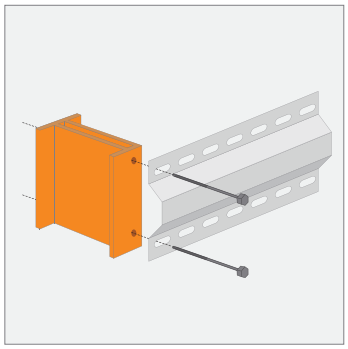

The Cascadia Clip® can be used with a horizontal hat-track; slotted tracks allow flexibility for aligning clips to studs

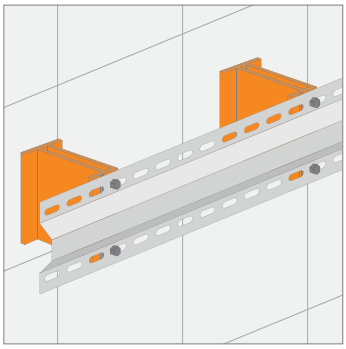

A simple and effective way to support vertically oriented cladding; fasteners will hold assembly together for installation convenience

ADJUSTABILITY

The Cascadia Clip now has accessories to handle uneven wall substrates. Please visit cascadiaclip.com or contact us for more info on the adjustable Cascadia Clip.

COMBUSTIBILITY

THE CASCADIA CLIP® IS **FULLY CODE-COMPLIANT** FOR FIRE PERFORMANCE IN BOTH CANADA AND THE USA FOR **EVERY** TYPE OF WALL ASSEMBLY.

1. The Clips are intermittent, both vertically and horizontally, and almost completely covered by non-combustible mineral wool. Because of this, they do not alter the wall's fire protection in any way – for better or for worse.
2. Fire does not damage the Clips' ability to hold the cladding in place, because cladding is attached to steel Z-girts which are attached directly to the backup wall with screws passing completely through the clip.

The fiberglass clips are not a structural connection for the cladding: the structural connection of cladding to backup wall is done via steel girts and screws.

CANADA

While fiberglass is combustible, the clip functions within non-combustible wall assemblies as a minor combustible component, in accordance with Article 3.1.5.2 of the Model National Building Code.

The clip is enclosed within the non-combustible insulation and the fasteners attach the cladding directly to the structure. Fire protection and building code professionals support the clip as a minor combustible component, in compliance with the building code.

The Building and Safety Standards Branch of the BC Ministry of Energy and Mines confirmed that the Cascadia Clip® is a minor combustible component, acceptable for use in non-combustible construction.

USA

The Cascadia Clip® has been approved through IAPMO for a Uniform Evaluation Service report, evaluating the Clip for use in projects across the USA, in all types of construction, including non-combustible wall assemblies. The IAPMO UES report evaluates the Clip for the 2012 and 2015 international Building Code, ensuring that the clips have met the most rigorous standards and are in full compliance. Using comprehensive fire-testing data, including a successful NFPA 285 report with combustible cladding, the evaluation approves the clip for use in non-combustible wall assemblies.

It also includes analysis and approval of durability, structural capacity, and more. Cascadia Clips® are the *only* thermally improved cladding support system with a code evaluation. Please contact us or visit our website for more information or a copy of this report!

THERMAL PERFORMANCE

	STEEL FRAMED		CONCRETE	WOOD FRAMED	
	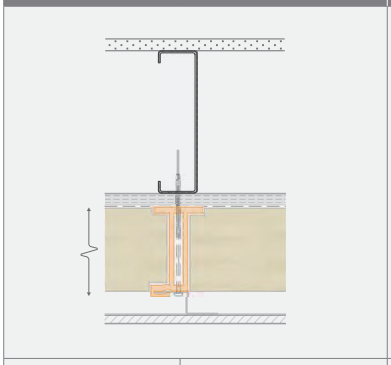		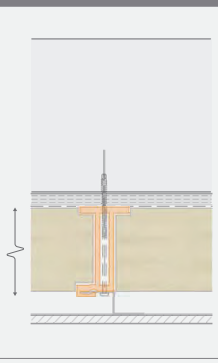	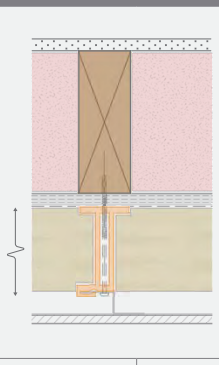	
	3⅝" (NO BATTS)	3⅝" (BATTS IN CAVITY)	6" CONCRETE	2X4 (BATTS IN CAVITY)	2X6 (BATTS IN CAVITY)
Clip / insulation depth (in.)	Effective R-values ($FT^2 \cdot °F \cdot HR/BTU$)				
2	10.9	16.7	9.7	20.6	26.4
2.5	12.1	18.4	11.5	22.7	28.4
3	13.7	20	13.1	24.2	30
3.5	15.3	21.7	14.8	26.2	32
4	16.8	23.4	16.5	27.8	33.7
5	19.8	26.6	19.8	31.2	37.1
6	22.7	29.7	23	34.6	40.4
8	28.5	36	29.5	41.2	47.1

- All results using exterior mineral fibre insulation (R4.2/inch).
- Steel studs are 18ga material.
- Steel and wood studs assuming clip spacing of 16" horizontally and 48" vertically.
- Concrete assuming clip spacing of 24" horizontally and 36" vertically.
- More effective R-value results based on different spacings and combinations of wall assemblies can be found on our website using our Cascadia Clip® Calculator.
- If allowed by the cladding, Cascadia Clips can be spaced out even further in many cases.

CALCULATOR

CASCADIA CLIP® CALCULATOR: CALCULATOR.CASCADIACLIP.COM

INPUTS

Backup Wall	2x4 Steel studs	Options of 16, 18, 20 gauge
	2x4 Wood studs	
	2x6 Wood studs	
	6" Concrete	
Batts in Cavity	Yes	Yes for wood, no for concrete, split insulation allowed for steel studs
	No	
Exterior Insulation	R4.2/inch – mineral wool	
	R6.2/inch – spray foam	
Fastener Type	Galvanized Steel	Standard offering
	Stainless Steel	Better thermal performance
Horizontal Spacing	16	Standard studs
	24	Suggested for concrete
	32	With light cladding, can go every other stud
Cladding Dead Load	1-20 psf	Have done projects up to 27psf

The online Cascadia Clip® Calculator helps you calculate the spacing required for your specific project.

You input the variables specific to your project, and use the outputs to find the smallest clip at the largest spacing that meets the project requirements for thermal performance and allowable wind loading. This helps you save money by using the right number of clips - not more, not less.

This tool is **fully engineered**, and when paired with the engineering reports that corroborate the results, can be used as the submittal documents.

There are over 75,000 combinations of walls, with thermal and structural results for each.

OUTPUTS

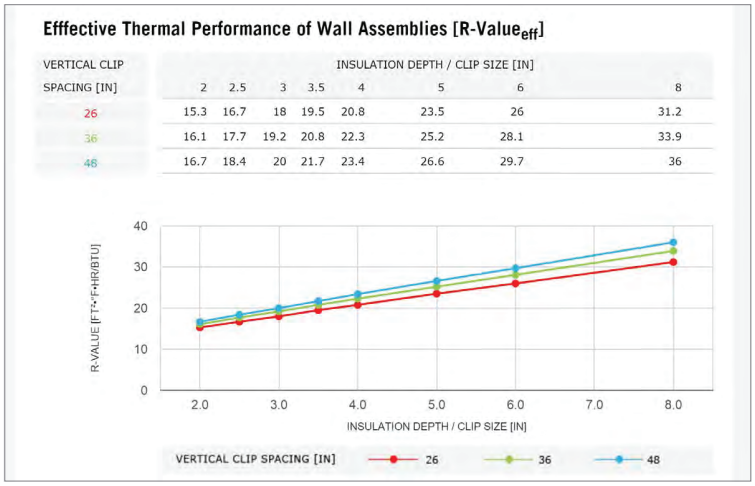

Tables and graph show the same thing in different formats. Values show the effective R-values of the wall assembly, based on the chosen inputs and combination of clip sizes and vertical spacing.

Example Thermal Output from Online Calculator

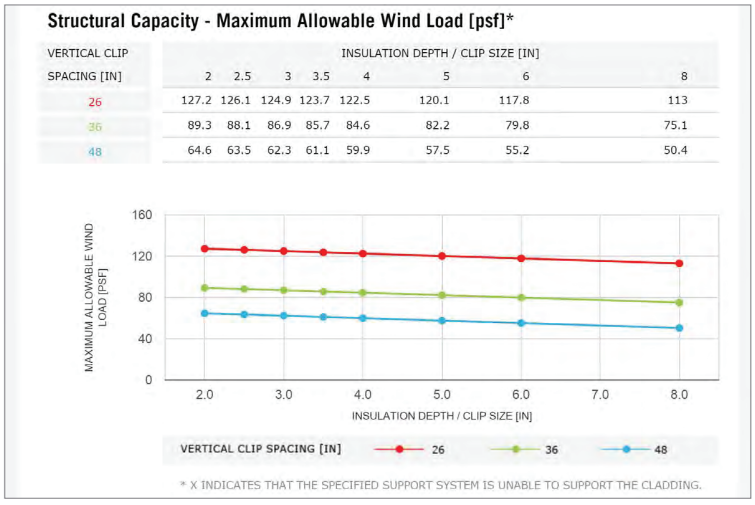

Tables and graph show the same thing in different formats. Values show the allowed suction wind pressures on the wall assembly, based on the chosen inputs and combination of clip sizes and vertical spacing. Built in safety factor of 3.0.

Example Structural Output from Online Calculator

Choose the smallest clip at the largest spacing that meets both the thermal and structural requirements of the project.

PREMISE OF STRUCTURAL DESIGN

The clips are intermittent and are sandwiched between continuous Z-girts to the outside and the sheathing of the back-up wall to the inside. The fasteners (two per clip) attach the Z-girts to the back-up wall studs, passing through holes in the clips. The clips and fasteners are required to resist vertical loads imposed by cladding weight, and horizontal loads imposed by wind pressures and inertial forces from earthquakes. Wind loads are assumed to govern lateral load scenarios.

Due to the intermittent nature of the clips, the dead load of the exterior cladding causes rotational force in the clip. This creates tension in the upper screw; the pull-out of this screw is the governing factor of the Cascadia Clip® design.

The pull-out force on the upper screw has two contributing factors

- Dead load of the cladding
- Negative wind pressure on the cladding

Assumptions

- All clips share vertical load equally
- Clips act independently to resist overturning



SCREW FASTENER DESIGN PARAMETERS

Sheathing thickness		12.7 mm	0.5 in	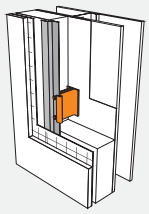
Vertical girt depth		25.4 mm	1 in	
Cladding thickness		19.05 mm	0.75 in	
Cascadia Clip® size	Depth	Varies	Varies	
	Length	101.6 mm	4.0 in	
	Screw edge distance	12.7 mm	0.5 in	
	Screw spacing	76.2 mm	3.0 in	

ALLOWABLE FASTENER LOADS (FACTOR OF SAFETY: 3.0)

STEEL STUD SUBSTRATE – RECOMMENDED FASTENER: LELAND INDUSTRIES – ¼ X 14 MASTER DRILLER NO.2 MINI DRILL POINT, DT 2000 COATED				
For 20 gauge studs	T_{ALLOW}	725 N	163 lb	Leland Industries – Manufacturer's Testing
	V_{ALLOW}	703 N	158 lb	Deitrich
For 18 gauge studs	T_{ALLOW}	1023 N	230 lb	Leland Industries – Manufacturer's Testing
	V_{ALLOW}	1041 N	234 lb	Deitrich
WOOD STUD SUBSTRATE – RECOMMENDED FASTENER: LELAND INDUSTRIES – ¼ X 10 MASTER GRIPPER, DT 2000 COATED				
Wood studs + plywood sheathing	T_{ALLOW}	979 N	220 lb	Values from Leland Master Gripper 14 x 10 with 1" effective penetration into Douglas Fir
	V_{ALLOW}	654 N	147 lb	
CONCRETE/CMU SUBSTRATE – RECOMMENDED FASTENER: LELAND INDUSTRIES – #14 X 15 CONCRETE SCREW, DT 2000 COATED				
4000 psi Concrete – 1.5" embedment	T_{ALLOW}	1370 N	308 lb	Intertek Testing of Leland Industries 14-15 concrete screws; predrilled holes at 3⁄16" diameter
Hollow Concrete Masonry Units – 1.0" embedment	T_{ALLOW}	672 N	151 lb	Intertek Testing of Leland Industries 14-15 concrete screws; predrilled holes at 3⁄16" diameter

TECHNICAL DETAILS

The design information provided in this brochure has been prepared based on a review of industry available screw pull-out and shear load test data, with resultant factors of safety in the connection design ranging from 3 to 4. The specific design curves included in the brochure are based on a FS of 3.0 utilizing the fasteners identified in the above chart as 'Recommended Fasteners' for each substrate type. It is important to note that in the design curves for applications in 20 ga and 18 ga steel framing, Leland's ¼" Master Driller screw with no.2 mini drill point is used, and provides greater capacity than common no.3 drill points. The use of mini drill point screws provides for reasonable ease of installation, while maintaining significantly higher pull-out resistances than no.3 drill points in light gauge steel framing.

The design of screw fastened connections is a task normally completed or reviewed by a structural engineer. The online Cascadia Clip® Calculator is a fully engineered design tool, complete with stamped engineering reports, to illustrate acceptable design application of the Cascadia Clips® under numerous building and environmental conditions. This calculator can be used for engineered submittal documents of the wall assembly, as long as the wall configurations are upheld.

The Cascadia Clip® is a suitable substrate for a number of cladding systems, including stucco. Stucco is inherently prone to cracking, and Cascadia assumes no responsibility whatsoever for any cracking of a stucco application.

HOW TO SPECIFY

Cascadia Clips® – Fiberglass Thermal Spacers
2", 3.5", 4", 5", or 6" depth

Steel Z-girts
18 gauge; sizing and coating by engineer/specifier. Most common configuration: 18 gauge with Galvalume AZM 150 coating (or AZ-50 – USA) 1.5" x 1" x 1.25" size.

Screws
Steel studs: ¼x14 x 4" Master Driller no.2 point DT2000 by Leland Industries (or 5", 6", 7", 8")

Wood studs: ¼x10 x 4" Master Gripper DT2000 by Leland Industries (or 5", 6", 7", 8")

Concrete/CMU: #14x15 x 3.5" Concrete Screw DT2000 by Leland Industries (or 5", 5.5", 6.5", 7.5")

All fasteners listed above are available through Cascadia Windows Ltd.

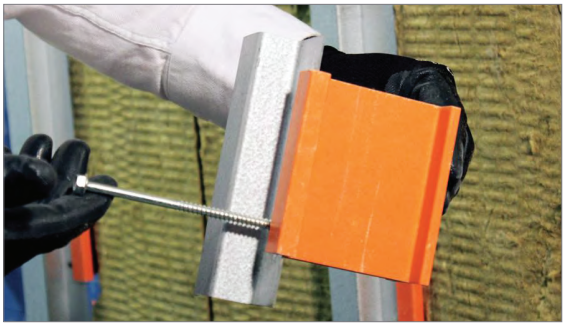

Insulation
CavityRock® DD by Roxul, RainBarrier45® by Thermafibre, or approved alternative [specifier to input total insulation thickness; match the depth of the Cascadia Clip]

Spray Foam Insulation
Various types may be used

DECLARE LABEL

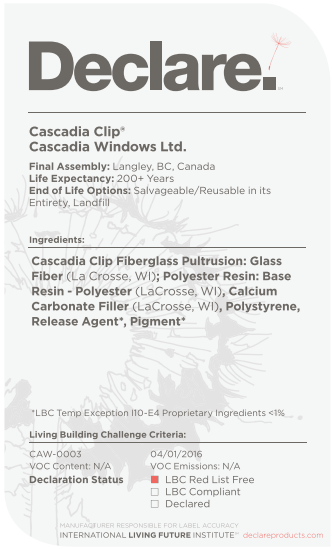
Declare.

Cascadia Clip*
Cascadia Windows Ltd.

Final Assembly: Langley, BC, Canada
Life Expectancy: 200+ Years
End of Life Options: Salvageable/Reusable in its Entirety, Landfill

Ingredients:

Cascadia Clip Fiberglass Pultrusion: Glass Fiber (La Crosse, WI)**; Polyester Resin: Base Resin - Polyester** (LaCrosse, WI)**, Calcium Carbonate Filler** (LaCrosse, WI)**, Polystyrene, Release Agent*, Pigment***

*LBC Temp Exception II10-E4 Proprietary Ingredients <1%

Living Building Challenge Criteria:

CAW-0003 | 04/01/2016
VOC Content: N/A | VOC Emissions: N/A
Declaration Status
■ LBC Red List Free
□ LBC Compliant
□ Declared

MANUFACTURER RESPONSIBLE FOR LABEL ACCURACY
INTERNATIONAL **LIVING FUTURE** INSTITUTE℠ declareproducts.com

VRCA AWARD

Cascadia Clips® received an award from the Vancouver Regional Construction Association (VRCA) in 2011 in the category of ***Sustainability and Innovation***.

VRCA

ACCLAIMED BY

BC EXPORT AWARDS 2012
BC's Leading Innovators BCBUSINESS
NRC NEW TECHNOLOGY AWARD FINALIST
THE WTN TIME CNN WORLD TECHNOLOGY AWARD FINALIST
GLOBE AWARDS INNOVATION AWARD WINNER

LIVING BUILDING CHALLENGE CERTIFIED

Red List Free

DESIGN

OUTSIDE 90º CORNER

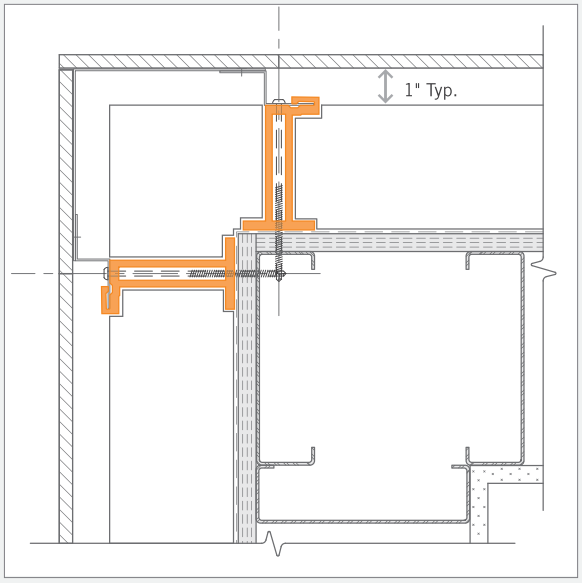

VERTICAL WALL SECTION

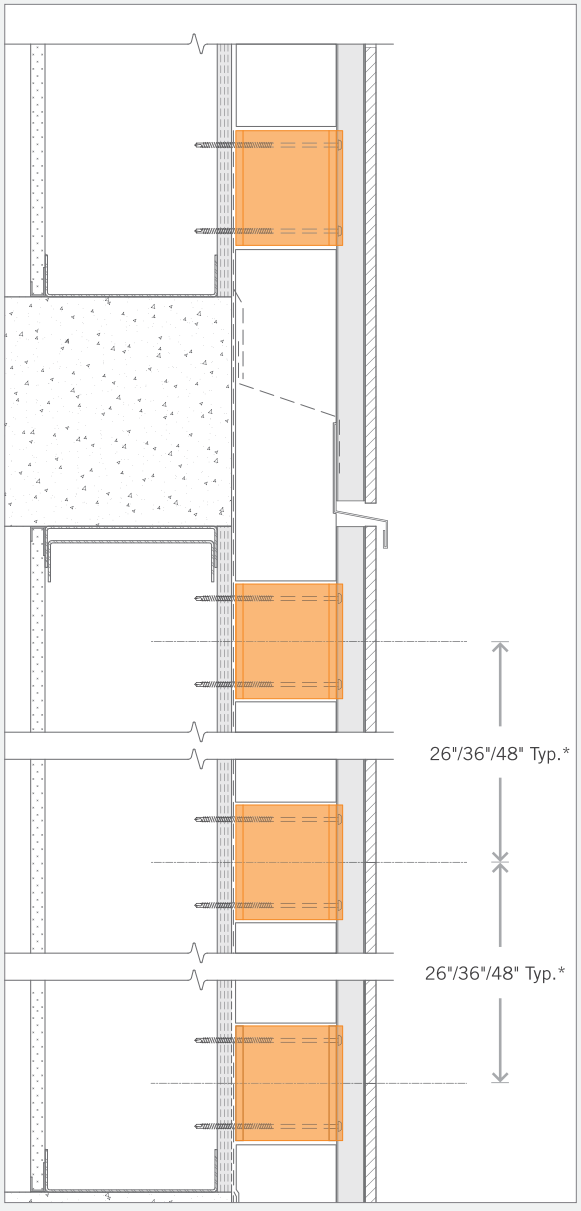

HORIZONTAL WALL SECTION

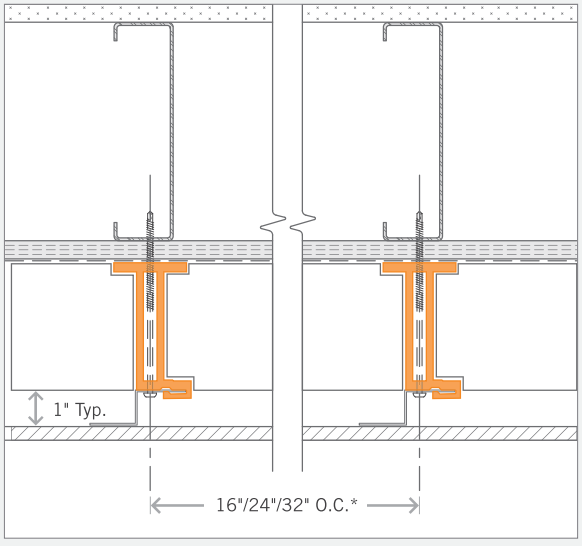

The Cascadia Clip® is a registered industrial design and patented product. Additional patents pending.
For more technical drawings and information, visit **www.cascadiaclip.com**

**Depending on spacing*

FOR FURTHER INFORMATION
ON THE CASCADIA CLIP®

CALL **604 857 4600**
EMAIL **INFO@CASCADIACLIP.COM**

CONTACT A TECHNICAL SALES REP IN
YOUR AREA BY VISITING CASCADIACLIP.COM
SEE THE 'CONTACT US' PAGE.

CASCADIA WINDOWS LTD.
LANGLEY, BRITISH COLUMBIA
604 857 4600

CASCADIACLIP.COM

CASCADIA
WINDOWS & DOORS

SUBMITTALS IDENTIFICATION SHEET

PROJECT: Wastewater Treatment Plant Upgrade
Iqaluit, Nunavut

CONTRACTOR: Kudlik Construction Ltd, Project 2018-062

Telephone: 867-979-1166

E-mail: srousseau@kudlik.biz

SUBCONTRACTOR:

Person responsible:

Telephone: () E-mail:

PRODUCT SUBMITTED:

☑ As Specified

☐ Alternate

SUPPLIER or MANUFACTURER: Moulure 2000

Person responsible: Benoit Prevost

Telephone: 418-496-6656 E-mail:

DESCRIPTION OF SUBMITTAL: Metal flashing

# of pages:

Reference to drawings:

Reference to specs:

Division: 07 Section: 07 46 13 – 07 46 19

REMARKS:

REVIEW AND COMMENTS (for use by Consultants):

STANTEC PROJECT #: 110126045 SUBMITTAL # SU-017rev1

This review by Stantec is for general conformance with the design concept of Stantec's design of the:

☑ Architectural ☐ Electrical
☐ Structural ☐ Other
☐ Mechanical

component(s) only and does not mean that Stantec has verified or approves the shop drawing(s). The Contractor remains solely responsible for the shop drawing(s) and this review by Stantec does not relieve the Contractor of the Contractor's responsibility for errors or omissions in the shop drawing(s) or for meeting all requirements of the contract documents. This review does not mean that Stantec approves the detailed design inherent in the shop drawing, responsibility for which shall remain with the Contractor submitting same, nor does this review mean that Stantec accepts any deviation of the shop drawing(s) from the contract documents. The Contractor is responsible for confirming all dimensions and correlating them at the job site, for all construction means, methods and techniques, and for coordination of construction work of all trades, including coordination of all shop drawings.

Stantec

☐ REVIEWED

☑ REVIEWED, AS NOTED

☐ REVISE AND RESUBMIT

☐ NOT REVIEWED

DATE 2018-06-22

BY Jason King

Review of this submission is for compliance with general intent of the contract. This review does not relieve the Sub-Contractor, Supplier or Manufacturer of responsibility for error or omissions in the submission or the responsibility of meeting all requirements of the contract documents. Any deviation from the contract documents initiated by the Sub-Contractor, Supplier or Manufacturer shall be at their sole risk. QUANTITIES AND DETAIL DIMENSIONS ARE THE SUB-CONTRACTORS OR SUPPLIERS RESPONSIBILITY. VERIFY DATA WITH FIELD DIMENSIONS.

SUBMITTAL TRACKING No.: **SU-017 rev 1** 2018-06-21

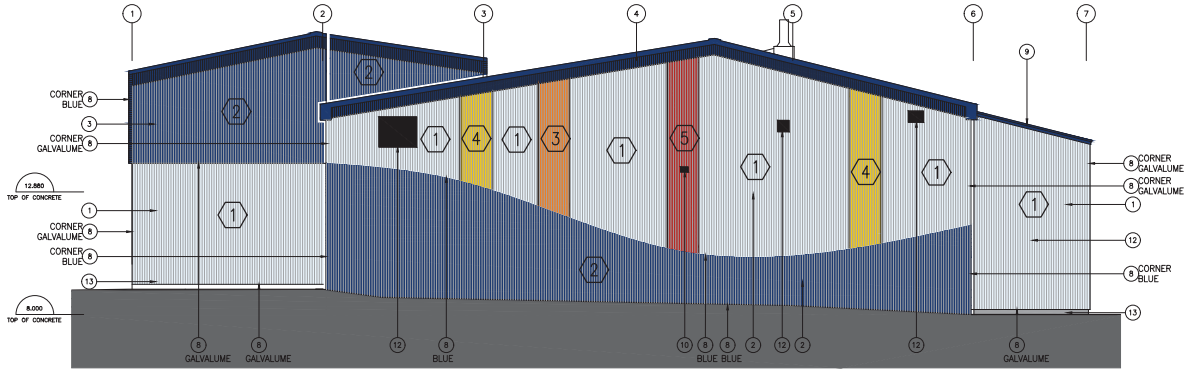

1 A401 EXTERIOR ELEVATION – WEST
1:100

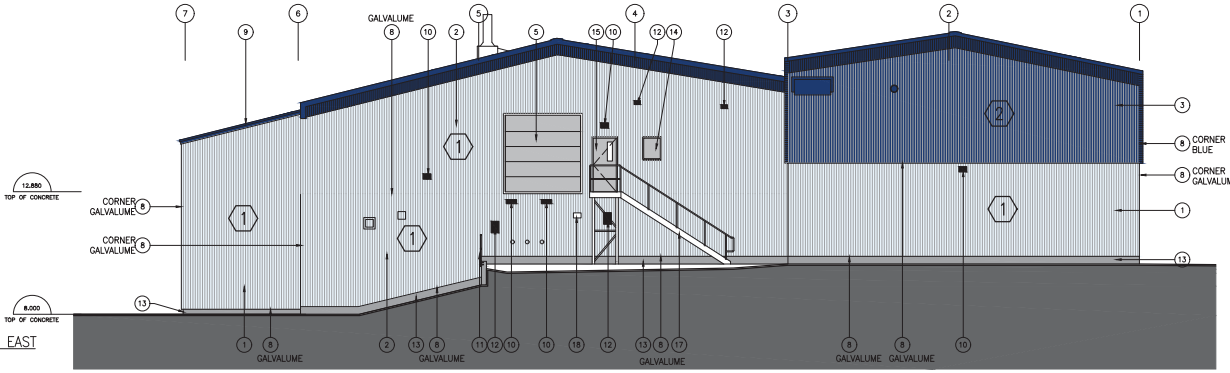

2 A401 EXTERIOR ELEVATION – EAST
1:100

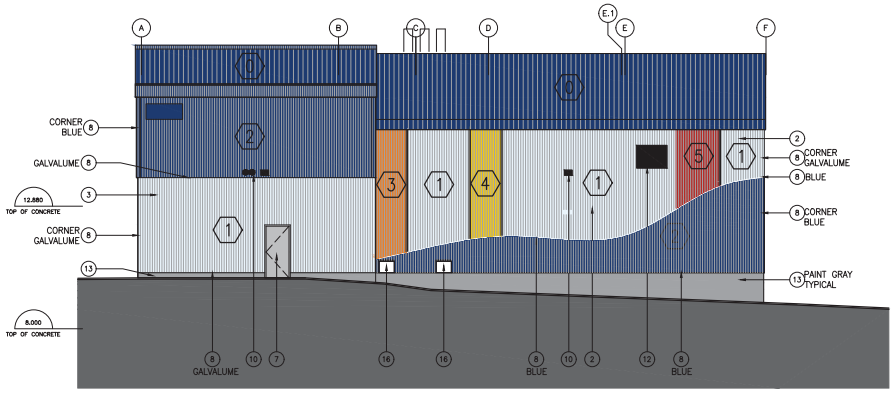

3 A401 EXTERIOR ELEVATION – NORTH
1:100

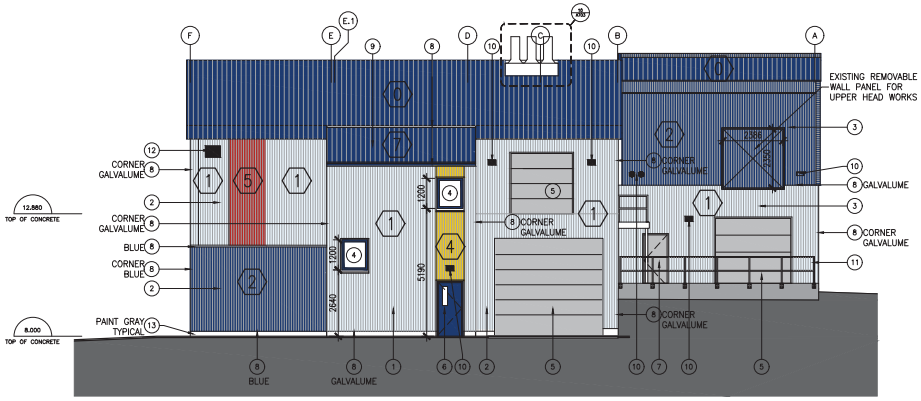

4 A401 EXTERIOR ELEVATION – SOUTH
1:100

LEGEND

NO.	ITEM
1	NEW CORRUGATED METAL CLADDING
2	EXISTING CLADDING TO BE REPLACED WITH NEW CORRUGATED METAL CLADDING
3	REPLACE EXISTING CEMENT BOARD WITH NEW METAL CLADDING
4	NEW FIBERGLASS WINDOW
5	EXISTING O/H DOOR TO BE REPLACED
6	NEW EXTERIOR MAN DOOR
7	EXISTING EXTERIOR MAN DOOR TO BE PAINTED
8	PRE-FINISHED METAL TRIM / FASCIA
9	NEW METAL ROOFING
10	NEW EXTERIOR FIXTURES/EMERGENCY BEACONS, REFER TO ELECTRICAL
11	NEW GALVANIZED STEEL GUARDRAIL
12	NEW LOUVERS / VENTS / STACKS. REFER TO MECHANICAL CONTRACT DOCUMENTS
13	16mm PRESSURE TREATED PLYWOOD PROTECTION BOARD
14	EXISTING WINDOW
15	EXISTING MAN DOOR TO BE REPLACED
16	INSULATED HOOD FOR CLEANOUT
17	EXISTING STAIR
18	REMOVE ITEM – PATCH & REPAIR OPENING

0 Existing – no change
1 Galvalume Plus – "Vicwest" – 22mm CORRUGATED
2 56081 Royal Blue – "Vicwest" – 22mm CORRUGATED
3 56063 International Orange – "Vicwest" – 22mm CORRUGATED
4 56070 Gold – "Vicwest" – 22mm CORRUGATED
5 56080 Bright Red – "Vicwest" – 22mm CORRUGATED
6 56081 Royal Blue – "Vicwest" – CL3070
7 56081 Royal Blue – "Vicwest" – TRADITION 100

NOTES:

- REVIEW AND COORDINATE LOCATIONS OF ABANDONED OR REMOVED EXTERIOR PENETRATIONS THROUGH THE EXISTING EXTERIOR WALLS AT AREAS TO BE RE-CLAD. PENETRATIONS TO PATCHED, SEALED AND MADE GOOD PRIOR TO CLADDING INSTALLATION.

Revision	By	Appd.	YY.MM.DD
ISSUED FOR CONSTRUCTION	TF	GP	18.05.23
0 ISSUED FOR BID	TF	GP	18.04.09
Issued	By	Appd.	YY.MM.DD

Consultants

Permit-Seal

Stantec Architecture Ltd. PERMIT No. 006 Issued pursuant to Section 28 of the The Architects Act of the Northwest Territories #110126045 IWWTP - IFC

May 23, 2018 #110126045 IWWTP - IFC

NUNAMI STANTEC LIMITED

1088C Noble House
Iqaluit NU
www.stantec.com

The Contractor shall verify and be responsible for all dimensions. DO NOT scale the drawing - any errors or omissions shall be reported to Stantec without delay.
The Copyrights to all designs and drawings are the property of Stantec. Reproduction or use for any purpose other than that authorized by Stantec is forbidden.

Client/Project
Iqaluit
IQALUIT WASTEWATER TREATMENT PLANT UPGRADE
City of Iqaluit, Nunavut

File Name: A401-ELEVATIONS | Dwn. TF | Chkd. JB | Dsgn. JB | YY.MM.DD 18.04.09

Title
ARCHITECTURAL EXTERIOR ELEVATIONS RESPONSE TO RFI-08-V1

Project No. 110126045 | Scale 1:75
Drawing No. A401 | Sheet 8 of 12 | Revision 0

V:\1449\active\110126045\000_Edm_folders\drafting\drawings\03-architectural\current\A401-elevations.dwg
2018/06/08 4:18 PM By: Flender, Thor
ORIGINAL SHEET - ISO A1

Moulures 2000 Inc.

Fabricant et distributeur de produits d'acier et aluminium
Tôle profilée, moulures et accessoires décoratifs

103, rue du Parc, St-Patrice-de-Beaurivage (Québec) G0S 1B0

Phone: 418 496-6656 Fax: 418 496-6657
E-Mail: bernardprevost@moulures2000.com

QUOTE ☒ VALID FOR 30 DAYS
ORDER ☐ NUMBER: _____
Date : _____

Delivery date : _____
Page : 1 of 3

Customer : Kudlik Const
CONTACT : Sandra Rousseau
PROJECT : Iqaluit Wastewater Treatment Upgrade
SHIPPING ADRESS: _____

PHONE : _____
FAX : _____
E-Mail : _____

Quantity :
Color :
Steel ☒ 24 Ga Aluminium ☐
Item # : 1

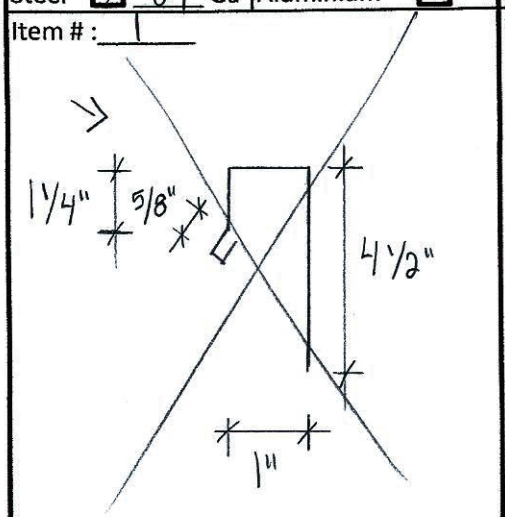

4/703

Quantity :
Color :
Steel ☒ 24 Ga Aluminium ☐
Item # : 2

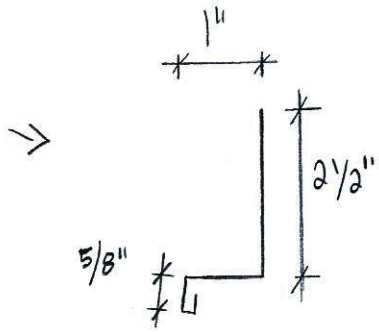

5/703

Quantity :
Color :
Steel ☒ 24 Ga Aluminium ☐
Item # : 3

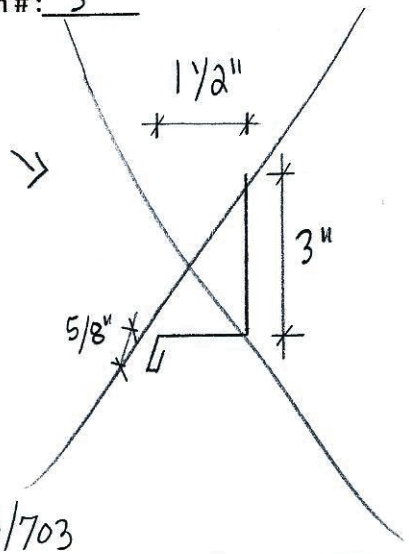

6/703

Quantity :
Color :
Steel ☒ 24 Ga Aluminium ☐
Item # : 4

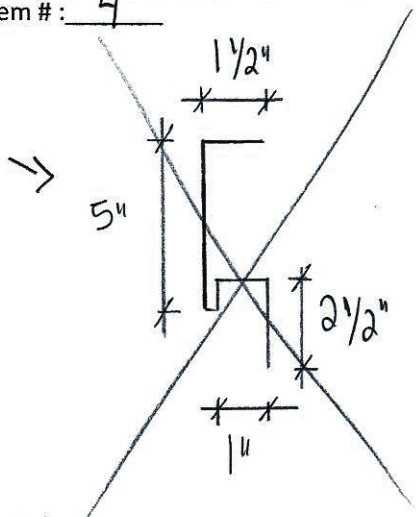

6/703

Quantity :
Color :
Steel ☒ 24 Ga Aluminium ☐
Item # : 5

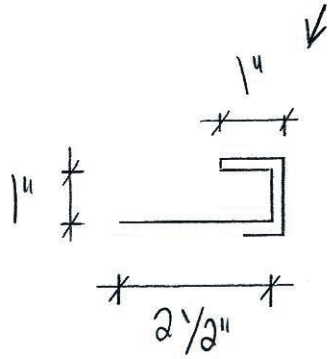

7/703

Quantity :
Color :
Steel ☒ 24 Ga Aluminium ☐
Item # : 6

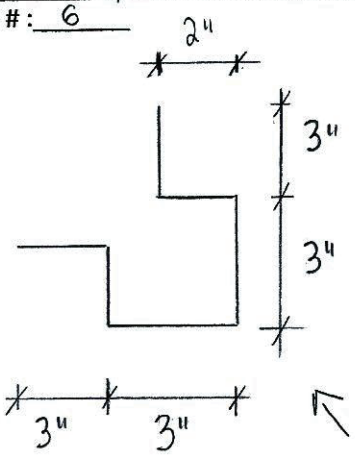

Corner 1/702

Customer Approval ☐ _____ Date: _____

Moulures 2000 Inc.

Fabricant et distributeur de produits d'acier et aluminium
Tôle profilée, moulures et accessoires décoratifs

103, rue du Parc, St-Patrice-de-Beaurivage (Québec) G0S 1B0
Phone: 418 496-6656 Fax: 418 496-6657
E-Mail: bernardprevost@moulures2000.com

QUOTE ☒ VALID FOR 30 DAYS
ORDER ☐ NUMBER: _____
Date : _____

Delivery date : _____
Page : 2 of _____

Customer : Kudlik Const.
CONTACT : Sandra Rousseau
PROJECT : Iqaluit Wastwater treatment Upgrade
SHIPPING ADRESS: _____

PHONE : _____
FAX : _____
E-Mail : _____

Quantity :
Color :
Steel ☒ 24 Ga Aluminium ☐
Item # : 7

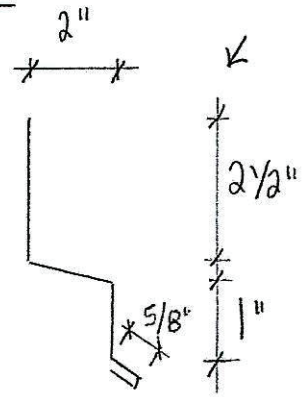

Transition

Quantity :
Color :
Steel ☒ 24 Ga Aluminium ☐
Item # : 8

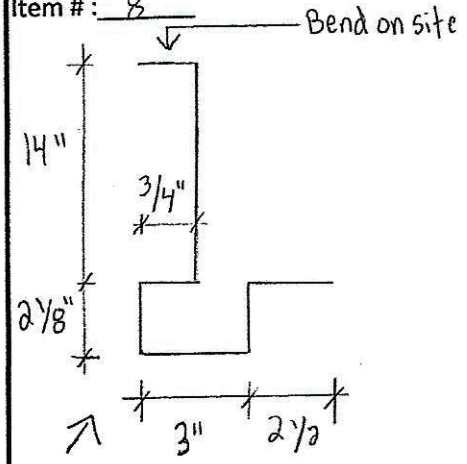

7/701 Window jamb
1/702 Door Jamb

Quantity :
Color :
Steel ☐ 24 Ga Aluminium ☐
Item # : 9

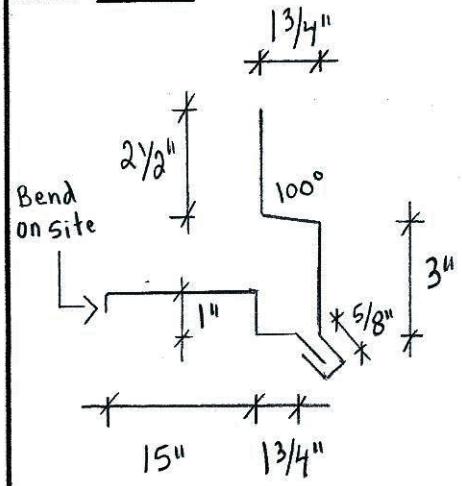

Quantity :
Color :
Steel ☒ 24 Ga Aluminium ☐
Item # : 10

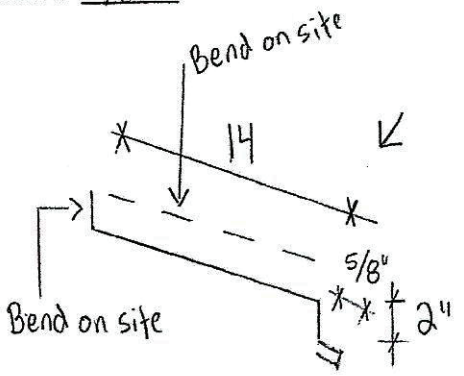

6/701 Window Sill

Quantity :
Color : Galvanised
Steel ☒ 24 Ga Aluminium ☐
Item # : 11

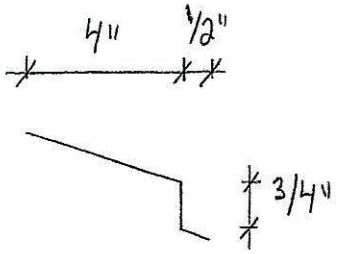

6/701

Quantity :
Color :
Steel ☒ 24 Ga Aluminium ☐
Item # : 12

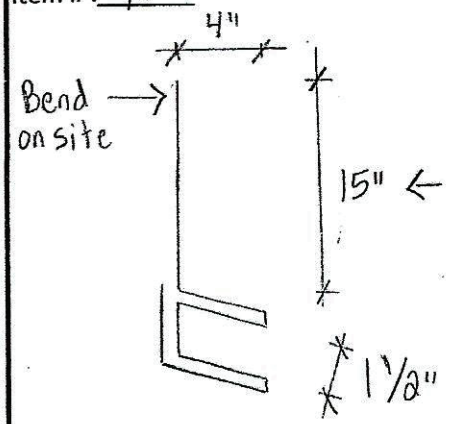

1/701 Roof top

Customer Approval ☐ _____ Date: _____

Moulures 2000 Inc.

Fabricant et distributeur de produits d'acier et aluminium
Tôle profilée, moulures et accessoires décoratifs

103, rue du Parc, St-Patrice-de-Beaurivage (Québec) G0S 1B0

Phone: 418 496-6656 Fax: 418 496-6657
E-Mail: bernardprevost@moulures2000.com

QUOTE ☐ VALID FOR 30 DAYS
ORDER ☐ NUMBER: _____
Date : _____

Delivery date : _____
Page : 3 of _____

Customer : Kudlik Const.
CONTACT : Sandra Rousseau
PROJECT : Iqaluit Wastewater Treatment Upgrade
SHIPPING ADRESS: _____

PHONE : _____
FAX : _____
E-Mail : _____

Quantity :
Color :
Steel ☒ 24 Ga Aluminium ☐
Item # : 13

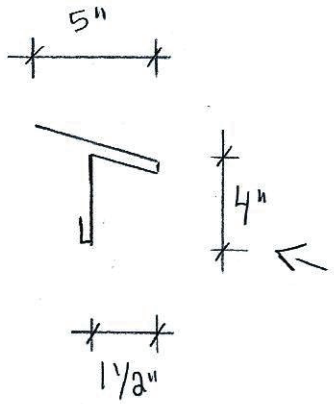

2/701

Quantity :
Color :
Steel ☒ 24 Ga Aluminium ☐
Item # : 14

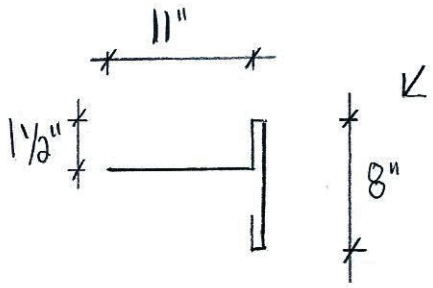

3/701

Quantity :
Color :
Steel ☒ 24 Ga Aluminium ☐
Item # : 15

to small detail shows extending through insulation

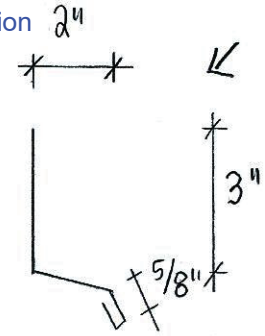

5/701 Starter

Quantity :
Color :
Steel ☒ 24 Ga Aluminium ☐
Item # : 16

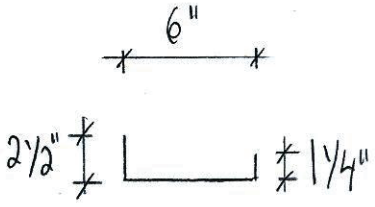

7/702

Quantity :
Color :
Steel ☒ 24 Ga Aluminium ☐
Item # : 17

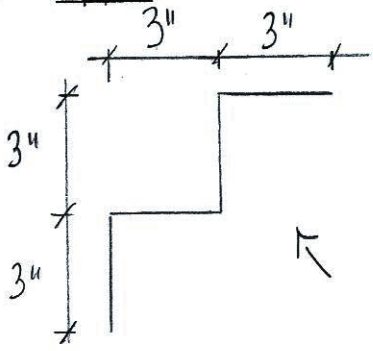

Interior corner

Quantity :
Color :
Steel ☐ ____ Ga Aluminium ☐
Item # : _____

Customer Approval ☐ _____ Date: _____

SUBMITTALS IDENTIFICATION SHEET

PROJECT: Wastewater Treatment Plant Upgrade
Iqaluit, Nunavut

NUNAMI
STANTEC LIMITED
1088C Noble House
Iqaluit NU
www.stantec.com

CONTRACTOR: Kudlik Construction Ltd, Project 2018-062

Telephone: 867-979-1166

E-mail: srousseau@kudlik.biz

SUBCONTRACTOR:

Person responsible:

Telephone: () E-mail:

PRODUCT SUBMITTED:

☑ As Specified

☐ Alternate

SUPPLIER or MANUFACTURER: Materiaux Audet

Person responsible:

Telephone: E-mail: remi.tessier@materiauxaudet.ca

DESCRIPTION OF SUBMITTAL: insulation

# of pages:

Reference to drawings:

Reference to specs:

Division: 07 Section: 07 21 13

REMARKS:

REVIEW AND COMMENTS (for use by Consultants):

STANTEC PROJECT #: 110126045 SUBMITTAL # SU-018rev1

This review by Stantec is for general conformance with the design concept of Stantec's design of the:

☑ Architectural ☐ Electrical
☐ Structural ☐ Other
☐ Mechanical

component(s) only and does not mean that Stantec has verified or approves the shop drawing(s). The Contractor remains solely responsible for the shop drawing(s) and this review by Stantec does not relieve the Contractor of the Contractor's responsibility for errors or omissions in the shop drawing(s) or for meeting all requirements of the contract documents. This review does not mean that Stantec approves the detailed design inherent in the shop drawing, responsibility for which shall remain with the Contractor submitting same, nor does this review mean that Stantec accepts any deviation of the shop drawing(s) from the contract documents. The Contractor is responsible for confirming all dimensions and correlating them at the job site, for all construction means, methods and techniques, and for coordination of construction work of all trades, including coordination of all shop drawings.

Stantec

☑ REVIEWED

☐ REVIEWED, AS NOTED

☐ REVISE AND RESUBMIT

☐ NOT REVIEWED

DATE 2018-06-20

BY Jason King

Review of this submission is for compliance with general intent of the contract. This review does not relieve the Sub-Contractor, Supplier or Manufacturer of responsibility for error or omissions in the submission or the responsibility of meeting all requirements of the contract documents. Any deviation from the contract documents initiated by the Sub-Contractor, Supplier or Manufacturer shall be at their sole risk. QUANTITIES AND DETAIL DIMENSIONS ARE THE SUB-CONTRACTORS OR SUPPLIERS RESPONSIBILITY. VERIFY DATA WITH FIELD DIMENSIONS.

SUBMITTAL TRACKING No.: **SU-018 rev 1**

2018-06-20

STYROFOAM™ HIGHLOAD 40, 60 AND 100 Extruded Polystyrene Insulation

1. PRODUCT NAME

STYROFOAM™ HIGHLOAD Extruded Polystyrene Foam Insulation

2. MANUFACTURER

The Dow Chemical Company
Dow Building Solutions
200 Larkin
Midland, MI 48674
1-866-583-BLUE (2583)
Fax 1-989-832-1465

Dow Chemical Canada ULC
Dow Building Solutions
450 – 1st St. SW, Suite 2100
Calgary, AB T2P 5H1
1-866-583-BLUE (2583) (English)
1-800-363-6210 (French)

www.dowbuildingsolutions.com

3. PRODUCT DESCRIPTION

STYROFOAM™ HIGHLOAD Extruded Polystyrene Foam Insulation is a closed-cell foam insulation. Available in compressive strengths of 40, 60 and 100 psi (275, 415 and 690 kPa), STYROFOAM™ HIGHLOAD insulation features exceptional moisture resistance and R-value* retention. All three STYROFOAM™ HIGHLOAD insulation products resist compressive creep and fatigue, delivering long-term compressive strength. Like all STYROFOAM™ insulation products, STYROFOAM™ HIGHLOAD 40, 60 and 100 are durable, versatile and reusable – making them a preferred choice for a variety of high-load applications.

BASIC USE

STYROFOAM™ HIGHLOAD insulation is designed for use in low-temperature (freezer floor) applications, highways, airport runways, bridge abutments, parking decks, utility lines, ice rinks and plaza decks. It is the responsibility of the designer to select the proper STYROFOAM™ HIGHLOAD insulation product based on the dead and live loads expected in the application.

4. TECHNICAL DATA

APPLICABLE STANDARDS

STYROFOAM™ HIGHLOAD 40, 60 and 100 insulation meets ASTM C578 – Standard Specification for Rigid Cellular Polystyrene Thermal Insulation. Applicable ASTM standards include:

- C518 – Standard Test Method for Steady-State Thermal Transmission Properties by Means of the Heat Flow Meter Apparatus
- C177 – Standard Test Method for Steady-State Heat Flux Measurements and Thermal Transmission Properties by Means of the Guarded-Hot-Plate Apparatus
- D1621 – Standard Test Method for Compressive Properties of Rigid Cellular Plastics
- D2842 – Standard Test Method for Water Absorption of Rigid Cellular Plastics
- E96 – Standard Test Methods for Water Vapor Transmission of Materials
- C272 - Standard Test Method for Water Absorption of Core Materials for Structural Sandwich Constructions
- D696 – Standard Test Method for Coefficient of Linear Thermal Expansion of Plastics Between -30°C and 30°C With a Vitreous Silica Dilatometer
- C203 – Standard Test Methods for Breaking Load and Flexural Properties of Block-Type Thermal Insulation Cellular Plastics
- D4716 – Standard Test Method for Determining the (In-plane) Flow Rate per Unit Width and Hydraulic Transmissivity of a Geosynthetic Using a Constant Head
- CAN/ULC S701 Type 4

TABLE 1: U.S. VALUES AND TYPICAL PHYSICAL PROPERTIES OF STYROFOAM™ HIGHLOAD 40, 60 AND 100 INSULATION

PROPERTY AND TEST METHOD	HIGHLOAD 40	HIGHLOAD 60	HIGHLOAD 100
Thermal Resistance, per inch, ASTM C518, C177, @ 75°F mean temp., ft²•h•°F/Btu, R-value, min.	5.0	5.0	5.0
Compressive Strength(1), ASTM D1621, psi, min.	40	60	100
Water Absorption, ASTM C272, % by volume, max. (24hr water immersion)	0.3	0.3	0.3
Water Vapor Permeance(2), ASTM E96, perms	1.0 (57.2 ng/Pa.s.m²)	0.8 (45.8 ng/Pa.s.m²)	0.6 (34.3 ng/Pa.s.m²)
Maximum Use Temperature, °F	165	165	165
Coefficient of Linear Thermal Expansion, ASTM D696, in/in•°F	3.5×10^{-5}	3.5×10^{-5}	3.5×10^{-5}
Flexural Strength, ASTM C203, psi, min.	60	75	100
Complies with ASTM C578, Type	VI	VII	V

(1) Vertical compressive strength is measured at 5 percent deformation or at yield, whichever occurs first. Since STYROFOAM insulations are visco-elastic materials, adequate design safety factors should be used to prevent long-term creep. For static loads, 3:1 is suggested. For dynamic loads, call 1-866-583-BLUE (2583) for safety factor recommendation.
(2) Water vapor permeance varies with product type and thickness. Values are based on the desiccant method and they apply to insulation 1" or greater in thickness.

®™Trademark of The Dow Chemical Company ("Dow") or an affiliated company of Dow
* R means resistance to heat flow. The higher the R-value or RSI, the greater the insulating power.

TABLE 2: CANADA VALUES AND TYPICAL PHYSICAL PROPERTIES OF STYROFOAM™ HIGHLOAD 40, 60 AND 100 INSULATION

PROPERTY AND TEST METHOD	HIGHLOAD 40	HIGHLOAD 60	HIGHLOAD 100
Thermal Resistance, per inch (25 mm), ASTM C518, C177, @ 75°F (24°C) mean temp., ft²•h•°F/Btu (m²•°C/W), R-value (RSI), min.	5.0 (.88)	5.0 (.88)	5.0 (.88)
Compressive Strength(1), ASTM D1621, psi (kPa), min.	40 (275)	60 (415)	100 (690)
Water Absorption, ASTM D2842, % by volume, max. (96hr water immersion)	0.7	0.7	0.7
Water Vapour Permeance(2), ASTM E96, perms (ng/Pa•s•m²)	1.0 (57.2 ng/ Pa.s.m²)	0.8 (45.8 ng/ Pa.s.m²)	0.6 (34.3 ng/ Pa.s.m²)
Maximum Use Temperature, °F (°C)	165 (74)	165 (74)	165 (74)
Coefficient of Linear Thermal Expansion, ASTM D696, in/in•°F (mm/m•°C)	3.5 x 10^{-5} (6.3 x 10^{-2})	3.5 x 10^{-5} (6.3 x 10^{-2})	3.5 x 10^{-5} (6.3 x 10^{-2})
Flexural Strength, ASTM C203, psi (kPa), min.	70 (480)	85 (585)	85 (585)
Compressive Modulus (typical), ASTM D1621, psi (kPa)	1,400 (9,650)	2,200 (15,170)	3,700 (25,510)
Complies with CAN/ULC S701, Type	4	4	4

(1) Vertical compressive strength is measured at 5 percent deformation or at yield, whichever occurs first. Since STYROFOAM insulations are visco-elastic materials, adequate design safety factors should be used to prevent long-term creep. For static loads, 3:1 is suggested. For dynamic loads, call 1-866-583-BLUE (2583) for safety factor recommendation.
(2) Water vapour permeance varies with product type and thickness. Values are based on the desiccant method and they apply to insulation 1" (25 mm) or greater in thickness.

CODE COMPLIANCES

STYROFOAM™ HIGHLOAD 40, 60 and 100 insulation complies with the following codes:

- International Residential Code (IRC) and International Building Code (IBC); see ICC-ES ESR 2142 (excluding STYROFOAM™ HIGHLOAD 100)
- California Std. Reg. #CA T-064
- Underwriters Laboratories, see Classification Certificate D369
- Underwriters Laboratories Verified to ESR 2142

Contact your Dow sales representative or local authorities for state/provincial and local building code requirements and related acceptances.

TYPICAL PHYSICAL PROPERTIES

STYROFOAM™ HIGHLOAD 40, 60 and 100 insulation products exhibit the typical physical properties indicated in Tables 1 and 2 when tested as represented.

ENVIRONMENTAL DATA

STYROFOAM™ HIGHLOAD 40, 60 and 100 insulation is manufactured with proprietary blowing agent potential with zero percent ozone depletion potential.

STYROFOAM™ Extruded Polystyrene Foam Insulation products are reusable in many applications.

®™Trademark of The Dow Chemical Company ("Dow") or an affiliated company of Dow

FIRE PROTECTION
STYROFOAM™ HIGHLOAD 40, 60 and 100 insulation is combustible; protect from high heat sources. Local building codes may require a protective or thermal barrier. For more information, consult MSDS, call Dow at 1-866-583-BLUE (2583) or contact your local building inspector.

5. INSTALLATION

STYROFOAM™ HIGHLOAD 40, 60 and 100 insulation boards are easy to handle and install. They can be cut with a utility knife or any sharp blade. Contact a local Dow representative or access the literature library at www.dowbuildingsolutions.com for more specific instructions.

6. AVAILABILITY

STYROFOAM™ HIGHLOAD 40, 60 and 100 insulation products are distributed through an extensive network. For more information, call:
1-800-232-2436 (English)
1-800-565-1255 (French)

7. WARRANTY

In the United States, a 15-year limited thermal warranty is available. Warranties are available as described at http://building.dow.com/na/en/tools/warranty.htm

8. MAINTENANCE

Not applicable.

9. TECHNICAL SERVICES

Dow can provide technical information to help address questions when using STYROFOAM™ HIGHLOAD 40, 60 and 100 insulation products. Technical personnel are available to assist with any insulation project. For technical assistance call:
1-866-583-BLUE (2583) (English)
1-800-363-6210 (French)

10. FILING SYSTEMS

- www.dowbuildingsolutions.com
- www.sweets.com

®™Trademark of The Dow Chemical Company ("Dow") or an affiliated company of Dow

www.dowbuildingsolutions.com

Technical Information
1-866-583-BLUE (2583) (English)
1-800-363-6210 (French)

Sales Information
1-800-232-2436 (English)
1-800-565-1255 (French)

IN THE U.S.
THE DOW CHEMICAL COMPANY
200 Larkin
Midland, MI 48674

IN CANADA
DOW CHEMICAL CANADA ULC
450 – 1st St. SW . Suite 2100
Calgary, AB T2P 5H1

NOTICE: No freedom from any patent owned by Dow or others is to be inferred. Because use conditions and applicable laws may differ from one location to another and may change with time, Customer is responsible for determining whether products and the information in this document are appropriate for Customer's use and for ensuring that Customer's workplace and disposal practices are in compliance with applicable laws and other government enactments. The product shown in this literature may not be available for sale and/or available in all geographies where Dow is represented. The claims made may not have been approved for use in all countries or regions. Dow assumes no obligation or liability for the information in this document. References to "Dow" or the "Company" mean the Dow legal entity selling the products to Customer unless otherwise expressly noted. NO EXPRESS WARRANTIES ARE GIVEN EXCEPT FOR ANY APPLICABLE WRITTEN WARRANTIES SPECIFICALLY PROVIDED BY DOW. ALL IMPLIED WARRANTIES INCLUDING THOSE OF MERCHANTABILITY AND FITNESS FOR A PARTICULAR PURPOSE ARE EXPRESSLY EXCLUDED.

COMBUSTIBLE: Protect from high heat sources. Local building codes may require a protective or thermal barrier. For more information, consult MSDS, call Dow at 1-866-583-BLUE (2583) or contact your local building inspector. In an emergency, call 1-989-636-4400 in the U.S. or 1-519-339-3711 in Canada.

Building and/or construction practices unrelated to building materials could greatly affect moisture and the potential for mold formation. No material supplier including Dow can give assurance that mold will not develop in any specific system.

ENERGY STAR PARTNER

Printed in U.S.A.

®™Trademark of The Dow Chemical Company ("Dow") or an affiliated company of Dow

Form No. 179-02548X-1210MCK
178-00202X-1210MCK
MCKAY207222

SUBMITTALS IDENTIFICATION SHEET

PROJECT: Wastewater Treatment Plant Upgrade
Iqaluit, Nunavut

NUNAMI
STANTEC LIMITED
1088C Noble House
Iqaluit NU
www.stantec.com

CONTRACTOR: Kudlik Construction Ltd, Project 2018-062

Telephone: 867-979-1166

E-mail: srousseau@kudlik.biz

SUBCONTRACTOR:

Person responsible:

Telephone: () E-mail:

PRODUCT SUBMITTED:

☐ As Specified

☐ Alternate

SUPPLIER or MANUFACTURER: Cometal

Person responsible: Nicolas Girard

Telephone: E-mail: Nicolas.girard@cometal.ca

DESCRIPTION OF SUBMITTAL: toilette accessories

# of pages:

Reference to drawings:

Reference to specs:

Division: 10 Section: 10 28 13

REMARKS:

REVIEW AND COMMENTS (for use by Consultants):

STANTEC PROJECT #: 110126045 SUBMITTAL # SU-019

This review by Stantec is for general conformance with the design concept of Stantec's design of the:

☑ Architectural ☐ Electrical
☐ Structural ☐ Other
☐ Mechanical

component(s) only and does not mean that Stantec has verified or approves the shop drawing(s). The Contractor remains solely responsible for the shop drawing(s) and this review by Stantec does not relieve the Contractor of the Contractor's responsibility for errors or omissions in the shop drawing(s) or for meeting all requirements of the contract documents. This review does not mean that Stantec approves the detailed design inherent in the shop drawing, responsibility for which shall remain with the Contractor submitting same, nor does this review mean that Stantec accepts any deviation of the shop drawing(s) from the contract documents. The Contractor is responsible for confirming all dimensions and correlating them at the job site, for all construction means, methods and techniques, and for coordination of construction work of all trades, including coordination of all shop drawings.

Stantec

☑ REVIEWED

☐ REVIEWED, AS NOTED

☐ REVISE AND RESUBMIT

☐ NOT REVIEWED

DATE 2018-06-28

BY Jason King

Review of this submission is for compliance with general intent of the contract. This review does not relieve the Sub-Contractor, Supplier or Manufacturer of responsibility for error or omissions in the submission or the responsibility of meeting all requirements of the contract documents. Any deviation from the contract documents initiated by the Sub-Contractor, Supplier or Manufacturer shall be at their sole risk. QUANTITIES AND DETAIL DIMENSIONS ARE THE SUB-CONTRACTORS OR SUPPLIERS RESPONSIBILITY. VERIFY DATA WITH FIELD DIMENSIONS.

SUBMITTAL TRACKING No.: **SU-019**

2018-06-27

BOBRICK

Technical Data

DOUBLE-ROLL TOILET TISSUE DISPENSER WITH CONTROLLED DELIVERY

B-265

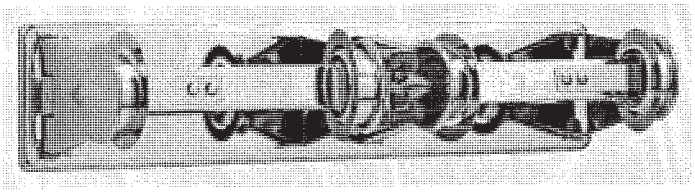

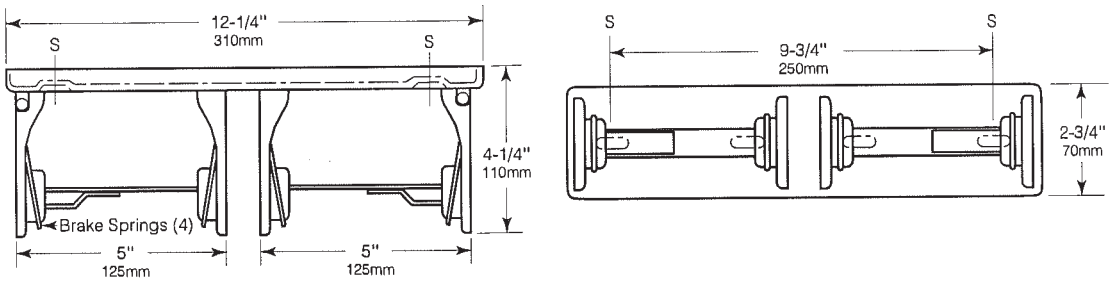

MATERIALS:

Heavy-gauge chrome-plated steel with bright polished finish. Mounting bracket is 18-gauge (1.2mm). Equipped with vandal-resistant self-locking mechanisms and four heavy-duty brake springs.

OPERATION:

Heavy-duty brake springs provide controlled delivery. Toilet tissue rolls will not spin freely. Eliminates waste. Accommodates two standard-core toilet tissue rolls up to 4-1/2" (115mm) diameter. Toilet tissue rolls cannot be removed from holder until empty.

Instructions for changing toilet tissue roll:

1. Remove brown core of depleted toilet tissue roll from dispenser.
2. Spread apart arms, releasing center support.
3. Place new toilet tissue roll on center support.
4. Spread apart arms and push toilet tissue roll with center support back into dispenser.
5. Dispenser is loaded.

INSTALLATION:

Mount unit on wall or toilet partition with four sheet-metal screws, furnished by manufacturer, at points indicated by an *S*.

For plaster or dry wall construction, provide concealed backing to comply with local building codes, then secure unit with sheet-metal screws furnished. For other wall surfaces, provide fiber plugs or expansion shields for use with sheet-metal screws, or provide 1/8" (3mm) toggle bolts or expansion bolts.

For partitions with particle-board or other solid core, secure with sheet-metal screws, or provide through-bolts, nuts, and washers. For hollow-core metal partitions, provide solid backing into which sheet-metal screws can be secured.

SPECIFICATION:

Double-roll toilet tissue dispenser shall be heavy-gauge chrome-plated steel with bright polished finish. Unit shall be equipped with vandal-resistant self-locking mechanisms, provide controlled delivery operation, and accommodate two standard-core toilet tissue rolls up to 4-1/2" (115mm) diameter.

Double-Roll Toilet Tissue Dispenser shall be Model B-265 of Bobrick Washroom Equipment, Inc., Clifton Park, New York; Jackson, Tennessee; Los Angeles, California; Bobrick Washroom Equipment Company, Scarborough, Ontario; Bobrick Washroom Equipment Pty. Ltd., Australia; Bobrick Washroom Equipment Limited, United Kingdom.

The illustrations and descriptions herein are applicable to production as of the date of this Technical Data Sheet.
The manufacturer reserves the right to, and does from time to time, make changes and improvements in designs and dimensions.

Revised 6/05/16 Printed in U.S.A.
© 2015 by Bobrick Washroom Equipment, Inc.

F-103

Frost

- Quality
- Value
- Service

Tech Reference

Hygienic Solutions at Work

Universal Towel Dispenser

Code 101:	White epoxy powder finish
Code 101-1:	White epoxy powder finish with lock
Code 102:	Polished chrome finish
Code 102-1:	Polished chrome finish with lock
Code 103:	Stainless steel type 304 No. 4 brushed finish
Code 103-1:	Stainless steel type 304 No. 4 brushed finish with lock

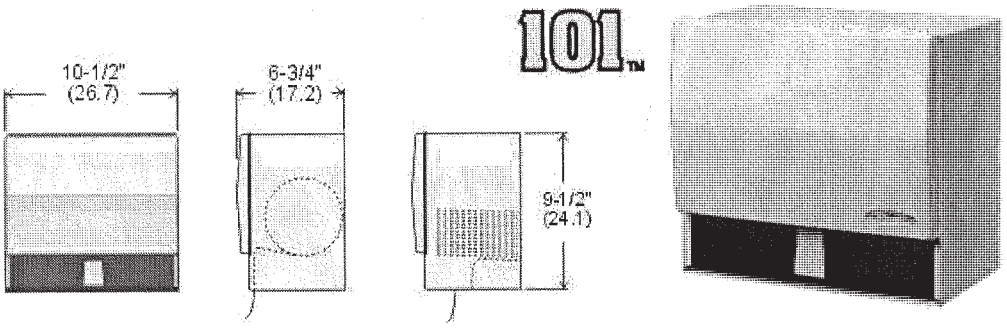

Code 101 | Code 101 Side View Roll dispensing | Single fold dispensing | Code 101 ¾ View

Specifications:

Site Location: The 101 series of dispensers are an industry standard and can be used in any room or site location.
Dispensing: Universal towel dispenser will accept all standard single fold and roll towels (max. 6" diameter and up to 10" long). Available with keyed tumbler lock to reduce pilferage and vandalism.
Features: Front loading for easy service and maintenance. All welded construction of 20 and 22 gauge steel. Full length piano hinge on door.
SS features: Drawn stainless steel door. All welded stainless steel (304, No. 4 brushed) construction. All doors are hinged with full length stainless steel piano hinges. Product shipped with protective plastic coating to be removed after installation.
Shipping Weight: 2.5 kg. (5-1/2 lbs.)
Installation: For unrestricted access, bottom of unit to floor must not exceed 44" (111.7).

Description and specifications applicable on date issued. Frost reserves the right to make improvements or changes without notice.

BOBRICK

Technical Data

ConturaSeries® SURFACE-MOUNTED SOAP DISPENSER

B-4112

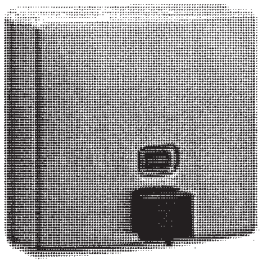

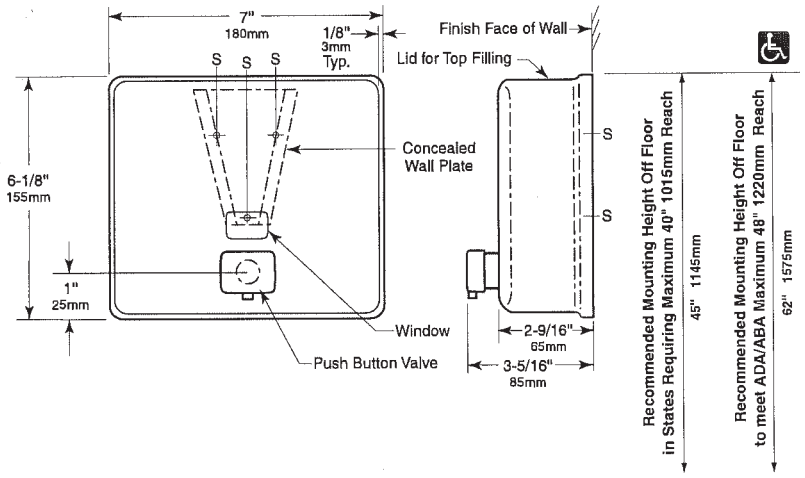

MATERIALS:

Container — Body is 18-8, Type-304, 20-gauge (1.0mm) stainless steel with satin-finish. Drawn, one-piece, seamless construction. Front has same degree of arc as other Bobrick ConturaSeries washroom accessories. Radius on corners and edges complement other ConturaSeries accessories. Back plate is 22-gauge (0.8mm) stainless steel with 20-gauge (1.0mm) stainless steel mounting bracket attached. Container body and back plate are epoxy-sealed to prevent warping and leakage. Concealed wall plate is 20-gauge (1.0mm) stainless steel. Equipped with a plastic soap refill-indicator window and a locked, hinged stainless steel lid for top filling. Capacity: 40-fl oz (1.2-L).

Valve — Black molded plastic push button. Soap head-holding mushroom valve. Stainless steel spring. U-packing seal and duckbill. Antibacterial-soap-resistant plastic cylinder.

OPERATION:

Corrosion-resistant valve dispenses commercially marketed all-purpose hand soaps. To prevent corrosion, use only chloride-free pH-netural liquid soaps, non-iodine based soaps and do not use alcohol based sanitisers. Valve operates with one hand, without tight grasping, pinching, or twisting of the wrist, and with less than 5 pounds of force (22.2 N) to comply with accessible design guidelines (including ADAAG in U.S.A.). Window indicates when refill is required. The locked, hinged lid opens for top filling with special key provided. Concealed, vandal-resistant mounting.

INSTALLATION:

Secure wall plate to the wall with screws furnished at points indicated by an *S*. Slide mounting bracket of container down onto wall plate and secure unit with furnished locking-screw. For plaster or dry wall construction, provide concealed backing to comply with local building codes, then secure unit with screws furnished. For other wall surfaces, provide fiber plugs or expansion shields for use with screws furnished, or provide 1/8" (3mm) toggle bolts or expansion bolts.

Note: Surface-mount the dispenser plumb and true with valve 6" (152mm) to right or left of lavatory center. Provide 4" (102mm) minimum clearance from the lid to the underside of any horizontal projection. Push buttons should be located 44" (1120mm) maximum above the finish floor. Where a high reach is over an obstruction (countertop), the high forward reach shall be 48" (1220mm) maximum where the reach depth is 20" (510mm) maximum. Where the reach depth exceeds 20" (510mm) the high forward reach shall be 44" (1120mm) maximum and the reach depth shall be 25" (635mm) maximum.

SPECIFICATION:

Surface-mounted soap dispenser shall be Type-304 stainless steel with satin-finish. Corrosion-resistant valve shall dispense commercially marketed all-purpose hand soaps. To prevent corrosion, use only chloride-free pH-netural liquid soaps. Valve shall be operable with one hand and with less than 5 pounds of force (22.2 N) to comply with accessible design guidelines (including ADAAG in U.S.A.). Front of soap dispenser shall have same degree of arc and match other Bobrick ConturaSeries accessories in the washroom. Radius on corners and edges of soap dispenser shall complement other Bobrick ConturaSeries washroom accessories. Container body and back plate shall be epoxy-sealed to prevent warping and leakage. Soap dispenser shall have concealed, vandal-resistant mounting. Locked, hinged stainless steel lid for top filling shall require special key to open. Capacity shall be 40-fl oz (1.2-L).

Surface-Mounted Stainless Steel Soap Dispenser shall be Model B-4112 of Bobrick Washroom Equipment, Inc., Clifton Park, New York; Jackson, Tennessee; Los Angeles, California; Bobrick Washroom Equipment Company, Scarborough, Ontario; Bobrick Washroom Equipment Pty. Ltd., Australia; and Bobrick Washroom Equipment Limited, United Kingdom.

The illustrations and descriptions herein are applicable to production as of the date of this Technical Data Sheet.
The manufacturer reserves the right to, and does from time to time, make changes and improvements in designs and dimensions.

Revised 1/22/18 Printed in U.S.A.
© 2018 by Bobrick Washroom Equipment, Inc.

BOBRICK

Technical Data

VINYL SHOWER CURTAINS

204-2
204-3

Specify Part Required: ❑ 204-2 42" wide x 72" high (1065 x 1830mm)
❑ 204-3 70" wide x 72" high (1780 x 1830mm)

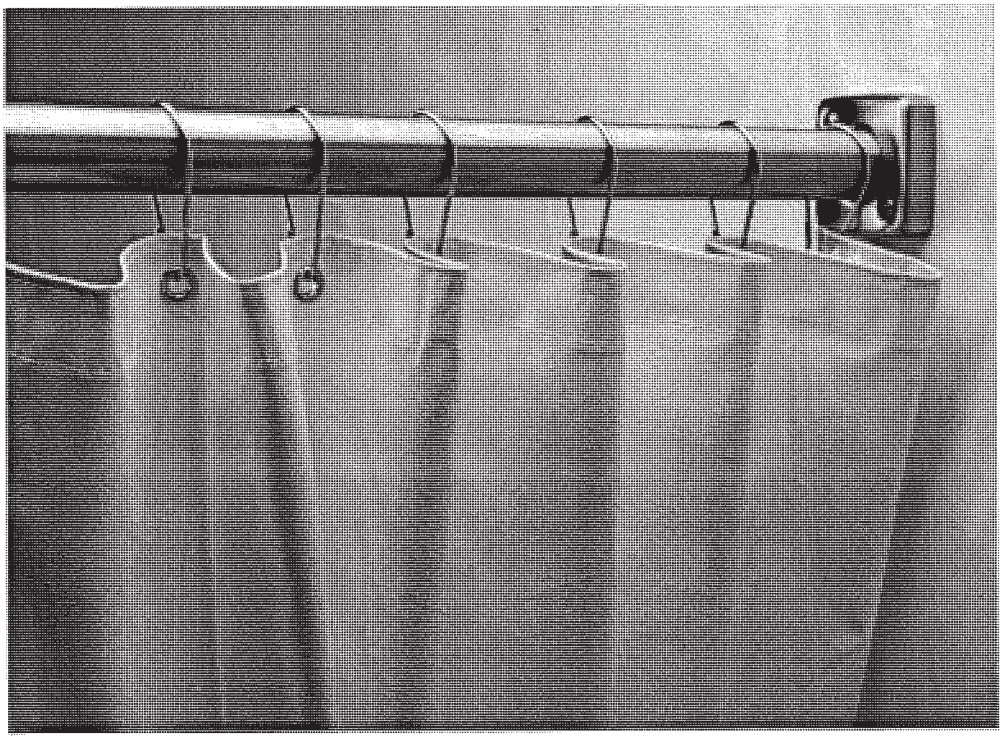

MATERIALS:

Opaque, matte white vinyl 0.008" (0.2mm) thick, containing antibacterial and flame-retardant agents. Nickel-plated brass grommets along top, one every 6" (150mm). Bottom and sides are hemmed.

OPERATION:

Hooks available as optional accessory: order Bobrick Part No. 204-1. 204-2 shower curtain, 42" wide x 72" high (1065 x 1830mm), requires 7 hooks. 204-3 shower curtain, 70" wide x 72" high (1780 x 1830mm), requires 12 hooks.

INSTALLATION:

Recommended for use with Bobrick stainless steel shower curtain hooks on Bobrick stainless steel shower curtain rods: Models B-207, B-6047, and B-6107.

SPECIFICATION:

Shower curtains shall be opaque, matte white vinyl 0.008" (0.2mm) thick, containing antibacterial and flame-retardant agents (Formulated to meet CFSM Title 19.13115), and shall have nickel-plated brass grommets along top. Bottom and sides shall be hemmed.

Vinyl Shower Curtains shall be Model _____ (insert model number) of Bobrick Washroom Equipment, Inc., Clifton Park, New York; Jackson, Tennessee; Los Angeles, California; Bobrick Washroom Equipment Company, Scarborough, Ontario; Bobrick Washroom Equipment Pty. Ltd., Australia; and Bobrick Washroom Equipment Limited, United Kingdom.

The illustrations and descriptions herein are applicable to production as of the date of this Technical Data Sheet.
The manufacturer reserves the right to, and does from time to time, make changes and improvements in designs and dimensions.

Revised 6/03/16 Printed in U.S.A.
© 2016 by Bobrick Washroom Equipment, Inc.

BOBRICK

Technical Data

STAINLESS STEEL SHOWER CURTAIN HOOK

204-1

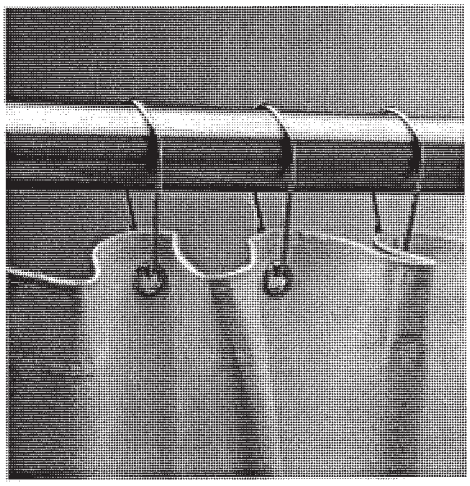

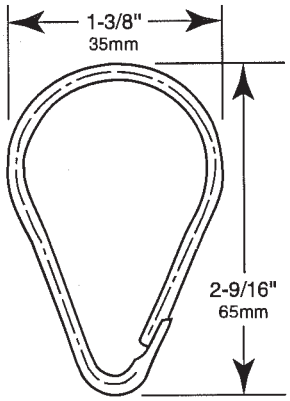

MATERIALS:

18-8, Type-304, 0.09" (2.28mm) diameter stainless steel.

OPERATION:

Shower curtain hooks can be used with 1" and 1-1/4" (25 and 32mm) diameter shower curtain rods.

Designer's Note: 72" (1830mm) high shower curtains of opaque white vinyl are available from Bobrick as an optional accessory. Order Part No. 204-2 for 42" (1065mm) wide curtains (requires 7 hooks) or Part No. 204-3 for 70" (1780mm) wide curtains (requires 12 hooks).

INSTALLATION:

Hooks snap open to allow placement on 1" (25mm) or 1-1/4" (32mm) diameter shower curtain rods. Recommended for use with Bobrick Models B-207, B-4207, B-6047, and B-6107 stainless steel shower curtain rods.

SPECIFICATION:

Shower curtain hooks shall be 0.09" (2mm) diameter, type-304 stainless steel. Hooks shall be usable with 1" and 1-1/4" (25 and 32mm) diameter shower curtain rods.

Stainless Steel Shower Curtain Hooks shall be Part No. 204-1 of Bobrick Washroom Equipment, Inc., Clifton Park, New York; Jackson, Tennessee; Los Angeles, California; Bobrick Washroom Equipment Company, Scarborough, Ontario; Bobrick Washroom Equipment Pty. Ltd., Australia; and Bobrick Washroom Equipment Limited, United Kingdom.

The illustrations and descriptions herein are applicable to production as of the date of this Technical Data Sheet.
The manufacturer reserves the right to, and does from time to time, make changes and improvements in designs and dimensions.

Revised 4/10/18 Printed in U.S.A.
© 2018 by Bobrick Washroom Equipment, Inc.

BOBRICK

Technical Data

ClassicSeries® EXTRA-HEAVY-DUTY SHOWER CURTAIN ROD

B-6047

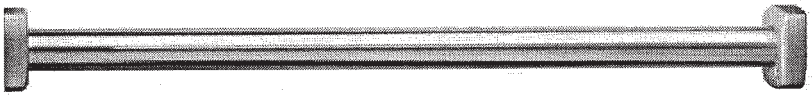

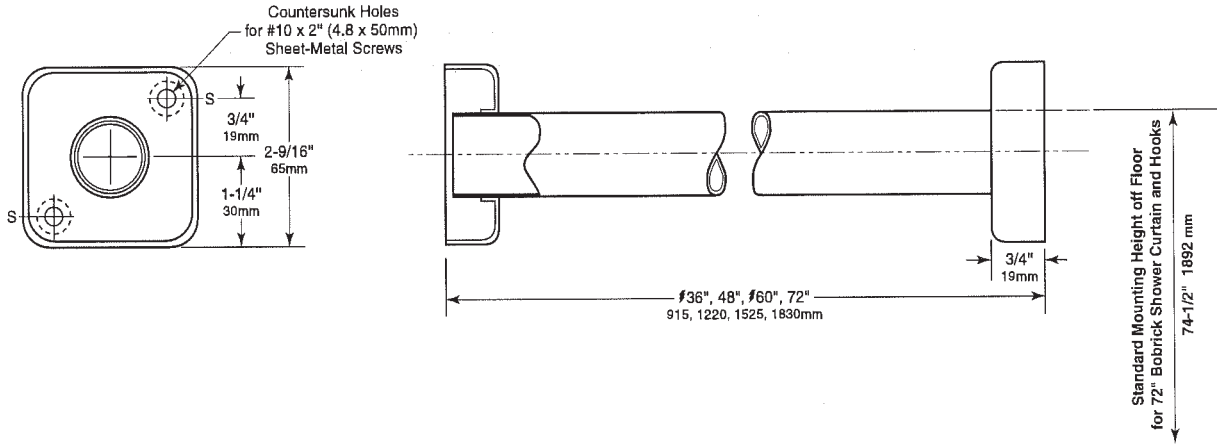

MATERIALS:

Curtain Rod — 18-8, Type-304, 18-gauge (1.2mm) stainless steel tubing with satin finish. 1-1/4" (32mm) outside diameter. Available in lengths from 36" (915mm) up to 72" (1830mm).

Flanges — 18-8, Type-304, 20-gauge (1.0mm) stainless steel with satin finish. One-piece, die-formed.

INSTALLATION:

Slide flanges onto curtain rod. Position flanges against wall and secure with #10 x 2" (M4.8 x 50mm) Phillips oval-head, stainless steel, sheet-metal screws, furnished by manufacturer, at points indicated by an *S*. For plaster or dry wall construction, provide concealed backing to comply with local building codes, then secure flanges with sheet-metal screws furnished. For other wall surfaces, provide fiber plugs or expansion shields for use with sheet-metal screws furnished, or provide 1/8" (3mm) toggle bolts or expansion bolts.

SPECIFICATION:

Shower curtain rod shall be Type-304, 18-gauge (1.2mm) stainless steel with satin finish and have outside diameter of 1-1/4" (30mm). One-piece, die-formed flanges shall be Type-304, 20-gauge (1.0mm) stainless steel with satin finish.

Shower Curtain Rod shall be Model B-6047 x _____ (insert length) of Bobrick Washroom Equipment, Inc., Clifton Park, New York; Jackson, Tennessee; Los Angeles, California; Bobrick Washroom Equipment Company, Scarborough, Ontario; Bobrick Washroom Equipment Pty. Ltd., Australia; and Bobrick Washroom Equipment Limited, United Kingdom.

The illustrations and descriptions herein are applicable to production as of the date of this Technical Data Sheet.
The manufacturer reserves the right to, and does from time to time, make changes and improvements in designs and dimensions.

Revised 4/20/17 R/A, S/A Printed in U.S.A.
© 2017 by Bobrick Washroom Equipment, Inc.

BOBRICK

Technical Data

COAT HOOK

B-542
B-5426

Specify Model Required:

- ☑ B-542 Satin-finish stainless steel
- ☐ B-5426 Bright Polished stainless steel

4 units

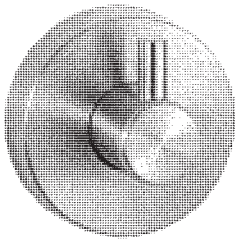

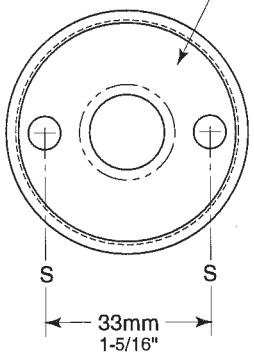

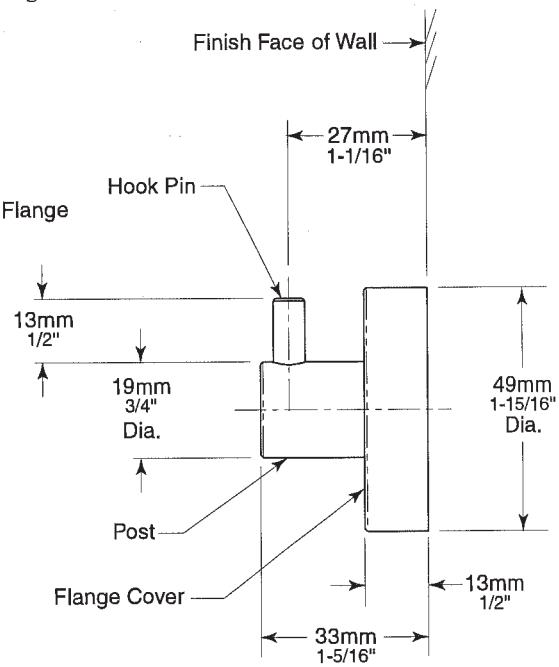

MATERIAL:

Post — 18-8, type-304, 19mm (3/4") diameter, solid stainless steel rod. Post and Concealed Mounting Threaded Flange are machined as one piece.

Hook Pin — 18-8, type-304, 6.4mm diameter (1/4"), solid stainless steel rod with thread to screw into Post.

Concealed Mounting Threaded Flange — 18-8, type-304, 5.6mm (7/32") thick, stainless steel plate with thread on outside edge for fastening cover. 46mm (1-13/16") outside diameter with two holes for attachment to wall.

Threaded Flange Cover — 18-8, type-304, 1.4mm (17-gauge), machined stainless steel. 49mm (1-15/16") diameter 13mm (1/2") deep. Cover fastens over mounting flange to conceal mounting screws.

INSTALLATION:

For plaster or dry wall construction, provide concealed backing to comply with local building codes, then secure unit with sheet-metal screws (not furnished). For other wall surfaces, provide fiber plugs or expansion shields for use with sheet-metal screws (not furnished), or provide 3mm (1/8") toggle bolts or expansion bolts.

For partitions with particle-board or other solid core, secure with sheet-metal screws (not furnished), or provide through-bolts, nuts, and washers. For hollow-core metal partitions, provide solid backing into which the sheet-metal screws (not furnished) can be secured.

SPECIFICATION:

Coat Hook shall be type-304 stainless steel with _____ (insert one satin finish or bright polished) finish. Coat Hook shall have 19mm (3/4") diameter Post with 6.4mm (1/4") diameter Hook Pin. Concealed mounting flange shall be 5.6mm (7/32") thick stainless steel plate, 46mm (1-13/16") outside diameter and equipped with two screw holes for attachment and thread on outside edge to fasten cover. Threaded flange cover shall be 1.4mm (17-gauge) stainless steel, 49mm (1-15/16") diameter and shall fasten over mounting flange to conceal mounting screws. Post and mounting flange are to be machined as one piece.

Coat Hook shall be Model _____ (insert Model number) of Bobrick Washroom Equipment, Inc., Clifton Park, New York; Jackson, Tennessee; Los Angeles, California; Bobrick Washroom Equipment Company, Scarborough, Ontario; Bobrick Washroom Equipment Pty. Ltd., Australia; and Bobrick Washroom Equipment Limited, United Kingdom.

The illustrations and descriptions herein are applicable to production as of the date of this Technical Data Sheet.
The manufacturer reserves the right to, and does from time to time, make changes and improvements in designs and dimensions.

Revised 8/27/15
© 2015 by Bobrick Washroom Equipment, Inc.

BOBRICK

Technical Data

FRAMELESS STAINLESS STEEL MIRROR

B-1556 SERIES

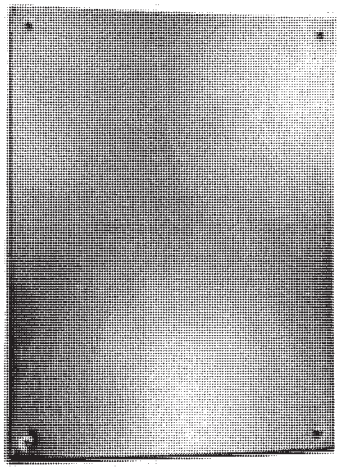

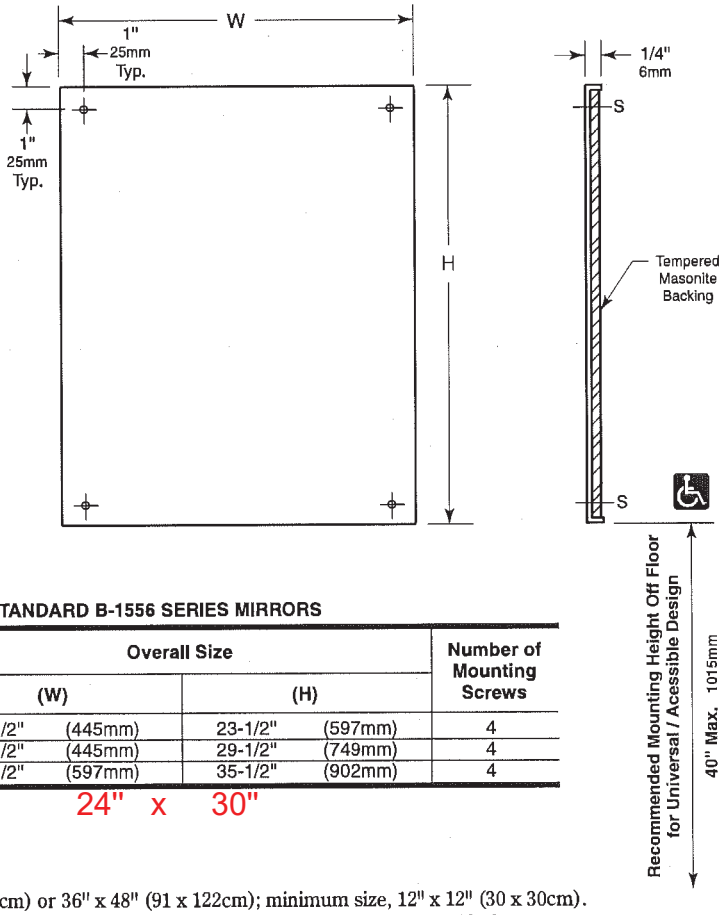

STANDARD B-1556 SERIES MIRRORS

Model No.	Overall Size (W)		Overall Size (H)		Number of Mounting Screws
B-1556 1824	17-1/2"	(445mm)	23-1/2"	(597mm)	4
B-1556 1830	17-1/2"	(445mm)	29-1/2"	(749mm)	4
B-1556 2436	23-1/2"	(597mm)	35-1/2"	(902mm)	4

B-1556-2430 24" x 30"

Designer's Notes:

1. Special-order sizes available on request.
2. Maximum size mirror available, 48" x 36" (122 x 91cm) or 36" x 48" (91 x 122cm); minimum size, 12" x 12" (30 x 30cm).
3. Overall width and height of custom 1556-series mirrors will be 1/2" (12mm) smaller than dimension specified.

MATERIALS:

Mirror — 18-8, type-304, 20 gauge (0.9mm) stainless steel polished to a No. 8 mirror finish. Mirror has 1/4" (6mm) return.

Backing — 1/4" (6mm) thick tempered masonite.

INSTALLATION:

Mount mirror on wall with four #8 oval head screws, furnished by manufacturer, at points indicated by an *S*. For plaster or dry wall construction, provide concealed backing to comply with local building codes, then secure unit with sheet-metal screws furnished. For other wall surfaces, provide fiber plugs or expansion shields for use with sheet-metal screws furnished, or provide 1/8" (3mm) toggle bolts or expansion bolts.

SPECIFICATION:

Frameless stainless steel mirror shall be 18-8, type-304, 20-gauge (0.9mm) stainless steel polished to a No. 8 mirror finish. Mirror shall have 1/4" (6mm) return concealing 1/4" (6mm) tempered masonite backing. Four corner countersunk holes provide flush fit of mounting screws with mirror surface.

Mirror shall be Model B-1556 _____ (insert width and height) of Bobrick Washroom Equipment, Inc., Clifton Park, New York; Jackson, Tennessee; Los Angeles, California; Bobrick Washroom Equipment Company, Scarborough, Ontario: Bobrick Washroom Equipment Pty. Ltd., Australia; and Bobrick Washroom Equipment Limited, United Kingdom.

The illustrations and descriptions herein are applicable to production as of the date of this Technical Data Sheet.
The manufacturer reserves the right to, and does from time to time, make changes and improvements in designs and dimensions.

B-1556 Rev. 4/01/16 P/A, S/A Printed in U.S.A.
© 2016 by Bobrick Washroom Equipment, Inc.

SUBMITTALS IDENTIFICATION SHEET

PROJECT: Wastewater Treatment Plant Upgrade
Iqaluit, Nunavut

NUNAMI
STANTEC LIMITED
1088C Noble House
Iqaluit NU
www.stantec.com

CONTRACTOR: Kudlik Construction Ltd, Project 2018-062

Telephone: 867-979-1166

E-mail: srousseau@kudlik.biz

SUBCONTRACTOR:

Person responsible:

Telephone: () E-mail:

PRODUCT SUBMITTED:

☐ As Specified

☐ Alternate

SUPPLIER or MANUFACTURER: Canac

Person responsible:

Telephone: E-mail: patrick.belanger@canac.ca

DESCRIPTION OF SUBMITTAL: sealant

# of pages:

Reference to drawings:

Reference to specs:

Division: 07 Section: 07 92 00

REMARKS:

Please choose color for Dymonic and Dymeric

REVIEW AND COMMENTS (for use by Consultants):

Colour to match adjacent material

STANTEC PROJECT #: 110126045

SUBMITTAL # SU020

This review by Stantec is for general conformance with the design concept of Stantec's design of the:

☑ Architectural ☐ Electrical
☐ Structural ☐ Other
☐ Mechanical

component(s) only and does not mean that Stantec has verified or approves the shop drawing(s). The Contractor remains solely responsible for the shop drawing(s) and this review by Stantec does not relieve the Contractor of the Contractor's responsibility for errors or omissions in the shop drawing(s) or for meeting all requirements of the contract documents. This review does not mean that Stantec approves the detailed design inherent in the shop drawing, responsibility for which shall remain with the Contractor submitting same, nor does this review mean that Stantec accepts any deviation of the shop drawing(s) from the contract documents. The Contractor is responsible for confirming all dimensions and correlating them at the job site, for all construction means, methods and techniques, and for coordination of construction work of all trades, including coordination of all shop drawings.

Stantec

☑ REVIEWED

☐ REVIEWED, AS NOTED

☐ REVISE AND RESUBMIT

☐ NOT REVIEWED

DATE 2018-06-29

BY Jason King

Review of this submission is for compliance with general intent of the contract. This review does not relieve the Sub-Contractor, Supplier or Manufacturer of responsibility for error or omissions in the submission or the responsibility of meeting all requirements of the contract documents. Any deviation from the contract documents initiated by the Sub-Contractor, Supplier or Manufacturer shall be at their sole risk. QUANTITIES AND DETAIL DIMENSIONS ARE THE SUB-CONTRACTORS OR SUPPLIERS RESPONSIBILITY. VERIFY DATA WITH FIELD DIMENSIONS.

SUBMITTAL TRACKING No.: **SU-020**

2018-06-29

Commercial Sealants & Waterproofing

Dymeric® 240FC

Fast-Curing, Multi-Component, Polyurethane Sealant

Product Description

Dymeric® 240FC is a gun-grade, multi-component, chemically-curing, polyurethane sealant that includes a tintable base, curative packet, and a choice of 70 standard colors. A Limestone Pretinted version is also available.

Basic Uses

Dymeric 240FC's applications range from pre-cast tilt-up concrete, masonry, and exterior insulating and finishing systems (EIFS), to metal curtain walls, and perimeter joints around doors and windows. It can also be used in certain water immersed applications.

Features and Benefits

- Dymeric 240FC is an all-around general-purpose sealant that provides flexible, long life and durable waterproofing for both new construction and restoration projects in a fast curing formulation.
- Dymeric 240FC is formulated to be a lightweight material designed for extremely easy mixing, even in cold temperatures.
- Dymeric 240FC is a solvent-free product that is compliant with all existing VOC regulations. Please contact your local Sales Representative or Tremco's Technical Service Department for information regarding immersed conditions.

Coverage Rates

308 linear feet of joint per gallon for a 1/4" X 1/4" joint. For specific coverage rates that include joint size, and usage efficiencies, visit our website usage calculator at www.tremcosealants.com.

Packaging

1.5-gal (5.7-L) and 3-gal (11.4-L) kits with pre-measured pouches of curing agent.

Colors

Dymeric 240FC is available as a base and curative that can be tinted to your choice of 70 standard colors, or we can match a special color for you. A color pak is not required for the pretint version.

Availability

Immediately available from your local Tremco Field Representative, Tremco Distributor or Tremco Warehouse.

Storage

Store Dymeric 240FC in original, undamaged packaging in a clean, dry, protected location with temperatures between 40 to 110 ˚F (5 to 43 ˚C).

Applicable Standards

Dymeric 240FC meets or exceeds the requirements of the following specifications:

- ASTM C920-02 Type M, Grade NS, Class 50, Use T, NT, M, A and O (granite), I (Class 2)
- U.S. Federal Specification TT-S-00227E Class A, Type II
- CAN/CGSB 19.24-M90 Class B, Type II
- UL 2079 (ASTM E1966), CAN/ULC S115

Fire Rated Systems

CJ-D-0015. CJ-D-0016, CJ-D-0017, FF-D-1061, FF-D-1181, FF-S-1030, FF-S-1046, FW-D-1057, FW-D-1112, FW-S-1024, FW-S-1014, HW-D-1052, HW-D-1119, HW-S-1011, WW-D-1052, WW-D-1197, WW-S-1033

Limitations

- Pot life (after curative packet added): 3.0 to 3.5 hr at 77 °F (25 °C), 1.5 to 2.0 hr at 95 °F (35 °C), 1.0 to 1.5 hr at 120 °F (48.9 °C).
- Do not apply Dymeric 240FC to damp or contaminated surfaces.
- Always utilize the accompanying MSDS for information on Personal Protective Equipment (PPE) and Health Hazards.
- The use of a Tremco Universal Color Pak is always required except with the pretinted Limestone.

Substrate Preparation

Surfaces must be sound, clean, and dry. All release agents, existing waterproofing, dust, loose mortar, laitance, paints, or other finishes or field applied coating must be removed. This can be accomplished with a thorough wire brushing, grinding, sandblasting, or solvent washing, depending on the contamination.

Tremco recommends that surface temperatures be 40 °F (5 °C) or above at the time the sealant is applied. If sealant must be applied in temperatures below 40 °F, please refer to the Tremco Guide for Applying Sealants in Cold Weather that can be found on our website at www.tremcosealants.com

Priming

Dymeric 240FC typically adheres to common construction substrates without primers; however, Tremco always recommends that mock-up or field adhesion test be performed on the actual materials being used on the job to verify the need for a primer, proper cleaning and prep requirements. The field adhesion test can be found in appendix X1 of ASTM C1193, Standard Guide for Use of Joint Sealants.

Where deemed necessary, use Tremco Primer #191 QD for porous substrates and TREMprime Non-Porous Primer for metals and plastics.

Application

Mix in accordance with instructions on the pail using the entire pre-measured curative packet and your selected Universal Color Pak. One color pack should be used with 1.5-gal pails and 2 color packs should be used in the 3-gal pail. Mix all three parts for a minimum of 6 min, scraping the sides of the pail and until there are no color striations. A color pak is not required for the pretint version.

Ensure the backer rod is properly friction-fitted and any primers have been applied.

Apply sealant with conventional caulking equipment filling the joint from the backer rod up. Immediately tool the sealant with a spatula to ensure intimate contact with the joint walls.

Dry tooling is always preferred, although xylene can be used in limited amounts to slick the spatula if needed.

For a cleaner finish, mask the sides of the joint with tape prior to filling.

Joint Design

Dymeric 240FC may be used in any vertical or horizontal joint designed in accordance with accepted architectural/engineering practices. Joint width should be 4 times anticipated movement, but not less than 1/4" (6.4 mm).

Joint Backing

Closed cell or reticulated polyethylene backer rod is recommended as joint backing to control sealant depth and to ensure intimate contact of sealant with joint walls when tooling. Where depth of joint will prevent the use of backer rod, an adhesive backed polyethylene tape (bond breaker tape) should be used to prevent three-sided adhesion. All backing should be dry at time of sealant application.

Sealant Dimensions

W = Sealant width, D = Sealant depth, C = Contact area.

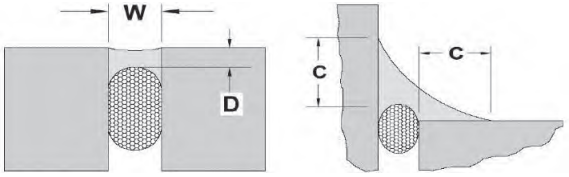

EXPANSION JOINTS - The minimum width and depth of any sealant application should be 1/4" by 1/4" (6 mm by 6 mm).The depth (D) of sealant may be equal to the width (W) of joints that are less than 1/2" wide.

For joints ranging from 1/2" to 1" (13 mm to 25 mm) wide, the sealant depth should be approximately one-half of the joint width. The maximum depth (D) of any sealant application should be 1/2" (13 mm). For joints that are wider than 1" (25 mm) contact Tremco's Technical Service Department, or your local Tremco field representative.

WINDOW PERIMETER- For fillet beads, or angle beads around windows and doors, the sealant should exhibit a minimum surface contact area [C] of 1/4" onto each substrate, with provisions for release at the heel of the angle using backer rod or bond breaker tape.

Cure Time

At 72 ˚F (22 ˚C) Dymeric 240FC will reach full cure in about 48 hr. As the temperatures decrease, the cure time will increase. A good rule of thumb is an additional 24 hr for every 10 °F decrease in temperature.

Clean Up

Excess sealant and smears adjacent to the joint interface can be carefully removed with xylene or mineral spirits before the sealant cures. Any utensils used for tooling can also be cleaned with xylene or mineral spirits.

Warranty

Tremco warrants its Products to be free of defects in materials, but makes no warranty as to appearance or color. Since methods of application and on-site conditions are beyond our control and can affect performance, Tremco makes no other warranty, expressed or implied including warranties of MERCHANTABILITY and FITNESS FOR A PARTICULAR PURPOSE with respect to Tremco Products. Tremco's sole obligation shall be, at its option, to replace or refund the purchase price of the quantity of Tremco Products proven to be defective, and Tremco shall not be liable for any loss or damage.

Please refer to our website at www.tremcosealants.com for the most up-to-date Product Data Sheets.

NOTE: All Tremco Safety Data Sheets (SDS) are in alignment with the Globally Harmonized System of Classification and Labelling of Chemicals (GHS) requirements.

TYPICAL PHYSICAL PROPERTIES

PROPERTY	TEST METHOD	TYPICAL VALUES
Type		Two component gun-grade urethane sealant
Color		Dymeric 240FC is available as a base and curative that can be tinted to your choice of 70 standard colors, or we can match a special color for you. A color pak is not required for the pretint version.
Solids		99%
Specific Gravity		1.06
Application		Gun-grade sealant, applied with typical caulking equipment
Low Temp. Flexibility	ASTM C793	Passes at -15F (-9C)
Hardness, durometer scale "A"	ASTM C661	30 ±3
Weight Loss	ASTM C1246	Passes
Skin Time	ASTM C679	3 hr
Tack Free Time	73.4°F (23°C) 50% RH	19 hr
Stain and Color Change	ASTM C510	No stain, No color change
Adhesion-in-Peel	ASTM C794	>10 pli (pass)
Accelerated Weathering	ASTM C793	Pass
Movement Capability	ASTM C719*	±50%

*Modified

Tremco Commercial Sealants & Waterproofing

3735 Green Rd
Beachwood OH 44122
216.292.5000 / 800.321.7906

1451 Jacobson Ave
Ashland OH 44805
419.289.2050 / 800.321.6357

220 Wicksteed Ave
Toronto ON M4H1G7
416.421.3300 / 800.363.3213

1445 Rue de Coulomb
Boucherville QC J4B 7L8
514.521.9555

www.tremcosealants.com

Choose color

TREMCO Dymeric® 240FC

Colors shown are approximate and may not reflect the shade precisely. Different lighting conditions can influence color appearance, for truer color please view in Daylight. Some colors may require a minimum quantity. Custom colors are available upon request. Please contact Tremco Customer Service for more information.
US – 800-321-7906
CAN – 800-363-3213
www.tremcosealants.com




ANTIQUE PINK

PRECAST WHITE

MINT


BAPTIST BRICK


DUSTY ROSE

IVORY


LIMESTONE


BOYSENBERRY


ADOBE TAN


CHAMPAGNE


GREY STONE


DESERT TAUPE




JEFFERSON CITY PINK


PEARL ASH


NATURAL CLAY


CHARCOAL


MELON


REDWOOD TAN


STONE


MILE GRAY


DARK GRAY


KELLY PINK


BANNER RED


LIGHT BRONZE


BLUE SPRUCE


BRONZE


RUSTIC RED


BRICK RED


BLUE GRAY


DARK GREEN


DARK BRONZE




RIVER ROUGE RED


NAVY BLUE


HARTFORD GREEN


BLACK

Product Description
Dymeric® 240FC is a multi-component, chemically-curing, polyurethane sealant that includes a tintable base, curative packet and a choice of 70 standard colors. Its fast curing formula provides flexible and durable waterproofing for both new construction and restoration projects.

Tremco Commercial Sealants & Waterproofing
3735 Green Road, Beachwood, OH 44122 // Phone: 216.292.5000 // 800.321.7906
220 Wicksteed Avenue, Toronto, ON M4H 1G7 // Phone: 416.421.3300 // 800.363.3213
1451 Jacobson Avenue, Ashland OH 44805 // Phone: 419.289.2050 // 800.321.6357
www.tremcosealants.com

0416/DYM240FCCC

MOONLIGHT
ANTIQUE WHITE
AMARILLO WHITE
SUPER WHITE

NATURAL WHITE
BUCKSKIN
LIGHT CREAM
BRITE WHITE

DOVER SKY
GEOGRAPHIC BEIGE
SUNSET YELLOW
CHINA WHITE

ANODIZED ALUMINUM
VAN DYKE
ALMOND
COTTON

SUEDE
OFF WHITE
EGGSHELL CREAM
PARCHMENT
BEACH

GRAY
MOUNTAIN FOG
SANDSTONE
BUILDER'S BEIGE
MANOR WHITE

INDEPENDENCE GRAY
ALUMINUM
SANDALWOOD BEIGE
BUFF
ADOBE ACCENT

ALUMINUM STONE
MEDIUM GRAY
BEIGE
TOAST TAN

07 92 00 all around wall where it is not fire rated

TREMCO
Commercial Sealants & Waterproofing

Acoustical/Curtainwall Sealant

One-Part, Non-Skinning, Sound Damping Sealant

Product Description

Tremco® Acoustical/Curtainwall Sealant is a single component, non-skinning, non-hardening synthetic rubber sealant.

Basic Uses

Tremco Acoustical/Curtainwall Sealant was developed for acoustical sealing of drywall partitions, curtainwalls, corridors and party walls. This sealant also is used as a lap joint and perimeter sealant for polyethylene vapor barriers over fiberglass batt or other insulations and may be used in contact with polystyrene.

Features and Benefits

The application of Tremco Acoustical/Curtainwall Sealant greatly increases the Sound Transmission Class (STC value) of a system and reduces the decibel level when one or more beads are applied to a joint. See edge details.

Availability

Immediately available from your local Tremco Field Representative, Tremco Distributor or Tremco Warehouse.

Coverage Rates

27 linear feet of joint per quart cartridge for 1/4" x 1/4" joints. For specific coverage rates that include joint size and usage efficiencies, visit our website usage calculator at www.tremcosealants.com.

Packaging

10.1-oz (300-mL), 1-qt (850-mL) cartridges,

and 5-gal (19-L) pails

Colors

Dark Gray

Limitations

- Do not apply to damp or contaminated surfaces.
- Use with adequate ventilation.

Substrate Preparation

For good adhesion, the joint interface must be sound, clean and dry. Any surface damage, dirt, dust, loose particles or other contaminants which may inhibit adhesion shall be removed from the surfaces prior to the application of the sealant.

Applicable Standards

- Conforms to Canadian CAN/CGSB 19.21 M87.

Priming

Priming is not required.

Application

Sealant is used in the design and construction of drywall partitions between individual residential units and along corridor walls.

In the application, the sealant must inhibit air movement and buffer vibration, both of which contribute to sound transmission.

Tremco Acoustical/Curtainwall Sealant is easy to apply with conventional caulking equipment.

Apply bead onto substrate and cover within 24 hours to prevent tracking and dirt attraction that may inhibit adhesion.

Cure Time

Tremco Acoustical/Curtainwall Sealant does not cure or dry. It is a non-skinning, non-hardening formula that will remain viscous and tacky to further aid in decreasing sound transmission.

Clean Up

Excess sealant and smears adjacent to the joint interface can be carefully removed with xylene or mineral spirits. Any utensils used for tooling can also be cleaned with xylene or mineral spirits.

Warranty

Tremco warrants its Products to be free of defects in materials, but makes no warranty as to appearance or color. Since methods of application and on-site conditions are beyond our control and can affect performance, Tremco makes no other warranty, expressed or implied including warranties of MERCHANTABILITY and FITNESS FOR A PARTICULAR PURPOSE, with respect to Tremco Products. Tremco's sole obligation shall be, at its option, to replace, or refund the purchase price of the quantity of Tremco Products proven to be defective and Tremco shall not be liable for any loss or damage.

Please refer to our website at www.tremcosealants.com for the most up-to-date Product Data Sheets.

NOTE: All Tremco Safety Data Sheets (SDS) are in alignment with the Globally Harmonized System of Classification and Labelling of Chemicals (GHS) requirements.

TYPICAL PHYSICAL PROPERTIES

PROPERTY	TEST METHOD	TYPICAL VALUES
Resistance to Sag	CGSB 7.1	Passes
Extrusion Rate	CGSB 3.1	Passes
Viscosity	CGSB Brookfield	1,000,000 cps
Loss of Mass	CGSB 5.1	Passes
Resistance to Staining & Bleeding	CGSB 9.2	Passes
Low Temperature Flexibility	CGSB 11.1	Passes. -10˚C
Cracking/Blistering	CGSB 19.2	Passes
Shear Modulus	using GR component	45,000 N/M²
Density		1720 Kg/M³

EDGE DETAIL	STC VALUE		COMMENTS
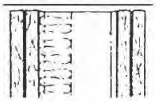	Uncaulked	19	The open-edge crack dropped the STC value from 54 lab result to 19 through direct leakage
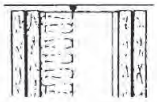	Single bead under track	30	This bead closed void but did not seal leakage around the joint between wallboard and track.
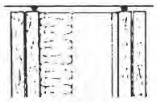	Two beads. One under each inner layer of gypsum board	48	The beads closed void and sealed leakage around track. A tremend improvement in performance.
	Four beads. One under each layer of gypsum board	51	The void is closed; no leaks around track and wallboard; 3 db improvement in class is worthwhile.
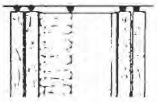	Five beads. Two on each side plus one under the track	52	Void is closed. No leakage, but 1 db improvement in class does not justify expense of the fifth bead.
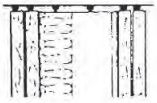	Six beads. Two at each side plus two under the track	54	Void is closed and six beads prevent any possible leakage. Again, improvement does not justify additional expense of two extra beads.

Tremco Commercial Sealants & Waterproofing

3735 Green Rd
Beachwood OH 44122
216.292.5000 / 800.321.7906

1451 Jacobson Ave
Ashland OH 44805
419.289.2050 / 800.321.6357

220 Wicksteed Ave
Toronto ON M4H1G7
416.421.3300 / 800.363.3213

1445 Rue de Coulomb
Boucherville QC J4B 7L8
514.521.9555

www.tremcosealants.com

07 92 00 arround opening interrior

Dymonic® 100

High-Performance, High-Movement, Single-Component, Polyurethane Sealant

Product Description

Dymonic® 100 is a high-performance, high-movement, single-component, medium-modulus, low-VOC, UV-stable, non-sag polyurethane sealant.

Basic Uses

Dymonic 100 is a durable, flexible sealant that offers excellent performance in moving joints and exhibits tenacious adhesion once fully cured. Typical applications for Dymonic 100 include expansion and control joints, precast concrete panel joints, perimeter caulking (windows, doors, and panels), aluminum, masonry and vinyl siding. Dymonic 100 is also an excellent choice as a fluid applied flashing material in rough opening perimeters for fenestration/window, door and curtain wall applications.

Features and Benefits

- Can adhere to damp or green concrete and has a skin time of 2 hr with a tack-free time of 6 to 8 hr to significantly reduce dirt attraction.
- Movement capability of +100/-50% in typical field conditions, is low VOC, paintable, jet fuel-resistant, and will not crack, craze or yellow under extreme UV exposure.
- Suitable for water immersion and will not out gas.
- Formulated with an innovative polymer technology, similar to TREMproof® 250GC and Vulkem® 45SSL, Dymonic 100 is highly versatile and has a unique capability to adhere to damp or green concrete and will not out gas.
- Compatible and can be coated over with Tremco's Vulkem Deck Coatings, ExoAir® Air Barrier products and the cold, fluid-applied TREMproof® line of below-grade waterproofing products.

Availability

Dymonic 100 is immediately available from your local Tremco Sales Representative, distributor, or warehouse.

Coverage Rates

308' of joint per gallon for a 1/4" x 1/4" (6 mm x 6 mm) joint. For specific coverage rates that include joint size, and usage efficiencies, visit our website usage calculator at www.tremcosealants.com

Packaging

- 10.1-oz (300-mL) cartridges
- 20-oz (600-mL) sausages

Colors

Almond, Aluminum Stone, Anodized Aluminum, Beige, Black, Bronze, Buff, Dark Bronze, Gray, Gray Stone, Hartford Green, Ivory, Light Bronze, Limestone, Natural Clay, Off White, Precast White, Redwood Tan, Sandalwood, Stone, and White.

Shelf Life

1 year when stored at 40 to 110 °F (5 to 43 °C)

Storage

Store Dymonic 100 in original, undamaged packaging in a clean, dry, protected location with temperatures between 40 to 110 ˚F (5 to 43 ˚C).

Applicable Standards

- Dymonic 100 meets or exceeds the requirements of the following specifications:
- ASTM C920 Type S, Grade NS, Class 50, Use NT, T, M, A, O, I
- U.S. Federal Specification TT-S-00230C, Class A, Type II
- CAN/CGSB-19,13-M87
- International Code Council (ICC) Section R703.8 Flashing
- AAMA 714-15 Specification for Liquid-Applied Flashing
- NFPA 285 Listed Component

Fire Rated Systems

FF-D-1186, FW-D-1117, HW-D-1122, WW-D-1200, and BW-S-0006

Limitations

- Use with adequate ventilation.



- Always utilize the accompanying MSDS for information on Personal Protective Equipment (PPE) and Health Hazards.
- Not recommended for use in chlorinated, potable, heavy or waste water.
- Although Dymonic 100 is paintable, this does not imply adhesion to and compatibility with all paints. Consult Tremco Technical Bulletin No. S-09-05 for more information.

Substrate Preparation

Surfaces must be sound and clean. All release agents, existing waterproofing, dust, loose mortar, paints, other finishes or field applied coating must be removed. This can be accomplished with a thorough wire brushing, grinding, sandblasting, or solvent washing, depending on the contamination.

Tremco recommends that surface temperatures be 40 ˚F (5 ˚C) or above at the time the sealant is applied. If sealant must be applied in temperatures below 40 ˚F, please refer to the Tremco Technical Bulletin for Applying Sealants in Cold Conditions (No. S-08-44 rev 1) that can be found on our website at www.tremcosealants.com

Priming

Dymonic 100 typically adheres to common construction substrates without primers; anodized aluminum may require the use of primer. However, Tremco always recommends that a mock-up or field adhesion test be performed on the actual materials being used on the job to verify the need for a primer, proper cleaning and prep requirements. A description of the field adhesion test can be found in appendix X1 of ASTM C1193, Standard Guide for Use of Joint Sealants.

Where deemed necessary, use Vulkem® Primer #191 Low-VOC on porous substrates and TREMprime® Non-Porous Primer for metals or plastics.

Application

Dymonic 100 is easy to apply with conventional caulking equipment. Ensure that the backer rod is fitted properly for friction and that any necessary primers have been applied.

Fill the joint completely with a proper width-to-depth ratio, and then tool to ensure intimate contact of sealant with joint substrates.

Dry tooling is always preferred, although compatible wetting agents can be used in limited amounts to slick the spatula if needed after an initial pass.

For a cleaner finish, mask the sides of the joint with tape prior to filling.

Joint Design

Dymonic 100 may be used in vertical or horizontal joints designed in accordance with accepted architectural/engineering practices. Joint width should be 4 times anticipated movement but not less than 1/4" (6 mm).

Joint Backing

Polyethylene backer rod is recommended as joint backing to control sealant depth and ensure intimate contact of sealant with joint substrate when tooling. Where depth of joint will prevent the use of backer rod, an adhesive backed polyethylene tape (bond breaker tape) should be used to prevent three-sided adhesion. All backing should be dry at the time of sealant application.

Sealant Dimensions

W = Sealant width, D = Sealant depth, C = Contact area.

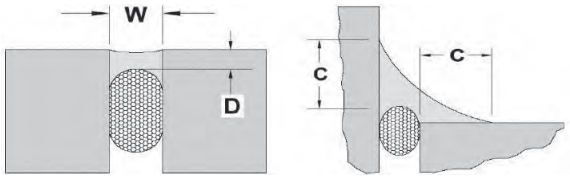

Expansion Joints- The minimum width and depth of any sealant application should be 1/4" x 1/4" (6 mm x 6 mm). The depth (D) of sealant may be equal to width (W) of joints less than 1/2" wide. For joints from 1/2" to 1" (13 mm to 25 mm) wide, the sealant depth should be approximately one-half of the joint width. The maximum depth (D) of any sealant application should be 1/2" (13 mm). For Joints that are wider than 1" (25 mm) contact Tremco Technical Services or your local Tremco Sales Representative.

Window Perimeter- For fillet beads, or angle beads around windows and doors, the sealant should exhibit a minimum surface contact area [C] of 1/4" (6 mm) onto each substrate, with provisions for release at the heel of the angle using backer rod or bond breaker tape.

Cure Time

Dymonic 100 generally cures at a rate of 3/32" per day at 75 °F (24 °C) and 50% RH. It will skin in 2 hr and be tack free in 6 to 8 hr. The cure time will increase as temperatures and/or humidity decrease. A typical rule of thumb is one additional day for every 10 °F decrease in temperature.

Clean Up

Excess sealant and smears adjacent to the joint interface can be carefully removed with xylene or mineral spirits before the sealant cures. Any utensils used for tooling can also be cleaned with xylene or mineral spirits.

Warranty

Tremco warrants its Products to be free of defects in materials, but makes no warranty as to appearance or color. Since methods of application and on-site conditions are beyond our control and can affect performance, Tremco makes no other warranty, expressed or implied including warranties of MERCHANTABILITY and FITNESS FOR A PARTICULAR PURPOSE with respect to Tremco Products. Tremco's sole obligation shall be, at its option, to replace or refund the purchase price of the quantity of Tremco Products proven to be defective, and Tremco shall not be liable for any loss or damage.

Please refer to our website at www.tremcosealants.com for the most up-to-date Product Data Sheets.

NOTE: All Tremco Safety Data Sheets (SDS) are in alignment with the Globally Harmonized System of Classification and Labelling of Chemicals (GHS) requirements.

TYPICAL PHYSICAL PROPERTIES

PROPERTY	TEST METHOD	TYPICAL VALUES
Type		Single component polyurethane sealant
Color		21 Standard Colors
Solids		98%
Specific Gravity		1.3302
Application		gun-grade sealant, applied with typical caulking equipment
Rheological Properties	ASTM C639	non-sag (NS), 0" of sag in channel
Hardness Properties	ASTM C661	40 +/-5
Weight Loss	ASTM C1246	Pass
Skin Time	ASTM C679	2 to 3 hr
Tack Free Time	73.4°F (23°C) 50% RH	6 to 8 hr
Stain and Color Change	ASTM C510	Pass
Adhesion to Concrete	ASTM C794	35 pli
Adhesion to Concrete After Immersion	ASTM C794	30 pli
Adhesion to Green Concrete	ASTM C794	>25 pli
Adhesion to Damp Concrete	ASTM C794	>20 pli
Effects of Accelerated Aging	ASTM C793	Pass
Movement Capability	ASTM C719	+/-50%
Movement Capability	ASTM C719* Modified	+100/-50%
Tensile Strength	ASTM D412	350 to 450 psi
% Elongation	ASTM D412	800 to 900%
Modulus at 100%	ASTM D412	75 to 85 psi
Tear Strength	ASTM D412	65 to 75 psi
Service Temperature		-40 to 180 °F (-40 to 82 °C)
Application Temperature		40 to 100 °F (4 to 37 °C) *
Smoke Development	ASTM E84	5
Fire Spread	ASTM E84	5
Fire Resistance of Assembly	NFPA 285	PASS
Crack Bridging	ASTM C1305	PASS
Nail Sealability	ASTM D1970 Section 7.9	PASS

*For temperatures below 40 °F, please refer to the Technical Bulletin, Cold Temperature Sealant Application Recommendations.

Tremco Commercial Sealants & Waterproofing

3735 Green Rd
Beachwood OH 44122
216.292.5000 / 800.321.7906

1451 Jacobson Ave
Ashland OH 44805
419.289.2050 / 800.321.6357

220 Wicksteed Ave
Toronto ON M4H1G7
416.421.3300 / 800.363.3213

1445 Rue de Coulomb
Boucherville QC J4B 7L8
514.521.9555

www.tremcosealants.com

Dymonic® 100
Standard Colors

Please choose color

Colors shown are approximate and may not reflect the shade precisely. Different lighting conditions can influence color appearance, for truer color please view in daylight. Colors are not stocked in all available package types. Minimum order quantities will apply for custom colors and alternative packaging. For more information, please contact Tremco Customer Service.



Dymonic® 100

High Performance, High Movement, Single-Component, Polyurethane Sealant

Dymonic® 100 is a medium modulus, low VOC, UV stable, non-sag polyurethane sealant.

Applicable Standards

ASTM C 920 Type S, Grade NS, Class 50, Use NT, T, M, A, O, I;
CAN/CGSB-19.13-M87; U.S. Federal Specification TT-S-00230C,
Class A, Type II; International Code Council (ICC) Section
R703.8 Flashing; NFPA 285 Listed Component.
AAMA 714-15 Specified for Liquid - Applied Flashing

Tremco Commercial Sealants & Waterproofing

3735 Green Road, Beachwood, OH 44122 // Phone: 216.292.5000 // 800.321.7906
220 Wicksteed Avenue, Toronto, ON M4H 1G7 // Phone: 416.421.3300 // 800.363.3213
1451 Jacobson Avenue, Ashland, OH 44805 // Phone: 419.289.2050 // 800.321.6457

1117/D100SD

07 92 00 tremco 100 doesn't exist we propose this product for acrylic latex as per spec

Tremflex® 834

Acrylic Latex Sealant

Product Description

Tremflex® 834 is a pure acrylic latex sealant formulated to provide a fast-setting pliable seal with minimal shrinkage.

Basic Uses

Tremflex 834 can be used for general purpose interior and exterior caulking and as a back-bedding glazing compound. It is also highly recommended as an acoustical seal in the construction of interior walls, ceilings and floors. It is suitable for use on vinyl, aluminum and wood siding as well as on bathroom and kitchen fixtures.

Features and Benefits

- Tremflex 834 is an easy gunning, non-staining, general purpose sealant formulated from the highest quality acrylic polymer to offer exceptional flexibility and workability for any commercial construction acrylic sealant application.
- It can be used indoors or outdoors and is tack-free in 15 min and ready to paint in 30 to 45 min with latex or oil-based paint.
- It also has been tested for acoustical properties to reduce sound transmissions when constructing partition walls.
- Class A Building Material

Availability

Immediately available from your local Tremco Field Representative, Tremco Distributor or Tremco Warehouse.

Coverage Rates

308' of joint per gal for a 1/4" x 1/4" (6 mm x 6 mm) joint. For specific coverage rates that include joint size, and usage efficiencies, visit our website usage calculator at www.tremcosealants.com

Packaging

10.1-oz (300-mL) cartridges

20-oz. (600-mL) sausages

5-gal (18.9-L) pails

Colors

Clear, Limestone, White

Storage

Store Tremflex 834 in original, undamaged packaging in a clean, dry, protected location with temperatures between 40 to 110 ˚F (5 to 43 ˚C).

Limitations

- Do not apply Tremflex 834 to damp or contaminated surfaces.
- Always utilize the sealant's MSDS found on our website at www.tremcosealants.com for information on proper ventilation, Personal Protective Equipment (PPE) and other health concerns.
- Keep product from freezing.
- Although Tremflex 834 is paintable, this does not imply adhesion to and compatibility with all paints. Please refer to Tremco Technical Bulletin No. S-09-05 for more information.

Substrate Preparation

Surfaces must be sound, clean, and dry. All release agents, existing waterproofing, dust, loose mortar, laitance, paints, or other finishes must be removed. This can be accomplished with a thorough wire brushing, grinding, sandblasting, or solvent washing, depending on the contamination.

Tremco recommends that surface temperatures be 40 °F (5 °C) or above at the time the sealant is applied. If sealant must be applied in temperatures below 40 °F, please refer to the Tremco Guide for Applying Sealants in Cold Weather that can be found on our website at www.tremcosealants.com.

Applicable Standards

- Tremflex 834 meets or exceeds the requirements of the following specifications:
- ASTM C834, Type OP, Grade -18 °C
- CAN/CGSB 19-GP-17M

Application

Apply Tremflex 834 with conventional caulking equipment filling the joint from the bottom first.

Immediately tool the sealant with a spatula to ensure intimate contact with the joint walls. Dry tooling is preferred, although water can be used in limited amounts to slick the spatula if needed.

For window and door perimeter fillet bead applications, a 1/4" (6 mm) minimum surface area is recommended.

Priming

Tremflex 834 adheres to common construction substrates without primers, however, Tremco always recommends that a mock-up or field adhesion test on the actual materials being used on the job be conducted to verify adhesion. The field adhesion test can be found in Appendix X1 of ASTM C1193, Standard Guide for Use of Joint Sealants.

Joint Design

Tremflex 834 may be used in any vertical or horizontal joint designed in accordance with accepted architectural/engineering practices. Joint width should be 4 times anticipated movement, but not less than 1/4" (6.4 mm).

Joint Backing

Closed cell or reticulated polyethylene backer rod is recommended as joint backing to control sealant depth and to ensure intimate contact of sealant with joint walls when tooling. Where depth of joint will prevent the use of backer rod, an adhesive backed polyethylene tape (bond breaker tape) should be used to prevent three-sided adhesion. All backing should be dry at time of sealant application.

Sealant Dimensions

W = Sealant width, D = Sealant depth, C = Contact area.

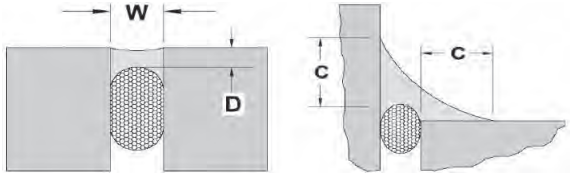

Expansion Joints- The minimum width and depth of any sealant application should be 1/4" x 1/4" (6 mm x 6 mm).

The depth (D) of sealant may be equal to the width (W) of joints that are less than 1/2" wide. For joints ranging from 1/2" to 1" (13 mm to 25 mm) wide, the sealant should be approximately one-half of the joint width.

The maximum depth (D) of any sealant should be 1/2" (13 mm). For joints that are wider than 1" (25 mm), contact Tremco Technical Services or your local Tremco Sales Representative.

Window Perimeter- For fillet beads, or angle beads around windows and doors, the sealant should exhibit a minimum surface contact area [C] of 1/4" (6 mm) onto each substrate, with provisions for release at the heel of the angle using backer rod or bond breaker tape.

Cure Time

At 72 °F (22 °C), 50% RH, Tremflex 834 is tack free in 15 min and dries at a rate of about 1/8" (3 mm) per day but can be painted after only 30 to 45 min with latexes, or oil-based paint. As the temperatures decrease, the dry time of Tremflex 834 will increase. A good rule of thumb is one additional day for every 10 °F (5.5 °C) decrease in temperature.

Clean Up

Excess sealant and smears along the joint interface can be cleaned up or removed with soapy water before the sealant skins. Any utensils used for tooling can also be cleaned with soapy water.

Warranty

Tremco warrants its Products to be free of defects in materials but makes no warranty as to appearance or color. Since methods of application and on-site conditions are beyond our control and can affect performance, Tremco makes no other warranty, expressed or implied including warranties of MERCHANTABILITY and FITNESS FOR A PARTICULAR PURPOSE, with respect to Tremco Products. Tremco's sole obligation shall be, at its option, to replace, or refund the purchase price of the quantity of Tremco Products proven to be defective and Tremco shall not be liable for any loss or damage.

Please refer to our website at www.tremcosealants.com for the most up-to-date Product Data Sheets.

NOTE: All Tremco Safety Data Sheets (SDS) are in alignment with the Globally Harmonized System of Classification and Labelling of Chemicals (GHS) requirements.

TYPICAL PHYSICAL PROPERTIES

PROPERTY	TEST METHOD	TYPICAL VALUES
Type		Single-component Siliconized Acrylic Latex sealant
Color		Clear, Limestone, White
Solids		84%
Specific Gravity		1.58
Application		gun-grade sealant, applied with typical caulking equipment
Extrudability	ASTM C1183	6 g/s
Artificial Weathering	ASTM C732	Pass
Wash-out	ASTM C732	None
Slump	ASTM C732	None
Cracking	ASTM C732	None
Discoloration	ASTM C732	None
Adhesion Loss	ASTM C732	None
Volume Shrinkage	ASTM C1241	22.4% (Type OP) 35.3% (Type C)
Low Temp. Flexibility	ASTM C734	No cracks, no adhesion loss
Extension - Recovery	ASTM C736	93.7%
Extension - Adhesion	ASTM C736	None
Slump	ASTM D2202	2 mm
Stain Index	ASTM D2203	0 mm
Tack-Free Time	ASTM C679	3 hr, 55 min
Movement Capability		±12.5%
Flame Spread	ASTM E84	10
Smoke Development	ASTM E84	0

Tremco Commercial Sealants & Waterproofing

3735 Green Rd
Beachwood OH 44122
216.292.5000 / 800.321.7906

1451 Jacobson Ave
Ashland OH 44805
419.289.2050 / 800.321.6357

220 Wicksteed Ave
Toronto ON M4H1G7
416.421.3300 / 800.363.3213

1445 Rue de Coulomb
Boucherville QC J4B 7L8
514.521.9555

www.tremcosealants.com

07 92 00 as per vicwest color
exterior metal siding
- Royal blue
- white
- red
-orange
-gold
- translucide

MULCO

TECHNICAL DATA

PRODUCT CODE

«SUPRA EXPERT»

104 XX0

Technical data # 20070228

EXTERIOR MULTIPURPOSE THERMOPLASTIC SEALANT FOR PROFESSIONAL USERS

DESCRIPTION

Super-durable thermoplastic architectural one component sealing compound. Dries by solvent evaporation.

INTENDED USES

«SUPRA EXPERT» is formulated to seal outdoor joints between two perpendicular surfaces exposed to thermal movement around door and window frames and sidings.

Super adhesion on many surfaces such as: concrete, masonry, painted or stained woods, natural, painted or anodized aluminum, vinyl siding or windows, steel, metal, glass and fiberglass.

The performance of **«SUPRA EXPERT»,** its ease of use as well as its remarkable choice of colors make it the ideal choice for professionals in construction and renovation applications.

REMARKS:

→ Do not use in contact with surfaces such as asphalt or tar products (coatings, adhesives, etc.), insulation panels (polystyrene, etc.) which can be damaged by solvents.
→ Do not use on polyethylene, polypropylene, recycled plastic, Teflon® or other comparable materials;
→ Do not use on floor joint where abrasion will occur;
→ Does not withstand immersion (tanks);

ADVANTAGES

⇒ Professional quality with excellent life expectancy.
⇒ Free of air bubbles **(1)**.
⇒ Multipurpose use with a super adhesion on many construction materials, including glass.
⇒ Ease of application without normal need of primer.
⇒ Rapid skin formation on which dust will not adhere.
⇒ Can be applied on vertical, horizontal or overhanging surfaces without subsiding or sagging.
⇒ Does not contain silicone.
⇒ No staining of surrounding surfaces.
⇒ Remains flexible with a superior and permanent elasticity up to – 40°C (– 40°F).
⇒ Can be stretched out to 1400 % (ASTM D-412) without breaking.
⇒ Does not require painting, however it can be painted over 24 hours after application (latex paint).
⇒ Withstands weathering ultraviolet and exterior temperature changes.

(1) REMARKS: Due to the **Mulco's** expertise with the thermoplastic sealants, **«SUPRA EXPERT»** is manufactured, put in cartridges, stored and delivered to our customers in such a way that the paste is free of air bubbles and is extruded uniformly and constantly. However, it happens sometimes that absorbing or porous surfaces cause the appearance of bubbles in the joint of the sealant during its drying.

STORAGE AND APPLICATION TEMPERATURE

«SUPRA EXPERT» does not deteriorate below freezing point. Nevertheless, since its viscosity increases during the lowering of its temperature, it is recommended to store it in a dry place whose temperature is between 10°C (50°F) and 30°C (86°F). Thus, the sealed cartridges could be preserved for 3 years.

«SUPRA EXPERT» can be applied in winter as well as in summer. However, the product's temperature must be above 5°C (40°F) to be applied easily.

SURFACE PREPARATION

There must be a free space between the two materials to permit their dimensional variations. Once applied, the sealant caulks the aperture. It will get compressed or stretched out depending on the movement of the materials.

To determine the size of the joint, one must take into consideration the expansion or the contraction the materials will be subjected to with the temperature or humidity variations. It must also be noted that some materials have greater dimensional variations than others.

If possible, apply **«SUPRA EXPERT»** whenever the size of the aperture between the materials is in-between.

When the joint covers an aperture of 6 mm (1/4 in.) or larger, the joint must be sustained by a backing rod in polyethylene. The diameter of the backing rod must be approximately 3 mm (1/8 in.) wider than the width of the joint to permit compression.

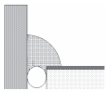

New metal and solvent resistant oily surfaces must be washed with acetone and dried up. Scrape rusty metal with a metallic brush prior to cleaning.

MULCO guarantees the high quality of its products; they are conform to the description given in the technical data and on the labels, and appropriate to the use for which they were intended, accordingly to the written instructions given by the company. Nevertheless, since the manufacturer can not exert any control over the circumstances, the methods and conditions of use, this guarantee only covers the high quality of the MULCO products.

SURFACE PREPARATION (continued)

Surfaces sensitive to solvents such as vinyl or dirty plastic materials must be washed out with a soapy solution, then rinsed and dried up.

Concrete and masonry must be scraped with a metallic brush so as to get a sound, firm, clean, stainless surface.

If the application of **«SUPRA EXPERT»** is to be made at a temperature lower than 5°C (40°F), the surface must be at a temperature at least 3°C (5°F) higher than dew point. The surfaces must be free of frost or ice.

If an old sealant or putty is present, they must be taken off. The surface must be in a seemingly new, firm and clean state. It must also be free of creosote, oil, grease, wax, silicone or silicone based product or asphalt or bitumen based product (coating, adhesive and so on), rust, any loose or foreign material or any material soluble in solvents.

RECOMMENDED PRIMER

«SUPRA EXPERT» generally does not require priming on most building materials surfaces as: steel, galvanized steel, natural, painted or anodized aluminum, concrete (28 days old), fibreglass, masonry, painted or stained surfaces including wood, vinyl siding and windows and many common building materials.

DIRECTIONS FOR USE

Cut the nozzle of the cartridge at right angle (90°), a little narrower than the width of the desired joint. Pierce the aluminum patch sealing the cartridge inside the nozzle.

Use a caulking gun and apply with a uniform and adequate pressure so as to give the joint a convex form. **«SUPRA EXPERT»** must not be smoothed or formed. That will provoke tensions in the product during drying time. During the extrusion of **«SUPRA EXPERT»**, the angle between the gun and the joint to be made must be approximately 45°. Pull the tip of the gun away form the joint, as illustrated.

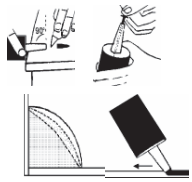

Make sure the sealant comes into contact with each of the surfaces on a width at least 3 mm (1/8 in.).

Example of minimal required widths for «SUPRA EXPERT» joints with various exterior materials per 10 feet lengths:

Steel, aluminum, concrete and painted or stained wood:	1/4 in.	(6 mm)
Brick or masonry:	1/4 in.	(6 mm)
Vinyl (PVC):	1/2 in.	(12 mm)

COVERAGE

Linear meters per cartridge:

Depth (mm)	6	8	10	12	14	16
Width (mm) 6	11	8	6,4	5,3	4,5	4
8	8	6	4,8	4	3,4	3
10	6,4	4,8	3,8	3,2	2,7	2,4
12	5,3	4	3,2	2,7	2,3	2

Linear feet per cartridge:

Depth (in).	1/4	3/8	1/2	5/8
Width (in.) 1/4	31	20,7	15,5	12,4
3/8	20,7	13,8	10,3	8,3
1/2	15,5	10,3	7,7	6,2
5/8	12,4	8,3	6,2	5

PHYSICAL PROPERTIES

GENERAL APPEARANCE:	Homogeneous paste, free of lumps and easy to extrude.
COLORS:	Consult our color chart.
COMPOSITION:	Thermoplastic rubber, synthetic resins (binder), titanium dioxide (clear excepted), color pigments (clear excepted), no inert charge (pigment), promoter of adhesion (agents), solvents (volatile material) and other additives.
WHIMS CLASSIFICATION:	B4 D2A; product for industrial use only, non-professional customer must use FLEXTRA or FLEX 9000.
CLEANING AGENT (before drying)**:**	Use mineral spirits.
CLEANING AGENT (dried product)**:**	Use a putty knife and mineral spirits or other effective solvent (too strong solvent may damaged other surfaces).
CLEANING AGENT (skin contact)**:**	Wash immediately with mineral oil and then wash carefully with soap and water.
CLEANER (dry product surface):	If surface seems to have yellowed, greyed or faded, a contaminant may have deposited on the product surface. Use a cleaner for vinyl surface containing Sodium Tripolyphosphate (STPP) or other heavy water base cleaner.
FLAMMABILITY:	At application: ..... flammable; Dry: ..... combustible.
FREEZE THAW STABILITY:	«SUPRA EXPERT» will not be damaged by the frost.
VISCOSITY:	1 000 000 CPS.
APPLICATION METHOD:	Manual or pneumatic caulking gun.

PHYSICAL PROPERTIES (continued)

APPLICATION SURFACE:	Vertical or horizontal joints.	
APPLICATION SITE:	Exterior joints.	
EASE OF APPLICATION:	CAN/CGSB-19.0-M77 method 3.1:	400 g/min. (easy).
VERTICAL JOINT SAGGING:	CAN/CGSB-19.0-M method 7.1:	less than 5 mm.
DENSITY:	0.98 kg/litre.	
MINIMUM APPLICATION TEMPERATURE:	Surface: Product:	- 30°C (-22°F); 5°C (40°F).
MAXIMUM APPLICATION TEMPERATURE:	Surface: Product:	40°C (100°F); 30°C (86°F).
DIMENSION:	Minimum: Maximum:	6 mm (1/4 in.); 16 mm (5/8 in.).
BLEEDING OF SEALING COMPOUNDS:	CAN/CGSB-19.0-M method 9.2:	pass (does not bleed).
STANDARDS:	Though no standard presently exists for thermoplastic rubber-based sealants, «SUPRA EXPERT» surpasses the elasticity and adhesion traction criteria after cyclical treatment of the latest edition of the repealed CGSB standards: 19-GP-5M (acrylic and solvent). 19-GP-14M (butyl); CAN/ONGC-19.13-M87 (category 25) (silicone, polyurethane, polysulfide, 1 part); CAN/ONGC-19.17-M90 (acrylic latex); CAN/ONGC-19.24-M90 (silicone, polyurethane, polysulfide 2 parts).	
SERVICE TEMPERATURE:	Minimum: Maximum:	-40°C (-40°F); 50°C (122°F).
HARDNESS (shore A)**:**	CAN/CGSB-19.0-M77 method 8.2:	40.
ELONGATION BEFORE RUPTURING:	ASTM D-412:	1400 %.
LOW TEMPERATURE FLEXIBILITY:	CAN/CGSB-19.0-M77 method 14.6	pass -30°C (-22°F).
TENSION STRENGTH:	ASTM D-412	3 M Pa. (435 psi.).
ADHESION PEEL STRENGTH: CAN/CGSB-19.0-M77 method 14.6	Aluminum Glass Concrete:	8,1 KN/m; 7.4 KN/m; 7.9 KN/m.
UV RESISTANCE:	ASTM C-793	excellent.

RESTRICTIONS

Does not adhere to polyethylene, polypropylene, recycled plastic, Teflon™ or other comparable materials;
Make sure the joint variation does not exceed the **«SUPRA EXPERT»** elasticity.
When «SUPRA EXPERT» is painted, the paint may crack if «SUPRA EXPERT» supports a movement higher than the paint elasticity.
The drying time of **«SUPRA EXPERT»** depends on temperature, relative humidity and ventilation.
The shelf life is diminished by warehousing over 25°C (77°F).
Not for joints submerged in water for prolonged periods of time.
Adhesion on material not specifically mentioned cannot be guaranteed. It is up to the customer to make his own performance tests or to consult our technical department.

SAFETY MEASURES

KEEP OUT OF THE REACH OF CHILDREN.
Before using «SUPRA EXPERT», consult the product material safety data sheet (MSDS).
Avoid using in areas where the solvents evaporating from **«SUPRA EXPERT»** could affect food or inside residences where sensitive people are present.
If the product is used indoors (factory), the area must be ventilated to the outdoors during application and drying time of **«SUPRA EXPERT»**.
«SUPRA EXPERT» contains flammable solvents. Do not smoke when using the product. Work in good ventilation conditions. Suppress all flash sources, flames or intense heat at the working place and near it.
Disposal: consult your municipality to dispose in conformity with regulations.

07 92 00 for metal siding
as per manufacturer recommandation

TremPro® JS-773

Non-Skinning, Non-Drying, Flexible, Synthetic Butyl Sealant

Product Description

TremPro JS-773 is a high solids, non-skinning, non-drying, synthetic, butyl elastomer sealant.

Basic Uses

It is designed for field caulking of panel joints and can be used for in-plant applications. TremPro JS-773 is also ideal for buttering or bedding non-porous components that are squeezed together by fastening or for field caulking of the interior panel joints of PEMB panels. It can be used to separate dissimilar metals to prevent galvanic action.

The product exhibits excellent adhesion to a variety of metals and metal finishes including hot-dip galvanized steel, Galvalume®, Kynar 500®, stainless steel, polyvinylidene fluoride (PVDF), aluminum, and fiberglass.

Color

Off-White

Packaging

10.1 fl.oz. cartridges, Quart (850 ml) cartridge, 20 oz. (600 ml) sausages, 5 gallon pails and 52 gallon drums.

INSTALLATION
Surface Preparation

For good adhesion, the joint surface must be sound, clean and dry.

Tooling & Cleaning

Tooling is recommended immediately after application to insure firm, intimate contact with the joint interface. Dry tooling is preferred. Excess sealant and smears adjacent to the joint can be removed with mineral spirits or a similar solvent.

Application

TremPro JS-773 is easily applied with conventional caulking equipment. Pails and drums can be applied with standard pumps. Tremco recommends a minimum 20:1 ratio pump. TremPro JS-773 will adhere to substrate and mating surfaces in temperatures ranging from -5°F (-20°C) to 120°F (49°C). Product should be stored at room temperature to ensure optimal product performance.

After application is complete, assemble components within 24 hours to prevent tracking and dirt pick-up that may inhibit adhesion. For extended storage conditions recommendation, please consult Tremco Technical Services at 1-866-209-2404. Extended exposure under elevated temperatures may alter the non-skinning and non-drying characteristics of the sealant.

Maintenance

Damaged Sealant can be repaired. Consult Tremco Technical Services or a Sales Representative for repair procedures.

Limitations

Not recommended for use on exposed applications.

Warranty

Tremco warrants its sealants to be free of defects in materials, but makes no warranty as to appearance or color. Since methods of application and on-site conditions are beyond our control and can affect performance, Tremco makes no other warranty, expressed or implied including warranties of MERCHANTABILITY and FITNESS FOR A PARTICULAR PURPOSE, with respect to Tremco sealants. Tremco's sole obligation shall be, at its option, to replace, or refund the purchase of the quantity of Tremco sealant proven to be defective and Tremco shall not be liable for any loss or damage.

Please refer to our website at www.tremcosealants.com for the most up-to-date Product Data Sheets.

TYPICAL PHYSICAL PROPERTIES

Specific Gravity	1.52
Percent Solids	90 to 92%
Service Temperature	-65°F (-54°C) to 200°F (93°C)
Application Temperature	-5°F (-20°C) to 120°F (49°C)

Tremco Commercial Sealants & Waterproofing
3735 Green Road, Beachwood, OH 44122 // Phone: 216.292.5000 // 800.321.7906
220 Wicksteed Avenue, Toronto, ON M4H 1G7 // Phone: 416.421.3300 // 800.363.3213
1451 Jacobson Avenue, Ashland OH 44805 // Phone: 419.289.2050 // 800.321.6357

SUBMITTALS IDENTIFICATION SHEET

PROJECT: Wastewater Treatment Plant Upgrade
Iqaluit, Nunavut

NUNAMI
STANTEC LIMITED
1088C Noble House
Iqaluit NU
www.stantec.com

CONTRACTOR: Kudlik Construction Ltd, Project 2018-062

Telephone: 867-979-1166

E-mail: srousseau@kudlik.biz

SUBCONTRACTOR:

Person responsible:

Telephone: () E-mail:

PRODUCT SUBMITTED:

☐ As Specified

☐ Alternate

SUPPLIER or MANUFACTURER: Hilti

Person responsible: André Langlois

Telephone: 418-953-1754 E-mail: landre.langlois@hilti.com

DESCRIPTION OF SUBMITTAL: anchorage

# of pages:

Reference to drawings:

Reference to specs:

Division: 07 Section: 07 84 00

REMARKS:

REVIEW AND COMMENTS (for use by Consultants):

STANTEC PROJECT #: 110126045 SUBMITTAL # SU-021

This review by Stantec is for general conformance with the design concept of Stantec's design of the:

☑ Architectural ☐ Electrical
☐ Structural ☐ Other
☐ Mechanical

component(s) only and does not mean that Stantec has verified or approves the shop drawing(s). The Contractor remains solely responsible for the shop drawing(s) and this review by Stantec does not relieve the Contractor of the Contractor's responsibility for errors or omissions in the shop drawing(s) or for meeting all requirements of the contract documents. This review does not mean that Stantec approves the detailed design inherent in the shop drawing, responsibility for which shall remain with the Contractor submitting same, nor does this review mean that Stantec accepts any deviation of the shop drawing(s) from the contract documents. The Contractor is responsible for confirming all dimensions and correlating them at the job site, for all construction means, methods and techniques, and for coordination of construction work of all trades, including coordination of all shop drawings.

Stantec

☑ REVIEWED

☐ REVIEWED, AS NOTED

☐ REVISE AND RESUBMIT

☐ NOT REVIEWED

DATE 2018-06-29

BY Jason King

Review of this submission is for compliance with general intent of the contract. This review does not relieve the Sub-Contractor, Supplier or Manufacturer of responsibility for error or omissions in the submission or the responsibility of meeting all requirements of the contract documents. Any deviation from the contract documents initiated by the Sub-Contractor, Supplier or Manufacturer shall be at their sole risk. QUANTITIES AND DETAIL DIMENSIONS ARE THE SUB-CONTRACTORS OR SUPPLIERS RESPONSIBILITY. VERIFY DATA WITH FIELD DIMENSIONS.

SUBMITTAL TRACKING No.: **SU-021**

2018-06-28

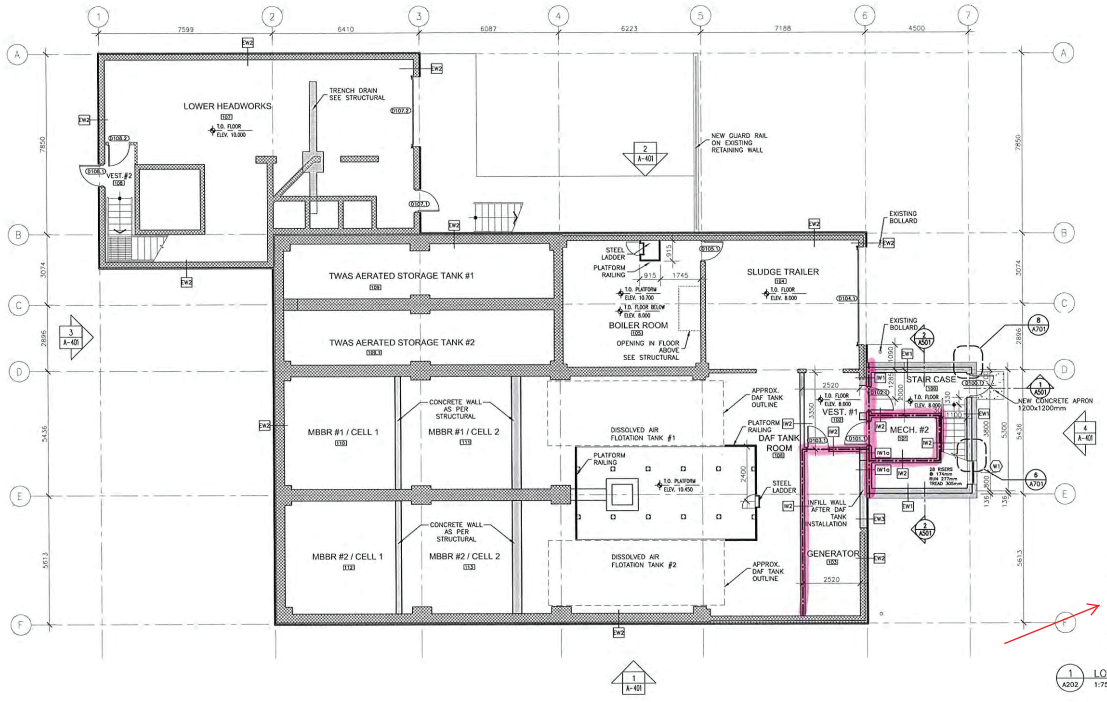

Fire system for wall
with steel deck
- CFS-SP-WB + CP767
or CP777 depending sens of steel
deck with the wall
- all other architectural application
- fire sealant
-for electrical and mechanical
see in respective shop drawing
of each sub-contractor

Revision	By	Appd.	YY.MM.DD
ISSUED FOR CONSTRUCTION	TF	GP	18.05.23
0 ISSUED FOR BID	TF	GP	18.04.09
Issued	By	Appd.	YY.MM.DD

Consultants

Permit-Seal

NUNAMI
STANTEC LIMITED
1088C Noble House
Iqaluit NU
www.stantec.com

The Contractor shall verify and be responsible for all dimensions DO NOT scale the drawing - any errors or omissions shall be reported to Stantec without delay.
The Copyrights to all designs and drawings are the property of Stantec. Reproduction or use for any purpose other than that authorized by Stantec is forbidden.

Client/Project
Iqaluit
IQALUIT WASTEWATER TREATMENT PLANT UPGRADE
City of Iqaluit, Nunavut

File name: A202-LOWER FLOOR NEW | Dwn. | Chkd. | Dsgn. | YY.MM.DD

Title
ARCHITECTURAL
LOWER FLOOR PLAN
NEW CONSTRUCTION

Project No.	Scale
110126045	1:75
Drawing No.	Sheet / Revision
A202	3 of 12 / 0

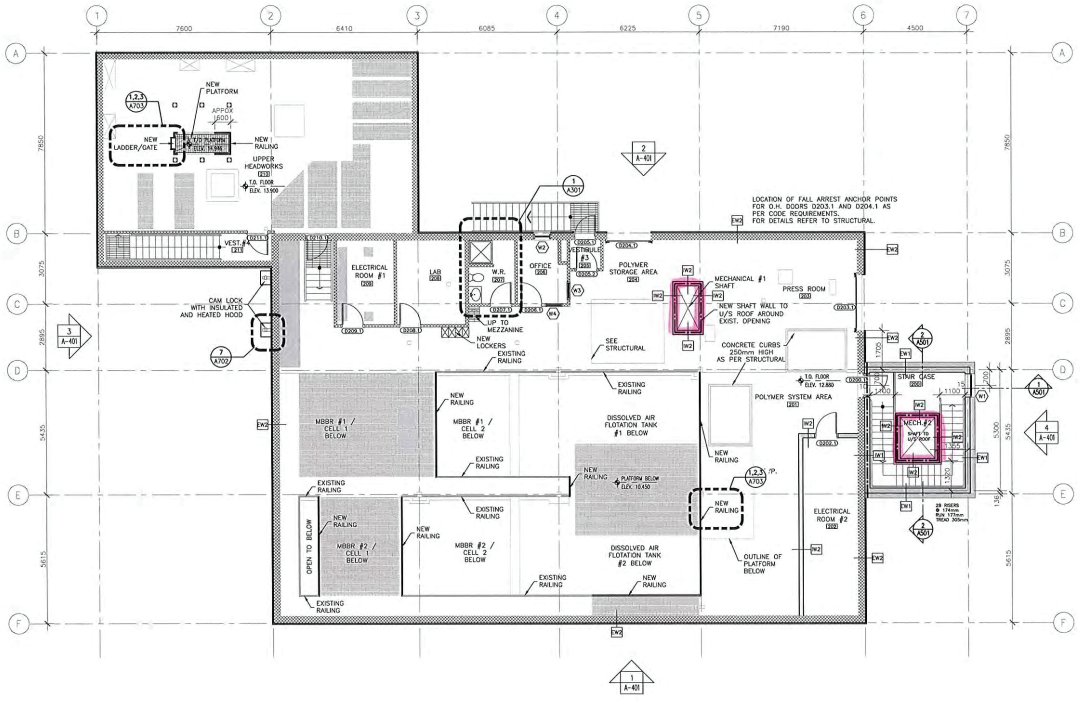

Revision	By	Appd	YY.MM.DD
ISSUED FOR CONSTRUCTION	TF	GP	18.05.23
0 ISSUED FOR BID	TF	GP	18.04.09
Issued	By	Appd	YY.MM.DD

ORIGINAL SHEET - ANSI A1

Consultants

Permit-Seal

Stamp: Stantec Architecture Ltd. PERMIT No. 008 Signature May 25, 2018 — #101126045

Stamp: APEGGA PERMIT TO PRACTICE STANTEC ENGINEERING LTD. Signature May 25, 2018 — #101126045

NUNAMI STANTEC LIMITED

10880 Noble House
Iqaluit NU
www.stantec.com

The Contractor shall verify and be responsible for all dimensions. DO NOT scale the drawing - any errors or omissions shall be reported to Stantec without delay.
The Copyright of the Drawings and Models are the property of Stantec. Reproduction or use for any purpose other than that authorized by Stantec is forbidden.

Client/Project

Iqaluit

IQALUIT WASTEWATER TREATMENT PLANT UPGRADE

City of Iqaluit, Nunavut

File Name: A204UPPER FLOOR NEW | Dsn: TF | Drn: CH/LB | Chkd: GP | Dgn: - | YY.MM.DD: 18.04.09

Title

ARCHITECTURAL
UPPER FLOOR PLAN
NEW CONSTRUCTION

Project No.	Scale
110126045	1:75
Drawing No.	Sheet
A204	5 of 12
	Revision 0

V:\1449\active\110126045\05_Cdn_Liaison\plotting\drawings\GD-architecture\current\A204-upper Floor New.dwg
Mar 23, 2018 - 2:29:16 PM - Brenda Hale

07 84 00 white

Flexible Firestop Sealant (CP 606)

Product description

- An acrylic based firestop sealant that provides movement capability in fire rated joints and seals through-penetrations applications

Product features

- Silicone free
- Halogen, asbestos and solvent free
- Paintable
- Tested up to 33% movement with 500 cycles in accordance to UL 2079 and ASTM 1966
- Smoke and fume resistant
- Easy clean up with water
- Single component systems available
- Meets LEED™ requirements for indoor environmental quality credit 4.1 Low Emitting Materials, Sealants and Adhesives and 4.2 Paints and Coatings

Areas of application

- Sealing construction/expansion joints
- Top-of-wall joints
- Metal pipes
- Cable bundles
- HVAC penetrations

For use with

- Various base materials such as masonry, concrete, gypsum, etc.
- Wall and floor assemblies rated up to 3 hours

Examples

- Where a gypsum wall assembly meets the underside of a metal or concrete deck
- Sealing expansion joints to impede the passage of fire, smoke and toxic fumes
- Sealing around HVAC penetrations through fire-rated assemblies

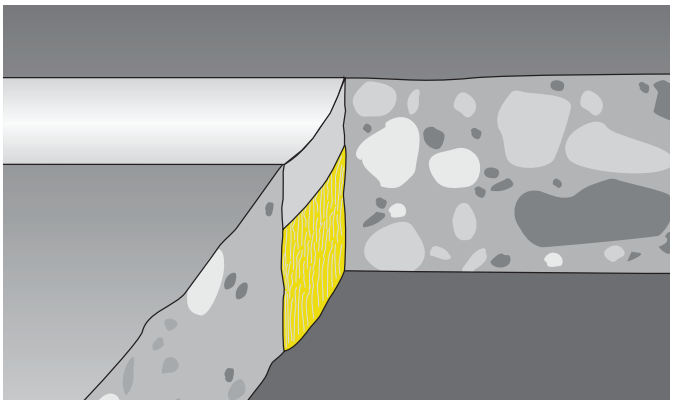

Technical Data*	CP 606
Chemical basis	Acrylic based firestop sealant
Color	Available in red, white and gray
Application temperature	40°F to 104°F (5°C to 40°C)
Skin-forming time	Approx. 15 min
Curing time	Approx. 3 mm / 3 days
Average volume shrinkage (ASTM C1241)	22.2%
Movement capability	Approx. 10%
Temperature resistance	–22°F to 176°F (–30°C to 80°C)
Surface burning characteristics (ASTM E 84-96)	Flame Spread: 10 Smoke Development: 0
Sound transmission classification (ASTM E 90-99)	56 (Relates to specific construction)
Tested in accordance with	• UL 2079 • ASTM E 814 • ASTM E 1966 • CAN/ULC-S115 • ASTM E 84 • UL 1479 • ASTM G21 • CAN/ULC-S102

*At 73°F (23°C) and 50% relative humidity

CLASSIFIED C UL US
FILL, VOID OR CAVITY MATERIAL
FOR USE IN THROUGH-PENETRATION
FIRESTOP SYSTEMS AND
JOINT SYSTEMS
SEE UL FIRE RESISTANCE DIRECTORY
66Y7

FM APPROVED

Installation instructions for CP 606

Notice

- Before handling, read Material Safety Data Sheet and product label for safe usage and health information.
- Instructions below are general guidelines — always refer to the applicable drawing in the UL Fire Resistance Directory or Hilti Firestop Systems Guide for complete installation information
- The use of backing material is recommended to control the sealant depth and help ensure assembly seal is complete

Opening

1. Clean the opening. Surfaces to which CP 606 will be applied should be cleaned of loose debris, dirt, oil, wax and grease. The surface should be moisture and frost free.

Application of firestop

2. Insert fill of mineral wool or backer (as required).
3. Apply firestop over backer.
4. Smooth firestop sealant with a trowel before the skin forms. Once cured, CP 606 can only be removed mechanically.
5. For maintenance reasons, a penetration seal can be permanently marked with an identification plate and fastened in a visible position next to the seal.

Not for use

- On areas immersed in water

Storage

- Store only in the original packaging in a location protected from moisture at a temperature of 40°F to 77°F (5°C to 25°C)
- Observe expiration date on package

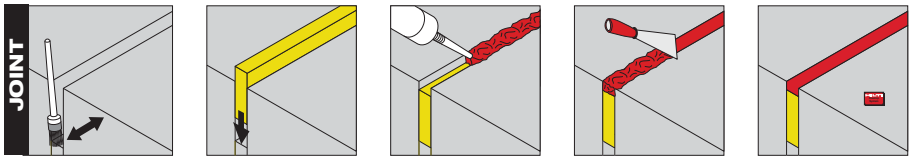

1. Clean opening | 2. Insert backing material compressed per UL System | 3. Apply CP 606 | 4. Smooth CP 606 | 5. Fasten identification plate (if required)

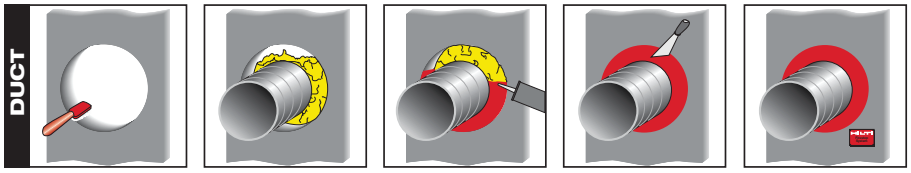

1. Clean opening | 2. Insert backing material | 3. Apply CP 606 | 4. Smooth CP 606 | 5. Fasten identification plate (if required)

Hilti Firestop
Saving lives
through innovation
and education

Hilti. Outperform. Outlast.

07 84 00 color white

Firestop Joint Spray (CFS-SP WB)

Product description

- A sprayable fire-rated mastic for construction joints where maximum movement is required

Product features

- Sprayable or apply by brush
- Maximum flexibility, meets 500 cycle requirements (Class II and III Approval) (ASTM E 1966 and UL 2079)
- Quick and easy installation with the Titan 600 or 1100 Sprayers can help save you time and money
- Contains no halogens, solvents or asbestos
- Water based formulation so spills and over-spray clean up quickly and easily
- Paintable
- Meets LEED™ requirements for indoor environmental quality credit 4.1 Low Emitting Materials, Sealants and Adhesives and 4.2 Paints and Coatings

Areas of application

- Top-of-wall joints
- Curtain wall/edge of slab
- Expansion joints

For use with

- Concrete, masonry and gypsum wall assemblies
- Wall and floor/wall assemblies rated up to 4 hours

Examples

- Where a gypsum wall assembly meets the underside of a metal or concrete deck
- Where a concrete floor assembly meets with non-rated exterior wall (concrete, glass, etc.)
- Where two concrete floor/wall assemblies meet

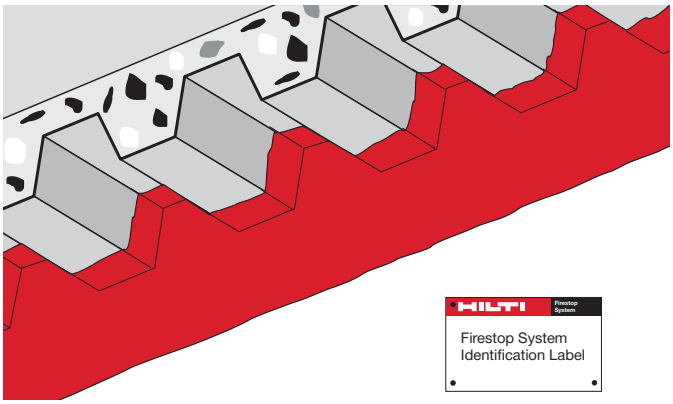

Technical Data*	CFS-SP WB
Density	Approx. 10.8 lb/gal (1.3 g/cm³)
Color	Available in red, white and gray**
Application temperature	39°F to 104°F (4°C to 40°C)
Temperature resistance	-40°F to 176°F (-40°C to 80°C)
Consistency	Sprayable liquid
Chemical basis	Acrylic-water-based-dispersion
Curing time	Approx. 24 hours @ 73°F, 50% humidity for 1/8" depth
Average volume shrinkage (ASTM C1241)	51.1%
Ph-value	Approx. 8-9
Movement capability	Up to 50%
Surface burning characteristics (CAN/ULC-S102)	Flame spread: 15 Smoke development: 10
Sound transmission classification (ASTM E 90-99)	59 (per tested construction type)

Tested in accordance with

- UL 2079
- ASTM E 1966
- ASTM E 84
- ASTM E 2837
- UL 1479
- ASTM E 814
- ASTM E 2307
- CAN/ULC-S115
- CAN/ULC-S102

*At 73°F (23°C) and 50% relative humidity
**Gray color requires six (6) weeks lead time

CLASSIFIED C UL US
FILL, VOID OR CAVITY MATERIAL
FOR USE IN THROUGH-PENETRATION
FIRESTOP SYSTEMS, AND/OR JOINT
SYSTEMS, AND/OR PERIMETER
FIRE CONTAINMENT SYSTEMS
SEE UL FIRE RESISTANCE DIRECTORY
66Y7

FM APPROVED

Installation instructions for Firestop Joint Spray CFS-SP WB

Notice

- Before handling, read Material Safety Data Sheet and product label for safe usage and health information.
- Instructions below are general guidelines — always refer to the applicable drawing in the UL Fire Resistance Directory or Hilti Firestop Systems Guide for complete installation information

Opening

1. Clean the opening. Surfaces to which Firestop Joint Spray will be applied should be cleaned of loose debris, dirt, oil, wax and grease. The surface should be moisture and frost free.

Application of Firestop Joint Spray

2. Mineral wool packing: Install the prescribed back filling material type and depth to obtain desired rating.
3. Application of Firestop Joint Spray: Apply Firestop Joint Spray to the required depth in order to obtain the desired rating. Make sure Firestop Joint Spray contacts all surfaces and overlaps beyond all surrounding surfaces (Refer to UL System). Titan Sprayers have been successful in applying Firestop Joint Spray. Hilti recommends the use of the Titan 600 (for application temperatures above 50°F) or Firestop Joint Spray may also be brushed on with a paint brush. Contact Hilti Technical Support for more information.
4. Curing time: Allow approx. 24 hours for typical application thickness (@ 73°F / 23°C) 50% humidity for 1/8" depth for the Firestop Joint Spray to fully cure.
5. Identification: For maintenance reasons all Firestop Joint Spray applications can be permanently marked with an identification plate and fastened in a visible position next to the seal.

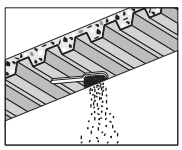
1. Clean opening

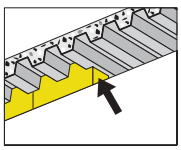
2. Pack in mineral wool compressed per UL System

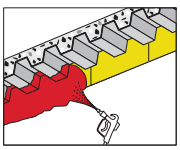
3. Spray or brush on Firestop Spray

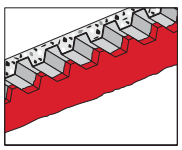
4. Allow Firestop Spray to cure

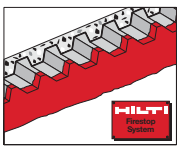
5. Fasten identification plate (if required)

Not for use

- In areas immersed in water
- On hot surfaces (above 176°F)

Storage

- Store only in the original packaging at temperatures 39°F to 77°F (4°C to 25°C)
- Observe expiration date on package

Hilti. Outperform. Outlast.

Speed Strips (CP 767) Speed Plugs (CP 777)

Product description

- CP 777: Pre-formed mineral wool plugs for 1.5", 2" and 3" decks
- CP 767: Pre-formed mineral wool strips suitable for joint applications

Product features

- Pre-cut to industry standard size decking flutes
- Reduces material waste
- 3 sizes available
- Pre-cut — leaves no gaps or voids
- Smooth surface provides cost effective spray coverage
- Safe to use — no asbestos/inorganic, will not mildew
- Up to 60% faster than castle cutting!

Areas of application

- Top-of-wall

Tested and approved

- UL Classified when used in conjunction with CP 606 Flexible Firestop Sealant, CP 601S Elastomeric Firestop Sealant, CP 672 Speed Spray, or CFS-SP WB Firestop Joint Spray

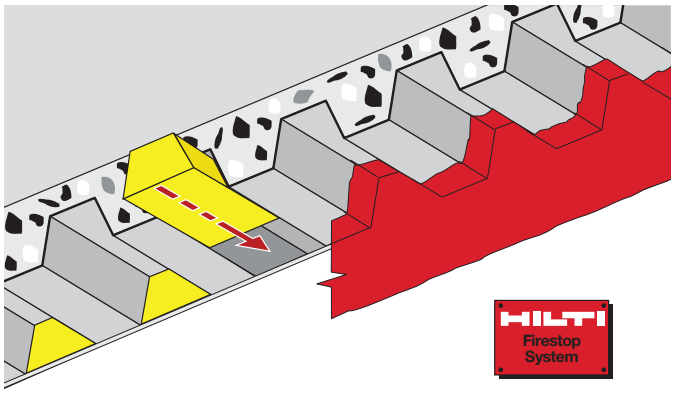

Technical Data	CP 767 and CP 777
Tested in accordance with	• UL 2079 • ASTM E 1966 • ASTM C G12 Type I-IUB • CAN/ULC-S115

CLASSIFIED C UL US
FORMING MATERIAL
FOR USE IN JOINT SYSTEMS
SEE UL FIRE RESISTANCE DIRECTORY
17RL

Saves time and money!



60% Faster than castle cutting

43% Faster than conventional mineral wool

*Based upon 40 linear feet of installation. Actual results may vary.

Installation instructions for CP 777

Notice

- Before handling, read Material Safety Data Sheet and product label for safe usage and health information.
- Instructions below are general guidelines — always refer to the applicable drawing in the UL Fire Resistance Directory or Hilti Firestop Systems Guide for complete installation information



Easy one step installation — simply cut to length and install.



Full coverage pre-cut flute configuration leaves no gaps or voids.



Superior finish smooth surface allows quick and cost effective coverage with Hilti CFS-SP WB Firestop Joint Spray.



Easy to utilize — Speed Strips in joints between wall substrate and bottom of deck. Compress per UL System.

Hilti Firestop
Saving lives through innovation and education

Hilti. Outperform. Outlast.

SUBMITTALS IDENTIFICATION SHEET

PROJECT: Wastewater Treatment Plant Upgrade
Iqaluit, Nunavut

NUNAMI
STANTEC LIMITED
1088C Noble House
Iqaluit NU
www.stantec.com

CONTRACTOR: Kudlik Construction Ltd, Project 2018-062

Telephone: 867-979-1166

E-mail: srousseau@kudlik.biz

SUBCONTRACTOR:

Person responsible:

Telephone: () E-mail:

PRODUCT SUBMITTED:

☐ As Specified

☐ Alternate

SUPPLIER or MANUFACTURER: Cometal

Person responsible: Nicolas Girard

Telephone: E-mail: Nicolas.girard@cometal.ca

DESCRIPTION OF SUBMITTAL: locker

# of pages:

Reference to drawings:

Reference to specs:

Division: 10 Section: 10 51 13

REMARKS:

please choose color

REVIEW AND COMMENTS (for use by Consultants):

STANTEC PROJECT #: 110126045

SUBMITTAL # SU 022

This review by Stantec is for general conformance with the design concept of Stantec's design of the:

☑ Architectural ☐ Electrical
☐ Structural ☐ Other
☐ Mechanical

component(s) only and does not mean that Stantec has verified or approves the shop drawing(s). The Contractor remains solely responsible for the shop drawing(s) and this review by Stantec does not relieve the Contractor of the Contractor's responsibility for errors or omissions in the shop drawing(s) or for meeting all requirements of the contract documents. This review does not mean that Stantec approves the detailed design inherent in the shop drawing, responsibility for which shall remain with the Contractor submitting same, nor does this review mean that Stantec accepts any deviation of the shop drawing(s) from the contract documents. The Contractor is responsible for confirming all dimensions and correlating them at the job site, for all construction means, methods and techniques, and for coordination of construction work of all trades, including coordination of all shop drawings.

Stantec

☐ REVIEWED

☑ REVIEWED, AS NOTED

☐ REVISE AND RESUBMIT

☐ NOT REVIEWED

DATE 2018-07-06

BY Jason King

Review of this submission is for compliance with general intent of the contract. This review does not relieve the Sub-Contractor, Supplier or Manufacturer of responsibility for error or omissions in the submission or the responsibility of meeting all requirements of the contract documents. Any deviation from the contract documents initiated by the Sub-Contractor, Supplier or Manufacturer shall be at their sole risk. QUANTITIES AND DETAIL DIMENSIONS ARE THE SUB-CONTRACTORS OR SUPPLIERS RESPONSIBILITY. VERIFY DATA WITH FIELD DIMENSIONS.

SUBMITTAL TRACKING No.: **SU-022**

2018-07-04

Global Partitions

PROJET:
PROJECT: WASTE WATER TREATMENT PLANT UPGRADE

DATE: 2018-06-28

CASIERS EN ACIER "traditionnal PLUS"
POWDER COATED METAL LOCKER "traditionnal PLUS"

SIMPLE 1 PORTE
SIMPLE TIER

RÉVISION



VUE DE CÔTÉ
side view

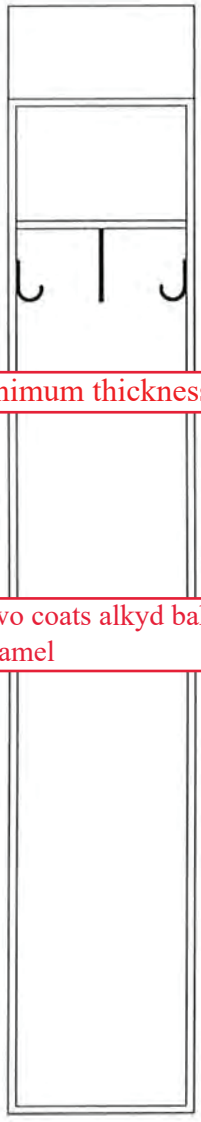

VUE DE L'INTERIEUR
interior view

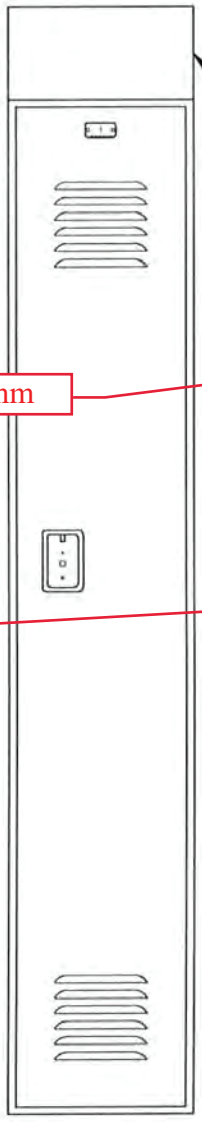

VUE DE FACE
Front view

WIDTH LARGEUR	DEPTH PROFONDEUR	HEIGHT HAUTEUR
305 mm 12"	457 mm 18"	1829 mm 72"

DESSUS INCLINÉ/
SLOPE TOP

ÉQUIPEMENT STANDARD/STANDARD EQUIPMENT

ÉQUIPEMENT INTÉRIEUR/ INTERIOR EQUIPMENT	3 CROCHETS AUX MURS ET 1 CROCHET DOUBLE AU PLAFOND/3 WALL HOOKS AND ONE CEILING HOOK
PENTURE/HINGE	PENTURE PIANO PLEINE HAUTEUR/FULL LENGHT 16 GAUGE CONTINUOUS PIANO HINGE TYPE RIVETED TO BOTH DOOR AND FRAME.
PLAQUE DE NUMÉROTATION/ NUMBER PLATE	EN ALUMINIUM POLI AVEC ÉCRITURE NOIRE DE ½" DE HAUTEUR/EACH LOCKER SHALL HAVE A POLISH ALUMINIUM NUMBER PLATE RIVETED TO DOOR FACE WITH BLACK NUMERALS ½"

PRODUIT/PRODUCT

MATÉRIAU/MATERIAL	ACIER / STEEL
FINI	PEINTURE EN POUDRE 2mm, CHOIX DE 15 COULEURS STANDARDS /2mm HYBRID EPOXY
DESSUS/TOP	CAL.24 / 24 GAUGE
DESSUS INCLINÉ CONTINU CONTINUOUS SLOPE TOP	CAL.18 / 18 GAUGE
CÔTÉS/SIDES	CAL.24 / 24 GAUGE
DERRIÈRE/BACK	CAL.24 / 24 GAUGE
PORTE/DOOR	CAL.14 /14 GAUGE
CONTOUR DE PORTE /DOOR FRAME	CAL.16 / 16 GAUGE
DESSOUS/BOTTOM	CAL.16 / 16 GAUGE
ASSEMBLAGE/ASSEMBLY	VIS ET RIVET / RIVETS
VENTILATION	CONTOUR DE LA PORTE/AERATION OPENING ON THE DOOR
GARANTIE/WARRANTY	1 AN / 1 YEAR
CADENAS/LOCK	PAR AUTRE / BY OTHER
BASE	N/A

Minimum thickness 1.89mm

Two coats alkyd baked enamel

NOTE

DISTRIBUTEUR DISTRIBUTOR	COMETAL	NOTE:	COULEUR COLOR: À DÉTERMINER ADVISE
ARCHITECTE ARCHITECT			MATÉRIAU MATÉRIAL: ACIER / STEEL
PO			
SO		DESSINÉ PAR/DRAWN BY: SG	

Metal Lockers Color Selection Guide

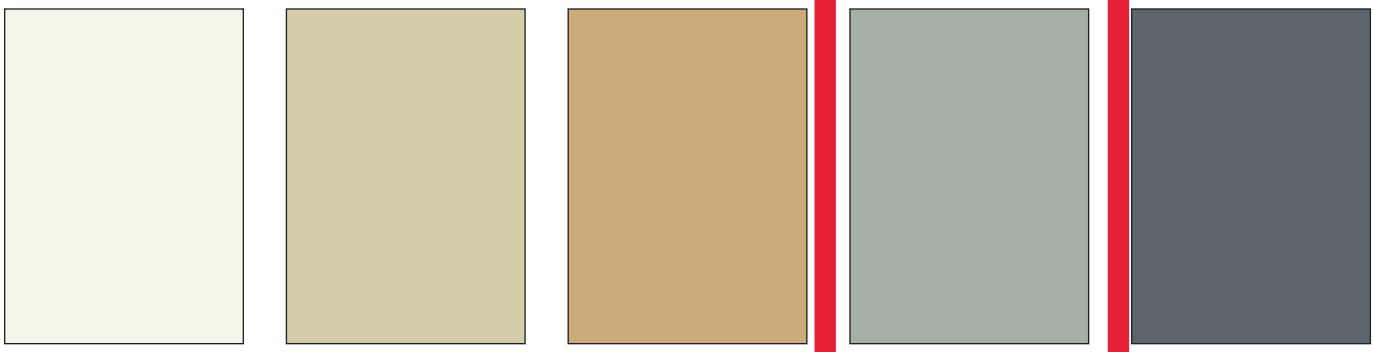

White #29* | Almond #03* | Tan #01 | Gray #25* | Charcoal #23*



Yellow #50 | Orange #05 | Red #45 | Burgundy #49 | Plum #04

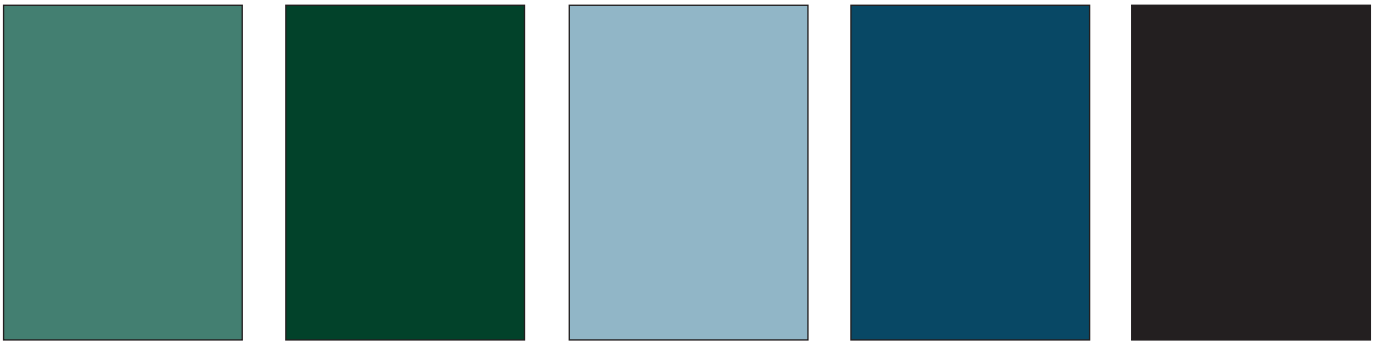

Mist Green #06 | Pine Forest #53 | Sky Blue #31 | Blue Frost #36* | Black #11*

***Denotes 48-Hour Quick Ship colors. Review 48-Hour Quick Ship Program information online.**

Doors and exposed body parts on Traditional and Traditional Plus Lockers shall be selected from ASI Storage Solutions' standard designer color range. Non-exposed body parts, e.g., shelves, shall be finished in Almond #03, with exception of Gray #25 that shall have Gray non-exposed body parts. Competitor Lockers shall have the same selected color throughout.

Actual colors may vary slightly from those shown due to limitations in the printing process.

ASI Storage Solutions
2171 Liberty Hill Road
Eastanollee, GA 30538
Tel: 706.827.2720 Fax: 706.827.2710
E-mail: info@asi-storage.com
Web: asi-storage.com

©2017 ASI Storage Solutions, an ASI Group Company

ASI106231017

Partitions · Accessories · Lockers

SUBMITTALS IDENTIFICATION SHEET

PROJECT: Wastewater Treatment Plant Upgrade
Iqaluit, Nunavut

NUNAMI
STANTEC LIMITED
1088C Noble House
Iqaluit NU
www.stantec.com

CONTRACTOR: Kudlik Construction Ltd, Project 2018-062

Telephone: 867-979-1166

E-mail: srousseau@kudlik.biz

SUBCONTRACTOR:

Person responsible:

Telephone: () E-mail:

PRODUCT SUBMITTED:

☐ As Specified

☐ Alternate

SUPPLIER or MANUFACTURER: centre de peinture Pierre Tanguay

Person responsible: Philippe Tanguay

Telephone: 418-228-7920 E-mail:p.tanguay@peinturepierretanguay.com

DESCRIPTION OF SUBMITTAL: paint

# of pages:

Reference to drawings:

Reference to specs:

Division: 09 Section: 09 92 00

REMARKS:

PT1 = DEER FEATHER (WHITE) CL1047
PT2 = ROYAL BLUE QC 56081
PT3 = SAFETY YELLOW SW4084
PT4 = (ROYAL BLUE (EXTERIOR) PT1 INTERIOR (DOOR COLOR)

REVIEW AND COMMENTS (for use by Consultants):

1. Fire retardant paint does not have a G7 finish

STANTEC PROJECT #: 110126045

This review by Stantec is for general conformance with the design concept of Stantec's design of the:

☑ Architectural ☐ Structural ☐ Mechanical ☐ Electrical ☐ Other

component(s) only and does not mean that Stantec has verified or approves the shop drawing(s). The Contractor remains solely responsible for the shop drawing(s) and this review by Stantec does not relieve the Contractor of the Contractor's responsibility for errors or omissions in the shop drawing(s) or for meeting all requirements of the contract documents. This review does not mean that Stantec approves the detailed design inherent in the shop drawing, responsibility for which shall remain with the Contractor submitting same, nor does this review mean that Stantec accepts any deviation of the shop drawing(s) from the contract documents. The Contractor is responsible for confirming all dimensions and correlating them at the job site, for all construction means, methods and techniques, and for coordination of construction work of all trades, including coordination of all shop drawings.

SUBMITTAL # SU-023

Stantec

☐ REVIEWED
☑ REVIEWED, AS NOTED
☐ REVISE AND RESUBMIT
☐ NOT REVIEWED

DATE 2018-07-10

BY Jason King

Review of this submission is for compliance with general intent of the contract. This review does not relieve the Sub-Contractor, Supplier or Manufacturer of responsibility for error or omissions in the submission or the responsibility of meeting all requirements of the contract documents. Any deviation from the contract documents initiated by the Sub-Contractor, Supplier or Manufacturer shall be at their sole risk. QUANTITIES AND DETAIL DIMENSIONS ARE THE SUB-CONTRACTORS OR SUPPLIERS RESPONSIBILITY. VERIFY DATA WITH FIELD DIMENSIONS.

SUBMITTAL TRACKING No.: **SU-023**

2018-06-28

cleaning the wall

Benjamin Moore

COROTECH HIGH PERFORMANCE

OIL & GREASE EMULSIFIER V600

Features

- Concentrated; must be mixed with water
- Biodegradable and phosphate-free
- Use on metal, fibreglass, vinyl, and masonry surfaces
- Rinses clean with no residue

General Description

Oil & Grease Emulsifier is designed for cleaning walls, floors and equipment. This cleaner is extremely effective in removing oil, grease, fats, blood and animal by-products. It may also be used for cleaning concrete, asphalt, vinyl, metal, plastic, fibreglass, etc.; it is also very effective for cleaning equipment, tools, brushes, rollers and spray equipment.

Recommended For

Corotech® Oil & Grease Emulsifier is designed for cleaning walls, floors and equipment. It may also be used for cleaning concrete, asphalt, vinyl, metal, plastic, fibreglass, etc.; it is also very effective for cleaning equipment, tools, brushes, rollers and spray equipment.

Limitations

Product Information

Colours — Standard:

N/A

— Tint Bases:

N/A

— Special Colours:

N/A

Certification:

The product supported by this data sheet is not regulated by coatings VOC rules.

This product is exempt under the Ozone Transport Commission regulations.

Does not apply to LEED (Leadership in Energy and Environmental Design) standards.

Suitable for use in USDA inspected facilities

Technical Assistance:

Available through your local authorized independent Benjamin Moore® retailer. For the location of the retailer nearest you, call 1-877-711-6830, or visit www.benjaminmoore.ca

Technical Data		N/A
Vehicle Type		N/A
Pigment Type		N/A
Volume Solids		N/A
Coverage per 3.79 L at Recommended Film Thickness		(Mixed) 9.3 sq. m. (100 sq. ft.)
Recommended Film Thickness	– Wet	N/A
	– Dry	N/A
Depending on surface texture and porosity. Be sure to estimate the right amount of paint for the job. This will ensure colour uniformity and minimize the disposal of excess paint.		
Dry Time @ 25 °C (77 °F) @ 50% RH	– Tack Free	N/A
	– To Recoat	N/A
High humidity and cool temperatures will result in longer dry, recoat and service times.		
Dries By		N/A
Viscosity		N/A
Flash Point		N/A
Gloss / Sheen		N/A
Surface Temperature at Application	– Min.	N/A
	– Max.	N/A
Thin With		Water
Clean Up Thinner		Clean Water
Weight Per 3.79 L		4.0 kg (8.9 lbs)
Storage Temperature	– Min.	4.4 °C (40 °F)
	– Max.	35 °C (95 °F)

Volatile Organic Compounds (VOC)

157 Grams/Litre

WARNING! If you scrape, sand, or remove old paint, you may release lead dust. **LEAD IS TOXIC. EXPOSURE TO LEAD DUST CAN CAUSE SERIOUS ILLNESS, SUCH AS BRAIN DAMAGE, ESPECIALLY IN CHILDREN. PREGNANT WOMEN SHOULD ALSO AVOID EXPOSURE**. Wear a NIOSH approved respirator to control lead exposure. Clean up carefully with a HEPA vacuum and a wet mop. Before you start, find out how to protect yourself and your family by logging onto Health Canada @ http://www.hc-sc.gc.ca/ewh-semt/contaminants/lead-plomb/asked_questions-questions_posees-eng.php

Application

Shake well before using.

Corotech® Oil & Grease Emulsifier should be mixed with water before use, 6 parts water to 1 part emulsifier for heavy cleaning requirements and 15 parts water to 1 part emulsifier for light cleaning. A mixed 3.79 L will clean approximately 9.3 square metres/100 square feet of area. Pour the water and emulsifier mixture onto the surface to be cleaned. Allow this solution to work for 15 to 30 minutes. Then scrub the surface with a stiff bristled brush. Rinse thoroughly with clean water or pick up residue with a wet/dry vacuum. Repeat the cleaning procedure if necessary.

Clean Up

Clean up with clean water.

Environmental Health & Safety Information

Not a dangerous substance or mixture according to the Globally Harmonized System (GHS)

Keep container closed when not in use. In case of spillage, absorb with inert material and dispose of in accordance with local regulations. Wash thoroughly after handling. Refer to Safety Data Sheet for additional health and safety information.

3.32% of the mixture consists of ingredient(s) of unknown toxicity

KEEP OUT OF REACH OF CHILDREN
PROTECT FROM FREEZING

Refer to Safety Data Sheet for additional health and safety information.

Benjamin Moore & Co., Ltd. 8775 Keele St., Concord, ON L4K 2N1 Tel: 877-711-6830 Fax: 888-248-2143 www.benjaminmoore.ca M72 V600 CAE 121416
©2016 Benjamin Moore & Co., Ltd. Benjamin Moore and the triangle “M” symbol are registered trademarks of Benjamin Moore & Co., Ltd.
All trademarks belong to their respective owners All rights reserved

09 91 00 galvicon touch-up

ORGANIC ZINC RICH PRIMER V170

Features

- High zinc content delivers cathodic protection
- Can be top coated or left uncoated
- Thermoplastic resin requires tie coat under certain finishes

General Description

Organic Zinc Rich Primer is a heavy-duty corrosion inhibitor for interior or exterior ferrous metal and weathered galvanized metal. It is made from an organic thermoplastic resin and leaves a finished film that is 83% zinc. Ideal for touching up existing galvanized metal with no topcoat.

Recommended For

Ferrous Metal & Weathered Galvanized. Corotech® Organic Zinc-Rich Primer is designed for the General Metal Finishing / Fabrication market, industrial maintenance market, the marine / offshore market.

Limitations

- Not for immersion service.
- Do not apply Corotech® Organic Zinc Rich Primer if air or surface temperatures are below 1 °C (35 °F) or above 32°C (90 °F), or in relative humidity greater than 90%, or if surface or air temperatures are within 5 degrees of the dew point.
- Do not apply over previous finishes.

Product Information

Colours — Standard:

Gray (79)

— Tint Bases:

N/A

Do not tint.

— Special Colours:

Contact your retailer.

Certification:

The product supported by this data sheet contains a maximum of 500 grams per litre VOC / VOS excluding water & exempt solvents.

This product is compliant as a Metallic Pigmented Coating.

This product is currently approved for use under MPI #18.

Cold Galvanizing Project Qualification

Meets Composition Requirements of TT-P-1046

Meets Performance Requirements of TT-P-641 & DOD-P-21035

Meets Performance Requirements of Mil-P-26915 Type I, Class A

Meets SSPC Paint #5 & SSPC Paint #20, Type II

Technical Assistance:

Available through your local authorized independent Benjamin Moore® retailer. For the location of the retailer nearest you, call 1-800-361-5898, or visit www.benjaminmoore.ca

Technical Data◊		Gray
Vehicle Type		Thermoplastic Rubber
Pigment Type		Zinc
Volume Solids		42.5 ± 1.0%
Coverage per 3.79 L at Recommended Film Thickness		27.9 – 37.2 sq. m. (300 - 400 sq. ft.)
Recommended Film Thickness	– Wet	4.0 - 5.5 mils
	– Dry	1.7 - 2.3 mils
Depending on surface texture and porosity.		
Dry Time @ 25 °C (77 °F) @ 50% RH	– Tack Free	30 Minutes
	– To Recoat	12 Hours
	– Full Cure	72 Hours
High humidity and cool temperatures will result in longer dry, recoat and service times.		
Dries By		Evaporation
Viscosity		100 – 115 KU
Flash Point		26.7 °C (80 °F) or greater (TT-P-141, Method 4293)
Gloss / Sheen		0 – 5 units @ 60°
Surface Temperature at Application	– Min.	1.8 °C (35 °F)
	– Max.	32 °C (90 °F)
Thin With		Do Not Thin
Clean Up Thinner		Corotech® V703 Xylene
Weight Per 3.79 L		9.2 kg (20.3 lbs)
Storage Temperature	– Min.	7.2 °C (45 °F)
	– Max.	35 °C (95 °F)

Volatile Organic Compounds (VOC)

500 Grams/Litre

◊ Reported values are for Gray. Contact retailer for values of other bases or colours.

Surface Preparation

The performance of this product is directly dependent upon the degree of surface preparation employed. All dirt, oils, accumulated salts, and other contaminants must be removed prior to employing specific surface preparation methods. Removal of all contaminants should be completed in accordance with SSPC-SP 1. Ferrous metal substrates should be free of all mill scale and rust. Aggregate blasting should be in accordance with SSPC-SP 10 Near White Blast for cleanliness. Conscientious power tool cleaning (SSPC-SP 3) may be employed; however, for best results, power tool cleaning to bare metal (SSPC-SP 11) is strongly suggested. Weathered Galvanized substrates should have all rust removed by aggregate blasting in accordance with SSPCSP 10 Near White Blast for cleanliness. Conscientious power tool cleaning (SSPC-SP 3) may be employed; however, for best results, power tool cleaning to bare metal (SSPC-SP 11) is strongly suggested.

It is not recommended that this coating be applied over previous finishes.

WARNING! If you scrape, sand, or remove old paint, you may release lead dust. LEAD IS TOXIC. EXPOSURE TO LEAD DUST CAN CAUSE SERIOUS ILLNESS, SUCH AS BRAIN DAMAGE, ESPECIALLY IN CHILDREN. PREGNANT WOMEN SHOULD ALSO AVOID EXPOSURE. Wear a NIOSH approved respirator to control lead exposure. Clean up carefully with a HEPA vacuum and a wet mop. Before you start, find out how to protect yourself and your family by logging onto Health Canada @ https://www.canada.ca/en/health-canada/services/environmental-workplace-health/environmental-contaminants/lead/lead-information-package-some-commonly-asked-questions-about-lead-human-health.html

Application

Mix the product thoroughly before application. The use of a drill mixer at low speed will best accomplish this task. Ensure that all zinc is mixed into solution with none remaining on the bottom of the can. Do not apply Corotech® Organic Zinc Rich Primer if air or surface temperatures are below 1 °C (35 °F) or above 32 °C (90 °F), or in relative humidity greater than 90%, or if surface or air temperatures are within 5 degrees of the dew point. Product should be allowed to dry tack free prior to air or surface temperatures being within 5 degrees of the dew point.

Airless Spray (Preferred Method): Tip range between .019 and .025. Total fluid output pressure at tip should not be less than 2100 psi.

Air Spray (Pressure Pot): Must have air agitator. Binks or equivalent equipment. (Gun: #18 or 62; Fluid Nozzle: #66; Air Nozzle: 66 PE).

NOTE: Do not allow material to remain in hoses, gun or spray equipment. Thoroughly flush all equipment with recommended thinner.

Brush: Natural Bristle (for small areas only).

TEST DATA	
Dry Heat Resistance	93 °C (200 °F)
Wet Heat Resistance	52 °C (125 °F)
Adhesion (ASTM D3359)	Pass 5B
Salt Fog Resistance (ASTM B117) One coat	500 Hours-Pass (Rating: 10 Rust Area: 0.00%)
CHEMICAL RESISTANCE GUIDE (NON-IMMERSION)	
Fresh Water	See Finish Coat Data Sheets for Resistance Information.
Salt Water	
Acids	
Alkalis	
Solvents	
Fuel	
Acidic Salt Solutions	
Alkaline Salt Solutions	
Neutral Salt Solutions	
SYSTEMS RECOMMENDATIONS	
COMPATIBLE FINISHES	
V300 Line, V330 Line, V341/V342 Line, V440 Line, V540 Line, and Other Acrylics	

Clean Up

Clean with Corotech® V703 Xylene.

Environmental Health & Safety Information

DANGER!

Causes skin irritation

Causes serious eye irritation

May cause cancer

Suspected of damaging fertility or the unborn child

May cause damage to organs through prolonged or repeated exposure

May be fatal if swallowed and enters airways

Flammable liquid and vapor

Prevention: Obtain special instructions before use. Do not handle until all safety precautions have been read and understood. Use personal protective equipment as required. Wash face, hands and any exposed skin thoroughly after handling. Wear eye /face protection. Do not breathe dust /fume /mist /vapors /spray. Keep away from heat /sparks /open flames /hot surfaces, no smoking. Keep container tightly closed. Ground /bond container and receiving equipment. Use explosion-proof electrical /ventilating /lighting /equipment. Use only non-sparking tools. Take precautionary measures against static discharge.

Response: If exposed or concerned get medical attention. If in eyes rinse cautiously with water for several minutes. Remove contact lenses, if present and easy to do. Continue rinsing. If eye irritation persists get medical attention. If skin irritation occurs get medical attention. If on skin (or hair) take off immediately all contaminated clothing. Rinse skin with water. Wash contaminated clothing before reuse. If swallowed immediately call a POISON CENTER or physician. Do NOT induce vomiting. In case of fire use CO2, dry chemical, or foam for extinction.

Storage: Store locked up. Store in a well-ventilated place. Keep cool.

Disposal: Dispose of contents /container to an approved waste disposal plant.

This document represents hazards of the product referenced above. Refer to the individual Safety Data Sheet for hazards of the specific product you will be using.

KEEP OUT OF REACH OF CHILDREN
PROTECT FROM FREEZING
FOR PROFESSIONAL USE ONLY

Refer to Safety Data Sheet for additional health and safety information.

Benjamin Moore & Co., Ltd. 8775 Keele St., Concord, ON L4K 2N1 Tel: 877-711-6830 Fax: 888-248-2143 www.benjaminmoore.ca M72 V170 CE 101317
©2016, 2017 Benjamin Moore & Co., Ltd. Benjamin Moore and the triangle "M" symbol are registered trademarks of Benjamin Moore & Co., Limited.
All other trademarks belong to their respective owners All rights reserved

Benjamin Moore®

ULTRA SPEC® 500
INTERIOR SEMI-GLOSS FINISH
K539

Features

- Zero VOC
- Low odour
- Excellent hiding
- Spatter resistant
- Decorative and uniform semi-gloss finish
- Quick dry
- Easy application
- Soap and water clean up
- MPI Approved
- Washable
- Qualifies for LEED® v4 credit

General Description

A professional-quality interior waterborne semi-gloss finish based on a proprietary acrylic resin that tints on the Gennex® zero VOC colorant system. This waterborne interior semi-gloss has excellent stain release so it washes clean easily. The product qualifies for LEED® v4 credit and passes the most stringent environmental standards in any colour. Because it tints on our Gennex® waterborne colorant system all Ultra Spec® 500 finishes are available in any colour without an increase in VOC.

Recommended For

Interior door, trim, cabinet, wall and ceiling surfaces in commercial and institutional environments where a washable semi-gloss finish is desired. For use on primed or previously painted drywall, plaster, wood, metal and wallpapered surfaces.

Limitations

- Do not apply when air and surface temperatures are below 10 °C (50 °F)

Product Information

Colours — Standard:
White (01)

— Tint Bases:
Benjamin Moore® Gennex® bases 1X, 2X, 3X & 4X

— Special Colours:
Contact your Benjamin Moore representative

Certifications & Qualifications:

VOC compliant in all regulated areas

Zero VOC

Class A (0-25) over non-combustible surfaces when tested in accordance with ASTM E-84

Master Painters Institute MPI # 43, 43 X-Green™, 146, 146 X-Green™
Master Painters Institute High Performance # 140, 140 X-Green™

Cradle to Cradle Certified™ Silver

Benjamin Moore's Green Promise® designation is our company's assurance that this product meets – and often exceeds – rigorous environmental and performance criteria regarding VOCs, emissions, application, washability, scrubbability and packaging, while also delivering the premium levels of performance you expect from Benjamin Moore.

Qualifies for LEED® v4 Credit	CDPH v1 Emission Certified	Qualifies for CHPS low emitting credit (Collaborative for High Performance Schools)	VOC (in any colour)
YES	YES	YES	0 g/L

This Benjamin Moore product has been tested by independent third parties and meets or exceeds the published chemical restriction and performance criteria of the **Green Seal™ GS-11 2015 standard**

Customer Information Centre:
1-800-361-5898, info@benjaminmoore.ca, www.benjaminmoore.ca

Technical Data◊		White
Vehicle Type		Acrylic Copolymer
Pigment Type		Titanium Dioxide
Volume Solids		41 ± 2%
Coverage per 3.79 L at Recommended Film Thickness		32.5 – 37.1 sq. m. (350 – 400 sq. ft.)
Recommended Film Thickness	– Wet	4.3 mils
	– Dry	1.8 mils
Depending on surface texture and porosity. Be sure to estimate the right amount of paint for the job. This will ensure colour uniformity and minimize the disposal of excess paint.		
Dry Time @ 25 °C (77 °F) @ 50% RH	– To Touch	2 Hours
	– To Recoat	4 Hours
Painted surfaces can be washed after two weeks. High humidity and cool temperatures will result in longer dry, recoat and service times.		
Dries By		Coalescence
Viscosity		93 ± 3 KU
Flash Point		N/A
Gloss / Sheen		Semi-Gloss (20 – 35 @ 60°)
Surface Temperature at Application	– Min.	10 °C (50 °F)
	– Max.	32.2 °C (90 °F)
Thin With		See Chart
Clean Up Thinner		Clean Water
Weight Per 3.79 L		5.1 kg (11.2 lbs)
Storage Temperature	– Min.	4.4 °C (40 °F)
	– Max.	32.2 °C (90 °F)

Volatile Organic Compounds (VOC)

0 g/L

Zero VOC post tint (any base and any colour)

◊Reported values are for White. Contact Benjamin Moore for values of other bases or colour.

Surface Preparation

Surfaces to be painted must be clean, dry, and free of dirt, dust, grease, oil, soap, wax, scaling paint, water-soluble materials, and mildew. Remove any peeling or scaling paint and sand these areas to feather edges smooth with adjacent surfaces. Glossy areas should be dulled. Drywall surfaces must be free of sanding dust.

New plaster or masonry surfaces must be allowed to cure 30 days before applying base coat. Cured plaster should be hard, have a slight sheen and maximum PH of 10; soft, porous or powdery plaster indicates improper cure. Never sand a plaster surface; knife off any protrusions and prime plaster before and after applying patching compound. Poured or pre-cast concrete with a very smooth surface should be etched or abraded to promote adhesion, after removing all form release agents and curing compounds. Remove any powder or loose particles before priming. Wood substrates must be thoroughly dry.

Difficult Substrates: Benjamin Moore offers a variety of specialty primers for use over difficult substrates such as bleeding woods, grease stains, crayon markings, hard glossy surfaces, galvanized metal or other substrates where paint adhesion or stain suppression is a particular problem. Your Benjamin Moore® retailer can recommend the right problem-solving primer for your special needs.

WARNING! If you scrape, sand, or remove old paint, you may release lead dust. LEAD IS TOXIC. EXPOSURE TO LEAD DUST CAN CAUSE SERIOUS ILLNESS, SUCH AS BRAIN DAMAGE, ESPECIALLY IN CHILDREN. PREGNANT WOMEN SHOULD ALSO AVOID EXPOSURE. Wear a NIOSH approved respirator to control lead exposure. Clean up carefully with a HEPA vacuum and a wet mop. Before you start, find out how to protect yourself and your family by logging onto Health Canada @ https://www.canada.ca/en/health-canada/services/environmental-workplace-health/environmental-contaminants/lead/lead-information-package-some-commonly-asked-questions-about-lead-human-health.html

Primer/Finish Systems

New surfaces should be fully primed, and previously painted surfaces may be primed or spot primed as necessary. For best hiding results, tint the primer to the approximate shade of the finish coat, especially when a significant colour change is desired. **Special Note**: Certain custom colours require a Deep Colour Base Primer tinted to a special prescription formula to achieve the desired colour. Consult your retailer.

Wood, and engineered wood products
Primer: Ultra Spec® 500 Interior Latex Primer (K534) or Fresh Start® All-Purpose Alkyd Primer (F024)
Finish: 1 or 2 coats Ultra Spec® 500 Interior Semi-Gloss Finish (K539)

Drywall
Primer: Ultra Spec® 500 Interior Latex Primer (K534) or Fresh Start® Multi-Purpose Latex Primer (F023)
Finish: 1 or 2 coats Ultra Spec® 500 Interior Semi-Gloss Finish (K539)

Plaster (Cured)
Primer: Ultra Spec® 500 Interior Latex Primer (K534) or Fresh Start® Multi-Purpose Latex Primer (F023)
Finish: 1 or 2 coats Ultra Spec® 500 Interior Semi-Gloss Finish (K539)

Rough or Pitted Masonry
Primer: Ultra Spec® Masonry Interior/Exterior Hi-Build Block Filler (K571)
Finish: 1 or 2 coats Ultra Spec® 500 Interior Semi-Gloss Finish (K539)

Smooth Poured or Precast Concrete
Primer: Ultra Spec® 500 Interior Latex Primer (K534) or Fresh Start® Multi-Purpose Latex Primer (F023)
Finish: 1 or 2 coats Ultra Spec® 500 Interior Semi-Gloss Finish (K539)

Ferrous Metal (Steel and Iron)
Primer: Ultra Spec® HP Acrylic Metal Primer (FP04) or Super Spec HP® Alkyd Metal Primer (KP06)
Finish: 1 or 2 coats Ultra Spec® 500 Interior Semi-Gloss Finish (K539)

Non-Ferrous Metal (Galvanized & Aluminum)

All new metal surfaces must be thoroughly cleaned with Corotech® Oil & Grease Emulsifier (V600) to remove contaminants. New shiny non-ferrous metal surfaces that will be subject to abrasion should be dulled with very fine sandpaper or a synthetic steel wool pad to promote adhesion.
Primer: Ultra Spec® HP Acrylic Metal Primer (FP04)
Finish: 1 or 2 coats Ultra Spec® 500 Interior Semi-Gloss Finish (K539)

Repaint, All Substrates: Prime bare areas with the primer recommended for the substrate above.

Application

Stir thoroughly before use. Apply one or two coats. For best results, use a Benjamin Moore® Professional custom-blended nylon/polyester brush, Benjamin Moore® Professional roller, or a similar product. This product can also be sprayed.

Conditioning with Benjamin Moore® K518 Extender may be necessary under certain conditions to adjust open time or spray characteristics. The chart below is for general guidance

	Mild conditions	**Severe conditions**
	Humid (RH> 50%) with no direct sunlight & with little to no wind	Dry (RH<50%), in direct sunlight, or windy conditions
Brush: Nylon / Polyester	No thinning necessary	Add **K518 Extender** or **water:** Max of 236 ml to a 3.79 L of paint **Never add other paints or solvents.**
Roller: Premium Quality 10 mm roller cover		
Spray: Airless Pressure: 1,500 -2,500 psi Tip: 0.013-0.017		

Thinning/Clean Up

Thinning is unnecessary, but if required to obtain desired application properties, a small amount of clean water may be added. Never add other paints or solvents.

Clean up: Use soap and water. Spray equipment should be given a final rinse with mineral spirits to prevent corrosion.

USE COMPLETELY OR DISPOSE OF PROPERLY. Dry empty containers may be recycled in a can recycling program. Local disposal requirements vary; consult your sanitation department or state-designated environmental agency on disposal options.

Environmental Health & Safety Information

May cause allergic skin reaction.

Do not get on skin or clothing.

Use only in a well ventilated area. Keep container closed when not in use. In case of spillage, absorb with inert material and dispose of in accordance with local regulations. Wash thoroughly after handling.

KEEP OUT OF REACH OF CHILDREN
PROTECT FROM FREEZING

Refer to Safety Data Sheet for additional health and safety information.

Benjamin Moore & Co., Ltd. 8775 Keele St., Concord, ON L4K 2N1 1-800-361-5898 www.benjaminmoore.ca M72 K539 CE 050418
Benjamin Moore, Fresh Start, Gennex, Green Promise, Super Spec HP, Ultra Spec and the triangle "M" symbol are registered trademarks of Benjamin Moore & Co., Ltd. Cradle to Cradle Certified is a certification mark licensed by the Cradle to Cradle Products Innovation Institute. This product is not endorsed by or a division of CHPS. This product is provided by Benjamin Moore, not CHPS. All other marks belong to their respective owners.
©2015, 2018 Benjamin Moore & Co., Ltd. All rights Reserved

Benjamin Moore®

ULTRA SPEC® 500
INTERIOR LATEX PRIMER
K534

Features

- Excellent hiding
- Spatter resistant
- Zero VOC
- Qualifies for LEED® v4 credit
- Quick dry
- Low odour
- Easy application
- Soap and water clean up
- MPI Approved

General Description

A professional-quality interior waterborne primer based on a proprietary acrylic resin. It qualifies for LEED® v4 credit and passes the most stringent environmental standards

Recommended For

Interior wall and ceiling surfaces in commercial and institutional environments. For new or previously painted interior wallboard, cured masonry, cured plaster and non-bleeding woods. Also can be used on primed or previously painted metal in addition to under wallcoverings for easy positioning and removal.

Limitations

- Do not apply when air and surface temperatures are below 10 °C (50 °F)

Product Information

Colours — Standard:

White (00)

White may be tinted with up to 2.0 fl. oz. of Benjamin Moore® Gennex® colorants per 3.79 L.

— Tint Bases:

NA

— Special Colours:

Contact your Benjamin Moore representative

Certifications & Qualifications:

VOC compliant in all regulated areas

Zero VOC

Class A (0-25) over non-combustible surfaces when tested in accordance with ASTM E-84

Master Painters Institute MPI # 50, 53 X-Green™, 149, 149 X-Green™

Water Vapor Transmission: ASTM D1653 (method A): 17.5 perms

Cradle to Cradle Certified™ Silver

Benjamin Moore's green promise®

Benjamin Moore's Green Promise® designation is our company's assurance that this product meets – and often exceeds – rigorous environmental and performance criteria regarding VOCs, emissions, application, washability, scrubbability and packaging, while also delivering the premium levels of performance you expect from Benjamin Moore.

Qualifies for LEED® v4 Credit	CDPH v1 Emission Certified	Qualifies for CHPS low emitting credit (Collaborative for High Performance Schools)	VOC (in any colour)
YES	YES	YES	0 g/L

This Benjamin Moore product has been tested by independent third parties and meets or exceeds the published chemical restriction and performance criteria of the **Green Seal™ GS-11 2015 standard**

Customer Information Centre:

1-800-361-5898, info@benjaminmoore.ca, www.benjaminmoore.ca.

Technical Data◊ — White

Vehicle Type		Acrylic Copolymer
Pigment Type		Titanium Dioxide
Volume Solids		30 ± 2%
Coverage per 3.79 L at Recommended Film Thickness		32.5 – 37.1 sq. m. (350 – 400 sq. ft.)
Recommended Film Thickness	– Wet	4.3 mils
	– Dry	1.8 mils
Depending on surface texture and porosity. Be sure to estimate the right amount of paint for the job. This will ensure colour uniformity and minimize the disposal of excess paint		
Dry Time @ 25 °C (77 °F) @ 50% RH	– To Touch	1 Hour
	– To Recoat	2-3 Hours
High humidity and cool temperatures will result in longer dry, recoat and service times		
Dries By		Coalescence
Viscosity		93 ± 3 KU
Flash Point		N/A
Gloss / Sheen		Flat (3 – 8 @ 85°)
Surface Temperature at Application	– Min.	10 °C (50 °F)
	– Max.	32.2 °C (90 °F)
Thin With		See Chart
Clean Up Thinner		Clean Water
Weight Per 3.79 L		5.28 kg (11.64 lbs)
Storage Temperature	– Min.	4.4 °C (40 °F)
	– Max.	32.2 °C (90 °F)

Volatile Organic Compounds (VOC)

0 g/L

Zero VOC post tint (any base and any colour)

◊Reported values are for White. Contact Benjamin Moore for values of other bases or colour.

Surface Preparation

Surfaces to be painted must be clean, dry, and free of dirt, dust, grease, oil, soap, wax, scaling paint, water-soluble materials, and mildew. Remove any peeling or scaling paint and sand these areas to feather edges smooth with adjacent surfaces. Glossy areas should be dulled. Drywall surfaces must be free of sanding dust.

New plaster or masonry surfaces must be allowed to cure 30 days before applying base coat. Cured plaster should be hard, have a slight sheen and maximum PH of 10; soft, porous or powdery plaster indicates improper cure. Never sand a plaster surface; knife off any protrusions and prime plaster before and after applying patching compound. Poured or pre-cast concrete with a very smooth surface should be etched or abraded to promote adhesion, after removing all form release agents and curing compounds. Remove any powder or loose particles before priming. Wood substrates must be thoroughly dry.

Difficult Substrates: Benjamin Moore offers a variety of specialty primers for use over difficult substrates such as bleeding woods, grease stains, crayon markings, hard glossy surfaces, galvanized metal or other substrates where paint adhesion or stain suppression is a particular problem. Your Benjamin Moore® retailer can recommend the right problem-solving primer for your special needs.

WARNING! If you scrape, sand, or remove old paint, you may release lead dust. LEAD IS TOXIC. EXPOSURE TO LEAD DUST CAN CAUSE SERIOUS ILLNESS, SUCH AS BRAIN DAMAGE, ESPECIALLY IN CHILDREN. PREGNANT WOMEN SHOULD ALSO AVOID EXPOSURE. Wear a NIOSH approved respirator to control lead exposure. Clean up carefully with a HEPA vacuum and a wet mop. Before you start, find out how to protect yourself and your family by logging onto Health Canada @ https://www.canada.ca/en/health-canada/services/environmental-workplace-health/environmental-contaminants/lead/lead-information-package-some-commonly-asked-questions-about-lead-human-health.html

Primer/Finish Systems

New surfaces should be fully primed, and previously painted surfaces may be primed or spot primed as necessary. For best hiding results, tint the primer to the approximate shade of the finish coat, especially when a significant colour change is desired. **Special Note**: Certain custom colours require a Deep Colour Base Primer tinted to a special prescription formula to achieve the desired colour. Consult your retailer.

Wood, and engineered wood products
Primer: Ultra Spec® 500 Interior Latex Primer (K534) or Fresh Start® All-Purpose Alkyd Primer (K024)
Finish: 1 or 2 coats of the Ultra Spec® 500 interior finish of your choice.

Drywall
Primer: Ultra Spec® 500 Interior Latex Primer (K534)
Finish: 1 or 2 coats of the Ultra Spec® 500 interior finish of your choice.

Plaster (Cured)
Primer: Ultra Spec® 500 Interior Latex Primer (K534) or Fresh Start® Multi-Purpose Latex Primer (F023)
Finish: 1 or 2 coats of the Ultra Spec® 500 interior finish of your choice.

Rough or Pitted Masonry
Primer: Ultra Spec® Masonry Interior/Exterior Hi-Build Block Filler (K571)
Finish: 1 or 2 coats of the Ultra Spec® 500 interior finish of your choice.

Smooth Poured or Precast Concrete
Primer: Ultra Spec® 500 Interior Latex Primer (K534) or Fresh Start® Multi-Purpose Latex Primer (F023)
Finish: 1 or 2 coats of the Ultra Spec® 500 interior finish of your choice.

Ferrous Metal (Steel and Iron)
Primer: Ultra Spec® HP Acrylic Metal Primer (FP04) or Super Spec HP® Alkyd Metal Primer (KP06)
Finish: 1 or 2 coats of the Ultra Spec® 500 interior finish of your choice.

Non-Ferrous Metal (Galvanized & Aluminum) All new metal surfaces must be thoroughly cleaned with Corotech® Oil & Grease Emulsifier (V600) to remove contaminants. New shiny non-ferrous metal surfaces that will be subject to abrasion should be dulled with very fine sandpaper or a synthetic steel wool pad to promote adhesion.
Primer: Ultra Spec® HP Acrylic Metal Primer (FP04)
Finish: 1 or 2 coats of the Ultra Spec® 500 interior finish of your choice

Repaint, All Substrates: Prime bare areas with the primer recommended for the substrate above.

Application

Stir thoroughly before use. Apply one or two coats. For best results, use a Benjamin Moore® Professional custom-blended nylon/polyester brush, Benjamin Moore® Professional roller, or a similar product. This product can also be sprayed.

Conditioning with Benjamin Moore® K518 Extender may be necessary under certain conditions to adjust open time or spray characteristics. The chart below is for general guidance

	Mild conditions	**Severe conditions**
	Humid (RH> 50%) with no direct sunlight & with little to no wind	Dry (RH<50%), in direct sunlight, or windy conditions
Brush: Nylon / Polyester	No thinning necessary	Add **K518 Extender** or **water:** Max of 236 ml (8 fl. oz.) to a 3.79 L of paint **Never add other paints or solvents.**
Roller: Premium Quality 10 mm roller cover		
Spray: Airless Pressure: 1,800 -3,000 psi Tip: 0.015-0.017		

Thinning/Clean Up

Thinning is unnecessary, but if required to obtain desired application properties, a small amount of clean water may be added. Never add other paints or solvents.

Cleanup: Use soap and water. Spray equipment should be given a final rinse with mineral spirits to prevent corrosion.

USE COMPLETELY OR DISPOSE OF PROPERLY. Dry empty containers may be recycled in a can-recycling program**.** Local disposal requirements vary; consult your sanitation department or state-designated environmental agency on disposal options.

Environmental, Health & Safety Information

Use only in a well ventilated area. Keep container closed when not in use. In case of spillage, absorb with inert material and dispose of in accordance with local regulations. Wash thoroughly after handling.

KEEP OUT OF REACH OF CHILDREN
PROTECT FROM FREEZING

Refer to Safety Data Sheet for additional health and safety information.

Benjamin Moore & Co., Ltd. 8775 Keele St., Concord, ON L4K 2N1 1-800-361-5898 www.benjaminmoore.ca M72 K534 CE 050218
Benjamin Moore, Fresh Start, Gennex, Green Promise, Super Spec HP, Ultra Spec and the triangle "M" symbol are registered trademarks of Benjamin Moore & Co., Ltd. Cradle to Cradle Certified is a certification mark licensed by the Cradle to Cradle Products Innovation Institute. This product is not endorsed by or a division of CHPS. This product is provided by Benjamin Moore, not CHPS. All other marks belong to their respective owners.
©2015, 2018 Benjamin Moore & Co., Ltd. All rights Reserved

2.6.3 - requires a G7 Finish

FIRE RETARDANT PAINT
LATEX INTUMESCENT COATING
FLAT FINISH FR-110

Features

- Intumescent product
- Flame Spread Rating: Class "A" when tested in accordance with ASTM E-84 (NFPA 255) and S-102.
- Applies like a regular paint
- Soap and water cleanup
- Low VOC

General Description

Insl-x® Fire Retardant Paint is a high-quality latex decorative, intumescent, fire retardant coating for interior ceilings, walls and trim. This product provides a high-hiding flat finish that retards flame spread by reacting to heat and forming a thick cellular char blanket (intumescence). By reducing excessive heat penetration, this product retards flame spread and minimizes smoke generation. It is suitable for primed or previously painted wood, drywall, cellulose tile, cured plaster, masonry and metal. It applies like a conventional latex paint, low in VOCs, and washes without spotting.

Recommended For

For interior use on primed or previously painted wood, drywall, cellulose tile, cured plaster, masonry and metal. NOTE: Top coating this product will reduce its intumescent properties.

Limitations

- Use product when surface temperature is between 50ºF (10°C) and 95 ºF (35°C).

Product Information

Colors — Standard:

White FR-110

— Tint Bases:

Can be tinted with up to 2 oz. of Universal Colorants.

— Special Colors:

Contact your dealer.

Certification & Qualifications :

The products supported by this data sheet contain a maximum of 50 grams per liter VOC/VOS (0.42 lbs. /gal.) excluding water & exempt solvents.

This product is compliant under the Ozone Transport Commission regulations as a Flat Coating.

This product meets qualifications for LEED (Leadership in Energy and Environmental Design) projects as a Flat Coating.

MPI: Is currently approved under MPI #64

UL Flame Spread Rating: Class "A"; tested in accordance with ASTM E-84-10/30 (NFPA 255) and S-102; tested over Douglas fir.

Standard 10 Minute Test Results	
Flame Spread Index	0
Smoke Developed Index	35
30 Minute Extended Test Results:	
Flame Spread Index	Pass
Smoke Developed Index	Pass

Technical Assistance:

Available through your local authorized independent dealer. For the location of the dealer nearest you, call 1-866-708-9180, or visit www.insl-x.com

Technical Data◊		White
Vehicle Type		Vinyl Acrylic
Pigment Type		Titanium Dioxide
Volume Solids		46.0 ± 1.0%
Coverage per Gallon and per coat at Recommended Film Thickness		
Note: 10 minute burn class A rating. ASTM-E-84 with spread rate: 2 coats at 300-330 square feet/gallon (4.7-5.2 mils WFT and 2.2-2.4 mils DFT each)		
Note: 30 minute burn class A rating. ASTM E-84 with spread rate: 2 coats at 150-165 square feet/gallon (9.5-10.4 mils WFT and 4.4-4.8 mils DFT each).		
Depending on surface texture and porosity. Be sure to estimate the right amount of paint for the job. This will ensure color uniformity and minimize the disposal of excess paint.		
Dry Time @ 77°F (25°C) @ 50% RH	– Tack Free	30 Minutes
	– To Recoat	4 Hours
High humidity and cool temperatures will result in longer dry, recoat and service times.		
Dries By		Coalescence
Viscosity		70 – 80 KU
Flash Point		N/A
Gloss / Sheen		Flat (<10 @ 85°)
Surface Temperature at Application	– Min.	50°F
	– Max.	95°F
Thin With		Not Necessary
Clean Up Thinner		Warm, Soapy Water
Weight Per Gallon		10.8 lbs.
Storage Temperature	– Min.	50°F
	– Max.	90°F

Volatile Organic Compounds (VOC)

45 Grams/Liter 0.37 Lbs./Gallon

◊ Reported values are for White, Contact dealer for values of other bases or colors.

Surface Preparation

Surfaces to be painted must be clean, dry and free of oil, grease, dust, rust, mill scale, loose paint, chalk and other contaminants that could interfere with adhesion. Glossy surfaces should be dulled by abrading the surface.

Previously Painted Surfaces: No primer is needed if surface is in good condition. Clean and sand as needed.

Ferrous Metal: Remove loose rust and mill scale with a grinder, scraper, wire brush or sandpaper. Remove oil and grease as necessary using an oil and grease emulsifying cleaner. Prime bare spots with metal primer.

Wood/Drywall: Spot prime patched and spackled areas with the recommended primer before top-coating.

WARNING! If you scrape, sand, or remove old paint, you may release lead dust. LEAD IS TOXIC. EXPOSURE TO LEAD DUST CAN CAUSE SERIOUS ILLNESS, SUCH AS BRAIN DAMAGE, ESPECIALLY IN CHILDREN. PREGNANT WOMEN SHOULD ALSO AVOID EXPOSURE. Wear a NIOSH approved respirator to control lead exposure. Clean up carefully with a HEPA vacuum and a wet mop. Before you start, find out how to protect yourself and your family by contacting the National Lead Informational Hotline at 1-800-424-LEAD or log on to www.epa.gov/lead .

Application

Stir this product thoroughly before use. Once stirred, Insl-x Fire Retardant Paint is ready to use. Do not incorporate any additives into this product and thin with water only as needed. Do not apply if surface or air temperatures are below 50 °F or above 95 °F.

Brush: Synthetic Bristle only.

Roller: 3/8” to 1/2” Nap Synthetic Roller

Airless Spray: Fluid Pressure – 1500 to 2500 psi.
Tip Size - .013 to .017

Clean Up

Clean all equipment immediately after use with soap and water. Spray equipment should be given a final rinse with mineral spirits to prevent corrosion.

USE COMPLETELY OR DISPOSE OF PROPERLY. **Local disposal requirements vary; consult your sanitation department or state-designated environmental agency on disposal options.**

Environmental Health & Safety Information

Warning

Suspected of damaging fertility or the unborn child

Prevention: Obtain special instructions before use. Do not handle until all safety precautions have been read and understood. Use personal protective equipment as required.

Response: If exposed or concerned, get medical attention.

Storage: Store locked up.

Disposal: Dispose of contents /container to an approved waste disposal plant.

WARNING Cancer and Reproductive Harm–
www.P65warnings.ca.gov

This document represents hazards of the product referenced above. Refer to the individual Safety Data Sheet for hazards of the specific product you will be using.

KEEP OUT OF REACH OF CHILDREN
KEEP FROM FREEZING

Refer to Safety Data Sheet for additional health and safety information.

Manufactured by Benjamin Moore & Co., 101 Paragon Drive, Montvale, NJ 07645 Tel: 866-708-9180 Fax: 888-248-2143 www.Insl-x.com M72 FR-110 US 060618
©2017, 2018 Benjamin Moore & Co. All trademarks belong to their respective owners All rights reserved

STIX®

WATERBORNE BONDING PRIMER

SXA-110

Features

- Strongly Bonds to Glossy Surfaces
- Unparalleled Adhesion to the Most Challenging Surfaces.
- Excellent Holdout
- Soap & Water Clean-up
- Cures as low as 35 °F (1.7 °C)

General Description

Stix® Waterborne Bonding Primer is a premium quality, waterborne, acrylic urethane primer/sealer with unparalleled adhesion to the most challenging surfaces, including PVC, Vinyl, Plastic, Glass, Tile, Glazed Block, Glossy Paints, Pre-Coated Siding, Fiberglass, and Galvanized Metals. Stix is also ideal for use on plaster, drywall, wood, and non-ferrous metals, where a low ambient or surface temperature would present a problem for conventional primers. Offers an extremely hard film when cured. Use it on interior and exterior surfaces and topcoat with almost any type of coating including Alkyd, Acrylic Latex, Urethane, Epoxy, and Lacquer Finishes. Stix levels to a smooth surface and cleans up with soap and water.

Recommended For

Interior and Exterior surfaces. Drywall, Plaster, Ceiling, Acoustical Tile, Wood Trim & Doors, Formica, Ceramic Tiles, Glossy Surfaces, PVC Plastic, Masonry Walls, Wood, Trim, Shutters, Masonry, Stucco, Concrete, Cement Block, Galvanized Metal, Aluminum, etc.

Limitations

- Apply when air and surface temperatures are above 35 °F
- Do not apply in direct sunlight or on a hot surface. Avoid rain, moisture or high humidity for the first 24 hours of curing
- Not intended for immersion service or continuous water contact. Not for below grade applications
- Not recommended for use over polyethylene or polypropylene. Stix® must be top coated for exterior use
- Not recommended over Kynar® (and similar finishes) unless tested and approved by the buyer
- Not recommended as a whole house exterior primer over wood

Product Information

Colors — Standard:

SXA-110, White

— Tint Bases:

N/A

Can be Tinted With a Maximum of 2 oz. Universal Colorant per gallon

— Special Colors:

Contact your dealer.

Certifications & Qualifications:

All products supported by this data sheet contain a maximum of 100 grams per liter VOC/VOS (.83 lbs. /gal.) excluding water & exempt solvents.

Qualifies for LEED® v4 Credit

Qualifies for CHPS low emitting credit
(Collaborative for High Performance Schools)

CDPH v1 Emission Certified

Technical Assistance:

Available through your local authorized independent Insl-x dealer. For the location of the dealer nearest you, call 1-866-708-9180 or see www.insl-x.com

Technical Data◊		White
Vehicle Type		Urethane Modified Acrylic
Pigment Type		Titanium Dioxide
Volume Solids		40.0 ± 1.0%
Coverage per Gallon at Recommended Film Thickness		300 – 400 Sq. Ft.
Recommended Film Thickness	– Wet	4.0 - 5.5 mils
	– Dry	1.6 - 2.2 mils
Depending on surface texture and porosity. Be sure to estimate the right amount of paint for the job. This will ensure color uniformity and minimize the disposal of excess paint.		
Dry Time @ 77 °F (25 °C) @ 50% RH	– Tack Free	30 Minutes
	– To Recoat	3 – 4 Hours
	– Full Cure	3 – 4 Days
High humidity and cool temperatures will result in longer dry, recoat and service times.		
Dries By		Coalescence
Viscosity		70 – 80 KU
Flash Point		200° F or greater (TT-P-141, Method 4293)
Gloss / Sheen		Flat
Surface Temperature at Application	– Min.	35 °F
	– Max.	90 °F
Thin With		Do not Thin
Clean Up Thinner		Warm, Soapy Water
Weight Per Gallon		11.0 lbs.
Storage Temperature	– Min.	45 °F
	– Max.	95 °F

Volatile Organic Compounds (VOC)
87.6 grams/liter .73 lbs./gallon

◊ Reported values are for White. Contact dealer for values of other bases or colors.

Surface Preparation

General – All surface areas to be painted should be clean, dry, sound and free of all dirt, grease, oils, waxes, mildew and any other surface contaminants that can cause paint failure. Dirt and chalk should be thoroughly removed by scrubbing with warm soapy water. Surface wax should be removed with a commercial wax stripper. Grease residue should be removed with a grease and oil emulsifier. Remove all loose chipping, cracking and peeling from previously painted surfaces by hand scraping, sanding, wire brushing and/or by use of power tool cleaning methods such as electric sanders, grinders, etc. Remove any loose rust, mill scale, rust deposits from metal surfaces by hand or power tool cleaning according to SSPC Standards. Repair/replace any seriously damaged and/or delaminated surface areas. Use over most glossy surfaces without sanding.

Mildew – Surface areas affected by mildew should be thoroughly hand scrubbed with a soft to medium bristle scrub brush and a solution of one cup Tri-Sodium Phosphate or a nonammoniated detergent cleaner mixed with one-part household bleach* and three parts warm water, per gallon solution, Allow solution to stand on the affected surface areas for approximately 10 – 20 minutes, then rinse thoroughly with clean water and allow 24 – 48 hours to dry.

*Follow bleach manufacturer's instructions for safe handling and use of bleach solution.

SPECIAL NOTE ON SURFACE PREPARATION:

Glossy Surfaces – Although Stix® is formulated to be applied to hard to coat surfaces without the need for sanding, it is recommended that proper surface preparation still be completed to enhance adhesion properties. Surfaces such as Formica, ceramic tile and glossy painted surfaces should be properly deglossed. Once applied, allow Stix® to cure for approximately 3 to 4 days to achieve maximum resistance to scrape off. However, Stix® may be topcoated with a quality latex or oil-based finish within 1 to 2 hours, depending on overall drying conditions.

WARNING! If you scrape, sand or remove old paint, you may release lead dust. **LEAD IS TOXIC. EXPOSURE TO LEAD DUST CAN CAUSE SERIOUS ILLNESS, SUCH AS BRAIN DAMAGE, ESPECIALLY IN CHILDREN. PREGNANT WOMEN SHOULD ALSO AVOID EXPOSURE. Wear a NIOSH-**approved respirator to control lead exposure. Carefully clean up with a HEPA vacuum and a wet mop. Before you start, find out how to protect yourself and your family by contacting the National Lead Information Hotline at 1-800-424-LEAD or log on to www.epa.gov/lead

Application

Stix® may be applied by brush, roller, pad applicator, or airless spray. Use a high quality nylon brush or a ¼" – ½" synthetic nap roller cover. Do not thin. Do not apply when surface, air, or product temperature is below 35 °F. Do not paint in direct sun or on a hot surface. If possible, plan your painting to avoid rain, moisture, or high humidity for the first 24 hours of curing. Stop application a minimum of two hours before rain or dew is expected. Do not paint if surface temperature is within 5 °F of the dew point.

When top coating with two component paints, allow 24 hours dry time before painting. Always test questionable substrates such as plastics, composites, Kynars, and polyester surfaces by applying a small area for adhesion and top-coat compatibility before proceeding with the entire job.

Airless Spray: Tip range between .013 and .017. Total fluid output pressure at the tip should not be less than 2200 PSI. Preferred pressure is 2500 PSI.

Clean Up

Clean brushes, rollers and other equipment with warm, soapy water immediately after use. If dry, clean with lacquer thinner.

USE COMPLETELY OR DISPOSE OF PROPERLY. Dry empty containers may be recycled in a can recycling program. **Local disposal requirements vary; consult your sanitation department or state-designated environmental agency on disposal options.**

Environmental Health & Safety Information

Cancer Hazard. Contains Crystalline Silica which can cause cancer when in respirable form (spray mist or sanding dust).

Use only with adequate ventilation. Do not breathe spray mist or sanding dust. Ensure fresh air entry during application and drying. Avoid contact with eyes and prolonged or repeated contact with skin. Avoid exposure to dust and spray mist by wearing a NIOSH approved respirator during application, sanding and clean up. Follow respirator manufacturer's directions for respirator use. Close container after each use. Wash thoroughly after handling.

WARNING Cancer and Reproductive Harm– www.P65warnings.ca.gov

FIRST AID: In case of eye contact, flush immediately with plenty of water for at least 15 minutes; for skin, wash thoroughly with soap and water. If symptoms persist, seek medical attention. If you experience difficulty breathing, leave the area to obtain fresh air. If continued difficulty is experienced, get medical attention immediately.

IN CASE OF SPILL – Absorb with inert material and dispose of as specified under "Clean Up".

KEEP OUT OF REACH OF CHILDREN
PROTECT FROM FREEZING

Refer to Safety Data Sheet for additional health and safety information.

Manufactured by Benjamin Moore & Co. 101 Paragon Drive, Montvale, NJ 07645 Tel: 866-708-9180 Fax: 888-248-2143 www.lnsl-x.com M72 SXA-110 US 060618
All trademarks belong to their respective owners. All other marks are the property of their respective owner. This product is not endorsed by or a division of CHPS. This product is provided by Benjamin Moore, not CHPS. © 2017, 2018 Benjamin Moore & Co. All rights reserved

Benjamin Moore

COROTECH HIGH PERFORMANCE

ACRYLIC METAL PRIMER V110

Features

- High solids
- Suitable for occupied areas
- Can be recoated in just 4 hours

General Description

Acrylic Metal Primer is a water-reducible, rust-inhibitive primer for steel, iron, and non-ferrous metal. It provides excellent adhesion to a range of hard-to-coat surfaces and can even be applied over tightly adhering rust. Designed for light-to-moderate industrial exposures, this product can be top coated with a wide variety of coatings.

Recommended For

Carbon Steel, Iron, Aluminum, Galvanized, Other Non-Ferrous Metals, Glass, Lexan, Concrete, Drywall. Acrylic Metal Primer is designed for use in general metal finishing/fabrication, food/beverage processing, chemical processing, industrial maintenance/refurbishment, and other segments where a rust inhibitive, water cleanup primer is necessary.

Limitations

- Do not apply if material, substrate or ambient temperature is below 10 °C (50 °F). Relative humidity should be below 90%.
- Do not apply if within 5 degrees of dew point or if rain is expected within 12 hours of application.
- Not for immersion service. Not for use on floors.
- Not for use on Kynar unless tested and approved by user.

Product Information

Colours — Standard:

White (01), Red (20)

Can be tinted with up to 60 mL of Universal Colorants.

— Tint Bases:

N/A

— Special Colours:

Contact your retailer.

Certification & Qualifications :

The products supported by this data sheet contain a maximum of 250 grams per litre VOC /VOS excluding water and exempt solvents.

This product is compliant as an Industrial Maintenance coating.

Meets Performance Requirements of TT-P-1975 and MIL-P-28577

Meets SSPC Paint #23

This product has been approved by CFIA (Canadian Food Inspection Agency) for use in Food Processing Facilities.

Customer Information Centre:

1-800-361-5898, info@benjaminmoore.com, www.benjaminmoore.ca

Technical Data◊		White
Vehicle Type		Water-based Acrylic
Pigment Type		Titanium Dioxide
Volume Solids		40 ± 1.0%
Coverage per 3.79 L at Recommended Film Thickness		Clean Metal 32.5 - 41.8 Sq./M Tight Rust 14.8 - 20.4 Sq./M
Tight Rust	– Wet	7.3 - 10.0 mils
	– Dry	3.0 - 4.0 mils
Clean Metal	– Wet	3.5 – 4.6 mils
	– Dry	1.4 – 1.9 mils
Depending on surface texture and porosity.		
Dry Time @ 25 °C (77 °F) @ 50% RH	– Tack Free	1 Hour
	– To Recoat	4 Hours
	– Cure Time	7 – 10 Days
High humidity and cool temperatures will result in longer dry, recoat and service times.		
Dries By		Coalescent
Viscosity		85 – 90 KU
SAG Rating		Passes 9-10 mils wet (Leneta)
Flash Point		93.2 °C (200° F) (TT-P-141, Method 4293)
Gloss/Sheen		5 – 10 @ 60°
Surface Temperature at Application	– Min.	10 °C (50 °F)
	– Max.	32 °C (90 °F)
Thin With		Clean Water
Clean Up Thinner		Warm, Soapy Water
Weight Per 3.79 L		4.9 kg (10.9 lbs)
Storage Temperature	– Min.	4.4° C (40 °F)
	– Max.	35° C (95 °F)

Volatile Organic Compounds (VOC)

199 Grams/Litre

◊ Reported values are for White. Contact retailer for values of other bases or colours.

Surface Preparation

The performance of this product is directly dependent upon the degree of surface preparation employed. All dirt, oils and accumulated salts must be removed prior to employing specific surface preparation methods. SSPC-SP 1 Solvent Cleaning using Corotech V600 Oil & Grease Emulsifier will best accomplish this task.

WARNING! If you scrape, sand, or remove old paint, you may release lead dust. LEAD IS TOXIC. EXPOSURE TO LEAD DUST CAN CAUSE SERIOUS ILLNESS, SUCH AS BRAIN DAMAGE, ESPECIALLY IN CHILDREN. PREGNANT WOMEN SHOULD ALSO AVOID EXPOSURE. Wear a NIOSH approved respirator to control lead exposure. Clean up carefully with a HEPA vacuum and a wet mop. Before you start, find out how to protect yourself and your family by logging onto Health Canada @ https://www.canada.ca/en/health-canada/services/environmental-workplace-health/environmental-contaminants/lead/lead-information-package-some-commonly-asked-questions-about-lead-human-health.html

Ferrous metals: All loose rust and mill scale should be removed prior to application of this product. This is best accomplished by abrasive blasting. A minimum of SSPC-SP 6 Commercial Blast is recommended for severe environmental exposures. Small areas may be cleaned in accordance with SSPC-SP 2 Hand Tool Cleaning or SSPC-SP 3 Power Tool Cleaning or SSPC-SP 11 Power Tool Cleaning to Bare Metal. Tightly adhering rust may be coated over provided the surface is intended for use in mild atmospheric exposures.

Galvanized steel, aluminum and other non-ferrous metals: Clean bare metal with Corotech V600 Oil & Grease Emulsifier.

Concrete should have form release agents and hardening/curing compounds removed prior to coating. This product is not intended for use on floors.

Application

Mix thoroughly before application. The use of a drill mixer at low speed will best accomplish this task. Should not require thinning, however small amounts of water may be used if necessary.

Airless Spray: Tip range between .015 and .019. Total fluid output pressure at tip should not be less than 2,400 psi.

Air Spray (Pressure Pot): DeVilbis MBC or JGA gun, with 704 or 765 air cap and Fluid Tip E.

NOTE: Do not allow material to remain in hoses, gun or spray equipment. Thoroughly flush all equipment with recommended thinner.

Brush: Synthetic Bristle. / **Roller:** High quality short nap cover.

NOTE: Do not apply if material, substrate or ambient temperature is below 7.2° C (45° F). Relative humidity should be below 90%. Do not apply if within 5 degrees of dew point or if rain is expected within 12 hours of application.

TEST DATA	
Flexibility (ASTM D1737)	Pass 3.2 mm (1/8") Mandrel
Dry Heat Resistance	93.2 °C (200 °F)
Wet Heat Resistance	65.6 °C (150 °F)
Adhesion (ASTM D3359)	Pass 5B
Salt Spray (ASTM B117) (2 Coats w/1 Topcoat; 1000 Hours	Rust Breakthrough: 10 Rust Area: 0.01%
Abrasion Resistance (ASTM D4060) CS-17 Wheel, 1000 Cycles, 1000 g Load	100 mg Loss
Accelerated Weathering (ASTM G53) 500 Hours	90% Gloss Retention <0.25 DE Colour Change (CMC)
CHEMICAL RESISTANCE GUIDE (NON-IMMERSION)	
Fresh Water	See Finish Coat Data Sheets for Resistance Information.
Salt Water	
Acids	
Alkalis	
Solvents	
Fuel	
Acidic Salt Solutions	
Alkaline Salt Solutions	
Neutral Salt Solutions	

SYSTEMS RECOMMENDATIONS
COMPATIBLE FINISHES
V220 Line, V300 Line, V330 Line, V400 Line, V410, V440 Line, V500 Line, V510 Line, 540 Line, and Other Acrylics, Vinyl Acrylics & Alkyds
V110 Waterborne DTM Metal Primer can be used as a barrier coat on top of older coatings prior to application of high performance coatings with "hotter" solvents, such as 2 component epoxies and urethanes.
For substrates other than listed above, or for usage in severe environmental conditions, please consult with Corotech® Technical Service.

Clean Up

Clean up with warm, soapy water followed by a clean water rinse.

Environmental Health & Safety Information

Danger

May cause cancer

Causes damage to organs through prolonged or repeated exposure

Prevention: Obtain special instructions before use. Do not handle until all safety precautions have been read and understood. Use personal protective equipment as required. Do not breathe dust/fume/mist/vapours/spray. Wash face, hands and any exposed skin thoroughly after handling. Do not eat, drink or smoke when using this product.

Response: If exposed or concerned get medical attention.

Storage: Store locked up.

Disposal: Dispose of contents/container to an approved waste disposal plant.

This document represents hazards of the product referenced above. Refer to the individual Safety Data Sheet for hazards of the specific product you will be using.

KEEP FROM FREEZING
FOR PROFESSIONAL USE ONLY

Refer to Safety Data Sheet for additional health and safety information.

Manufactured by Benjamin Moore & Co., Ltd. 8775 Keele St., Concord, ON L4K 2N1 Tel: 800-361-5898 Fax: 888-248-2143 www.benjaminmoore.ca M72 V110 CE 061418
© 2017, 2018 Benjamin Moore & Co., Ltd. Benjamin Moore and the triangle "M" symbol are registered trademarks licensed to Benjamin Moore & Co.
All trademarks belong to their respective owners All rights reserved

W2	EXISTING		PT	PT2	EXISTING	NEW PAINT
W3	EXISTING		PT	PT2	EXISTING	NEW PAINT
W4	EXISTING		PT	PT2	EXISTING	NEW PAINT

DOOR SCHEDULE

DOOR NAME	ROOM NAME	DOOR				FRAME		RATING	HARDWARE	REMARKS
		SIZE	TYPE	MAT.	FINISH	MAT.	FINISH	(MIN.)		
D100.1	STAIR CASE	914 x 2134	B	IHM	PT2	TB PS	PT2	--	GROUP 001	NEW DOOR
D101.1	MECHANICAL	914 x 2134	A	HM	PT2	PS	PT2	45	GROUP 002	NEW DOOR
D102.1	VESTIBULE #1	914 x 2134	A	HM	PT2	PS	PT2	45	GROUP 003	NEW DOOR
D103.1	GENERATOR	914 x 2134	A	HM	PT2	PS	PT2	45	GROUP 002	NEW DOOR
D104.1	SLUDGE TRAILER	4267 x 3900	E	IHMOH	PT4	--	--	--	GROUP 004	REPLACE EXIST. O.H. DOOR WITH NEW
D105.1	BOILER ROOM	914 x 2134	A	HM	PT2	PS	PT2	45	GROUP 002	NEW DOOR
D106.1	DAF TANKS	DELETED	--	--	--	--	--	--	--	
D107.1	LOWER HEADWORKS	EXISTING	A	--	PT2	--	PT2	--	--	NEW PAINT ONLY
D107.2	LOWER HEADWORKS	3050 x 2590	E	IHMOH	PT4	--	--	--	GROUP 004	REPLACE EXIST. O.H. DOOR WITH NEW
D108.1	VESTIBULE #2	EXISTING	A	--	PT1	--	--	--	--	NEW PAINT ONLY
D108.2	VESTIBULE #2	EXISTING	A	--	--	--	--	--	--	
D200.1	STAIR CASE	914 x 2134	B	HM	PT2	PS	PT2	45	GROUP 003	NEW DOOR
D202.1	ELECTRICAL #2	914 x 2134	A	HM	PT2	PS	PT2	45	GROUP 006	NEW DOOR
D203.1	PRESS ROOM	3050 x 2590	E	IHMOH	PT4	--	--	--	GROUP 004	REPLACE EXIST. O.H. DOOR WITH NEW
D204.1	POLYMER STORAGE	3050 x 3050	E	--	--	--	--	--		
D205.1	VESTIBULE #3	914 x 2134	B	IHM	PT1	TB PS	PT1	--	GROUP 001	REPLACE EXIST. DOOR WITH NEW
D205.2	VESTIBULE #3	EXISTING	A	--	--	--	--	--	--	
D206.1	OFFICE	EXISTING	A	--	PT2	--	PT2	--	--	NEW PAINT ONLY
D207.1	WASHROOM	EXISTING	A	--	PT2	--	PT2	--	--	NEW PAINT ONLY
D208.1	LAB	EXISTING	A	--	PT2	--	PT2	--	--	NEW PAINT ONLY
D209.1	ELECTRICAL #1	EXISTING	A	--	--	--	--	45	--	
D210.1	UPPER HEADWORKS	EXISTING	A	--	--	--	--	--	--	
D211.1	VESTIBULE #4	EXISTING	A	--	--	--	--	45	--	

LEGEND

IHM	INSULATED HOLLOW METAL
IMOH	INSULATED METAL OVERHEAD DOOR
PT	PAINTED
TB	THERMALLY BROKEN
PS	PRESSED STEEL
SS	STAINLESS STEEL

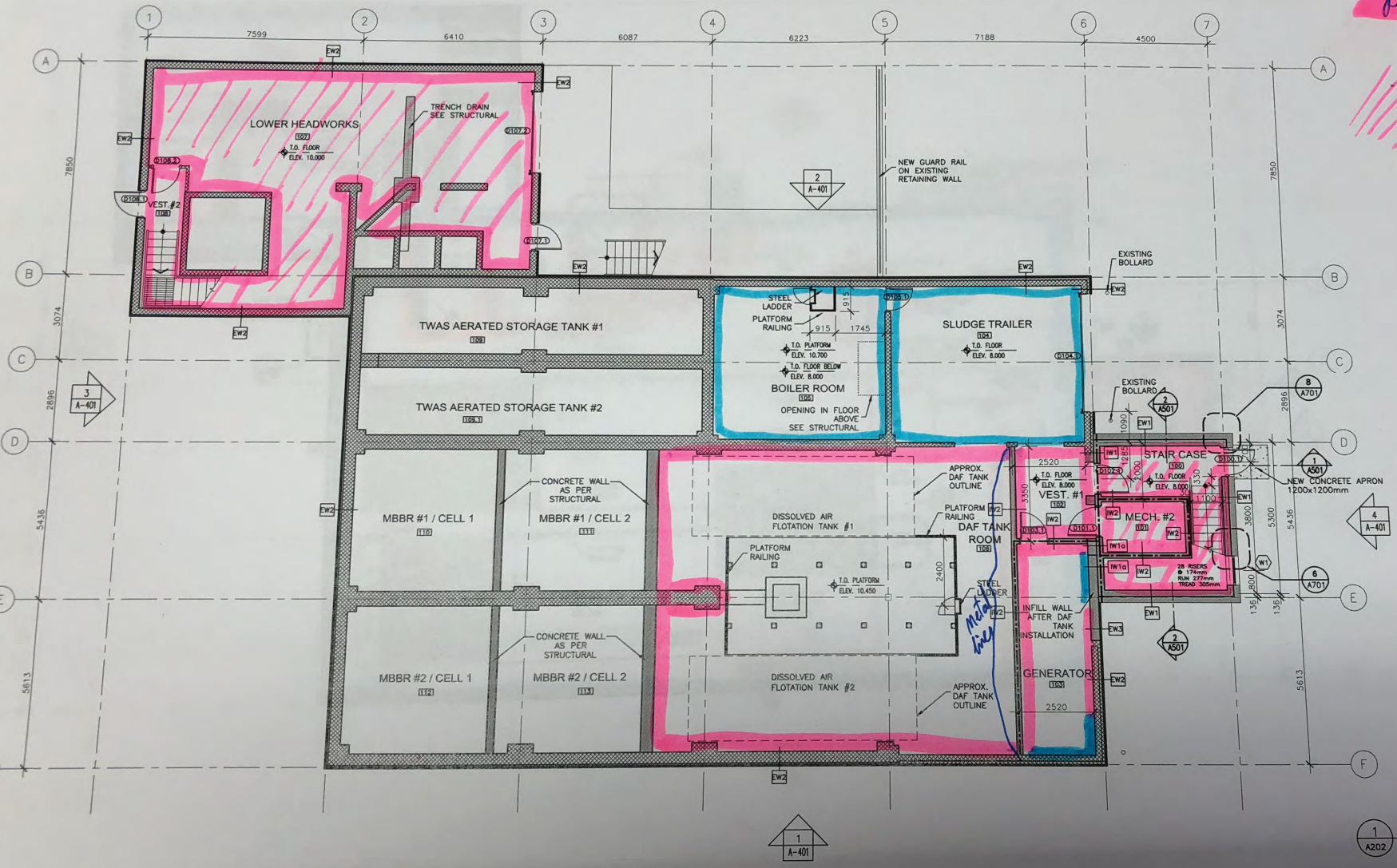

1 A202 LOWER FLOOR PLAN 1:75

PLAN NORTH

clean

PT1

ceiling

metal liner

Consultants

Permit-Seal

Stantec Architecture Ltd. PERMIT No. 006 Issued pursuant to Section 29 of the The Architects Act of the Northwest Territories

#110126045

IFC

May 25, 2018 JONI BERG ARCHITECT

#110126045

IFC

NUNAMI

STANTEC LIMITED

1088C Noble House
Iqaluit NU
www.stantec.com

The Contractor shall verify and be responsible for all dimensions. DO NOT scale the drawing - any errors or omissions shall be reported to Stantec without delay.
The Copyrights to all designs and drawings are the property of Stantec. Reproduction or use for any purpose other than that authorized by Stantec is forbidden.

Client/Project

Iqaluit

IQALUIT WASTEWATER TREATMENT PLANT UPGRADE

City of Iqaluit, Nunavut

File Name: A202-LOWER FLOOR NEW | TF Dwn. | JB Chkd. | JB Dsgn. | 18.04.09 YY.MM.DD

Title

ARCHITECTURAL
LOWER FLOOR PLAN
NEW CONSTRUCTION

Project No. 110126045 | Scale 1:75

Drawing No. A202 | Sheet 3 of 12 | Revision 0

By	Appd.	YY.MM.DD
TF	GP	18.05.23
TF	GP	18.04.09

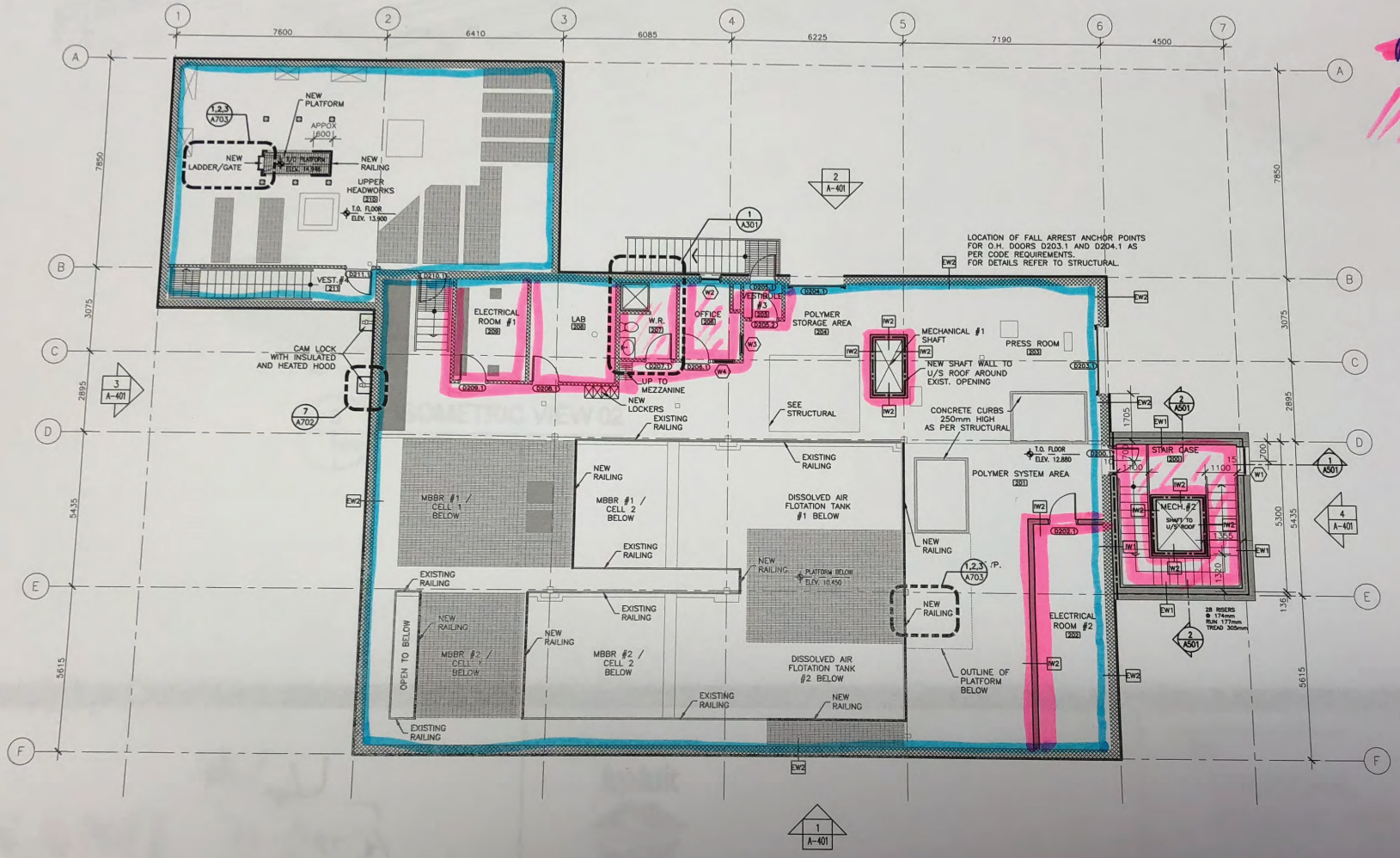

LEGEND

- EXISTING WALL
- NEW WALL
- 1 HR FIRE RATED ASSEMBLY

NOTES:

1. FOR STEEL GRATING, SEE STRUCTURAL
2. HANDRAILS IN NEW STAIRCASE TO BE PAINTED; ALL OTHER NEW RAILING TO BE GALVANIZED

PLAN NORTH

1 A204 UPPER FLOOR PLAN 1:75

Revision	By	Appd.	YY.MM.DD
ISSUED FOR CONSTRUCTION	TF	GP	18.05.23
0 ISSUED FOR BID	TF	GP	18.04.09
Issued	By	Appd.	YY.MM.DD

Consultants

Permit-Seal

Stantec Architecture Ltd. PERMIT No. 006 Issued pursuant to Section 29 of the The Architects Act of the Northwest Territories #110126045

IWWTP - IFC

May 23, 2018 JOHN DERB ARCHITECT #110126045

IWWTP - IFC

NUNAMI STANTEC LIMITED

1088C Noble House
Iqaluit NU
www.stantec.com

The Contractor shall verify and be responsible for all dimensions. DO NOT scale the drawing - any errors or omissions shall be reported to Stantec without delay.
The Copyrights to all designs and drawings are the property of Stantec. Reproduction or use for any purpose other than that authorized by Stantec is forbidden.

Client/Project

Iqaluit

IQALUIT WASTEWATER TREATMENT PLANT UPGRADE

City of Iqaluit, Nunavut

File Name: A204-UPPER FLOOR NEW

Dwn.	Chkd.	Dsgn.	YY.MM.DD
TF	JB	JB	18.04.09

Title

ARCHITECTURAL
UPPER FLOOR PLAN
NEW CONSTRUCTION

Project No.	Scale
110126045	1:75

Drawing No.	Sheet	Revision
A204	5 of 12	0

SUBMITTALS IDENTIFICATION SHEET

PROJECT: Wastewater Treatment Plant Upgrade
Iqaluit, Nunavut

NUNAMI
STANTEC LIMITED
1088C Noble House
Iqaluit NU
www.stantec.com

CONTRACTOR: Kudlik Construction Ltd, Project 2018-062

Telephone: 867-979-1166

E-mail: srousseau@kudlik.biz

SUBCONTRACTOR:

PRODUCT SUBMITTED:

Person responsible:

Telephone: () E-mail:

☑ As Specified

☐ Alternate

SUPPLIER or MANUFACTURER: Cascadia

Person responsible: Vincent M. W. Liu

Telephone: 604-857-4600 E-mail: mliu@cascadiawindows.com

DESCRIPTION OF SUBMITTAL: windows

# of pages:

Reference to drawings:

Reference to specs:

Division: 08 Section: 08 54 13

REMARKS:

Windows color

REVIEW AND COMMENTS (for use by Consultants):

STANTEC PROJECT #: 110126045

SUBMITTAL # SU-024, rev1

This review by Stantec is for general conformance with the design concept of Stantec's design of the:

☐ Process ☐ Electrical
☐ Structural ☑ Other Architectural
☐ Mechanical

component(s) only and does not mean that Stantec has verified or approves the shop drawing(s). The Contractor remains solely responsible for the shop drawing(s) and this review by Stantec does not relieve the Contractor of the Contractor's responsibility for errors or omissions in the shop drawing(s) or for meeting all requirements of the contract documents. This review does not mean that Stantec approves the detailed design inherent in the shop drawing, responsibility for which shall remain with the Contractor submitting same, nor does this review mean that Stantec accepts any deviation of the shop drawing(s) from the contract documents. The Contractor is responsible for confirming all dimensions and correlating them at the job site, for all construction means, methods and techniques, and for coordination of construction work of all trades, including coordination of all shop drawings.

Stantec

☐ REVIEWED

☑ REVIEWED, AS NOTED

☐ REVISE AND RESUBMIT

☐ NOT REVIEWED

DATE July 11, 2018

BY John Berg

Submittal is accepted if color shown is Royal Blue 56081. Email confirmation has been attached.

Review of this submission is for compliance with general intent of the contract. This review does not relieve the Sub-Contractor, Supplier or Manufacturer of responsibility for error or omissions in the submission or the responsibility of meeting all requirements of the contract documents. Any deviation from the contract documents initiated by the Sub-Contractor, Supplier or Manufacturer shall be at their sole risk. QUANTITIES AND DETAIL DIMENSIONS ARE THE SUB-CONTRACTORS OR SUPPLIERS RESPONSIBILITY. VERIFY DATA WITH FIELD DIMENSIONS.

SUBMITTAL TRACKING No.: **SU-024 r1**

2018-07-06

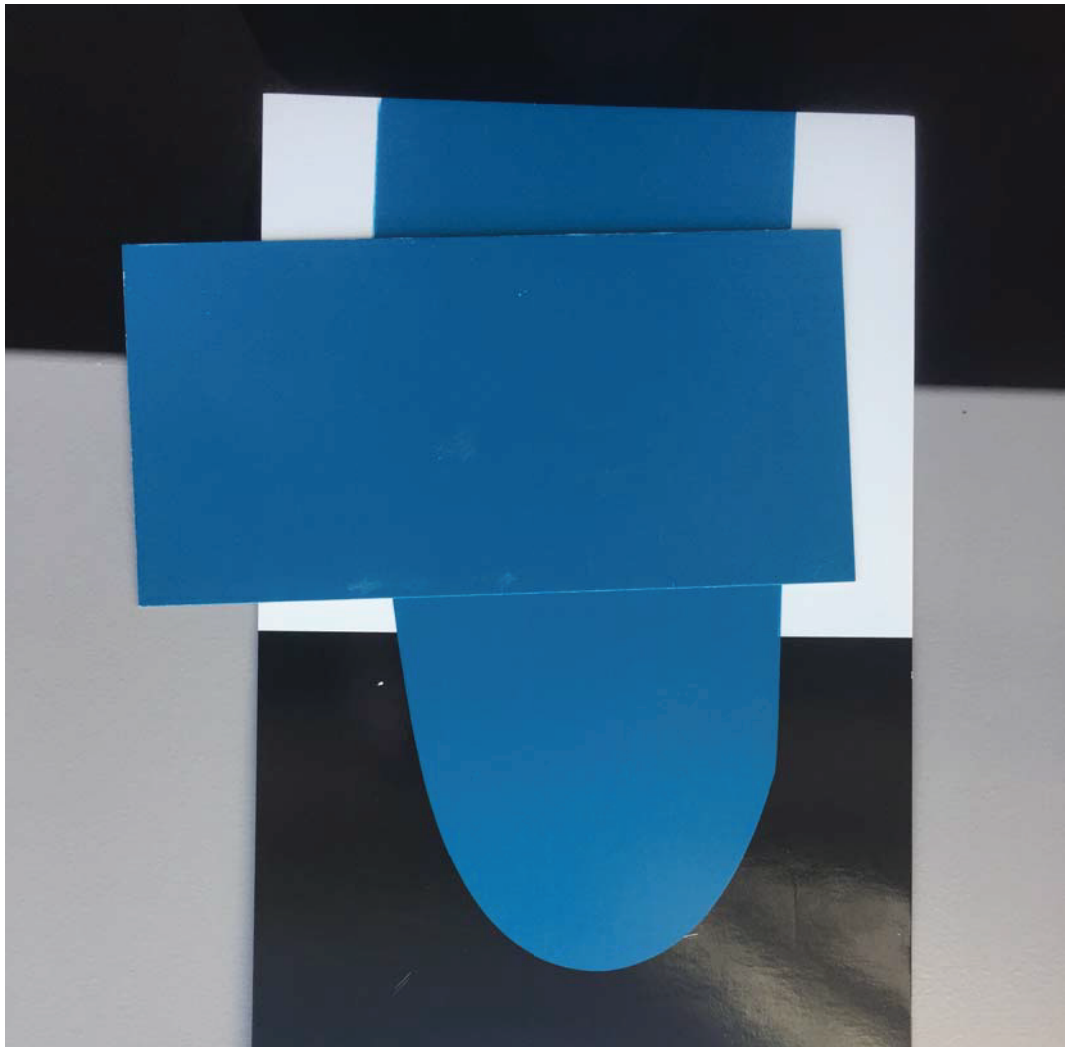

Paquin, Zach

From: Sandra Rousseau <srousseau@gely.biz>
Sent: Wednesday, July 11, 2018 11:33 AM
To: Prosko, Glenn
Cc: Paquin, Zach; Berg, John; King, Jason
Subject: RE: WWTP - SU-024 windows color rev 1

Yes it royal blue 56081
Regards
Sandra

Sandra Rousseau P.Eng.
Project Manager / Gestionnaire de projets
Phone : 418-871-3368 ext 257

Kudlik Construction Ltd.
1519 Federal Road, P.O. Box 727
Iqaluit, Nunavut
X0A 0H0
Phone : 866.781.0704
Cell.: 418.569.5650
Fax : 867.979.1169
srousseau@kudlik.biz
www.kudlikconstruction.com

Please consider the environment before printing this email!

De : Prosko, Glenn [mailto:Glenn.Prosko@stantec.com]
Envoyé : 11 juillet 2018 13:27
À : Sandra Rousseau <srousseau@gely.biz>
Cc : Paquin, Zach <Zach.Paquin@stantec.com>; Berg, John <John.Berg@stantec.com>; King, Jason <Jason.King@stantec.com>
Objet : RE: WWTP - SU-024 windows color rev 1

Sure we can sign, but not until the same question is answered - "The image doesn't list what the colour number is but if the sample you sent is royal blue 56081. Then the window colour sample is acceptable."

From: Sandra Rousseau <srousseau@gely.biz>
Sent: Wednesday, July 11, 2018 11:23 AM
To: Prosko, Glenn <Glenn.Prosko@stantec.com>
Cc: Paquin, Zach <Zach.Paquin@stantec.com>
Subject: TR: WWTP - SU-024 windows color rev 1

Hi Glenn,
My supplier want the paper signed approve.
Is it possible?
Sandra

Sandra Rousseau P.Eng.
Project Manager / Gestionnaire de projets
Phone : 418-871-3368 ext 257

Kudlik Construction Ltd.
1519 Federal Road, P.O. Box 727
Iqaluit, Nunavut
X0A 0H0
Phone : 866.781.0704
Cell.: 418.569.5650
Fax : 867.979.1169
srousseau@kudlik.biz
www.kudlikconstruction.com

Please consider the environment before printing this email!

De : Min Wen Liu (Vincent) [mailto:mliu@cascadiawindows.com]
Envoyé : 11 juillet 2018 13:22
À : Sandra Rousseau <srousseau@gely.biz>
Objet : RE: WWTP - SU-024 windows color rev 1

Would you be able to send me a photocopy of the singed approve sheet?

Thanks,

Vincent M. W. Liu
Estimator / Project Coordinator
Tel: 604 857 4600 Ext. 233

From: Sandra Rousseau [mailto:srousseau@gely.biz]
Sent: Wednesday, July 11, 2018 10:16 AM
To: Min Wen Liu (Vincent) <mliu@cascadiawindows.com>
Subject: TR: WWTP - SU-024 windows color rev 1

See below
Since the dominian is just a miss understood and you use the correct sample, please proceed.
Sandra

Sandra Rousseau P.Eng.
Project Manager / Gestionnaire de projets
Phone : 418-871-3368 ext 257

Kudlik Construction Ltd.
1519 Federal Road, P.O. Box 727
Iqaluit, Nunavut
X0A 0H0
Phone : 866.781.0704
Cell.: 418.569.5650
Fax : 867.979.1169
srousseau@kudlik.biz
www.kudlikconstruction.com

Please consider the environment before printing this email!

De : Prosko, Glenn [mailto:Glenn.Prosko@stantec.com]
Envoyé : 11 juillet 2018 13:12
À : Sandra Rousseau <srousseau@gely.biz>
Cc : Paquin, Zach <Zach.Paquin@stantec.com>; King, Jason <Jason.King@stantec.com>; Berg, John <John.Berg@stantec.com>
Objet : RE: WWTP - SU-024 windows color rev 1

Hi Sandra

Jason sent the attached email yesterday – "The image doesn't list what the colour number is but if the sample you sent is royal blue 56081. Then the window colour sample is acceptable."

So is it Royal Blue 56081? If so , then it is acceptable

Or am I missing something here?

Glenn

From: Sandra Rousseau <srousseau@gely.biz>
Sent: Wednesday, July 11, 2018 10:13 AM
To: Prosko, Glenn <Glenn.Prosko@stantec.com>; Paquin, Zach <Zach.Paquin@stantec.com>
Subject: TR: WWTP - SU-024 windows color rev 1

Hi Glenn,
Do you know if somebody else can approve before July 16th the color sample for windows?
Sandra

Sandra Rousseau P.Eng.
Project Manager / Gestionnaire de projets
Phone : 418-871-3368 ext 257

Kudlik Construction Ltd.
1519 Federal Road, P.O. Box 727
Iqaluit, Nunavut
X0A 0H0
Phone : 866.781.0704
Cell.: 418.569.5650

Fax : 867.979.1169
srousseau@kudlik.biz
www.kudlikconstruction.com

Please consider the environment before printing this email!

De : King, Jason [mailto:Jason.King@stantec.com]
Envoyé : 11 juillet 2018 12:11
À : Sandra Rousseau <srousseau@gely.biz>
Objet : Automatic reply: WWTP - SU-024 windows color rev 1

I am curently out of the office and will be returning Monday July 16. I will have no access to email at this time and will respond to your request upon my return. Should you require immediate assistance please contact our office at 867.633.2400

SUBMITTALS IDENTIFICATION SHEET

PROJECT: Wastewater Treatment Plant Upgrade
Iqaluit, Nunavut

NUNAMI
STANTEC LIMITED
1088C Noble House
Iqaluit NU
www.stantec.com

CONTRACTOR: Kudlik Construction Ltd, Project 2018-062

Telephone: 867-979-1166

E-mail: srousseau@kudlik.biz

SUBCONTRACTOR:

PRODUCT SUBMITTED:

Person responsible:

☑ As Specified

Telephone: () E-mail:

☐ Alternate

SUPPLIER or MANUFACTURER: Tapico

3260 avenue watt bureau 105 Québec (qc) G1X 4T5

Person responsible: Maryse Arbour

Telephone: E-mail: marbour@tapico.ca

DESCRIPTION OF SUBMITTAL: floor

# of pages:

Reference to drawings:

Reference to specs:

Division: 09 Section: 09 65 16

REMARKS:

REVIEW AND COMMENTS (for use by Consultants):

STANTEC PROJECT #: 110126045

SUBMITTAL # SU-025rev1

This review by Stantec is for general conformance with the design concept of Stantec's design of the:

☑ Architectural ☐ Electrical
☐ Structural ☐ Other
☐ Mechanical

component(s) only and does not mean that Stantec has verified or approves the shop drawing(s). The Contractor remains solely responsible for the shop drawing(s) and this review by Stantec does not relieve the Contractor of the Contractor's responsibility for errors or omissions in the shop drawing(s) or for meeting all requirements of the contract documents. This review does not mean that Stantec approves the detailed design inherent in the shop drawing, responsibility for which shall remain with the Contractor submitting same, nor does this review mean that Stantec accepts any deviation of the shop drawing(s) from the contract documents. The Contractor is responsible for confirming all dimensions and correlating them at the job site, for all construction means, methods and techniques, and for coordination of construction work of all trades, including coordination of all shop drawings.

Stantec

☑ REVIEWED
☐ REVIEWED, AS NOTED
☐ REVISE AND RESUBMIT
☐ NOT REVIEWED

DATE 2018-07-19

BY Jason King

Review of this submission is for compliance with general intent of the contract. This review does not relieve the Sub-Contractor, Supplier or Manufacturer of responsibility for error or omissions in the submission or the responsibility of meeting all requirements of the contract documents. Any deviation from the contract documents initiated by the Sub-Contractor, Supplier or Manufacturer shall be at their sole risk. QUANTITIES AND DETAIL DIMENSIONS ARE THE SUB-CONTRACTORS OR SUPPLIERS RESPONSIBILITY. VERIFY DATA WITH FIELD DIMENSIONS.

SUBMITTAL TRACKING No.: **SU-025 rev 1**

2018-07-18

TECHNICAL DATA

Project :
Wasterwaterplan upgrade
Iqaluit
IQA 29132-00

Dated : July 11, 2018

Submitted to:
Kudlik Construction
P.O. Box 727
1519 Federal Road
Iqaluit, NU X0A 0H0

Manufacturer :
INTERTAPE

Contractor Tapico Québec Inc.
Adress : 3260, avenue Watt
Bureau 105
Québec (Québec) G1X 4T5
Phone: 418-659-4400
Project manager: Maryse Arbour
Email: marbour@tapico.ca

Drawing # : 6
Number of pages: 3

Description:

Carbonrundum strip safety yellow

Professional verifiation

Submitted product:	**Drawing issued for:**
☑ As specified	☐ Verification
☐ Equivalent	☐ Information
☐ Substitution	☐ Coordination
	☐ Reissue

Delivery time:

Drawing reference:

Specification reference: 09 65 16
2.4.7

Note:

Where is this located? For stairs

Non-Slip Tape

SPECIALTY
ABRASIVE VINYL TAPE

INTERTAPE POLYMER GROUP®

TECHNICAL DATA SHEET

DESCRIPTION

Weather/wear resistant vinyl (PVC) with 60 grit aluminum oxide, sealed (embedded) with two.part epoxy and coated with an aggressive acrylic pressure.sensitive adhesive. Adheres well to most clean/dry surfaces under a wide range of conditions. Moisture resistant. Coated paper release liner.

PRODUCT APPLICATION

For slippery areas such as stairways, steps, trailer, ladders, skateboards, around pools/spas, etc. Not recommended for automotive applications (exposure to gasoline, diesel fuel, windshield wash fluid).

NOMINAL VALUES

The following data are nominal values based on PSTC, ASTM and other standard tests. The data should not be considered as specifications.

Backing	4 mil (100B) PVC Film
Adhesive	Acrylic
Tensile Strength (lbs/in)	
MD	15 (7 kg/25mm)
CD	11 (5 kg/25mm)
Adhesion to Steel (oz/in) PSTC.101	80 (2.3 kg/25mm)
Shear Adhesion (hours) (1" x 1" @ 1kg)	>24
Operating Temperature Range	.14°F ~ +140°F (.25°C ~ +60°C)
Total Thicknes (mil) PSTC.133	6.3 (0.16mm)
Color	Black

ipg intertape polymer group®

100 Paramount Drive, Suite 300 | Sarasota, FL 34232 | USA
Customer Service: 800.IPG.8273 | 800.474.8273
Tape Technical Service: 877.447.4832
www.itape.com | info@itape.com



While we believe them to be reliable, the statements and information herein are only for general guidance and are not warrants or guarantees for accuracy and completeness. The user must, by test or otherwise, determine suitability for this purpose. There is no warranty of fitness for a particular purpose. Our standard term and conditions of sale apply exclusively to all orders, and all liability for damages of any kind, including consequential, exceeding purchase price is excluded. No one is authorized by us to make oral warranties. We reserve the right to make changes without notice or obligation in our products and publications.

EFFECTIVE: 9/11

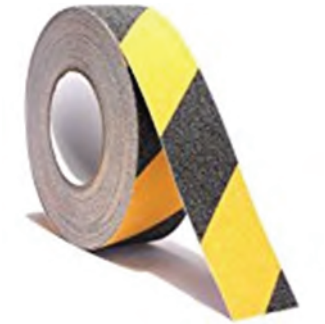

SAFETY YELLOW

TECHNICAL DATA

Project :
Wasterwaterplan upgrade
Iqaluit
IQA 29132-00

Dated : July 11, 2018

Submitted to:
Kudlik Construction
P.O. Box 727
1519 Federal Road
Iqaluit, NU X0A 0H0

Manufacturer :
Forbo

Contractor	Tapico Québec Inc.
Adress :	3260, avenue Watt Bureau 105 Québec (Québec) G1X 4T5
Phone:	418-659-4400
Project manager:	Maryse Arbour
Email:	marbour@tapico.ca

Drawing # :	1
Number of pages:	6

Description:

Marmoleum Piano
Adhesive M885

Professional verifiation

please choose color

Submitted product:	**Drawing issued for:**
☐ As specified	☐ Verification
☐ Equivalent	☐ Information
☐ Substitution	☐ Coordination
	☐ Reissue

Delivery time:

Drawing reference:

Specification reference: 09 65 16
2.1.14.1

Note:

MARMOLEUM® SHEET TECHNICAL DATA

(REAL, FRESCO, VIVACE, PIANO, STRIATO, GRAPHIC, CONCRETE, DUTCH DESIGN, OXYD, UNEXPECTED NATURE)

1. PRODUCT NAME / MANUFACTURER

1.1 Product:

Marmoleum® linoleum sheet resilient floor covering

1.2 Manufacturer:

Forbo Flooring Systems
Humboldt Industrial Park
Hazleton, PA 18202
www.forboflooringna.com
Phone: +800 842 7839
+570 459 0771
Fax: +570 450 0258

1.3 Product Description:

Construction: Marmoleum® is a homogeneous floor covering made from natural ingredients including linseed oil, rosin binders, wood flour, limestone and dry pigments which are mixed and then calendared onto a natural jute backing.

Topshield2™ is a high performance finish. Its double UV cured double layer technology delivers extraordinary performance and clear and vibrant colors that remain over time. Topshield2™ creates a 'ready to use' Marmoleum® that requires no initial maintenance or polymer application. The surface can be repaired or refreshed in cases of accidents or after years of intensive use.

1.4 Physical Characteristics: (dimensions are approximate)

Gauge----------1/10" (2.5 mm)
Backing----------Jute
Width----------79" (2 meters)
Length----------105' (32 meters)
Roll Size----------77 yards^2 (64 meters^2)

2. PRODUCT PERFORMANCE AND TECHNICAL DATA

2.1 Reference Specification:

Meets or exceeds all technical requirements as set forth in ASTM F 2034 Standard Specification for Linoleum Sheet Flooring, Type I

2.2 Environmental:

100% USDA Certified BioBased Product.

Compliant with CHPS 01350 requirements for VOC emissions and indoor air quality.

Contributes to the following LEED® v4 credits:
Materials & Resources
Credit 3: EPD available at
http://productguide.ulenvironment.com/QuickSearch.aspx
Credit 4, Option 1: See Forbo's LEED v4 sheet for additional information.
Credit 4, Option 2: Recycled Content (43% Pre-Consumer)
Credit 5: HPD available at www.forboflooringna.com
Prerequisite 2: 100% Recyclable Packaging
Indoor Environmental Quality
Credit 2: Low-Emitting Materials (www.chps.net)
Credit 2: Low-Emitting Materials (Adhesives comply with SCAQMD Rule #1168)

2.3 Flexibility

Marmoleum will not crack or break when bent around a 1.4" (3.5mm) diameter cylinder.

2.4 Static Load Limit:

850 pounds per square inch when tested in accordance with ASTM F 970-00, Standard Test Method for Static Load Limit.

2.5 Slip Resistance:

Meets or exceeds the industry recommendation of >0.5 for flat surfaces when tested in accordance with ASTM D 2047, Standard Test Method for Static Coefficient of Friction.

2.6 Castor Resistance:

Suitable for office chairs with castors when tested in accordance with EN 425, Castor Chair Test.

2.7 Impact Sound Reduction:

6db when tested in accordance with ISO 717-2, Impact Sound Insulation Test.

2.8 Resistance to Bacteria:

Provides a self-sanitizing quality in the form of a bactericidal effect. Independent testing has shown that a sterile zone around the material inhibits the growth of organisms such as staphylococcus aureus, Clostridium difficile, and Klebsiella pneumonia (CRE).

2.9 Anti-Static Properties:

Naturally anti-static. This property makes cleaning easier because dirt and dust does not cling to the surface as it may with other materials.

2.10 Fire Testing:

Class 1 when tested in accordance with ASTM E 648/NFPA 253, Standard Test Method for Critical Radiant Flux.

Meets 450 or less when tested in accordance with ASTM E 662/ NFPA 258, Standard Test Method for Smoke Density.

Class C when tested in accordance to ASTM E 84/NFPA 255, Standard Test Method for Surface Burning Characteristics.

FSR – 150; SDC – 145 when tested in accordance to CAN/ULC S102.2, Standard Test Method for Flame Spread Rating and Smoke Development.

2.11 Chemical Resistance: (Exposure Time: One Hour)*

Diluted Acids – Sulfuric, Nitric, Hydrochloric, Acetic, Lactic, Citric----------No Change
Isopropyl Alcohol (70%)----------No Change
Sodium Hydroxide (5%)----------Softening
Ammonia (5%), Acetone----------Possible Softening/Staining
Soda Solution, Soap Solution (Slightly Alkaline)----------No Change
Gasoline, Kerosene, White Spirit, Paraffin----------No Change
Benzene, Toluene, Methyl Alcohol, Ethyl Acetate ----No Change
Methyl Ethyl Ketone, Ether, Phenol (5%) ----------No Change
Mineral Oil, Olive Oil, Vegetable Oil, Animal Fat----------No Change
Blood, Urine, Excrement ---------- No Change
Formaldehyde, Hydrogen Peroxide 3% ----------No Change
Hot Chili Paste, Iodine, Betadine, Hair Dye----------No Change
Shoe Polish, Lipstick---------- Staining
Silver Nitrate---------- Staining/Possible Softening
Bitumen, Salt Water ----------No Change
Methylene Blue---------- Staining
Gel-Based Hand Sanitizer, Bleach ----------No Change

Tested in accordance with ASTM F 925, Standard Test Method Resistance to Chemicals of Resilient Flooring.

*Marmoleum® is NOT resistant to prolonged exposure to high alkalis.

2.13 Cigarette Resistance:

Resists cigarette burns. Burning cigarettes will leave only a brown mark, which can be rubbed out using steel wool or a scouring pad.

3. INSTALLATION

3.1 Site Conditions:

The installation should not begin until the work of all other trades has been completed, especially overhead trades. Areas to receive flooring should be clean, fully enclosed and weathertight with the permanent HVAC must be fully operational, controlled and set at a minimum of 68° F (20° C) for a minimum of seven days prior to, during, and seven days after the installation. The flooring material (including adhesive and welding rod) should be conditioned in the same manner for a minimum of 48 hours prior to the installation. Areas to receive flooring shall be adequately lighted to allow for proper inspection of the substrate, installation and seaming of the flooring, and for final inspection.

3.2 Substrates:

Floors shall be sound, smooth, flat, permanently dry, clean, and free of all foreign materials including, but not limited to, dust, paint, grease, oils, solvents, curing and hardening compounds, sealers, asphalt and old adhesive residue. Wood floors should be double construction with a minimum total thickness of 1". Wood floors must be rigid, free from movement and have at least 18" of well-ventilated air space below. Forbo floor coverings should not be installed over wooden subfloors built on sleepers over on or below grade concrete floors without first making sure that adequate precautions have been taken to ensure the structural integrity of the system, and to prevent moisture migration from the concrete slab. Concrete substrates should be prepared in accordance with the latest version of ASTM F 710, Standard Practice for Preparing Concrete Floors to Receive Resilient Flooring. Concrete shall have a minimum compressive strength of 3,000 psi. Patch and repair minor cracks and other imperfections using only the highest quality patching and leveling compounds in strict accordance to the manufacturer's recommendations for their use and application. Floor covering should not be installed over expansion joints. Suitable expansion joint covers should be used. It is essential that moisture tests be conducted on all concrete floors regardless of the age or grade level. Conduct calcium chloride tests in accordance with the latest version of ASTM F 1869, Standard Test Method for Measuring Moisture Vapor Emission Rate of Concrete Subfloor Using Anhydrous Calcium Chloride. Measure the internal relative humidity of the concrete slab in accordance with the latest version of ASTM F 2170, Standard Test Method for Determining Relative Humidity in Concrete Floor Slabs Using in situ Probes. One test of each type should be conducted for every 1,000 square feet of flooring (minimum of 3). The tests should be conducted around the perimeter of the room, at columns, and anywhere moisture may be evident. Concrete moisture vapor emissions must not exceed 8.0 lbs. per 1,000 square feet in 24 hours when using Forbo L 885 adhesive or Forbo Sustain 885m adhesive or 10.0 lbs. per 1,000 square feet in 24 hours when using Forbo Sustain 1195 adhesive. Concrete internal relative humidity must not exceed 85% when using Forbo L 885 adhesive or Forbo Sustain 885m adhesive or 95% when using Forbo Sustain 1195 adhesive. A diagram of the area showing the location and results of each test should be submitted to the Architect, General Contractor or End User. If the test results exceed these limitations, the installation must not proceed until the problem has been corrected.

Note: Moisture tests indicate conditions at the time of the test only. The absence of an acceptable vapor retarder under the slab, changes in the environment, or other circumstances beyond Forbo's control, may lead to adverse changes in the moisture condition of the concrete. Forbo's warranty shall not be extended to cover damage or failures caused by moisture conditions in excess of specified limits that occur after the time of initial testing or installation.

3.3 Adhesive:

Use Forbo L 885, Forbo Sustain 885m or Forbo Sustain 1195 adhesive.
Use a 1/16" x 1/16" x 1/16" square notch trowel.
Spread Rate: Approximately 125 square feet/gallon.

3.4 Heat Welding:

Heat welding is not necessary for all installations, however it is optional. For seamless, hygienic watertight installation requirements, use Forbo Marmoweld welding rod.
Welding rod dimensions: 4 mm; 165 linear feet per spool.

3.5 Flash Coving (OPTIONAL):

Flash cove up walls to the desired height. Use Forbo L 885 adhesive, Forbo Sustain 885m adhesive or Forbo Sustain 1195 adhesive.

3.6 Installation Guidelines:

Refer to Forbo Flooring's Installation Guide for complete installation guidelines.

4. AVAILABILITY AND COST

Available through authorized Forbo Flooring suppliers throughout North America. Contact Forbo Flooring or an authorized supplier for cost information.

5. WARRANTY

Limited 5-year warranty. For complete details, contact Forbo Flooring.

6. CARE AND CLEANING

After installation is completed, allow a minimum of 5 days for the adhesive to properly bond and cure before conducting wet cleaning procedures. See Forbo Flooring's Floor Care Guide for additional information.

7. SUPPORT SERVICES

Submittal samples for verification and approval are available upon request from Forbo Flooring. Samples shall be submitted in compliance with the requirements of the Contract Documents. Please fax all sample requests to +570 450 0229 or visit our website at www.forboflooringna.com. Accepted and approved samples shall constitute the standard materials that represent materials installed in the project.

For current installation and floor care guidelines, guide specifications, and other technical information, visit our website at www.forboflooringna.com.



marmoleum®

piano

with topshield²

- 20 sophisticated colors featuring a two-tone speckle effect
- USDA Certified 100% biobased content
- Naturally phthalate and plasticizer free
- Contributes to LEED® credits
- 30-year system service life
- Carbon neutral

USDA CERTIFIED BIOBASED PRODUCT

Produced CO_2 neutral

3629 | frosty grey

3650 | polar bear

3648 | sunray

3634 | meadow

3644 | nordic blue

3601 | warm grey

3630 | angora

3622 | mellow yellow

3646 | young grass

3642 | periwinkle

3607 | grey dusk

3631 | otter

3651 | zinnia

3647 | nettle green

3645 | neptune blue

3613 | almost darkness

3632 | sealion

3625 | salsa red

3649 | greenwood

3652 | atlantic blue

creating better environments

sustain (sə-'stān)

FLOORING SYSTEMS

FORBO SUSTAIN 885m ADHESIVE TECHNICAL DATA

RECOMMENDED FOR USE WITH:

- Marmoleum® Sheet, Walton, Marmoleum® Decibel, Marmoleum® Composition Sheet (MCS), Marmoleum® Sport
- Corkment Underlayment
- Marmoleum® Modular, Marmoleum® Composition Tile (MCT)
- Flotex® Sheet
- Allura
- Flotex® Tile and Allura Flex (permanent applications)

SPECIFICATIONS:

- SCS-Certified 25% Post-Consumer Recycled Content (PCC)
- Cradle to Cradle Certified™ at the Gold level.
  Cradle to Cradle Certified™ products are evaluated for material health, material reutilization, renewable energy use and carbon management, water stewardship, and social fairness. For more information visit www.c2ccertified.org.
- Packaged in biodegradable plastic pails
- FloorScore Certified by SCS Global Services
- Dual Acrylic Polymer
- Contains MicroSept™ anti-microbial protection
- Not flammable; 100% Solvent free
- Storage: Freeze-thaw stable: 1 cycle at 20° F (-6 ° C). If the pail is opened and found to be frozen, let it set closed and undisturbed at room temperature until thawed. **DO NOT** try to mix frozen adhesive.
- Shelf life: 2 years in unopened container
- Appearance and Odor: Grey paste with little or no odor
- VOC Emissions: 0 grams per liter (calculated per CA South Coast Rule 1168)
- Spread Rate: Approximately 125 square feet per gallon
- Available in one and four gallon units

INSTALLATION RECOMMENDATIONS:

Recommended Substrates: All grade levels of concrete, approved suspended wood floors and approved existing resilient floors. The substrate must be dry, clean, smooth, and structurally sound. For concrete substrates, the moisture vapor emission rate must not exceed 8.0 lbs. per 1,000 square feet in 24 hours as determined by testing conducted in strict accordance with the latest version of ASTM F 1869. The internal relative humidity must not exceed 85% as determined by testing conducted in strict accordance with the latest version of ASTM F 2170. The surface pH of concrete slabs must not exceed a pH of 10. Concrete substrates with pH readings less than 7.0 or above 10.0 will require remediation prior to installation.

1. Areas to receive material should be clean, fully enclosed and weather tight. The permanent HVAC should be fully operational and controlled and set at a minimum temperature 65° F (18.3° C). If this is not possible, the areas should be acclimated and controlled by means of temporary HVAC to the service level conditions expected during occupancy. The temperature and humidity should range from 75° F ± 10° F (23.9° C ± 5.5° C) with a 50% ± 10% ambient relative humidity. These conditions **MUST** be established at least seven days prior to beginning the installation, maintained during the installation, and continued for at least seven days following the installation.
2. The substrate must be free of all foreign materials including, but not limited to, dust, solvent, paint, wax, oil, grease, residual adhesive, adhesive removers, film-forming curing compounds, silicate penetrating curing compounds, sealing, hardening, or parting compounds, alkaline salts, excessive carbonation or laitance, mold, mildew, and other foreign materials that might affect the rate of moisture dissipation from the concrete, the adhesion of resilient flooring to the concrete or cause a discoloration of the flooring from below.
3. Always conduct adhesive mat bond tests before beginning the installation. Bond testing will aid in identifying both the working characteristics of the adhesive, such as the appropriate open and working times for the site conditions, and also any potential bonding problems to the substrate.
4. Trowel recommendation: 1/16" x 1/16" x 1/16" square notch trowel. Replace the trowel when proper coverage is no longer attainable.
5. The open time and working time of adhesives will vary depending on site conditions such as ambient temperature and humidity, the porosity of the substrate and air circulation. A general indication of proper open time is when a light touch produces transfer of adhesive to the finger, but a firm touch will flatten and "smear" the adhesive.

FORBO SUSTAIN 885m ADHESIVE TECHNICAL DATA

6. **FORBO SHEET PRODUCTS:** Install one sheet at a time. The flooring material must remain in contact with the adhesive while the adhesive is drying and curing. In order to ensure continuous contact of the material and the adhesive, all material must be rolled repeatedly during installation. When installing Marmoleum® sheet, the natural "roll curl" at the end of each cut of Marmoleum® must be addressed by massaging to remove the tension caused by being rolled. Adequate massaging should enable the material to remain in contact with the adhesive but, if necessary, weight should be applied to ensure that the flooring material remains in full contact with the adhesive while the adhesive is drying. Proper placement and rolling will result in a complete "explosion" of the trowel ridges, creating a continuous flat film of adhesive on the substrate and on the material backing.
7. **MARMOLEUM® MODULAR, MCT & FORBO TILE PRODUCTS:** A short open time will be necessary. The flooring material must remain in contact with the adhesive while the adhesive is drying and curing. Proper placement and rolling will result in a complete "explosion" of the trowel ridges, creating a continuous flat film of adhesive on the substrate and on the material backing, with no trace of trowel marks or ridges. When dry, complete transfer of the tile backing will appear in the surface of the adhesive with no visible trowel marks.
8. Check for adhesive transfer frequently; there must be a ***100% wet transfer*** of adhesive to the material backing in order to achieve a secure bond.
9. Immediately roll the flooring in all directions using a 100 pound roller to ensure proper adhesive transfer. Additional rolling is required during adhesive setup to ensure that the material is flat and fully adhered.
10. Remove fresh adhesive residue immediately with a clean white cloth. Dried adhesive can be removed with a clean white cloth and a properly diluted solution of neutral pH cleaner or with Forbo Adhesive Remover. The area must then be rinsed with clean, cool water to remove all residue from the floor. Refer to the Forbo Commercial Floor Care Guide for further information.
11. Keep the lid on the pail when not in use.
12. Do not allow heavy traffic or rolling loads for a minimum of 72 hours following the installation. Additional time may be necessary if the installation is over a non-porous substrate.
13. In order to allow the adhesive to dry and cure properly, wait a minimum of five days following the installation before conducting wet cleaning procedures or initial maintenance. Additional time may be necessary if the installation is over a non-porous substrate.

For additional information, Forbo's Installation and Floor Care Guidelines are available for download at www.forboflooringNA.com, or contact Forbo's Product Support & Education Services at +800 842 7839.

TECHNICAL DATA

Project :
Wasterwaterplan upgrade
Iqaluit
IQA 29132-00

Dated : July 11, 2018

Submitted to:
Kudlik Construction
P.O. Box 727
1519 Federal Road
Iqaluit, NU X0A 0H0

Manufacturer :
Polyflor

Contractor Tapico Québec Inc.
Adress : 3260, avenue Watt
Bureau 105
Québec (Québec) G1X 4T5
Phone: 418-659-4400
Project manager: Maryse Arbour
Email: marbour@tapico.ca

Drawing # : 2
Number of pages: 7

Description:

Polysafe Verona Pur
Adhesive G19 from Mapei

Professional verifiation

please choose color

Submitted product:	**Drawing issued for:**
☑ As specified	☐ Verification
☐ Equivalent	☐ Information
☐ Substitution	☐ Coordination
	☐ Reissue

Delivery time:

Drawing reference:

Specification reference: 09 65 16
2.2.8.1

Note:

Polysafe™ Verona

Polysafe Verona PUR is ideal for use in areas where contaminant spillages can occur, making slip resistance an important consideration. Typical areas include circulation areas and corridors, dining areas and cafes, classrooms, hospital wards, clinics, laundry and sluice rooms, nursing homes, washrooms, WCs, bar serveries, food preparation areas, canteens and institutional applications. For continually wet areas please refer to our Polysafe Hydro, Hydro Evolve or Ultima ranges.



PRODUCT SPECIFICATION

- The flooring shall be Polysafe Verona PUR, as manufactured by Polyflor Ltd. of Manchester, England.
- The flooring shall be flexible PVC sheet flooring in 2.0mm thickness, and will contain coloured quartz and natural recycled aggregates to impart enhanced slip resistance.
- The flooring shall feature a high quality, cross-linked polyurethane reinforcement to provide superior cleaning benefits, life cycle maintenance savings and optimum appearance retention.
- The flooring shall be manufactured by spreading liquid PVC onto a random glass fibre carrier sheet in one operation. The glass fibre carrier sheet shall be fully encapsulated in PVC.

- The flooring material shall fully conform with the European Norm for safety flooring - EN 13845.
- In respect of flamespread, the flooring shall be certified as Class Bfl-S1 according to EN 13501-1. The flooring shall have been fully tested to ASTM E648 by an independent test house and have a Class 1 rating, making it suitable for use in institutional, commercial and public buildings.
- The flooring must have been fully tested by an independent test house to the RRL Pendulum Test (4S Rubber/Slider 96) and have typical results of ≥36 in the wet, with a surface roughness of Rz ≥20µm, making it suitable for areas where enhanced slip resistance is required.
- The product must have been fully tested for abrasion resistance to EN 13845, passing the 50,000 cycles test and also meeting EN 660-2 Abrasion Group T.
- The flooring shall possess a valid Agrément certificate when laid in accordance with the instructions of Polyflor, with coved skirtings and welded joints.
- This product does not accumulate static charges above 2kV and is classified as 'antistatic' when tested to EN 1815. For specialist applications where there is a requirement to dissipate the electrostatic charge, see the Polyflor ESD product ranges.
- The flooring must be available in 2.0 metre width, to minimise the number of joints.
- The flooring must be suitable for Use Area Classification 23/34/43, as defined in EN ISO 10874 (EN 685).
- In respect of light fastness, the flooring shall have been fully tested to ISO 105-B02 Method 3 and obtain ≥6.

- The flooring will achieve a BRE Global Generic Environmental A+ rating in the Green Guide to Specification in major use areas such as education and healthcare.
- Generic EN 15804 Environmental Product Declaration (EPD) available on request.
- The manufacturer should provide a facility to take back and recycle waste vinyl flooring material through the Recofloor scheme.
- The flooring shall be tested to and pass key independent, international standards for low VOC emissions.

- The manufacturer of the floorcovering must be in possession of a valid quality systems certificate, showing compliance with BS EN ISO 9001.
- The manufacturer of the floorcovering must be in possession of a valid environmental certificate, showing compliance with ISO 14001.

- A moisture test must be carried out, to ensure that the subfloor has dried out to a level consistent with the application of vinyl flooring. The test should be carried out using a hygrometer, in accordance with the instructions in BS 8203. The result should not exceed 75%RH, once equilibrium has been achieved.
- The adhesive used must be approved by Polyflor, to ensure full product compatibility.
- Products must be fully conditioned to the environment in which they are to be installed, as outlined by Polyflor.
- Installation must be carried out in accordance with BS 8203 and the instructions of Polyflor.
- All joints must be welded to produce hygienic, continuous floors.
- Suitable for use with underfloor heating up to 27°C. See Polyflor Technical Information Manual for details.

- Polysafe Verona PUR is ideal for use in areas where contaminant spillages can occur, making slip resistance an important consideration. Typical areas include circulation areas and corridors, dining areas and cafes, classrooms, hospital wards, clinics, laundry and sluice rooms, nursing homes, washrooms, WCs, bar serveries, food preparation areas, kitchens, canteens and institutional applications. For continually wet areas please refer to our Polysafe Hydro, Hydro Evolve or Ultima ranges.
- The slip resistance across all Polysafe products is assured throughout the guaranteed life of the product, with strict adherence to HSE Guidelines. As with all Polysafe products, Polysafe Verona PUR should not have a polish applied.

- Polysafe safety flooring ranges are compatible for use with the most commonly used alco-based hand gels and are suitable for steam cleaning on a periodic basis. For clarification and for information regarding handling and installation, adhesives, maintenance, applications, chemical resistance and product warranty, consult **Polyflor Customer Technical Services on +44 (0)161 767 1912, or email tech@polyflor.com.**
- At the date of issue the data presented is correct. However, Polyflor Ltd. reserves the right to make changes which do not adversely affect performance or quality.

100% RECYCLABLE
CONTAINS RECYCLED MATERIAL

BRE ENP 472 ENVIRONMENTAL RATING

EPD

Recofloor™ Vinyl Take-Back Scheme

POLYSAFE PUR OPTIMUM APPEARANCE

UP TO 60% MAINTENANCE COST SAVING

BES 6001 Responsible Sourcing

floorscore

BBA BRITISH BOARD OF AGREEMENT

BIM

NBS Plus

SGS

SGS

CE
EN 14041

POLYFLOR™ COVERING THE WORLD

UK Sales Direct: +44 (0)161 767 1122 | Export Sales Direct: +44 (0)161 767 1913
Sample Requests: +44 (0)161 767 2551 | email: info@polyflor.com | **www.polyflor.com**

James Halstead™ FLOORING

Jun 2017

POLYFLOR™
COVERING THE WORLD

Polysafe™ Verona

SAFETY FLOORING

choose color



Cookie Cream **5201** w/r 5201
NCS S 1502-Y LRV 64.0



Biscotti **5212** w/r 5212
NCS S 3005-Y20R LRV 44.7

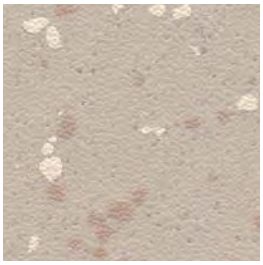

Marshmallow **5214** w/r 5214
NCS S 3005-Y50R LRV 44.9



Caramel Latte **5213** LRV 33.6
NCS S 3010-Y40R w/r 5213

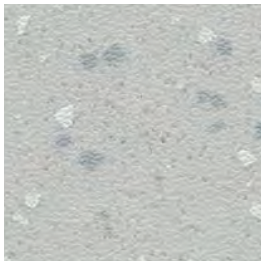

Rainstorm **5202** w/r 5202
NCS S 2502-G LRV 44.4

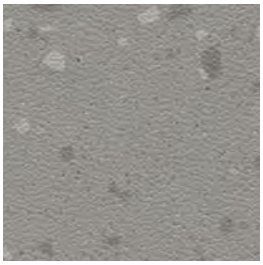

Dolphin Grey **5203** w/r 5203
NCS S 4500-N LRV 25.8

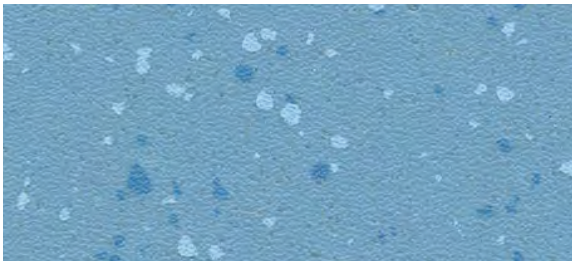

Blue Lagoon **5206** w/r 5206
NCS S 2030-R90B LRV 31.9

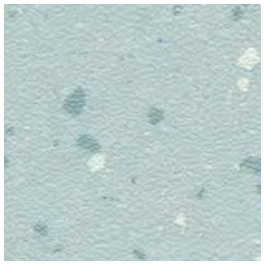

Freshmint **5209** w/r 5209
NCS S 2010-B30G LRV 51.7

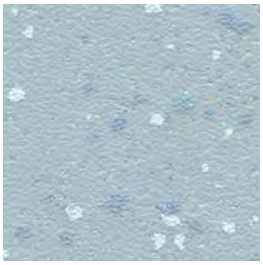

Skyline **5205** w/r 5205
NCS S 2010-B LRV 47.0

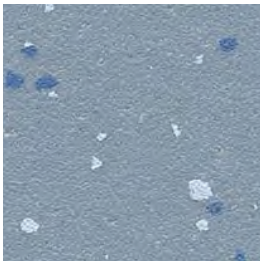

Horizon Blue **5208** w/r 5208
NCS S 3020-R90B LRV 30.5

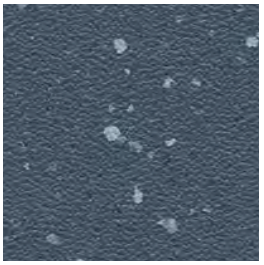

Nightfall **5207** w/r 5207
NCS S 6010-R90B LRV 12.3

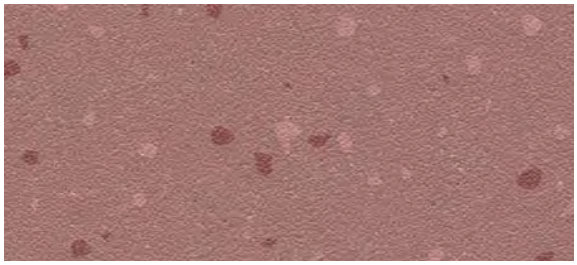

Summer Coulis **5217** w/r 5217
NCS S 4020-Y90R LRV 20.9



Oregano **5210** w/r 5210
NCS S 2005-G70Y LRV 48.3

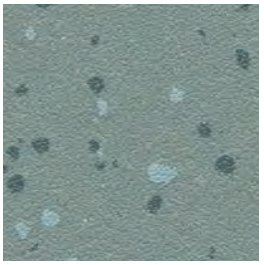

Seagrass **5211** w/r 5211
NCS S 4010-B50G LRV 25.2



Soft Peach **5216** w/r 5216
NCS S 1515-Y60R LRV 47.0



Butterscotch **5218** w/r 5218
NCS S 2030-Y30R LRV 35.2

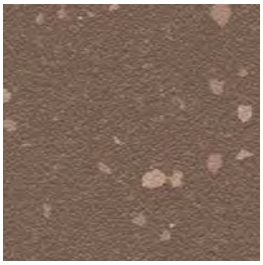

Chocolate Chip **5215** w/r 5215
NCS S 6005-Y50R LRV 15.8

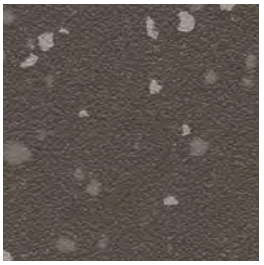

Café Noir **5204** w/r 5204
NCS S 7000-N LRV 11.2

w/r = weld rod **NCS** = Natural Colour System **LRV** = Light Reflectance Value

100% RECYCLABLE
CONTAINS RECYCLED MATERIAL

A+ BRE° ENP 472 ENVIRONMENTAL RATING

POLYSAFE PUR OPTIMUM APPEARANCE

36+ **Sustainable Slip Resistance** throughout product's guaranteed life
RRL Pendulum Wet Test - HSE Compliant

° Refer to BRE Global ratings on www.greenbooklive.com

Version: Sept. 28, 2011

MAPEI®

Ultrabond® G19

Professional Two-Part Urethane Flooring Adhesive



GREEN INNOVATION

DESCRIPTION

Ultrabond G19 is a two-part reactive adhesive specially designed for installation of floor coverings that demand a high-performance adhesive, such as sports flooring. *Ultrabond G19* is excellent for high-performance indoor/outdoor installations of all types of floor coverings that demand reliable results in various weather conditions. This adhesive aggressively adheres all types of floor coverings to properly prepared metal, and many other difficult-to-bond-to substrates. It is recommended for the installation of homogenous PVC, solid vinyl tile and planks, rubber sheet flooring, rubber tile (including radial rubber tile), rubber stair treads, wood parquet floors, vinyl composition tile (VCT), artificial-grass indoor/outdoor carpet, linoleum, mineral fibrous felt-backed sheet goods, carpet, and all types of cork flooring and underlayments.

FEATURES AND BENEFITS

- Outstanding adhesion in heavy and extra heavy traffic areas
- Resistant to high and low temperatures
- Interior and exterior use

INDUSTRY STANDARDS AND APPROVALS

- RFCI IP #1 – Recommended Installation Practice for Homogeneous Sheet Flooring, Fully Adhered
- RFCI IP #2 – Recommended Installation Practice for Vinyl Composition Tile
- RFCI's Recommended Work Practices for Removal of Resilient Floor Coverings

LEED Points Contribution	LEED Points
MR Credit 5, Regional Materials*	Up to 2 points
IEQ Credit 4.1, Low-Emitting Materials – Adhesives & Sealants	1 point

* *Using this product may help contribute to LEED certification of projects in the categories shown above. Points are awarded based on contributions of all project materials.*

WHERE TO USE

- Interior and exterior residential (rental apartments, condominiums, etc.)
- Interior and exterior commercial (office buildings, cafeterias)
- Interior and exterior heavy commercial (shopping malls, grocery stores, department stores)
- Interior and exterior institutional (hospitals, schools, universities, libraries, government buildings)

LIMITATIONS

- Do not install over any substrates containing asbestos.
- Do not install when the moisture vapor emission rate (MVER) exceeds 5 lbs. per 1,000 sq. ft. (2,27 kg per 92,9 m^2) per 24 hours, when using the anhydrous calcium chloride test (ASTM F1869).
- Do not install when the relative humidity of concrete slabs exceeds 80% (ASTM F2170).
- Use only when the substrate temperature is between 50°F and 90°F (10°C and 32°C), and when the ambient relative humidity is below 65%.

Ultrabond® G19

SUITABLE SUBSTRATES

- Exterior-grade plywood, Group 1, CC type
- Other approved wood underlayments (per manufacturer recommendations)
- Concrete and properly prepared cement terrazzo
- Cement-based self-leveling underlayments and patching compounds
- Embossing levelers applied over existing, properly prepared and fully bonded ceramic tile
- A single layer of properly prepared, fully bonded VCT
- Properly prepared and primed gypsum underlayments that meet the requirements for compressive strength according to ASTM F2419
- Asphaltic surfaces that are sound and free from contamination

Consult MAPEI's Technical Services Department for installation recommendations regarding substrates and conditions not listed.

SURFACE PREPARATION

- All substrates must be structurally sound, dry, solid and stable.
- Substrate should be clean and free of dust, dirt, oil, grease, paint, curing agents, concrete sealers, loosely bonded toppings, loose particles, old adhesive residues, and any other substance or condition that may prevent or reduce adhesion. All surfaces must be level, even, flat and smooth.
- Concrete and cement-based underlayments and patches must be fully cured and free of any hydrostatic and/or moisture problems.
- Use anhydrous calcium chloride tests to determine MVER according to ASTM F1869.
- Concrete slabs exceeding 5 lbs. (2,27 kg) in MVER should be treated with a moisture vapor reduction product. Refer to Technical Data Sheets at www.mapei.com for information on these products.
- Use a moisture meter to check the relative humidity of the flooring, substrate surface and general jobsite area. Follow the flooring manufacturer's guidelines.
- Refer to MAPEI's "Surface Preparation Requirements" document for floor-covering installation systems at www.mapei.com.

MIXING

Note: Choose all appropriate safety equipment before use. Refer to Material Safety Data Sheet (MSDS) for more information.

- Wear rubber gloves and avoid skin contact during mixing, application and cleaning.
- Parts A and B are packaged to exact quantity ratios for maximum performance.
- Protect flooring from adhesive spills.
- Pour all material out of the Part B (liquid) container into Part A (paste). Place the cap back on the Part B container and turn the container upside-down to ensure that all remaining material drains into the cap. Pour the remaining material into Part A. Always mix complete units. Do not add other materials to this mixture.
- Use a low-speed mixer to ensure that the material is mixed thoroughly to a smooth, homogenous paste consistency (generally within 3 minutes). Do not allow the mixed product to sit in the container. Immediately after mixing, apply the adhesive to the substrate.
- Wash all tools with mineral spirits immediately after mixing. Once cured, *Ultrabond G19* can be removed only by mechanical means.

PRODUCT APPLICATION

1. Use a typical notched trowel (see "Product Performance Properties" section) and consult the floor-covering manufacturer's recommendation regarding the proper trowel to use, ensuring 100% coverage of the flooring material's backing.
2. Do not spread more adhesive than can be covered with floor covering within 40 minutes. After spreading the adhesive, immediately install the flooring material into the adhesive while it is still fresh. Periodically lift the material to confirm proper adhesive transfer to the backing.

   Note: The floor temperature directly affects setting time. The warmer it gets, the faster it sets; the cooler it gets, the slower it sets.
3. Roll the flooring surface across the width and length with the manufacturer's recommended roller to break down adhesive ridges and to ensure complete removal of trapped air. Pull (rather than push) the roller, so that footprints are not left on the floor.
4. Complete the installation per the flooring manufacturer's instructions.
5. Because the initial grab of *Ultrabond G19* is low, it is sometimes necessary to apply weights, particularly at the seams, to maintain contact until the adhesive sets.

CLEANUP

While the adhesive is still fresh, promptly use mineral spirits to clean adhesive smudges from the flooring material's surface and the tools. Once cured, the adhesive can only be removed by mechanical means.

PROTECTION

Do not walk on the flooring until 12 hours after the installation. If walking on the floor is necessary before this time, lay plywood boards across the floor to disperse the load. Movement of the flooring while the adhesive is setting may affect the bond. Do not allow heavy traffic until 36 hours after the installation.

MAPEI®

Ultrabond® G19

Product Performance Properties

Laboratory Tests	Results
Polymer type	Epoxy modified polyurethane
Percent solids	90% to 100%
VOCs (Rule #1168 of California's SCAQMD)	38 g/L
Pot life	50 minutes
Trowelability	Light, easy
Density	11.7 +/- 0.8 lbs. per U.S. gal. (1,40 +/- 0,1 g per mL)
Consistency	Creamy
Color	Off-white
Shelf life	2 years when stored in original packaging at 73°F (23°C)
Storage conditions	40°F to 100°F (4°C to 38°C)
Flash point	Part A: 104°F (40°C) Part B: 59°F (15°C)
Protect from traffic	16 hours for light traffic, 36 hours for heavy traffic

Protect containers from freezing in transit and storage. Provide for heated storage on site and deliver all materials at least 24 hours before work begins.

Application Table

Application Characteristics		
	Flash†	Working Time††
All flooring types	0 minutes	60 minutes

† *Flash is the waiting time required before installing flooring.*

†† *Working time is the window of time for the adhesive to accept flooring.*

Note: Flash time and working times may vary based on temperature, humidity, substrate porosity, trowel size and jobsite conditions.

Packaging

Product Code	Size
Canada 3050006	Kit: 1 U.S. gal. (3,79 L)
3050007	Kit: 2 U.S. gals. (7,57 L)

Approximate Product Coverage*

Flooring Type	Typical Trowel	Coverage*
Solid vinyl sheet, tile and plank; vinyl composition tile	1/32" x 1/16" x 1/32 (1 x 1,5 x 1 mm) 	185 to 245 sq. ft. per U.S. gal. (4,53 to 6,0 m² per L)
Rubber flooring, linoleum, cork flooring	1/16" x 1/16" x 1/16" (1,5 x 1,5 x 1,5 mm) 	125 to 185 sq. ft. per U.S. gal. (3,06 to 4,53 m² per L)
Wood parquet	1/8" x 1/8" x 1/8" (3 x 3 x 3 mm) 	40 to 50 sq. ft. per U.S. gal. (0,98 to 1,22 m² per L)
Rough-backed carpet, reground rubber flooring, sport floors	3/32" x 3/32" x 3/32" (2,5 x 2,5 x 2,5 mm) 	70 to 80 sq. ft. per U.S. gal. (1,71 to 1,96 m² per L)

* *Trowel dimensions are depth/width/space. Coverages shown are for estimating purposes only. Actual jobsite coverages may vary according to substrate conditions, type of trowel used and setting practices.*

MAPEI®

Ultrabond G19



RELATED DOCUMENTS

Reference Guide: Surface Preparation Requirements for floor-covering installation systems	RGF0409*

* *At www.mapei.com.*

Refer to MAPEI's MSDS for specific data related to VOCs, health and safety, and handling of product.

STATEMENT OF RESPONSIBILITY

Before using, user shall determine the suitability of the product for its intended use and user alone assumes all risks and liability whatsoever in connection therewith. **ANY CLAIM SHALL BE DEEMED WAIVED UNLESS MADE IN WRITING TO US WITHIN FIFTEEN (15) DAYS FROM DATE IT WAS, OR REASONABLY SHOULD HAVE BEEN, DISCOVERED.**

We proudly support the following industry organizations:

MAPEI Headquarters of the Americas
1144 East Newport Center Drive
Deerfield Beach, Florida 33442
Phone: 1-888-US-MAPEI
(1-888-876-2734)

Technical Services
1-800-992-6273 (U.S. and Puerto Rico)
1-800-361-9309 (Canada)

Customer Service
1-800-42-MAPEI (1-800-426-2734)

Services in Mexico
0-1-800-MX-MAPEI (0-1-800-696-2734)

Edition Date September 21, 2011

PR231 G19D_I11Evp © 2011 MAPEI Corporation.
All Rights Reserved. Printed in the USA.

For the most current BEST-BACKED™ product data and warranty information, visit www.mapei.com.

TECHNICAL DATA

Project :
Wasterwaterplan upgrade
Iqaluit
IQA 29132-00

Dated : July 11, 2018

Submitted to:
Kudlik Construction
P.O. Box 727
1519 Federal Road
Iqaluit, NU X0A 0H0

Manufacturer :
BASF

Contractor Tapico Québec Inc.
Adress : 3260, avenue Watt
Bureau 105
Québec (Québec) G1X 4T5
Phone: 418-659-4400
Project manager: Maryse Arbour
Email: marbour@tapico.ca

Drawing # : 4
Number of pages: 2

Description:

Ardex Feather finis

Subfloor preparation

Professional verifiation

Submitted product:	**Drawing issued for:**
☑ As specified	☐ Verification
☐ Equivalent	☐ Information
☐ Substitution	☐ Coordination
	☐ Reissue

Delivery time:

Drawing reference:

Specification reference: 09 65 16
2.4.3

Note:

ARDEX FEATHER FINISH®

Self-Drying, Cement-Based Finish Underlayment

SUBSTRATE PREPARATION

ARDEX FEATHER FINISH mixes to a creamy, smooth finish underlayment that eliminates flooring installation problems associated with disbonding, crumbling, mold, mildew and staining. ARDEX FEATHER FINISH may be used as an embossing filler when mixed with ARDEX P 82™ Ultra Prime.

Install over: concrete, masonry, wood, terrazzo, and ceramic and quarry tile - as well as properly prepared residues of cutback and other non-water-soluble adhesives on concrete - all without the need for priming or the use of a latex additive



Key Features

- **Blend of hydraulic and other cements**
- **Self-drying matrix**
- **Mixes with water only**
- **Trowelable**
- **Mold and mildew resistant**
- **Interior use**

Installation

- **General priming recommendations:**
  - Porous surfaces: No priming required
  - Most non-porous surfaces (epoxy coating systems, metal and concrete treated with silicate compounds) must be primed with ARDEX P 82™ Ultra Prime
  - Gypsum underlayment - Use ARDEX P 51™ Primer
- **Packaging:** 10 lb. (4.5 kg)
- **Coverage:** Up to 300 sq. ft. per bag (27.9 m^2)
- **Thickness:**
  - True Featheredge
  - 1/2 in. (13 mm) over large areas
  - Any depth in small areas
- **Pot life:** 20 minutes (may be retempered)
- **Install floor coverings:** 15 minutes





Performance

- **VOC:** 0

MADE IN THE USA

ARDEX AMERICAS
888-512-7339
+1-724-203-5000
www.ardexamericas.com

TECHNICAL DATA

Project :
Wasterwaterplan upgrade
Iqaluit
IQA 29132-00

Dated : July 11, 2018

Submitted to:
Kudlik Construction
P.O. Box 727
1519 Federal Road
Iqaluit, NU X0A 0H0

Manufacturer :
SCHLUTER

Contractor Tapico Québec Inc.
Adress : 3260, avenue Watt
Bureau 105
Québec (Québec) G1X 4T5
Phone: 418-659-4400
Project manager: Maryse Arbour
Email: marbour@tapico.ca

Drawing # : 5
Number of pages: 4

Description:

Transition floor Reno-U

It's not possible to use the Reno-V, because the small one is 8mm height and the material is 2.5mm high. The transition Reno-U is possible to have 3.5mm hight.

Professional verifiation

Reno-U is acceptable

Submitted product:	**Drawing issued for:**
☑ As specified	☐ Verification
☐ Equivalent	☐ Information
☐ Substitution	☐ Coordination
	☐ Reissue

Delivery time:

Drawing reference:

Specification reference: 09 65 16
2.4.6

Note:

Schluter® Systems

PROFILE OF INNOVATION

FLOOR PROFILES



INNOVATIVE SOLUTIONS FOR CERAMIC AND STONE TILE

FINISHING, EDGE PROTECTION, AND TRANSITIONS

Because ceramic and stone tiles are inherently brittle, their exposed edges can chip and crack if left unprotected. Transitions between floor surfaces and at thresholds are particularly vulnerable to damage. Schluter-Systems offers a variety of profiles to provide edge protection and transitioning at thresholds and between adjacent surfaces, resulting in durable, maintenance-free tiled coverings. The profiles can be grouped into two categories: transitions between same-height surfaces and transitions between different-height surfaces.

Application and Function

Same-height Transitions

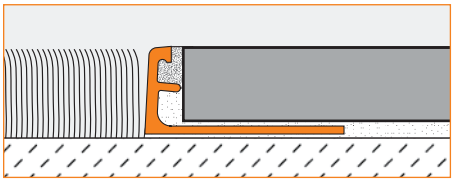

1.1 Schluter®-SCHIENE is designed to provide edging for tile coverings. Typical applications include edge protection where tile is bordered by carpet, at expansion joints, or as a decorative edging for stairs. SCHIENE is available in stainless steel, solid brass, aluminum, and anodized aluminum. The profile features a trapezoid-perforated anchoring leg, which is secured in the mortar bond coat beneath the tile, and an 87° sloped vertical wall section that transfers point loads to the substrate and surface covering while protecting tile edges from damage. SCHIENE, in solid brass, aluminum, and anodized aluminum, features a 5° sloped top flange and fillet at the anchoring leg/vertical section interface to enhance edge protection by reducing



1.1 Schluter®-SCHIENE

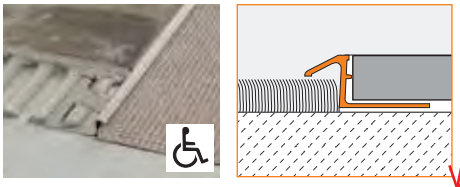

1.4 Schluter®-RENO-TK

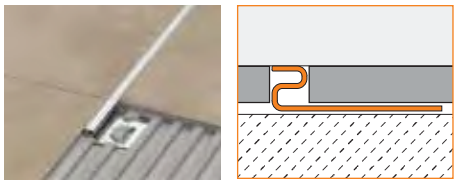

1.6 Schluter®-DECO

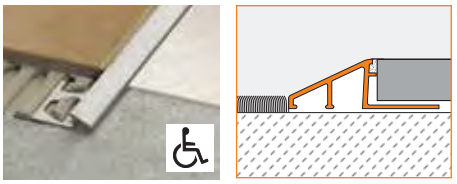

1.2 Schluter®-RENO-U

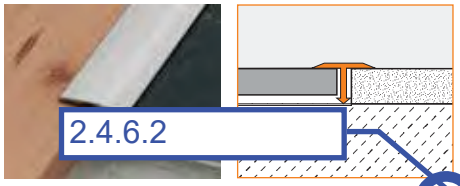

1.3 Schluter®-RENO-T

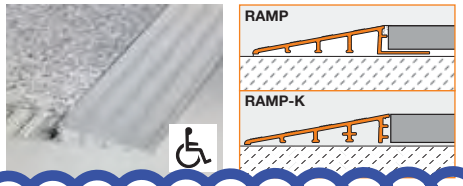

1.8 Schluter®-RENO-RAMP/-K

2.4.6.2

stresses on the tile, and, in sizes greater than 1/4" *(6 mm)*, features an integrated joint spacer that establishes a defined joint cavity between the tile and the profile. The anchoring leg of SCHIENE, in all materials, is available with a special radius perforation "R" so that the profile can be used to form curves.

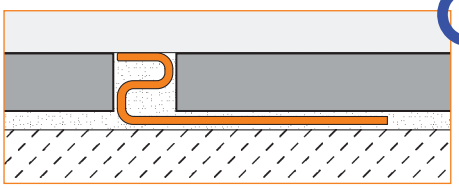

1.6 Schluter®-DECO is designed to provide decorative lines within tile coverings and edge protection at transitions from tile coverings to other same-height surface coverings, such as wood or carpet. The profile is available in stainless steel, solid brass, chrome-plated solid brass, and

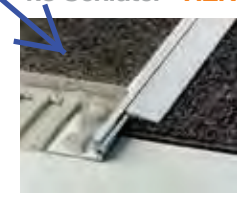

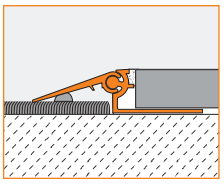

1.7 Schluter®-RENO-V

anodized aluminum. DECO features a trapezoid-perforated anchoring leg, which is secured in the mortar bond coat beneath the tile, and a 1/4" *(6 mm)*-wide visible surface that meets the high aesthetic requirements of showrooms, lobbies, galleries, exhibition booths, etc. The anchoring leg of DECO, in solid brass, chrome-plated solid brass, and anodized aluminum, is available with a special radius perforation "R" so that the profile can be used to form curves. DECO in chrome-plated brass requires a relatively large bending radius.

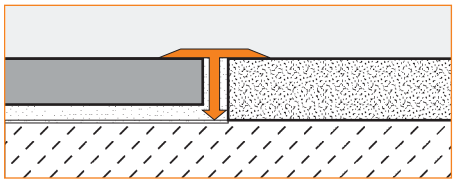

1.3 Schluter®-RENO-T is designed to provide transitions between existing same-height, hard-surface floor coverings (e.g., ceramic tile or natural stone, parquet flooring, concrete pavers, laminate, etc.), primarily in retrofit applications. The profile is available in stainless steel, solid brass, and anodized aluminum. RENO-T is installed within the existing joint cavity and overlaps adjoining surface materials, thus preventing edges from becoming damaged when subjected to mechanical stress. RENO-T, in brass and anodized aluminum size 9/14, is flexible in the lateral direction and can be used in curved applications.

Different-height Transitions

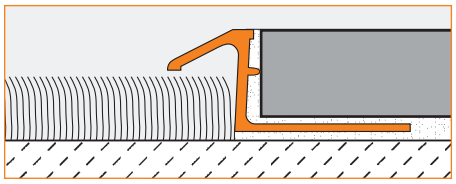

1.4 Schluter®-RENO-TK is designed to provide a smooth transition from tile coverings to floor coverings at lower elevations, typically carpet. The profile is available in stainless steel, solid brass, and anodized aluminum. RENO-TK features a trapezoid-perforated anchoring leg, which is secured in the mortar bond coat beneath the tile, and a sloped surface to eliminate trip hazards and protect tile edges. The 1/4" *(6 mm)* channel beneath the sloped flange of the profile hides and protects the cut edge of lower adjoining surface coverings. All sizes of the RENO-TK are compliant with the Americans with Disabilities Act (ADA). RENO-TK, in anodized aluminum, features an integrated joint spacer that establishes a defined joint cavity between the tile and the profile. The anchoring leg of RENO-TK, in solid brass and anodized aluminum, sizes 60 to 100, is available with a special radius perforation "R" so that the profile can be used to form curves.

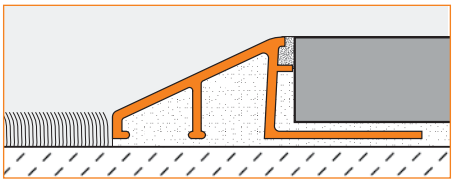

1.2 Schluter®-RENO-U is designed to provide a smooth transition between tile coverings and floor coverings at lower elevations or finished concrete. The profile is available in stainless steel, solid brass, and anodized aluminum. RENO-U features a trapezoid-perforated anchoring leg, which is secured in the mortar bond coat beneath the tile, and a sloped surface (approximately 25°) that eliminates trip hazards and protects tile edges. The leading edge of the profile abuts the lower surface covering, typically VCT. RENO-U, in aluminum, features an integrated joint spacer that establishes a defined joint cavity between the tile and the profile. In installations where the leading edge abuts a lower surface covering, all sizes of RENO-U, except the 3/4" *(20 mm)* and 11/16" *(17.5 mm)*, are compliant with the Americans with Disabilities Act (ADA). In installations where the leading edge rests on top of the lower floor covering (e.g., finished concrete), the 3/4" *(20 mm)*, 11/16" *(17.5 mm)*, and 9/16" *(15 mm)* sizes are not ADA-compliant.
Note: When using Schluter® uncoupling membranes with RENO-U profiles, factor in the thickness of the membrane over the anchoring leg when selecting the profile height.

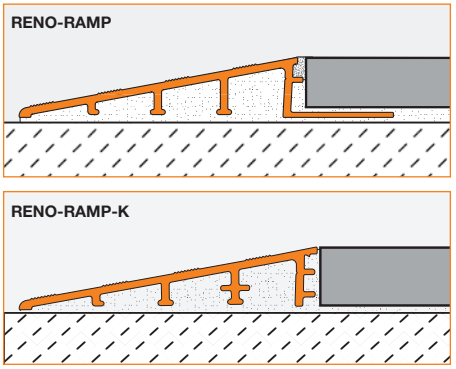

1.8 Schluter®-RENO-RAMP is designed to provide a smooth transition between tile coverings and floor coverings at lower elevations or finished concrete, particularly in commercial applications where wheel carts are used (e.g., bakeries, hospitals, etc.). The profile is available in anodized aluminum. RENO-RAMP features a trapezoid-perforated anchoring leg, which is secured in the mortar bond coat beneath the tile, and a sloped transition surface that terminates at the height of the tile edge. The profile protects tile edges and provides a sloped surface to eliminate trip hazards and allow easy access for wheel carts. RENO-RAMP features an integrated joint spacer that establishes a defined joint cavity between the tile and the profile.
Note: When using Schluter® uncoupling membranes with RENO-RAMP profiles, factor in the thickness of the membrane over the anchoring leg when selecting the profile height.
Schluter®-RENO-RAMP-K is a variant of the profile without an anchoring leg. RENO-RAMP-K is installed adjacent to existing floor coverings, e.g., retrofitting between existing floor coverings and bare concrete without having to disturb the existing flooring. All sizes of RENO-RAMP, except sizes 9/16" *(15 mm)* and 3/4" *(20 mm)*, are compliant with the Americans with Disabilities Act (ADA).

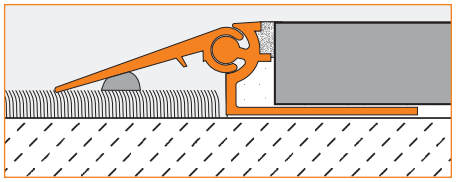

1.7 Schluter®-RENO-V is designed to provide a smooth transition between tile coverings and floor coverings at lower elevations. The profile is available in anodized aluminum. RENO-V features a trapezoid-perforated anchoring leg, which is secured in the mortar bond coat beneath the tile, and a movable transition arm that allows the profile to adjust to the height of the adjacent floor covering via a ball-and-socket joint. The profile protects tile edges and provides a sloped surface to eliminate trip hazards. RENO-V features an integrated joint spacer that establishes a defined joint cavity between the tile and the profile. RENO-V is also suitable for heavy-duty applications (e.g., entrances to garages or loading docks). In such cases, the adjustable arm is backfilled with mortar.



Aluminum
1/8" (*3.5 mm*)

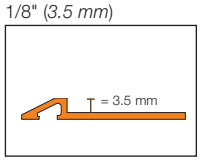

5/16" - 3/8" (*8 - 10 mm*)

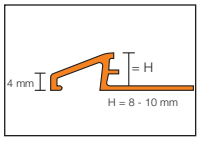

1/2" - 3/4" (*12.5 - 20 mm*)

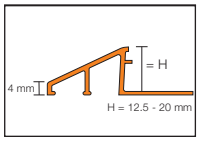

Stainless steel, Brass

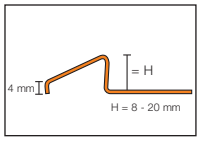

1.2 Schluter®-RENO-U

H = mm - *in.*	Item No. Stainless steel 304 (1.4301 = V2A) (E)	Brushed stainless steel 304 (1.4301 = V2A) (EB)	Solid brass (M)	Satin anodized aluminum (AE)	Bright chrome anodized aluminum (ACB)	Satin nickel anodized aluminum (AT)	Brushed nickel anodized aluminum (ATGB)
3.5 - *1/8*	-	-	-	AEU 35	-	-	-
8 - *5/16*	EU 80	EBU 80	MU 80	AEU 80	AU 80 ACB	AU 80 AT	AU 80 ATGB
10 - *3/8*	EU 100	EBU 100	MU 100	AEU 100	AU 100 ACB	AU 100 AT	AU 100 ATGB
11 - *7/16*	EU 110	EBU 110	-	-	-	-	-
12.5 - *1/2*	EU 125	EBU 125	MU 125	AEU 125	AU 125 ACB	AU 125 AT	AU 125 ATGB
15 - *9/16*	EU 150	EBU 150	MU 150	AEU 150	-	-	-
17.5 - *11/16*	EU 175	EBU 175	-	AEU 175	-	-	-
20 - *3/4*	EU 200	EBU 200	-	-	-	-	-

H = mm - *in.*	Item No. Satin copper anodized aluminum (AK)	Brushed copper anodized aluminum (AKGB)	Brushed antique bronze anodized aluminum (ABGB)	Satin brass anodized aluminum (AM)	Bright brass anodized aluminum (AMB)
8 - *5/16*	AU 80 AK	AU 80 AKGB	AU 80 ABGB	AU 80 AM	AU 80 AMB
10 - *3/8*	AU 100 AK	AU 100 AKGB	AU 100 ABGB	AU 100 AM	AU 100 AMB
12.5 - *1/2*	AU 125 AK	AU 125 AKGB	AU 125 ABGB	AU 125 AM	AU 125 AMB

Length supplied: 8' 2-1/2" — *2.5 m*

ADA-Compliant

Note: When leading edge abuts lower surface covering, sizes 3/4" *(20 mm)* and 11/16" *(17.5 mm)* are not ADA-compliant. When leading edge rests on top of lower surface covering, sizes 3/4" *(20 mm)*, 9/16" *(15 mm)*, and 11/16" *(12.5 mm)* are not ADA-compliant.

Diagram Values

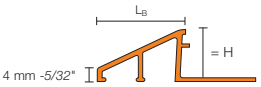

H = mm - *in.*	L_B = mm - *in.* Aluminum	Stainless steel/Brass
3.5 - *1/8*	9 - 23/64	-
8 - *5/16*	12.5 - 31/64	13 - *33/64*
10 - *3/8*	16.5 - 21/32	17.5 - *11/16*
11 - *7/16*	-	19.5 - *49/64*
12.5 - *1/2*	22 - 55/64	23 - *29/32*
15 - *9/16*	27.5 - 1-5/64	28 - *1-7/64*
17.5 - *11/16*	27 - 1-1/16	33.5 - *1-5/16*
20 - *3/4*	*31.5 - 1-15/64*	40 - *1-37/64*



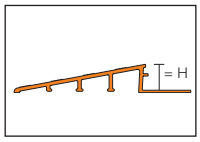

1.8 Schluter®-RENO-RAMP

H = mm - *in.*	Item No. Satin anodized aluminum (AE)
B = 50 mm - *2"*	
6 - *1/4*	AERP 60 B50
B = 64 mm - *2-1/2"*	
10 - *3/8*	AERP 100 B65
12.5 - *1/2*	AERP 125 B65
B = 89 mm - *3-1/2"*	
12.5 - *1/2*	AERP 125 B90
15 - *9/16*	AERP 150 B90
20 - *3/4*	AERP 200 B90

Length supplied: 8' 2-1/2" — *2.5 m*

ADA-Compliant

Note: RENO-RAMP sizes 3/4" - *20 mm* and 9/16" - *15 mm* are not ADA-compliant.

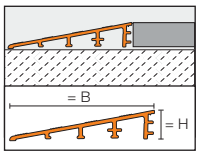

B = 64 mm - *2-1/2"*

1.8 Schluter®-RENO-RAMP-K

H = mm - *in.*	Item No. Satin anodized aluminum (AE)
B = 64 mm - *2-1/2"*	
12.5 - *1/2*	AERPK 125 B65

Length supplied: 8' 2-1/2" — *2.5 m*

Diagram Values

Length supplied: 8' 2-1/2" — *2.5 m*

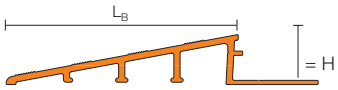

H = mm - *in.*	L_B = mm - *in.*
6 - *1/4*	50 - *2*
10 - *3/8*	64 - *2-1/2*
12.5 - *1/2*	*64* - *2-1/2*
12.5 - *1/2*	89 - *3-1/2*
15 - *9/16*	89 - *3-1/2*
20 - *3/4*	89 - *3-1/2*

TECHNICAL DATA

Project :
Wasterwaterplan upgrade
Iqaluit
IQA 29132-00

Dated : July 18, 2018

Submitted to:
Kudlik Construction
P.O. Box 727
1519 Federal Road
Iqaluit, NU X0A 0H0

Manufacturer :
Roppe

Contractor	Tapico Québec Inc.
Adress :	3260, avenue Watt Bureau 105 Québec (Québec) G1X 4T5
Phone:	418-659-4400
Project manager:	Maryse Arbour
Email:	marbour@tapico.ca

Drawing # : 3
Number of pages: 7

Description:

Wall base 4'' Pinnacle series long toe profile

Choose colour

Professional verifiation

Submitted product:	**Drawing issued for:**
☑ As specified	☐ Verification
☐ Equivalent	☐ Information
☐ Substitution	☐ Coordination
	☐ Reissue

Delivery time:

Drawing reference:

Specification reference: 09 65 16
2.3.1

Note:

ROPPE.
TECHNICAL DATA SHEET

pinnacle
RUBBER WALL BASE

Product Description

Roppe Pinnacle Rubber Wall Base is a true, 100% thermoset (TS) rubber wall base that is PVC free, phthalate free and Red List chemical free.

Pinnacle Rubber Base is incredibly durable, allowing it to stand up to a wide range of use when compared to vinyl wall base. It is also extremely flexible, making Pinnacle Rubber Base easy to install, especially when installing around tight radius' such as columns, corners and architectural curves without altering or treating the product.

Pinnacle Rubber Base is designed for use in commercial wall base applications. Available in a wide range of heights, from 2 1/2" to 6", and a wide range of toes, allows Pinnacle Rubber Base to match a wide variety of flooring installations and application requirements.

Pinnacle Rubber Base is FloorScore certified, and meets a variety of VOC requirements, while also meeting many of the strictest requirements of today's green building certification systems. Pinnacle Rubber Base is manufactured in the USA and is recyclable through the Roppe IMPACT recycling program.

Features

- **PVC Free**
- **Phthalate Free**
- **Red List Chemical Free**
- **Extremely Durable**
- **Extremely Flexible**
- **Available in Wide Variety of Sizes**
- **Will Not Shrink, Gap or Cup**
- **Recycleable (IMPACT Recycling Program)**
- **Qualifies for LEED® Credits**

Technical Data

Toe Styles:	**Cove, No Toe, Butt Toe, Long Toe, Sanitary Toe**
Nominal Height - Standard Base:	**2 1/2" (63.5 mm) 3" (76.2 mm) 3 1/2" (88.9 mm) 4" (101.6 mm) 4 1/2" (114.3 mm) 5" (127 mm) 5 1/2" (139.7 mm) 6" (152.1 mm)**
Nominal Height - Speciality Base:	**4"**
Nominal Length - Standard Base:	**48" Sections (1.22 m) 120' Rolls (36.58 m)**
Nominal Length - Specialty Base:	**48" Sections (1.22 m)**
Nominal Thickness - All Base:	**1/8" (3.2 mm)**
LEED v2009 IEQ Credit 4.1:	**Qualifies**
ASTM F1861 – Resilient Wall Base:	**Type TS, Group 1, Style A, B & C**
ASTM E648 (NFPA 253) - Critical Radiant Flux:	**Class I, > 0.45 W/cm²**
ASTM E662 (NFPA 258) - Smoke Density:	**Passes, <450**
ASTM E84 - Flammability:	**Class B**
CAN/ULC-S102.2 - Surface Burning:	**FSR 50, SDS 175**
Acclimation Time:	**48 Hours**
Storage & Acclimation Temperature:	**65° - 85° F**

Additional Information

Approved Adhesives

- WB-600 Acrylic Wall Base Adhesive
- AW-510 Acrylic Wet-Set Adhesive
- C-630 Contact Adhesive

Additional Accessories

Inside & Outside Corner Blocks or Inside & Outside Micro Corner Blocks are available to match wall base installations.

Availability, Cost & Samples

Roppe Flooring products are sold through distribution. To locate the nearest distributor, visit roppe.com or send an e-mail to support@roppe.com.

Technical Documents & Support

Additional product resources and technical documents are available online at roppe.com. For additional technical support, send an e-mail to solutions@rhctechnical.com.

Wall Base & Corners

Standard Wall Base

Toe Type:	**Cove, No Toe**
Base Height:	**2 ½" (63.5 mm), 3" (76.2 mm) 3 ½" (88.9 mm), 4" (101.6 mm) 4 ½" (114.3 mm), 5" (127 mm) 5 1½" (139.7 mm), 6" (152.1 mm)**
Base Thickness:	**⅛" (3.2 mm)**
Base Length:	**48" (1.22 m) Sections 120' (36.58 m) Coils**
Base Carton Quantity:	**30 Pieces / 1 Coil**

Specialty Wall Base

Toe Type:	**Butt Toe, Long Toe, Sanitary**
Toe Length - Long Toe:	**1"**
Toe Length - Sanitary:	**2"**
Base Height:	**4" (101.6 mm)**
Base Thickness:	**⅛" (3.2 mm)**
Base Length:	**48" (1.22 m) Sections**
Base Carton Quantity:	**30 Pieces**

Standard Wall Base Factory Corners

Toe Type:	**Cove, No Toe (2 ½" & 4" Only)**
Corner Type - Cove:	**Inside & Outside**
Corner Type - No Toe:	**Outside Only**
Corner Height:	**2 ½", 4", 6" (cove only)**
Corner Thickness:	**⅛"**
Corner Return Length:	**2 ¼" (57.15 mm)**
Corner Carton Quantity:	**25 pieces**

Specialty Wall Base Factory Corners

Toe Type:	**Long Toe, Sanitary**
Corner Type:	**Outside Only**
Corner Height:	**2 ½" (63.5 mm), 4" (101.6 mm)**
Corner Thickness:	**⅛" (3.2 mm)**
Corner Return Length:	**3"**
Corner Carton Quantity:	**25 Pieces**

Corner Blocks

Corner Type:	**Inside & Outside**
Corner Height:	**We recommend 1/8" - 1/4" Above the Height of the Base**
Corner Thickness:	**1/2" (12.77 mm)**
Corner Return Length:	**1 1/2" (38.1 mm) with wings**
Corner Carton Quantity:	**15 Pieces**

Micro-Corner Blocks

Corner Type:	**Inside & Outside**
Corner Height:	**We recommend 1/8" - 1/4" Above the Height of the Base**
Corner Thickness:	**1/4" (6.98 mm)**
Corner Return Length:	**1 1/4" (32.38 mm) with wings**
Corner Carton Quantity:	**15 Pieces**

1. PRE-INSTALLATION CHECKLIST

- Consult all associated product literature concerning installation and warranty prior to installation.
- Allow all trades to complete work prior to installation.
- Deliver all materials to the installation location in its original packaging with labels intact.
- Inspect all materials to ensure there is no damage.
- Do not stack pallets to avoid damage.
- Ensure installation area and material storage temperatures are between 65º F (19º C) and 85º F (30º C) and 40% - 65% RH for at least 48 hours before, during and after installation.
- Ensure HVAC system is operational and fully functioning at normal operating conditions 48 hours prior to, during and 48 hours after installation.
- Protect installation area from extreme temperature changes, such as heat and freezing, as well as direct sunlight for at least 48 hours before, during and after installation.
- Do not proceed with installation until all conditions have been met.

2. PRODUCT LIMITATIONS

Do not install materials over existing wall base, flash-coved rubber, vinyl or linoleum flooring, cork, or asphaltic materials. Do not install wall base materials in outdoor areas and in or around commercial kitchens. Do not install in areas that may be subjected to sharp, pointed objects. Do not allow product to be directly exposed to extreme heat sources, such as radiators, ovens or other high-heat equipment. May be susceptible to staining from harsh disinfectants, cleaning agents, dyes or other harsh chemicals – ensure all chemicals and materials that may come in contact with wall base will not stain, mar or otherwise damage the material prior to use.

3. SUBSTRATE PREPARATION

All substrates must be clean, smooth, permanently dry, flat, and structurally sound. Substrates must be free of visible water or condensation, dust, sealers, water-based / acrylic paint, residual adhesives and adhesive removers, solvents, wax, oil, grease, asphalt, gypsum compounds, visible alkaline salts or excessive efflorescence, mold, mildew and any other extraneous coating, film, material or foreign matter. Substrate must be a structurally sound interior wall surface, such as dry plaster, cured drywall, fiber-reinforced plastic (FRP) panels, fiberglass, exterior grade plywood (Group 1, CC type), concrete, metal and masonry. Any cracks, voids, divots, grout lines and imperfections must be filled with a patch or filler suitable for the substrate.

When installing directly over a resinous products, such as an epoxy paint, ensure that coating is dry to the touch and has cured for the prescribed length of time. Substrate must be clean, dry, sound and free of contaminates. Material to be installed over non-porous substrates, such as epoxy paint, FRP panels or fiberglass, must be installed with the Excelsior C-630 Contact Adhesive.

Metal substrates must be thoroughly sanded/ground and cleaned of any residue, oil, rust and/or oxidation. Substrate must be smooth, flat and sound prior to installation. When installing in areas that may be subject to topical water or moisture and/or high humidity, an anti-corrosive coating must be applied to protect metal substrate. Contact a local paint or coating supplier for coating recommendations. Install wall base within 12 hours after sanding/grinding to prevent re-oxidation. Metal substrates are non-porous – follow all installation instructions, trowel sizes and flash times for non-porous substrates.

4. FACTORY CORNER INSTALLATION

Roppe Pinnacle Factory Corners, Corner Blocks and Micro Corner Blocks must be installed prior to Pinnacle Wall Base materials. Ensure substrate is suitably prepared prior to installation, as manufacturer is not responsible for substrates that have not been properly prepared. Ensure adhesive is approved for use with wall base material and that proper trowel or applicator type and size is used, as manufacturer is not responsible for any and all adhesion issues related to improper adhesive selection or usage.

Corners and corner blocks must be installed on 90° corners - do not attempt to install corner blocks over other angles, including 135° angles. Install adhesive to the back of the corner or corner block and install onto corner. Mechanically fasten the returns / wings of corner blocks with staples or brad nails to increase stability. When fastening, ensure that staples or nail heads do not protrude from return, as they may telegraph through wall base material.

5. WALL BASE INSTALLATION

Prior to installation, ensure wall base material has been properly acclimated and that ambient conditions are within normal operational ranges. Ensure substrate is suitably prepared prior to installation, as manufacturer is not responsible for substrates that have not been properly prepared. Ensure adhesive is approved for use with wall base material and that proper trowel or applicator type and size is used, as manufacturer is not responsible for any and all adhesion issues related to improper adhesive selection or usage. When installing wall base in areas that may be subjected to abuse, such as intentional removal, the Excelsior AW-510 or C-630 adhesives must be used to prevent removal.

Cut wall base to desired length and fit tightly against corner blocks or allow for job-site formed corners detailed in section 6.

Apply adhesive to the back of the wall base per adhesive instructions, ensuring that wet-set adhesives do not come within 1/4" of the top of the wall base. Install wall base to substrate, ensuring that wall base material is not stretched or over-compressed during installation. Stretching material or over-compressing seams and corners may cause wall base to shrink and/or curl/delaminate, respectively.

Periodically lift material to ensure proper adhesive transfer - adhesive should cover 90% of material. Using a suitable hand roller, carefully roll material in the direction of the last piece installed with a hand roller within 30 minutes of installation.

Pinnacle wall base and corner blocks installations can be enhanced by using Roppe's matching Colored Caulk to fill any voids or imperfections. Allow wall base to cure for the required period of time - do not disturb wall base installation until curing time is complete.

6. JOB-SITE FORMED CORNERS

Ensure substrate is suitably prepared prior to installation, as manufacturer is not responsible for substrates that have not been properly prepared. Ensure adhesive is approved for use with wall base material and that proper trowel or applicator type and size is used, as manufacturer is not responsible for any and all adhesion issues related to improper adhesive selection or usage.

OUTSIDE CORNERS

To create an outside corner on-site using wall base material, position wall base material firmly against the wall, allowing wall base to overhang corner in the direction that it will be installed. Use a pencil to mark the center of the corner on the back of the wall base, ensuring pencil line is straight and runs from the top of the wall base to the base of the toe.

Reposition wall base material on a flat, stable surface, backside facing up. Use a top-set gouge to create a center groove on the long side of the pencil line, removing ~30% of the wall base material. Ensure center groove is on the side of the line that is in the direction the wall base will be installed. Remove excess material from each side of the corner groove.

Use a pencil to mark 1" from the base of the toe on the center line. From the 1" mark, mark a straight line on a 45° angle to the base of the toe on either side of the center groove. Use the top-set gouge to cut two stress relief grooves along the pencil line. Use a knife to remove all excess material between the stress relief groove and the center groove.

Outside Corner Detail

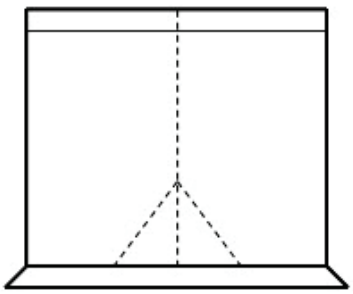

While rolling to toe of the wall base up, fold wall base along center groove to form the corner. The top edge of the wall base should fit tight and flush to the wall's surface, while the toe should be rounded and sit flat on the surface of the floor.

Apply adhesive to the back of the wall base per adhesive instructions, ensuring that wet-set adhesives do not come within 1/4" of the top of the wall base, and install wall base to substrate.

INSIDE CORNERS - TOE

To create an inside corner using wall base material, position wall base material firmly against the wall and into the corner. Use a pencil to mark the center of the corner on the back of the wall base and make note of wall base installation direction (from left to right or right to left). Reposition wall base material on a flat, stable surface, backside facing up. Prior to creating an inside corner, measure the distance from the end of the last piece of base installed to the inside corner. If the distance from the last piece of base installed and the corner is within 5', draw a center line 1/16" from initial center mark in the direction the wall base will be installed. If the distance is more than 5', draw a center line 1/8" from initial center mark in the direction the wall base will be installed. Ensure pencil line is straight and runs from the top of the wall base to the base of the toe.

Use a top-set gauge to create a center groove along the center line. Remove excess material from each side of the center groove. Fold wall base along center groove to form the inside corner. Use a utility knife to cut a "V" into the toe from the base of the toe to the end of the toe. Ensure "V" is slightly less than 45° to avoid removing too much material. Remove material to create a triangular void so that wall base can be installed into corner without the toe overlapping. Make any final adjustments prior to installation.

Apply adhesive to the back of the wall base per adhesive instructions, ensuring that wet-set adhesives do not come within 1/4" of the top of the wall base, and install wall base to substrate. The top edge of the wall base should fit tight and flush to the wall's surface and previously installed wall base. Once properly positioned, apply firm pressure to the corner to adhere it to the wall. Roll wall base with a hand roller in the direction the material was installed.

INSIDE CORNERS - NO TOE

To create an inside corner on-site using wall base material, install one side of the inside corner as usual, ensuring that wall base is flush with adjoining wall. Without applying adhesive, position the next section or coil of wall base on the adjoining wall with a ~1" gap from the installed material. Set a divider to the gap and move wall base material flush with the corner.

While applying firm pressure to the adjacent wall base corner with divider, mark the wall base with the divider to determine scribe line. Use a suitable knife to trim wall base along scribe mark. Install wall base as usual, ensuring that wet set adhesives do not come within 1/4" of the top of the wall base and do not squeeze out of wall base corner.

7. INITIAL MAINTENANCE

Ensure that adhesive has cured for recommended period of time prior to conducting initial maintenance. Remove any protective coverings prior to cleaning. Sweep, dust or wipe material to remove any dirt, dust or debris. DO NOT use vacuums or electric brooms which have beater bars, hard plastic bottoms, a rubber bumper or are lacking proper padding or protection, as this may cause marking, discoloration, scratching and loss of sheen. Do not use detergents, abrasive cleaners or “mop and shine” type products, as they will dull the finish and sheen of the material.

Mix 2-4 ounces of Excelsior NC-900 Neutral Cleaner per gallon of clean, potable water. Use a clean towel or cloth to apply cleaner to material. If heavily soiled, an additional cleaning may be required. Use clean towel or cloth to remove any and all excess cleaning solution. Rinse area with clean, cool water and allow material to dry entirely. Ensure material is clean and that all all cleaning residue has been removed (this may require additional rinsing).

For further information regarding daily or routine maintenance, please consult the product care & maintenance document or the associated product technical data sheet.

8. MATERIAL PROTECTION

Protect newly installed material with construction grade paper or protective boards, such as Masonite or Ram Board, to protect material from damage by other trades. Limit usage and foot traffic according to the adhesive's requirements. When moving appliances or heavy furniture, protect wall base from scuffing and tearing using temporary floor protection.

9. PAINTING PROCEDURES

Pinnacle wall base may be painted, if desired. Once wall base has been cleaned and wall base is free of all residues which may interfere with bonding, the wall base must be primed prior to final painting. Be sure to select a high quality primer that is recommended and compatible with rubber and vinyl, such as a 100% acrylic or a 100% acrylic latex paint primer. Test compatibility on an un-installed piece of wall base to confirm adhesion, compatibility and performance.

Once the primer has properly dried, the wall base can be painted with a high quality acrylic latex paint. Follow all primer and paint manufacturer’s recommendations and guidelines. Confirm proper maintenance procedures for paint prior to cleaning.

10. WARRANTY

Roppe provides a 2 year limited warranty for all Pinnacle wall base. For additional information, see associated warranty documents.

FOR PROFESSIONAL USE ONLY. PLEASE CONSULT ALL ASSOCIATED TECHNICAL DATA SHEETS, SAFETY DATA SHEETS, MAINTENANCE DOCUMENTS AND WARRANTY INFORMATION PRIOR TO INSTALLATION.

TILE, TREAD, RUBBER ACCESSORIES AND TS, TP AND TV WALL BASE

✱ *Contours® colors*

✱ 100 black	177 steel blue	✱ 150 dark gray	✱ 193 black brown	✱ 123 charcoal	✱ 114 lunar dust	✱ 129 dolphin	✱ 178 pewter
✱ 194 burnt umber	148 steel gray	✱ 175 slate	✱ 174 smoke	197 iceberg	✱ 110 brown		
✱ 147 light brown	✱ 182 toffee	✱ 623 nutmeg	✱ 624 chameleon	✱ 140 fawn	✱ 191 camel	✱ 125 fig	171 sandstone
✱ 130 buckskin	✱ 198 ivory	✱ 632 flax	✱ 184 almond	✱ 170 white	✱ 131 bisque	127 harvest yellow	✱ 631 sahara
✱ 639 beigewood	640 creekbed	✱ 122 natural	✱ 195 light gray	663 aged fern	648 pear green	647 spring dill	646 gecko
160 forest green	649 sweet basil	169 hunter green	662 envy	118 peacock	187 blue	139 deep navy	627 mariner
618 aubergine	665 horizon	664 blue jay	656 bluebell	654 lagoon	638 cadet	637 night mist	655 peaceful blue
657 sorbet	658 berry ice	621 merlin	659 grape	186 red	137 cinnabar	188 brick	617 terracotta
660 citrus	661 marmalade	643 mimosa	644 sunbeam	642 jonquil	645 blonde	✱ 641 moonrise	✱ 161 snow

ROPPE. Proven. Flooring. Experiences.

COLOR

Technical Data Sheet : FUSION 951 WALL BASE ADHESIVE

P r o d u c t Description: FUSION 951 Wall-Base Adhesive is a premiumgrade, water-based adhesive that is easy to apply, and has excellent bond strength and impact resistance.

Uses: To install vinyl and rubber wall base

Limitations: Protect from freezing. Adhesive is freeze-thaw stable to 10°F (-12°C). Avoid prolonged or repeated freeze-thaw cycles. Protect from physical damage. Do not install over vinyl wall coverings or other non-porous surfaces.

Open Time: 30 minutes' working time (depending on environmental conditions)

Surface Preparation: Wall surfaces must be clean, smooth, flat, dry and free of any foreign matter that might interfere with the bond of the adhesive. Scarify surface of glossy paint. Plaster must be dry and fully cured. Never apply over wallpaper, sandy brown coat plaster, or fresh plaster with high moisture content.

Application Instructions: Condition adhesive and materials to 65°F (18°C) and 35-65% relative humidity, 48 hours prior to and after installation. Remove any oily substances or dust from the back of the wall base using a white cloth and denatured alcohol. Apply the adhesive to the back of the wall base or on the wall using the appropriate notched spreader with a 2-, 3- or 5-hole applicator nozzle when using adhesive cartridge. Press the base firmly into place within 10 minutes of adhesive application. Roll the base into place using a small hand roller. Check periodically to ensure at least 75% of the back of the wall base is covered with adhesive.

Cleanup: Clean up wet adhesive with a white cloth using soap and water. Dried adhesive residue can be removed with mineral spirits.

Handling and Storage: Store in a cool dry place at 50°F – 90°F (10°C – 32°C). Keep away from excessive heat. Keep out of reach of children.

REFER TO MATERIA L SAFETY DATA SHEET FOR MORE DETAI LED INFORMATION .

COVERAGE RECOMMENDATIONS : Approximately 50 lineal feet (15,2 linear m) of 4" (10 cm) wall base per 28.7 oz. (0,85 L) cartridge

SUBMITTALS IDENTIFICATION SHEET

PROJECT: Wastewater Treatment Plant Upgrade
Iqaluit, Nunavut

NUNAMI
STANTEC LIMITED
1088C Noble House
Iqaluit NU
www.stantec.com

CONTRACTOR: Kudlik Construction Ltd, Project 2018-062

Telephone: 867-979-1166

E-mail: srousseau@kudlik.biz

SUBCONTRACTOR:

Person responsible:

Telephone: () E-mail:

PRODUCT SUBMITTED:

☐ As Specified

☐ Alternate

SUPPLIER or MANUFACTURER: Ebenisterie Lac-St-Jean

Person responsible: Jeassica Bouchard

Telephone: 418-343-3487 E-mail: jessicab@ebenisterielacstjean.com

DESCRIPTION OF SUBMITTAL: vanity & windows sill

# of pages:

Reference to drawings: A301

Reference to specs:

Division: 06 - 10 Section:

REMARKS:

REVIEW AND COMMENTS (for use by Consultants):

STANTEC PROJECT #: 110126045 SUBMITTAL # SU-26 rev 1

This review by Stantec is for general conformance with the design concept of Stantec's design of the:

☑ Architectural ☐ Electrical
☐ Structural ☐ Other
☐ Mechanical

component(s) only and does not mean that Stantec has verified or approves the shop drawing(s). The Contractor remains solely responsible for the shop drawing(s) and this review by Stantec does not relieve the Contractor of the Contractor's responsibility for errors or omissions in the shop drawing(s) or for meeting all requirements of the contract documents. This review does not mean that Stantec approves the detailed design inherent in the shop drawing, responsibility for which shall remain with the Contractor submitting same, nor does this review mean that Stantec accepts any deviation of the shop drawing(s) from the contract documents. The Contractor is responsible for confirming all dimensions and correlating them at the job site, for all construction means, methods and techniques, and for coordination of construction work of all trades, including coordination of all shop drawings.

Stantec

☐ REVIEWED
☑ REVIEWED, AS NOTED
☐ REVISE AND RESUBMIT
☐ NOT REVIEWED

DATE 2018-08-07

BY TFlender

see comments in blue
Revision: vanity finish

Review of this submission is for compliance with general intent of the contract. This review does not relieve the Sub-Contractor, Supplier or Manufacturer of responsibility for error or omissions in the submission or the responsibility of meeting all requirements of the contract documents. Any deviation from the contract documents initiated by the Sub-Contractor, Supplier or Manufacturer shall be at their sole risk. QUANTITIES AND DETAIL DIMENSIONS ARE THE SUB-CONTRACTORS OR SUPPLIERS RESPONSIBILITY. VERIFY DATA WITH FIELD DIMENSIONS.

SUBMITTAL TRACKING No.: **SU-026 REV 1** 2018-08-07

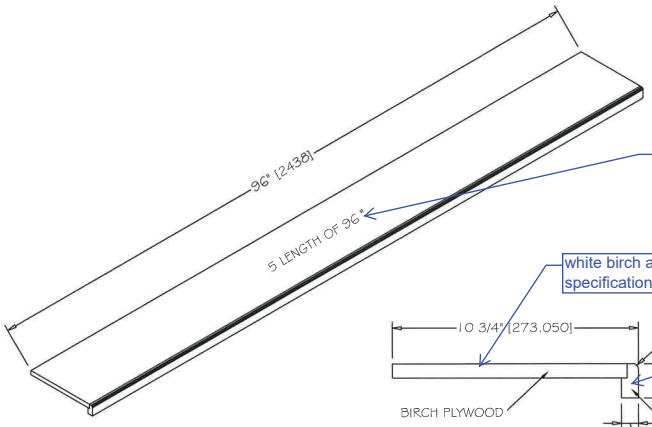

to be verified by contractor

supply by mechanical DA-026 lavatory

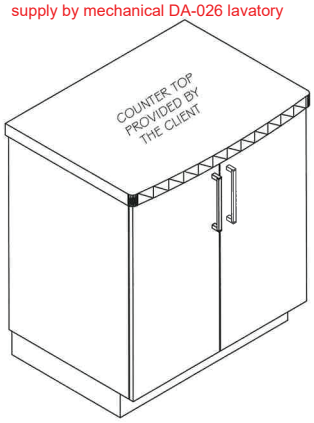

as per vanity shop drawing (mechanical): 581mm

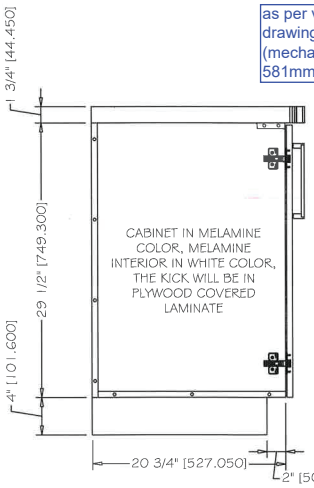

OK

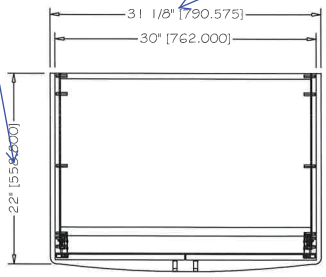

ÉBÉNISTERIE Lac-St-Jean
Tél.: (418) 343-3487
Fax : (418) 343-2976
www.ebenisterielacstjean.com
R.B.Q.: 2331-3968-31
Manufacturier d'armoires de cuisine, vanités, lingeries, meubles de tous genres, escaliers.
575, avenue Château, St-Bruno (Québec) G0W 2L0

Client:
IQALUIT WASTEWATER TREATMENT PLANT UPGRADE

Projet:
x

Notes:

Signature:
(Acceptation des plans)
X

Conçu par:
NUNAMI STANTEC

Dessiné par:
Jessica Bouchard

Date:
09/07/2018

1 / 1

See all data sheets

Melamine and Plastic Laminated

FINSA

solutions in wood

For cabinet

FIMAPLAST / FIBRAPLAST/SUPERPAN DECOR/

TECHNICAL DATA-AVERAGE VALUES Rev: 29/04/2008

PROPERTIES	TEST METHOD	UNITS	THICKNESSES mm		
			<15	15-20	>20

TOLERANCE ON NOMINAL DIMENSIONS

PROPERTIES	TEST METHOD	UNITS	THICKNESSES mm		
			<15	15-20	>20
THICKNESS ON NOMINAL DIMENSIONS	UNE-EN-14323	mm	+/-0,3 (AI,AV) +0,5/-0,3 (AH)	+/-0,3 (AI,AV) +0,5/-0,3 (AH)	+/-0,5
THICKNESS WITHIN THE BOARD	UNE-EN-14323	mm	max-min <0,6	max-min <0,6	max-min <0,6
LENGHT & WIDTH	UNE-EN-14323	mm	+/-5	+/-5	+/-5
FLATNESS (SOLAMENTE EN REVESTIMIENTOS EQUILIBRADOS)	UNE-EN-14323	mm/m	-	≤2	≤2

COATING PROPERTIES

PROPERTIES	TEST METHOD	UNITS	THICKNESSES mm
RESISTANCE TO SCRATCHING	UNE-EN 14323	N	≥ 1.5
RESISTANCE TO CRACKING	UNE-EN 14323	Rating	≥ 3
SURFACE ASPECT	UNE-EN 14323	Rating	4
RESISTANCE TO STAINING (GROUPS 1 Y 2)	UNE EN 14323	Rating	5
RESISTANCE TO STAINING (GROUP 3)	UNE EN 14323	Rating	4

VISUAL DEFECTS

EDGES DAMAGED	UNE-EN 14323	mm	≤10
SURFACE DEFECTS. POINTS	UNE-EN 14323	mm2/m2	≤2
SURFACE DEFECTS. LENGHT	UNE-EN 14323	mm/m2	≤20

RESISTANCE TO ABRASION:	TEST METHOD	CLASS	IP NUMBER OF TURNS	WR NUMBER OF TURNS
RESISTANCE TO ABRASION:. DESIGNS (GENERAL APPLICATIONS)	UNE-EN 14323	1	<50	<150
RESISTANCE TO ABRASION. UNICOLORS AND HORIZONTAL APPLICATIONS (AH)	UNE-EN 14323	3A	≥150	≥350

The physical-mechanical properties of these products will be those of the baseboard used.

Comply with Class E1 requirements, low formaldehyde content, according to UNE-EN 14322 Standard.

HANDLING/STORAGE:

It must always be stored under cover and on a flat surface.
65% of humidity is the ideal condition for its storage, dryer or more moist environments should be avoided.
It must never be in direct contact with water.
Blocks must always be lined up with the vertical.
Never pile up more than 4 heights.
If the packaging is damaged during its handling, it must be packed again so the product is correctly preserved.

If the piling-up conditions or the changes in moisture or temperature above mentioned are not respected in the warehouses or the processing areas, they may cause irreversible deformations and warpings.

Google+
Google+



Ultra Clear Post-Catalyzed Conversion Varnish

Ultra Clear Conversion Varnish provides the ultimate high-end professional interior finish performance and appearance. These products not only pass but exceed the requirements of all KCMA Household Chemical Tests. Ultra Clear Conversion Varnish is a post-catalyzed water-white conversion varnish. When used with our Ultra Clear Conversion Varnish Sealer or a Self-Sealed system, these topcoats produce a finish system with maximum durability, wear, and moisture resistance. They have good color retention properties and form a highly flexible film. A UV inhibitor is included to stabilize colors. These finishes can be sprayed with conventional, airless, HVLP, and air-assisted airless equipment. Use Ultra Clear Conversion Varnish wherever the ultimate in finish protection is desired, such as kitchen and bath cabinets, laboratories, dormitories, office furniture, and display fixtures. Low-VOC. Before use, this product must be catalyzed at 8 oz. per gallon with M615-701. Ultra Clear Conversion Varnishes are high-solids, low-viscosity formulas that provide the best flow and build without reduction.

- Ultra clear
- Ultra high solids
- VOC-compliant
- Ultra high build
- Maximum durability
- 44% sprayable solids
- HAP-free
- Ultra-durable and moisture-resistant

Volume

1 gal.	5 gal.

Finish

 Matte	 Satin	 Semi-Gloss	 Gloss

Gloss Level

10	20	40	60	80

please choose varnish finish

AVAILABLE PRODUCTS

Product number	Volume	Finish	Gloss Level
M61529107	1 gal.	Matte	10
M61529207	1 gal.	Matte	20
M61529407	1 gal.	Satin	40
M61529607	1 gal.	Semi-Gloss	60
M61529807	1 gal.	Gloss	80
M61529108	5 gal.	Matte	10
M61529208	5 gal.	Matte	20
M61529408	5 gal.	Satin	40
M61529808	5 gal.	Gloss	80

TECHNICAL SPECIFICATIONS

Standards and Certifications	ANSI/KCMA
Category	Conversion Varnish
Color	Clear
Brand	Mohawk
Mixing Method	Post-Catalyzed

Birch Hardwood For Windows sill



(http://www.qualityhardwoodsltd.com/wp-content/uploads/2014/12/DSC_7406.jpg)

Yellow Birch

white birch as per specifications

Heartwood tends to be a light reddish brown, with nearly white sapwood. Occasionally figured pieces are available with a wide, shallow curl similar to the curl found in Cherry. There is virtually no color distinction between annual growth rings, giving Birch a somewhat dull, uniform appearance.

Average Dried Weight: 43 lbs/ft3 (690 kg/m3)

Crushing Strength: 8,170 lbf/in2 (56.3 MPa)

Workability: Generally easy to work with hand and machine tools, though boards with wild grain can cause grain tearout during machining operations. Turns, glues, and finishes well.

Inventory (http://www.qualityhardwoodsltd.com/inventory/#Yellow Birch)

Order

Popular Wood Types

 (http://www.qualityhardwoodsltd.com/portfolio/red-birch/)

 (http://www.qualityhardwoodsltd.com/portfolio/white-pine/)

 (http://www.qualityhardwoodsltd.com/portfolio/walnut/)

 (http://www.qualityhardwoodsltd.com/portfolio/red-oak/)

 (http://www.qualityhardwoodsltd.com/portfolio/hard-maple/)

 (http://www.qualityhardwoodsltd.com/portfolio/birdseye-maple/)

 (http://www.qualityhardwoodsltd.com/portfolio/yellow-birch/)

 (http://www.qualityhardwoodsltd.com/portfolio/aspen/)

 (http://www.qualityhardwoodsltd.com/portfolio/white-ash/)

 (http://www.qualityhardwoodsltd.com/portfolio/cherry/)

 (http://www.qualityhardwoodsltd.com/portfolio/basswood/)



(http://www.qualityhardwoodsltd.com/portfolio/soft-maple/)

Talk to one of our experts

Your Name (required)

Your Email (required)

Your Message

What is 2 x 4?

Send

© 2017 Forest Stewardship Council® A.C. The FSC® Trademark identifies products which contain wood from well-managed forests certified in accordance with the rules of the Forest Stewardship Council®. Certification number: RA-COC-001009

Hard Wood Plywood For Windows sill

INTERGOVERNMENTAL STANDARD
GOST 3916.1-96
Plywood with faces in hardwood veneer for general use.

Contents

- DESCRIPTION - GENERAL USE PLYWOOD
- CLASSIFICATION AND DIMENSIONS
- TECHNICAL REQUIREMENTS
- RULES OF ACCEPTANCE
- CONTROL METHODS
- TRANSPORTATION AND STORAGE
- PRODUCERS GUARANTEE

Table:
DESCRIPTION AND LIMITATIONS OF PLYWOOD DEFECTS

SPECIFICATIONS

Introduction date: 01-01-1998

1. DESCRIPTION - GENERAL USE PLYWOOD

This standard covers general use plywood with hardwood face veneer.

This standard is not applicable to specialty or decorative plywood.

Minimal requirements relating to the formaldehyde emission of plywood are covered in 4.3 and 6.8.

3. CLASSIFICATION AND DIMENSIONS

3.1. Plywood is subdivided into grades based on the following: appearance of face veneers, glue bond, the degree of moisture resistance of the bond, and if sanded or not.
3.1.1. The plywood is subdivided into 5 grades, based on the appearance of the face veneers: E (elite), I, II, III and IV. Descriptions of the face grades of the plywood are specified in Supplement A.
3.1.2. The degree of moisture resistance of the plywood bond is specified by the following marks:

- FSF - water proof plywood (WBP)
- FK - water resistant plywood (MR)

3.1.3. The sanding if the plywood is specified as follows:

- Not sanded (NS)
- Sanded one side (S1)
- Sanded two sides (S2)

3.2. Dimensions.
3.2.1. The dimensions and the number of plies in the plywood sheets must correspond to tables 1 and 2.

Table 1. Dimensions (millimeters)

Lengt(width) of the plywood sheets	Min(Max)Tolerance in mm
1200,1220,1250	+/- 3,0
1500,1525,1800,1830	+/- 4,0
2100,2135,2440,2500	+/- 4,0
2700,2745,3050,3600,3660	+/- 6,0

Note: Production of plywood is allowed in other dimensions corresponding with the terms of a contract.

Table 2. Thickness (millimeters)

Nominal thickness of plywood	Number of plies	Sanded Plywood Tolerance Min/Max(mm)	Sanded Plywood Thickness Variance(mm)	Unsanded Plywood Tolerance Min/Max (mm)	Unsanded Plywood Thickness Variance(mm)
3,0 mm	3-ply	+0,3/-0,4		+0,4/-0,3	
4,0 mm	3-ply	+0,3/-0,5		+0,8/-0,4	
6,5 mm	5-ply	+0,4/-0,5		+0,9/-0,4	1,0
9,0 mm	7-ply	+0,4/-0,6		+1,0/-0,5	
12,0 mm	9-ply	+0,5/-0,7	0,6	+1,1/-0,6	
15,0 mm	11-ply	+0,6/-0,8		+1,2/-0,7	
18,0 mm	13-ply	+0,7/-0,9		+1,3/-0,8	
21,0 mm	15-ply	+0,8/-1,0		+1,4/-0,9	1,5
24,0 mm	17-ply	+0,9/-1,1		+1,5/-1,0	
27,0 mm	19-ply	+1,0/-1,2	1,0	+1,6/-1,1	2,0
30,0 mm	21-ply	+1,1/-1,3		+1,7/-1,2	

Note: Production of plywood is allowed in other thickness and construction (number of plies) corresponding with the terms of a contract. The minimum and maximum variances may be determined by the following formula.

Sanded Plywood - maximum/minimum tolerance:

1. Maximum: Thick * 0.03 mm + 0.2 mm (12 mm*0.03 mm + 0.2 mm)=12 mm + 0.5 mm
2. Minimum: Thick * 0.03 mm + 0.4 mm (12 mm*0.03 mm + 0.4 mm)=12 mm - 0.7 mm

Unsanded Plywood - maximum/minimum tolerance:

1. Maximum: Thick * 0.03 mm + 0.8 mm (12 mm*0.03 mm + 0.8 mm)=12 mm + 1.1 mm
2. Minimum: Thick * 0.03 mm + 0.4 mm (12 mm*0.03 mm + 0.3 mm)=12 mm - 0.6 mm

3.2.2. Plywood panels must be cut at a right angle. Deviation must not exceed 2 mm per 1 lineal meter.
3.2.3. Deviation from square edges can not exceed 2mm per 1 lineal meter.
3.3. Making if plywood must include:

- Name of product
- Species of the face and core veneers
- Glue Bond marks
- Veneer grades for face and core
- Formaldehyde emission classification
- Type of surface treatment
- Dimensions
- Applicable GOST standard

Below is an example of markings in plywood. Birch plywood with core plies of birch veneer, water resistant, with a combination of face and core veneers I/III, with an emission class of E1, sanded in both sides, in 2440 mm long, 1220 mm wide and 9 mm thick is marked:

Birch plywood/birch, FK, I/III, E1, S2, 2440*1220*9 GOST 3916.1-96

4. TECHNICAL REQUIREMENTS

4.1. Characteristics
4.1.1. To produce face veneers for plywood, the following species can be used for the face veneer: birch, alder, maple, elm, beech, asp, poplar, lime. For core veneers, in addition to the ones just mentioned, the following can be used: pine, spruce, fir, larch and cedar.
The timber used to make veneers fir plywood determines the species of the plywood.
The plywood can be made of one or more than one species of wood, therefore it is either "homogeneous" or "combined".

If the number of veneer plies is even, the direction of fibers (grain) of the two middle plies must be parallel. Veneers, located symmetrically within the thickness of plywood, must be the same species and thickness.

The thickness of the veneer used for the faces must not exceed 3,5 mm. And for the thickness if core veneers must nit exceed 4 mm.
4.1.2. Wood and manufacturing defects exceeding limits stated in Table 3, are not allowed in face veneers.
4.1.3. Wood and manufacturing defects, exceeding the limits stated in Table 3, are allowed in core veneers, as long as they do not influence its integrity and dimensions. The requirements for quality and dimensions are specified in this standard.
4.1.4. The maximum amount of wood and manufacturing defects allowed in face veneers is indicated in Table 4.
4.1.5. The combination of face veneer grades is indicated in GOST 30427.
4.1.6. The face veneer of E grade can consist of 2 components with one splice joint in the middle of the panel. This applies only to widths up to 1525 mm.
If the width is over 1525 mm, the face veneer if E grade can consist of 3 components of equal width. The face veneer of I and II grades can be made from an unlimited number of veneer components.
For grades E, I, II veneer joints must be parallel to plywood edges. Veneers must be matched for color.
4.1.7. Plugs must be even with the surface, firmly bonded, must match the color of the face of the panel. The grain must also be parallel to the direction of the wood fibers (grain) on face veneer. For grades I and II the plugs must match the color of the wood.
Putty fills or repairs must match the color of the wood of a given grade. In addition, they must provide easy gluing, retain its color during plywood treatment and not crack while bending.
4.2. Strength and mechanical indices are stated in Table 5.
4.3. Formaldehyde content in plywood, depending in emission class, must meet the limits stated in Table 6.
4.4. The plywood is measured in either square meters or cubic meters. The volume of one panel is determined with a precision of up to 0.00001 m3. The volume of a few panels is determined with the precision of up to 0.5 m3. The squareness of a panel is measured with the precision of up to 0.01 m2. The squareness of a few panels in measured with a precision of up to 0.5 m2.
4.5. The marking is stamped with indelible paint on the back side of every panel stating plywood grade and inspector's number.
Marks of bundles or crates of plywood contain:

- Name of the country plywood-producer
- Name of mill-producer or its trade mark
- Conventional plywood marking
- Number of panels in the bundle
- National mark of conformity for certified production
- Transportation marking is in accordance with GOST 14192.

4.6. Packaging.
4.6.1. Plywood must be packed in bundles weighting no more than 1500 kgs. It has to be separated according to species, glue bond, grades, glue emission classes, types of surface treatments and dimensions. If parties mutually agree and in accordance with a sales contract, plywood can be packed in bundles or other weights.
4.6.2. If plywood is to be shipped to regions in the Extreme North or other difficult-to-reach regions, it has to be packed according to 4.6.1. and GOST 15848.

5. RULES OF ACCEPTANCE

5.1. Plywood is accepted in lots.
A lot consists of plywood of one species, one glue bond, one sort, one glue emission class one type of surface treatment and panel dimensions.
There should be one document for each lot, specifying quality and containing:

- Name of the country-producer
- Name of the mill-producer and (or) its trade mark
- Conventional plywood marking
- Volume or square meters of panels in lot
- Stamp of technical control
- National mark of conformity for a certified production

5.2. Quality and dimensions of panels are subject to random inspection. If specified in a sales contract (agreement), specific lots may be subject to full inspection.

In a random inspection, sheets are selected indiscriminately in accordance with GOST 18324 and confirming the quantities, mentioned in Table 7.
5.3. Shear, tensile and static bending strengths are checked fir plywood of every species, glue bond and number of plies at least once month. In accordance with sales contracts (agreements), it is permitted to select 0.1 % of sheets in every lot, but not less than one sheet.
5.4. Formaldehyde emission is checked every 30 days for FSF plywood mark and every 15 days for FK plywood mark. In accordance with terms of sales contract, a check may be done every 7 days.
5.5. A lot is considered to meet the requirement of the current standard and is accepted, if in the random inspection the following is confirmed:

- number of plywood sheets which are not meeting the requirements of the current standard due to dimensions, out of square, linear edges, wood and manufacturing defects is LESS or EQUAL to the accepted amount, which is stated in Table 7.
- all sheets of plywood must have no bubbles, no delamination and no trace of bark
- formaldehyde emission corresponds to the norms defined in Table 6

6. CONTROL METHODS

6.1. Selection of samples for strength and mechanical tests are done in accordance with GOST 9620. Selection of samples for formaldehyde emission tests are done in accordance with GOST 27678.
6.2. The length and width is measured at two points in the same panel, which are parallel to the edges and are located at least 100 mm from the edges. The measurements are done with a metal tape, which has an index error of 1 mm or less in accordance with GOST 7502. Measurements have to be taken twice and the actual length (width) of the sheet would be their average.
6.3. Thickness is measured at a distance of at least 100 mm from the edges. Thickness also has to be measured at the middle of each side of the panel with a caliper as per GOST 11358, or with a micrometer with a scale division of at least 0.1 mm in accordance with GOST 6507.
Measurements of thickness have to be taken 4 times and the actual thickness would be an average of those 4 measurements.
The difference in thickness in one panel of plywood is determined as a difference between the maximum and minimum thickness from these 4 measurements.
6.4. Moisture content is determined in accordance with GOST 9621.
6.5. Shear strength along the glue line is determined in accordance with GOST 9624.
6.6. Static bending strength is determined in accordance with GOST 9625
6.7. Tensile strength is determined in accordance with GOST 9662
6.8. Formaldehyde emission is determined in accordance with GOST 27678
6.9. Roughness of the surface is determined in accordance with GOST 15612
6.10. Wood and manufacturing defects are measured in accordance with GOST 30427
6.11. Deviation from linear edges of plywood panel is determined by measurements of the maximum gap between the panel edge and metallic square edge in accordance with GOST 8925 and within an index error of 0,2 mm.
6.12. Measurements for squareness are determined in accordance with GOST 30427.

7. TRANSPORTATION AND STORAGE

7.1. Plywood is transported in covered vehicles, in accordance with the transportation consignment rules for each given vehicle.
7.2. Transportation and storage of plywood, which is to be shipped to the Extreme North or difficult-to-access regions are done in accordance with GOST 15846.
7.3. Plywood is stored in horizontally stacked bundles, on pallets or on wooden pallets. The temperature of closed premises, in which the plywood is stored, should be between -400C to +50C. The humidity should not exceed 80%

8. PRODUCERS GUARANTEE

Producers guarantee that the plywood conforms with the current GOST, as well as with transportation and storage conditions.
FK plywood has a guarantee of 3 years and FSF plywood has a guarantee of 5 years from the day it was shipped.

TABLE 3. DESCRIPTION AND LIMITATIONS OF PLYWOOD DEFECTS

Description of defects as per GOST 30427	*E grade* plywood face veneers	*I grade (B in correspondence with GOST 10.55-71)* plywood face veneers	*II (BB in correspondence with GOST 10.55-71) grade* plywood face veneers	*III (CP in correspondence with GOST 10.55-71) grade* plywood face veneers	*IV(C in correspondence with GOST 10.55-71) grade* plywood face veneers
1.Pin knots	Not allowed	Max 3 per M2 allowed	Allowed	Allowed	Allowed
2.Sound lights and/or dark knots	Not allowed	Up to 5 per M2 max, 15mm diam. cracks no more than 0,5mm wide	Up to 10 per M2 max, 25mm diam. cracks no more than 1mm wide	Allow cracks not more than 1,5mm wide	Allow cracks not more than 1,5mm wide
3.Loose knots or with/without knot holes, worn holes in cluster or scattered	Not allowed	Up to 3 with max 6mm diam.	Up to 6 with max 6mm diam.	Up to 6 with max 6mm diam.	No limits with max 40 mm diam.
4.Tight cracks/splits	Not allowed	Up to 2 per 1M of plywood, max 200mm long	Up to 2 per 1M of plywood, max 200mm long	Allowed	Allowed
5.Wide cracks/splits	Not allowed	Not allowed	Up to 2 per 1M of plywood filled with putty max 200mm long	Up to 2 per 1M of plywood filled with putty max 600mm long and 5 mm wide	Allowed with limitations
6.Light Mold	Not allowed	Allowed	Allowed	Allowed	Allowed
7.Dark mold	Not allowed	Not allowed	General number allowed as per item 2 of present table	General number allowed as per item 2 of present table	Allowed
8.Deviation in wood structure	Allowed very insignificant,incidental disposition	Allowed	Allowed	Allowed	Allowed
9.Light color variation	Not allowed	Allowed, no more than 5% of the sheet surface	Allowed	Allowed	Allowed
10.Strong color variation	Not allowed	Not allowed	Not allowed	Not allowed	Allowed
11.Decay	Not allowed	Not allowed	Not allowed	Not allowed	Not allowed
12.Pinholes	Not allowed	General number allowed as per item 3 of present table	General number allowed as per item 3 of present table	General number allowed as per item 3 of present table	General number allowed as per item 3 of present table
13.Veneer overlap	Not allowed	Not allowed	Allowed no more than 100mm in quantity of no more than 1 piece for 1m of panel width	Allowed no more than 200mm in quantity of no more than 2 pieces for 1m of panel width	Allowed
14.Lack of veneer, defects of panel edges due to sanding or squaring	Not allowed	Allowed with a width of no more than 2mm	Allowed with a width of no more than 4mm	Allowed with a width of no more than 4mm	Allowed with a width of no more than 5mm
15.Presense of glue tape	Not allowed	Not allowed	Allowed in non-sanded plywood	Allowed in non-sanded plywood	Allowed in non-sanded plywood

16.Glue bleed through	Not allowed	Not allowed	Allowed no more than 2% of panel surface	Allowed no more than 5% of panel surface	Allowed
17.Scratches	Not allowed	Not allowed	Allowed	Allowed	Allowed
18.Indentations or imprints	Not allowed	Not allowed	Allowed if depth/height is in range of thickness variance	Allowed if depth/height is in range of thickness variance	Allowed
19.Torn Grain, Brashy Fibers	Not allowed	Not allowed	Allowed no more than 5% of panel surface	Allowed no more than 15% of panel surface	Allowed
20.Grinding	Not allowed	Not allowed	Not allowed	Not allowed	Allowed
21.Warp and twist	Does not apply to thickness under 6,5mm. If over 6,5mm then allowed with sag of no more than 15mm over 1M panel's diagonal length	Does not apply to thickness under 6,5mm. If over 6,5mm then allowed with sag of no more than 15mm over 1M panel's diagonal length	Does not apply to thickness under 6,5mm. If over 6,5mm then allowed with sag of no more than 15mm over 1M panel's diagonal length	Does not apply to thickness under 6,5mm. If over 6,5mm then allowed with sag of no more than 15mm over 1M panel's diagonal length	Does not apply to thickness under 6,5mm. If over 6,5mm then allowed with sag of no more than 15mm over 1M panel's diagonal length
22.Metal inclusions	Not allowed	Not allowed	Not allowed	Color metal staples are allowed	Color metal staples are allowed
23.Gap in slice joint	Not allowed	Not allowed	Allowed with width of no more than 1mm in 1 piece for 1M of panel sheet	Allowed with width of no more than 2 mm in 1 piece for 1M of panel sheet	Allowed
24.Delamination, bubbles, etc	Not allowed	Not allowed	Not allowed	Not allowed	Not allowed
25.Waviness(for sanded plywood), charter marks	Not allowed	Not allowed	Not allowed	Allowed	Allowed
26.Rough or torn grain	Roughness parameter(Rm) is per GOST 7016; 100 for sanded plywood and 200 for non-sanded	Roughness parameter(Rm) is per GOST 7016; 100 for sanded plywood and 200 for non-sanded	Roughness parameter(Rm) is per GOST 7016; 100 for sanded plywood and 200 for non-sanded	Roughness parameter(Rm) is per GOST 7016; 100 for sanded plywood and 200 for non-sanded	Roughness parameter(Rm) is per GOST 7016; 100 for sanded plywood and 200 for non-sanded
27.Wooden plugs	Not allowed	Not allowed	Allowed in repair up to 8 pieces for 1m2 of panel	Allowed with no limits	Allowed with no limits
28.Overlapped plugs	Not allowed	Not allowed	Allowed no more than 2 pieces per 1m2 of panel	Allowed	Allowed

Note:

- 1. Norm of manufacturing defects "lack of veneer" refers both to outer and core lines.
- 2. Wood and manufacturing defects which are not mentioned in Table 3 are not allowed.

TABLE 4

Grade of Face Veneer	Maximum amount of permitted defects for wood and manufacturing (in pieces)

E	No visible defects
I	3
II	6
III	9
IV	Amount of wood and manufacturing defects is unlimited. Limits on dimensions is in accordance with items 3,5,11,12,14,24 of Table 3

APPENDIX A

COMPARATIVE CHART OF GRADE MARKING IN THIS GOST, IN GOST 10.55-71 AND GOST 3916.1-89 GRADES

GOST 3916.1-96	GOST 10.55-71	GOST 3916.1-89
E	-	A
I	B	AB
II	BB	B
III	CP	BB
IV	C	C

TABLE 5

Index	Thickness(mm)	Glue bond	Birch	Alder Beech	Pine Larch Fir Silverfir Cedar	Lime Asp Poplar
Moisture content	3-30	FSF FK	5-10	5-10	5-10	5-10
Shear strength (MPa) not less than						
after boiling in water for 1 hour	3-30	FSF	1,5	1,2	1,0	0,6
after soaking in water for 24 hours		FK	1,5	1,0	1,0	0,6
Static bending strength of fibres (MPa) not less than	9-30	FSF	60	50	40	30
		FK	55,0	45,0	35,0	25,0
Tensile strength along fibers, MPa, no less than	3-6,5	FSF	40,0	40,0	40,0	40,0
		FK	30,0	30,0	30,0	30,0

Note: Shear strength along glue line of 1.2. Mpa is permitted in accordance with terms of a sales contract.

TABLE 6

Glue Emission Class	Formaldehyde content in 100 grams of dry plywood mass, in mg.
E1	Up to 10
E2	From 10 to 30

TABLE 7

Volume for the lot	Index of control on the items below(in panels)			
	3.2.1.; 3.2.3; 3.2.3; 4.1.2; 4.1.6; 4.1.7; 4.3			
	Selection Volume	Number for Acceptance	Selection Volume	Number for Acceptance
Up to 500	8	1	13	1
501 to 1200	13	1	20	2
1201 to 3200	13	1	32	3

3201 to 10000	20	2	32	3

vanity color



SUBMITTALS IDENTIFICATION SHEET

PROJECT: Wastewater Treatment Plant Upgrade
Iqaluit, Nunavut

NUNAMI
STANTEC LIMITED

1088C Noble House
Iqaluit NU
www.stantec.com

CONTRACTOR: Kudlik Construction Ltd, Project 2018-062

Telephone: 867-979-1166

E-mail: srousseau@kudlik.biz

SUBCONTRACTOR:

Person responsible:

Telephone: () E-mail:

PRODUCT SUBMITTED:

☐ As Specified

☐ Alternate

SUPPLIER or MANUFACTURER: ProBel

765 Westney Road South

Ajax, Ontario L1S 6Wi

Person responsible: Stephen Van Hoof

Telephone: 95-619-4832 E-mail:stephenh@pro-bel.ca

DESCRIPTION OF SUBMITTAL: snow guard

# of pages:

Reference to drawings:

Reference to specs:

Division: 07 Section: 07 46 19

REMARKS:

REVIEW AND COMMENTS (for use by Consultants):

STANTEC PROJECT #: 110126045

SUBMITTAL # SU-027 snow guards

This review by Stantec is for general conformance with the design concept of Stantec's design of the:

☑ Architectural ☐ Electrical
☐ Structural ☐ Other
☐ Mechanical

component(s) only and does not mean that Stantec has verified or approves the shop drawing(s). The Contractor remains solely responsible for the shop drawing(s) and this review by Stantec does not relieve the Contractor of the Contractor's responsibility for errors or omissions in the shop drawing(s) or for meeting all requirements of the contract documents. This review does not mean that Stantec approves the detailed design inherent in the shop drawing, responsibility for which shall remain with the Contractor submitting same, nor does this review mean that Stantec accepts any deviation of the shop drawing(s) from the contract documents. The Contractor is responsible for confirming all dimensions and correlating them at the job site, for all construction means, methods and techniques, and for coordination of construction work of all trades, including coordination of all shop drawings.

Stantec

☑ REVIEWED

☐ REVIEWED, AS NOTED

☐ REVISE AND RESUBMIT

☐ NOT REVIEWED

DATE 2018-08-16

BY TFlender

Review of this submission is for compliance with general intent of the contract. This review does not relieve the Sub-Contractor, Supplier or Manufacturer of responsibility for error or omissions in the submission or the responsibility of meeting all requirements of the contract documents. Any deviation from the contract documents initiated by the Sub-Contractor, Supplier or Manufacturer shall be at their sole risk. QUANTITIES AND DETAIL DIMENSIONS ARE THE SUB-CONTRACTORS OR SUPPLIERS RESPONSIBILITY. VERIFY DATA WITH FIELD DIMENSIONS.

SUBMITTAL TRACKING No.: **SU-027**

2018-08-15

VersaGard System Components:

- VersaGard Bracket
- DualGard™ 1-inch o.d. aluminum pipe
- DualClip™ II
- DualGard Splice
- DualGard Collar
- DualGard End Caps

Detailed VersaGard Information and File Downloads

VersaGard Brochure

VersaGard Installation

VersaGard DWG AutoCad 2D

VersaGard CAD PDF

Clamp to Seam Tool | **Snow Retention Calculator** | **Clamps & Brackets List** | **Case Studies**

© 2018 S-5!. All rights reserved. | **Privacy Policy** | **Terms of Use** | **WARNING!**

Terms of use, which are legally binding upon you, govern your use of this site and any products manufactured by Metal Roof Innovations, Ltd., and provide rules that prohibit unlawful use or copying of any part of this site. By using this site, you agree to abide by the **Terms of Use**.

ColorGard®

The only snow retention system good enough to be warranted for the life of the roof. Unlike other snow guards that yellow and fail over time, ColorGard's unsurpassed holding strength controls snow migration with a perfect color-match that lasts the life of the roof.

ColorGard® System Components

System Overview: ColorGard is manufactured from mill-finished, aircraft quality aluminum. It comes in 8-foot long sections, in punched or unpunched configurations. Splices are included with ColorGard for adjacent sections. For use with S-5!® heavy duty clamps, VersaBracket™ and CorruBracket™.

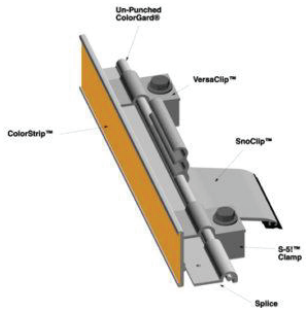

Punched Crossmember: Punched ColorGard is slotted every 4” (10.2 cm) on center for seams that are spaced accordingly, i.e. divisible by 4” (10.2cm). The slotted configuration works well with S-5! clamps.

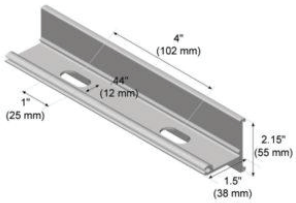

Unpunched Crossmember: Unpunched ColorGard is the most versatile and easy to install, when used with the S-5!® VersaClip™. Unpunched does not need holes, as the VersaClip accommodates any seam spacing. The unpunched configuration works well with VersaBracket. Unpunched is the right choice when the roof is laid out with untrue seam width or when the seam width is not divisible by 4. If in doubt, use unpunched.

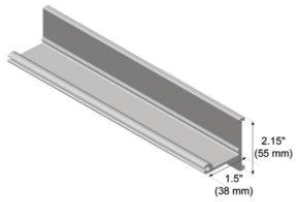

Splice: Included with crossmembers, use the splice to join two pieces of ColorGard together, ensuring continuous, unbroken protection. The dimple in the center is designed to provide a gap, allowing for expansion and contraction of the ColorGard sections.

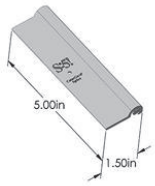

VersaClip: Available for purchase separately, VersaClip makes installation easy, as it simply slides on the ColorGard crossmember. It can be used with all S-5! clamps (one per clamp), and is optional with CorruBracket. VersaClip is not needed with VersaBracket. VersaClip is also handy when installing ColorGard askew, such as is required in the valleys between intersecting rooflines.

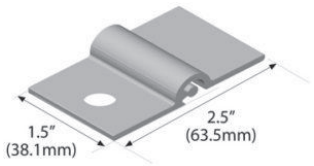

SnoClip: SnoClip™ is added to retard the migration of snow and ice beneath the crossmembers. Click here for detailed information on the SnoClip.



SnapClip™: SnapClip is a retrofitted component added to retard the migration of snow and ice beneath the crossmembers. Click here for detailed information on the SnapClip.

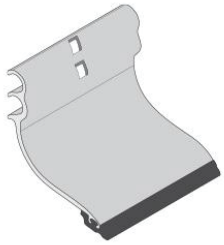

Color Strip: Not included, the color strip should be requested in 2” wide strips from the manufacturer of the roofing material in order to ensure a perfect color match for the life of the system.



For Use With Most S-5! Attachment Products



For detailed information and pricing on our full line-up of clamps.

To help you and your distributor design a ColorGard system for your purposes, check out our Web-based calculator.

Note: Do not use ColorGard with attachment spacing greater than 32” (81.3 cm). Custom ColorGard, Splice and SnoClips are available for seam spacing greater than 32” (81.3 cm). Please inquire through a distributor.

Detailed ColorGard® Information and File Downloads

- ColorGard Brochure
- ColorGard Components
- ColorGard Installation

S-5-E ColorGard Assembly DWG AutoCad 2D

S-5-N ColorGard Assembly DWG AutoCad 2D

S-5-S ColorGard Assembly DWG AutoCad 2D

S-5-T ColorGard Assembly DWG AutoCad 2D

S-5-U ColorGard Assembly DWG AutoCad 2D

S-5-Z ColorGard Assembly DWG AutoCad 2D

S-5-E ColorGard Assembly CAD PDF

S-5-N ColorGard Assembly CAD PDF

S-5-S ColorGard Assembly CAD PDF

S-5-T ColorGard Assembly CAD PDF

S-5-U ColorGard Assembly CAD PDF

S-5-Z ColorGard Assembly CAD PDF

SnoClip II [CCD] DWG

SnoClip II [CCD]

SnoClip III DWG AutoCad 2D

SnoClip III CAD PDF

SnapClip II Installation

SnapClip II [CCD] DWG

SnoClip II [CCD]

SnapClip III Installation

SnapClip III CAD PDF

Clamp to Seam Tool | **Snow Retention Calculator** | **Clamps & Brackets List** | **Case Studies**

PRODUCTS
PRODUCT SUPPORT
CALCULATOR
LOAD TEST RESULTS
CLAMP TO SEAM TOOL
ARCHITECTS
RESOURCES
CONTINUING ED
ABOUT US
NEWS & EVENTS

CLAMPS
BRACKETS
FAQS
CASE STUDIES
REVIEWS
HOME
WARRANTY
LEGAL AND IP
BLOG
CAREERS AT S-5!

WHERE TO BUY S-5!

DISTRIBUTOR LOGIN

CONTACT US

© 2018 S-5!. All rights reserved. | **Privacy Policy** | **Terms of Use** | **WARNING!**

Terms of use, which are legally binding upon you, govern your use of this site and any products manufactured by Metal Roof Innovations, Ltd., and provide rules that prohibit unlawful use or copying of any part of this site. By using this site, you agree to abide by the **Terms of Use**.

S-5-U Clamps

The S-5-U clamp is by far our most popular and most versatile clamp. It fits about 85% of the standing seam profiles manufactured in North America—including most structural and architectural profiles.

OVERVIEW S-5-U S-5-U MINI SEAM PROFILES

S-5-U Clamp

The S-5-U is perfect for S-5!® snow retention products and other heavy-duty applications.

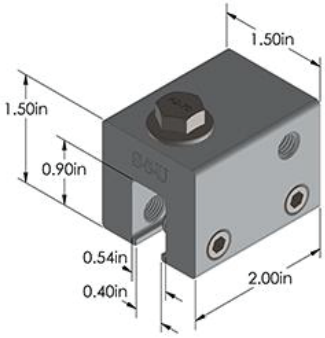

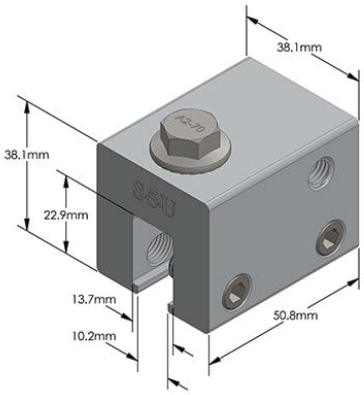

Installation is Easy

Installation is as simple as placing the clamp on the seam and tightening the round-point setscrews to the specified tension. Then, affix ancillary items using the bolt provided. Go to the tools page for information and tools available for properly attaching and tensioning S-5! clamps. Thanks to our round-tip setscrews, S-5! clamps do not pierce metal roof paneling, thereby protecting roof coatings and weather tightness warranties.



Load Test Results

S-5-U LOAD TEST RESULTS

This Clamp Includes the Following Hardware:

18-8 stainless steel, round point 3/8″ setscrews (2)
(3/16″ Allen drive)

M8-1.25 x 16mm (13mm Hex Flange Bolt)

3/16″ Allen screwgun driver (1 per box)

Packaging

Contact your distributor for pricing and ordering.

Product packages in boxes of 30 and cases of 150.
Broken box quantities may incur additional charges.

Setscrews, flanged bolts and a screwgun bit tip are included in each box.

Detailed S-5-U Information and File Downloads

- S-5-U Brochure
- S-5-U-S-E-B-V Installation
- S-5-U DWG AutoCad 2D Front
- S-5-U DWG AutoCad 2D Isometric
- S-5-U DWG AutoCad 2D Left
- S-5-U DWG AutoCad 2D Right
- S-5-U DWG AutoCad 2D Top
- S-5-U Metric [CCD]
- S-5-U STEP 3D
- S-5-U CAD PDF
- S-5-U Metric [CCD]

Clamp to Seam Tool | **Snow Retention Calculator** | **Clamps & Brackets List** | **Case Studies**

PRODUCTS
PRODUCT SUPPORT
CALCULATOR
LOAD TEST RESULTS
CLAMP TO SEAM TOOL
CLAMPS
BRACKETS
FAQS

ARCHITECTS
RESOURCES
CONTINUING ED
ABOUT US
NEWS & EVENTS
WARRANTY
LEGAL AND IP
BLOG

MADE IN THE USA

WHERE TO BUY S-5!

DISTRIBUTOR LOGIN

CONTACT US

CASE STUDIES
CAREERS AT S-5!
REVIEWS
HOME

© 2018 S-5!. All rights reserved. | **Privacy Policy** | **Terms of Use** | **WARNING!**

Terms of use, which are legally binding upon you, govern your use of this site and any products manufactured by Metal Roof Innovations, Ltd., and provide rules that prohibit unlawful use or copying of any part of this site. By using this site, you agree to abide by the **Terms of Use**.

ColorGard®

The only snow retention system good enough to be warranted for the life of the roof. Unlike other snow guards that yellow and fail over time, ColorGard's unsurpassed holding strength controls snow migration with a perfect color-match that lasts the life of the roof.

OVERVIEW | PUNCHED COLORGARD | UNPUNCHED COLORGARD | VERSACLIP | SNOCLIP II | SNOCLIP III
SNAPCLIP II | SNAPCLIP III | COMPONENTS
PACKAGING | INSTALLATION | WARRANTY | EXPOSED FASTENED

Packaging

Contact your distributor for pricing and ordering.

Product packages in boxes of 55 and cases of 220.
Broken box quantities may incur additional charges.

Setscrews, flanged bolts and a screwgun bit tip are included in each box.

Detailed SnoClip II Information and File Downloads

SnoClip II [CCD] DWG

SnoClip II [CCD]

Clamp to Seam Tool | Snow Retention Calculator | Clamps & Brackets List | Case Studies

PRODUCTS
PRODUCT SUPPORT
CALCULATOR
LOAD TEST RESULTS
CLAMP TO SEAM TOOL
CLAMPS
BRACKETS
FAQS
CASE STUDIES
REVIEWS
HOME

ARCHITECTS
RESOURCES
CONTINUING ED
ABOUT US
NEWS & EVENTS
WARRANTY
LEGAL AND IP
BLOG
CAREERS AT S-5!

WHERE TO BUY S-5!
DISTRIBUTOR LOGIN
CONTACT US

© 2018 S-5!. All rights reserved. | **Privacy Policy** | **Terms of Use** | **WARNING!**

Terms of use, which are legally binding upon you, govern your use of this site and any products manufactured by Metal Roof Innovations, Ltd., and provide rules that prohibit unlawful use or copying of any part of this site. By using this site, you agree to abide by the **Terms of Use**.

SUBMITTALS IDENTIFICATION SHEET

PROJECT: Wastewater Treatment Plant Upgrade
Iqaluit, Nunavut

NUNAMI
STANTEC LIMITED
1088C Noble House
Iqaluit NU
www.stantec.com

CONTRACTOR: Kudlik Construction Ltd, Project 2018-062

Telephone: 867-979-1166

E-mail: srousseau@kudlik.biz

SUBCONTRACTOR:

Person responsible:

Telephone: () E-mail:

PRODUCT SUBMITTED:

☐ As Specified

☐ Alternate

SUPPLIER or MANUFACTURER: Sign

Telephone: 95-619-4832 E-mail:

DESCRIPTION OF SUBMITTAL: sign

# of pages:

Reference to drawings:

Reference to specs:

Division: Section:

REMARKS:

REVIEW AND COMMENTS (for use by Consultants):

STANTEC PROJECT #: 110126045

SUBMITTAL # SU-028 Project Sign

This review by Stantec is for general conformance with the design concept of Stantec's design of the:

☐ Architectural ☐ Electrical
☐ Structural ☒ Other XX
☐ Mechanical

component(s) only and does not mean that Stantec has verified or approves the shop drawing(s). The Contractor remains solely responsible for the shop drawing(s) and this review by Stantec does not relieve the Contractor of the Contractor's responsibility for errors or omissions in the shop drawing(s) or for meeting all requirements of the contract documents. This review does not mean that Stantec approves the detailed design inherent in the shop drawing, responsibility for which shall remain with the Contractor submitting same, nor does this review mean that Stantec accepts any deviation of the shop drawing(s) from the contract documents. The Contractor is responsible for confirming all dimensions and correlating them at the job site, for all construction means, methods and techniques, and for coordination of construction work of all trades, including coordination of all shop drawings.

Stantec

☒ REVIEWED

☐ REVIEWED, AS NOTED

☐ REVISE AND RESUBMIT

☐ NOT REVIEWED

DATE September 12, 2018

BY

Review of this submission is for compliance with general intent of the contract. This review does not relieve the Sub-Contractor, Supplier or Manufacturer of responsibility for error or omissions in the submission or the responsibility of meeting all requirements of the contract documents. Any deviation from the contract documents initiated by the Sub-Contractor, Supplier or Manufacturer shall be at their sole risk. QUANTITIES AND DETAIL DIMENSIONS ARE THE SUB-CONTRACTORS OR SUPPLIERS RESPONSIBILITY. VERIFY DATA WITH FIELD DIMENSIONS.

SUBMITTAL TRACKING No.: **SU-028 rev 1**

2018-09-04

8'

4'

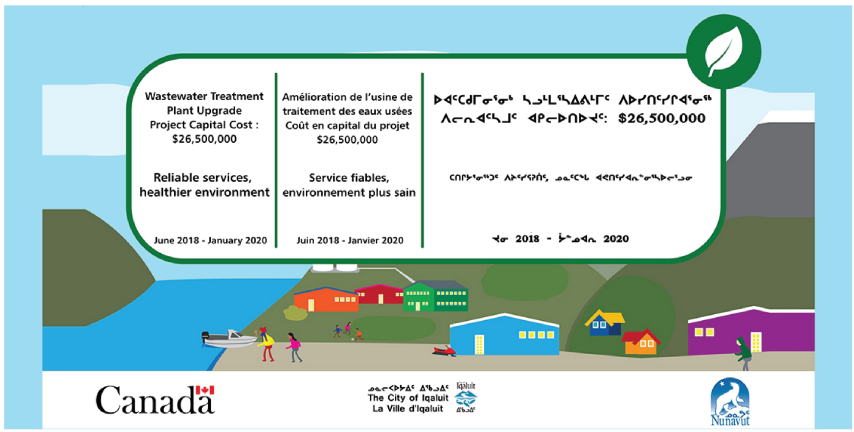

Plywood
3/4"

Digital printing vinyl with laminated protector
Applied on plywood

APRIL
Enseignes - Lettrage - Signalisation
2025 rue Fortier, Jonquière, Qc. G7X 4K3
Tél.: 418-542-1733 Fax: 418-542-1031
www.enseignesapril.ca

☐ Approuvé ☐ Correction

Client : Pilitak Entreprises LTD.

Représentant : Claude April

Date : Aout 2018

TOUTES NOS ENSEIGNES SONT CERTIFIÉES

AVIS

Dernière révision :

SUBMITTALS IDENTIFICATION SHEET

PROJECT: Wastewater Treatment Plant Upgrade
Iqaluit, Nunavut

NUNAMI
STANTEC LIMITED
1088C Noble House
Iqaluit NU
www.stantec.com

CONTRACTOR: Kudlik Construction Ltd, Project 2018-062

Telephone: 867-979-1166

E-mail: srousseau@kudlik.biz

SUBCONTRACTOR:

Person responsible:

Telephone: () E-mail:

PRODUCT SUBMITTED:

☑ As Specified

☐ Alternate

SUPPLIER or MANUFACTURER: Atlas Book Bindery

12945 146 Street Edmonton AB

Person responsible:

Telephone: 780-452-9130 E-mail: info@atlasbookbindery.com

DESCRIPTION OF SUBMITTAL: binder

# of pages:

Reference to drawings:

Reference to specs:

Division: 01 Section: 01 78 00

REMARKS:

please choose color for binder
please confirm number of hard copy (see Glenn if Ipad is re

REVIEW AND COMMENTS (for use by Consultants):

STANTEC PROJECT #: 110126045

SUBMITTAL # SU-030

This review by Stantec is for general conformance with the design concept of Stantec's design of the:

☐ Process ☐ Electrical
☐ Structural ☑ Other
☐ Mechanical General

component(s) only and does not mean that Stantec has verified or approves the shop drawing(s). The Contractor remains solely responsible for the shop drawing(s) and this review by Stantec does not relieve the Contractor of the Contractor's responsibility for errors or omissions in the shop drawing(s) or for meeting all requirements of the contract documents. This review does not mean that Stantec approves the detailed design inherent in the shop drawing, responsibility for which shall remain with the Contractor submitting same, nor does this review mean that Stantec accepts any deviation of the shop drawing(s) from the contract documents. The Contractor is responsible for confirming all dimensions and correlating them at the job site, for all construction means, methods and techniques, and for coordination of construction work of all trades, including coordination of all shop drawings.

Stantec

☐ REVIEWED

☑ REVIEWED, AS NOTED

☐ REVISE AND RESUBMIT

☐ NOT REVIEWED

DATE October 31, 2018

BY Zachary Paquin

Please use OBV 460 for Binder Color.
For Manual copies, refer to Glenn's email sent on Sept 17, 2018 (attached)

Review of this submission is for compliance with general intent of the contract. This review does not relieve the Sub-Contractor, Supplier or Manufacturer of responsibility for error or omissions in the submission or the responsibility of meeting all requirements of the contract documents. Any deviation from the contract documents initiated by the Sub-Contractor, Supplier or Manufacturer shall be at their sole risk. QUANTITIES AND DETAIL DIMENSIONS ARE THE SUB-CONTRACTORS OR SUPPLIERS RESPONSIBILITY. VERIFY DATA WITH FIELD DIMENSIONS.

SUBMITTAL TRACKING No.: **SU-030**

2018-10-23

From: Prosko, Glenn
Sent: Monday, September 17, 2018 9:34 AM
To: 'Sandra Rousseau' <srousseau@gely.biz>
Cc: Paquin, Zach <Zach.Paquin@stantec.com>
Subject: RE: binder for O&M manual

Based on Maria's response you will need:

Primary Only (Temporary Manual this fall)

- 1 hard copy in temporary binders (does not need to be the final embossed binders as you would not want to do that until you have all the secondary info too)
- 1 Tablet for them to try so yes please go ahead and purchase
- 1 electronic copy

Primary and Secondary (Final Manual next fall)
Needs to be confirmed next year but likely will be:

- 1 hard copy in permanent binders
- 2 Tablets (update tablet above and purchase 1 more)
- Any additional tablets requested at $600 each
- 1 electronic copy

Our plan for now, call if you have any questions

Glenn

From: Sandra Rousseau <srousseau@gely.biz>
Sent: Monday, September 17, 2018 8:18 AM
To: Prosko, Glenn <Glenn.Prosko@stantec.com>
Cc: Paquin, Zach <Zach.Paquin@stantec.com>
Subject: RE: binder for O&M manual

For the primary we use tablet?
I will buy it if yes
Sandra

Sandra Rousseau P.Eng.
Project Manager / Gestionnaire de projets
Phone : 418-871-3368 ext 257

Wastewater Treatment Plant Upgrade

Iqaluit, NUNAVUT

SUBMITTED BY :

Kudlik Construction Ltd

PROJECT NUMBER :

CITY OF IQALUIT : IQA15-4964-C

NUNAMI STANTEC: 110126045

KUDLIK CONSTRUCTION: 2018062

PROJECT RECORD DOCUMENTS

ARCHITECTURE AND STRUCTURE

VOLUME 1

PROJECT RECORD DOCUMENTS

ARCHITECTURE AND STRUCTURE

VOLUME 1

Wastewater Treatment Plant Upgrade

Iqaluit, NUNAVUT

SUBMITTED BY :

PROJECT NUMBER :

CITY OF IQALUIT : IQA15-4964-C
NUNAMI STANTEC: 110126045
KUDLIK CONSTRUCTION: 2018062

Wastewater Treatment Plant Upgrade

Iqaluit, NUNAVUT

SUBMITTED BY :

Kudlik Construction Ltd

PROJECT NUMBER :

CITY OF IQALUIT : IQA15-4964-C

NUNAMI STANTEC: 110126045

KUDLIK CONSTRUCTION: 2018062

PROJECT RECORD DOCUMENTS

ARCHITECTURE AND STRUCTURE

VOLUME 2

PROJECT RECORD DOCUMENTS

ARCHITECTURE AND STRUCTURE

VOLUME 2

Wastewater Treatment Plant Upgrade

Iqaluit, NUNAVUT

SUBMITTED BY :

PROJECT NUMBER :

CITY OF IQALUIT : IQA15-4964-C
NUNAMI STANTEC: 110126045
KUDLIK CONSTRUCTION: 2018062

SUBMITTALS IDENTIFICATION SHEET

PROJECT: Wastewater Treatment Plant Upgrade
Iqaluit, Nunavut

NUNAMI
STANTEC LIMITED
1088C Noble House
Iqaluit NU
www.stantec.com

CONTRACTOR: Kudlik Construction Ltd, Project 2018-062

Telephone: 867-979-1166

E-mail: srousseau@kudlik.biz

SUBCONTRACTOR:

Person responsible:

Telephone: () E-mail:

PRODUCT SUBMITTED:

☐ As Specified

☐ Alternate

SUPPLIER or MANUFACTURER: April

2025 rue Fortier, Jonquière, Qc G7X 4K3

Telephone: 418-542-1733 E-mail:

DESCRIPTION OF SUBMITTAL: lagoon signage

# of pages:

Reference to drawings:

Reference to specs:

Division: Section:

REMARKS:

Lagoon signage

REVIEW AND COMMENTS (for use by Consultants):

STANTEC PROJECT #: 110126045

SUBMITTAL # SU-031 Lagoon Signage

This review by Stantec is for general conformance with the design concept of Stantec's design of the:

☐ Process ☐ Electrical
☐ Structural ☑ Other
☐ Mechanical

component(s) only and does not mean that Stantec has verified or approves the shop drawing(s). The Contractor remains solely responsible for the shop drawing(s) and this review by Stantec does not relieve the Contractor of the Contractor's responsibility for errors or omissions in the shop drawing(s) or for meeting all requirements of the contract documents. This review does not mean that Stantec approves the detailed design inherent in the shop drawing, responsibility for which shall remain with the Contractor submitting same, nor does this review mean that Stantec accepts any deviation of the shop drawing(s) from the contract documents. The Contractor is responsible for confirming all dimensions and correlating them at the job site, for all construction means, methods and techniques, and for coordination of construction work of all trades, including coordination of all shop drawings.

Stantec

☑ REVIEWED

☐ REVIEWED, AS NOTED

☐ REVISE AND RESUBMIT

☐ NOT REVIEWED

DATE January 29, 2019

BY Zachary Paquin

Review of this submission is for compliance with general intent of the contract. This review does not relieve the Sub-Contractor, Supplier or Manufacturer of responsibility for error or omissions in the submission or the responsibility of meeting all requirements of the contract documents. Any deviation from the contract documents initiated by the Sub-Contractor, Supplier or Manufacturer shall be at their sole risk. QUANTITIES AND DETAIL DIMENSIONS ARE THE SUB-CONTRACTORS OR SUPPLIERS RESPONSIBILITY. VERIFY DATA WITH FIELD DIMENSIONS.

SUBMITTAL TRACKING No.: **SU-031**

2019-01-21

VUE ARRIÈRE / BACK VIEW

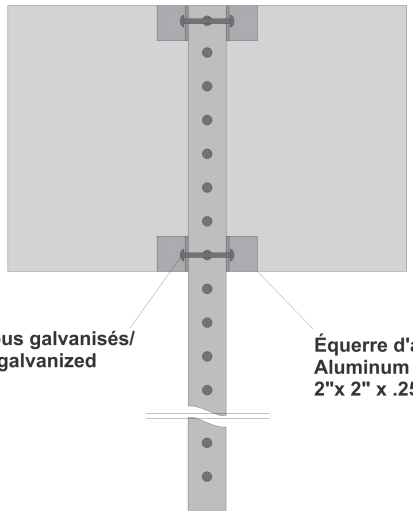

Boulons et écrous galvanisés/
Bolts and Nuts galvanized

Équerre d'aluminium/
Aluminum Square
2"x 2" x .250"

VUE AVANT / FRONT VIEW

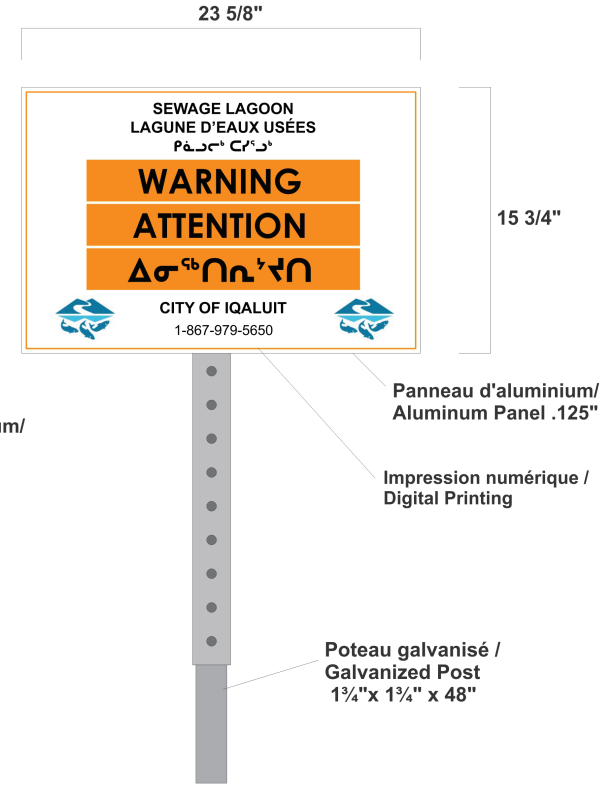

Panneau d'aluminium/
Aluminum Panel .125"

Impression numérique /
Digital Printing

Poteau galvanisé /
Galvanized Post
1¾"x 1¾" x 48"

VUE DE HAUT / TOP VIEW



APRIL
Enseignes - Lettrage - Signalisation
2025 rue Fortier, Jonquière, Qc. G7X 4K3
Tél.: 418-542-1733 Fax: 418-542-1031
www.enseignesapril.ca

☐ Approuvé ☐ Correction

Client : City of Iqaluit

Représentant : Claude April

Graphiste : Yann Allard

Date : 21 janvier 2019

TOUTES NOS ENSEIGNES SONT CERTIFIÉES

AVIS
CE DOCUMENT EST LA PROPRIÉTÉ EXCLUSIVE DE LES ENSEIGNES APRIL. TOUTE REPRODUCTION OU UTILISATION EN TOUT OU EN PARTIE SUR DIRECTEMENT INTERDITE ET PROTÉGÉE PAR LA LOI SUR LES DROITS D'AUTEURS. ARTICLE 17 CHAP. 55. LE CONTRÔLEMANT EST PASSIBLE DE POURSUITES ET SANCTIONS EN VERTU DE LA DITE LOI.

Dernière révision :

SUBMITTALS IDENTIFICATION SHEET

PROJECT: Wastewater Treatment Plant Upgrade Iqaluit, Nunavut	NUNAMI STANTEC LIMITED 1088C Noble House Iqaluit NU www.stantec.com
CONTRACTOR: Kudlik Construction Ltd, Project 2018-062	
Telephone: 867-979-1166	
E-mail: srousseau@kudlik.biz	
SUBCONTRACTOR: Toiture Gilles Veilleux	**PRODUCT SUBMITTED:**
Person responsible: Carl Fleury	☐ As Specified
Telephone: (418)276-1783 E-mail:	☐ Alternate
SUPPLIER or MANUFACTURER:	**REVIEW AND COMMENTS (for use by Consultants):**
	NOTE: each shop drawing within this package is stamped separately. Please review each section. Stantec Architecture Ltd. May 15, 2019
Telephone: E-mail:	
DESCRIPTION OF SUBMITTAL: new roof	
# of pages:	
Reference to drawings:	
Reference to specs: Division: Section:	
REMARKS:	

Review of this submission is for compliance with general intent of the contract. This review does not relieve the Sub-Contractor, Supplier or Manufacturer of responsibility for error or omissions in the submission or the responsibility of meeting all requirements of the contract documents. Any deviation from the contract documents initiated by the Sub-Contractor, Supplier or Manufacturer shall be at their sole risk. QUANTITIES AND DETAIL DIMENSIONS ARE THE SUB-CONTRACTORS OR SUPPLIERS RESPONSIBILITY. VERIFY DATA WITH FIELD DIMENSIONS.

SUBMITTAL TRACKING No.: **SU-032**	2019-05-14

CGC Building Envelope Solutions

STANTEC PROJECT #: 110126045

SUBMITTAL # SU-032 - fiberglass reenforced gypsum

This review by Stantec is for general conformance with the design concept of Stantec's design of the:

- ☑ Architectural
- ☐ Structural
- ☐ Mechanical
- ☐ Electrical
- ☐ Other

component(s) only and does not mean that Stantec has verified or approves the shop drawing(s). The Contractor remains solely responsible for the shop drawing(s) and this review by Stantec does not relieve the Contractor of the Contractor's responsibility for errors or omissions in the shop drawing(s) or for meeting all requirements of the contract documents. This review does not mean that Stantec approves the detailed design inherent in the shop drawing, responsibility for which shall remain with the Contractor submitting same, nor does this review mean that Stantec accepts any deviation of the shop drawing(s) from the contract documents. The Contractor is responsible for confirming all dimensions and correlating them at the job site, for all construction means, methods and techniques, and for coordination of construction work of all trades, including coordination of all shop drawings.

Stantec

- ☑ REVIEWED
- ☐ REVIEWED, AS NOTED
- ☐ REVISE AND RESUBMIT
- ☐ NOT REVIEWED

DATE 2019-05-15

BY TFlender

CGC GLA REGUL



NEW, IMPROVED FACER-MAT DESIGN

Quality, high-performance sheathing for warranted protection from the elements

- Improved coated fiberglass facer mat to maximize coverage of air/water barrier systems
- Treated gypsum core, combined with fiberglass face and back, offers exceptional water resistance
- Scores and snaps easily for quick installation
- For use in most exterior systems when properly detailed by exterior finish manufacturer
- Meets or exceeds the requirements of ASTM C1177

DESCRIPTION

CGC Securock® Brand Glass-Mat Sheathing is a noncombustible, moisture and mould-resistant panel designed for use under exterior claddings where conventional gypsum sheathing products have traditionally been used, such as brick veneer, properly detailed Exterior Insulation Finish Systems (EIFS), clapboard siding, panel siding, shingle siding, shake siding and conventional stucco.

ADVANTAGES

Mould-Resistant: High resistance to mould and mildew and scores a 10 (highest) when tested in accordance with ASTM D3273.

Resists Water: Glass-mat sheathing facer on both sides sheds water.

Quick, Dry Installation: Quick score and snap, no sawing or special tools, and rapid screw or nail attachment.

Exposure: Can be exposed to weather for up to 12 months after application.

Warranted Performance: CGC Securock Glass-Mat Sheathing is guaranteed for five years against manufacturing defects and for 12 months of weather exposure.

LIMITATIONS

1. CGC Securock Glass-Mat Sheathing shall not be used as a nail base for exterior cladding.
2. Specific requirements regarding framing spacing, fastener spacing and fastener specifics to provide required lateral wind-load resistance are the responsibility of the design professional. (Refer to technical data and specifications on the following pages.)
3. CGC Securock Glass-Mat Sheathing offers resistance to weather but is not intended for constant exposure to water. Protect this and all similar materials from the eroding effects of cascading water. If extreme weather conditions are possible, the design professional should consider recommending that panel joints be treated or a weather-resistant barrier be installed.
4. Not recommended for lamination to masonry surfaces. Use furring strips or framing.
5. Maximum stud spacing is 610 mm (24") o.c.
6. CGC Securock Glass-Mat Sheathing is not a finished surface.
7. CGC Securock Glass-Mat Sheathing is not intended for tile applications.
8. Gypsum Sheathing is not recommended where it will be in contact with surfaces or exposed to temperatures exceeding 52˚C (125˚F).
9. For protected exterior ceiling and soffit applications, the panels must be protected from direct exposure to weather. Please refer to the *CGC Gypsum Construction Handbook* for installation recommendations.

CGC IT'S YOUR WORLD. BUILD IT.

PRODUCT DATA

Dimensions: 12.7 mm (1/2") or 15.9 mm (5/8") thick, 1220 mm (48") wide, 2440 mm, 2475 mm, 3050 mm (8', 9' and 10') long. Other sizes available on special order. Consult your CGC sales office or representative for more information.

Weight: Approximately 9.8 kg/m² (2.0 lbs./sq.ft.) for 12.7 mm (1/2") thickness, 13.2 kg/m² (2.7 lbs./sq.ft.), for 15.9 mm (5/8") thickness.

Edge Configuration: Square edges.

Compliance With Standards: Meets or exceeds the physical property requirements of ASTM C1177. 15.9 mm (5/8") CGC Securock Glass-Mat Sheathing is cUL Classified as to fire resistance, surface-burning characteristics and core combustibility. ICC ES Evaluation Report ESR 3044.

Fire Performance: CGC Securock Glass-Mat Sheathing has a noncombustible core when tested in accordance with ASTM E136 or CAN/ULC S114. Surface-burning characteristics—Flame spread 0, smoke developed 0, when tested in accordance with ASTM E84 or CAN/ULC S102. Fire resistance—15.9 mm (5/8") panels meet the requirements of Type X as defined in ASTM C1396 and ASTM C1177 when tested in accordance with ASTM E119 or CAN/ULC S101. cUL Classified as to fire resistance. See Underwriters Laboratories Fire Resistance Directory for specific designs.

Tensile Bond: Exceeds 103 kPa (15 psi) requirements for both cementitious and acrylic adhesives per ASTM C297.

Physical Properties Per ASTM C1177	12.7 mm (1/2") CGC Securock Glass-Mat Sheathing	15.9 mm (5/8") CGC Securock® Brand Glass-Mat Sheathing Firecode® X
Weight, nominal, kg/m² (lbs./sq. ft.)	9.8 kg/m² (2.0 lbs./sq. ft.)	13.2 kg/m² (2.7 lbs./sq. ft.)
Linear expansion with moisture change, mm/mm %RH (in/in %RH)	6.25×10^{-6}	6.25×10^{-6}
Coefficient of thermal expansion, mm/mm/°C (in/in/°F)	15.3×10^{-6} (8.5×10^{-6})	15.3×10^{-6} (8.5×10^{-6})
Flexural strength, parallel, N (lbf.)	>356 (80)	>444 (100)
Flexural strength, perpendicular, N (lbf.)	>476 (107)	>654 (147)
R-Value, ft²•°F•hr/BTU	0.07 (0.40)	0.09 (0.50)
Combustibility	Noncombustible	Noncombustible
ASTM D3273 score	10/10	10/10
Permeance, perms	1666 (29)	1609 (28)
Surface burning characteristics (per ASTM E84 or CAN/ULC-S102): flame spread/smoke developed	0/0	0/0
Humidified deflection, mm (inches)	<6 mm (2/8")	<3 mm (1/8")
Bending radius (dry)*	2.7 m (9')	2.7 m (9')

*Due to the variability in environmental conditions of each installation, the framing and fastener spacing of curved walls should be reduced as the radius approaches the minimum allowed. At the minimum radius, it is recommended that fastener and frame spacing be 152 mm (6") o.c.

Allowable Uniform Wind Load kPa (psf) for 12.7 mm (1/2")-Thick Panels

Frame Spacing	305 mm (12")			406 mm (16")			610 mm (24")		
Fastener Spacing	102 (4)	152 (6)	203 (8)	102 (4)	152 (6)	203 (8)	102 (4)	152 (6)	203 (8)
Allowable Pressure	3.6 (75)	2.2 (46)	1.6 (34)	2.4 (51)	1.6 (34)	1.2 (26)	1.2 (26)	0.91 (19)	0.77 (16)

Allowable Uniform Wind Load kPa (psf) for 15.9 mm (5/8")-Thick Panels

Frame Spacing	305 mm (12")			406 mm (16")			610 mm (24")		
Fastener Spacing	102 (4)	152 (6)	203 (8)	102 (4)	152 (6)	203 (8)	102 (4)	152 (6)	203 (8)
Allowable Pressure	5.12 (107)	3.2 (67)	2.4 (50)	3.6 (75)	2.4 (50)	1.8 (38)	1.6 (34)	1.3 (27)	1.1 (24)

Notes: Applicable for both steel and wood framing. The values in this table are based on testing per ASTM E330 and represent the capacity of the sheathing to resist flexural failure or fastener pull-through with a 3.0 factor of safety. Capacities are based on a minimum fastener head diameter of 8 mm (0.325") (#6 bugle head screw). The withdrawal resistance of fasteners from framing is different on several factors, including but not limited to fastener type, fastener length and framing properties. The specification of fasteners is the responsibility of the Designer of Record. Manufacturer's recommendations are given below. These capacities assume continuous support of each stud flange over the full length of the sheathing panel. Allowable pressures are based on a maximum deflection limitation of L/360. Consult CGC representative for higher deflection limitations. Allowable pressure values are for short-term wind loads. Framing design is independent of these values. The design capacities of assemblies constructed with pneumatically driven fasteners are beyond the scope of this data sheet.

PRODUCT DATA CONT.

Moisture and Mould Resistance: CGC Securock® Brand Glass-Mat Sheathing resists moisture and mould and complies with ASTM C1177 for water resistance. In independent lab tests conducted on CGC Securock Glass-Mat Sheathing at the time of manufacture per ASTM D3273, *Standard Test Method for Resistance to Growth of Mold on the Surface of Interior Coatings in an Environmental Chamber*, the panel score was 10.

This ASTM lab test may not accurately represent the mould performance of building materials in actual use. Given unsuitable project conditions during storage, installation or after completion, any building material can be overwhelmed by mould. To manage the growth of mould, the best and most cost-effective strategy is to protect building products from water exposure during storage and installation and after completion of the building. This can be accomplished by using good design and construction practices.

APPLICATION TO WOOD STUD WALLS FOR RACKING RESISTANCE

For resisting wind and seismic loads: 12.7 mm (1/2")-thick CGC Securock Glass-Mat Sheathing will provide an allowable racking resistance of (1.8 kN/m) 122 plf when sheathing is attached to wood framing spaced 406 mm (16") o.c. max. Application shall be by the use of nails: 11 gauge, 11 mm (7/16") diameter head, 38 mm (1-1/2") long, hot-dipped galvanized roofing nails, or #6 – 32 mm (1-1/4") long corrosion-resistant bugle head screws. 15.9 mm (5/8")-thick CGC Securock Glass-Mat Sheathing will provide an allowable racking resistance of 2.0 kN/m (138 plf) when sheathing is attached to wood framing spaced 610 mm (24") o.c. max. Application shall be by the use of nails: 11 gauge, 11 mm (7/16") diameter head, 44 mm (1-3/4") long, hot-dipped galvanized roofing nails, or #6 – 41 mm (1-5/8") long corrosion-resistant bugle head screws. The CGC Securock Glass-Mat Sheathing panels shall be applied solidly to the wall framing with the long edges of the panels parallel to the framing with all edges backed by framing members. Design capacities are based on a maximum fastener spacing of 102 mm (4") o.c. around the perimeter of the sheathing panels and 203 mm (8") o.c. along the intermediate framing members. The maximum height-length ratio shall not exceed 1.5:1 to be considered a shear wall segment. Studs and plates shall be anchored to resist forces. Shear walls using CGC Securock Glass-Mat Sheathing shall not be used to resist forces imposed by masonry or concrete walls. The design capacities of assemblies constructed with pneumatically driven fasteners are beyond the scope of this data sheet.

Note: Local code requirements may limit the racking resistance values to a prescribed load; be sure to check with the authority having jurisdiction for the correct limitations when designing the racking resistance.

INSTALLATION

CGC Securock Glass-Mat Sheathing shall be installed in accordance with EWB2451 CGC Securock Glass-Mat Sheathing Installation Guide, GA-253 *Application of Gypsum Sheathing, and ASTM C1280 Standard Specification for Application for Application of Gypsum Panel Products for Use as Sheathing.* If extreme weather conditions are possible, the design professional should consider recommending that panel joints be treated or a weather-resistant barrier be installed.

SPECIFICATIONS

PART 1: GENERAL

1.1 Scope
Specify to meet project requirements.

1.2 Delivery and Storage of Materials
All materials shall be stored in an enclosed shelter providing protection from damage and exposure to the elements. Damaged or deteriorated materials shall be removed from the premises. Prior to installation, panels should be stacked flat (unless the contractor in charge of site safety directs otherwise to avoid point overloading of the structure or a tripping hazard) and reasonably protected from the elements.

Warning: Store all CGC Securock Glass-Mat panels flat. Panels are heavy and can fall over, causing serious injury or death. Do not move unless authorized.

PART 2: PRODUCTS

A. CGC Securock Glass-Mat Sheathing—12.7 mm (1/2") 15.9 mm (5/8") thick x 1220 mm (48") wide x 2440 mm–3050 mm (8'–10') long with square edges.

B. Nails—38 mm (1-1/2") 44 mm (1-3/4"), 11-gauge hot-dipped galvanized roofing nails, 11 mm (7/16") diameter head (minimum).

C. Screws—32 mm (1-1/4") 41 mm (1-5/8") #6 bugle head corrosion-resistant fasteners. Where sheet-type weather-resistive barriers or self-adhering membranes are placed over the sheathing, corrosion resistance shall be equal to or greater than a hot-dipped galvanized coating of 460 g of zinc per square metre (1.5 ounces of zinc per square foot) of surface area. Where liquid or fluid-applied air and water barriers are used, or where no sheet-type weather-resistive barrier is used over the sheathing, screws shall have a corrosion resistance of more than 800 hours per ASTM B117. Stainless steel fasteners shall be used in coastal or aggressive environments. Consult the building code for other requirements.

SPECIFICATIONS CONT.

PART 3: EXECUTION

3.1 Walls— Sheathing

A. Apply weather-resistive or water barriers and flashing as required by and in accordance with the applicable local code requirements and the recommendations of the exterior cladding manufacturer, whichever is more stringent.

B. Maximum fastener spacing for vertical surfaces (walls) is 203 mm (8") o.c., unless limited by wind load restrictions or wood stud racking resistance requirements outlined in **Product Data**.

C. Maximum frame spacing is 610 mm (24") o.c.

D. Sheathing must be thoroughly dry prior to installing adhesively applied and self-adhered ice/water barriers and joint tape. Failure to do so will result in an insufficient bond to the sheathing.

E. Apply side labeled "CGC Securock®" toward exterior. Fit ends and edges closely but not forced together.

F. Fasteners shall be driven flush with the panel surface, without countersinking or deep enough to break the glass mat, and into the framing.

G. Unless otherwise specified or required, CGC Securock® Brand Glass-Mat Sheathing may be applied either perpendicular or parallel to wood or steel framing.

3.2 Soffits—Sheathing Application

The maximum frame spacing for soffits is 406 mm (16") o.c. when installed parallel to the joists and 610 mm (24") o.c. when installed perpendicular to the joists. Maximum fastener spacing for horizontal surface (soffits) is 203 mm (8") o.c.

3.3 Control Joints

Control joints shall be installed at building expansion joints. Location and design of these control joints shall be detailed by the design professional. As a general rule, 9 m (30') maximum spacing between surface control joints is recommended.

3.4 Shear or Fire-Rated Construction

Shear or fire-rated construction may have additional execution requirements as specified in local codes or the ULC/UL Fire Resistance Directory.

3.5 Weather-Resistant Barriers

No weather-resistant barrier is required for exposure warranty but may be required by local codes or cladding system specifications.

3.6 Exterior Cladding Application

Consult exterior cladding manufacturer for installation instructions.

3.7 EIFS

EIFS, like all other cladding systems, is vulnerable to moisture that enters the cavity through wall penetrations, such as windows, doors, deck attachments and utility pipe chases, and at wall/roof intersections. For most residential and some commercial EIFS, manufacturers now specify a weather-resistive barrier for additional protection from moisture that penetrates the wall. In addition, manufacturers of windows, doors, flashing and sealants offer instruction on proper installation and maintenance of their products.

- EIMA (EIFS Industry Members Association), www.eima.com. This website has extensive information about proper installation of EIFS, sealants, flashing, proper attachment of EIFS to substrates, and inspection, maintenance and repair of EIFS claddings.
- ASTM E2112, *Standard Practice for Installation of Exterior Windows, Doors and Skylights*
- ASTM C1481, *Standard Guide for Use of Joint Sealants with EIFS*
- ASTM C1397, *Standard Practice for Application of Class PB EIFS*
- AWCI (Association of Wall and Ceiling Industry) offers EIFS Education and Certification Programs for EIFS applicators and also for building officials, inspectors and design professionals. Contractors whose personnel have successfully completed the AWCI EIFS training can be found on AWCI's EIF*Smart* Construction National Registry. See www.awci.org.

PRODUCT INFORMATION
See cgcinc.com for the most up-to-date product information.

WARNING
Dust can contain silica. Prolonged and repeated breathing of silica dust can cause lung damage and cancer. If cutting with a power tool, use a wet or vacuum saw to reduce the amount of dust generated. Dust can be corrosive to eyes, skin and respiratory tract. Contact can cause severe chemical burns. Wear eye, skin and respiratory protection. If eye contact occurs, flush immediately with water for 30 minutes. If ingested, call a physician.
Product safety information: 800.387.2690 or cgcinc.com.
KEEP OUT OF REACH OF CHILDREN.

TRADEMARKS
The trademarks CGC, FIRECODE, SECUROCK, IT'S YOUR WORLD. BUILD IT., the CGC logo, the design elements and colors, and related marks are trademarks of USG Corporation or its affiliates.

The trademark INTERNATIONAL BUILDING CODE and related marks are trademarks of International Code Council or its affiliates.

NOTE
Products described here may not be available in all geographic markets. Consult your CGC Inc. sales office or representative for information.

NOTICE
We shall not be liable for incidental and consequential damages, directly or indirectly sustained, nor for any loss caused by application of these goods not in accordance with current printed instructions or for other than the intended use. Our liability is expressly limited to replacement of defective goods. Any claim shall be deemed waived unless made in writing to us within thirty (30) days from date it was or reasonably should have been discovered.

SAFETY FIRST!
Follow good safety/industrial hygiene practices during installation. Wear appropriate personal protective equipment. Read MSDS and literature before specification and installation.

800.387.2690
cgcinc.com

Manufactured by:
CGC Inc.
350 Burnhamthorpe Rd. W, 5th Floor
Mississauga, ON L5B 3J1

EWB2452/rev. 8-15
© 2015 CGC Inc.
All rights reserved.
Printed in Canada.

CGC
IT'S YOUR WORLD. BUILD IT.™

STANTEC PROJECT #: 110126045

SUBMITTAL # SU-032 fasteners

This review by Stantec is for general conformance with the design concept of Stantec's design of the:

- [x] Architectural
- [ ] Structural
- [ ] Mechanical
- [ ] Electrical
- [ ] Other

component(s) only and does not mean that Stantec has verified or approves the shop drawing(s). The Contractor remains solely responsible for the shop drawing(s) and this review by Stantec does not relieve the Contractor of the Contractor's responsibility for errors or omissions in the shop drawing(s) or for meeting all requirements of the contract documents. This review does not mean that Stantec approves the detailed design inherent in the shop drawing, responsibility for which shall remain with the Contractor submitting same, nor does this review mean that Stantec accepts any deviation of the shop drawing(s) from the contract documents. The Contractor is responsible for confirming all dimensions and correlating them at the job site, for all construction means, methods and techniques, and for coordination of construction work of all trades, including coordination of all shop drawings.

Stantec

- [x] REVIEWED
- [ ] REVIEWED, AS NOTED
- [ ] REVISE AND RESUBMIT
- [ ] NOT REVIEWED

DATE 2019-05-15

BY TFlender

SCREWS AND PL
SOPREMA

TECHNICAL DATA SHEET **170929SCANE** (supersedes 030610CAN1E)

DESCRIPTION

SCREWS AND PLATES SOPREMA are hardened carbon steel no 14 Phillips head fasteners with anticorrosion coating. They are designed for heavy-duty attachment membranes and composite panels to a minimum 18-22 ga steel, 19 mm (3/4 in) plywood, 38 mm (1 1/2 in) wood and *concrete.

INSTALLATION

*Predrilled with standard 4.8 mm (3/16 in) carbide tip to minimum 13 mm (1/2 in) deeper than the fastener penetration.

FOR COMPLETE INFORMATION ON PRODUCT INSTALLATION, PLEASE CONSULT YOUR SOPREMA REPRESENTATIVE.

CONDITIONNEMENT

SCREWS	
Material	Hardened carbon steel
Thread diameter	6.1 mm (0.238 in)
Shank diameter	4.6 mm (0.180 in)
Head diameter	11.4 mm (0.448 in)
Head style	No 3 deep recess Phillips
Point type	Drill point
WASHERS	
Material	Galvalume
Plate diameter**	50 mm (2 in)
Hole diameter	6.5 mm (0.255 in)
Gauge	20
Qty/skid	36 boxes per skid for all sizes of screws, plates, and pre-assembled components.

**50 mm (2 in) round barbed plates, conform to FM 4470.
(Valeurs nominales)

Specifications	Length	Units per box
SCREWS AND PLATES SOPREMA	5.1 cm (2 in)	500
	7.6 cm (3 in)	500
	10.1 cm (4 in)	250
	12.7 cm (5 in)	250
	15.2 cm (6 in)	250
	17.8 cm (7 in)	250
	17.8 cm (7 in)	500
	20.3 cm (8 in)	250
SCREWS	5.1 cm (2 in)	1000
	7.6 cm (3 in)	1000
	10.1 cm (4 in)	1000
	12.7 cm (5 in)	1000
	15.2 cm (6 in)	1000
	17.8 cm (7 in)	500
	17.8 cm (7 in)	500
	25.4 cm (10 in)	500
	30.5 cm (12 in)	250
PLATES	5.1 cm (2 in)	1000

(All values are nominal)

SYSTEME QUALITE ISO 9001 QUALITY SYSTEM

ISO 14001

SOPREMA

ACCESSORY PRODUCTS

APPLICATIONS

ROOFS

SCREWS AND PLATES
SOPREMA

TECHNICAL DATA SHEET **170929SCANE** (supersedes 030610CAN1E)

PROPERTIES

Properties	Standards	SCREWS AND PLATES SOPREMA
Resistance to corrosion of coating	-	> FM 4470
Pull out load on following types of deck:		
Steel – (gauge 22)	-	245 kg (540 lb)
Wood– 38 mm (1½ in)		274 kg (605 lb)
Concrete – (4000 psi)		386 kg (850 lb)
plywood – 19 mm (¾ in)		268 kg (590 lb)
Minimum penetration on following types of deck:		
Steel – (gauge 18 to 22)	-	19 mm (¾ in)
Wood – 38 mm (1½ in)		25 mm (1 in)
Structural concrete		25 mm (1 in)
Plywood – 19 mm (¾ in)		Minimum through penetration 6.4 mm (¼ in)

Note: Testing preformed under laboratory conditions; field conditions may vary.
(All values are nominal)

STANTEC PROJECT #: 110126045

SUBMITTAL # SU-032 vapor barrier

This review by Stantec is for general conformance with the design concept of Stantec's design of the:

☑ Architectural ☐ Electrical
☐ Structural ☐ Other
☐ Mechanical

component(s) only and does not mean that Stantec has verified or approves the shop drawing(s). The Contractor remains solely responsible for the shop drawing(s) and this review by Stantec does not relieve the Contractor of the Contractor's responsibility for errors or omissions in the shop drawing(s) or for meeting all requirements of the contract documents. This review does not mean that Stantec approves the detailed design inherent in the shop drawing, responsibility for which shall remain with the Contractor submitting same, nor does this review mean that Stantec accepts any deviation of the shop drawing(s) from the contract documents. The Contractor is responsible for confirming all dimensions and correlating them at the job site, for all construction means, methods and techniques, and for coordination of construction work of all trades, including coordination of all shop drawings.

Stantec

☑ REVIEWED
☐ REVIEWED, AS NOTED
☐ REVISE AND RESUBMIT
☐ NOT REVIEWED

DATE 2019-05-15

BY TFlender

SOPRAVAP'R

DESCRIPTION

SOPRAVAP'R is a self-adhesive membrane composed of SBS modified bitumen and a tri-laminated woven polyethylene facer. The underface is covered with a silicone release film.

SOPRAVAP'R is used as a vapour barrier on insulated roof systems.

The width of the membrane has been specifically determined to allow the membrane to fit with most structural steel decks.

RECOMMENDED SUBSTRATES

SOPRAVAP'R can be installed on most substrates, such as steel, concrete, plywood, gypsum or cement boards, and asphaltic panels.

SURFACE PREPARATION

Except for the steel deck, all substrates must be primed with **ELASTOCOL STICK** or **ELASTOCOL STICK ZERO**. The substrate should be clean and sound, free of loose materials or contaminants, such as water and grease which may compromise the performance of the product.

APPLICATION

SELF-ADHESIVE

SOPRAVAP'R is adhered to substrate by peeling off the silicone release film.

Side laps must be a minimum of 75 mm (3 in) and end laps must be a minimum of 150 mm (6 in).

All end laps on steel deck shall be supported by a metal plate 15 cm x 106 cm (6 in x 42 in).

Once installed, pressure must be applied over the whole surface using a roller to ensure a perfect adhesion.

Minimum application temperature: - 10 °C (14 °F)

SURFACE PREPARATION

No product can be installed over **SOPRAVAP'R** membrane with hot bitumen.

FOR COMPLETE INFORMATION ON PRODUCT INSTALLATION, PLEASE CONSULT YOUR SOPREMA REPRESENTATIVE.

PROPERTIES

Properties	SOPRAVAP'R
Thickness	0.8 mm (31 mil)
Dimensions	40.8 x 1.14 m (134 x 3.7 ft)
Gross / Net coverage per roll	46.5 / 43.5 m² (500 / 468 ft²)
Weight	0.77 kg/m² (0.16 lb/ft²)
Selvedge width	75 mm (3 in)
Top face	Tri-laminate woven polyethylene
Underface	Silicone release film
Rolls per skid	25

(All values are nominal)

TDS_SOPRAVAP'R.indd

SYSTÈME QUALITÉ ISO 9001 QUALITY SYSTEM

SYSTÈME ENVIRONNEMENT ISO 14001 ENVIRONMENT SYSTEM

NOTE : All products manufactured by SOPREMA Inc. comply with the description and properties indicated in the technical data sheet that was current at the date of manufacture.

1.877.MAMMOUTH
www.soprema.ca

SOPRAVAP'R

TECHNICAL DATA SHEET
180927SCAN1E
(supersedes 150914SCAN1E)

PRECAUTIONS

If **SOPRAVAP'R** is not immediately covered, particular attention should be paid to implementation of details to ensure a perfect temporary seal. All «T» joints and transitions (90 °) should be covered with **SOPRAMASTIC** sealant. If fishmouths or other openings are created to overlap, they must be sealed with **SOPRAMASTIC** sealant.

PROPERTIES

SOPRAVAP'R membrane is evaluated in accordance with the requirements contained in CAN/ULC-S126, *Standard Method of Test for Fire Spread Under Roof Deck Assemblies.*

Properties	Standards	SOPRAVAP'R
Tensile strength, MD/XD	ASTM D5147	9.5 / 13 kN/m (54 / 74 lbf/in)
Ultimate elongation, MD/XD	ASTM D5147	33 / 25 %
Cold bending	ASTM D5147	- 50 °C (- 58 °F)
Static puncture	ASTM D5602	400 N (90 lbf)
Tear resistance, MD/XD	ASTM D1970	423 / 458 N (95 / 103 lbf)
Lap adhesion	ASTM D1876	1000 N/m (68 lbf/ft)
Water absorption	ASTM D5147	0.1 % max.
Peel resistance on steel	ASTM D903	950 N/m (5.4 lbf/in)
Water vapour permeance	ASTM E96 (Procedure B)	1.7 ng/Pa.s.m² (0.03 perm)
Air permeability	ASTM E2178	< 0.001 L/s•m²

(All values are nominal)

STORAGE & HANDLING

Rolls must be stored upright. If the product is stored outdoors, cover them with an opaque protective cover after removal of the delivery packaging.

TDS_SOPRAVAP'R.indd

SYSTÈME QUALITÉ ISO 9001 QUALITY SYSTEM

ISO 14001 ENVIRONMENT SYSTEM

NOTE : All products manufactured by SOPREMA inc. comply with the description and properties indicated in the technical data sheet that was current at the date of manufacture.

ELASTOCOL 500

STANTEC PROJECT #: 110126045

SUBMITTAL # SU-032 primer for vapor barrier

This review by Stantec is for general conformance with the design concept of Stantec's design of the:

☑ Architectural ☐ Electrical
☐ Structural ☐ Other
☐ Mechanical

component(s) only and does not mean that Stantec has verified or approves the shop drawing(s). The Contractor remains solely responsible for the shop drawing(s) and this review by Stantec does not relieve the Contractor of the Contractor's responsibility for errors or omissions in the shop drawing(s) or for meeting all requirements of the contract documents. This review does not mean that Stantec approves the detailed design inherent in the shop drawing, responsibility for which shall remain with the Contractor submitting same, nor does this review mean that Stantec accepts any deviation of the shop drawing(s) from the contract documents. The Contractor is responsible for confirming all dimensions and correlating them at the job site, for all construction means, methods and techniques, and for coordination of construction work of all trades, including coordination of all shop drawings.

Stantec

☑ REVIEWED
☐ REVIEWED, AS NOTED
☐ REVISE AND RESUBMIT
☐ NOT REVIEWED

DATE 2019-05-15

BY TFlender

ELASTOCOL 500

DESCRIPTION

ELASTOCOL 500 is a primer made from bitumen, fast-evaporating solvents and adhesive enhancing additives. It is required to prime most surfaces such as concrete and metal substrates in order to improve the adhesion of torch-applied waterproofing membranes.

APPLICATION

ELASTOCOL 500 can be applied with a brush, roller or sprayer. It must be thoroughly dry before applying the waterproofing membrane.

WARNING: DO NOT ACCELERATE DRYING OF ELASTOCOL 500 BY HEATING IT WITH A TORCH.

Amount used could increase depending on porosity of the surface.

FOR COMPLETE INFORMATION ON PRODUCT INSTALLATION, PLEASE CONSULT YOUR SOPREMA REPRESENTATIVE.

PROPERTIES

ELASTOCOL 500 meets the requirements of the ASTM D41 standard.

Properties	Standards	ELASTOCOL 500
Specific Gravity at 20 °C	-	1.00 kg/L
Colour	-	Black
Solids by Weight	-	35 %
Viscosity, Btookfield at 25 °C	-	50 cP
Drying time	-	1 to 12 hours

(All values are nominal)

PACKAGING

19 L pails, 200 L drums and 350g spray cans.

Average coverage: 0.15 to 0.25 L/m².

Shelf life: Up to 5 years in original sealed containers, in cool and ventilated area.

CLEANING

Tools can be cleaned with petroleum solvents such as mineral spirits, varsol, xylene, etc.

PARTICULAR INDICATIONS

ELASTOCOL 500 is a flammable product.

Store away from direct sunlight and open flame. Keep ignition sources away during application and until solvent has evaporated. Harmful if inhaled, swallowed or when in contact with the skin. In closed area, ventilate carefully using mechanical means if necessary. Do not pour residues in drains.

CONSULT THE MATERIAL SAFETY DATA SHEET PRIOR TO USE.

SYSTÈME QUALITÉ ISO 9001 QUALITY SYSTEM

SYSTÈME ENVIRONNEMENT ISO 14001 ENVIRONMENT SYSTEM

TDS_ELASTOCOL_500.indd

NOTE : SOPREMA INC. may modify the composition and/or utilization of its products without prior notice.

STANTEC PROJECT #: 110126045

SUBMITTAL # SU-032 roof insulation

This review by Stantec is for general conformance with the design concept of Stantec's design of the:

☑ Architectural ☐ Electrical
☐ Structural ☐ Other
☐ Mechanical

component(s) only and does not mean that Stantec has verified or approves the shop drawing(s). The Contractor remains solely responsible for the shop drawing(s) and this review by Stantec does not relieve the Contractor of the Contractor's responsibility for errors or omissions in the shop drawing(s) or for meeting all requirements of the contract documents. This review does not mean that Stantec approves the detailed design inherent in the shop drawing, responsibility for which shall remain with the Contractor submitting same, nor does this review mean that Stantec accepts any deviation of the shop drawing(s) from the contract documents. The Contractor is responsible for confirming all dimensions and correlating them at the job site, for all construction means, methods and techniques, and for coordination of construction work of all trades, including coordination of all shop drawings.

Stantec

☐ REVIEWED
☑ REVIEWED, AS NOTED
☐ REVISE AND RESUBMIT
☐ NOT REVIEWED

DATE 2019-05-15

BY TFlender

SOPRAROCK DD PLUS

DESCRIPTION

SOPRAROCK DD PLUS is a mineral wool board insulation with a rigid u
SOPRAROCK DD PLUS is impregnated with a bitumen layer which is c
adhered with ***COLPLY ADHESIVE (BRUSH GRADE)***. ***SOPRAROCK DD PL***
adhered with ***DUOTACK*** adhesive only.

Note:
DD plus with a bitumen layer is not required since a torch-on membrane will not be installed.
Thickness: 200mm + 150mm

ADVANTAGES

SOPRAROCK are mineral wool fiber insulations made from balsat rock and slag. This combination results in a non-combustible product with a melting point of approximately 1177 °C (2150 °F), which gives it excellent fire resistance properties. ***SOPRAROCK*** mineral wool is a water repellent yet vapor permeable material. ***SOPRAROCK DD PLUS*** offers excellent dimensional stability and excellent acoustic properties. Moreover, the R-Value of ***SOPRAROCK DD PLUS*** is stable. ***SOPRAROCK DD PLUS*** is fire resistant and made from natural and recycled products.

PROPERTIES

Properties	Standards	SOPRAROCK DD PLUS
Thickness	-	2-6 in (by increment of ½ in)
Dimensions	-	4 ft x 4 ft (1.2 x 1.2 m)
Thermal Resistance (RSI Value - m^2K/W for 25.4 mm at 75 °F)	ASTM C 518 (C 177)	0.68 m^2K/W (R – 3.8 hr • ft^2 •°F / BTU for 1in at 75 °F)
Compressive Strength - Top Layer at 10% - Top Layer at 25% - Entire Board (3 in Thickness) at 10% - Entire Board (3 in Thickness) at 25% - Point load at 5mm compression	ASTM C 165 EN 12430	 139 kPa (20.2 psi) 252 kPa (37.0 psi) 71 kPa (10.3 psi) 103.5 kPa (15.0 psi) 205 kPa (30.0 psi)
Density - Top Layer - Bottom layer * Formed as a monolithic structure	ASTM C 612-09	 13.75 lb/ft^3 (220 kg/m^3) 10.0 lb/ft^3 (160 kg/m^3)
Dimensional Stability, Linear Shrinkage 24 hours at 1200 °F (650 °C)	ASTM C 356	0.71 %
Water Absorption	ASTM C 209	< 1.0 %
Water Vapor Sorption	ASTM C 1104	0.15 %

CAN/ULC-S107-03 **Fire test of roof covering, classified according to the type of membrane used.**

CAN/ULC-S126-06 **Fire spread under roof deck assemblies, classified according to the type of membrane used.**

(All values are nominal)

PACKAGING

The factory packaging is intended for the protection of the insulation boards during transit and is not intended for job site protection against the elements. When product is stored outdoors, the plastics shroud must be slit and the insulation protected by a waterproof, breathable covering such as a tarpaulin. Insulation must be stored minimum 102 mm (4 in) above ground and kept on a solid flat surface.

PRECAUTIONS

SOPRAROCK DD PLUS should not be exposed to inclement weather during shipment, storage or installation. At the completion of a day's work, all exposed edges should be sealed by lapping roof membrane over them.

SYSTÈME QUALITÉ ISO 9001 QUALITY SYSTEM

SYSTÈME ENVIRONNEMENT ISO 14001 ENVIRONMENT SYSTEM

TDS_SOPRAROCK_DD_PLUS.indd

NOTE : SOPREMA INC. may modify the composition and/or utilisation of its products without prior notice. Consequently, orders will be filled according to the latest specification.

2 x 4" + 1 x 6"

MANUFACTURIER DE PROFILES D'ACIER

BARRE EN "Z"

Tél. : (418) 871-8088
Fax : (418) 871-3140

STANTEC PROJECT #: 110126045

SUBMITTAL # SU-032

This review by Stantec is for general conformance with the design concept of Stantec's design of the:

☑ Architectural ☐ Structural ☐ Mechanical ☐ Electrical ☐ Other

component(s) only and does not mean that Stantec has verified or approves the shop drawing(s). The Contractor remains solely responsible for the shop drawing(s) and this review by Stantec does not relieve the Contractor of the Contractor's responsibility for errors or omissions in the shop drawing(s) or for meeting all requirements of the contract documents. This review does not mean that Stantec approves the detailed design inherent in the shop drawing, responsibility for which shall remain with the Contractor submitting same, nor does this review mean that Stantec accepts any deviation of the shop drawing(s) from the contract documents. The Contractor is responsible for confirming all dimensions and correlating them at the job site, for all construction means, methods and techniques, and for coordination of construction work of all trades, including coordination of all shop drawings.

Stantec

☑ REVIEWED
☐ REVIEWED, AS NOTED
☐ REVISE AND RESUBMIT
☐ NOT REVIEWED

DATE 2019-05-15

BY TFlender

ta sheet

CHE TECHNIQUE

Z-BAR

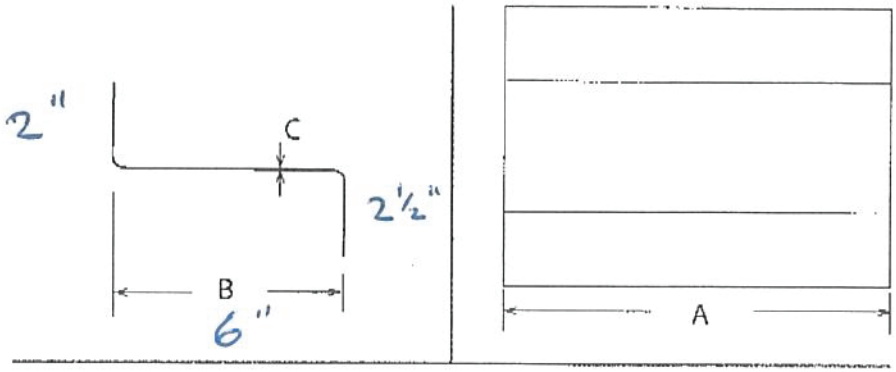

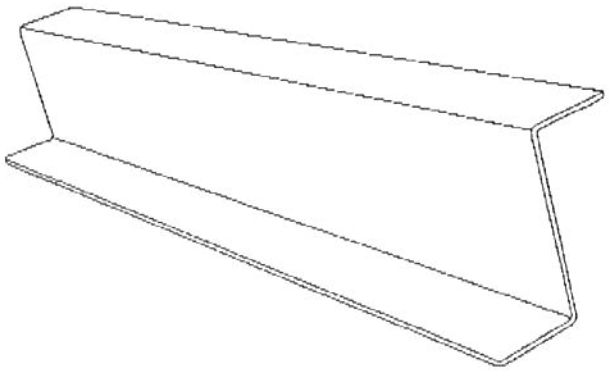

LÉGENDE

A = 10 pieds (Autres longueurs disponibles sur demande)
B = 1/2 pouces minimum
C = .018", .034", .043", .054", .068" → Thickness

A = 10 Feet (Other lengths also available on request)
B = ½ inch minimum



Data Sheet
FICHE TECHNIQUE

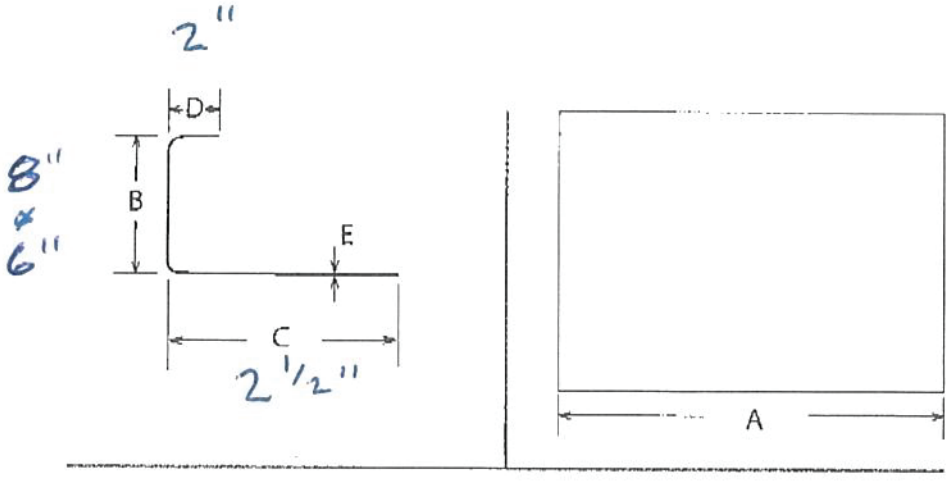

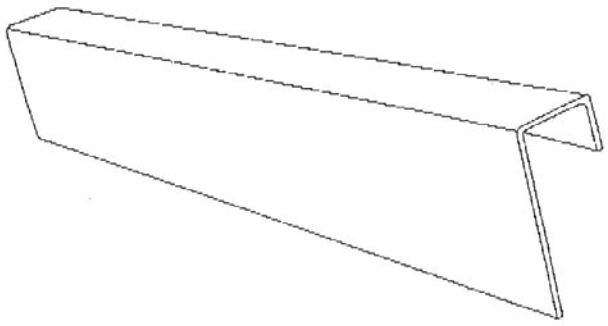

LÉGENDE:

A = 10 PIEDS (AUTRES LONGUEURS DISPONIBLES SUR DEMANDE)
B = 1/2" MINIMUM
C = 1/2" MINIMUM
D = 1/2" MINIMUM
E = 18, 34, 43, 54, 68 MILS. → Thickness

A = 10 Feet (other lengths also available on request)
B, C, D = 1/2 inch minimum

mammouth

STANTEC PROJECT #: 110126045

SUBMITTAL # SU-032 primer for roof underlayment

This review by Stantec is for general conformance with the design concept of Stantec's design of the:

☑ Architectural ☐ Structural ☐ Mechanical ☐ Electrical ☐ Other

component(s) only and does not mean that Stantec has verified or approves the shop drawing(s). The Contractor remains solely responsible for the shop drawing(s) and this review by Stantec does not relieve the Contractor of the Contractor's responsibility for errors or omissions in the shop drawing(s) or for meeting all requirements of the contract documents. This review does not mean that Stantec approves the detailed design inherent in the shop drawing, responsibility for which shall remain with the Contractor submitting same, nor does this review mean that Stantec accepts any deviation of the shop drawing(s) from the contract documents. The Contractor is responsible for confirming all dimensions and correlating them at the job site, for all construction means, methods and techniques, and for coordination of construction work of all trades, including coordination of all shop drawings.

Stantec

☑ REVIEWED

☐ REVIEWED, AS NOTED

☐ REVISE AND RESUBMIT

☐ NOT REVIEWED

DATE 2019-05-15

BY TFlender

REMA

MOUTH

ema.ca

DATA SHEET

CAN9E

0318SCAN1E)

ELASTOCOL STICK

DESCRIPTION

ELASTOCOL STICK is a primer designed to enhance the adhesion of self-adhesive membranes on porous surfaces such as "**DENS GLASS GOLD**" and "**DENS DECK**" at temperatures above –10 °C (14 °F). It is composed of SBS synthetic rubbers, adhesive enhancing resins and volatile solvents. It is also suitable to prime non-porous surfaces such as concrete, fibre cement, metal, and wood.

APPLICATION

ELASTOCOL STICK can be applied with a brush, a roll or a spray can. It must be thoroughly dry before applying the waterproofing membrane. **ELASTOCOL STICK** must be shaken well before use.

WARNING: DO NOT ACCELERATE DRYING OF ELASTOCOL STICK BY HEATING IT WITH A TORCH.
FOR COMPLETE INFORMATION ON PRODUCT INSTALLATION, PLEASE CONSULT YOUR SOPREMA REPRESENTATIVE.

COVERAGE

Average coverage: porous surfaces: 0.3 to 0.5 L/m^2,

non-porous surfaces: 0.1 to 0.25 L/m^2.

PROPERTIES

Properties	ELASTOCOL STICK
Specific Gravity at 20 °C (68 °F)	0.79 kg/L
Colour	Red
Solids by Weight	24 %
Viscosity, Brookfield at 25 °C (77 °F)	200 cP
Drying time	15 to 60 minutes, depending on temperature and quantity applied.

(All values are nominal)

PACKAGING

3.78 L, 19 L pails and 350 g spray cans.

STORAGE & HANDLING

Shelf life: Up to 60 months in original sealed containers, in cool and ventilated area.

Tools can be cleaned with petroleum solvents such as mineral spirits, varsol, xylene, etc.

Store in a well ventilated area. Keep away from any source of heat, dampness, humidity, oxidizing agents or direct sunlight. Flammable before curing. Keep away from sources of ignition.

For more information, refer to instruction on the label of the can and to relevant Material Safety Data Sheet (MSDS).

SYSTÈME QUALITÉ ISO 9001 QUALITY SYSTEM

SYSTÈME ENVIRONNEMENT ISO 14001 ENVIRONMENT SYSTEM

TDS_ELASTOCOL_STICK.indd

NOTE : SOPREMA INC. may modify the composition and/or utilisation of its products without prior notice.

STANTEC PROJECT #: 110126045

SUBMITTAL # SU-032 HT roof underlayment

This review by Stantec is for general conformance with the design concept of Stantec's design of the:

- [x] Architectural
- [ ] Structural
- [ ] Mechanical
- [ ] Electrical
- [ ] Other

component(s) only and does not mean that Stantec has verified or approves the shop drawing(s). The Contractor remains solely responsible for the shop drawing(s) and this review by Stantec does not relieve the Contractor of the Contractor's responsibility for errors or omissions in the shop drawing(s) or for meeting all requirements of the contract documents. This review does not mean that Stantec approves the detailed design inherent in the shop drawing, responsibility for which shall remain with the Contractor submitting same, nor does this review mean that Stantec accepts any deviation of the shop drawing(s) from the contract documents. The Contractor is responsible for confirming all dimensions and correlating them at the job site, for all construction means, methods and techniques, and for coordination of construction work of all trades, including coordination of all shop drawings.

Stantec

- [x] REVIEWED
- [ ] REVIEWED, AS NOTED
- [ ] REVISE AND RESUBMIT
- [ ] NOT REVIEWED

DATE 2019-05-15

BY TFlender

LASTOBOND SHIELD HT

TECHNICAL DATA SHEET **170510SCANE** (supersedes 140627SCANE)

DESCRIPTION

LASTOBOND SHIELD HT is a self-adhesive roof underlayment and eave protection membrane composed of SBS modified bitumen with a glass mat reinforcement. The surface is slip resistant tri-laminate woven polyethylene, while the underface is covered with a "split-back" silicone release film.

This surface allows the use of **LASTOBOND SHIELD HT** membrane on various slopes.

RECOMMENDED SUBSTRATES

This product can be used on plywood, OSB or asphaltic boards such as **SOPRABOARD**.

SURFACE PREPARATION

Surfaces must be clean, dry and free of loose particles. In a case where a special job site condition requires superior adhesion, it is recommended that the substrate be primed with one of the **ELASTOCOL STICK** primers.

INSTALLATION

LASTOBOND SHIELD HT is used under roofing shingles. The thermal resistance of **LASTOBOND SHIELD HT** allows the use of the membrane under roof covering materials (metal claddings, tiles, etc.) which can reach high temperatures. It is advisable to install the roof covering materials within 24 hours after the installation of those membranes.

SELF-ADHESIVE

LASTOBOND SHIELD HT must be adhered to support by peelling off the siliconed release film. Once installed, a pressure must be applied over the whole surface using a membrane roller to ensure good contact.

Application temperatures: >10 °C (50 °F)

Service temperatures: -45 to 115 °C (-49 to 239 °F)

FOR COMPLETE INFORMATION ON PRODUCT INSTALLATION, PLEASE CONSULT YOUR SOPREMA REPRESENTATIVE.

PACKAGING

Specifications	LASTOBOND SHIELD HT
Thickness	1.0 mm (40 mil)
Dimensions	22.9 x 0.91 m (75 x 3 ft)
Weight	0.97 kg/m² (23.0 lb/ft²)
Selvedge width	75 mm (3 in)
Surface	Tri-laminate woven polyethylene
Underface	Self-adhesive, covered with a "Split-back" silicone release film

(All values are nominal)

SYSTÈME QUALITÉ ISO 9001 QUALITY SYSTEM

ISO 14001

SOPREMA®

WATERPROOFING

APPLICATIONS

ROOFS

LASTOBOND
SHIELD HT

TECHNICAL DATA SHEET **170510SCANE** (supersedes 140627SCANE)

PROPERTIES

Properties	Standards	LASTOBOND SHIELD HT
Breaking Strength, MD/XD	ASTM D1970	11/12 kN/m (63/68 lbf/in)
Elongation at Break, MD/XD	ASTM D1970	30/20 %
Tear resistance, MD/XD	ASTM D1970	375/400 N (84/90 lbf)
Static puncture resistance	ASTM D5602	400 N (90 lb)
Adhesion to plywood, 4.5 °C (40 °F)	ASTM D1970	1.6 kgf/30.5 cm (3.5 lbf/ft)
Adhesion to plywood, 24 °C (75 °F)	ASTM D1970	25 kgf/30.5 cm (55 lbf/ft)
Low temperature flexibility	ASTM D1970	Pass at -30 °C (-22 °F)
Water vapour permeance	ASTM E96	< 2.1 ng/Pa•s•m² (< 0.037 perm)
Nail Sealability	ASTM D1970	Pass

For CCMC product evaluation in compliance with CSA A123.22-08, see CCMC Evaluation Listing # 13570-L.
(All values are nominal)

ENTREPOSAGE

Rolls must be stored upright, with the selvedge side on top. If the products are stored outdoors, cover them with an opaque protection cover after removal of the delivery packaging.

SOPREMA®

SYSTEME QUALITÉ ISO 9001 QUALITY SYSTEM

ISO 14001

mammouth

STANTEC PROJECT #: 110126045

SUBMITTAL # SU-032 roofing mastic

This review by Stantec is for general conformance with the design concept of Stantec's design of the:

☑ Architectural ☐ Structural ☐ Mechanical ☐ Electrical ☐ Other

component(s) only and does not mean that Stantec has verified or approves the shop drawing(s). The Contractor remains solely responsible for the shop drawing(s) and this review by Stantec does not relieve the Contractor of the Contractor's responsibility for errors or omissions in the shop drawing(s) or for meeting all requirements of the contract documents. This review does not mean that Stantec approves the detailed design inherent in the shop drawing, responsibility for which shall remain with the Contractor submitting same, nor does this review mean that Stantec accepts any deviation of the shop drawing(s) from the contract documents. The Contractor is responsible for confirming all dimensions and correlating them at the job site, for all construction means, methods and techniques, and for coordination of construction work of all trades, including coordination of all shop drawings.

Stantec

☑ REVIEWED

☐ REVIEWED, AS NOTED

☐ REVISE AND RESUBMIT

☐ NOT REVIEWED

DATE 2019-05-15

BY TFlender

SOPRAMASTIC

DESCRIPTION

SOPRAMASTIC is a black, solvent-based mastic containing SBS modified bitumen, fibres and mineral fillers. It is an ideal complement for bituminous waterproofing membranes and is used as jointing mastic, caulking material and joint filler. It is compatible with bituminous materials and ensures good waterproofing.

SOPRAMASTIC is a multi-purpose mastic that has been formulated with a high level of polymer in order to resist flow at high temperatures. Furthermore, it is easy to manipulate at temperatures down to -10 °C (14 °F).

APPLICATION

SOPRAMASTIC must be applied to clean, sound substrates.

SOPRAMASTIC tubes can be used with a standard cartridge extruder.

Excellent adherence on most materials without primer. It can be applied to damp surfaces.

SHOULD NOT BE USED AS A PITCH POCKET FILLER.

FOR COMPLETE INFORMATION ON PRODUCT INSTALLATION, PLEASE CONSULT YOUR SOPREMA REPRESENTATIVE.

PROPERTIES

SOPRAMASTIC meets the requirements of CAN/CGSB-37.5-M89 and ASTM D4586 standards.

Properties	Standards	SOPRAMASTIC
Specific Gravity at 20 °C (68 °)	-	1.12 kg/L
Colour	-	Black
Application temperatures Range	-	-10 to 35 (14 to 95 °F)
Service temperatures Range	-	-40 to 80 (-40 to 175 °F)
Solids by Weight	-	83 %
Setting time	-	Between 4 and 24 hours, depending on temperature and quantity applied.

(All values are nominal)

PACKAGING

310 ml (20 per boxes) & 800 ml cartridges, and 10 L pails.

STORAGE & HANDLING

Shelf life: Up to 36 months in original sealed containers.

Tools can be cleaned with petroleum solvents such as mineral spirits, varsol, xylene, etc.

SOPRAMASTIC is a **flammable** product. Store in a cool, dry area.

CONSULT THE MATERIAL SAFETY DATA SHEET PRIOR TO USE.

VARIOUS SEALER

SYSTÈME QUALITÉ ISO 9001 QUALITY SYSTEM

SYSTÈME ENVIRONNEMENT ISO 14001 ENVIRONMENT SYSTEM

TDS_SOPRAMASTIC.indd

NOTE : SOPREMA INC. may modify the composition and/or utilisation of its products without prior notice.

mammouth

SOPREMA

1.877.MAMMOUTH
www.soprema.ca

SOPRAMASTIC ALU

TECHNICAL DATA SHEET
131007SCAN8E
(supersedes 130107SCAN2E)

DESCRIPTION

SOPRAMASTIC ALU is a solvent-based mastic containing SBS synthetic rubber and bitumen. It complements bituminous waterproofing membranes and is used as jointing mastic, caulking material and joint filler. It is compatible with bituminous materials and ensures good waterproofing. It contains leafing aluminium pigmentation providing superior protection against ultraviolet light and its high level of polymer ensures long-term flexibility and elasticity.

APPLICATION

SOPRAMASTIC ALU must be applied to clean, sound substrates.

The 310 ml cartridges can be used with a standard cartridge extruder.

Excellent adherence on most materials without primer. It can be applied to damp surfaces. To optimise its reflective properties, avoid contact of water until **SOPRAMASTIC ALU** is dry.

SHOULD NOT BE USED AS A PITCH POCKET FILLER.

FOR COMPLETE INFORMATION ON PRODUCT INSTALLATION, PLEASE CONSULT YOUR SOPREMA REPRESENTATIVE.

PROPERTIES

SOPRAMASTIC ALU meets the requirements of CAN/CGSB-37.5-M89 and ASTM D4586 standards.

Properties	Standards	SOPRAMASTIC ALU
Specific Gravity at 20 °C (68 °F)	-	1.22 kg/L
Colour	-	Aluminium
Application temperatures Range	-	-10 to 35 (14 to 95 °F)
Service temperatures Range	-	-40 to 80 (-40 to 175 °F)
Solids by Weight	-	85 %
Setting time	-	Between 4 and 24 hours, depending on temperature and quantity applied.

(All values are nominal)

PACKAGING

310 ml (20 per boxes).

STORAGE & HANDLING

Shelf life: Up to 36 months in original sealed containers, in cool and ventilated area.

Tools can be cleaned with petroleum solvents such as mineral spirits, varsol, xylene, etc.

SOPRAMASTIC ALU is a **flammable** product. Store in a cool, dry area.

CONSULT THE MATERIAL SAFETY DATA SHEET PRIOR TO USE.

VARIOUS SEALER

SYSTÈME QUALITÉ ISO 9001 QUALITY SYSTEM

SYSTÈME ENVIRONNEMENT ISO 14001 ENVIRONMENT SYSTEM

TDS_SOPRAMASTIC_ALU.indd

NOTE: SOPREMA INC. may modify the composition and/or utilisation of its products without prior notice.

STANTEC PROJECT #: 110126045

SUBMITTAL # SU-032 PU- flashing

This review by Stantec is for general conformance with the design concept of Stantec's design of the:

☑ Architectural ☐ Electrical
☐ Structural ☐ Other
☐ Mechanical

component(s) only and does not mean that Stantec has verified or approves the shop drawing(s). The Contractor remains solely responsible for the shop drawing(s) and this review by Stantec does not relieve the Contractor of the Contractor's responsibility for errors or omissions in the shop drawing(s) or for meeting all requirements of the contract documents. This review does not mean that Stantec approves the detailed design inherent in the shop drawing, responsibility for which shall remain with the Contractor submitting same, nor does this review mean that Stantec accepts any deviation of the shop drawing(s) from the contract documents. The Contractor is responsible for confirming all dimensions and correlating them at the job site, for all construction means, methods and techniques, and for coordination of construction work of all trades, including coordination of all shop drawings.

Stantec

☑ REVIEWED
☐ REVIEWED, AS NOTED
☐ REVISE AND RESUBMIT
☐ NOT REVIEWED

DATE 2019-05-15

BY TFlender

mammouth

ALSAN FLASHING

DESCRIPTION

ALSAN FLASHING is a waterproofing one-component polyurethane / bitumen resin. It is dedicated to roof flashings and details where it is difficult to apply waterproofing membranes. **ALSAN FLASHING** is ready to use.

RECOMMENDED SUBSTRATES

Without primer: traditionnal bituminous waterproofing membranes, wood, metal, prepaint metal, concrete, polyurethane membrane (**TRAFIK HP**) and PVC pipe (vertical partition wall only);

With primer (**ELASTOCOL 500**): BUR bituminous waterproofing;

With primer (**ELASTOCOL STICK, ELASTOCOL STICK ZERO**): membranes with HDPE surface.

SURFACE PREPARATION

Surfaces must be clean, dry and free of loose particles, formwork, curing products, irregularities, slurry, etc.

PVC pipe must be sanded with sandpaper.

All metal surfaces must be cleaned with non-greasy solvent such as acetone or Methyl Ethyl Ketone (MEK). Metals surfaces must be smooth, clean and uncontaminated (free of oxydized bitumen).

INSTALLATION

ALSAN FLASHING is applied with a with a trowel, a brush or a roller in two (2) layers (minimum) or in three (3) layers when **FLASHING REINFORCEMENT** is required. Mix well the product before usage.

Transitions, changes in plan and junctions between two supports, must be reinforced with **FLASHING REINFORCEMENT**. **ARMATURE FLASHING** is installed in a first layer of **ALSAN FLASHING**. This layer must be thick enough to completely immerse the reinforcement. **FLASHING REINFORCEMENT** will be immediately covered with a second layer of **ALSAN FLASHING** until saturation. The third layer of **ALSAN FLASHING** is applied when the second layer is dry and tack free.

ALSAN FLASHING is UV resistant. It can be left exposed without protection. For aesthetic purposes, the top coat can also be covered with roofing granules or for aluminium colour with **SOPRALASTIC 124 ALU** waterproofing coating . The third coat of **ALSAN FLASHING** can be substitute by white aliphatic two-components **ALSAN FINISH** polyurethane coating.

Minimum application temperature: 5 °C (41 °F)

Service temperature: -30 to 150 °C (-22 to 302 °F)

Do not use if rain or snow is predicted within 12 hours after the installation.

COVERAGE

Coverage by layer			
	Coverage*	Thicknesses	
		wet mm	wet mils
Average consumption	3.78 L (1 US Gallon) covers approximately 4.6 m² (50 ft²) 18.9 L (5 US Gallons) covers approximately 23 m² (250 ft²)	0.8	30

* Coverage rates may vary depending on substrate conditions.

E MAM17A.indd

VARIOUS SEALER

SYSTÈME QUALITÉ ISO 9001 QUALITY SYSTEM

ISO 14001 ENVIRONMENT SYSTEM

NOTE : SOPREMA INC. may modify the composition and/or utilisation of its products without prior notice.

mammouth

SOPREMA

1.877.MAMMOUTH
www.soprema.ca

ALSAN FLASHING

TECHNICAL DATA SHEET
130626SCAN1E
(supersedes 110712SCAN2E)

PROPERTIES

Properties	Standards	ALSAN FLASHING
Physical state	-	Brown viscous liquid
Density at 25 °C (77 °F)	-	1.07 kg/L
Solids content	-	80 %
Softening point	-	150 °C (302 °F)
Ultimate elongation	ASTM D412	500 %
Breaking strength	ASTM D412	1.35 MPa
Tear resistance	ASTM D903	102.3 N (23 lbf)
Tear resistance	ASTM D 5147, sec.7	253.5 N (57 lbf)
Water vapour permeance	ASTM E96 (Procedure B)	< 30 ng/Pa•s•m² (< 0.47 perm)
Peel adhesion after water immersion	ASTM C836	792 N/m
Drying time	-	Ready to recoat after 2 hours Dry: 12 hours (remains tacky to touch)
Fully cured	-	3 days

(All values are nominal)

PACKAGING

3.78 L and 19 L pails.

STORAGE & HANDLING

Shelf life: 12 months, properly stored in original unopened containers. For more information, refer to instruction on the label of the can and to revelant Material Safety Data Sheets (MSDS).

E-MAM17A.indd

SYSTÈME QUALITÉ ISO 9001 QUALITY SYSTEM

SYSTÈME ENVIRONNEMENT ISO 14001 ENVIRONMENT SYSTEM

NOTE: SOPREMA INC. may modify the composition and/or utilization of its products without prior notice.

STANTEC PROJECT #: 110126045

SUBMITTAL # SU-032 plywood

This review by Stantec is for general conformance with the design concept of Stantec's design of the:

- [x] Architectural
- [ ] Structural
- [ ] Mechanical
- [ ] Electrical
- [ ] Other

Stantec

- [x] REVIEWED
- [ ] REVIEWED, AS NOTED
- [ ] REVISE AND RESUBMIT
- [ ] NOT REVIEWED

DATE 2019-05-15

BY TFlender

component(s) only and does not mean that Stantec has verified or approves the shop drawing(s). The Contractor remains solely responsible for the shop drawing(s) and this review by Stantec does not relieve the Contractor of the Contractor's responsibility for errors or omissions in the shop drawing(s) or for meeting all requirements of the contract documents. This review does not mean that Stantec approves the detailed design inherent in the shop drawing, responsibility for which shall remain with the Contractor submitting same, nor does this review mean that Stantec accepts any deviation of the shop drawing(s) from the contract documents. The Contractor is responsible for confirming all dimensions and correlating them at the job site, for all construction means, methods and techniques, and for coordination of construction work of all trades, including coordination of all shop drawings.

ywood Handbook

CERTIFIED QUALITY QUALITÉ CERTIFIÉE
CAN PLY
EXTERIOR









CertiWood™

1 DE 6

Over Five Decades of Service to the Plywood Industry

The CertiWood™ Technical Centre (formerly named the Canadian Plywood Association or CANPLY) is a non-profit, industry-funded association representing manufacturers of engineered wood products in Canada. Since the association's name change in 2005 from CANPLY to CertiWood™, plywood producing companies have retained the CANPLY trademark and continue to stamp their production with the well-known mark. The CANPLY stamp continues to serve as an assurance to buyers that the plywood is produced under CertiWood's exacting 3rd party quality auditing process and that it will perform in a satisfactory and predictable manner.

CANPLY plywood is manufactured by 6 companies belonging to CertiWood™ (member companies) operating in British Columbia and Alberta. Together, these companies operate 9 mills and produce over 90% of all structural, construction and industrial plywood manufactured in Canada. Member company plywood production is about 1.7 billion square feet (3/8" basis) annually. Approximately 90% is shipped to markets across Canada. The balance is exported to some 28 countries, among these: the United States, Japan, the United Kingdom and Germany.

Originally founded in 1950, CertiWood™ has a long history of service to its member companies and their customers. Today, CertiWood's purpose is, "To provide cost-effective certification, quality auditing and testing services to Canadian engineered wood products manufacturers".

CERTIFICATION MARKS

The registered certification marks shown below appear on CANPLY EXTERIOR Douglas Fir plywood (DFP), CANPLY EXTERIOR Canadian Softwood plywood (CSP) and CANPLY EXTERIOR Poplar Plywood manufactured by our members to meet the requirements of CSA O121, CSA O151 or CSA O153. CertiWood™ also certifies its Members' products to meet US and other international standards (see below).

Face Stamp on CANPLY EXTERIOR Plywood (Unsanded grades)



Licensed mill number of the CertiWood™ member

Indicates that this product is manufactured under CertiWood's Quality Certification Program.

Indicates that the plywood has been manufactured by a member of CertiWood™

Indicates a completely waterproof glue bond

Indicates species designation: DFP (Douglas Fir plywood), CSP (Canadian Softwood plywood), Aspen or Poplar plywood

Indicates the CSA standard governing manufacture

* DFP, CSP, ASPEN or POPLAR
**CSA O151, CSA O121 or CSA O153

Edge Stamp on CANPLY EXTERIOR Plywood (Sanded and Unsanded grades)

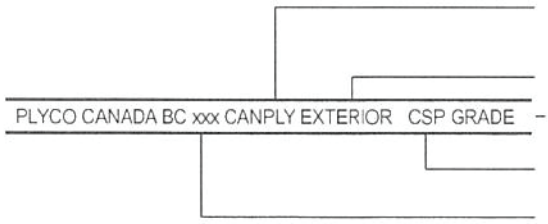

Indicates that the plywood has been manufactured by a CertiWood™ member and is quality certified

Indicates a completely waterproof glue bond

Panel grade

Indicates species designation: DFP (Douglas Fir plywood), CSP (Canadian Softwood plywood), Aspen or Poplar plywood

Licensed mill number of CertiWood™ member (BC xxx, AB xxx).



This symbol identifies the patented tongue and groove profiles of CANPLY T&G products formerly known as COFI FLOOR & COFI ROOF.



Face stamp on COFI FORM Douglas Fir plywood for concrete formwork.

INTERNATIONAL CERTIFICATION MARKS:



USA



JAPAN



EUROPEAN UNION

Plywood Handbook



CANPLY EXTERIOR PLYWOOD

Information in this brochure pertains to CANPLY EXTERIOR Douglas Fir plywood, CANPLY EXTERIOR Canadian Softwood plywood and CANPLY EXTERIOR Poplar plywood. These products are manufactured in accordance with Canadian Standards Association Specifications CSA O121 Douglas Fir Plywood, CSA O151 Canadian Softwood Plywood or CSA O153 Poplar Plywood by companies who are members of CertiWood™. CANPLY certification stamps, shown opposite, are on all Canadian Plywood products meeting CertiWood™'s Quality Certification Program.

Contents page

CANPLY EXTERIOR Plywood 3
Plywood Grades and Products 6
Sizes and Thicknesses 6
Working with Plywood 8
Fasteners 8
Glues and Gluing 10
Floor Sheathing 11
Wall Sheathing 14
Roof Sheathing 18
Permanent Wood Foundations 19
Concrete Forms 19
Plywood in Farm Structures 23
Plywood Structural Assemblies 23
Finishing 23
Preservative Treatments 26
Fire Retardant Treatments 26
Specifying Plywood 27

Panel Construction

CANPLY EXTERIOR plywood is an engineered panel built up from sheets of veneer glued together with a waterproof resin adhesive. The thickness and orientation of the plies determine the performance of the panel. The veneers are united under high temperature and pressure with a resin glue that is completely waterproof, making the plywood suitable for use under conditions of extreme exposure to moisture.

Species

Plywood marked CANPLY EXTERIOR may be designated as Douglas Fir (DFP), Canadian Softwood (CSP), Aspen or Poplar plywood.

CANPLY EXTERIOR Douglas Fir plywood is manufactured with faces of Douglas Fir veneers. The inner plies and some backs may be of veneers of the selected coniferous species shown in Table 1. The permissible species for CANPLY EXTERIOR Canadian Softwood plywood are also shown in Table 1. For a complete list of allowable species in CANPLY Poplar plywood, please refer to the standard CSA O153.

Manufacture

The manufacturing process begins by conveying selected logs to a barker where they are rotated against a steel claw to strip the bark and debris from the log surface. The logs are then cut into peeler blocks. In conformance with today's standards of sustainable forestry, the logs we harvest are from secondary growth forests and average 25cm (10) in diameter.

After conditioning, peeler blocks are moved to a lathe where they are set in the chucks by an automatic charger. Using laser sensors, the block is imaged and automatically aligned in the lathe to maximize veneer recovery. As the block is rotated, the honed steel blade of the lathe is brought in contact with it, peeling a continuous sheet of veneer.

As veneer is produced it is directed to semiautomatic clippers that scan the veneer, remove oversize defects and cut it to width for sorting and stacking. Standard widths are stacked automatically and random widths manually. Veneer is passed through moisture sensors and segregated by moisture content. Segregation is necessary as veneer with different moisture contents requires different drying cycles.
Veneer is dried in steam or gas-heated ovens at temperatures ranging from 160 to 200 °C. The speed at which the veneer moves through the dryer depends on the thickness of the veneer and its moisture content.

After passing through the dryer, electronic moisture detectors mark all veneer in excess of the moisture content allowed for gluing. The veneer is stacked separately and later re-dried.

After dying, the veneer is optically scanned, imaged on a computer and further sorted according to grade. Narrow widths may be directed through a composer where edges are cleaned, squared and "welded" into continuous sheets and clipped into standard widths.

Substandard veneer with oversize imperfections is either discarded or channeled to patching machines where the imperfections are neatly replaced with sound wooden patches.

Sound veneer then moves to the glue spreader or automatic lay up line where the veneers are uniformly coated with resin glue and laid at right angles to the adjacent veneers. This cross-lamination accounts for plywood's exceptional two-way strength and dimensional stability.

After lay up, the veneer sandwiches go to the hot press, the key operation in the manufacturing process. Here, depending upon the thickness of the plywood panel, one or more sandwiches are loaded into each press opening. The press is then hydraulically closed and the panels subjected to a temperature of 150 °C and a pressure of 1.38 MPa which cures the glue. The resin glue, when cured in the hot press, produces an inert water-proof bond.

After removal from the hot press, trim saws cut the plywood panels to the required dimensions, usually 1220 mm by 2440 mm (4' x 8'). Panel edges and panel ends are trimmed in consecutive operations.

Panels are then graded as sheathing or selected for further finishing. Panels to be produced as sanded grades pass to a sander where face and back are simultaneously sanded smooth.

Any minor imperfections remaining in the face and back veneers may be repaired with wood inlays or synthetic filler before the panels are finally graded by skilled inspectors.

All grades of plywood produced by CertiWood™ members are then stamped with the registered certification mark CANPLY EXTERIOR before leaving the mill.

Most wood waste during manufacture is collected and burned in high efficiency burners to be converted into heat or electricity, offsetting most of the mill's energy needs.

3 DR 6

Table 1. Species permitted in CANPLY Exterior Plywood

	CSA O121 DFP		CSA O151 CSP		CSA O151 ASPEN		CSA O153 POPLAR	
COMMON NAME	Faces & Backs	Inner Plies	Faces & Backs	Inner Plies	Faces & Backs	Inner Plies	Faces & Backs	Inner Plies
Douglas Fir	●	●		●		●		●
True fir *		●	●	●		●		●
Western white spruce*		●	●	●		●		●
Sitka spruce*		●	●	●		●		●
Lodgepole pine *		●	●	●		●		●
Western hemlock*		●	●	●		●		●
Western larch*		●	●	●		●		●
Trembling aspen		●		●	●	●	●	●
White birch		●	●	●		●		●
Balsam fir		●	●	●		●		●
Eastern spruce		●	●	●		●		●
Eastern white pine		●	●	●		●		●
Red pine		●	●	●		●		●
Jack pine		●	●	●		●		●
Ponderosa pine		●	●	●		●		●
Western white pine		●	●	●		●		●
Eastern hemlock		●	●	●		●		
Tamarack		●	●	●		●		●
Yellow cedar		●	●	●		●		●
Western red cedar			●	●		●		●
Balsam poplar		●		●		●	●	●
Black cottonwood		●		●		●	● **	● **

* *Permitted on the backs of 6, 8, 11 and 14 mm Good One Side DFP*
** *Not permitted in sheathing grades*

Steps in the manufacture of plywood

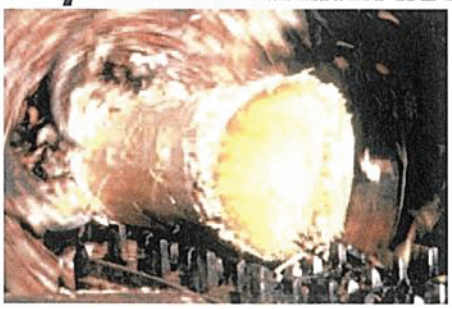

1. *The log emerges from the barker after having been stripped.*



2. *Logs are conditioned using steam or hot water to improve peel quality*

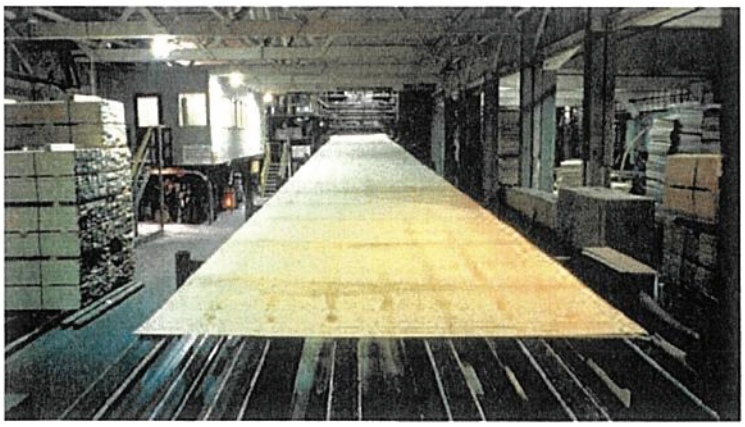

3. *At the lathe, a sharp blade peels the log, now called a block, into a continuous sheet of veneer.*

4 DE 6

PLYWOOD GRADES AND PRODUCTS

CertiWood™ members produce a wide range of CANPLY EXTERIOR plywood grades and products. Grade names in general are based on the quality of the veneers used for the face and back of the panel. CANPLY EXTERIOR plywood grades are shown in Table 3. A list of proprietary CANPLY Exterior Plywood products is given in Table 4.

Overlaid Plywood

Plywood is also manufactured with overlays which improve the appearance and durability of the panel. The overlays are bonded to the face veneers of the plywood by heat and pressure. This process seals the overlay to the wood to form an inseparable bond stronger than the wood itself. The resin content of the overlay determines whether the final product is called Medium or High Density Overlaid plywood.

Medium Density
The resin impregnated face presents a smooth uniform surface intended for high quality paint finishes. Some evidence of the underlying grain may appear. Overlay is produced in a natural buff colour and certain other colours.



EASY T&G - Floor profile

Popular uses for Medium Density Overlaid plywood are flat, lap and bevel sidings; and sundecks, soffits and accent panels in residential construction. Other applications include boats, highway signs and many other commercial uses.

High Density
The resin impregnated face is hard, smooth, and chemically resistant. No further finishing with paint or varnish is necessary. The overlay is usually produced in a whitish semi-opaque colour but other colours may be used by manufacturers for identification. Major uses for High Density Overlaid plywood include fine finish concrete formwork, storage bins, liquid tanks and signs.

Mill Specialties

Mill specialties are variations of the plywood grades and products shown in Tables 3 and 4. These panels are manufactured by a number of member companies and marketed under their own brand names. Mill specialities include patterned, overlaid, textured, brushed, embossed, striated, grooved and pre-finished panels for decorative use.

Tongue and Groove Plywood

T&G plywood has a factory-machined tongue along one of the long edges and a groove along the other. T&G panels interlock to ensure the effective transmission of loads across joints, eliminating differential deflection between adjoining panel edges and making the use of blocking or H-clips at longitudinal joints unnecessary.

CertiWood™ members manufacture two patented T&G panels, under one name – EASY T&G. These panels have T&G edges specifically designed for roof and floor sheathing. Panel installation is fast and easy with these patented edge profiles, exclusive to CertiWood™ members.

Concrete Form Panels

All plywood bearing the registered certification mark CANPLY EXTERIOR is suitable for concrete formwork because it is manufactured with waterproof glue.

CANPLY EXTERIOR DFP is available in sanded and unsanded grades and in special high strength constructions. CANPLY EXTERIOR CSP is available in unsanded grades only. Sanded grades produce a smooth, wood grain finish valued by many architects. Unsanded grades are suitable for formwork where the appearance of the concrete is less important such as in sub-surface foundations.

CANPLY EXTERIOR plywood is also available edge sealed, treated with chemical release agents, and with resin impregnated cellulose fibre overlays. Overlays produce the highest quality concrete finish. They also help protect the plywood from oil and water, simplify form stripping and extend the service life of concrete forms.
COFI FORM PLUS and COFI FORM are special high-strength constructions of DFP panels designed specifically for use as concrete formwork. These panels are significantly stiffer than standard construction of DFP in wet service conditions because of stricter limits on species and ply thicknesses during manufacture. COFI FORM PLUS is the stiffest Douglas Fir panel manufactured by CertiWood™ members (Table 4).

SIZES AND THICKNESSES

CANPLY EXTERIOR plywood is manufactured in a size of 1220 mm by 2440 mm, the metric equivalent of the familiar 4 ft by 8 ft panel. It is also available in a metric size of 1200 mm by 2400 mm (Table 2). Net face widths for EASY T&G are given in Table 2.

CANPLY EXTERIOR plywood is manufactured in a range of thicknesses from 6 mm to over 30 mm as shown in Table 2.

NOTE: CANPLY EXTERIOR plywood panels are available in additional sizes and thicknesses on special order.



EASY T&G - Roof profile

Table 2. Sizes and Thicknesses of CANPLY EXTERIOR Plywood

Thickness				Size
Sanded Grades		Sheathing and Select Grades		
6 mm	19 mm†	7.5 mm	20.5 mm†	Lengths Available up to 2500 mm
8 mm	21 mm†	9.5 mm	22.5 mm†	
11 mm	24 mm†	11 mm†	25.5 mm†	
14 mm	27 mm†	12.5 mm†	28.5 mm†	Widths Available from 600 mm to 1250 mm
17 mm†	30 mm†	15.5 mm†	31.5 mm†	
		18.5 mm†		
All thicknesses are metric, but some approximate imperial dimensions, e.g. 6 mm (1/4 in.)				*For EASY T&G panels, deduct 15 mm from the nominal width for net face coverage.*
† *Available as square edge or with EASY T&G edge.*				

5 DE 6

Table 3. CANPLY EXTERIOR Plywood Grades

Grade*	Product**	Veneer Grades**			Characteristics	Typical Applications
		Face	Inner Plies	Back		
Good Two Sides (G2S)	DFP	A	C	A	Sanded. Best appearance both faces. May contain neat wood patches, inlays or synthetic patching material.	Furniture, cabinet doors, partitions, shelving, concrete forms and opaque paint finishes
Sanded	Poplar					
Good One Side (G1S)	DFP	A	C	C	Sanded. Best appearance one side only. May contain neat wood patches, inlays or synthetic patching material.	Where appearance or smooth sanded surface of one face is important. Cabinets, shelving, concrete forms.
Select - Tight Face (SEL TF)	DFP	B***	C	C	Surface openings shall be filled and may be lightly sanded.	Underlayment and combined subfloor and underlayment. Hoarding. Construction use where sanded material is not required.
Select (SEL)	DFP Aspen Poplar CSP	B	C	C	Surface openings may be filled and may be lightly sanded.	
Sheathing (SHG)	DFP Aspen Poplar CSP	C	C	C	Unsanded. Face may contain limited size knots, knotholes and other minor defects.	Roof, wall and floor sheathing. Hoarding. Packaging. Construction use where sanded material is not required.
High Density Overlaid (HDO)	DFP Aspen Poplar CSP	B***	C	B***	Smooth, resin-fibre overlaid surface. Further finishing not required	Bins, tanks, boats, furniture, signs, displays, forms for architectural concrete.
Medium Density Overlaid (MDO) MDO 1 Side	DFP Aspen Poplar CSP	C***	C	C	Smooth, resin-fibre overlaid surface. Best paint base.	Siding, soffits, paneling, built-in fitments, signs, any use requiring a superior paint surface.
MDO 2 Sides	DFP Aspen Poplar CSP	C***	C	C***		

Table 4. CANPLY Exterior Plywood Proprietary Products

Product*	Product Standard**	Grades**	Characteristics	Typical Applications
EASY T&G ROOF	DFP CSP	SHG or SEL	Milled with patented edge profile for easy installation and edge support without H-clips	Roof sheathing and decking for residential, commercial and industrial construction.
EASY T&G FLOOR	DFP CSP Aspen Poplar	SHG SEL SEL TF	Milled with a patented edge profile for fast, easy installation.	Floor and heavy roof sheathing for residential, commercial and industrial construction.
COFI FORM PLUS and COFI FORM	DFP (limits on thickness and species of face and inner plies)	SEL G1S G2S SPECIALTY HDO MDO	Special construction Douglas Fir panels with greater stiffness and strength providing improved properties particularly in wet service conditions. Available in regular sanded and unsanded grades and speciality grades with resin-fibre overlays. Also available with factory-applied release agent.	Concrete forms and other uses where wet service conditions or superior strength requirements are encountered.

* All grades and products including overlays bonded with waterproof resin glue.
** For complete veneer and panel grade descriptions see CSA O121 (DFP), CSA O151 (CSP) and CSA O153 (Poplar).
*** Indicates all openings are filled.

6 DR 6

STANTEC PROJECT #: 110126045

SUBMITTAL # SU-032 cascadia clips

This review by Stantec is for general conformance with the design concept of Stantec's design of the:

- ☑ Architectural
- ☐ Structural
- ☐ Mechanical
- ☐ Electrical
- ☐ Other

component(s) only and does not mean that Stantec has verified or approves the shop drawing(s). The Contractor remains solely responsible for the shop drawing(s) and this review by Stantec does not relieve the Contractor of the Contractor's responsibility for errors or omissions in the shop drawing(s) or for meeting all requirements of the contract documents. This review does not mean that Stantec approves the detailed design inherent in the shop drawing, responsibility for which shall remain with the Contractor submitting same, nor does this review mean that Stantec accepts any deviation of the shop drawing(s) from the contract documents. The Contractor is responsible for confirming all dimensions and correlating them at the job site, for all construction means, methods and techniques, and for coordination of construction work of all trades, including coordination of all shop drawings.

Stantec

- ☑ REVIEWED
- ☐ REVIEWED, AS NOTED
- ☐ REVISE AND RESUBMIT
- ☐ NOT REVIEWED

DATE 2019-05-15

BY TFlender



ENERGY EFFICIENT
LOW COST
FAST INSTALLATION

CASCADIA CLIP®
FIBERGLASS THERMAL SPACER



CONTENTS

Thermal Modeling & Field Comparison	3
Cost Comparison	4
Installation	5
Combustibility + Code Compliance	6
Thermal Performance	7
Cascadia Clip® Calculator	8
Structural Performance	10
Engineering	11
Specifying	12
Standard Details	13

The Cascadia Clip® cladding support system for exterior insulated walls improves energy efficiency and lowers construction cost. It separates steel girts from the back-up wall and allows the insulation value to be fully realized. This eliminates degradation of insulation value that occurs with traditional steel girts and clips.

EIGHT SIZES AVAILABLE



"The Cascadia Clip® wall is about cost-neutral to a single continuous Z-girt wall, but with twice the performance."

Ron Blankert, President, BJ Plastering

"This is what I really think is the definition of good green design. It is unobtrusive, it solves a serious problem, it is easy to use and does its job really well."

Lloyd Alter, Managing Editor, Toronto


sopra
SOPREMA

THERMAL MODELING & FIELD COMPARISON

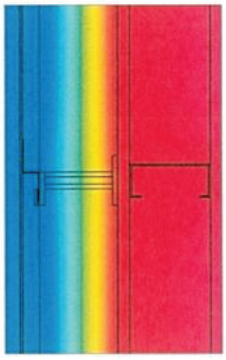

Cascadia Clip® system

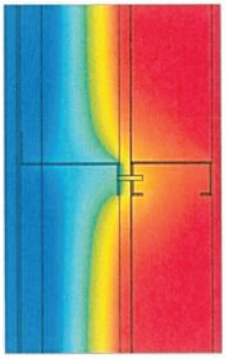

Typical Z-girt system

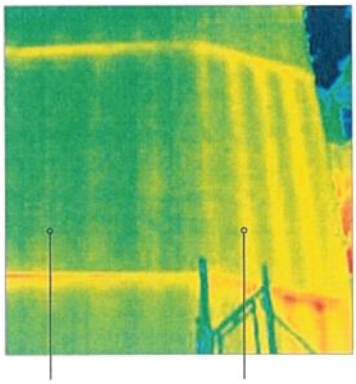

With Cascadia Clip® system

With typical Vertical Z-girt system

R-16.8 FT²·°F·HR/BTU*

Cascadia Clips® limit heat flow through wall.

*With 4" of mineral wool

*Whole-wall effective insulation value

*At 16' O.C horizontally + 36" vertically

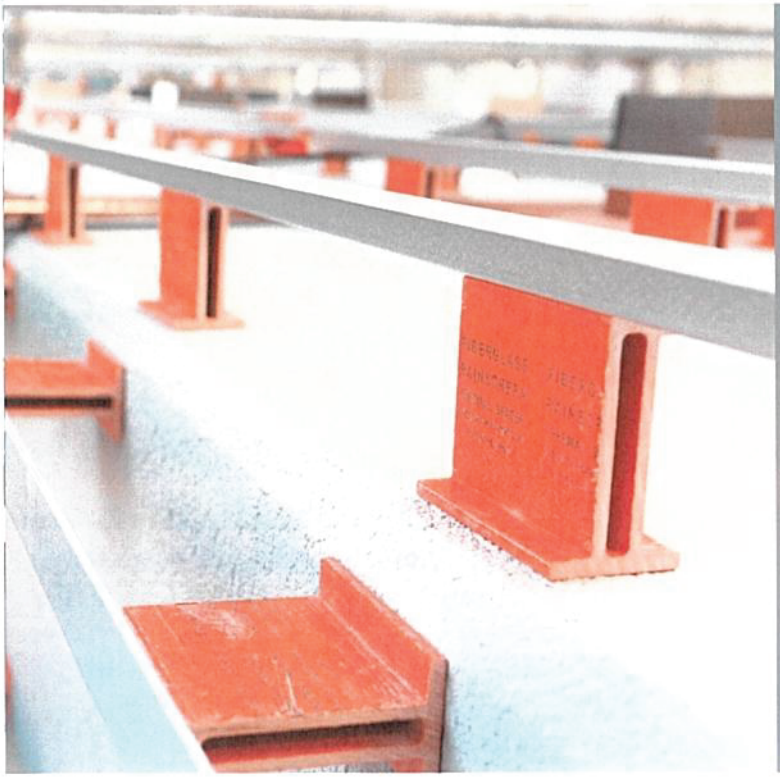

A THERMAL WASHER

Because Cascadia Clips® are used to separate traditional Z-girts or hat tracks from the backup wall structure, they are universal to any type of cladding.

They will support any cladding that would normally be attached with these methods, or any other type of rail system.

COST COMPARISON

CASCADIA CLIP® SYSTEM

R-16.8 EFFECTIVE Easily increased to R-28+

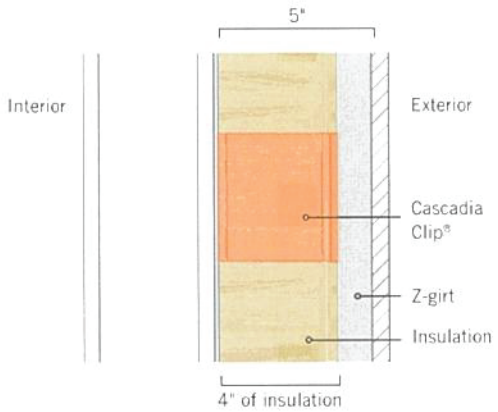

Cost of clips and girts ~$0.13 per ft² / per R-value

Additional indirect costs

+ One layer of insulation

VERTICAL + HORIZONTAL DOUBLE GIRT SYSTEM

R-15 EFFECTIVE Not easily increased

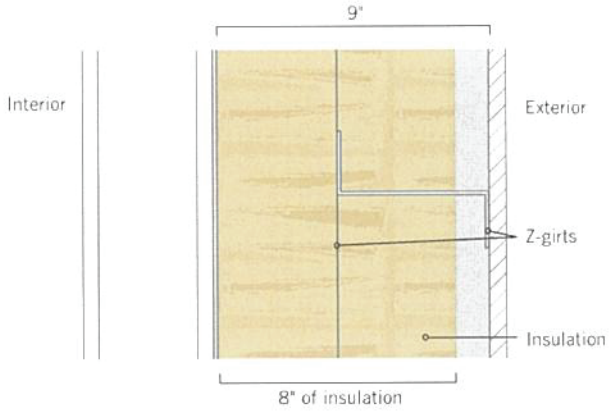

Cost of girts ~$0.16 per ft² / per R-value

Additional indirect costs

+ Twice the insulation
+ Twice the labour
+ Twice the flashing
+ More lost floor space that the owner cannot use or sell

CONSTRUCT COST-EFFECTIVE HIGH R-VALUE WALLS

Since the effective R-value is extremely efficient compared to any other cladding support assembly, a much thinner wall will accomplish the same or better results.

The cost savings available from using Cascadia Clips® can be as much as $5 per square foot compared to other, more conventional cladding support systems that attempt to meet similar performance targets.

WHEN SPACING OF THE CLIPS IS OPTIMIZED, THE CASCADIA CLIP IS THE CHEAPEST $/R-VALUE OF ANY OTHER CLIP SYSTEM ON THE MARKET.

VERTICAL GIRT APPLICATION

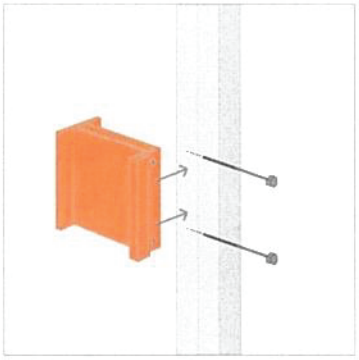

STEP 1

Attach clips to steel girt

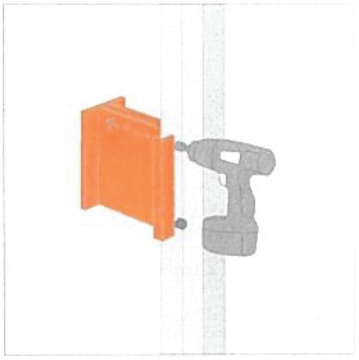

STEP 2

Fasten girts and clips to the wall with screws; long screws connect girts directly to the structure, passing through the clips

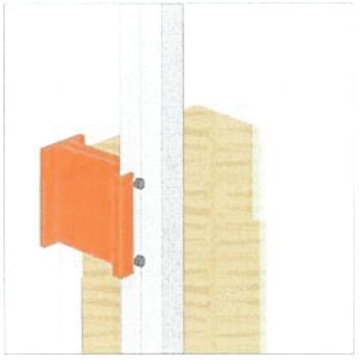

STEP 3

Install insulation and fasten next girt

HORIZONTAL TRACK APPLICATION



The Cascadia Clip™ can be used with a horizontal hat-track; slotted tracks allow flexibility for aligning clips to studs

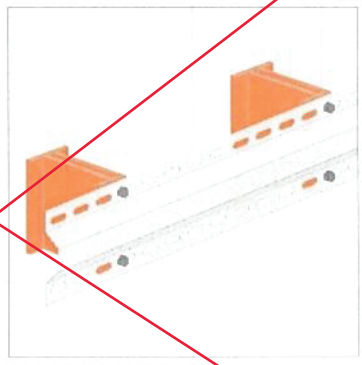

A simple and effective way to support vertically oriented cladding; fasteners will hold assembly together for installation convenience

ADJUSTABILITY

The Cascadia Clip now has accessories to handle uneven wall substrates. Please visit cascadiaclip.com or contact us for more info on the adjustable Cascadia Clip.

THE CASCADIA CLIP® IS **FULLY CODE-COMPLIANT** FOR FIRE PERFORMANCE IN BOTH CANADA AND THE USA FOR **EVERY** TYPE OF WALL ASSEMBLY.

1. The Clips are intermittent, both vertically and horizontally, and almost completely covered by non-combustible mineral wool. Because of this, they do not alter the wall's fire protection in any way – for better or for worse.
2. Fire does not damage the Clips' ability to hold the cladding in place, because cladding is attached to steel Z-girts which are attached directly to the backup wall with screws passing completely through the clip.

The fiberglass clips are not a structural connection for the cladding: the structural connection of cladding to backup wall is done via steel girts and screws.

CANADA

While fiberglass is combustible, the clip functions within non-combustible wall assemblies as a minor combustible component, in accordance with Article 3.1.5.2 of the Model National Building Code.

The clip is enclosed within the non-combustible insulation and the fasteners attach the cladding directly to the structure. Fire protection and building code professionals support the clip as a minor combustible component, in compliance with the building code.

The Building and Safety Standards Branch of the BC Ministry of Energy and Mines confirmed that the Cascadia Clip® is a minor combustible component, acceptable for use in non-combustible construction.

USA

The Cascadia Clip® has been approved through IAPMO for a Uniform Evaluation Service report, evaluating the Clip for use in projects across the USA, in all types of construction, including non-combustible wall assemblies. The IAPMO UES report evaluates the Clip for the 2012 and 2015 international Building Code, ensuring that the clips have met the most rigorous standards and are in full compliance. Using comprehensive fire-testing data, including a successful NFPA 285 report with combustible cladding, the evaluation approves the clip for use in non-combustible wall assemblies.

It also includes analysis and approval of durability, structural capacity, and more. Cascadia Clips® are the *only* thermally improved cladding support system with a code evaluation. Please contact us or visit our website for more information or a copy of this report!

THERMAL PERFORMANCE

	STEEL FRAMED		CONCRETE	WOOD FRAMED	
	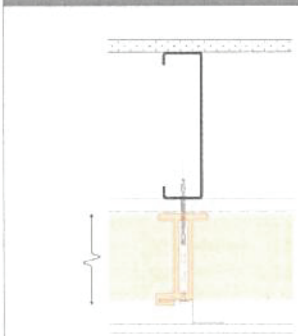		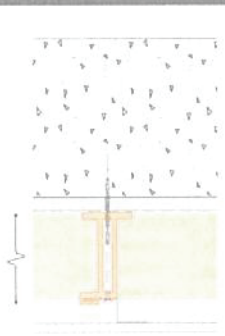	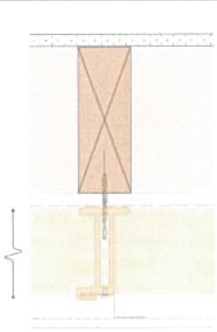	
	3⅝" (NO BATTS)	3⅝" (BATTS IN CAVITY)	6" CONCRETE	2X4 (BATTS IN CAVITY)	2X6 (BATTS IN CAVITY)
Clip / insulation depth (in.)	Effective R-values ($FT^2 \cdot °F \cdot HR/BTU$)				
2	10.9	16.7	9.7	20.6	26.4
2.5	12.1	18.4	11.5	22.7	28.4
3	13.7	20	13.1	24.2	30
3.5	15.3	21.7	14.8	26.2	32
4	16.8	23.4	16.5	27.8	33.7
5	19.8	26.6	19.8	31.2	37.1
6	22.7	29.7	23	34.6	40.4
8	28.5	36	29.5	41.2	47.1

- All results using exterior mineral fibre insulation (R4.2/inch).
- Steel studs are 18ga material.
- Steel and wood studs assuming clip spacing of 16" horizontally and 48" vertically.
- Concrete assuming clip spacing of 24" horizontally and 36" vertically.
- More effective R-value results based on different spacings and combinations of wall assemblies can be found on our website using our Cascadia Clip® Calculator.
- If allowed by the cladding, Cascadia Clips can be spaced out even further in many cases.

CASCADIA CLIP® CALCULATOR: CALCULATOR.CASCADIACLIP.COM

INPUTS

Backup Wall	2x4 Steel studs	Options of 16, 18, 20 gauge
	2x4 Wood studs	
	2x6 Wood studs	
	6" Concrete	
Batts in Cavity	Yes	Yes for wood, no for concrete, split insulation allowed for steel studs
	No	
Exterior Insulation	R4.2/inch – mineral wool	
	R6.2/inch – spray foam	
Fastener Type	Galvanized Steel	Standard offering
	Stainless Steel	Better thermal performance
Horizontal Spacing	16	Standard studs
	24	Suggested for concrete
	32	With light cladding, can go every other stud
Cladding Dead Load	1-20 psf	Have done projects up to 27psf

The online Cascadia Clip® Calculator helps you calculate the spacing required for your specific project.

You input the variables specific to your project, and use the outputs to find the smallest clip at the largest spacing that meets the project requirements for thermal performance and allowable wind loading. This helps you save money by using the right number of clips - not more, not less.

This tool is **fully engineered**, and when paired with the engineering reports that corroborate the results, can be used as the submittal documents.

There are over 75,000 combinations of walls, with thermal and structural results for each.

OUTPUTS

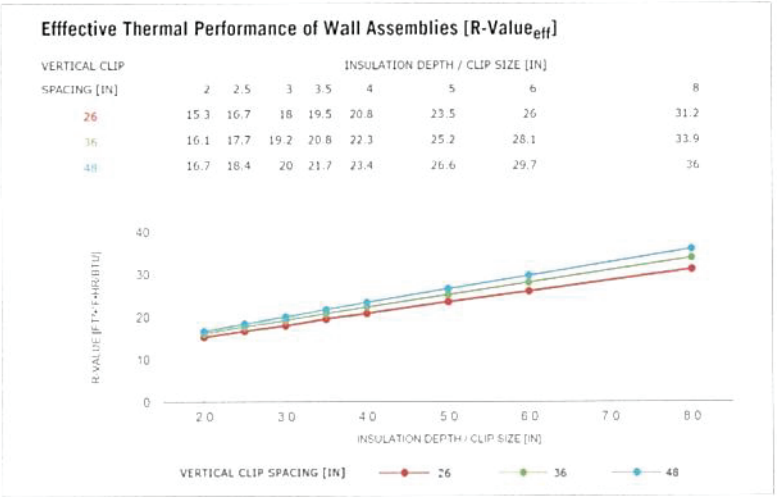

Efffective Thermal Performance of Wall Assemblies [R-Value$_{eff}$]

VERTICAL CLIP SPACING [IN]	INSULATION DEPTH / CLIP SIZE [IN]							
	2	2.5	3	3.5	4	5	6	8
26	15.3	16.7	18	19.5	20.8	23.5	26	31.2
36	16.1	17.7	19.2	20.8	22.3	25.2	28.1	33.9
48	16.7	18.4	20	21.7	23.4	26.6	29.7	36

Tables and graph show the same thing in different formats. Values show the effective R-values of the wall assembly, based on the chosen inputs and combination of clip sizes and vertical spacing.

Example Thermal Output from Online Calculator

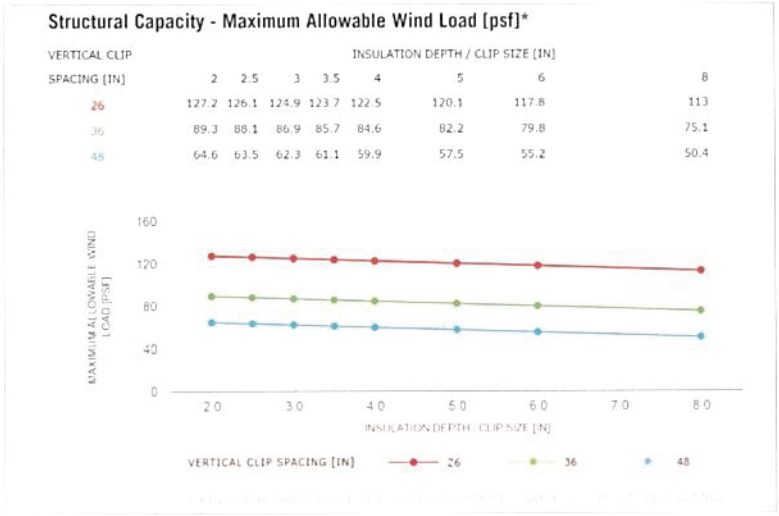

Structural Capacity - Maximum Allowable Wind Load [psf]*

VERTICAL CLIP SPACING [IN]	INSULATION DEPTH / CLIP SIZE [IN]							
	2	2.5	3	3.5	4	5	6	8
26	127.2	126.1	124.9	123.7	122.5	120.1	117.8	113
36	89.3	88.1	86.9	85.7	84.6	82.2	79.8	75.1
48	64.6	63.5	62.3	61.1	59.9	57.5	55.2	50.4

Tables and graph show the same thing in different formats. Values show the allowed suction wind pressures on the wall assembly, based on the chosen inputs and combination of clip sizes and vertical spacing. Built in safety factor of 3.0.

Example Structural Output from Online Calculator

Choose the smallest clip at the largest spacing that meets both the thermal and structural requirements of the project.

PREMISE OF STRUCTURAL DESIGN

The clips are intermittent and are sandwiched between continuous Z-girts to the outside and the sheathing of the back-up wall to the inside. The fasteners (two per clip) attach the Z-girts to the back-up wall studs, passing through holes in the clips. The clips and fasteners are required to resist vertical loads imposed by cladding weight, and horizontal loads imposed by wind pressures and inertial forces from earthquakes. Wind loads are assumed to govern lateral load scenarios.

Due to the intermittent nature of the clips, the dead load of the exterior cladding causes rotational force in the clip. This creates tension in the upper screw; the pull-out of this screw is the governing factor of the Cascadia Clip® design.

The pull-out force on the upper screw has two contributing factors

- Dead load of the cladding
- Negative wind pressure on the cladding

Assumptions

- All clips share vertical load equally
- Clips act independently to resist overturning

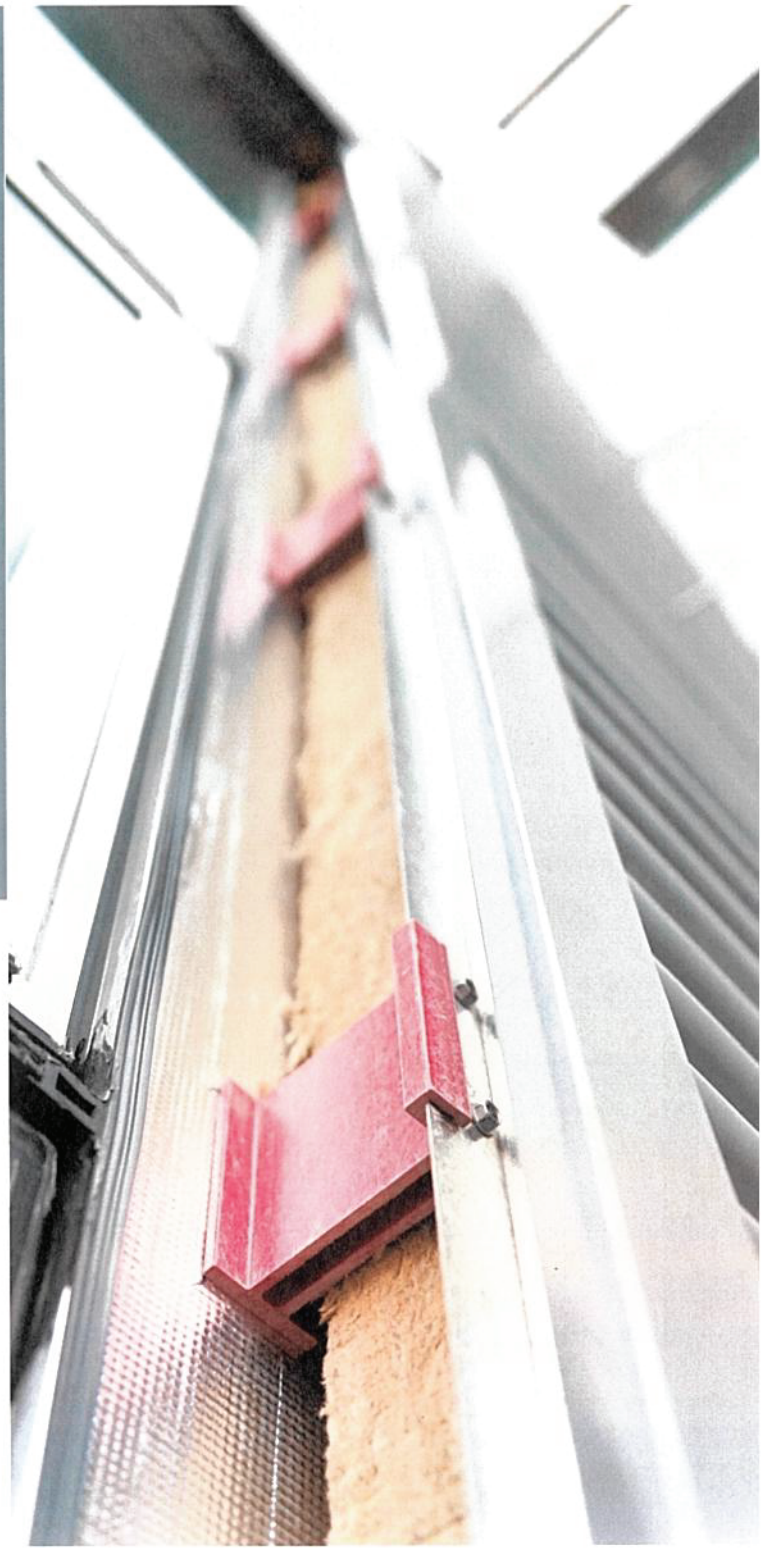

SCREW FASTENER DESIGN PARAMETERS

Sheathing thickness		12.7 mm	0.5 in
Vertical girt depth		25.4 mm	1 in
Cladding thickness		19.05 mm	0.75 in
Cascadia Clip® size	Depth	Varies	Varies
	Length	101.6 mm	4.0 in
	Screw edge distance	12.7 mm	0.5 in
	Screw spacing	76.2 mm	3.0 in

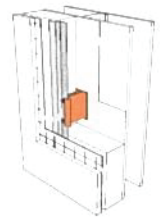

ALLOWABLE FASTENER LOADS (FACTOR OF SAFETY: 3.0)

STEEL STUD SUBSTRATE – RECOMMENDED FASTENER: LELAND INDUSTRIES – ¼ X 14 MASTER DRILLER NO.2 MINI DRILL POINT, DT 2000 COATED				
For 20 gauge studs	T_{ALLOW}	725 N	163 lb	Leland Industries – Manufacturer's Testing
	V_{ALLOW}	703 N	158 lb	Deitrich
For 18 gauge studs	T_{ALLOW}	1023 N	230 lb	Leland Industries – Manufacturer's Testing
	V_{ALLOW}	1041 N	234 lb	Deitrich
WOOD STUD SUBSTRATE – RECOMMENDED FASTENER: LELAND INDUSTRIES – ¼ X 10 MASTER GRIPPER, DT 2000 COATED				
Wood studs + plywood sheathing	T_{ALLOW}	979 N	220 lb	Values from Leland Master Gripper 14 x 10 with 1" effective penetration into Douglas Fir
	V_{ALLOW}	654 N	147 lb	
CONCRETE/CMU SUBSTRATE – RECOMMENDED FASTENER: LELAND INDUSTRIES – #14 X 15 CONCRETE SCREW, DT 2000 COATED				
4000 psi Concrete – 1.5" embedment	T_{ALLOW}	1370 N	308 lb	Intertek Testing of Leland Industries 14-15 concrete screws; predrilled holes at 3/16" diameter
Hollow Concrete Masonry Units – 1.0" embedment	T_{ALLOW}	672 N	151 lb	Intertek Testing of Leland Industries 14-15 concrete screws; predrilled holes at 3/16" diameter

TECHNICAL DETAILS

The design information provided in this brochure has been prepared based on a review of industry available screw pull-out and shear load test data, with resultant factors of safety in the connection design ranging from 3 to 4. The specific design curves included in the brochure are based on a FS of 3.0 utilizing the fasteners identified in the above chart as 'Recommended Fasteners' for each substrate type. It is important to note that in the design curves for applications in 20 ga and 18 ga steel framing, Leland's ¼" Master Driller screw with no.2 mini drill point is used, and provides greater capacity than common no.3 drill points. The use of mini drill point screws provides for reasonable ease of installation, while maintaining significantly higher pull-out resistances than no.3 drill points in light gauge steel framing.

The design of screw fastened connections is a task normally completed or reviewed by a structural engineer. The online Cascadia Clip® Calculator is a fully engineered design tool, complete with stamped engineering reports, to illustrate acceptable design application of the Cascadia Clips® under numerous building and environmental conditions. This calculator can be used for engineered submittal documents of the wall assembly, as long as the wall configurations are upheld.

The Cascadia Clip® is a suitable substrate for a number of cladding systems, including stucco. Stucco is inherently prone to cracking, and Cascadia assumes no responsibility whatsoever for any cracking of a stucco application.

HOW TO SPECIFY

Cascadia Clips® – Fiberglass Thermal Spacers
2", 3.5", 4", 5", or 6" depth

Steel Z-girts
18 gauge; sizing and coating by engineer/specifier. Most common configuration: 18 gauge with Galvalume AZM 150 coating (or AZ-50 – USA) 1.5" x 1" x 1.25" size.

Screws
Steel studs: ¼x14 x 4" Master Driller no.2 point DT2000 by Leland Industries (or 5", 6", 7", 8")

Wood studs: ¼x10 x 4" Master Gripper DT2000 by Leland Industries (or 5", 6", 7", 8")

Concrete/CMU: #14x15 x 3.5" Concrete Screw DT2000 by Leland Industries (or 5", 5.5", 6.5", 7.5")

All fasteners listed above are available through Cascadia Windows Ltd.

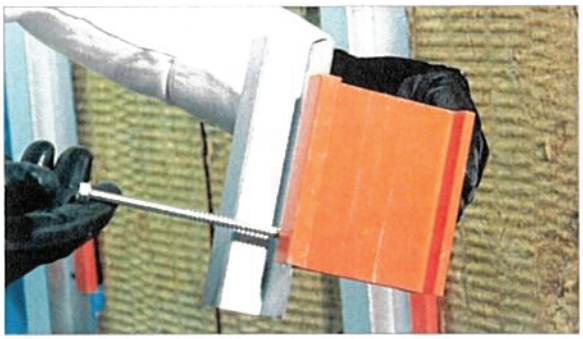

Insulation
CavityRock® DD by Roxul, RainBarrier45® by Thermafibre, or approved alternative [specifier to input total insulation thickness; match the depth of the Cascadia Clip]

Spray Foam Insulation
Various types may be used

DECLARE LABEL

Declare.

Cascadia Clip®
Cascadia Windows Ltd.
Final Assembly: Langley, BC, Canada
Life Expectancy: 200+ Years
End of Life Options: Salvageable/Reusable in its Entirety, Landfill

Ingredients:

Cascadia Clip Fiberglass Pultrusion: Glass Fiber (La Crosse, WI); **Polyester Resin: Base Resin - Polyester** (LaCrosse, WI), **Calcium Carbonate Filler** (LaCrosse, WI), **Polystyrene, Release Agent*, Pigment***

*LBC Temp Exception RC-EA Proprietary Ingredients <1%

Living Building Challenge Criteria:

CAN-0083	04/21/2016
VOC Content: N/A	VOC Emissions: N/A
Declaration Status	■ LBC Red List Free □ LBC Compliant □ Declared

Powered by LIVING FUTURE INSTITUTE

VRCA AWARD

Cascadia Clips® received an award from the Vancouver Regional Construction Association (VRCA) in 2011 in the category of ***Sustainability and Innovation.***

VRCA

ACCLAIMED BY

BC EXPORT AWARDS

BC's Leading Innovators BCBUSINESS

NRC NEW TECHNOLOGY AWARD FINALIST

WTN TIME 100 WORLD TECHNOLOGY AWARD FINALIST

GLOBE AWARDS INNOVATION AWARD WINNER

LIVING BUILDING CHALLENGE CERTIFIED

Red List Free

OUTSIDE 90° CORNER

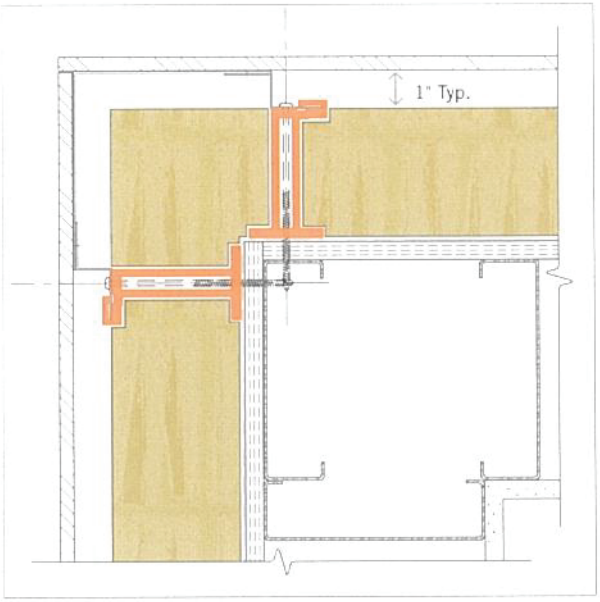

VERTICAL WALL SECTION

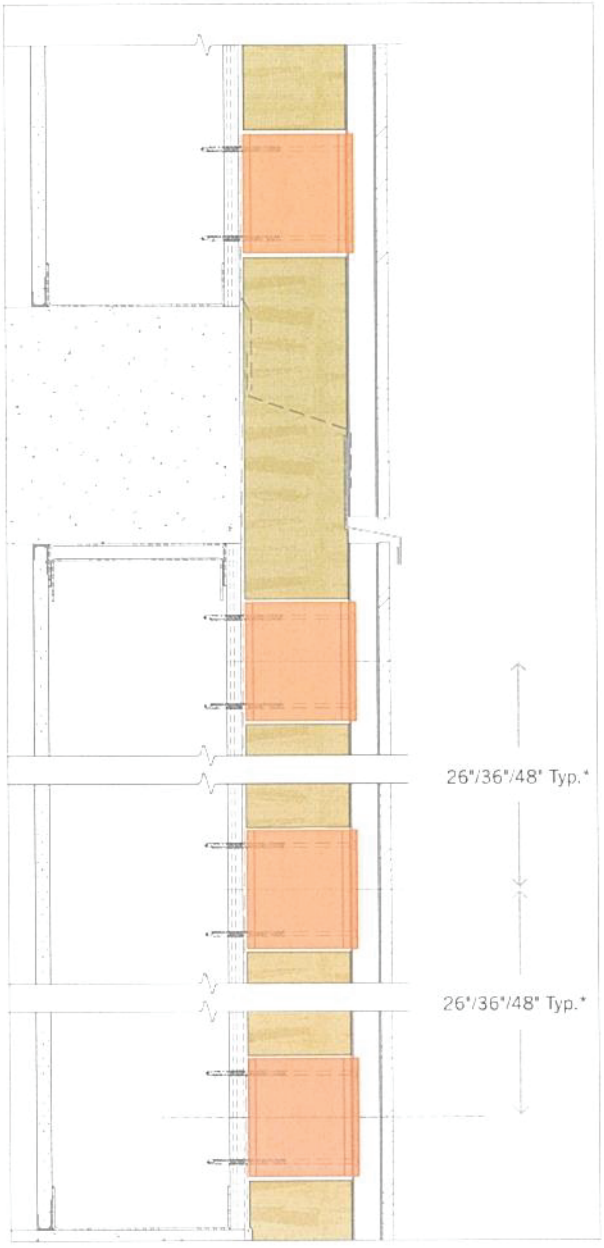

HORIZONTAL WALL SECTION

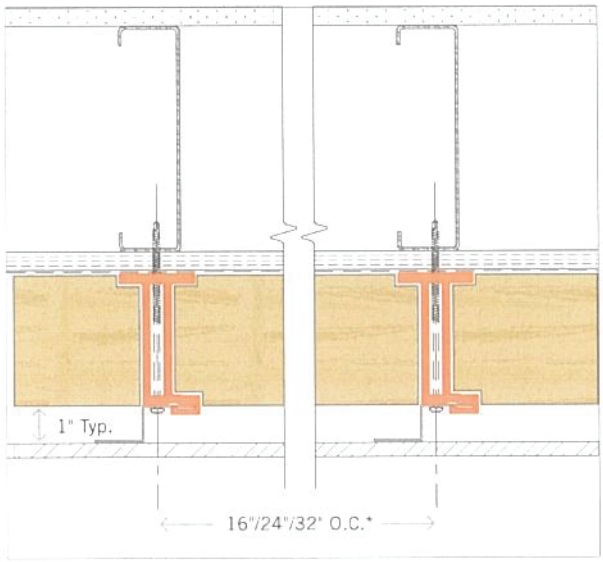

The Cascadia Clip® is a registered industrial design and patented product. Additional patents pending.
For more technical drawings and information, visit **www.cascadiaclip.com**

**Depending on spacing*

FOR FURTHER INFORMATION
ON THE CASCADIA CLIP®

CALL **604 857 4600**
EMAIL **INFO@CASCADIACLIP.COM**

CONTACT A TECHNICAL SALES REP IN
YOUR AREA BY VISITING CASCADIACLIP.COM
SEE THE 'CONTACT US' PAGE.

CASCADIA WINDOWS LTD.
LANGLEY, BRITISH COLUMBIA
604 857 4600

CASCADIACLIP.COM

CASCADIA
WINDOWS & DOORS

REVIEWED BY CONTRACTOR

Kudlik Construction Ltd.

NAME: Sandra Rousseau P.Eng

DATE: Mar 04, 2019

NORCLAIR
MÉCANIQUE DE PROCÉDÉ

SHOP DRAWINGS

DA-MP-33R2 Piping support Primary **Date :** 2019-03-01

Information general	
Project : **WWTP UPGRADE - IQALUIT**	
Client : Kudlik Construction Ltd. To : Sandra Rousseau P.Eng., Project Manager	Project number : **2018-062** E-mail : srousseau@kudlik.biz
Contractor : **Norclair inc.**	Project number Norclair : **P1039**
Address : 1100, Montée Masson, Laval, QC, Canada H7E 4P2	
Project Manager : Hugo Chartier, Project Manager E-mail: hchartier@norclair.ca	
Phone : 450-688-4012 # 706	Cell. : 514-703-0263

Information, subcontractor or supplier	
Sub/supplier : Norclair	
Contact :	Phone :

Information on the equipment	
Speciality : **Process**	
Equipment : Piping support (primary)	
Drawing reference :	
Specification reference : **40 05 13** (Page xx / xx)	Division :
Article :	Number of pages : 70

CONSULTANT APPROVAL

STANTEC PROJECT #: 110126045

This review by Stantec is for general conformance with the design concept of Stantec's design of the:

☐ Architectural ☐ Electrical
☑ Structural ☐ Other
☐ Mechanical

component(s) only and does not mean that Stantec has verified or approves the shop drawing(s). The Contractor remains solely responsible for the shop drawing(s) and this review by Stantec does not relieve the Contractor of the Contractor's responsibility for errors or omissions in the shop drawing(s) or for meeting all requirements of the contract documents. This review does not mean that Stantec approves the detailed design inherent in the shop drawing, responsibility for which shall remain with the Contractor submitting same, nor does this review mean that Stantec accepts any deviation of the shop drawing(s) from the contract documents. The Contractor is responsible for confirming all dimensions and correlating them at the job site, for all construction means, methods and techniques, and for coordination of construction work of all trades, including coordination of all shop drawings.

SUBMITTAL # DA-MP-33R2/Piping Support Primery

Stantec

☑ REVIEWED
☐ REVIEWED, AS NOTED
☐ REVISE AND RESUBMIT
☐ NOT REVIEWED

DATE 2019-03-07

BY Petr Polivka

1100, montée Masson
Laval, QC, Canada
H7E 4P2

Phone. : 450-688-4012
Fax : 450-661-6341
E-Mail : info@norclair.ca
www.norclair.ca

CUSTOMER : **IQALUIT WASTE WATER TREATMENT PLANT UPGRADE**

MANUFACTURER : **NORCLAIR**

DESCRIPTION : **PIPING SUPPORTS**

JOB # : **P1039**

CALCULATION # : **PC-1820**

DRAWING : **P505**

CODE : **NBCC 2015**
ASME B31.3 2014 ed
MSS SP-58 2009 ed



Rev	Date	Description	Prep. by	Appr. by
0	2018 Nov 20	For approval	S. Cloutier	

EXPLICATIVE NOTES

In the following work we will verify the mechanical resistance of seven supports.

The calculation doesn't take notice of the pressure, the vibration, the forces produced by pump startup or hydraulic rams. Thermal expansion has been considering negligible.

The mechanical resistance of the concrete used for anchorage is of 3000 Psi (20 Mpa) without crack. It is imperative that the type of anchorage and the quality of concrete used are verified and approved by a civil engineer.

PIPING SUPPORTS

Sheet :	of
By :	
Date :	2018 Nov 20
PC-1820	Rev:

SEISMIC LOADS

(FOR PIPING)

AS PER NBCC 2015

IQUALUIT NUNAVUT

$S_a(0.2) = 0.087$

$S_a(0.5) = 0.065$

$S_a(1.0) = 0.043$

$S_a(2.0) = 0.023$

$F_a = 1.24$

$I_E = 1.5$

$C_p = 1$

$A_r = 1$

$R_p = 3$

$A_x = 3$

$$V_p = 0.3\, F_a \cdot S_a(0.2)\, I_E \cdot S_p \cdot W_p$$

$$A_x = 1 + 2\frac{h_x}{h_n} = 1 + 2 \times 1 = 3$$

$$S_p = \frac{C_p \cdot A_r \cdot A_x}{R_p}$$

$$S_p = \frac{1 \times 1 \times 3}{3} = 1$$

$$V_p = 0.3 \times F_a \cdot S_a(0.2) \cdot I_E \cdot S_p \cdot W_p$$

$$= 0.3 \times 1.24 \times 0.087 \times 1.5 \times 1 \times W_p$$

$$V_p = 0.05\ W_p$$

PIPING SUPPORTS

Sheet :	of
By :	
Date :	2018 Nov 20
PC-1820	Rev:

WEIGHT LINEAR PIPING

FULL OF WATER

PIPE 6" ø sch 10S = 23 Lbs/ft

8" ø sch 10S = 38 Lbs/ft

10" ø sch 10S = 59 Lbs/ft

14" ø sch 10S = 95 Lbs/ft

16" ø sch 10S = 128 Lbs/ft

VENT → 16" ø x 1/4" WALL = 42 Lbs/ft

PIPING SUPPORTS

Sheet :	of
By :	
Date :	2018 Nov 20
PC-1820	Rev:

FLANGE WEIGHT

2 FLANGE with bolts and NUT

FLANGE	6" ø =	48 Lbs
	8" ø =	68 Lbs
	10" ø =	100 Lbs
	14" ø =	200 Lbs
	16" ø =	260 Lbs

PIPING SUPPORTS

Sheet :	of
By :	
Date :	2018 Nov 20
PC-1820	Rev:

VALVE WEIGHT

PLUG VALVE	PLV	8"ø	=	185 Lbs
KNIF VALVE	KV	10"ø	=	100 Lbs
KNIF VALVE	KV	14"ø	=	220 Lbs
KNIF VALVE	KV	16"ø	=	275 Lbs
Flow VALVE	FV	14"ø	=	368

Check VALVE WEIGHT

check VALVE	CV	8"ø	=	375 Lbs

FLOW INDICATOR

FE 8"ø = 100 Lbs

PIPING SUPPORTS

Sheet :	of
By :	
Date :	2018 Nov 20
PC-1820	Rev:

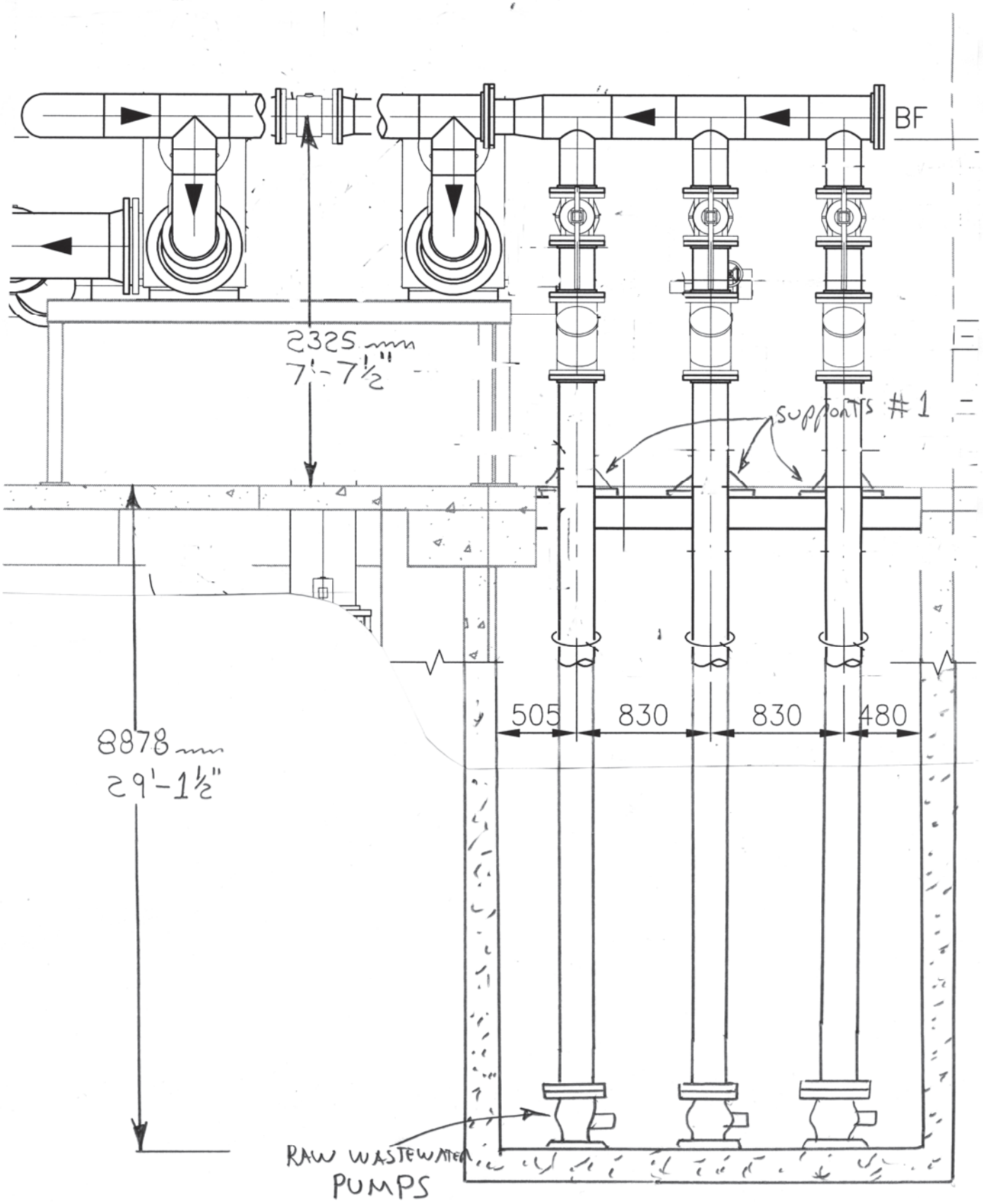

PIPING SUPPORTS

Sheet :	of
By :	
Date :	2018 Nov 20
PC-1820	Rev:

SUPPORT # 1

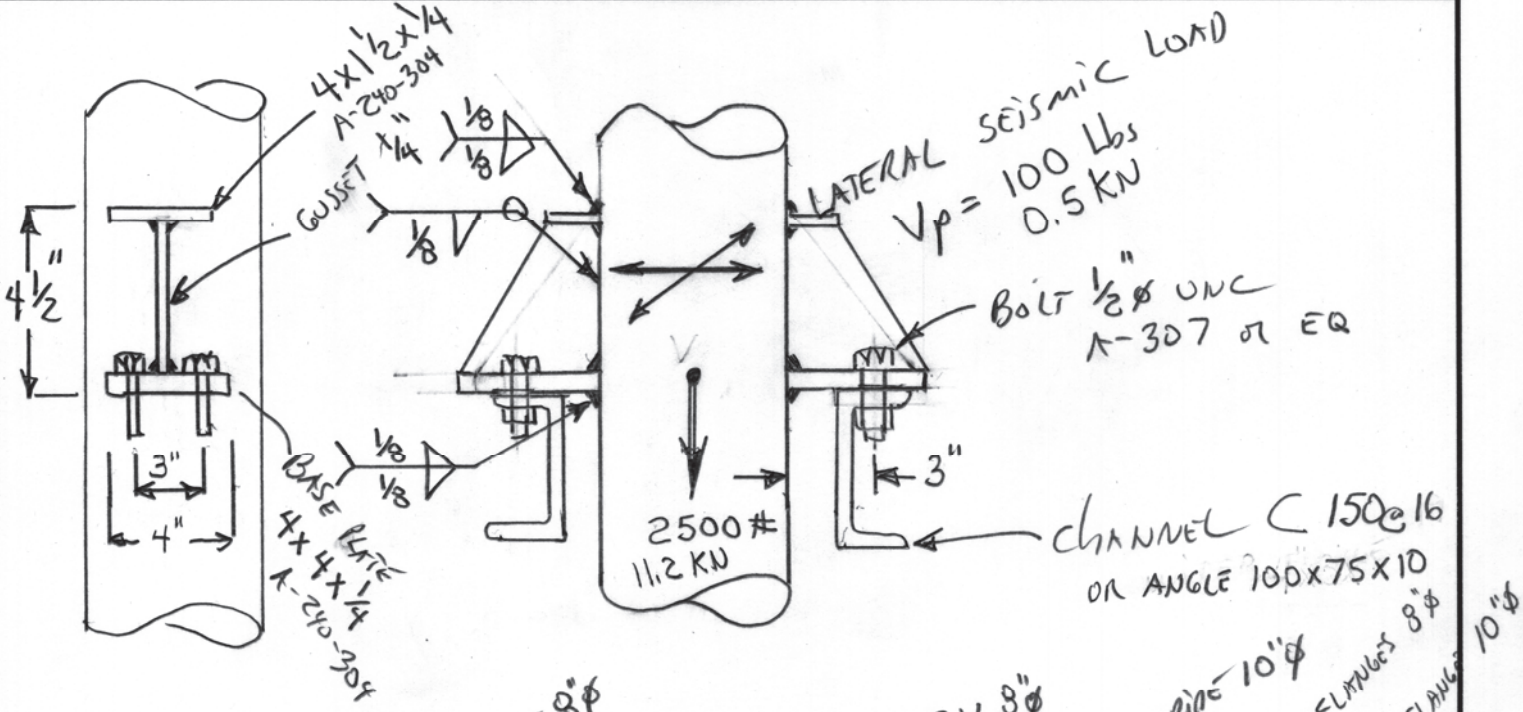

$$W = (37' \times 38\ Lbs/ft) + 185\ Lbs + 375\ Lbs + (3' \times 59\ Lbs/ft) + 170\ Lbs + 100$$

(PIPE 8"ø; PLV 8"ø; CV 8"ø; PIPE 10"ø; FLANGES 8"ø; FLANGES 10"ø)

$$= 2413\ Lbs \quad \text{USE} \quad 2500\#$$

$$V_p = 0.04 \times W$$

$$= 0.04 \times 2500\ Lbs = 100\ Lbs$$

PIPING SUPPORTS

Sheet :	of
By :	
Date :	2018 Nov 20
PC-1820	Rev:

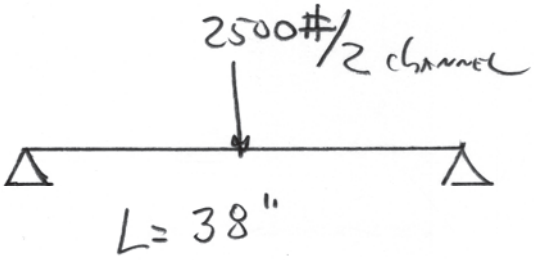

$$M = \frac{PL}{4} = \frac{2500/2 \times 38"}{4} = 11\,875 \text{ Lbs·in}$$

$$S = \frac{M}{\sigma_a} = \frac{11\,875 \text{ Lbs in}}{26\,400} = 0.45 \text{ in}^3$$

A-36 or Eq

ok C 6" @ 10.5#/ft

C150 @ 13 kg/m

OR

ANGLE 100 x 75 x 10

4" x 3" x 3/8

Support Lugs

Inputs	
Support material	A-240-304
This support is attached to	PIPE 8" SCH 10S
Distance from baseplate to datum	18"
Lug allowable stress, S_b	20 000 psi
Shell to center of load bearing area, d	3"
Lug length, circumferential direction, L	4"
Lug attachment fillet weld size	0.1875"
Radial/bending lug stiffness ratio	2
Number of support lugs	2
Local Shell	
Outer Diameter	8.625"
Thickness	0.148"
Inner Corrosion	0"
Outer Corrosion	0"
Top Plate	
Width, W_p	1.5"
Thickness, t_a	0.25"
Base Plate	
Width, b	4"
Thickness, t_b	0.25"
Load Bearing Width, L_b	3"
Gusset	
Height, h	4"
Thickness, t_g	0.125"
Separation, L_g	0.0625"
Anchor Bolts	
Anchor bolt size	0.375" coarse threaded
Anchor bolt material	
Bolt circle, BC	14"
Anchor bolts/lug, n	1
Anchor bolt allowable stress, S_b	20 000 psi
Anchor bolt corrosion allowance	0"
Anchor bolt hole clearance	0.375"

Stresses in Shell at Lug Supports													
Condition	Total Weight (lb)	Shear V (lb_f)	Moment M (lb_f-ft)	Lug orient	Lug Loading						Stress in Shell (psi)		
					W (lb)	P_r (lb_f)	V_L (lb_f)	M_L (lb_f-ft)	V_c (lb_f)	M_c (lb_f-ft)	Primary Circ (P_L)	Primary Long (P_L)	Combined P_L+P_b+Q
Weight, operating Attack angle = 0°	2 546	0	0	0°	1 273	0	1 273	318.23	0	0.00	5 630	3 766	14 226
				180°	1 273	0	1 273	318.23	0	0.00	5 630	3 766	14 226
Weight, operating Attack angle = 90°	2 546	0	0	0°	1 273	0	1 273	318.23	0	0.00	5 630	3 766	14 226
				180°	1 273	0	1 273	318.23	0	0.00	5 630	3 766	14 226
Weight, operating, new Attack angle = 0°	2 546	0	0	0°	1 273	0	1 273	318.23	0	0.00	5 630	3 766	14 226
				180°	1 273	0	1 273	318.23	0	0.00	5 630	3 766	14 226
Weight, operating, new Attack angle = 90°	2 546	0	0	0°	1 273	0	1 273	318.23	0	0.00	5 630	3 766	14 226
				180°	1 273	0	1 273	318.23	0	0.00	5 630	3 766	14 226
Weight, empty, new Attack angle = 0°	46	0	0	0°	23	0	23	5.73	0	0.00	-67	-50	-238
				180°	23	0	23	5.73	0	0.00	-67	-50	-238
Weight, empty, new Attack angle = 90°	46	0	0	0°	23	0	23	5.73	0	0.00	-67	-50	-238
				180°	23	0	23	5.73	0	0.00	-67	-50	-238
Seismic, operating, new Attack angle = 0°	2 546	82	5	0°	1 273	-41	1 264	316.05	0	0.00	5 794	3 814	14 469
				180°	1 527	41	1 536	384.05	0	0.00	6 207	4 277	16 634
Seismic, operating, new Attack angle = 90°	2 546	82	5	0°	1 527	0	1 527	381.87	-41	-10.30	6 371	4 326	16 879
				180°	1 527	0	1 527	381.87	41	10.30	6 371	4 326	16 878

Applied Loads (Seismic, operating, new, Attack angle = 90°, lug orientation = 0°)	
Radial load, P_r	0 lb_f
Circumferential moment, M_c	-123.6 lb_f-in
Circumferential shear, V_c	-41.2 lb_f
Longitudinal moment, M_L	4 582.5 lb_f-in
Longitudinal shear, V_L	1 527.49 lb_f
Torsion moment, M_t	31.8 lb_f-in
Internal pressure, P	60 psi
Mean shell radius, R_m	4.2293"
Local shell thickness, T	0.1295"
Design factor	3

Maximum stresses due to the applied loads at the lug edge (includes pressure)

$\gamma = R_m / T = 4.2293 / 0.1295 = 32.6583$

$C_1 = 2$, $C_2 = 2.25$ in

Local circumferential pressure stress = $P*R_i / T$ =1 929 psi

Local longitudinal pressure stress = $P*R_i / (2*T)$ =964 psi

Maximum combined stress (P_L+P_b+Q) = 16 879 psi
Allowable combined stress (P_L+P_b+Q) = ±3*S = ±51 000 psi

The maximum combined stress (P_L+P_b+Q) is within allowable limits.

Maximum local primary membrane stress (P_L) = 6 371 psi
Allowable local primary membrane stress (P_L) = ±1.5*S = ±25 500 psi

The maximum local primary membrane stress (P_L) is within allowable limits.

Stresses at the lug edge per WRC Bulletin 537										
Figure	**Y**	**β**	**A_u**	**A_l**	**B_u**	**B_l**	**C_u**	**C_l**	**D_u**	**D_l**
3C*	0.908	0.5373	0	0	0	0	0	0	0	0
4C*	2.5062	0.5164	0	0	0	0	0	0	0	0
1C	0.0518	0.4927	0	0	0	0	0	0	0	0
2C-1	0.0079	0.4927	0	0	0	0	0	0	0	0
3A*	0.8014	0.4918	0	0	0	0	88	88	-88	-88
1A	0.0606	0.5527	0	0	0	0	1 147	-1 147	-1 147	1 147
3B*	1.2968	0.5115	-4 442	-4 442	4 442	4 442	0	0	0	0
1B-1	0.009	0.5093	-6 851	6 851	6 851	-6 851	0	0	0	0
Pressure stress*			1 929	1 929	1 929	1 929	1 929	1 929	1 929	1 929
Total circumferential stress			-9 364	4 338	13 222	-480	3 164	870	694	2 988
Primary membrane circumferential stress*			-2 513	-2 513	6 371	6 371	2 017	2 017	1 841	1 841
3C*	0.908	0.5164	0	0	0	0	0	0	0	0
4C*	2.5062	0.5373	0	0	0	0	0	0	0	0
1C-1	0.0181	0.5202	0	0	0	0	0	0	0	0
2C	0.03	0.5202	0	0	0	0	0	0	0	0
4A*	3.3557	0.4918	0	0	0	0	359	359	-359	-359
2A	0.0256	0.5877	0	0	0	0	455	-455	-455	455
4B*	0.856	0.5115	-3 362	-3 362	3 362	3 362	0	0	0	0
2B-1	0.0179	0.5521	-12 552	12 552	12 552	-12 552	0	0	0	0
Pressure stress*			964	964	964	964	964	964	964	964
Total longitudinal stress			-14 950	10 154	16 878	-8 226	1 778	868	150	1 060
Primary membrane longitudinal stress*			-2 398	-2 398	4 326	4 326	1 323	1 323	605	605
Shear from M_t			6	6	6	6	6	6	6	6
Circ shear from V_c			-40	-40	40	40	0	0	0	0
Long shear from V_L			0	0	0	0	-1 311	-1 311	1 311	1 311
Total Shear stress			-34	-34	46	46	-1 305	-1 305	1 317	1 317
Combined stress (P_L+P_b+Q)			-14 950	10 154	16 879	-8 226	3 949	2 610	2 690	3 656

* denotes primary stress.
WRC 537 does not consider torsional moments for rectangular attachments.
As such, Shear from Mt is calculated based on Blodgett p. 7.4-6, Table 5.

Lug top plate required thickness, Bednar 5.2

$t_a = 0.75*(V_L*d*L)/(S_b*W_p^2*h)$
$= 0.75*(1\ 536.2*3*4)/(20\ 000*1.5^2*4)$
$= 0.0768$ in

To prevent buckling $t_{a(min)}$ = (Top plate width)/12 =0.125 in.

The top plate thickness of 0.25 in is adequate.

Gusset plate required thickness, Bednar 5.2

$S_c = 15\ 000 / (1 + (1/15\ 000)*(h/(0.289*t_g))^2)$
$= 15\ 000 / (1 + (1/15\ 000)*(4/(0.289*0.125))^2)$
$= 8\ 254$ psi

$t_g = V_L*(3*d - b)/(S_c*b^2*(Sin(\alpha))^2)$
$= 1\ 536.2*(3*3 - 4)/(8\ 254*4^2*(Sin(57.995))^2)$
$= 0.0809$ in

The gusset thickness of 0.125 in is adequate.

Lug base plate required thickness

From Escoe table 4-8 (l/b = 64)

$C_x = 0.133$, $C_y = -0.125$

$f_c = V_L/(L_b*L)$
$= 1\ 536.2/(3*4)$
$= 128$ psi

$M_x = C_x*f_c*L_g^2$
$= 0.133*128*0.0625^2$
$= 0.07$ in-lb$_f$/in

$M_y = C_y*f_c*L_b^2$
$= -0.125*128*3^2$
$= -144.02$ in-lb$_f$/in

$M = Max[Abs(M_x), Abs(M_y)]$
$= Max[Abs(0.07), Abs(-144.02)]$
$= 144.02$ in-lb$_f$/in

Check the governing bolt reaction due to torsion on the support lug:

$F_b = M_t/L - W/2$
$= 0/4 - 0/2$
$= 0$ lb$_f$

$M_x = F_b*L / 4 / b$
$= 0*4 / 4 / 4$
$= 0$ in-lb$_f$/in

$t_b = Sqr(6*M / S_b)$
$= Sqr(6*144 / 20\ 000)$
$= 0.2079$ in

The base plate thickness of 0.25 in is adequate.

Support Lug to Shell Fillet Weld Sizing - Bednar chapters 5.2 and 10.3

Note: continuous welding is assumed for all support lug fillet welds.

$d_h = t_a + h + t_b$

$L_w = 2*(b + d_h) = 2*(4 + 4.5) = 17$ in
$Z_w = b*d_h + d_h^2/3 = 4*4.5 + 4.5^2/3 = 24.75$ in^2
$Z_z = d_h*b + b^2/3 = 4.5*4 + 4^2/3 = 23.33$ in^2

Shear $f_1 = V_L/L_w = 1\ 536.2/17 = 90$ lb$_f$/in
Shear $f_2 = V_c/L_w = 0/17 = 0$ lb$_f$/in
Bending f_3 = larger absolute value of M_L/Z_w or M_c/Z_z
$= M_L/Z_w$
$= 4\ 608.6/24.75$
$= 186.21$ lb$_f$/in

Resultant load $f = (f_1^2 + f_2^2 + f_3^2)^{1/2}$

$= (90.36^2 + 0^2 + 186.21^2)^{1/2}$
$= 206.97$ lb$_f$/in

Required weld size $w = F/(0.707*0.55*S_a)$

$= 206.97/(0.707*0.55*17\ 000)$
$= 0.0313$ in

The support lug fillet weld size of 0.1875 in is adequate.

Anchor bolts - Weight empty new condition governs

Tensile loading per lug (1 bolt per lug)

R = 48*M / (N*BC) - W / N
= 48*0 / (2*14) - 45.82 / 2
= -22.91 lb$_f$
There is no net uplift (R is negative).

0.375" coarse threaded bolts are satisfactory.

PIPING SUPPORTS

Sheet :	of
By :	
Date :	2018 Nov 20
PC-1820	Rev:

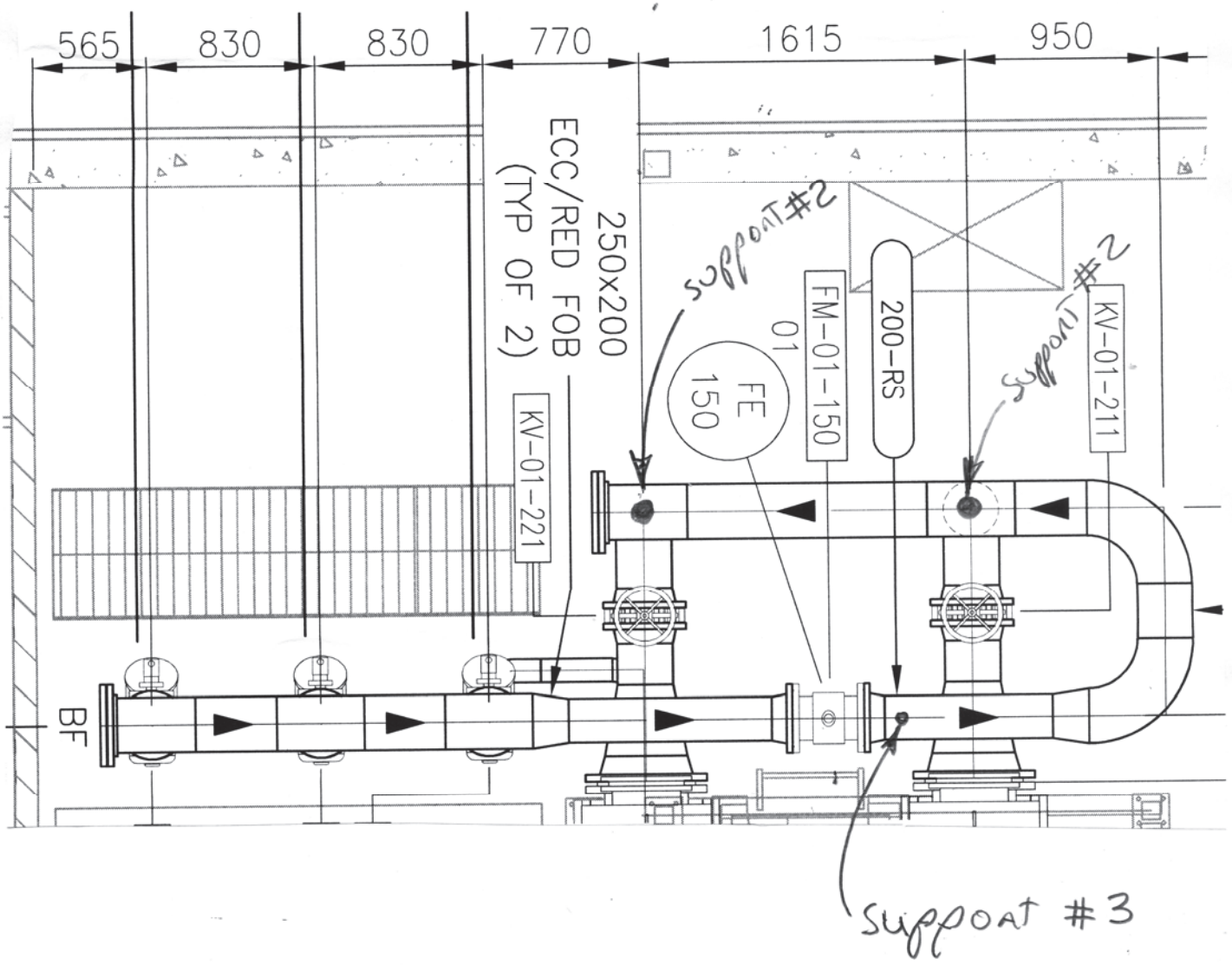

PIPING SUPPORTS

Sheet :	of
By :	
Date :	2018 Nov 20
PC-1820	Rev:

support #2

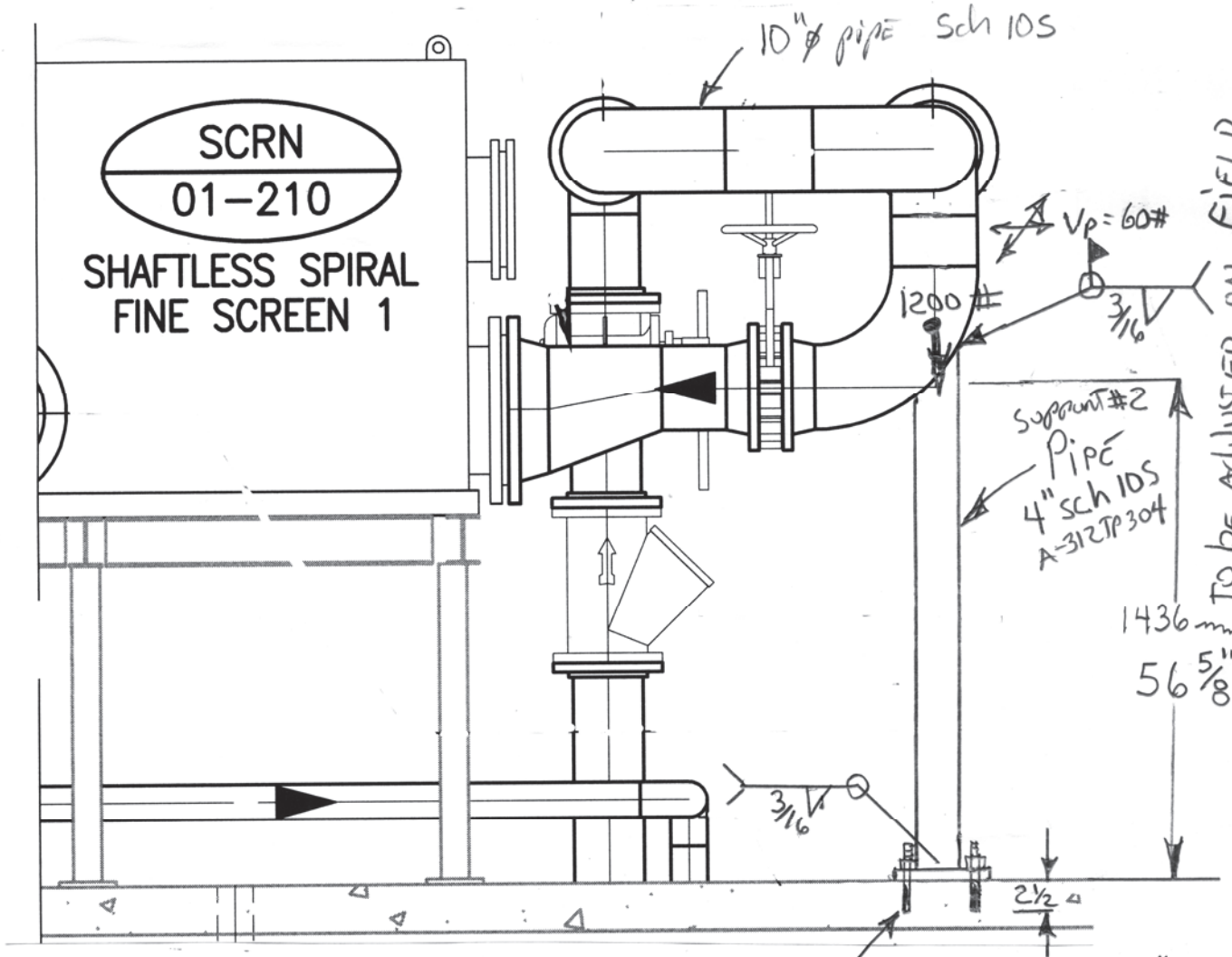

pipe 10"ϕ sch 10S ← VALVE KV 10"ϕ ← FLANGE

$W_2 = (15.5\ ft \times 59\#/ft) + 100\# + 100\ Lbs = 1115\ Lbs$

USE 1200#

$V_{2p} = 0.05\ W$

$= 0.05 \times 1200\# = 60\ Lbs$

PIPING SUPPORTS

Sheet :	of
By :	
Date :	2018 Nov 20
PC-1820	Rev:

support #2

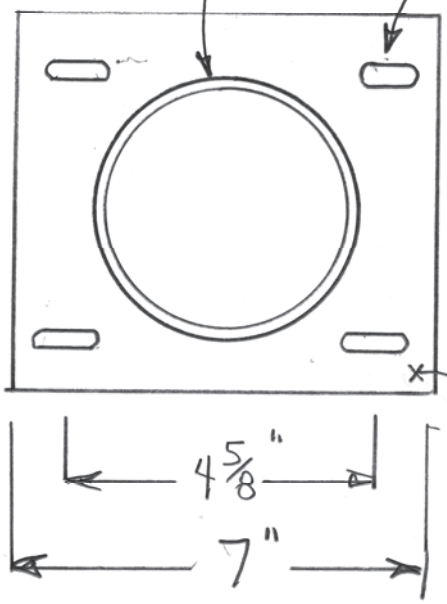

PROVID ALLOWABLE MOVEMENT FOR VALVE MAINTENANCE

(GASKET REMOVE)

KNIF VALVE KV 10"ϕ

PLATE 1/4" THK
A-240-304

Pipe 4" SCH 10S

ASME Section VIII Division 1, 2013 Edition				
Component		Support Skirt		
Skirt is Attached To		13.2		
Skirt Attachment Offset		0" up from the bottom seam		
Material		SA-312 TP304 Wld & smls pipe (II-D p. 94, ln. 19)		
		Impact Tested[1]	**Normalized**	**Fine Grain Practice**
		No	No	No
Design Temperature				
Internal		100°F		
Dimensions				
Inner Diameter	**Top**	4.26"		
	Botttom	4.26"		
Length (includes base ring thickness)		36"		
Nominal Thickness		0.12"		
Corrosion	**Inner**	0"		
	Outer	0"		
Weight				
New		17.12 lb		
Corroded		17.12 lb		
Joint Efficiency				
Top		0.55		
Bottom		0.8		

[1] Impact testing requirements are not checked for supports

Skirt design thickness, largest of the following + corrosion = 0.0192 in

The governing condition is due to seismic, compressive stress at the base, operating & corroded.

The skirt thickness of 0.105 in is adequate.

Results Summary							
Loading	**Condition**	**Tensile or Compressive Side**	**Governing Skirt Location**	**Temperature (°F)**	**Allowable Stress (psi)**	**Calculated Stress/E (psi)**	**Required thickness (in)**
Weight	operating, corroded	Tensile	bottom	100	13 307.43	-746.88	0.0067
		Compressive				746.88	0.0067
	empty, corroded	Tensile	bottom	70	13 307.43	-20.14	0.0002
		Compressive				20.14	0.0002
Seismic	operating, corroded	Tensile	bottom	100	20 000	600.89	0.0036
		Compressive			13 307.43	2 123.84	0.0192
	empty, corroded	Tensile	top	70	13 307.43	-8.43	0.000076
		Compressive	bottom			44.93	0.0004

Loading due to seismic, operating & corroded

Tensile side

Required thickness, tensile stress at base:

$t = -W / (\pi*D*S_t*E) + 48*M / (\pi*D^2*S_t*E)$
$= -1\ 233.26 / (\pi*4.38*20\ 000*0.8) + 48*185 / (\pi*4.38^2*20\ 000*0.8)$
$= 0.0036$ in

Required thickness, tensile stress at the top:

$t = -W_t / (\pi*D_t*S_t*E) + 48*M_t / (\pi*D_t^2*S_t*E)$
$= -1\ 216.14 / (\pi*4.38*13\ 307*1) + 48*65.3 / (\pi*4.38^2*13\ 307*1)$
$= 0.0027$ in

Compressive side

Required thickness, compressive stress at base:

$t = (1 + VAccel)*W / (\pi*D*S_c*E_c) + 48*M / (\pi*D^2*S_c*E_c)$
$= (1 + 0.2)*1\ 233.26 / (\pi*4.38*13\ 307*1) + 48*185 / (\pi*4.38^2*13\ 307*1)$
$= 0.0192$ in

Required thickness, compressive stress at the top:

$t = (1 + VAccel)*W_t / (\pi*D_t*S_c*E_c) + 48*M_t / (\pi*D_t^2*S_c*E_c)$
$= (1 + 0.2)*1\ 216.14 / (\pi*4.38*13\ 307*1) + 48*65.3 / (\pi*4.38^2*13\ 307*1)$
$= 0.0119$ in

Base Plate 7 x 7 x 1/4"

Inputs	
Base configuration	single base plate without gussets
Base plate material	A-240-304
Base plate allowable stress, S_p	20 000 psi
Foundation compressive strength	1 658 psi
Concrete ultimate 28-day strength	3 000 psi
Bolt circle, BC	6.5"
Base plate inner diameter, D_i	2"
Base plate outer diameter, D_o	7"
Base plate thickness, t_b	0.25"
Anchor Bolts	
Material	A-307 gr B
Allowable stress, S_b	15 000 psi
Bolt size and type	0.375" coarse threaded
Number of bolts, N	4
Corrosion allowance (applied to root radius)	0"
Anchor bolt clearance	0.125"
Bolt root area (corroded), A_b	0.07 in^2
Diameter of anchor bolt holes, d_b	0.5"
Initial bolt preload	100% (15 000 psi)
Bolt at 0°	No

Results Summary							
Load	Vessel condition	Base V (lb_f)	Base M (lb_f-ft)	W (lb)	Required bolt area (in^2)	t_r Base (in)	Foundation bearing stress (psi)
Weight	operating, corroded	0	0	1 235.3	0	0.1897	153.46
Weight	operating, new	0	0	1 235.3	0	0.1897	153.46
Weight	empty, corroded	0	0	35.3	0	0.1668	118.74
Weight	empty, new	0	0	35.3	0	0.1668	118.74
Seismic	operating, corroded	40	185	1 235.3	0.0022	0.2306	226.97
Seismic	operating, new	40	185	1 235.3	0.0022	0.2306	226.97
Seismic	empty, corroded	1.1	3.1	35.3	0	0.1677	120.06
Seismic	empty, new	1.1	3.1	35.3	0	0.1677	120.06

Anchor bolt load (governing)

$P = -W / N + 48 * M / (N*BC)$
$= -1\,235.26 / 4 + 48 * 185 / (4*6.5)$
$= 32.66\ lb_f$

Required area per bolt = P / S_b = 0.0022 in^2

The area provided (0.0678 in^2) by the specified anchor bolt is adequate.

Foundation bearing stress (governing)

$A_c = \pi*(D_o^2 - D_i^2) / 4 - N*\pi*d_b^2 / 4$
$= \pi*(7^2 - 2^2) / 4 - 4*\pi*0.5^2 / 4$
$= 34.5575\ in^2$

$I_c = \pi*(D_o^4 - D_i^4) / 64$
$= \pi*(7^4 - 2^4) / 64$
$= 117.0734\ in^4$

$f_c = N*A_b*Preload / A_c + (1 + VAccel)*W / A_c + 6*M*D_o / I_c$
$= 4*0.0678*15\,000 / 34.5575 + (1 + 0.2)*1\,235.26 / 34.5575 + 6*185*7 / 117.0734$
= 227 psi

As f_c <= 1 658 psi the base plate width is satisfactory.

Base plate required thickness (governing)

$t_r = (3*f_c*L^2 / S_p)^{0.5}$
$= (3*227*1.25^2 / 20\,000)^{0.5}$
= 0.2306 in

The base plate thickness is satisfactory.

WRC 107 Load case 1

Applied Loads	
Radial load, P_r	1 200 lb_f
Circumferential moment, M_1	5 000 lb_f-in
Circumferential shear, V_2	0 lb_f
Longitudinal moment, M_2	5 000 lb_f-in
Longitudinal shear, V_1	0 lb_f
Torsion moment, M_t	0 lb_f-in
Internal pressure, P	75 psi
Mean dish radius, R_m	20.428"
Local head thickness, T	0.144"
Design factor	3

Maximum stresses due to the applied loads at the nozzle OD (includes pressure)

$U = r_o / Sqr(R_m*T) = 2.25 / Sqr(20.428*0.144) = 1.312$

Pressure stress intensity factor, I = 2.9443 (derived from Division 2 Part 4.5)

Local pressure stress = $I*P*R_i / (2*T)$ =15 608 psi

Maximum combined stress (P_L+P_b+Q) = 48 742 psi
Allowable combined stress (P_L+P_b+Q) = ±3*S = ±60 000 psi

The maximum combined stress (P_L+P_b+Q) is within allowable limits.

Maximum local primary membrane stress (P_L) = 20 056 psi
Allowable local primary membrane stress (P_L) = ±1.5*S = ±30 000 psi

The maximum local primary membrane stress (P_L) is within allowable limits.

Stresses at the nozzle OD per WRC Bulletin 107										
Figure	**value**		**A_u**	**A_l**	**B_u**	**B_l**	**C_u**	**C_l**	**D_u**	**D_l**
SR-2*	N_x*T / P	0.0468	-2 708	-2 708	-2 708	-2 708	-2 708	-2 708	-2 708	-2 708
SR-2	M_x / P	0.0235	-8 160	8 160	-8 160	8 160	-8 160	8 160	-8 160	8 160
SR-3*	N_x*T*(R_m*T)$^{0.5}$ / M_1	0.0509	0	0	0	0	-7 156	-7 156	7 156	7 156
SR-3	M_x*(R_m*T)$^{0.5}$ / M_1	0.0413	0	0	0	0	-34 838	34 838	34 838	-34 838
SR-3*	N_x*T*(R_m*T)$^{0.5}$ / M_2	0.0509	-7 156	-7 156	7 156	7 156	0	0	0	0
SR-3	M_x*(R_m*T)$^{0.5}$ / M_2	0.0413	-34 838	34 838	34 838	-34 838	0	0	0	0
Pressure stress*			15 608	15 608	15 608	15 608	15 608	15 608	15 608	15 608
Total O_x stress			-37 254	48 742	46 734	-6 622	-37 254	48 742	46 734	-6 622
Membrane O_x stress*			5 744	5 744	20 056	20 056	5 744	5 744	20 056	20 056
SR-2*	N_y*T / P	0.0143	-828	-828	-828	-828	-828	-828	-828	-828
SR-2	M_y / P	0.0071	-2 465	2 465	-2 465	2 465	-2 465	2 465	-2 465	2 465
SR-3*	N_y*T*(R_m*T)$^{0.5}$ / M_1	0.0154	0	0	0	0	-2 165	-2 165	2 165	2 165
SR-3	M_y*(R_m*T)$^{0.5}$ / M_1	0.0125	0	0	0	0	-10 544	10 544	10 544	-10 544
SR-3*	N_y*T*(R_m*T)$^{0.5}$ / M_2	0.0154	-2 165	-2 165	2 165	2 165	0	0	0	0
SR-3	M_y*(R_m*T)$^{0.5}$ / M_2	0.0125	-10 544	10 544	10 544	-10 544	0	0	0	0
Pressure stress*			15 608	15 608	15 608	15 608	15 608	15 608	15 608	15 608
Total O_y stress			-394	25 624	25 024	8 866	-394	25 624	25 024	8 866
Membrane O_y stress*			12 615	12 615	16 945	16 945	12 615	12 615	16 945	16 945
Shear from M_t			0	0	0	0	0	0	0	0
Shear from V_1			0	0	0	0	0	0	0	0
Shear from V_2			0	0	0	0	0	0	0	0
Total Shear stress			0	0	0	0	0	0	0	0
Combined stress (P_L+P_b+Q)			-37 254	48 742	46 734	-15 488	-37 254	48 742	46 734	-15 488

(1) * denotes primary stress.
(2) The nozzle is assumed to be a rigid (solid) attachment.

Longitudinal stress in the nozzle wall due to internal pressure + external loads

$\sigma_{n\,(Pm)}$ = P*R_i / (2*t_n) - P_r / (π*(R_o^2 - R_i^2)) + M*R_o / I
= 75*2.13 / (2*0.105) - 1 200 / (π*(2.25^2 - 2.13^2)) + 7 071.1*2.25 / 3.9627
= 4 049 psi

The average primary stress P_m (see Division 2 5.6.a.1) across the nozzle wall due to internal pressure + external loads is acceptable (• S = 17 000 psi)

WRC 107 Load case 1 (Hot Shut Down)

Applied Loads	
Radial load, P_r	1 200 lb_f
Circumferential moment, M_1	5 000 lb_f-in
Circumferential shear, V_2	0 lb_f
Longitudinal moment, M_2	5 000 lb_f-in
Longitudinal shear, V_1	0 lb_f
Torsion moment, M_t	0 lb_f-in
Internal pressure, P	0 psi
Mean dish radius, R_m	20.428"
Local head thickness, T	0.144"
Design factor	3

Maximum stresses due to the applied loads at the nozzle OD

$U = r_o / Sqr(R_m*T) = 2.25 / Sqr(20.428*0.144) = 1.312$

Pressure stress intensity factor, I = 2.9443 (derived from Division 2 Part 4.5)

Local pressure stress = $I*P*R_i / (2*T)$ =0 psi

Maximum combined stress (P_L+P_b+Q) = -52 862 psi
Allowable combined stress (P_L+P_b+Q) = ±3*S = ±60 000 psi

The maximum combined stress (P_L+P_b+Q) is within allowable limits.

Maximum local primary membrane stress (P_L) = -9 864 psi
Allowable local primary membrane stress (P_L) = ±1.5*S = ±30 000 psi

The maximum local primary membrane stress (P_L) is within allowable limits.

Stresses at the nozzle OD per WRC Bulletin 107										
Figure	**value**		**A_u**	**A_l**	**B_u**	**B_l**	**C_u**	**C_l**	**D_u**	**D_l**
SR-2*	N_x*T / P	0.0468	-2 708	-2 708	-2 708	-2 708	-2 708	-2 708	-2 708	-2 708
SR-2	M_x / P	0.0235	-8 160	8 160	-8 160	8 160	-8 160	8 160	-8 160	8 160
SR-3*	N_x*T*(R_m*T)$^{0.5}$ / M_1	0.0509	0	0	0	0	-7 156	-7 156	7 156	7 156
SR-3	M_x*(R_m*T)$^{0.5}$ / M_1	0.0413	0	0	0	0	-34 838	34 838	34 838	-34 838
SR-3*	N_x*T*(R_m*T)$^{0.5}$ / M_2	0.0509	-7 156	-7 156	7 156	7 156	0	0	0	0
SR-3	M_x*(R_m*T)$^{0.5}$ / M_2	0.0413	-34 838	34 838	34 838	-34 838	0	0	0	0
Pressure stress*			0	0	0	0	0	0	0	0
Total O_x stress			-52 862	33 134	31 126	-22 230	-52 862	33 134	31 126	-22 230
Membrane O_x stress*			-9 864	-9 864	4 448	4 448	-9 864	-9 864	4 448	4 448
SR-2*	N_y*T / P	0.0143	-828	-828	-828	-828	-828	-828	-828	-828
SR-2	M_y / P	0.0071	-2 465	2 465	-2 465	2 465	-2 465	2 465	-2 465	2 465
SR-3*	N_y*T*(R_m*T)$^{0.5}$ / M_1	0.0154	0	0	0	0	-2 165	-2 165	2 165	2 165
SR-3	M_y*(R_m*T)$^{0.5}$ / M_1	0.0125	0	0	0	0	-10 544	10 544	10 544	-10 544
SR-3*	N_y*T*(R_m*T)$^{0.5}$ / M_2	0.0154	-2 165	-2 165	2 165	2 165	0	0	0	0
SR-3	M_y*(R_m*T)$^{0.5}$ / M_2	0.0125	-10 544	10 544	10 544	-10 544	0	0	0	0
Pressure stress*			0	0	0	0	0	0	0	0
Total O_y stress			-16 002	10 016	9 416	-6 742	-16 002	10 016	9 416	-6 742
Membrane O_y stress*			-2 993	-2 993	1 337	1 337	-2 993	-2 993	1 337	1 337
Shear from M_t			0	0	0	0	0	0	0	0
Shear from V_1			0	0	0	0	0	0	0	0
Shear from V_2			0	0	0	0	0	0	0	0
Total Shear stress			0	0	0	0	0	0	0	0
Combined stress (P_L+P_b+Q)			-52 862	33 134	31 126	-22 230	-52 862	33 134	31 126	-22 230

(1) * denotes primary stress.
(2) The nozzle is assumed to be a rigid (solid) attachment.

Longitudinal stress in the nozzle wall due to hot shut down loads

$\sigma_{n\,(Pm)}$ = ABS(P_r / (π*(R_o^2 - R_i^2))) + M*R_o / I
= ABS(1 200 / (π*(2.25^2 - 2.13^2))) + 7 071.1*2.25 / 3.9627
= 4 742 psi

The average primary stress P_m (see Division 2 5.6.a.1) across the nozzle wall due to internal pressure + external loads is acceptable (• S = 17 000 psi)

PIPING SUPPORTS

Support #3

Sheet :	of
By :	
Date :	2018 Nov 20
PC-1820	Rev:

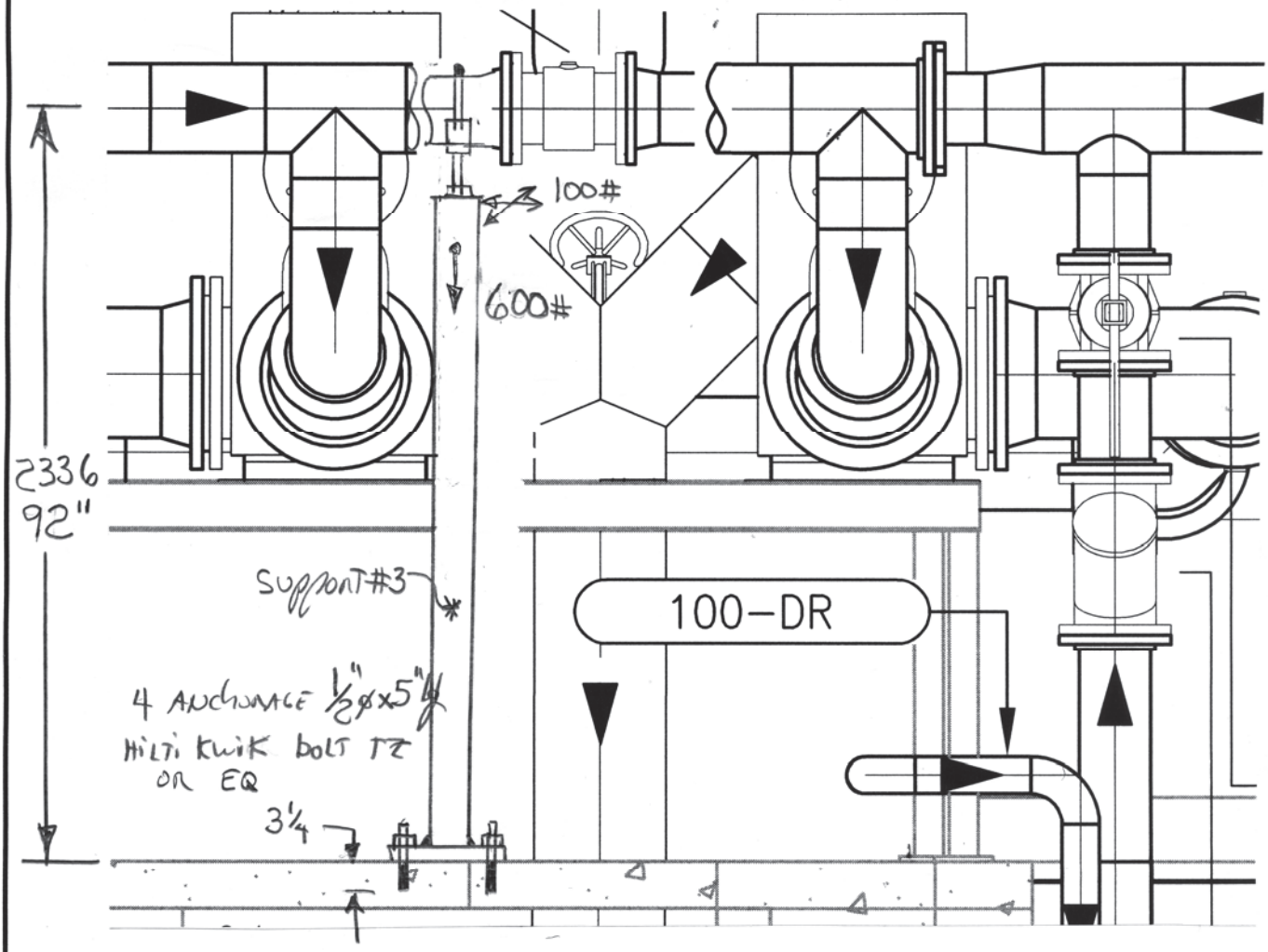

pipe 8" FE-150

$W_3 = (11\,Ft \times 38\,\#/Ft) + 100\,Lbs + 48$

$= 566\,Lbs$ use $600\,Lbs$

$V_{p3} = 0.05 \times 600 = 30\,Lbs$ use $100\,\#$

PIPING SUPPORTS

Sheet :	of
By :	
Date :	2018 Nov 20
PC-1820	Rev:

SUPPORT #3

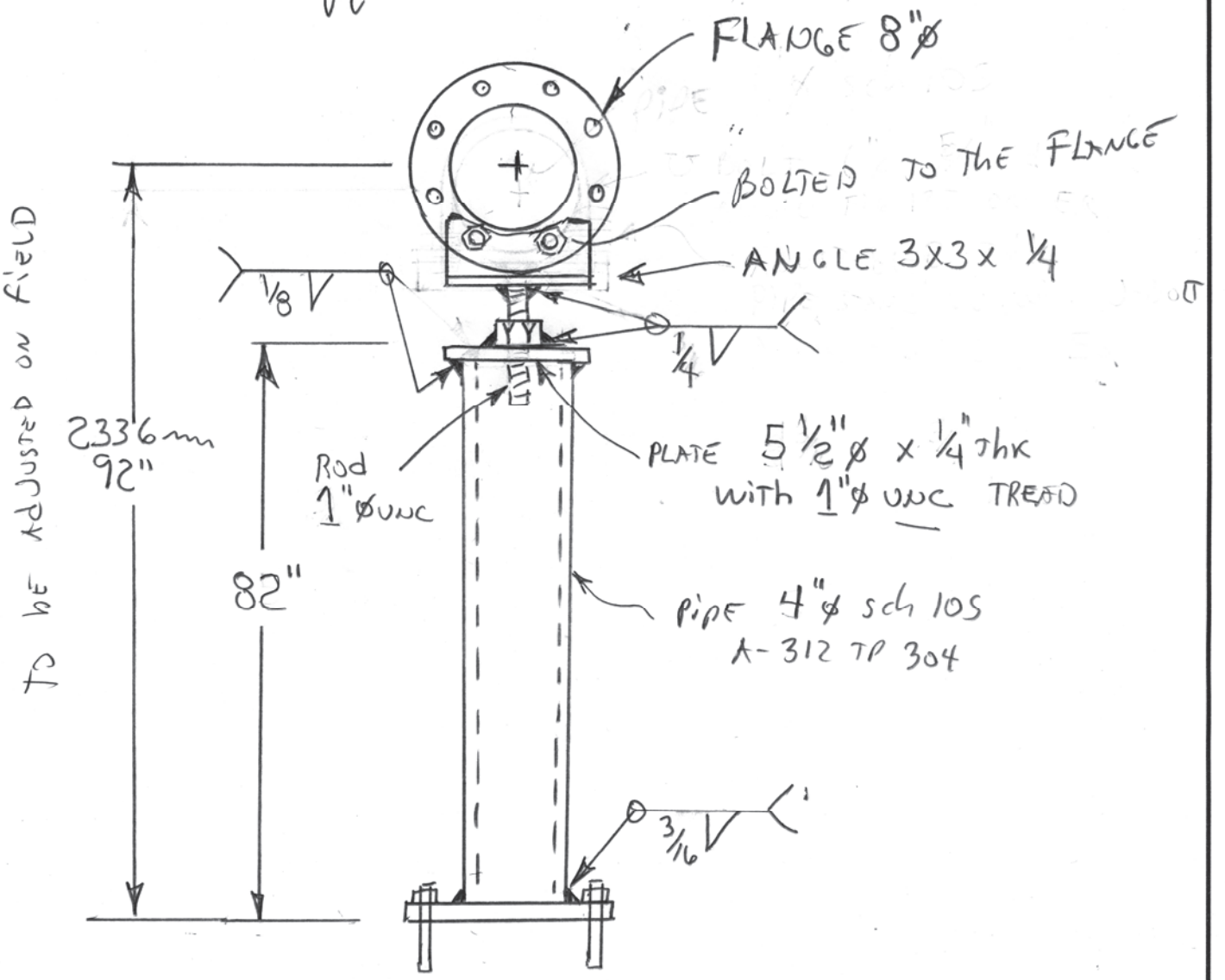

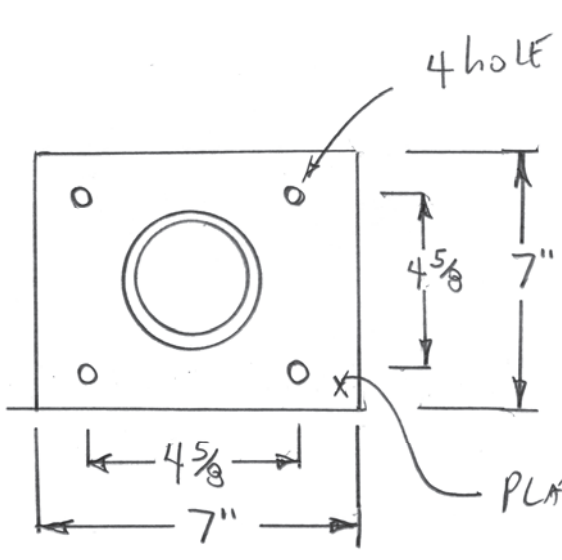

PIPING SUPPORTS

Sheet :	of
By :	
Date :	2018 Nov 20
PC-1820	Rev:

Support #3

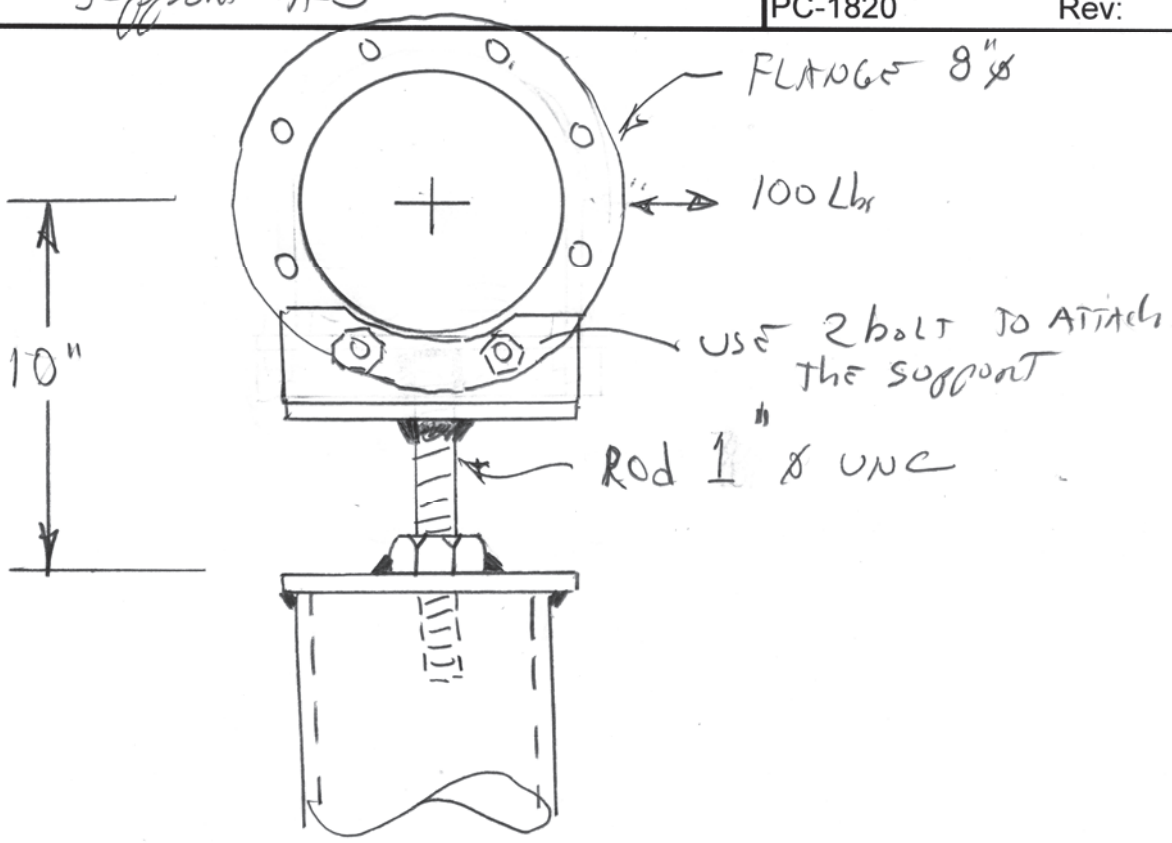

$M = PL = 100\ Lbs \times 10" = 1000\ Lbs\text{-}in$

$S = \frac{M}{\sigma_a} = \frac{1000\ Lbs\text{-}in}{20\,000\ psi} = 0.05\ in^3 < 0.062$

$S = \frac{\pi D^3}{32} = \frac{\pi \times 0.86^3}{32} = 0.062\ in^3$

OK rod 1" ø UNC

Pipe 4" SCH 10S

ASME Section VIII Division 1, 2013 Edition				
Component		Support Skirt		
Skirt is Attached To		13.2		
Skirt Attachment Offset		0" up from the bottom seam		
Material		SA-312 TP304 Wld & smls pipe (II-D p. 94, ln. 19)		
		Impact Tested[1]	**Normalized**	**Fine Grain Practice**
		No	No	No
Design Temperature				
Internal		100°F		
Dimensions				
Inner Diameter	**Top**	4.26"		
	Botttom	4.26"		
Length (includes base ring thickness)		72"		
Nominal Thickness		0.12"		
Corrosion	**Inner**	0"		
	Outer	0"		
Weight				
New		34.24 lb		
Corroded		34.24 lb		
Joint Efficiency				
Top		0.55		
Bottom		0.8		

[1] Impact testing requirements are not checked for supports

Skirt design thickness, largest of the following + corrosion = 0.0488 in

The governing condition is due to weight, compressive stress at the base, operating & corroded.

The skirt thickness of 0.105 in is adequate.

Results Summary							
Loading	**Condition**	**Tensile or Compressive Side**	**Governing Skirt Location**	**Temperature (°F)**	**Allowable Stress (psi)**	**Calculated Stress/E (psi)**	**Required thickness (in)**
Weight	operating, corroded	Tensile	bottom	100	20 000	6 014.98	0.0361
		Compressive			13 307.43	5 411.56	0.0488
	empty, corroded	Tensile	bottom	70	20 000	6 355.64	0.0381
		Compressive			13 307.43	5 139.03	0.0463

Loading due to weight, operating & corroded

Windward side (tensile)

Required thickness, tensile stress at base:

$t = -W / (\pi*D*S_t*E) + 48*M / (\pi*D^2*S_t*E)$
$= -495.01 / (\pi*4.38*20\,000*0.8) + 48*770.2 / (\pi*4.38^2*20\,000*0.8)$
$= 0.0361$ in

Required thickness, tensile stress at the top:

$t = -W_t / (\pi*D_t*S_t*E) + 48*M_t / (\pi*D_t^2*S_t*E)$
$= -460.78 / (\pi*4.38*20\,000*0.55) + 48*170.2 / (\pi*4.38^2*20\,000*0.55)$
$= 0.0093$ in

Leeward side (compressive)

Required thickness, compressive stress at base:

$t = W / (\pi*D*S_c*E_c) + 48*M / (\pi*D^2*S_c*E_c)$
$= 495.01 / (\pi*4.38*13\,307*1) + 48*770.2 / (\pi*4.38^2*13\,307*1)$
$= 0.0488$ in

Required thickness, compressive stress at the top:

$t = W_t / (\pi*D_t*S_c*E_c) + 48*M_t / (\pi*D_t^2*S_c*E_c)$
$= 460.78 / (\pi*4.38*13\,307*1) + 48*170.2 / (\pi*4.38^2*13\,307*1)$
$= 0.0127$ in

Base Plate 7 x 7 x 1/2"

Inputs	
Base configuration	single base plate without gussets
Base plate material	A-240-304
Base plate allowable stress, S_p	20 000 psi
Foundation compressive strength	1 658 psi
Concrete ultimate 28-day strength	3 000 psi
Bolt circle, BC	6.5"
Base plate inner diameter, D_i	2"
Base plate outer diameter, D_o	7"
Base plate thickness, t_b	0.5"
Anchor Bolts	
Material	A-307 gr B
Allowable stress, S_b	15 000 psi
Bolt size and type	0.5" coarse threaded
Number of bolts, N	4
Corrosion allowance (applied to root radius)	0"
Anchor bolt clearance	0.125"
Bolt root area (corroded), A_b	0.13 in^2
Diameter of anchor bolt holes, d_b	0.625"
Initial bolt preload	100% (15 000 psi)
Bolt at 0°	No

Results Summary							
Load	Vessel condition	Base V (lb_f)	Base M (lb_f-ft)	W (lb)	Required bolt area (in^2)	t_r Base (in)	Foundation bearing stress (psi)
Weight	operating, corroded	100	770.2	500	0.0865	0.48	982.92
Weight	operating, new	100	770.2	500	0.0865	0.48	982.92
Weight	empty, corroded	100	770.2	50	0.094	0.4764	968.33
Weight	empty, new	100	770.2	50	0.094	0.4764	968.33

Anchor bolt load (governing)

P = -W / N + 48 * M / (N*BC)
= -50.01 / 4 + 48 * 770.2 / (4*6.5)
= 1 409.42 lb_f

Required area per bolt = P / S_b = 0.094 in^2

The area provided (0.126 in^2) by the specified anchor bolt is adequate.

Support calculations (Jawad & Farr chapter 12, governing)

Base plate width, t_c:	2.5	in
Average base plate diameter, d:	4.5	in
Base plate elastic modulus, E_s:	28.0E+06	psi
Base plate yield stress, S_y:	30 000	psi

E_c = 57 000*Sqr(3 000) = 3 122 019 psi

n = E_s/E_c = 28.0E+06 / 3 122 019 = 8.9686

t_s = (N*A_b) / (π*d)
= (4*0.126) / (π*4.5)
= 0.0357 in

From table 12.4 for k = 0.370155:

K_1 = 2.2894, K_2 = 1.691
L_1 = 0.5847, L_2 = 2.2109, L_3 = 1.3156

Total tensile force on bolting

T = (12*M - W *(L_1 + L_3)) / (L_2 + L_3)
= (12*770.2 - 500.01 *(0.5847 + 1.3156)) / (2.2109 + 1.3156)
= 2 351.51 lb_f

Tensile stress in bolts use the larger of f_s or bolt preload = 15 000 psi

f_s = T / (t_s * (d / 2) * K_1)
= 2 351.51 / (0.0357 * (4.5 / 2) * 2.2894)
= 12 805 psi

Total compressive load on foundation

C_c = T + W + Bolt Preload
= 2 351.51 + 500.01 + 7 560
= 10 411.52 lb_f

Foundation bearing stress

$f_c = C_c / (((t_c - t_s) + n*t_s)*(d / 2)*K_2)$
= 10 411.52 / (((2.5 - 0.0357) + 8.9686*0.0357)*(4.5 / 2)*1.691)
= 983 psi

As f_c <= 1 658 psi the base plate width is satisfactory.

$k = 1 / (1 + f_s / (n*f_c))$
= 1 / (1 + 15 000 / (8.9686*983))
= 0.370155

Base plate required thickness (governing)

$t_r = (3*f_c*L^2 / S_p)^{0.5}$
= $(3*983*1.25^2 / 20\ 000)^{0.5}$
= 0.48 in

The base plate thickness is satisfactory.

PIPING SUPPORTS

Support 4 & 5

Sheet :	of
By :	
Date :	2018 Nov 20
PC-1820	Rev:

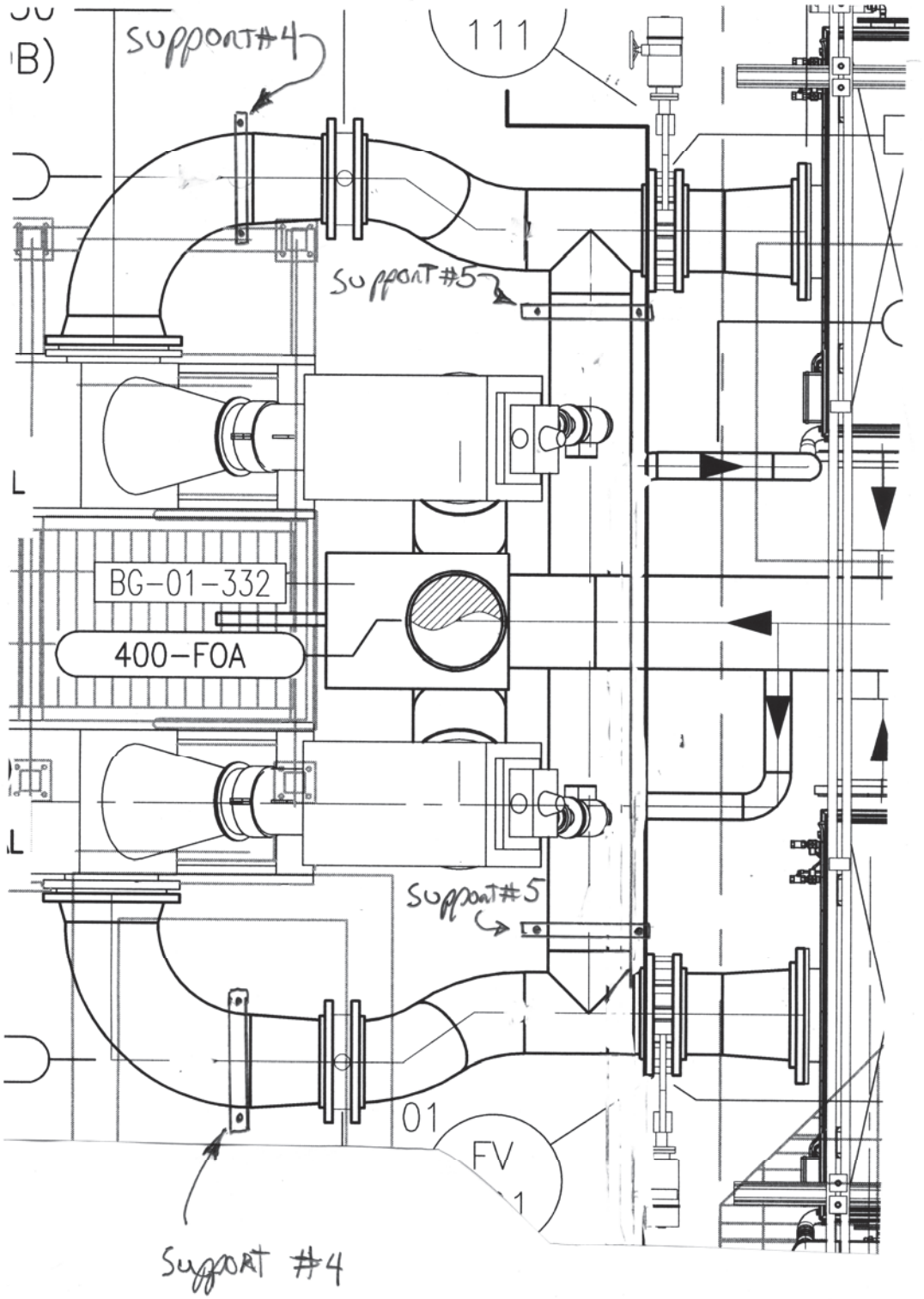

PIPING SUPPORTS

Sheet :	of
By :	
Date :	2018 Nov 20
PC-1820	Rev:

Support # 4

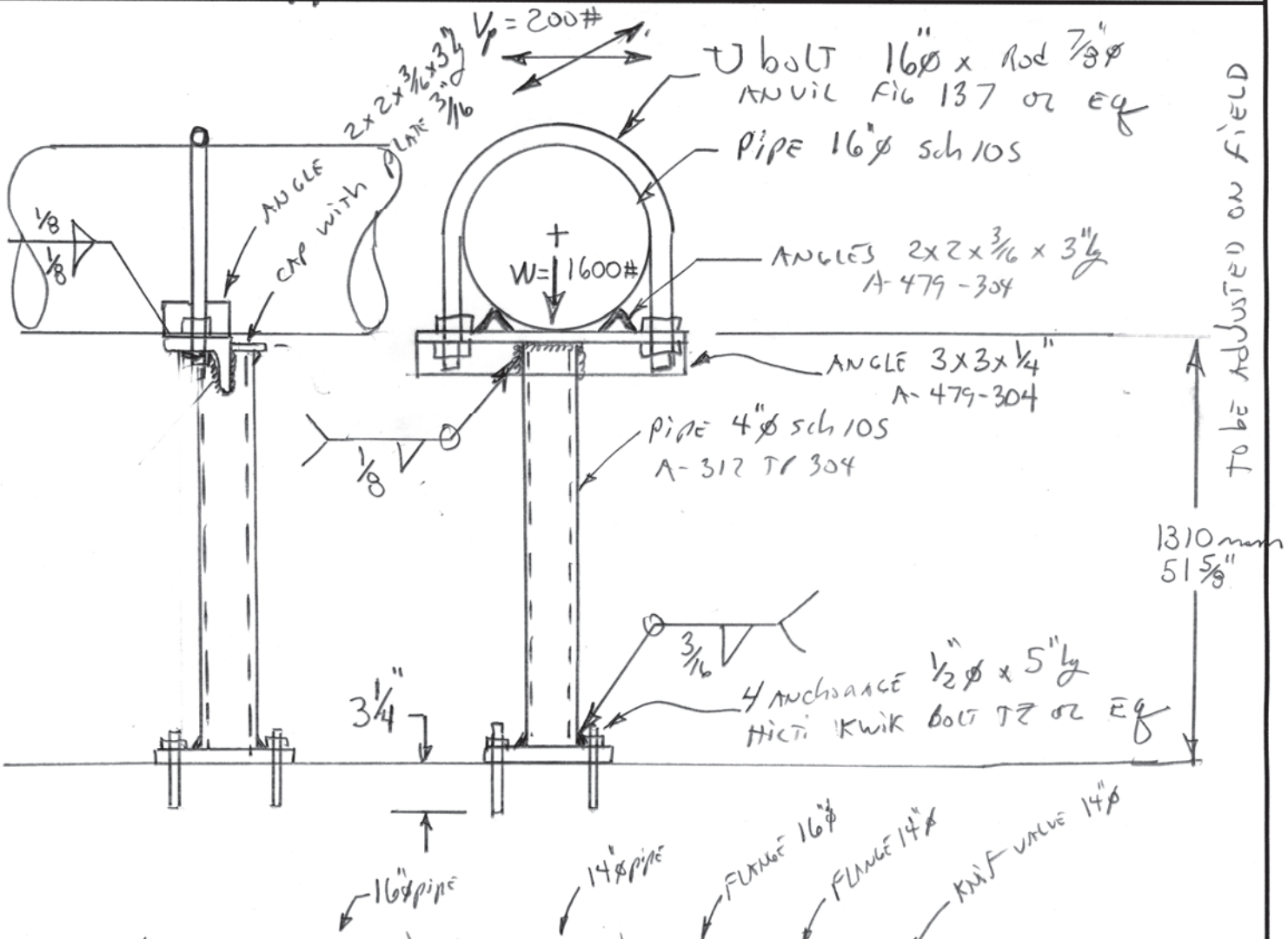

$$W_4 = (4.5\ ft \times 128\ \#/ft) + (5\ ft \times 95\ \#/ft) + 130\# + 200\# + 220\#$$

$$= 1600\ Lbs$$

$$7.1\ kN$$

$$V_{p4} = 0.05 \times 1600\ Lbs = 80\ Lbs$$

use 200#

0.9 kN

PIPING SUPPORTS

Sheet :	of
By :	
Date :	2018 Nov 20
PC-1820	Rev:

Support # 4 & 5

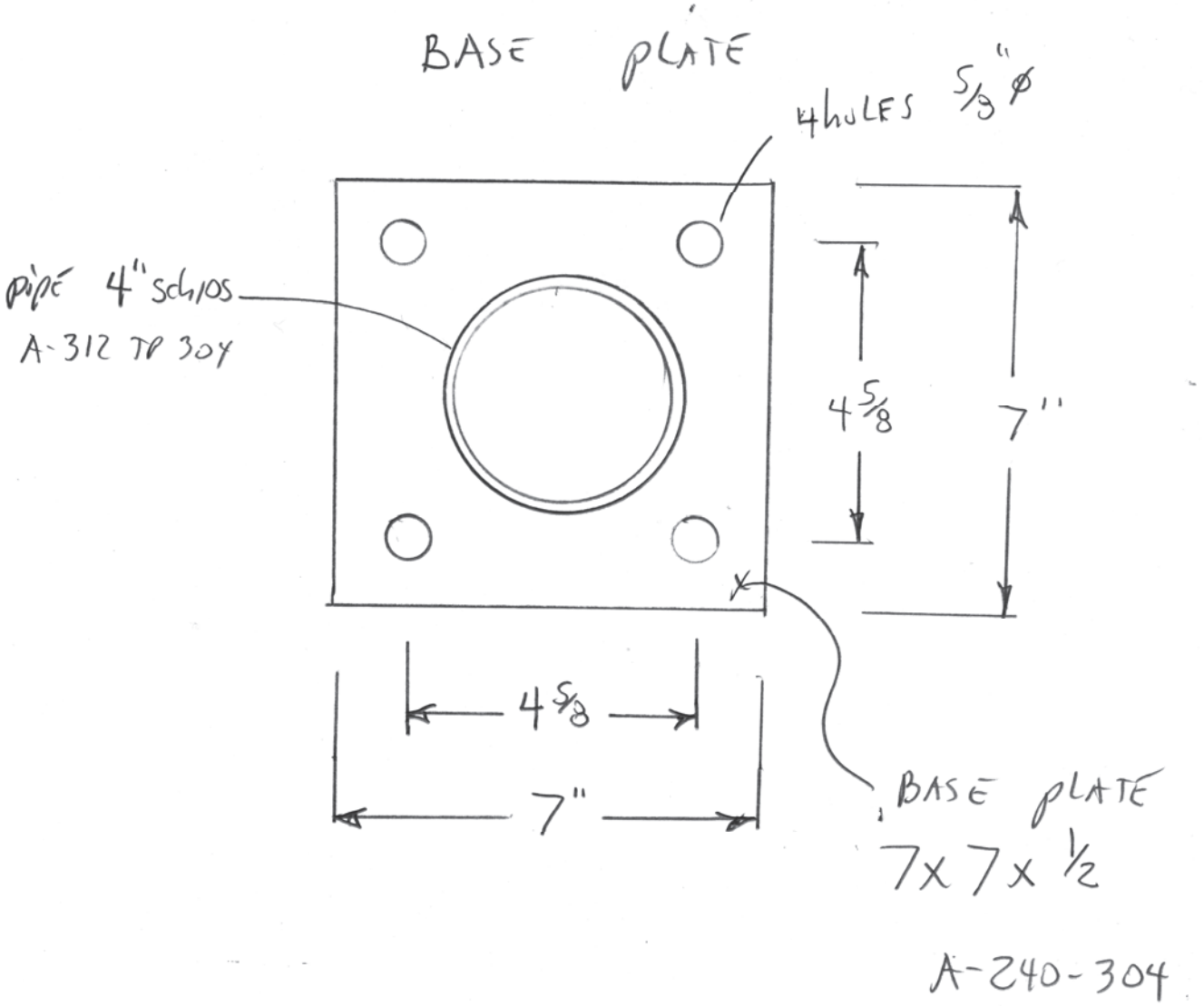

Pipe 4" SCH 10S

ASME Section VIII Division 1, 2013 Edition				
Component		Support Skirt		
Skirt is Attached To		13.2		
Skirt Attachment Offset		0" up from the bottom seam		
Material		SA-312 TP304 Wld & smls pipe (II-D p. 94, ln. 19)		
		Impact Tested[1]	**Normalized**	**Fine Grain Practice**
		No	No	No
Design Temperature				
Internal		100°F		
Dimensions				
Inner Diameter	**Top**	4.26"		
	Botttom	4.26"		
Length (includes base ring thickness)		41"		
Nominal Thickness		0.12"		
Corrosion	**Inner**	0"		
	Outer	0"		
Weight				
New		19.39 lb		
Corroded		19.39 lb		
Joint Efficiency				
Top		0.55		
Bottom		0.8		

[1] Impact testing requirements are not checked for supports

Skirt design thickness, largest of the following + corrosion = 0.0622 in

The governing condition is due to weight, compressive stress at the base, operating & corroded.

The skirt thickness of 0.105 in is adequate.

Results Summary							
Loading	**Condition**	**Tensile or Compressive Side**	**Governing Skirt Location**	**Temperature (°F)**	**Allowable Stress (psi)**	**Calculated Stress/E (psi)**	**Required thickness (in)**
Weight	operating, corroded	Tensile	bottom	100	20 000	6 155.82	0.0369
		Compressive			13 307.43	6 894.52	0.0622
	empty, corroded	Tensile	bottom	70	20 000	7 367.05	0.0442
		Compressive			13 307.43	5 925.54	0.0534

Loading due to weight, operating & corroded

Windward side (tensile)

Required thickness, tensile stress at base:

$t = -W / (\pi * D * S_t * E) + 48 * M / (\pi * D^2 * S_t * E)$
$= -1\,626.34 / (\pi * 4.38 * 20\,000 * 0.8) + 48 * 890.4 / (\pi * 4.38^2 * 20\,000 * 0.8)$
$= 0.0369$ in

Required thickness, tensile stress at the top:

$t = -W_t / (\pi * D_t * S_t * E) + 48 * M_t / (\pi * D_t^2 * S_t * E)$
$= -1\,606.94 / (\pi * 4.38 * 20\,000 * 0.55) + 48 * 207.1 / (\pi * 4.38^2 * 20\,000 * 0.55)$
$= 0.0044$ in

Leeward side (compressive)

Required thickness, compressive stress at base:

$t = W / (\pi * D * S_c * E_c) + 48 * M / (\pi * D^2 * S_c * E_c)$
$= 1\,626.34 / (\pi * 4.38 * 13\,307 * 1) + 48 * 890.4 / (\pi * 4.38^2 * 13\,307 * 1)$
$= 0.0622$ in

Required thickness, compressive stress at the top:

$t = W_t / (\pi * D_t * S_c * E_c) + 48 * M_t / (\pi * D_t^2 * S_c * E_c)$
$= 1\,606.94 / (\pi * 4.38 * 13\,307 * 1) + 48 * 207.1 / (\pi * 4.38^2 * 13\,307 * 1)$
$= 0.0212$ in

Base Plate 7 x 7 x 1/2"

Inputs	
Base configuration	single base plate without gussets
Base plate material	A-240-304
Base plate allowable stress, S_p	20 000 psi
Foundation compressive strength	1 658 psi
Concrete ultimate 28-day strength	3 000 psi
Bolt circle, BC	6.5"
Base plate inner diameter, D_i	2"
Base plate outer diameter, D_o	7"
Base plate thickness, t_b	0.5"
Anchor Bolts	
Material	A-307 gr B
Allowable stress, S_b	15 000 psi
Bolt size and type	0.5" coarse threaded
Number of bolts, N	4
Corrosion allowance (applied to root radius)	0"
Anchor bolt clearance	0.125"
Bolt root area (corroded), A_b	0.13 in^2
Diameter of anchor bolt holes, d_b	0.625"
Initial bolt preload	75% (11 250 psi)
Bolt at 0°	No

Results Summary							
Load	Vessel condition	Base V (lb_f)	Base M (lb_f-ft)	W (lb)	Required bolt area (in^2)	t_r Base (in)	Foundation bearing stress (psi)
Weight	operating, corroded	200	890.4	1 631.3	0.0824	0.4503	865.04
Weight	operating, new	200	890.4	1 631.3	0.0824	0.4503	865.04
Weight	empty, corroded	200	890.4	31.3	0.1091	0.4527	874.53
Weight	empty, new	200	890.4	31.3	0.1091	0.4527	874.53

Anchor bolt load (governing)

P = -W / N + 48 * M / (N*BC)
= -31.34 / 4 + 48 * 890.4 / (4*6.5)
= 1 636.02 lb_f

Required area per bolt = P / S_b = 0.1091 in^2

The area provided (0.126 in^2) by the specified anchor bolt is adequate.

Support calculations (Jawad & Farr chapter 12, governing)

Base plate width, t_c:	2.5	in
Average base plate diameter, d:	4.5	in
Base plate elastic modulus, E_s:	28.0E+06	psi
Base plate yield stress, S_y:	30 000	psi

E_c = 57 000*Sqr(3 000) = 3 122 019 psi

n = E_s/E_c = 28.0E+06 / 3 122 019 = 8.9686

$t_s = (N*A_b) / (\pi*d)$
= (4*0.126) / (π*4.5)
= 0.0357 in

From table 12.4 for k = 0.331137:

K_1 = 2.3745, K_2 = 1.5915
L_1 = 0.7603, L_2 = 2.3421, L_3 = 1.1787

Total tensile force on bolting

$T = (12*M - W*(L_1 + L_3)) / (L_2 + L_3)$
= (12*890.4 - 31.34 *(0.7603 + 1.1787)) / (2.3421 + 1.1787)
= 3 017.54 lb_f

Tensile stress in bolts use the larger of f_s or bolt preload = 11 250 psi

$f_s = T / (t_s * (d / 2) * K_1)$
= 3 017.54 / (0.0357 * (4.5 / 2) * 2.3745)
= 15 843 psi

Total compressive load on foundation

C_c = T + W + Bolt Preload
= 3 017.54 + 31.34 + 5 670
= 8 718.88 lb_f

Foundation bearing stress

$f_c = C_c / (((t_c - t_s) + n*t_s)*(d / 2)*K_2)$
= 8 718.88 / (((2.5 - 0.0357) + 8.9686*0.0357)*(4.5 / 2)*1.5915)
= 875 psi

As f_c <= 1 658 psi the base plate width is satisfactory.

$k = 1 / (1 + f_s / (n*f_c))$
= 1 / (1 + 15 843 / (8.9686*875))
= 0.331137

Base plate required thickness (governing)

$t_r = (3*f_c*L^2 / S_p)^{0.5}$
= $(3*875*1.25^2 / 20\ 000)^{0.5}$
= 0.4527 in

The base plate thickness is satisfactory.

LOCAL STRESS on 16" SCH 10S PIPE

Geometry	
Height (radial)	1"
Width (circumferential)	8"
Length	3"
Fillet Weld Size:	0.125"
Located On	TUYAU 16" SCH 10S (24" from bottom end)
Location Angle	0.00°

Applied Loads	
Radial load, P_r	1 600 lb_f
Circumferential moment, M_c	0 lb_f-in
Circumferential shear, V_c	200 lb_f
Longitudinal moment, M_L	0 lb_f-in
Longitudinal shear, V_L	0 lb_f
Torsion moment, M_t	0 lb_f-in
Internal pressure, P	75 psi
Mean shell radius, R_m	7.8943"
Design factor	3

Maximum stresses due to the applied loads at the lug edge (includes pressure)

$\gamma = R_m / T = 7.8943 / 0.1645 = 47.9894$

$C_1 = 4.125$, $C_2 = 1.625$ in

Local circumferential pressure stress = $P*R_i / T$ =3 562 psi

Local longitudinal pressure stress = $P*R_i / (2*T)$ =1 781 psi

Maximum combined stress (P_L+P_b+Q) = 22 775 psi
Allowable combined stress (P_L+P_b+Q) = ±3*S = ±60 000 psi

The maximum combined stress (P_L+P_b+Q) is within allowable limits.

Maximum local primary membrane stress (P_L) = -4 304 psi
Allowable local primary membrane stress (P_L) = ±1.5*S = ±30 000 psi

The maximum local primary membrane stress (P_L) is within allowable limits.

Stresses at the lug edge per WRC Bulletin 107										
Figure	**value**	**β**	**A_u**	**A_l**	**B_u**	**B_l**	**C_u**	**C_l**	**D_u**	**D_l**
3C*	2.2299	0.3128	0	0	0	0	-2 747	-2 747	-2 747	-2 747
4C*	3.4745	0.4423	-4 281	-4 281	-4 281	-4 281	0	0	0	0
1C	0.0619	0.4558	0	0	0	0	-21 960	21 960	-21 960	21 960
2C-1	0.006	0.4558	-2 129	2 129	-2 129	2 129	0	0	0	0
3A*	1.3086	0.3831	0	0	0	0	0	0	0	0
1A	0.0596	0.4731	0	0	0	0	0	0	0	0
3B*	3.6032	0.2808	0	0	0	0	0	0	0	0
1B-1	0.0102	0.3707	0	0	0	0	0	0	0	0
Pressure stress*			3 562	3 562	3 562	3 562	3 562	3 562	3 562	3 562
Total circumferential stress			-2 848	1 410	-2 848	1 410	-21 145	22 775	-21 145	22 775
Primary membrane circumferential stress*			-719	-719	-719	-719	815	815	815	815
3C*	1.2779	0.4423	-1 574	-1 574	-1 574	-1 574	0	0	0	0
4C*	4.9389	0.3128	0	0	0	0	-6 085	-6 085	-6 085	-6 085
1C-1	0.0242	0.3616	-8 585	8 585	-8 585	8 585	0	0	0	0
2C	0.03	0.3616	0	0	0	0	-10 643	10 643	-10 643	10 643
4A*	4.7354	0.3831	0	0	0	0	0	0	0	0
2A	0.0242	0.3793	0	0	0	0	0	0	0	0
4B*	1.8108	0.2808	0	0	0	0	0	0	0	0
2B-1	0.0238	0.3054	0	0	0	0	0	0	0	0
Pressure stress*			1 781	1 781	1 781	1 781	1 781	1 781	1 781	1 781
Total longitudinal stress			-8 378	8 792	-8 378	8 792	-14 947	6 339	-14 947	6 339
Primary membrane longitudinal stress*			207	207	207	207	-4 304	-4 304	-4 304	-4 304
Shear from M_t			0	0	0	0	0	0	0	0
Circ shear from V_c			74	74	-74	-74	0	0	0	0
Long shear from V_L			0	0	0	0	0	0	0	0
Total Shear stress			74	74	-74	-74	0	0	0	0
Combined stress (P_L+P_b+Q)			-8 379	8 793	-8 379	8 793	-21 145	22 775	-21 145	22 775
* denotes primary stress.										

PIPING SUPPORTS

Sheet :	of
By :	
Date :	2018 Nov 20
PC-1820	Rev:

Support #5

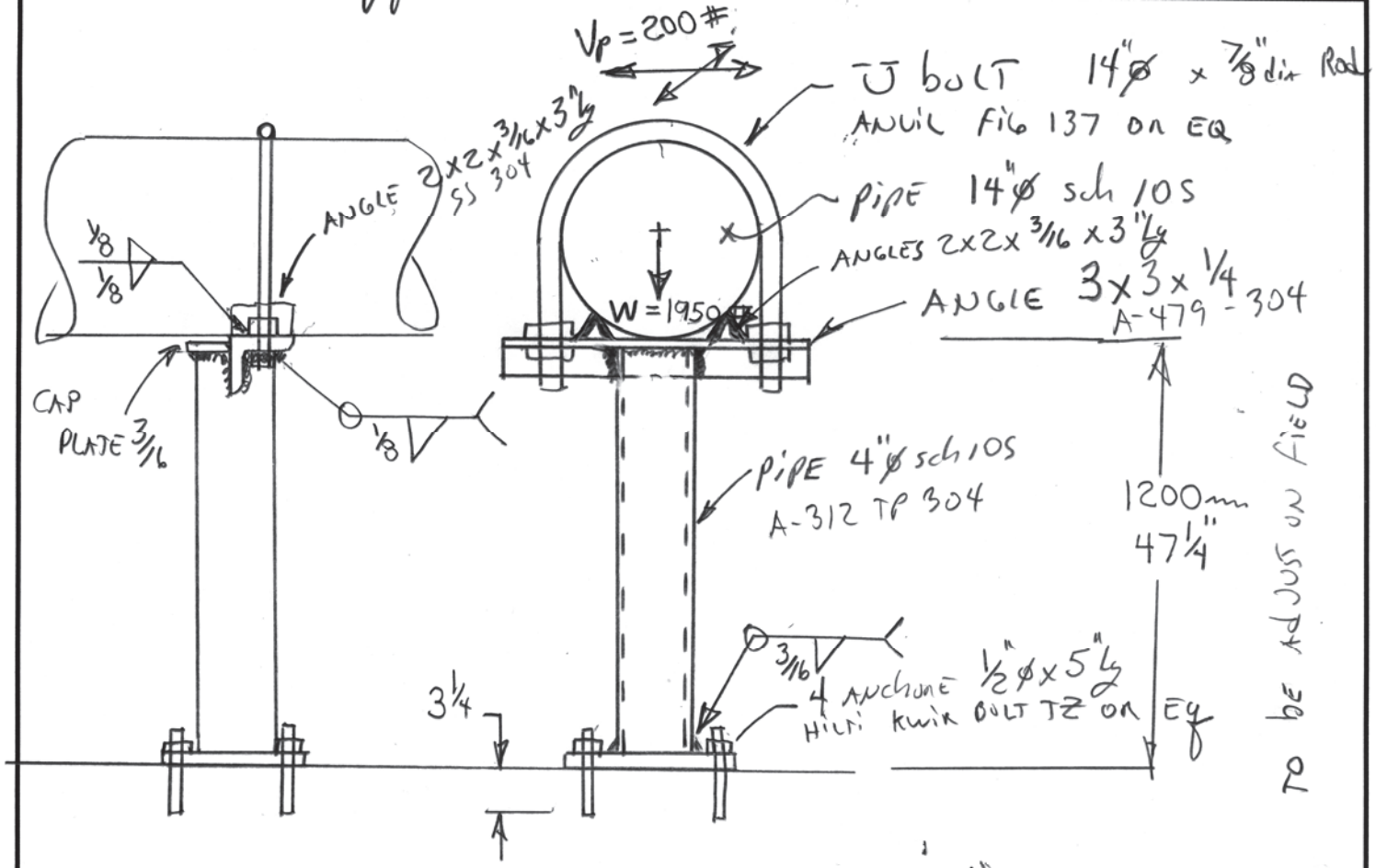

pipe 14" sch 10S

knife valve 14"ø

flanges

$W_s = (10\frac{1}{2}\,ft \times 95\,\#/ft) + 1.5 \times 370\# + 2 \times 200\#$

$= 1950\,\#$

$8.7\,KN$

$V_{ps} = 0.05 \times 1950\# = 97\#$ USE 200 Lbs

$0.90\,KN$

Pipe 4" SCH 10S

ASME Section VIII Division 1, 2013 Edition				
Component		Support Skirt		
Skirt is Attached To		13.2		
Skirt Attachment Offset		0" up from the bottom seam		
Material		SA-312 TP304 Wld & smls pipe (II-D p. 94, ln. 19)		
		Impact Tested[1]	**Normalized**	**Fine Grain Practice**
		No	No	No
Design Temperature				
Internal		100°F		
Dimensions				
Inner Diameter	**Top**	4.26"		
	Botttom	4.26"		
Length (includes base ring thickness)		37"		
Nominal Thickness		0.12"		
Corrosion	**Inner**	0"		
	Outer	0"		
Weight				
New		17.48 lb		
Corroded		17.48 lb		
Joint Efficiency				
Top		0.55		
Bottom		0.8		

[1] Impact testing requirements are not checked for supports

Skirt design thickness, largest of the following + corrosion = 0.0589 in

The governing condition is due to weight, compressive stress at the base, operating & corroded.

The skirt thickness of 0.105 in is adequate.

Results Summary							
Loading	**Condition**	**Tensile or Compressive Side**	**Governing Skirt Location**	**Temperature (°F)**	**Allowable Stress (psi)**	**Calculated Stress/E (psi)**	**Required thickness (in)**
Weight	operating, corroded	Tensile	bottom	100	20 000	5 505.79	0.033
		Compressive			13 307.43	6 529.63	0.0589
	empty, corroded	Tensile	bottom	70	20 000	6 815.43	0.0409
		Compressive			13 307.43	5 481.92	0.0494

Loading due to weight, operating & corroded

Windward side (tensile)

Required thickness, tensile stress at base:

$t = -W / (\pi*D*S_t*E) + 48*M / (\pi*D^2*S_t*E)$
$= -1\ 754.42 / (\pi*4.38*20\ 000*0.8) + 48*823.8 / (\pi*4.38^2*20\ 000*0.8)$
$= 0.033$ in

Required thickness, tensile stress at the top:

$t = -W_t / (\pi*D_t*S_t*E) + 48*M_t / (\pi*D_t^2*S_t*E)$
$= -1\ 736.94 / (\pi*4.38*20\ 000*0.55) + 48*207.1 / (\pi*4.38^2*20\ 000*0.55)$
$= 0.0035$ in

Leeward side (compressive)

Required thickness, compressive stress at base:

$t = W / (\pi*D*S_c*E_c) + 48*M / (\pi*D^2*S_c*E_c)$
$= 1\ 754.42 / (\pi*4.38*13\ 307*1) + 48*823.8 / (\pi*4.38^2*13\ 307*1)$
$= 0.0589$ in

Required thickness, compressive stress at the top:

$t = W_t / (\pi*D_t*S_c*E_c) + 48*M_t / (\pi*D_t^2*S_c*E_c)$
$= 1\ 736.94 / (\pi*4.38*13\ 307*1) + 48*207.1 / (\pi*4.38^2*13\ 307*1)$
$= 0.0219$ in

Base Plate 7 x 7 x 1/2"

Inputs	
Base configuration	single base plate without gussets
Base plate material	A-240-304
Base plate allowable stress, S_p	20 000 psi
Foundation compressive strength	1 658 psi
Concrete ultimate 28-day strength	3 000 psi
Bolt circle, BC	6.5"
Base plate inner diameter, D_i	2"
Base plate outer diameter, D_o	7"
Base plate thickness, t_b	0.5"
Anchor Bolts	
Material	A-307 gr B
Allowable stress, S_b	15 000 psi
Bolt size and type	0.5" coarse threaded
Number of bolts, N	4
Corrosion allowance (applied to root radius)	0"
Anchor bolt clearance	0.125"
Bolt root area (corroded), A_b	0.13 in^2
Diameter of anchor bolt holes, d_b	0.625"
Initial bolt preload	75% (11 250 psi)
Bolt at 0°	No

Results Summary							
Load	Vessel condition	Base V (lb_f)	Base M (lb_f-ft)	W (lb)	Required bolt area (in^2)	t_r Base (in)	Foundation bearing stress (psi)
Weight	operating, corroded	200	823.8	1 759.4	0.0721	0.4437	839.92
Weight	operating, new	200	823.8	1 759.4	0.0721	0.4437	839.92
Weight	empty, corroded	200	823.8	29.4	0.1009	0.4441	841.52
Weight	empty, new	200	823.8	29.4	0.1009	0.4441	841.52

Anchor bolt load (governing)

P = -W / N + 48 * M / (N*BC)
= -29.42 / 4 + 48 * 823.8 / (4*6.5)
= 1 513.42 lb_f

Required area per bolt = P / S_b = 0.1009 in^2

The area provided (0.126 in^2) by the specified anchor bolt is adequate.

Support calculations (Jawad & Farr chapter 12, governing)

Base plate width, t_c:	2.5	in
Average base plate diameter, d:	4.5	in
Base plate elastic modulus, E_s:	28.0E+06	psi
Base plate yield stress, S_y:	30 000	psi

E_c = 57 000*Sqr(3 000) = 3 122 019 psi

n = E_s/E_c = 28.0E+06 / 3 122 019 = 8.9686

$t_s = (N*A_b) / (\pi*d)$
= (4*0.126) / (π*4.5)
= 0.0357 in

From table 12.4 for k = 0.338481:

K_1 = 2.3585, K_2 = 1.6106
L_1 = 0.7272, L_2 = 2.3175, L_3 = 1.2045

Total tensile force on bolting

$T = (12*M - W*(L_1 + L_3)) / (L_2 + L_3)$
= (12*823.8 - 29.42 *(0.7272 + 1.2045)) / (2.3175 + 1.2045)
= 2 790.51 lb_f

Tensile stress in bolts use the larger of f_s or bolt preload = 11 250 psi

$f_s = T / (t_s * (d / 2) * K_1)$
= 2 790.51 / (0.0357 * (4.5 / 2) * 2.3585)
= 14 750 psi

Total compressive load on foundation

C_c = T + W + Bolt Preload
= 2 790.51 + 29.42 + 5 670
= 8 489.94 lb_f

Foundation bearing stress

$f_c = C_c / (((t_c - t_s) + n*t_s)*(d / 2)*K_2)$
= 8 489.94 / (((2.5 - 0.0357) + 8.9686*0.0357)*(4.5 / 2)*1.6106)
= 842 psi

As f_c <= 1 658 psi the base plate width is satisfactory.

$k = 1 / (1 + f_s / (n*f_c))$
= 1 / (1 + 14 750 / (8.9686*842))
= 0.338481

Base plate required thickness (governing)

$t_r = (3*f_c*L^2 / S_p)^{0.5}$
= $(3*842*1.25^2 / 20\ 000)^{0.5}$
= 0.4441 in

The base plate thickness is satisfactory.

LOCAL STRESS on 14"SCH 10S PIPE

Geometry	
Height (radial)	1"
Width (circumferential)	8"
Length	3"
Fillet Weld Size:	0.125"
Located On	TUYAU 14" SCH 10S (24" from bottom end)
Location Angle	0.00°

Applied Loads	
Radial load, P_r	1 950 lb_f
Circumferential moment, M_c	0 lb_f-in
Circumferential shear, V_c	200 lb_f
Longitudinal moment, M_L	0 lb_f-in
Longitudinal shear, V_L	0 lb_f
Torsion moment, M_t	0 lb_f-in
Internal pressure, P	75 psi
Mean shell radius, R_m	6.8943"
Design factor	3

Maximum stresses due to the applied loads at the lug edge (includes pressure)

$\gamma = R_m / T = 6.8943 / 0.1645 = 41.9103$

$C_1 = 4.125$, $C_2 = 1.625$ in

Local circumferential pressure stress = $P*R_i / T$ =3 106 psi

Local longitudinal pressure stress = $P*R_i / (2*T)$ =1 553 psi

Maximum combined stress (P_L+P_b+Q) = 26 817 psi
Allowable combined stress (P_L+P_b+Q) = ±3*S = ±60 000 psi

The maximum combined stress (P_L+P_b+Q) is within allowable limits.

Maximum local primary membrane stress (P_L) = -5 161 psi
Allowable local primary membrane stress (P_L) = ±1.5*S = ±30 000 psi

The maximum local primary membrane stress (P_L) is within allowable limits.

Stresses at the lug edge per WRC Bulletin 107										
Figure	**value**	**β**	**A_u**	**A_l**	**B_u**	**B_l**	**C_u**	**C_l**	**D_u**	**D_l**
3C*	1.725	0.3582	0	0	0	0	-2 966	-2 966	-2 966	-2 966
4C*	2.6787	0.5065	-4 606	-4 606	-4 606	-4 606	0	0	0	0
1C	0.0617	0.5219	0	0	0	0	-26 677	26 677	-26 677	26 677
2C-1	0.0061	0.5219	-2 637	2 637	-2 637	2 637	0	0	0	0
3A*	1.0517	0.4386	0	0	0	0	0	0	0	0
1A	0.0608	0.5447	0	0	0	0	0	0	0	0
3B*	2.8274	0.3215	0	0	0	0	0	0	0	0
1B-1	0.0098	0.4283	0	0	0	0	0	0	0	0
Pressure stress*			3 106	3 106	3 106	3 106	3 106	3 106	3 106	3 106
Total circumferential stress			-4 137	1 137	-4 137	1 137	-26 537	26 817	-26 537	26 817
Primary membrane circumferential stress*			-1 500	-1 500	-1 500	-1 500	140	140	140	140
3C*	0.9953	0.5065	-1 711	-1 711	-1 711	-1 711	0	0	0	0
4C*	3.9048	0.3582	0	0	0	0	-6 714	-6 714	-6 714	-6 714
1C-1	0.0229	0.4141	-9 901	9 901	-9 901	9 901	0	0	0	0
2C	0.03	0.4141	0	0	0	0	-12 971	12 971	-12 971	12 971
4A*	4.0178	0.4386	0	0	0	0	0	0	0	0
2A	0.0259	0.4351	0	0	0	0	0	0	0	0
4B*	1.4939	0.3215	0	0	0	0	0	0	0	0
2B-1	0.0237	0.3519	0	0	0	0	0	0	0	0
Pressure stress*			1 553	1 553	1 553	1 553	1 553	1 553	1 553	1 553
Total longitudinal stress			-10 059	9 743	-10 059	9 743	-18 132	7 810	-18 132	7 810
Primary membrane longitudinal stress*			-158	-158	-158	-158	-5 161	-5 161	-5 161	-5 161
Shear from M_t			0	0	0	0	0	0	0	0
Circ shear from V_c			74	74	-74	-74	0	0	0	0
Long shear from V_L			0	0	0	0	0	0	0	0
Total Shear stress			74	74	-74	-74	0	0	0	0
Combined stress (P_L+P_b+Q)			-10 060	9 744	-10 060	9 744	-26 537	26 817	-26 537	26 817
* denotes primary stress.										

PIPING SUPPORTS

Sheet :	of
By :	
Date :	2018 Nov 20
PC-1820	Rev:

Support # 6

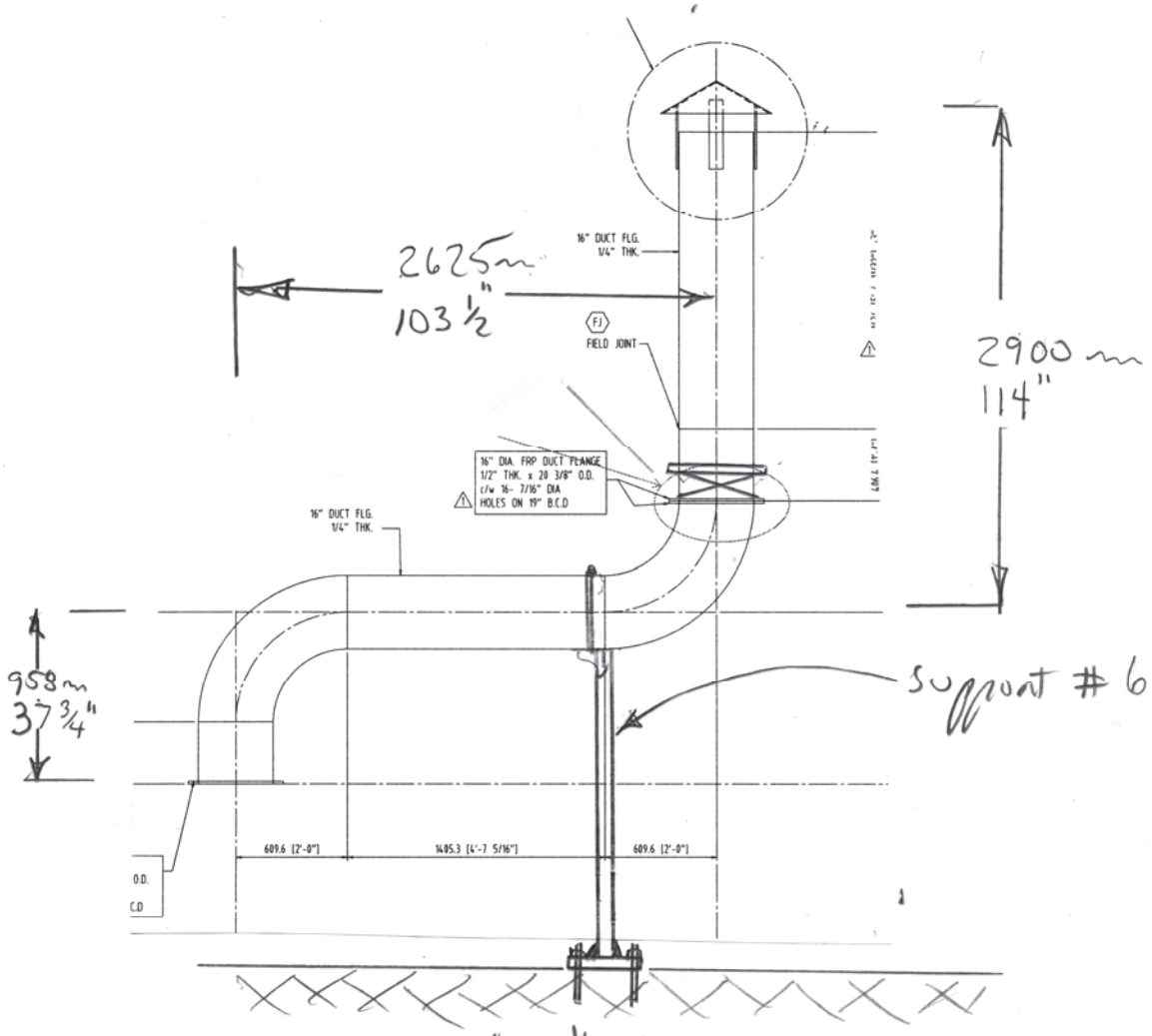

pipe 16" ϕ sch 1/4 — valve — flange

$W_{16} = (20' \times 42\#/ft) + 110\# + 260\#$

$= 1210$ lbs

$V_{P6} = 0.05 \times 1210 = 60\#$ use $200\#$

PIPING SUPPORTS

Support #6

Sheet :	of
By :	
Date :	2018 Nov 20
PC-1820	Rev:

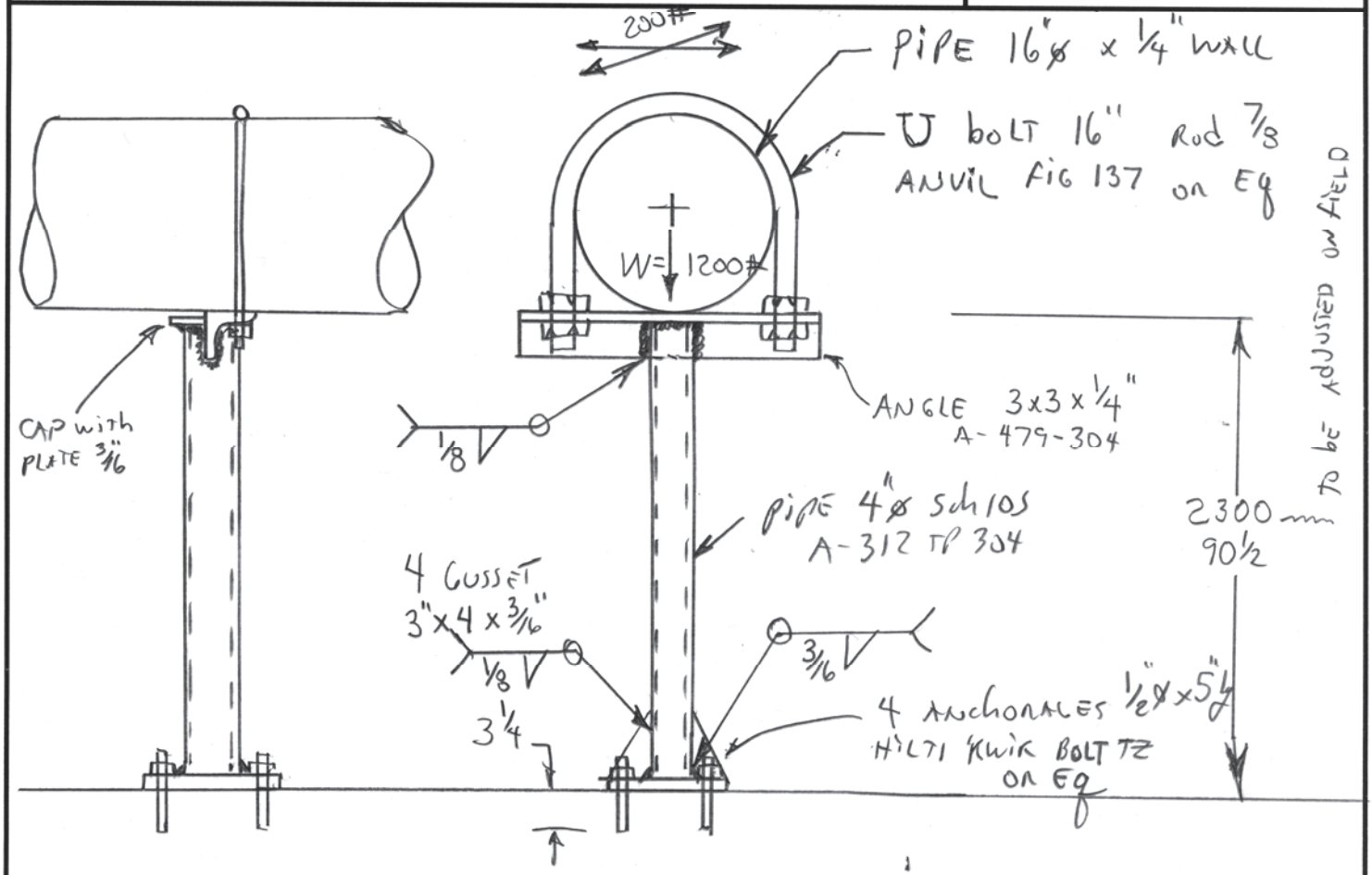

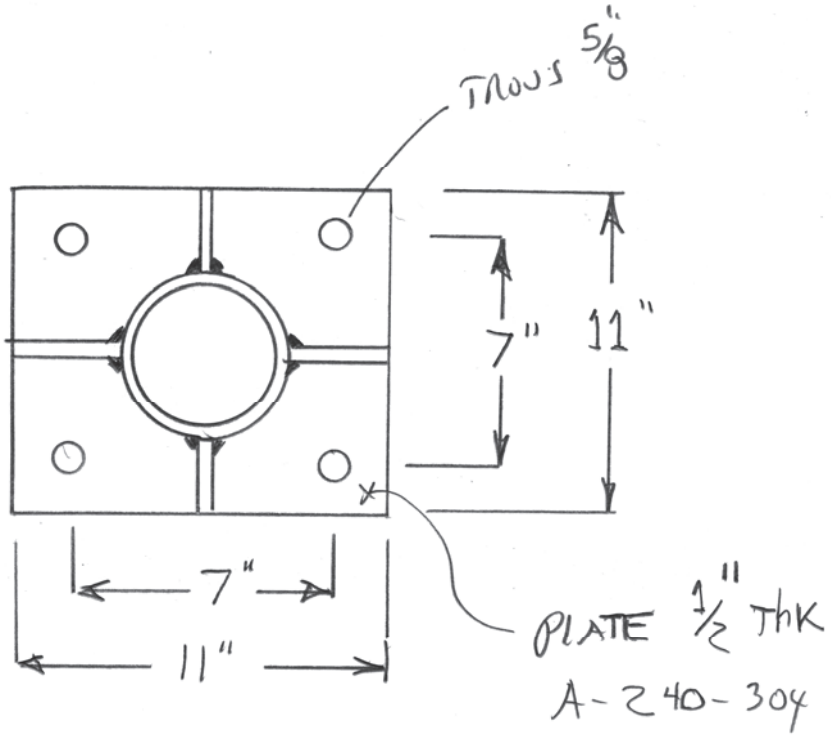

Pipe 4" SCH 10S

ASME Section VIII Division 1, 2013 Edition				
Component		Support Skirt		
Skirt is Attached To		13.2		
Skirt Attachment Offset		0" up from the bottom seam		
Material		SA-312 TP304 Wld & smls pipe (II-D p. 94, ln. 19)		
		Impact Tested[1]	**Normalized**	**Fine Grain Practice**
		No	No	No
Design Temperature				
Internal		100°F		
Dimensions				
Inner Diameter	**Top**	4.26"		
	Botttom	4.26"		
Length (includes base ring thickness)		71"		
Nominal Thickness		0.12"		
Corrosion	**Inner**	0"		
	Outer	0"		
Weight				
New		33.76 lb		
Corroded		33.76 lb		
Joint Efficiency				
Top		0.55		
Bottom		0.8		

[1] Impact testing requirements are not checked for supports

Skirt design thickness, largest of the following + corrosion = 0.098 in

The governing condition is due to weight, compressive stress at the base, operating & corroded.

The skirt thickness of 0.105 in is adequate.

Results Summary							
Loading	**Condition**	**Tensile or Compressive Side**	**Governing Skirt Location**	**Temperature (°F)**	**Allowable Stress (psi)**	**Calculated Stress/E (psi)**	**Required thickness (in)**
Weight	operating, corroded	Tensile	bottom	100	20 000	11 699.02	0.0702
		Compressive			13 307.43	10 866.63	0.098
	empty, corroded	Tensile	bottom	70	20 000	12 607.44	0.0756
		Compressive			13 307.43	10 139.9	0.0914

Loading due to weight, operating & corroded

Windward side (tensile)

Required thickness, tensile stress at base:

$t = -W / (\pi*D*S_t*E) + 48*M / (\pi*D^2*S_t*E)$
$= -1\,244.53 / (\pi*4.38*20\,000*0.8) + 48*1\,523.8 / (\pi*4.38^2*20\,000*0.8)$
$= 0.0702$ in

Required thickness, tensile stress at the top:

$t = -W_t / (\pi*D_t*S_t*E) + 48*M_t / (\pi*D_t^2*S_t*E)$
$= -1\,210.78 / (\pi*4.38*20\,000*0.55) + 48*340.4 / (\pi*4.38^2*20\,000*0.55)$
$= 0.0166$ in

Leeward side (compressive)

Required thickness, compressive stress at base:

$t = W / (\pi*D*S_c*E_c) + 48*M / (\pi*D^2*S_c*E_c)$
$= 1\,244.53 / (\pi*4.38*13\,307*1) + 48*1\,523.8 / (\pi*4.38^2*13\,307*1)$
$= 0.098$ in

Required thickness, compressive stress at the top:

$t = W_t / (\pi*D_t*S_c*E_c) + 48*M_t / (\pi*D_t^2*S_c*E_c)$
$= 1\,210.78 / (\pi*4.38*13\,307*1) + 48*340.4 / (\pi*4.38^2*13\,307*1)$
$= 0.027$ in

Base Plate 11 X 11X 1/2"

Inputs	
Base configuration	single base plate
Base plate material	A-240-304
Base plate allowable stress, S_p	20 000 psi
Foundation compressive strength	1 658 psi
Concrete ultimate 28-day strength	3 000 psi
Bolt circle, BC	10"
Base plate inner diameter, D_i	2"
Base plate outer diameter, D_o	11"
Base plate thickness, t_b	0.5"
Gusset separation, w	3"
Gusset height, h	4"
Gusset thickness, t_g	0.1875"
Anchor Bolts	
Material	A-307 gr B
Allowable stress, S_b	15 000 psi
Bolt size and type	0.5" coarse threaded
Number of bolts, N	4
Corrosion allowance (applied to root radius)	0"
Anchor bolt clearance	0.125"
Bolt root area (corroded), A_b	0.13 in^2
Diameter of anchor bolt holes, d_b	0.625"
Initial bolt preload	25% (3 750 psi)
Bolt at 0°	No

Results Summary							
Load	Vessel condition	Base V (lb_f)	Base M (lb_f-ft)	W (lb)	Required bolt area (in^2)	t_r Base (in)	Foundation bearing stress (psi)
Weight	operating, corroded	200	1 523.8	1 260.5	0.1009	0.4717	337.73
Weight	operating, new	200	1 523.8	1 260.5	0.1009	0.4717	337.73
Weight	empty, corroded	200	1 523.8	60.5	0.1209	0.4725	338.93
Weight	empty, new	200	1 523.8	60.5	0.1209	0.4725	338.93

Anchor bolt load (governing)

P = -W / N + 48 * M / (N*BC)
= -60.53 / 4 + 48 * 1 523.8 / (4*10)
= 1 813.37 lb_f

Required area per bolt = P / S_b = 0.1209 in^2

The area provided (0.126 in^2) by the specified anchor bolt is adequate.

Support calculations (Jawad & Farr chapter 12, governing)

Base plate width, t_c:	4.5	in
Average base plate diameter, d:	6.5	in
Base plate elastic modulus, E_s:	28.0E+06	psi
Base plate yield stress, S_y:	30 000	psi

E_c = 57 000*Sqr(3 000) = 3 122 019 psi

n = E_s/E_c = 28.0E+06 / 3 122 019 = 8.9686

$t_s = (N*A_b) / (\pi*d)$
= (4*0.126) / (π*6.5)
= 0.0247 in

From table 12.4 for k = 0.157065:

K_1 = 2.7565, K_2 = 1.0742
L_1 = 2.2293, L_2 = 4.2055, L_3 = 0.8127

Total tensile force on bolting

$T = (12*M - W*(L_1 + L_3)) / (L_2 + L_3)$
= (12*1 523.8 - 60.53 *(2.2293 + 0.8127)) / (4.2055 + 0.8127)
= 3 607.09 lb_f

Tensile stress in bolts use the larger of f_s or bolt preload = 3 750 psi

$f_s = T / (t_s * (d / 2) * K_1)$
= 3 607.09 / (0.0247 * (6.5 / 2) * 2.7565)
= 16 314 psi

Total compressive load on foundation

C_c = T + W + Bolt Preload
= 3 607.09 + 60.53 + 1 890
= 5 557.62 lb_f

Foundation bearing stress

$f_c = C_c / (((t_c - t_s) + n*t_s)*(d / 2)*K_2)$
= 5 557.62 / (((4.5 - 0.0247) + 8.9686*0.0247)*(6.5 / 2)*1.0742)
= 339 psi

As f_c <= 1 658 psi the base plate width is satisfactory.

$k = 1 / (1 + f_s / (n*f_c))$
= 1 / (1 + 16 314 / (8.9686*339))
= 0.157065

Base plate required thickness (governing)

From Brownell & Young, Table 10.3:, l / b = 0.7256

$M_x = 0.0631*339*4.479^2$ = 429.2 lb_f

$M_y = -0.2079*339*3.25^2$ = -744.3 lb_f

$t_r = (6*M_{max} / S_p)^{0.5}$
= $(6*744.28 / 20\ 000)^{0.5}$
= 0.4725 in

The base plate thickness is satisfactory.

Base plate bolt load (Jawad & Farr eq. 12.13, governing)

Bolt load = A_b*f_s =0.126*16 314 = 2 055.53 lb_f

$t_r = (3.91*F / (S_y*(2*b / w+w / (2*l)-d_b*(2 / w+1 / (2*l)))))^{0.5}$
= $(3.91*2\ 055.53 / (30\ 000*(2*3.25 / 3+3 / (2*2.75)-0.625*(2 / 3+1 / (2*2.75)))))^{0.5}$
= 0.3504 in

The base plate thickness is satisfactory.

Check skirt for gusset reaction (Jawad & Farr eq. 12.14)

$S_r = 1.5*F*b / (gussets*\pi*t_{sk}^2*h)$
= $1.5*1\ 813.37*3.25 / (2*\pi*0.12^2*4)$
= 24 426.38 psi

As S_r <= 25 500 psi the skirt thickness is adequate to resist the gusset reaction.

LOCAL STRESS ON PIPE 16" X 1/4"wall

Geometry	
Height (radial)	6"
Width (circumferential)	0.75"
Length	3"
Fillet Weld Size:	0.125"
Located On	TUYAU 16" x 1/4" wall (48" from bottom end)
Location Angle	180.00°

Applied Loads	
Radial load, P_r	1 200 lb_f
Circumferential moment, M_c	0 lb_f-in
Circumferential shear, V_c	200 lb_f
Longitudinal moment, M_L	0 lb_f-in
Longitudinal shear, V_L	200 lb_f
Torsion moment, M_t	0 lb_f-in
Internal pressure, P	75 psi
Mean shell radius, R_m	7.8594"
Design factor	3

Maximum stresses due to the applied loads at the lug edge (includes pressure)

$\gamma = R_m / T = 7.8594 / 0.2188 = 35.9286$

$C_1 = 0.5$, $C_2 = 1.625$ in

Local circumferential pressure stress = $P*R_i / T$ =2 657 psi

Local longitudinal pressure stress = $P*R_i / (2*T)$ =1 328 psi

Maximum combined stress (P_L+P_b+Q) = -20 041 psi
Allowable combined stress (P_L+P_b+Q) = ±3*S = ±60 000 psi

The maximum combined stress (P_L+P_b+Q) is within allowable limits.

Maximum local primary membrane stress (P_L) = -2 510 psi
Allowable local primary membrane stress (P_L) = ±1.5*S = ±30 000 psi

The maximum local primary membrane stress (P_L) is within allowable limits.

Stresses at the lug edge per WRC Bulletin 107										
Figure	**value**	**β**	**A_u**	**A_l**	**B_u**	**B_l**	**C_u**	**C_l**	**D_u**	**D_l**
3C*	4.0811	0.1655	0	0	0	0	-2 849	-2 849	-2 849	-2 849
4C*	5.8647	0.1359	-4 093	-4 093	-4 093	-4 093	0	0	0	0
1C	0.1319	0.102	0	0	0	0	-19 846	19 846	-19 846	19 846
2C-1	0.0946	0.102	-14 234	14 234	-14 234	14 234	0	0	0	0
3A*	1.0365	0.0942	0	0	0	0	0	0	0	0
1A	0.0951	0.1155	0	0	0	0	0	0	0	0
3B*	3.9764	0.1396	0	0	0	0	0	0	0	0
1B-1	0.0426	0.125	0	0	0	0	0	0	0	0
Pressure stress*			2 657	2 657	2 657	2 657	2 657	2 657	2 657	2 657
Total circumferential stress			-15 670	12 798	-15 670	12 798	-20 038	19 654	-20 038	19 654
Primary membrane circumferential stress*			-1 436	-1 436	-1 436	-1 436	-192	-192	-192	-192
3C*	4.7474	0.1359	-3 314	-3 314	-3 314	-3 314	0	0	0	0
4C*	5.4992	0.1655	0	0	0	0	-3 838	-3 838	-3 838	-3 838
1C-1	0.1053	0.1412	-15 844	15 844	-15 844	15 844	0	0	0	0
2C	0.0673	0.1412	0	0	0	0	-10 126	10 126	-10 126	10 126
4A*	1.4191	0.0942	0	0	0	0	0	0	0	0
2A	0.0473	0.1528	0	0	0	0	0	0	0	0
4B*	1.2837	0.1396	0	0	0	0	0	0	0	0
2B-1	0.0534	0.1636	0	0	0	0	0	0	0	0
Pressure stress*			1 328	1 328	1 328	1 328	1 328	1 328	1 328	1 328
Total longitudinal stress			-17 830	13 858	-17 830	13 858	-12 636	7 616	-12 636	7 616
Primary membrane longitudinal stress*			-1 986	-1 986	-1 986	-1 986	-2 510	-2 510	-2 510	-2 510
Shear from M_t			0	0	0	0	0	0	0	0
Circ shear from V_c			457	457	-457	-457	0	0	0	0
Long shear from V_L			0	0	0	0	-141	-141	141	141
Total Shear stress			457	457	-457	-457	-141	-141	141	141
Combined stress (P_L+P_b+Q)			-17 923	14 028	-17 923	14 028	-20 041	19 656	-20 041	19 656
* denotes primary stress.										

PIPING SUPPORTS

Support #7

Sheet :	of
By :	
Date :	2018 Nov 20
PC-1820	Rev:

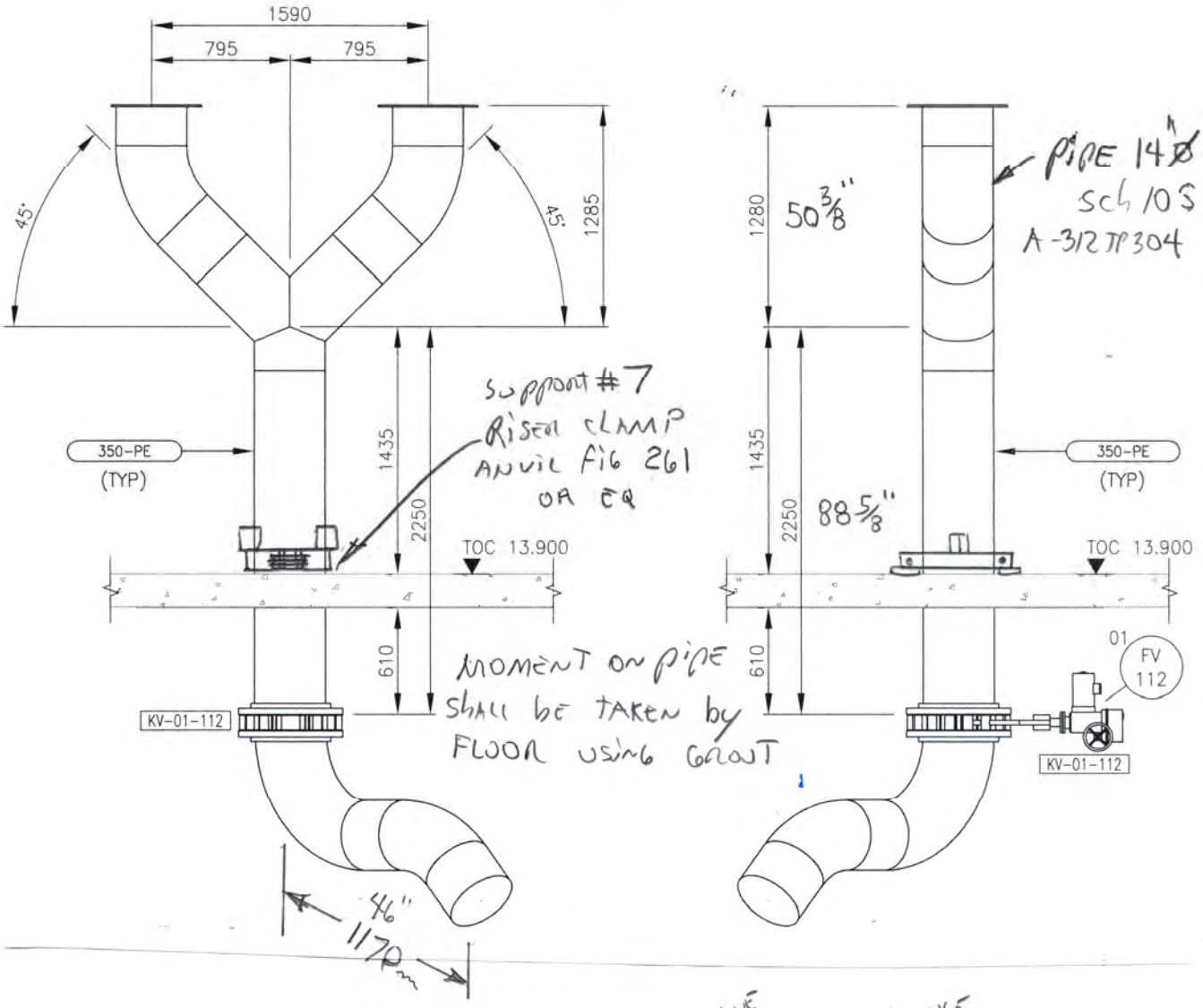

$W_{17} = (19.5\ ft \times 95\ Lbs/ft) + 367\ Lbs + 200\#$ (367 Lbs: VALVE; 200#: FLANGE)

$= 2420\ Lbs$

$V_p = 0.05 \times 2420\ Lbs = 120\ Lbs$ USE 200#

PIPING SUPPORTS

Sheet :	of
By :	
Date :	2018 Nov 20
PC-1820	Rev:

SUPPORT # 7

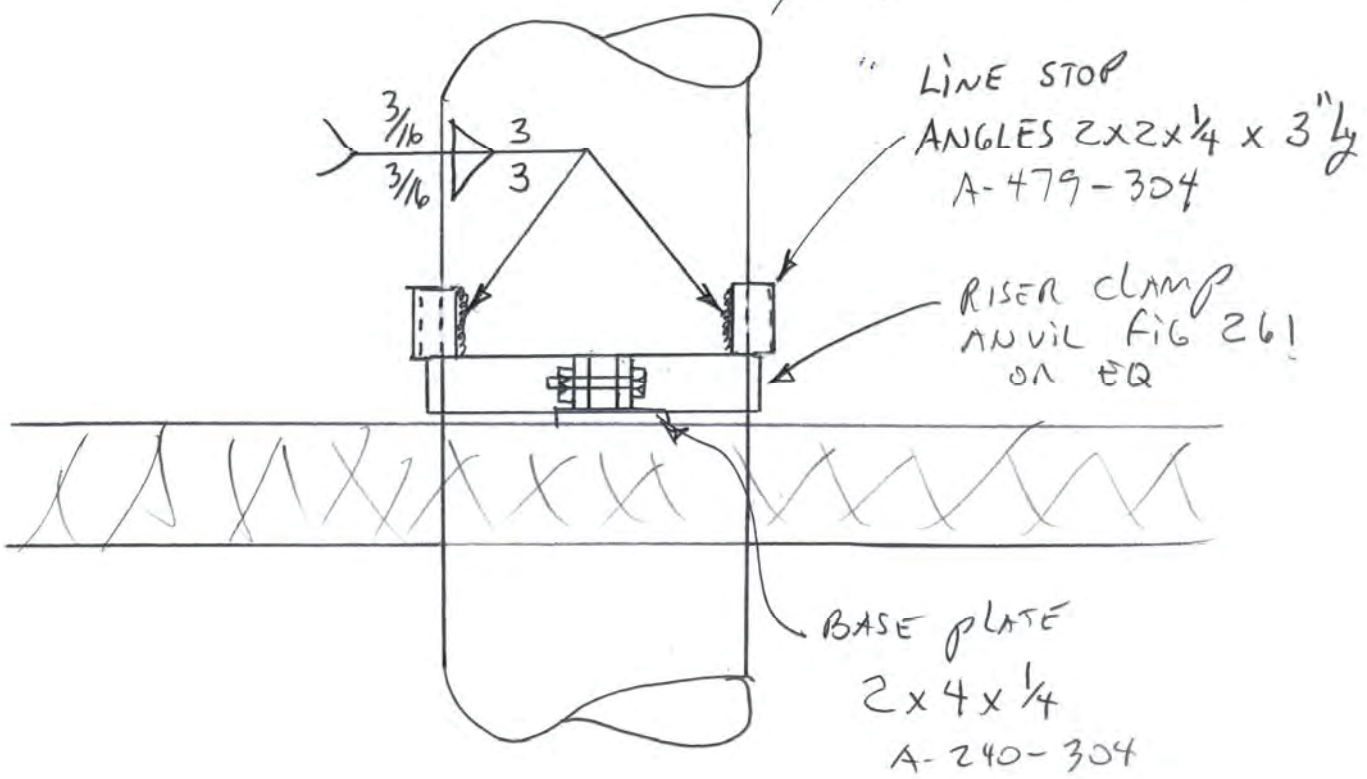

PIPING SUPPORTS

Sheet :	of
By :	
Date :	2018 Nov 20
PC-1820	Rev:

Support #7

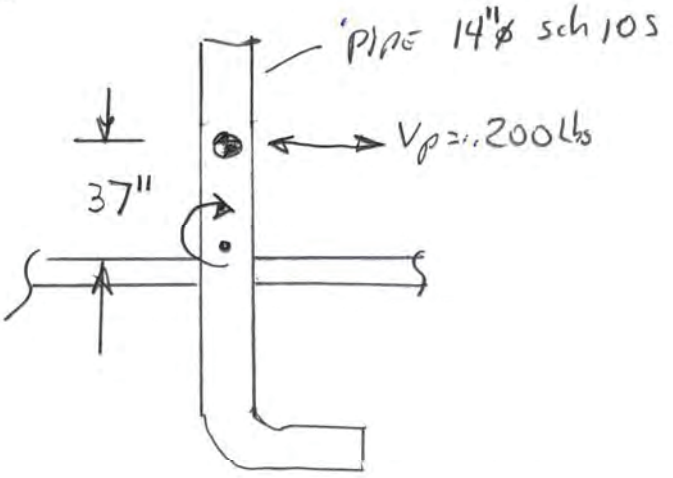

$M = PL = 37' \times 200\ Lbs = 7400\ Lbs\ in$

$\sigma = \frac{M}{S} = \frac{7400\ Lbs \cdot in}{27.7\ in^3} = 267\ psi << 20000$ OK

14" sch 10S

$S = \frac{\pi (D^4 - d^4)}{32 D} = \frac{\pi (14^4 - 13\frac{5}{8}^4)}{32 \times 14} = 27.7\ in^3$

MASSES

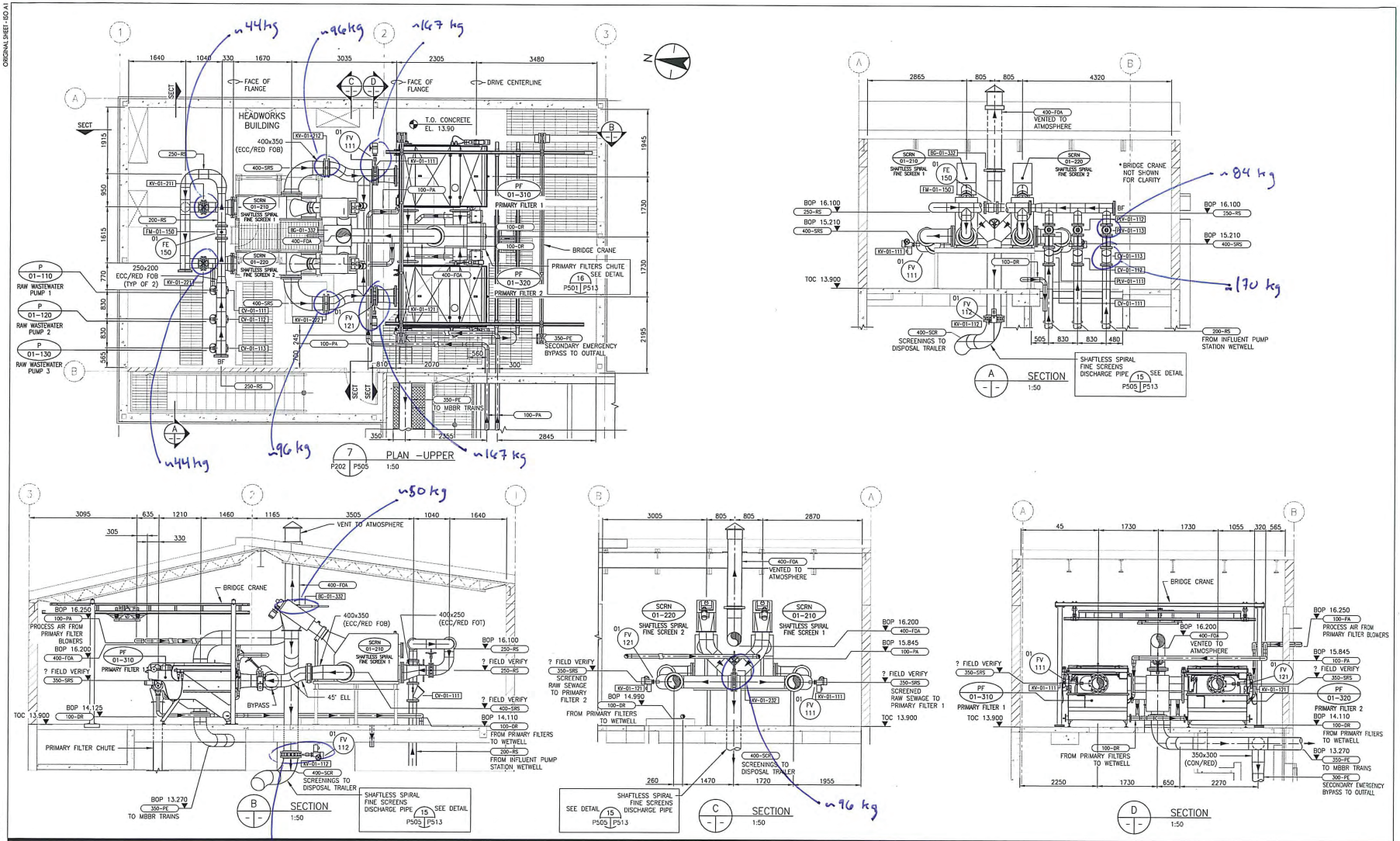

Revision

		By	Appd.	YY.MM.DD
1	ISSUED FOR CONSTRUCTION	TR	AR	18.05.23
0	ISSUED FOR BID	TR	AR	18.04.09

Issued

	By	Appd.	YY.MM.DD

Consultants

Permit-Seal

PERMIT TO PRACTICE
NUNAMI STANTEC LTD.
Signature
Date 9 APRIL 2018
PERMIT NUMBER: P 1117
NT/NU Association of Professional Engineers and Geoscientists
110126045

REGISTERED PROFESSIONAL ENGINEER
A. ROJAS
LICENSEE
NT / NU

NUNAMI
STANTEC LIMITED

1088C Noble House
Iqaluit NU
www.stantec.com

The Contractor shall verify and be responsible for all dimensions. DO NOT scale the drawing - any errors or omissions shall be reported to Stantec without delay.
The Copyrights to all designs and drawings are the property of Stantec. Reproduction or use for any purpose other than that authorized by Stantec is forbidden.

Client/Project
Iqaluit
ᐃᖃᓗᐃᑦ

IQALUIT WASTEWATER TREATMENT PLANT UPGRADE
City of Iqaluit, Nunavut

File Name: P505 — Wand Dwn. — Chkd. — Dsgn. — 2017.10.03 YY.MM.DD

Title
PROCESS
UPPER - FINE SCREENS AND PRIMARY FILTERS DETAILS

Project No. 1101126045
Scale 1:50 (0, 500, 1500, 2500mm)
Drawing No. P505
Sheet of
Revision 0

REVIEWED BY CONTRACTOR

Kudlik Construction Ltd.

NAME: Sandra Rousseau P.Eng

DATE: Mar 04, 2019

NORCLAIR
MÉCANIQUE DE PROCÉDÉ

SHOP DRAWINGS

DA-MP-42 CCN-16 Chute valve support **Date :** 2019-03-01

Information general	
Project : **WWTP UPGRADE - IQALUIT**	
Client : Kudlik Construction Ltd. To : Sandra Rousseau P.Eng., Project Manager	Project number : **2018-062** E-mail : srousseau@kudlik.biz
Contractor : **Norclair inc.**	Project number Norclair : **P1039**
Address : 1100, Montée Masson, Laval, QC, Canada H7E 4P2	
Project Manager : Hugo Chartier, Project Manager E-mail: hchartier@norclair.ca	
Phone : 450-688-4012 # 706	Cell. : 514-703-0263

Information, subcontractor or supplier	
Sub/supplier : Norclair	
Contact :	Phone :

Information on the equipment	
Speciality : **Process**	
Equipment : CCN-16 Chute valve support	
Drawing reference :	
Specification reference : **40 05 13** (Page xx / xx)	Division :
Article :	Number of pages : 11

CONSULTANT APPROVAL

STANTEC PROJECT #: 110126045

SUBMITTAL # DA-MP-42/Chute Valve Support

This review by Stantec is for general conformance with the design concept of Stantec's design of the:

☐ Architectural ☐ Electrical
☑ Structural ☐ Other
☐ Mechanical

Stantec

☑ REVIEWED
☐ REVIEWED, AS NOTED
☐ REVISE AND RESUBMIT
☐ NOT REVIEWED

DATE 2019-03-07

BY Petr Polivka

component(s) only and does not mean that Stantec has verified or approves the shop drawing(s). The Contractor remains solely responsible for the shop drawing(s) and this review by Stantec does not relieve the Contractor of the Contractor's responsibility for errors or omissions in the shop drawing(s) or for meeting all requirements of the contract documents. This review does not mean that Stantec approves the detailed design inherent in the shop drawing, responsibility for which shall remain with the Contractor submitting same, nor does this review mean that Stantec accepts any deviation of the shop drawing(s) from the contract documents. The Contractor is responsible for confirming all dimensions and correlating them at the job site, for all construction means, methods and techniques, and for coordination of construction work of all trades, including coordination of all shop drawings.

1100, montée Masson
Laval, QC, Canada
H7E 4P2

Phone. : 450-688-4012
Fax : 450-661-6341
E-Mail : info@norclair.ca
www.norclair.ca

CUSTOMER : **IQALUIT WASTE WATER TREATMENT PLANT UPGRADE**



MANUFACTURER : **NORCLAIR**

DESCRIPTION : **CHUTE**
Add a gate valve 12"dia

JOB # : **P1039**

CALCULATION # : **PC-1928**

DRAWING : **CHUTE Detail 16 Lower CNN-16**
2019 feb 25

CODE : **NBCC 2015**
ASME B31.3 2014 ed
MSS SP-58 2009 ed

0	2019 Feb 26	For approval	S. Cloutier	
Rev	Date	Description	Prep. by	Appr. by

CHUTE	Sheet : of
	By :
	Date : 2019 Feb 26
	Rev:

SEISMIC LOADS

(FOR PIPING)
AS PER NBCC 2015
IQUALUIT NUNAVUT

$S_a(0.2) = 0.087$
$S_a(0.5) = 0.065$
$S_a(1.0) = 0.043$
$S_a(2.0) = 0.023$

$F_a = 1.24$
$I_E = 1.5$
$C_p = 1$
$A_r = 1$
$R_f = 3$
$A_x = 3$

$$V_p = 0.3\, F_a \cdot S_a(0.2)\, I_E \cdot S_p \cdot W_p$$

$$A_x = 1 + 2\,\frac{h_x}{h_n} = 1 + 2 \times 1 = 3$$

$$S_p = \frac{C_p \cdot A_r \cdot A_x}{R_p}$$

$$S_p = \frac{1 \times 1 \times 3}{3} = 1$$

$$V_p = 0.3 \times F_a \cdot S_a(0.2) \cdot I_E \cdot S_p \cdot W_p$$

$$= 0.3 \times 1.24 \times 0.087 \times 1.5 \times 1 \times W_p$$

$$V_p = 0.05\ W_p$$

CHUTE

Sheet :	of
By :	
Date :	2019 Feb 26
	Rev:

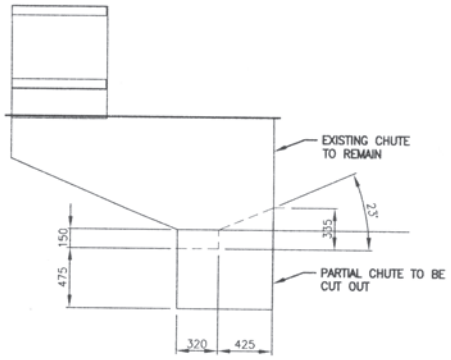

ELEVATION A

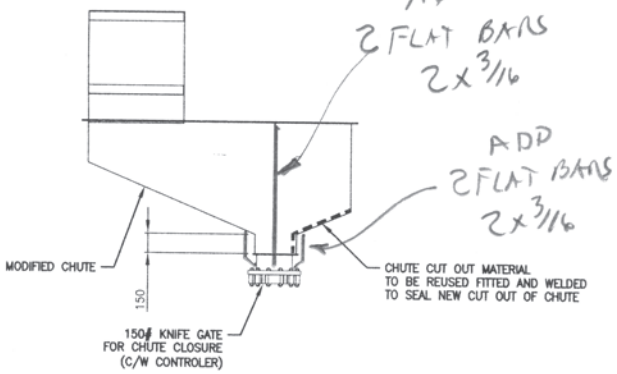

ELEVATION B

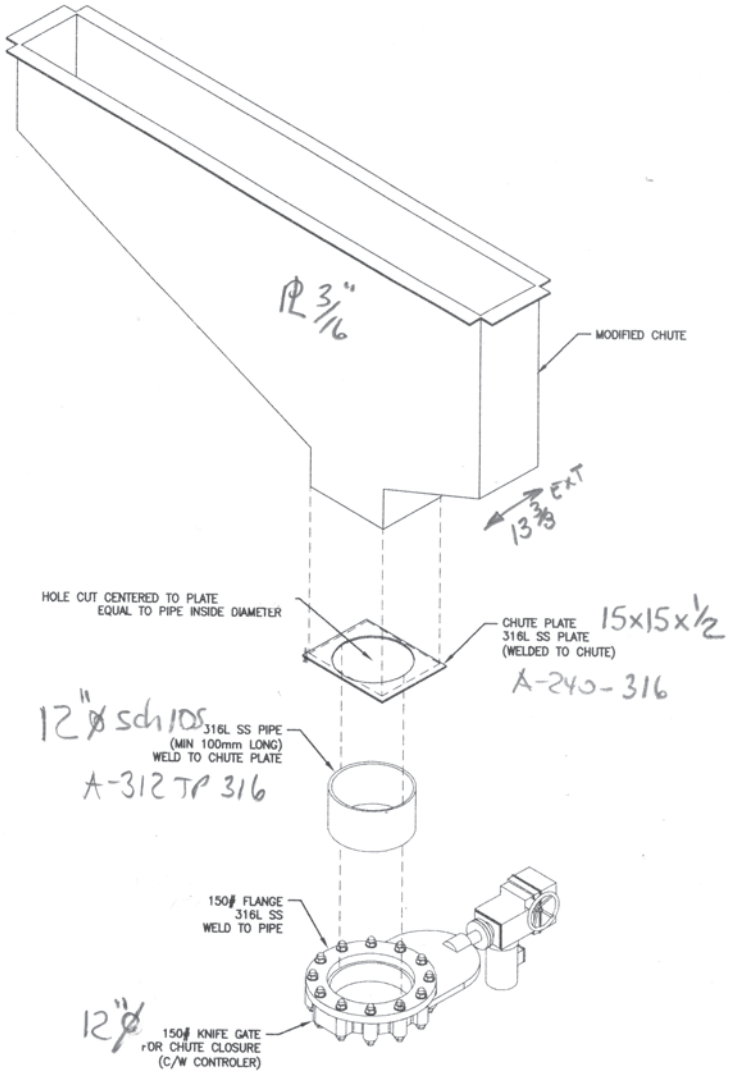

ISOMETRIC

CHUTE MODIFICATION DETAIL
NO SCALE

NOTE
1. PROVIDE CHUTE MADE FROM 316L STAINLESS STEEL (SS1) REFER TO TECHNICAL SPECIFICATIONS DIVISION #40.
2. PROVIDE STRUCTURAL SUPPORT FOR MODIFIED CUTE AND ACTUATED KNIFE GATE VALVE AS REQUIRED.

CHUTE

Sheet :	of
By :	
Date :	2019 Feb 26
	Rev:

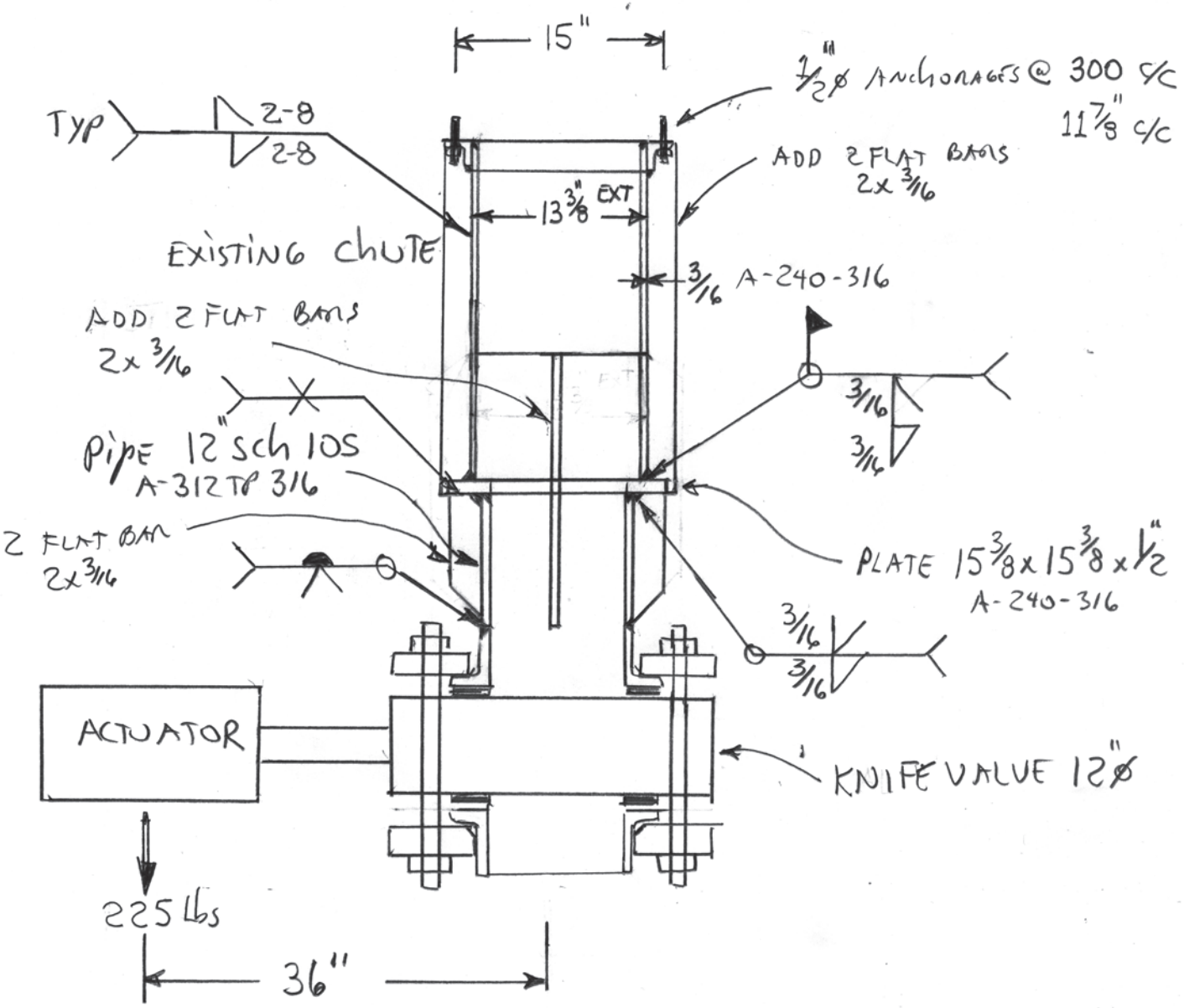

CHUTE	Sheet : of
	By :
	Date : 2019 Feb 26
	, Rev:

LOADS ON STIFFENERS (FLAT bar 2x 3/16)

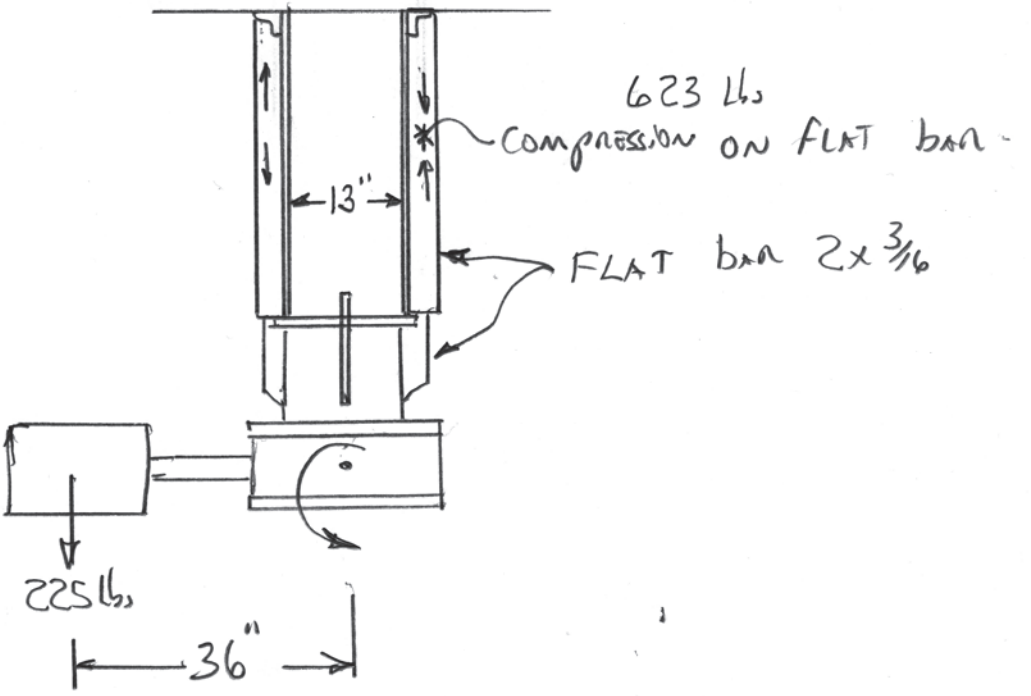

$M = 225\ Lbs \times 36" = 8100\ Lbs \cdot in$

$Compression = \frac{8100\ Lbs}{13"} = 623\ Lbs$

Feuille/Sheet :	de/of
Par/By :	
Date :	
	rev:

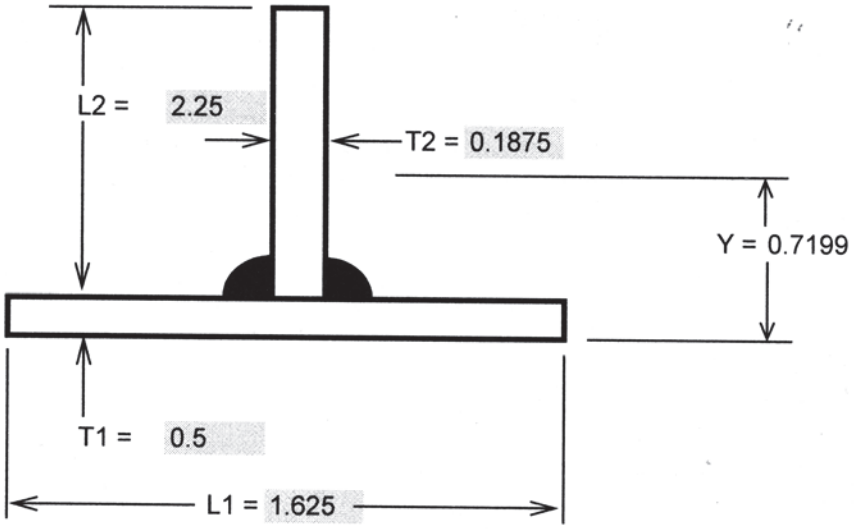

$$Y_1 = \frac{\sum A_i \times Y_i}{\sum A_i} = \frac{(L_1 \times T_1)(T_1/2) + (L_2 \times T_2(T_1 + L_2/2)}{(L_1 \times T_1) + (L_2 \times T_2)} = \quad 0.72 \text{ po}$$

I = 0.0169 + 0.1794 + 0.178 + 0.3456

I = 0.7199 po^4

$$S_1 = \frac{I}{Y_1} = \quad 1.00 \text{ po}^3$$

$$S_2 = \frac{I}{Y_2} = \quad 0.35 \text{ po}^3$$

CHUTE

Sheet :	of
By :	
Date :	2019 Feb 26
	Rev:

COMPRESSION ON FLAT BAR 2 x 3/16"

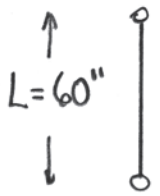

$$\frac{KL}{r} = \frac{1 \times 60}{0.61} = 98 < 136$$

MAT SS-316

$\sigma_y = 30000$ psi

$A = 1.125$ in^2

$S = 0.25$ in^2

$r = 0.61$ in

$C_c = 136$

$$\sigma_a = \frac{\left[1 - \frac{(KL/r)^2}{2C_c^2}\right]}{FS} \times \sigma_y$$

$$= \frac{\left[1 - \frac{98^2}{2 \times 136^2}\right]}{2.5} \times 30000 \text{ psi} = 8884 \text{ psi}$$

$$\sigma_{real} = \frac{F}{A} = \frac{623 \text{ lbs}}{1.125} = 554 \text{ psi} << 8884 \text{ psi}$$

OK FLAT BAR 2 x 3/16"

Feuille/Sheet :	de/of
Par/By :	
Date :	
	rev:

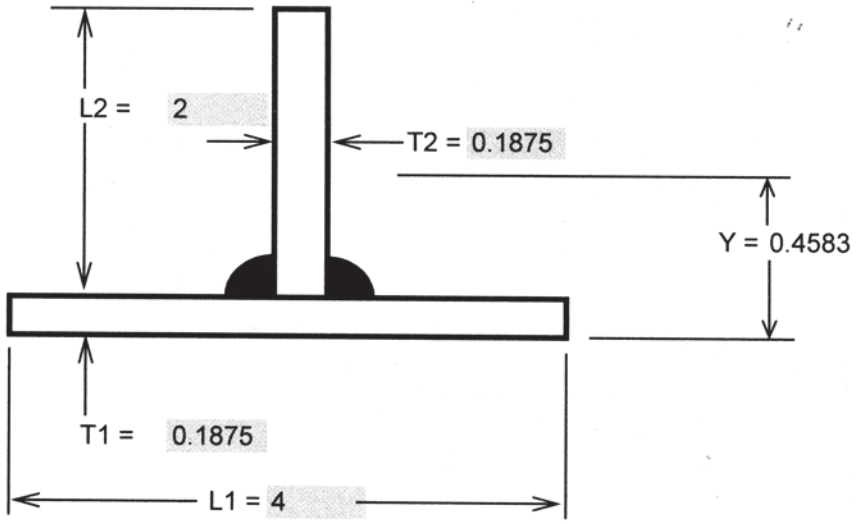

$$Y_1 = \frac{\sum A_i \times Y_i}{\sum A_i} = \frac{(L_1 \times T_1)(T_1/2)+(L_2 \times T_2(T_1+L_2/2)}{(L_1 \times T_1)+(L_2 \times T_2)} = \quad 0.46 \text{ po}$$

I = 0.0022 + 0.0997 + 0.125 + 0.1994

I = 0.4263 po^4

$$S_1 = \frac{I}{Y_1} = \quad 0.93 \text{ po}^3$$

$$S_2 = \frac{I}{Y_2} = \quad 0.25 \text{ po}^3$$

CHUTE	Sheet : of
	By :
	Date : 2019 Feb 26
	Rev:

LOAD ON ANCHORAGE

$$Weight_{WATER} = \frac{13' \times 12.5''}{144\ in/ft^2} \times 4\ ft\ height \times 63\ \#/ft^2 = 285\ Lbs$$

$$VALVE = 350\ Lbs$$

$$V_p = W_{TOTAL} \times 0.05 = 32\ Lbs$$

$$T_{TENSION\ ON\ BOLT} = \frac{weight}{N_{b\ ANCHORAGE}} + \frac{V_p \times h}{d \times N_b} + \frac{T_{ACTUATOR}}{N_b}$$

$$T = \frac{635\ Lbs}{2} + \frac{32 Lbs \times 60''}{12'' \times 1} + \frac{623\ Lbs}{4}$$

$$T = 635\ Lbs/_{ANCHORAGE} < 2207\ Lbs$$

OK ANCHORAGE

HILTI KWIK BOLT TZ

$\frac{1}{2}''\phi \times 3\ \frac{3}{4}''$ lg

OR EQ

CHUTE

Sheet :	of
By :	
Date :	2019 Feb 26
	Rev:

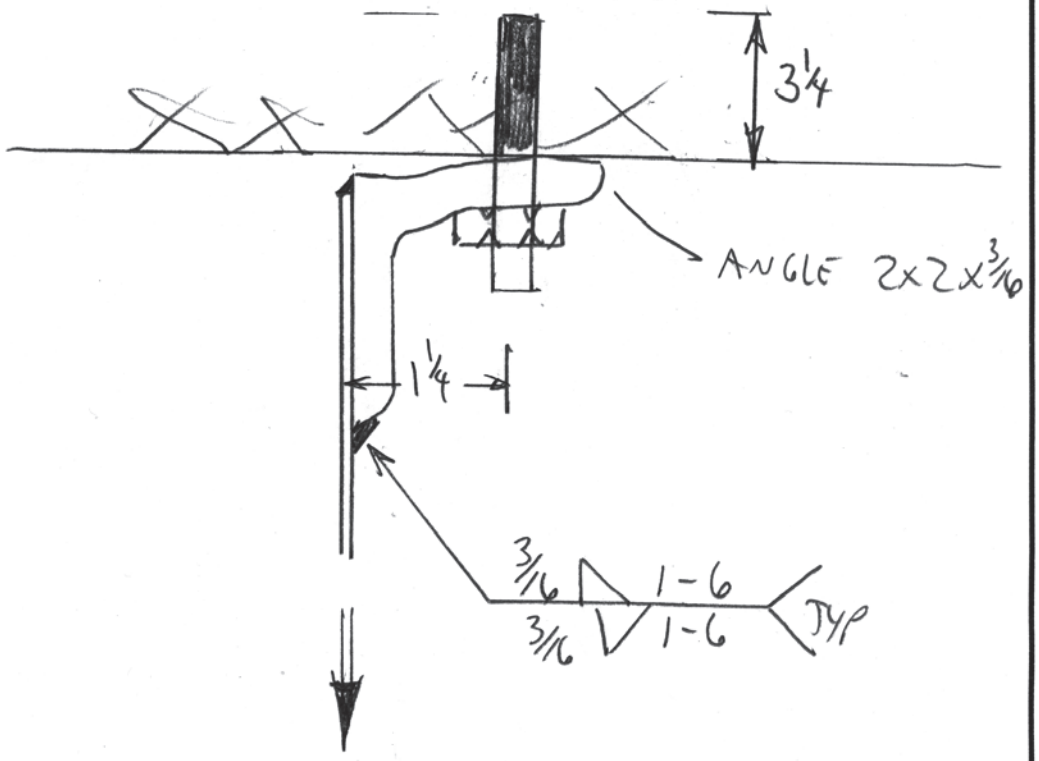

$M = PL = 635 \times 1.25" = 794 \text{ Lbs} \cdot \text{in}$

$\sigma = \frac{M}{S} = \frac{794 \text{ Lbs.in}}{0.07 \text{ in}^3} = 11340 \text{ psi} < 20\,000 \text{ psi}$

$\frac{12" \times (3/16")^2}{6}$

SUBMITTALS IDENTIFICATION SHEET

PROJECT: Wastewater Treatment Plant Upgrade
Iqaluit, Nunavut

NUNAMI
STANTEC LIMITED
1088C Noble House
Iqaluit NU
www.stantec.com

CONTRACTOR: Kudlik Construction Ltd, Project 2018-062

Telephone: 867-979-1166

E-mail: srousseau@kudlik.biz

SUBCONTRACTOR: Structure MH

Person responsible: Moise Harvey

Telephone: (418)487-8772 E-mail: structures.mh@gmail.com

PRODUCT SUBMITTED:

☑ As Specified

☐ Alternate

SUPPLIER or MANUFACTURER:

Person responsible:

Telephone: E-mail:

DESCRIPTION OF SUBMITTAL:

# of pages:

Reference to drawings:

Reference to specs:

Division: 05 Section: 05 12 23 - 05 21 00

REMARKS:

REVIEW AND COMMENTS (for use by Consultants):

THIS SET OF SHOP DRAWINGS HAS BEEN PREPARED AFTER STEEL HAS BEEN ERECTED ONSITE. THE DRAWINGS DO NOT ACCURATELY REFLECT THE MODIFICATIONS THAT WERE MADE TO THE STEEL STRUCTURE ONSITE. DRAWINGS SHOULD BE UPDATED TO REFLECT THE SITE CONDITION.

STANTEC PROJECT #: 110126045

SUBMITTAL # STC-001R4

This review by Stantec is for general conformance with the design concept of Stantec's design of the:

☐ Architectural ☐ Electrical
☑ Structural ☐ Other
☐ Mechanical

component(s) only and does not mean that Stantec has verified or approves the shop drawing(s). The Contractor remains solely responsible for the shop drawing(s) and this review by Stantec does not relieve the Contractor of the Contractor's responsibility for errors or omissions in the shop drawing(s) or for meeting all requirements of the contract documents. This review does not mean that Stantec approves the detailed design inherent in the shop drawing, responsibility for which shall remain with the Contractor submitting same, nor does this review mean that Stantec accepts any deviation of the shop drawing(s) from the contract documents. The Contractor is responsible for confirming all dimensions and correlating them at the job site, for all construction means, methods and techniques, and for coordination of construction work of all trades, including coordination of all shop drawings.

Stantec

☐ REVIEWED

☐ REVIEWED, AS NOTED

☑ REVISE AND RESUBMIT

☐ NOT REVIEWED

DATE 2019-02-21

BY pclyne

Review of this submission is for compliance with general intent of the contract. This review does not relieve the Sub-Contractor, Supplier or Manufacturer of responsibility for error or omissions in the submission or the responsibility of meeting all requirements of the contract documents. Any deviation from the contract documents initiated by the Sub-Contractor, Supplier or Manufacturer shall be at their sole risk. QUANTITIES AND DETAIL DIMENSIONS ARE THE SUB-CONTRACTORS OR SUPPLIERS RESPONSIBILITY. VERIFY DATA WITH FIELD DIMENSIONS.

SUBMITTAL TRACKING No.: **STC-001 rev4**

2019-01-31

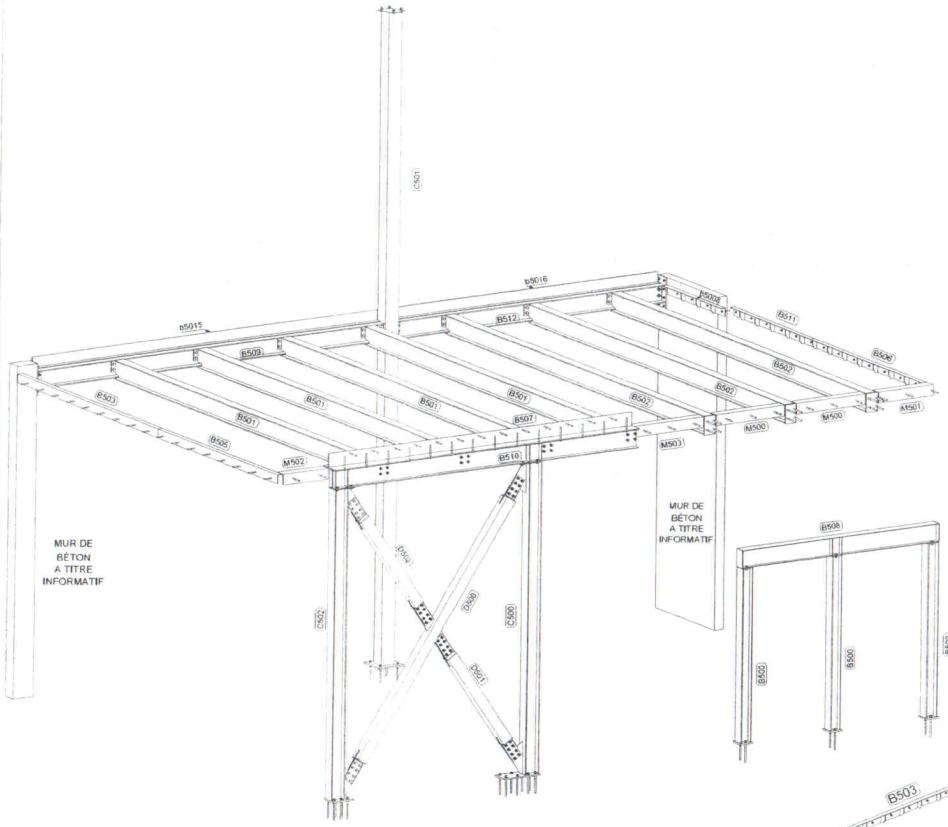

3D view

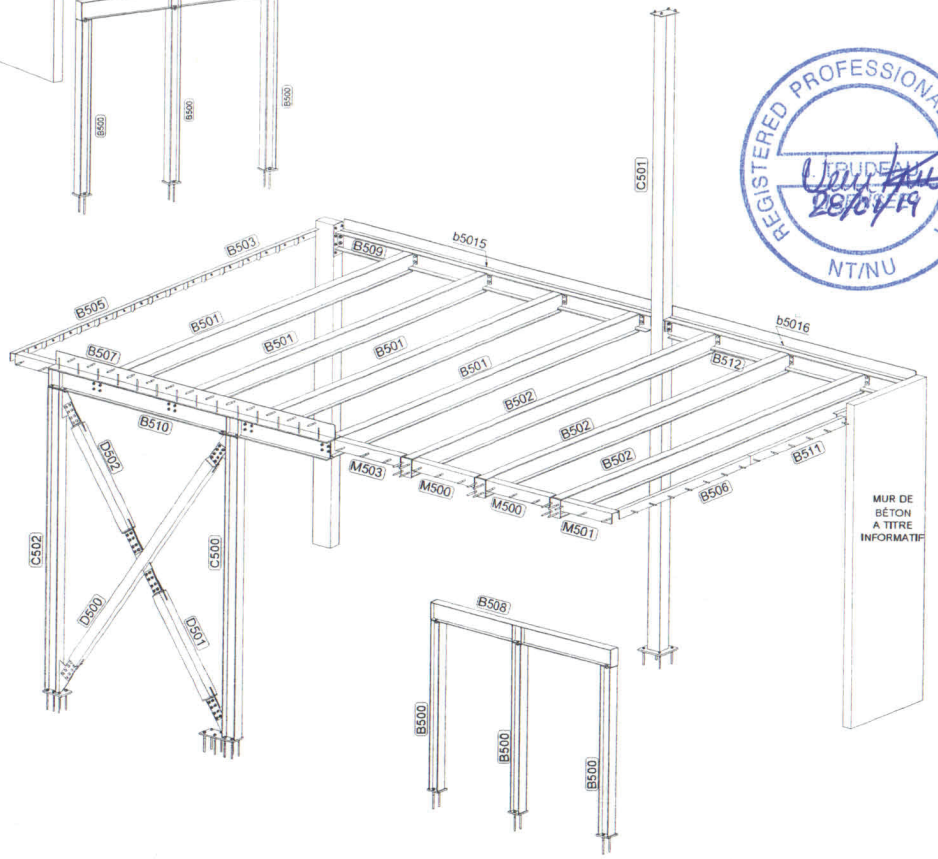

3D view

REGISTERED PROFESSIONAL ENGINEER
TRUDEAU
20/04/19
NT/NU

PROJT :

IALUIT WASTEWATER TREATMENT PLANT UPGRADE

BRIDG :
-91MMGALVANIZED METAL BRIDGE

CLOUING THE BRIDGE :
-NIP TE METAL BRIDGE WITH NAILS #24

STEEDECK :
-WELDNG TO CONFORM TO CSA-V19. PLATE WASHERS MAY BE ELIMINTED ONLY IF WELDERS OR WELDIG OPERATORS HAVE BEEN CERTIED BY THE CANADIAN WELDIG BUREAU WITH QUALIFIED PROCDURES FOR WELDING METAL DECK.

-steedeck attached to bems and joists as pe notes on floor lan S202

CERTIFICATION CWB 47.1
ALL WELDS ARE COMPLIANT WITH THE REGULATORY CODE ACCORDING TO THE CWB

Rev.	De	Par	Description
REV-4	201-01-1	Julie Lajoie	STC-001 RÉVIION 4
REV-5	201-01-2	Julie Lajoie	Révision ST-001

STRUCTURES M.H. inc.
NTREPRENEUR GÉNÉRAL
70 Av. de la Technologie, Alma G8C 1E0
Téléphone : 418 480-2186 Télécopieur : 418 668-9235
structures.mh@gmail.com
RBQ : 5612-0215-01

Date : 2018-08

INGÉNIEE :

Client :
Const. Gely

Projet :
IALUIT WASTEWATER TREATMENT PLANT UPGRADE

No. Projet
MH.2018.0839_ST

Détaillé pa
Julie Lajoie

TITRE :
NEW PLATFORM VIEW 3D

Soudure : ETRELECT
Trou : 13/16min
Acier :
Peinture :

No. Dessin :
ST-00

Sequence : REV-5

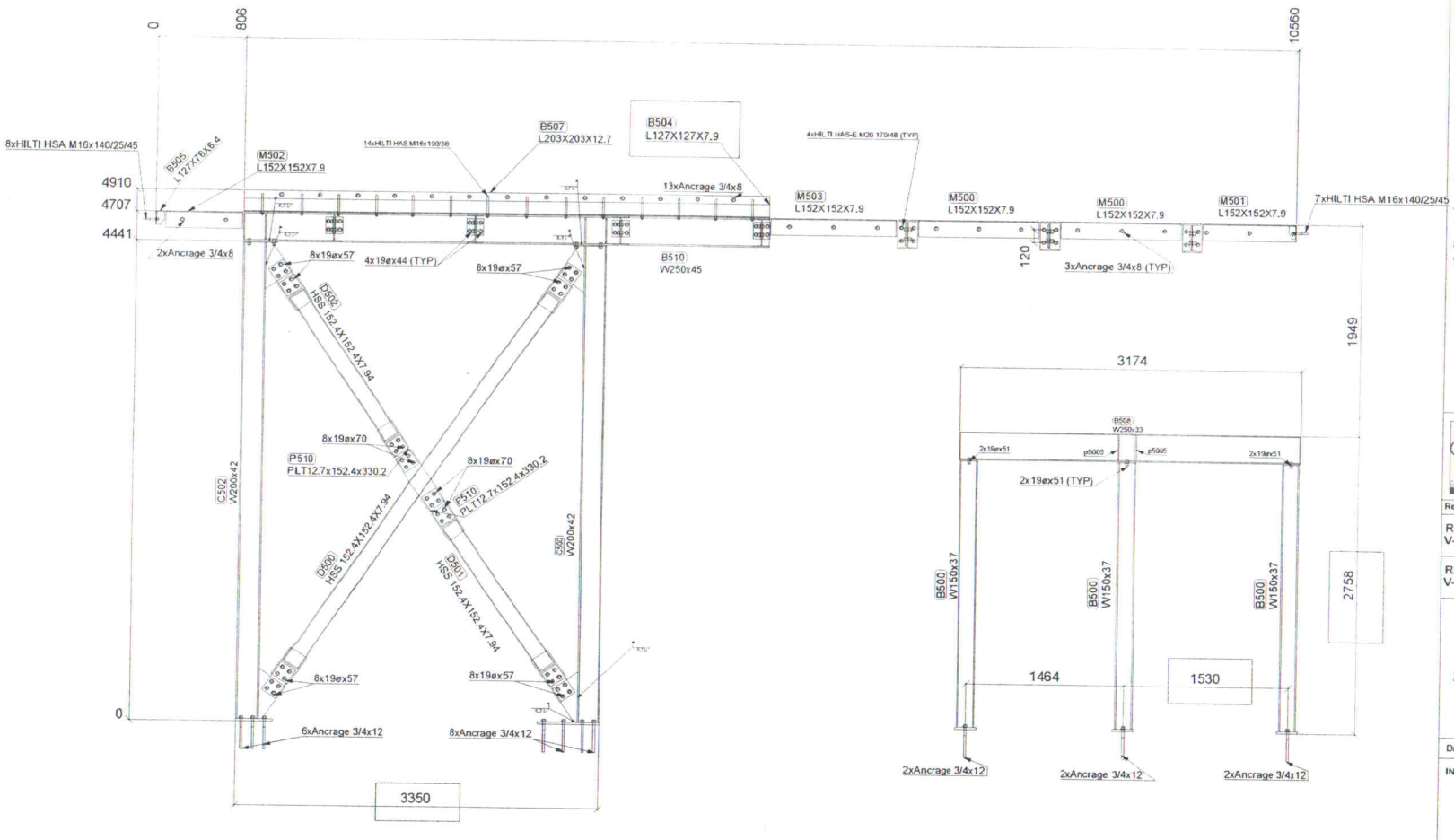

Detail view

PROJET :

IQALUIT WASTEWATER TREATMENT PLANT UPGRADE

BRIDGE :
-91MM GALVANIZED METAL BRIDGE

CLOUDING THE BRIDGE :
-NIP THE METAL BRIDGE WITH NAILS #24

STEEL DECK :
-WELDING TO CONFORM TO CSA-W59. PLATE WASHERS MAY BE ELIMINATED ONLY IF WELDERS OR WELDING OPERATORS HAVE BEEN CERTIFIED BY THE CANADIAN WELDING BUREAU WITH QUALIFIED PROCEDURES FOR WELDING METAL DECK.

-steel deck attached to beams and joists as per notes on floor plan S202

CERTIFICATIONCWB 47.1
ALL WELDS ARE COMPLIANT WITH THE REGULATORY CODE ACCORDING TO THE CWB

Rev.	Date	Par	Description
REV-4	2019-01-15	Julie Lajoie	STC-001 RÉVISION 4
REV-5	2019-01-28	Julie Lajoie	Révision ST-001

STRUCTURES M.H. inc.
ENTREPRENEUR GÉNÉRAL
1070 Av. de la Technologie, Alma GEC 1E0
Téléphone : 418 489-1186 Télécopieur : 418 668-9235
structures.mh@gmail.com
RBQ : 5612-0215-01

Date : 2018-08-08

INGÉNIEUR :

REGISTERED PROFESSIONAL ENGINEER
J. TRUDEAU
LICENSED
28/01/19
NT/NU

Client : Const. Gel

Projet : NEW PLATFORM

No. Projet : MH.2018.0839.ST

Détaillé par : Julie Lajoie

TITRE : NEW PLATFORM VIEW ELEVATION

Soudure : ETOXXELECT
Trou : 13/16"Ø sdb
Acier :
Peinture : 1 couche de peinture,Aucun Point

No. Dessin : ST-01

Sequence : REV-5

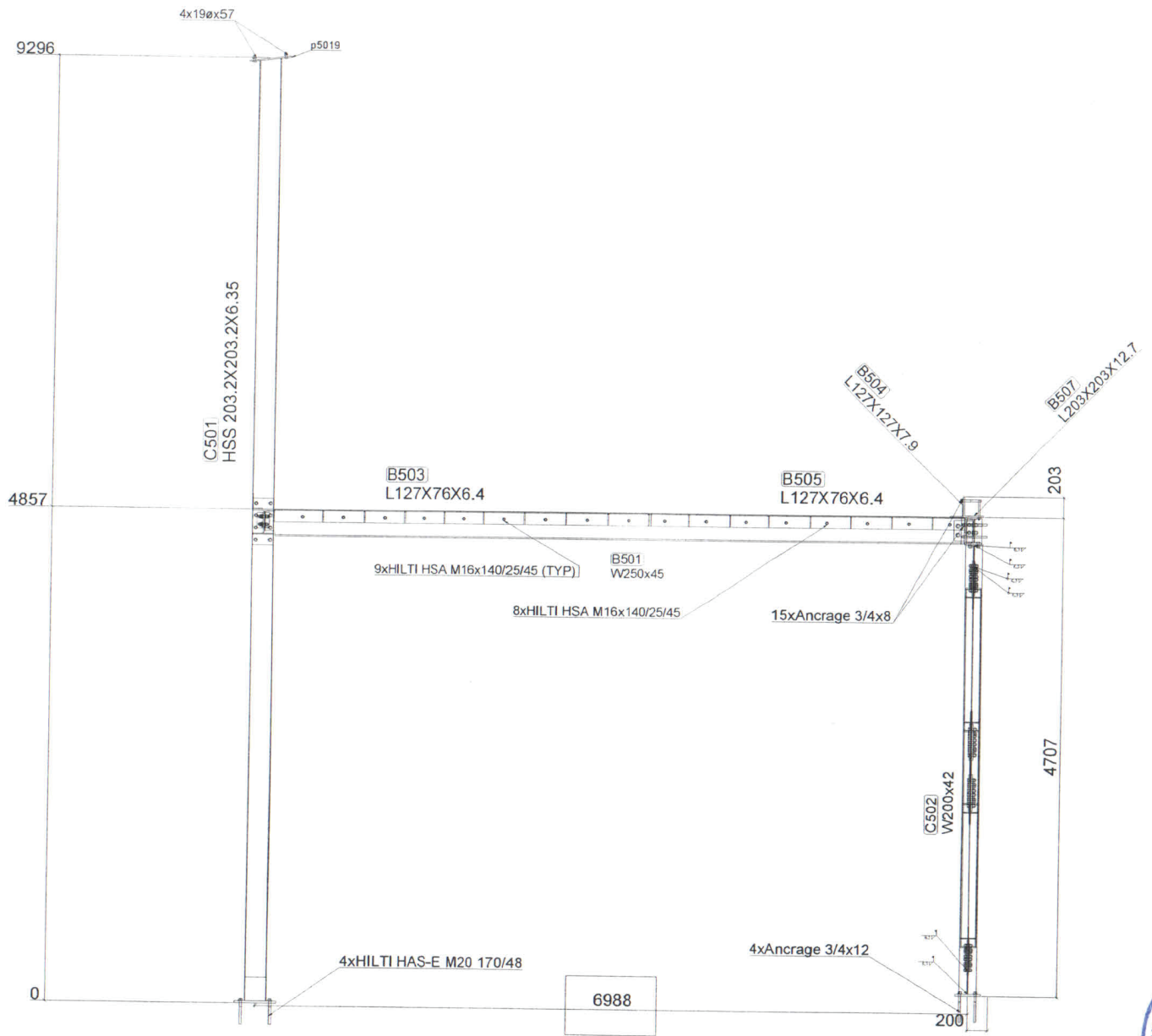

Detail view

PROJET :

IQALUIT WASTEWATER TREATMENT PLANT UPGRADE

BRIDGE :
-91MM GALVANIZED METAL BRIDGE

CLOUDING THE BRIDGE :
-NIP THE METAL BRIDGE WITH NAILS #24

STEEL DECK :
-WELDING TO CONFORM TO CSA-W59. PLATE WASHERS MAY BE ELIMINATED ONLY IF WELDERS OR WELDING OPERATORS HAVE BEEN CERTIFIED BY THE CANADIAN WELDING BUREAU WITH QUALIFIED PROCEDURES FOR WELDING METAL DECK.

-steel deck attached to beams and joists as per notes on floor plan S202

CERTIFICATION CWB 47.1
ALL WELDS ARE COMPLIANT WITH THE REGULATORY CODE ACCORDING TO THE CWB

Rev.	Date	Par	Description
REV-4	2019-01-15	Julie Lajoie	STC-001 RÉVISION 4
REV-5	2019-01-28	Julie Lajoie	Révision ST-001

STRUCTURES M.H. inc.
ENTREPRENEUR GÉNÉRAL
1570 Av. de Technologie, Alma GIC 1E0
Téléphone : 418 60-2186 Télécopieur : 418 668-9235
structures.mh@gmail.com
BQ : 5612-4215-01

Date : 2018-08-8

INGÉNIEUR :

Client : Const. Gely

Projet : NEW PLATFORM

No. Projet : M.2018.0839_ST

Détaillé par : Julie Lajoie

TITRE : NEW PLATFORM VIEW ELEVATION

Soudure : E70XXELECT
Trou : 13/16"Ø wh
Acier :
Peinture : 1 couche de peinture/coin Paint

No. Dessin : ST-03

Sequence : REV-5

REGISTERED PROFESSIONAL ENGINEER
J. TRUDEAU
LICENSEE
27/01/19
NT/NU

Marque	Quantité	Description	Longueur	Nuance	Finition	Poids	Poids total
B504	1						
b5004	1	L127X127X7.9	4880.0	300W	1 couche de peinture	162.454	162.454
	1					162.454	162.454
	1						162.454

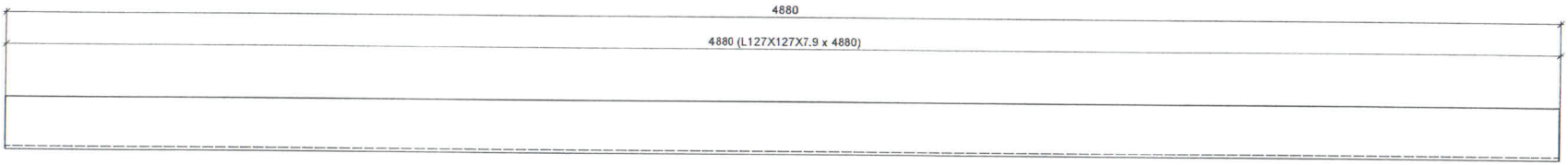

1 - B504 L127X127X7.9
Grid reference

REGISTERED PROFESSIONAL ENGINEER
NT/NU

Rev.	Date	Par	Description
REV-5	2019-01-28	Julie Lajoie	Révision ST-001
REV-4	2019-01-15	Julie Lajoie	ST-001 RÉVISION-4

Projet : NEW PLATFORM
No. Projet : MH.2018.0839_ST

Statut : Révisé
Commentaire :
Détaillé par : Julie Lajoie
Trou : 13/16"Ø u/n
Client : Const. Gely
Vérifié par: Const. Gely
Soudure : E70XXELECT
No.Dessin : B504
Acier : 300W
Peinture: 1 couche de peinture
Sequence : REV-5
Date : 2019-01-15

STRUCTURES M.H. inc. ENTREPRENEUR GÉNÉRAL

CERTIFICATION CWB 47.1
ALL WELDS ARE COMPLIANT WITH THE REGULATORY CODE ACCORDING TO THE CWB

certificationcwb CSA W47.1

Quantité	Description	Longueur	Finition

Marque	Quantité	Description	Longueur	Nuance	Finition	Poids	Poids total
B506	1	Arrêt					
b5006	1	L127X76X6.4	2933.6	300W	Peint	62.735	62.735
p5000	8	PLT9x69.8x120.7	120.7	G40.21		1.183	9.466
	9					72.201	72.201
	9						72.201

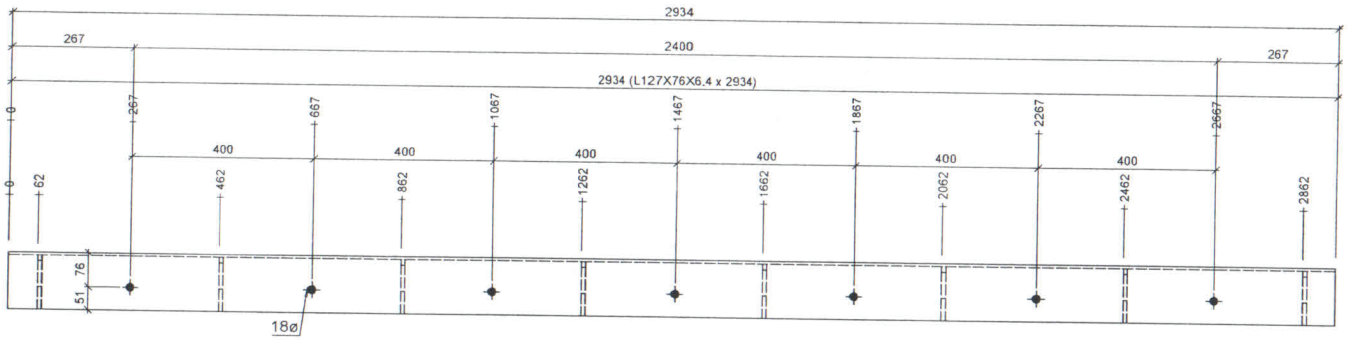

1 - B506 L127X76X6.4
Grid reference

REGISTERED PROFESSIONAL ENGINEER
NT/NU

Rev.	Date	Par	Description
REV-5	2019-01-28	Julie Lajoie	Révision ST-001

Projet : NEW PLATFORM
No. Projet : MH.2018.0839_ST

Statut : Révisé	Commentaire :	
Détaillé par : Julie Lajoie	Trou : 13/16"Ø u/n	Client : Const. Gely
Vérifié par: Const. Gely	Soudure : E70XXELECT	No. Dessin : B506
STRUCTURES M.H. inc. ENTREPRENEUR GÉNÉRAL	Acier : 300W	
	Peinture: Peint	Sequence : REV-5
	Date : 2019-01-15	

CWB certificationcwb CSA W47.1

CERTIFICATION CWB 47.1
ALL WELDS ARE
COMPLIANT WITH THE
REGULATORY CODE
ACCORDING TO THE CWB

Quantité | Description | Longueur | Finition

Marque	Quantité	Description	Longueur	Nuance	Finition	Poids	Poids total
B507	1	Poutre					
b5009	1	L203X203X12.7	4880.0	300W	1 couche de peinture	417.432	417.432
	1					417.432	417.432
	1						417.432

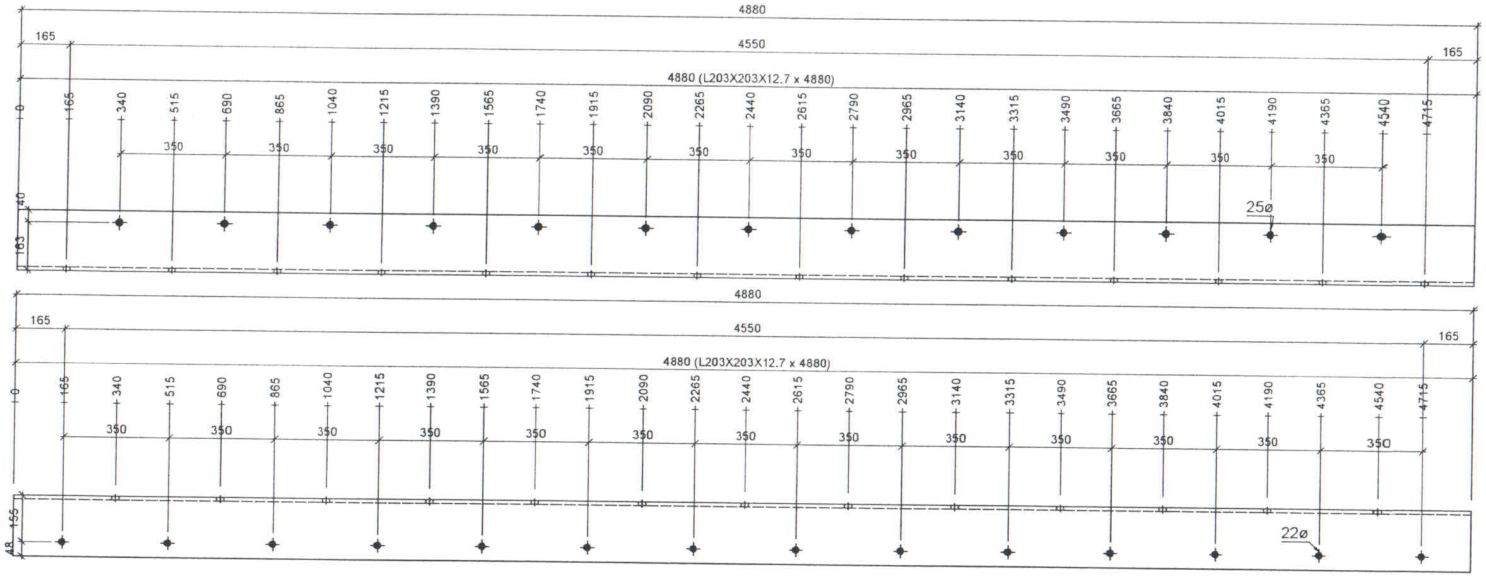

1 - B507 L203X203X12.7
Grid reference

REGISTERED PROFESSIONAL ENGINEER
NT/NU
25/01/19

REV-5	2019-01-3	Julie Lajoie	Révision ST-C01
REV-4	2019-01-5	Julie Lajoie	STC-001 RÉVISION-4
Rev.	Date	Par	Description

Projet : NEWPLATFORM
No. Projet : MH.2018839_ST

Statut : Révisé	Commentaire :	
Détaillé par : Julie Laje	Trou : 13/16"Ø u/n	Client : Const. Gely
Vérifié par: Const. Ge	Soudure : E70XXELECT	No. Dessin : B507
STRUCTURES M.H. ENTREPRENEUR GÉNÉRAL	Acier : 300W	
	Peinture : 1 couche de peinture	Sequence : REV-5
	Date : 2019-01-15	

CWB certificationcwb CSA W47.1

CERTIFICATION CWB 47.1
ALL WELDS ARE COMPLIANT WITH THE REGULATORY CODE ACCORDING TO THE CWB

Quantité | Description | Longueur | Finition

Marque	Quantité	Description	Longueur	Nuance	Finition	Poids	Poids total
C500	1	Poteau					
c5000	1	W200x42	4411.0	350W	Peint	405.515	405.515
bp5003	1	PLT20x250x565.5	565.5	G40.21		48.934	48.934
p5010	1	PLT10x178x308	308.0	G40.21		9.488	9.488
	3					463.937	463.937
	3						463.937

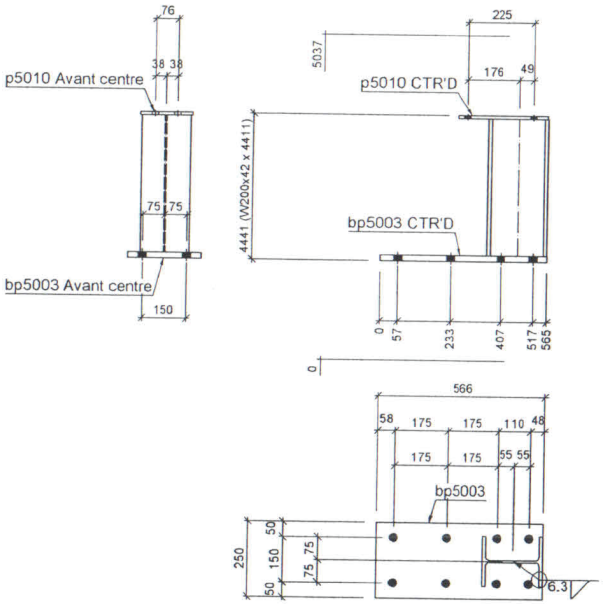

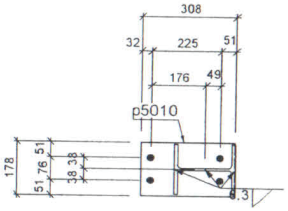

REGISTERED PROFESSIONAL ENGINEER
NT/NU
25/01/19

1 - C500 W200x42

d=205 b=166 t=12 w=7 k=24

Grid reference

CERTIFICATION CWB 47.1
ALL WELDS ARE
COMPLIANT WITH THE
REGULATORY CODE
ACCORDING TO THE CWB

certificationcwb
CSA W47.1

Rev.	Date	Par	Description
REV-5	2019-01-28	Julie Lajoie	Révision ST-001
REV-4	2019-01-15	Julie Lajoie	STC-001 RÉVISION-4

Projet : NEW PLATFORM
No. Projet : MH.2018.0839_ST

Statut : Révisé	Commentaire :		
Détaillé par : Julie Lajoie	Trou : 13/16"Ø u/n	Client : Const. Gely	
Vérifié par: Const. Gely	Soudure : E70XXELECT	No. Dessin : C500	
STRUCTURES M.H. inc. ENTREPRENEUR GÉNÉRAL	Acier : 350W		
	Peinture: Peint	Sequence : REV-5	
	Date : 2019-01-15		

Marque	Quantité	Description	Longueur	Nuance	Finition	Poids	Poids total
C502	1	Poteau					
c5000	1	W200x42	4411.0	350W	Peint	405.515	405.515
bp5001	1	PLT20x250x335.5	335.5	G40.21		29.031	29.031
p5010	1	PLT10x178x308	308.0	G40.21		9.488	9.488
	3					444.035	444.035
	3						444.035

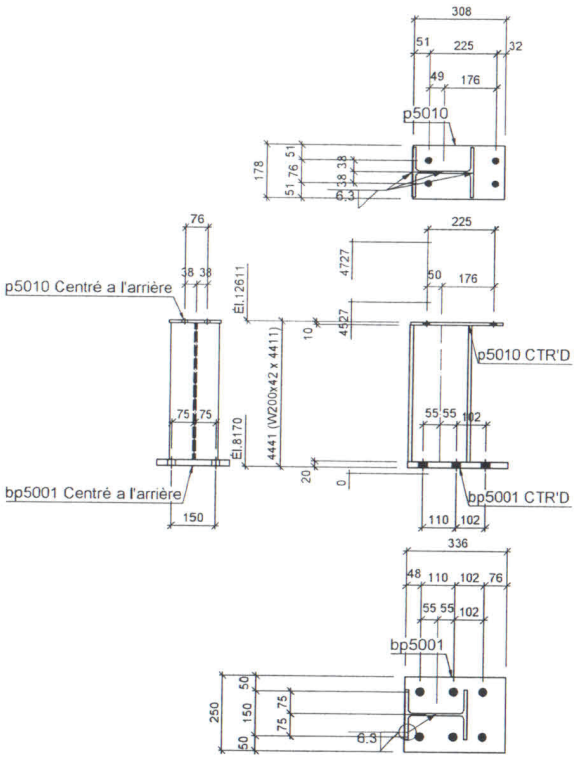

1 - C502 W200x42

d=205 | b=166 | t=12 | w=7 | k=24

Grid reference



Rev.	Date	Par	Description
REV-5	2019-01-28	Julie Lajoie	Révision ST-001
REV-4	2019-01-15	Julie Lajoie	STC-001 RÉVISION-4

Projet : NEW PLATFORM

No. Projet : MH.2018.0839_ST

Statut : Révisé	Commentaire :	
Détaillé par : Julie Lajoie	Trou : 13/16"Ø u/n	Client : Const. Gely
Vérifié par: Const. Gely	Soudure : E70XXELECT	No. Dessin : C502
STRUCTURES M.H. inc. ENTREPRENEUR GÉNÉRAL	Acier : 350W	
	Peinture: Peint	Sequence : REV-5
	Date : 2019-01-15	

CERTIFICATION CWB 47.1
ALL WELDS ARE COMPLIANT WITH THE REGULATORY CODE ACCORDING TO THE CWB

certificationcwb CSA W47.1

Quantité	Description	Longueur	Finition

Marque	Quantité	Description	Longueur	Nuance	Finition	Poids	Poids total
M500	2	Attache					
m5002	2	L152X152X7.9	1123.0	300W	Peint	45.059	90.119
	2					45.059	90.119
	2						90.119

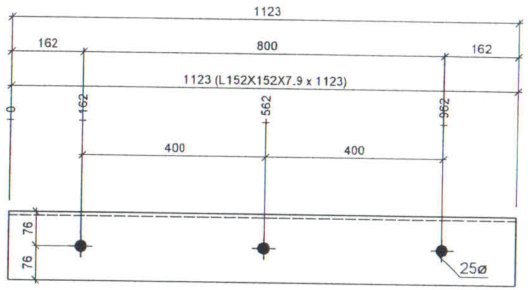

2 - M500 L152X152X7.9
Grid reference

REGISTERED PROFESSIONAL ENGINEER
NT/NU

Rev.	Date	Par	Description
REV-5	2019-01-28	Julie Lajoie	Révision ST-001
REV-4	2019-01-15	Julie Lajoie	STC-001 RÉVISION-4

Projet : NEW PLATFORM
No. Projet : MH.2018.0839_ST

Statut : Révisé	Commentaire :	
Détaillé par : Julie Lajoie	Trou : 13/16"Ø u/h	Client : Const Gely
Vérifié par: Const. Gely	Soudure : E70XXELECT	No. Dessin : M500
STRUCTURES M.H. inc. ENTREPRENEUR GÉNÉRAL	Acier : 300W	
	Peinture: Peint	Sequence : REV-5
	Date : 2019-01-15	

CERTIFICATION CWB 47.1
ALL WELDS ARE COMPLIANT WITH THE REGULATORY CODE ACCORDING TO THE CWB

certificationcwb CSA W47.1

Quantité | Description | Longueur | Finition

Marque	Quantité	Description	Longueur	Nuance	Finition	Poids	Poids total
M501	1	Attache					
m5003	1	L152X152X7.9	865.3	300W	Peint	34.719	34.719
	1					34.719	34.719
	1						34.719

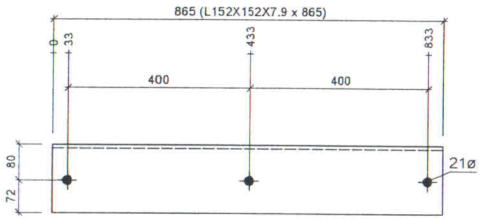

1 - M501 L152X152X7.9
Grid reference

REGISTERED PROFESSIONAL ENGINEER
NT/NU
28/01/19

CERTIFICATION CWB 47.1
ALL WELDS ARE
COMPLIANT WITH THE
REGULATORY CODE
ACCORDING TO THE CWB

certificationcwb
CSA W47.1

Rev.	Date	Par	Description
REV-5	2019-01-28	Julie Lajoie	Révision ST-001
REV-4	2019-01-15	Julie Lajoie	STC-001 RÉVISION-4

Projet : NEW PLATFORM
No. Projet : MH.2018.0839_ST

Statut : Révisé	Commentaire :	
Détaillé par : Julie Lajoie	Trou : 13/16"Ø u/n	Client : Const. Gely
Vérifié par: Const. Gely	Soudure : E70XXELECT	No. Dessin : M501
STRUCTURES M.H. inc. ENTREPRENEUR GÉNÉRAL	Acier : 300W	
	Peinture: Peint	Sequence : REV-5
	Date : 2019-01-15	

Quantité | Description | Longueur | Finition

Marque	Quantité	Description	Longueur	Nuance	Finition	Poids	Poids total
M502	1	Attache					
m5005	1	L152X152X7.9	705.9	300W	Peint	28.324	28.324
	1					28.324	28.324
	1						28.324

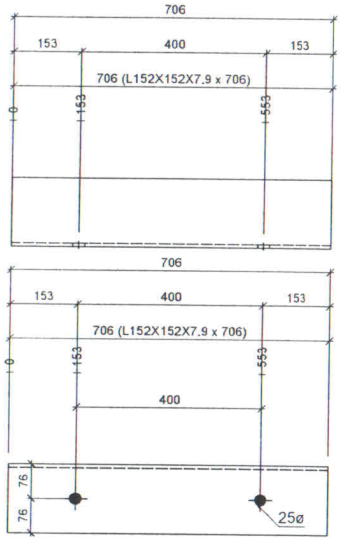

1 - M502 L152X152X7.9
Grid reference

REGISTERED PROFESSIONAL ENGINEER
NT/NU

REV-5	2019-01-28	Julie Lajoie	Révision ST-001
REV-4	2019-01-15	Julie Lajoie	STC-001 RÉVISION-4
Rev.	Date	Par	Description

Projet : NEW PLATFORM
No. Projet : M-H.2018.0839_ST

Statut : Révisé	Commentaire :	
Détaillé par : Julie Lajoie	Trou : 13/16"Ø u/n	Client : Const. Gely
Vérifié par: Const. Gely	Soudure : E70XXELECT	No. Dessin : M502
STRUCTURES M.H. inc. ENTREPRENEUR GÉNÉRAL	Acier : 300W	
	Peinture: Peint	Sequence : REV-5
	Date : 2019-01-15	

CWB certificationcwb CSA W47.1

CERTIFICATION CWB 47.1
ALL WELDS ARE
COMPLIANT WITH THE
REGULATORY CODE
ACCORDING TO THE CWB

Marque	Quantité	Description	Longueur	Nuance	Finition	Poids	Poids total
M503	1	Attache					
m5004	1	L152X152X7.9	1138.9	300W	Peint	45.697	45.697
	1					45.697	45.697
	1						45.697

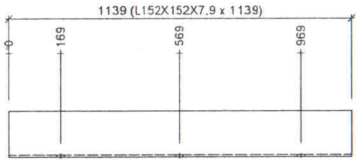

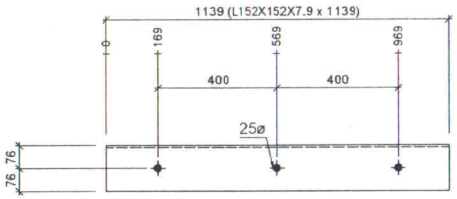

1 - M503 L152X152X7.9
Grid reference

REGISTERED PROFESSIONAL ENGINEER
28/01/19
NT/NU

CWB
certificationcwb
CSA W47.1

CERTIFICATION CWB 47.1
ALL WELDS ARE
COMPLIANT WITH THE
REGULATORY CODE
ACCORDING TO THE CWB

Rev.	Date	Par	Description
REV-5	2019-01-28	Julie Lajoie	Révision ST-001
REV-4	2019-01-15	Julie Lajoie	STC-001 RÉVISION-4

Projet : NEW PLATFORM
No. Projet : MH.2018.0839_ST

Statut : Révisé	Commentaire :		
Détaillé par : Julie Lajoie	Trou : 13/16"Ø u/n	Client : Const. Gely	
Vérifié par: Const. Gely	Soudure : E70XXELECT	No. Dessin : M503	
STRUCTURES M.H. inc. ENTREPRENEUR GÉNÉRAL	Acier : 300W		
	Peinture: Peint	Sequence : REV-5	
	Date : 2019-01-15		

Quantité | Description | Longueur | Finition

Marque	Quantité	Description	Longueur	Nuance	Finition	Poids	Poids total
P500	2	Platine d'extrémité					
p5008	2	PLT12.7x180x266	266.0	G40.21		10.524	21.047
p5011	2	PLT12.5x100x202	202.0	G40.21		4.370	8.740
	4					14.893	29.787
	4						29.787

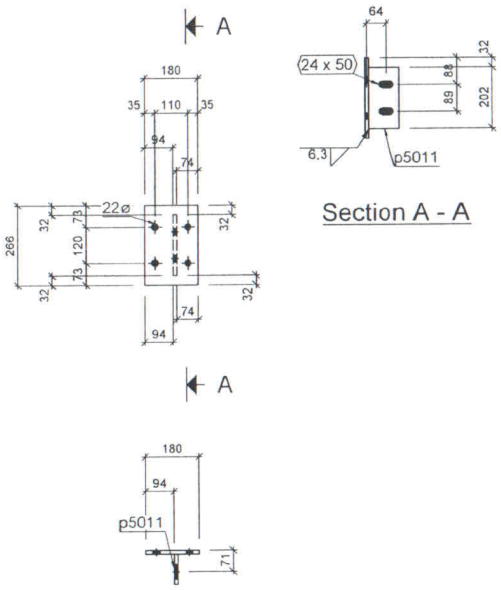

Section A - A

2 - P500 PLT12.7x180x266

REGISTERED PROFESSIONAL ENGINEER
LICENSED
28/01/19
NT/NU

Rev.	Date	Par	Description
REV-5	2019-01-28	Julie Lajoie	Révision ST-001
REV-4	2019-01-15	Julie Lajoie	STC-001 RÉVISION-4

Projet : NEW PLATFORM

No. Projet : MH.2018.0839_ST

Statut : Révisé	Commentaire :	
Détaillé par : Julie Lajoie	Trou : 13/16"Ø u/n	Client : Const. Gely
Vérifié par: Const. Gely	Soudure : E70XXELECT	No. Dessin : P500
STRUCTURES M.H. inc. ENTREPRENEUR GÉNÉRAL	Acier : G40.21	
	Peinture: Aucun	Sequence : REV-5
	Date : 2019-01-15	

CERTIFICATION CWB 47.1
ALL WELDS ARE
COMPLIANT WITH THE
REGULATORY CODE
ACCORDING TO THE CWB

certificationcwb CSA W47.1

Quantité	Description	Longueur	Finition
4	22.2ø A325	57	Galvanisé

Marque	Quantité	Description	Longueur	Nuance	Finition	Poids	Poids total
P504	1	Platine d'extrémité					
p5008	1	PLT12.7x180x266	266.0	G40.21		10.524	10.524
p5017	1	PLT12.5x100x202	202.0	G40.21		4.370	4.370
	2					14.893	14.893
	2						14.893

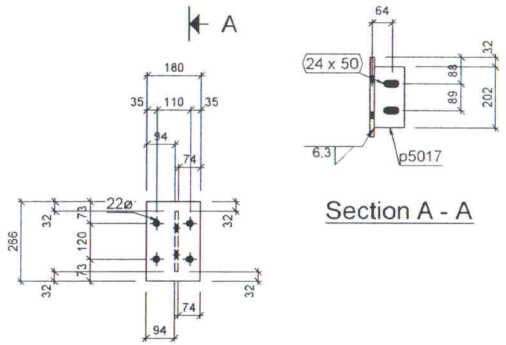

Section A - A

1 - P504 PLT12.7x180x266

REGISTERED PROFESSIONAL ENGINEER
LICENSEE
28/01/19
NT/NU

CERTIFICATION CWB 47.1
ALL WELDS ARE
COMPLIANT WITH THE
REGULATORY CODE
ACCORDING TO THE CWB

certificationcwb
CSA W47.1

Rev.	Date	Par	Description
REV-5	2019-01-28	Julie Lajoie	Révision ST-001
REV-4	2019-01-15	Julie Lajoie	STC-001 RÉVISION-4

Projet : NEW PLATFORM
No. Projet : MH.2018.0839_ST

Statut : Révisé	Commentaire :	
Détaillé par : Julie Lajoie	Trou : 13/16"Ø u/n	Client : Const. Gely
Vérifié par: Const. Gely	Soudure : E70XXELECT	No. Dessin : P504
STRUCTURES M.H. inc. ENTREPRENEUR GÉNÉRAL	Acier : G40.21	
	Peinture: Aucun	Sequence : REV-5
	Date : 2019-01-15	

Marque	Quantité	Description	Longueur	Nuance	Finition	Poids	Poids total
P505	1	Platine d'extrémité					
p5026	1	PLT12.7x203x460	460.0	G40.21		20.524	20.524
p5015	1	PLT12.5x100x192.9	192.9	G40.21		4.173	4.173
	2					24.697	24.697
	2						24.697

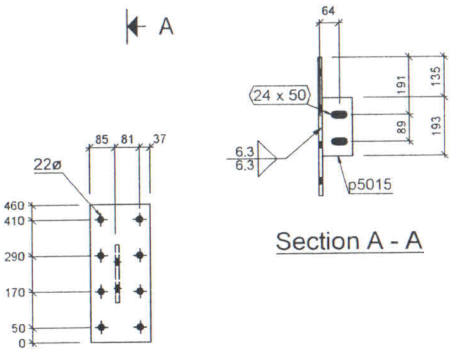

Section A - A

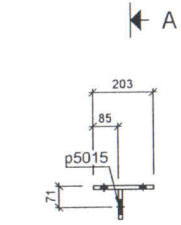

1 - P505 PLT12.7x203x460



CERTIFICATION CWB 47.1
ALL WELDS ARE
COMPLIANT WITH THE
REGULATORY CODE
ACCORDING TO THE CWB

certificationcwb
CSA W47.1

Rev.	Date	Par	Description
REV-5	2019-01-28	Julie Lajoie	Révision ST-001
REV-4	2019-01-15	Julie Lajoie	STC-001 RÉVISION-4

Projet : NEW PLATFORM
No. Projet : MH.2018.0839_ST

Statut : Révisé	Commentaire :	
Détaillé par : Julie Lajoie	Trou : 13/16"Ø u/n	Client : Const. Gely
Vérifié par: Const. Gely	Soudure : E70XXELECT	No. Dessin : P505
STRUCTURES M.H. inc. ENTREPRENEUR GÉNÉRAL	Acier : G40.21	
	Peinture: Aucun	Sequence : REV-5
	Date : 2019-01-15	

Quantité	Description	Longueur	Finition
2	22.2ø X 50	87	Galvanisé

Marque	Quantité	Description	Longueur	Nuance	Finition	Poids	Poids total
P506	1	Platine d'extrémité					
p5026	1	PLT12.7x203x460	460.0	G40.21		20.524	20.524
p5016	1	PLT12.5x100x192.9	192.9	G40.21		4.173	4.173
	2					24.697	24.697
	2						24.697

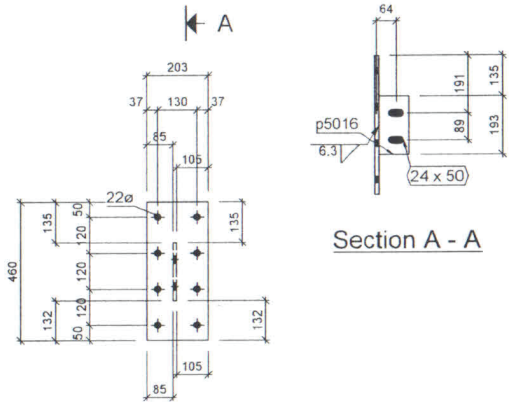

Section A - A

1 - P506 PLT12.7x203x460

REGISTERED PROFESSIONAL ENGINEER
NT/NU

CERTIFICATION CWB 47.1
ALL WELDS ARE
COMPLIANT WITH THE
REGULATORY CODE
ACCORDING TO THE CWB

certificationcwb
CSA W47.1

Rev.	Date	Par	Description
REV-5	2019-01-28	Julie Lajoie	Révision ST-001
REV-4	2019-01-15	Julie Lajoie	STC-001 RÉVISION-4

Projet : NEW PLATFORM
No. Projet : MH.2018.0839_ST

Statut : Révisé	Commentaire :	
Détaillé par : Julie Lajoie	Trou : 13/16"Ø u/n	Client : Const. Gely
Vérifié par: Const. Gely	Soudure : E70XXELECT	No. Dessin : P506
STRUCTURES M.H. inc. ENTREPRENEUR GÉNÉRAL	Acier : G40.21	
	Peinture: Aucun	Sequence : REV-5
	Date : 2019-01-15	

Marque	Quantité	Description	Longueur	Nuance	Finition	Poids	Poids total
P510	4	Plat sandwich					
p5023	4	PLT12.7x152.4x330.2	330.2	G40.21		11.060	44.241
	4					11.060	44.241
	4						44.241

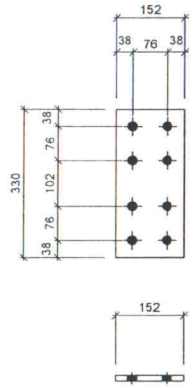

4 - P510 PLT12.7x152.4x330.2

REGISTERED PROFESSIONAL ENGINEER
LICENSED
NT/NU
28/01/19

Rev.	Date	Par	Description
REV-5	2019-01-28	Julie Lajoie	Révision ST-001
REV-4	2019-01-15	Julie Lajoie	STC-001 RÉVISION-4

Projet : NEW PLATFORM

No. Projet : MH.2018.0839_ST

Statut : Révisé	Commentaire :	
Détaillé par : Julie Lajoie	Trou : 13/16"Ø u/n	Client : Const. Gely
Vérifié par: Const. Gely	Soudure : E70XXELECT	No. Dessin : P510
STRUCTURES M.H. inc. ENTREPRENEUR GÉNÉRAL	Acier : G40.21	
	Peinture: Aucun	Sequence : REV-5
	Date : 2019-01-15	

Quantité	Description	Longueur	Finition
16	19.1ø A325	70	

CERTIFICATION CWB 47.1
ALL WELDS ARE
COMPLIANT WITH THE
REGULATORY CODE
ACCORDING TO THE CWB

certificationcwb CSA W47.1

REGISTERED PROFESSIONAL ENGINEER
NT/NU
25/01/19

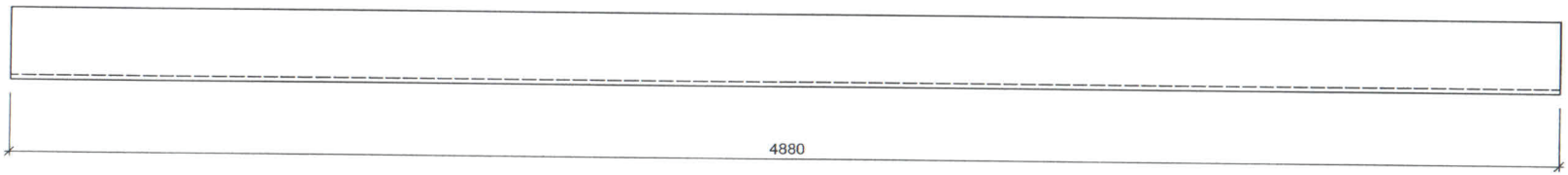

1 - b5004 L127X127X7.9 - 300W

Rev.	Date	Par	Description
REV-4	2019-01-15	Julie Lajoie	STC-001 RÉVIION 4
REV-5	2019-01-28	Julie Lajoie	Révision ST-001

Projet : NEW PLATFORM

No. Projet : MH.2018.0839_ST

Statut : Révisé

Commentaire :

Détaillé par : Julie Lajoie

Trou : 13/16"Ø u/n

Client : Const. Gely

Vérifié par: Const. Gely

Soudure : E70XXELECT

No. Dessin : b5004

STRUCTURES M.H. inc. ENTREPRENEUR GÉNÉRAL

Acier : 300W

Peinture: 1 couche de peinture

Date : 2018-08-08

Sequence : REV-5

Marque	Quantité	Description	Longueur	Nuance	Finition	Poids	Poids total
b5004	1	L127X127X7.9	4880	300W	1 couche de peinture	73.7	73.7
	1						73.7

Marque	Quantité	Dans l'assemblage
b5004	1	B504
	1	

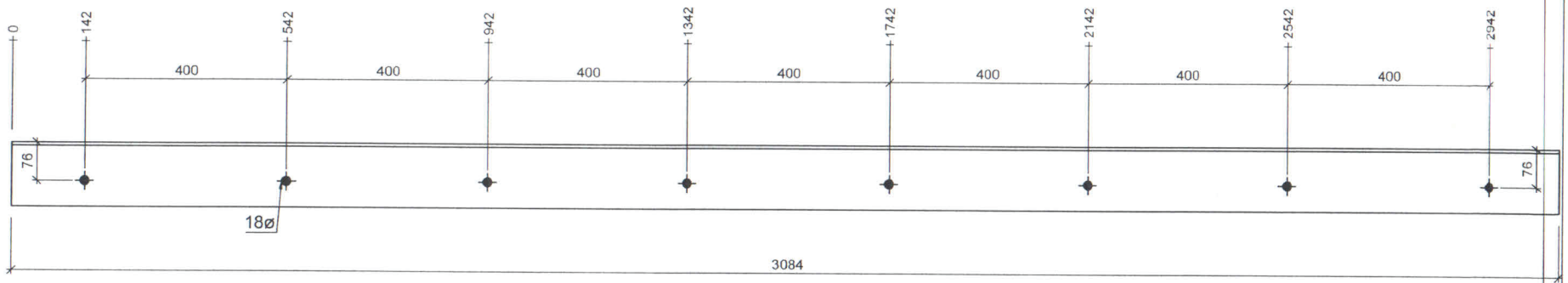

1 - b5005 L127X76X6.4 - 300W

REGISTERED PROFESSIONAL ENGINEER
NT/NU
25/01/19

Rev.	Date	Par	Description
REV-4	2019-01-15	Julie Lajoie	STC-001 RÉVIION 4
REV-5	2019-01-28	Julie Lajoie	Révision ST-001

Projet : NEW PLATFORM

No. Projet : MH.2018.0839_ST

Statut : Révisé | Commentaire :

Détaillé par : Julie Lajoie | Trou : 13/16"Ø u/n | Client : Const. Gely

Vérifié par: Const. Gely | Soudure : E70XXELECT | No. Dessin : b5005

STRUCTURES M.H. inc. ENTREPRENEUR GÉNÉRAL

Acier : 300W

Peinture: Peint | Sequence : REV-5

Date : 2018-08-08

Marque	Quantité	Description	Longueur	Nuance	Finition	Poids	Poids total
b5005	1	L127X76X6.4	3084	300W	Peint	29.9	29.9
	1						**29.9**

Marque	Quantité	Dans l'assemblage
b5005	1	B505
	1	

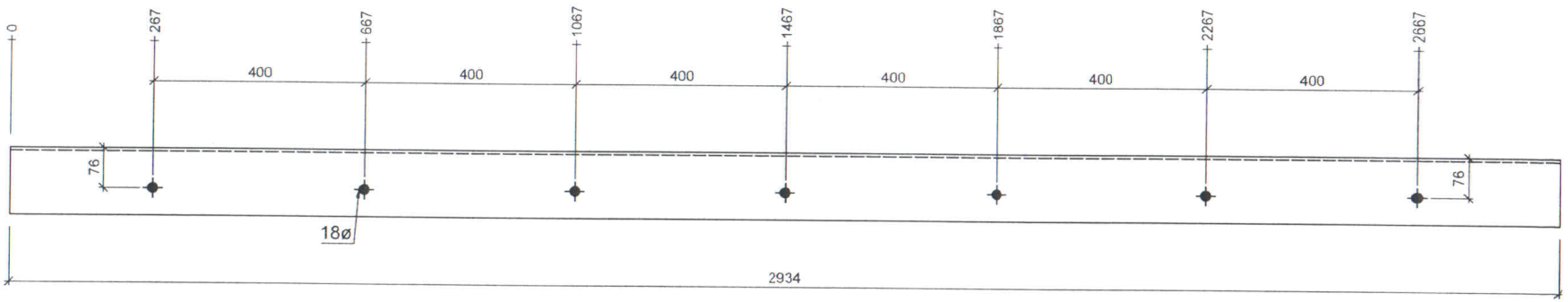

1 - b5006 L127X76X6.4 - 300W

REGISTERED PROFESSIONAL ENGINEER
NT/NU
25/01/19

Rev.	Date	Par	Description
REV-4	2019-01-15	Julie Lajoie	STC-001 RÉVIION 4
REV-5	2019-01-28	Julie Lajoie	Révision ST-001

Projet : NEW PLATFORM

No. Projet : MH.2018.0839_ST

Statut : Révisé

Commentaire :

Détaillé par : Julie Lajoie

Trou : 13/16"Ø u/n

Client : Const. Gely

Vérifié par: Const. Gely

Soudure : E70XXELECT

No. Dessin : b5006

STRUCTURES M.H. inc. ENTREPRENEUR GÉNÉRAL

Acier : 300W

Peinture: Peint

Date : 2018-08-08

Sequence : REV-5

Marque	Quantité	Description	Longueur	Nuance	Finition	Poids	Poids total
b5006	1	L127X76X6.4	2934	300W	Peint	28.5	28.5
	1						28.5

Marque	Quantité	Dans l'assemblage
b5006	1	B506
	1	

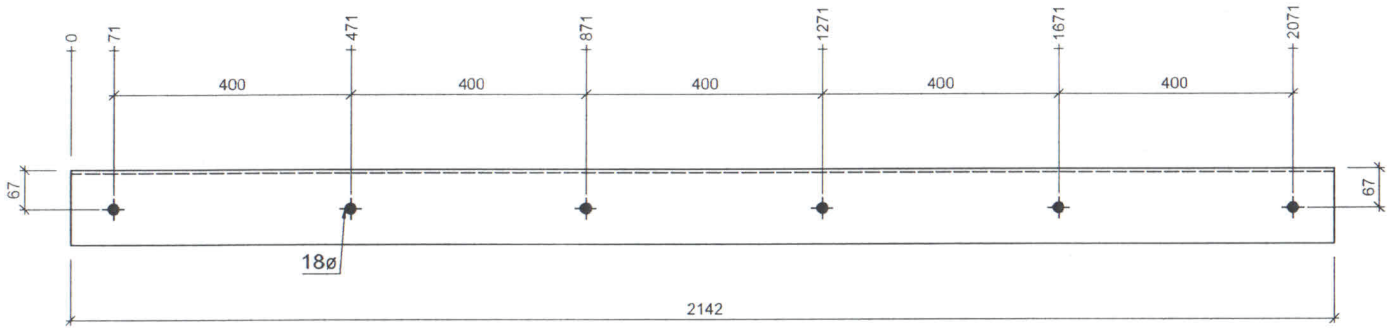

1 - b5007 L127X76X6.4 - 300W

REGISTERED PROFESSIONAL ENGINEER
NT/NU

Rev.	Date	Par	Description
REV-4	2019-01-15	Julie Lajoie	STC-001 RÉVIION 4
REV-5	2019-01-28	Julie Lajoie	Révision ST-001

Projet : NEW PLATFORM

No. Projet : MH.2018.0839_ST

Statut : Révisé	Commentaire :	
Détaillé par : Julie Lajoie	Trou : 13/16"Ø u/n	Client : Const. Gely
Vérifié par: Const. Gely	Soudure : E70XXELECT	No. Dessin : b5007
STRUCTURES M.H. inc. ENTREPRENEUR GÉNÉRAL	Acier : 300W	
	Peinture: Peint	Sequence : REV-5
	Date : 2018-08-08	

Marque	Quantité	Description	Longueur	Nuance	Finition	Poids	Poids total
b5007	1	L127X76X6.4	2142	300W	Peint	20.8	20.8
	1						20.8

Marque	Quantité	Dans l'assemblage
b5007	1	B511
	1	

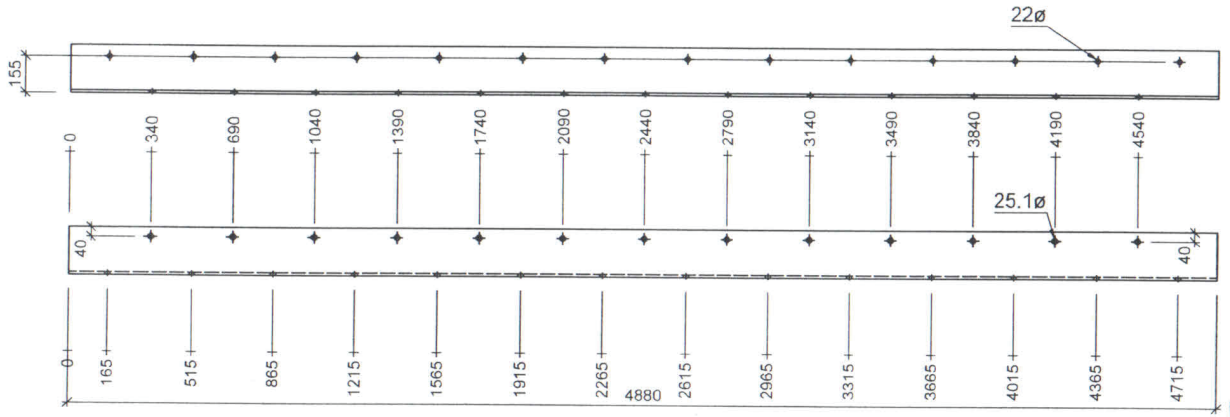

1 - b5009 L203X203X12.7 - 300W

REGISTERED PROFESSIONAL ENGINEER
LICENSED
28/01/19
NT/NU

Rev.	Date	Par	Description
REV-4	2019-01-15	Julie Lajoie	STC-001 RÉVIION 4
REV-5	2019-01-28	Julie Lajoie	Révision ST-001

Projet : NEW PLATFORM

No. Projet : MH.2018.0839_ST

Statut : Révisé

Commentaire :

Détaillé par : Julie Lajoie

Trou : 13/16"Ø u/n

Client : Const. Gely

Vérifié par: Const. Gely

Soudure : E70XXELECT

No. Dessin : b5009

STRUCTURES M.H. inc. ENTREPRENEUR GÉNÉRAL

Acier : 300W

Peinture: 1 couche de peinture

Sequence : REV-5

Date : 2018-08-08

Marque	Quantité	Description	Longueur	Nuance	Finition	Poids	Poids total
b5009	1	L203X203X12.7	4880	300W	1 couche de peinture	189.3	189.3
	1						**189.3**

Marque	Quantité	Dans l'assemblage
b5009	1	B507
	1	

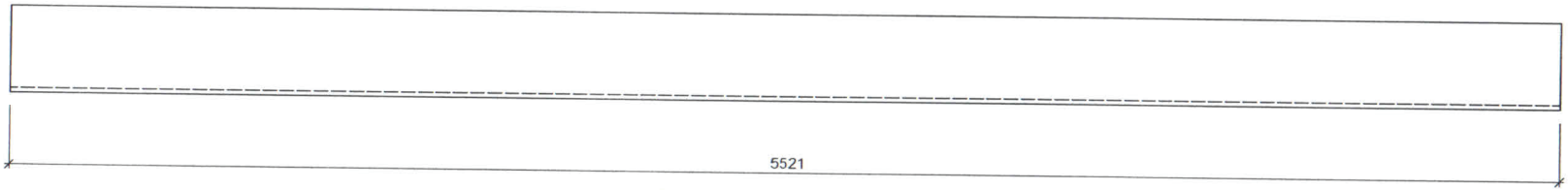

1 - b5015 L152X89X7.9 - 300W

Marque	Quantité	Description	Longueur	Nuance	Finition	Poids	Poids total
b5015	1	L152X89X7.9	5521	300W	1 couche de peinture	79.5	79.5
	1						79.5

Marque	Quantité	Dans l'assemblage
b5015	1	B509
	1	

Rev.	Date	Par	Description
REV-4	2019-01-15	Julie Lajoie	STC-001 RÉVIION 4
REV-5	2019-01-28	Julie Lajoie	Révision ST-001

Projet : NEW PLATFORM

No. Projet : MH.2018.0839_ST

Statut : Révisé

Commentaire :

Détaillé par : Julie Lajoie

Vérifié par: Const. Gely

Trou : 13/16"Ø u/n

Soudure : E70XXELECT

Acier : 300W

Peinture: 1 couche de peinture

Date : 2018-08-08

Client : Const. Gely

No. Dessin : b5015

Sequence : REV-5

STRUCTURES M.H. inc. ENTREPRENEUR GÉNÉRAL

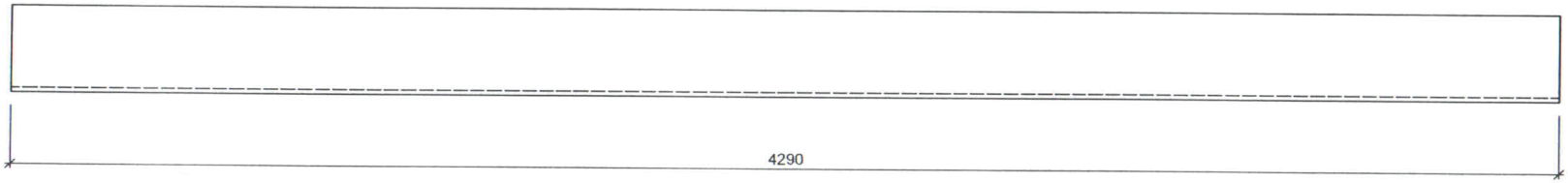

1 - b5016 L152X89X7.9 - 300W

Marque	Quantité	Description	Longueur	Nuance	Finition	Poids	Poids total
b5016	1	L152X89X7.9	4290	300W	1 couche de peinture	61.8	61.8
	1						61.8

Marque	Quantité	Dans l'assemblage
b5016	1	B512
	1	

Rev.	Date	Par	Description
REV-4	2019-01-15	Julie Lajoie	STC-001 RÉVIION 4
REV-5	2019-01-28	Julie Lajoie	Révision ST-001

Projet : NEW PLATFORM

No. Projet : MH.2018.0839_ST

Statut : Révisé

Commentaire :

Détaillé par : Julie Lajoie

Trou : 13/16"Ø u/n

Client : Const. Gely

Vérifié par: Const. Gely

Soudure : E70XXELECT

No. Dessin : b5016

STRUCTURES M.H. inc ENTREPRENEUR GÉNÉRAL

Acier : 300W

Peinture: 1 couche de peinture

Sequence :

Date : 2018-08-08

REV-5

REGISTERED PROFESSIONAL ENGINEER NT/NU 28/01/19

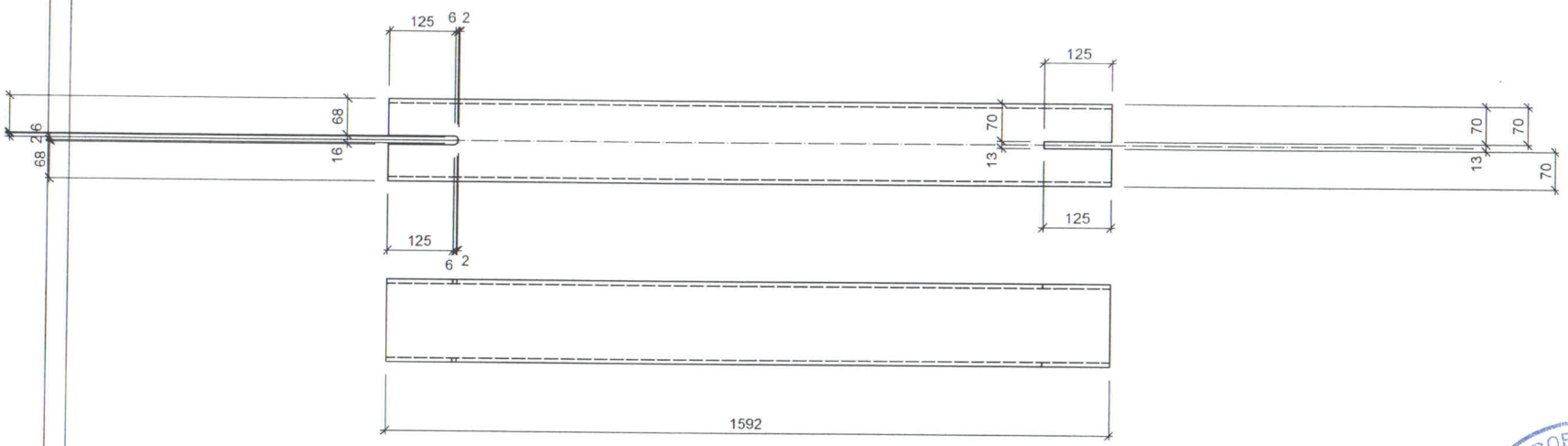

2 - d5001 HSS 152.4X152.4X7.94 - 350W-CL.C

REGISTERED PROFESSIONAL ENGINEER
NT/NU
25/01/19

Rev.	Date	Par	Description
REV-4	2019-01-15	Julie Lajoie	STC-001 RÉVISION-4
REV-5	2019-01-28	Julie Lajoie	Révision ST-001

Projet : NEW PLATFORM

No. Projet : MH.2018.0839_ST

Statut : Révisé

Commentaire :

Détaillé par : Julie Lajoie

Trou : 13/16"Ø u/n

Client : Const. Gely

Vérifié par: Const. Gely

Soudure : E70XXELECT

No. Dessin : d5001

STRUCTURES M.H. inc. ENTREPRENEUR GÉNÉRAL

Acier : 350W-CL.C

Peinture: Peint

Date : 2019-01-15

Sequence : REV-5

Marque	Quantité	Description	Longueur	Nuance	Finition	Poids	Poids total
d5001	2	HSS 152.4X152.4X7.94	1592	350W-CL.C	Peint	55.1	110.2
	2						110.2

Marque	Quantité	Dans l'assemblage
d5001	1	D501
d5001	1	D502
	2	

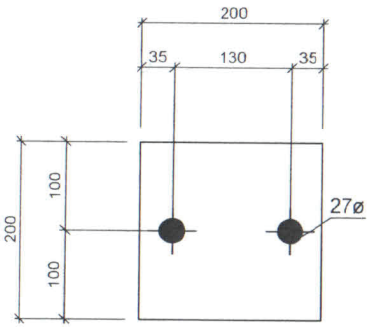

3 - bp5000 PLT20x200x200 - G40.21

Marque	Quantité	Description	Longueur	Nuance	Finition	Poids	Poids total
bp5000	3	PLT20x200x200	200	G40.21		6.3	18.8
	3						18.8

Marque	Quantité	Dans l'assemblage
bp5000	3	B500
	3	

REGISTERED PROFESSIONAL ENGINEER
NT/NU

Rev.	Date	Par	Description
REV-4	2019-01-15	Julie Lajoie	STC-001 RÉVIION 4
REV-5	2019-01-28	Julie Lajoie	Révision ST-001

Projet : NEW PLATFORM

No. Projet : MH.2018.0839_ST

Statut : Révisé

Commentaire :

Détaillé par : Julie Lajoie

Trou : 13/16"Ø u/n

Client : Const. Gely

Vérifié par: Const. Gely

Soudure : E70XXELECT

No. Dessin : bp5000

STRUCTURES M.H. inc. ENTREPRENEUR GÉNÉRAL

Acier : G40.21

Peinture: Aucun

Date : 2018-08-08

Sequence : REV-5

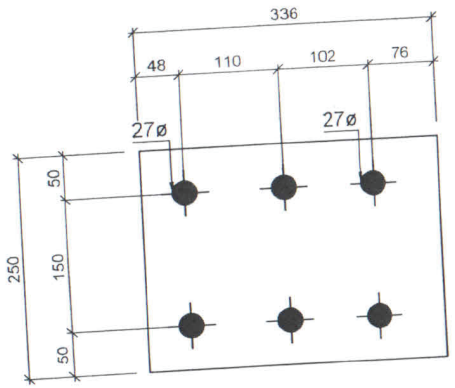

1 - bp5001 PLT20x250x335.5 - G40.21

REGISTERED PROFESSIONAL ENGINEER
NT/NU

Rev.	Date	Par	Description
REV-4	2019-01-15	Julie Lajoie	STC-001 RÉVIION 4
REV-5	2019-01-28	Julie Lajoie	Révision ST-001

Projet : NEW PLATFORM

No. Projet : MH.2018.0839_ST

Statut : Révisé

Commentaire :

Détaillé par : Julie Lajoie

Trou : 13/16"Ø u/n

Client : Const. Gely

Vérifié par: Const. Gely

Soudure : E70XXELECT

No. Dessin : bp5001

STRUCTURES M.H. inc. ENTREPRENEUR GÉNÉRAL

Acier : G40.21

Peinture: Aucun

Sequence : REV-5

Date : 2018-08-08

Marque	Quantité	Description	Longueur	Nuance	Finition	Poids	Poids total
bp5001	1	PLT20x250x335.5	336	G40.21		13.2	13.2
	1						**13.2**

Marque	Quantité	Dans l'assemblage
bp5001	1	C502
	1	

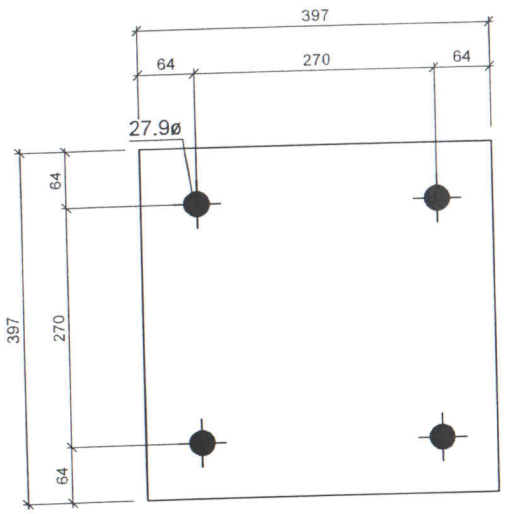

1 - bp5002 PLT20x397.2x397.2 - G40.21

REGISTERED PROFESSIONAL ENGINEER
NT/NU

Rev.	Date	Par	Description
REV-4	2019-01-15	Julie Lajoie	STC-001 RÉVIION 4
REV-5	2019-01-28	Julie Lajoie	Révision ST-001

Projet : NEW PLATFORM

No. Projet : MH.2018.0839_ST

Statut : Révisé	Commentaire :	
Détaillé par : Julie Lajoie	Trou : 13/16"Ø u/n	Client : Const. Gely
Vérifié par: Const. Gely	Soudure : E70XXELECT	No. Dessin : bp5002
STRUCTURES M.H. inc. ENTREPRENEUR GÉNÉRAL	Acier : G40.21	
	Peinture: Aucun	Sequence : REV-5
	Date : 2018-08-08	

Marque	Quantité	Description	Longueur	Nuance	Finition	Poids	Poids total
bp5002	1	PLT20x397.2x397.2	397	G40.21		24.8	24.8
	1						24.8

Marque	Quantité	Dans l'assemblage
bp5002	1	C501
	1	

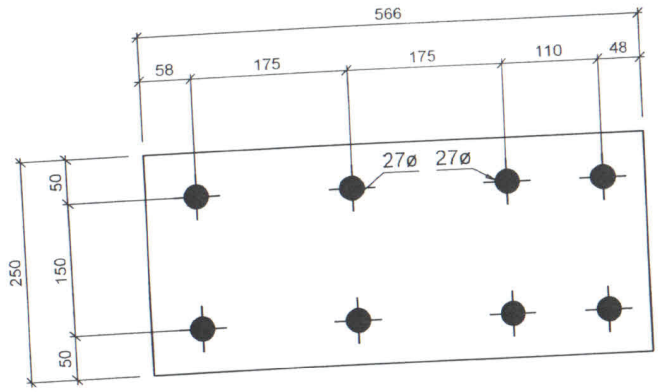

1 - bp5003 PLT20x250x565.5 - G40.21

REGISTERED PROFESSIONAL ENGINEER
NT/NU
28/01/19

Rev.	Date	Par	Description
REV-4	2019-01-15	Julie Lajoie	STC-001 RÉVIION 4
REV-5	2019-01-28	Julie Lajoie	Révision ST-001

Projet : NEW PLATFORM

No. Projet : MH.2018.0839_ST

Statut : Révisé	Commentaire :	
Détaillé par : Julie Lajoie	Trou : 13/16"Ø u/n	Client : Const. Gely
Vérifié par: Const. Gely	Soudure : E70XXELECT	No. Dessin : bp5003
STRUCTURES M.H. inc. ENTREPRENEUR GÉNÉRAL	Acier : G40.21	
	Peinture: Aucun	Sequence : REV-5
	Date : 2018-08-08	

Marque	Quantité	Description	Longueur	Nuance	Finition	Poids	Poids total
bp5003	1	PLT20x250x565.5	566	G40.21		22.2	22.2
	1						**22.2**

Marque	Quantité	Dans l'assemblage
bp5003	1	C500
	1	

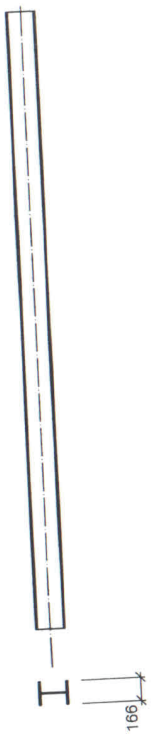

2 - c5000 W200x42 - 350W

REGISTERED PROFESSIONAL ENGINEER
NT/NU

Rev.	Date	Par	Description
REV-4	2019-01-15	Julie Lajoie	STC-001 RÉVIION 4
REV-5	2019-01-28	Julie Lajoie	Révision ST-001

Projet : NEW PLATFORM

No. Projet : MH.2018.0839_ST

Statut : Révisé	Commentaire :		
Détaillé par : Julie Lajoie	Trou : 13/16"Ø u/n	Client : Const. Gely	
Vérifié par: Const. Gely	Soudure : E70XXELECT	No. Dessin : c5000	
STRUCTURES M.H. inc. ENTREPRENEUR GÉNÉRAL	Acier : 350W		
	Peinture: Peint	Sequence :	REV-5
	Date : 2018-08-08		

Marque	Quantité	Description	Longueur	Nuance	Finition	Poids	Poids total
c5000	2	W200x42	4411	350W	Peint	183.9	367.9
	2						**367.9**

Marque	Quantité	Dans l'assemblage
c5000	1	C500
c5000	1	C502
	2	

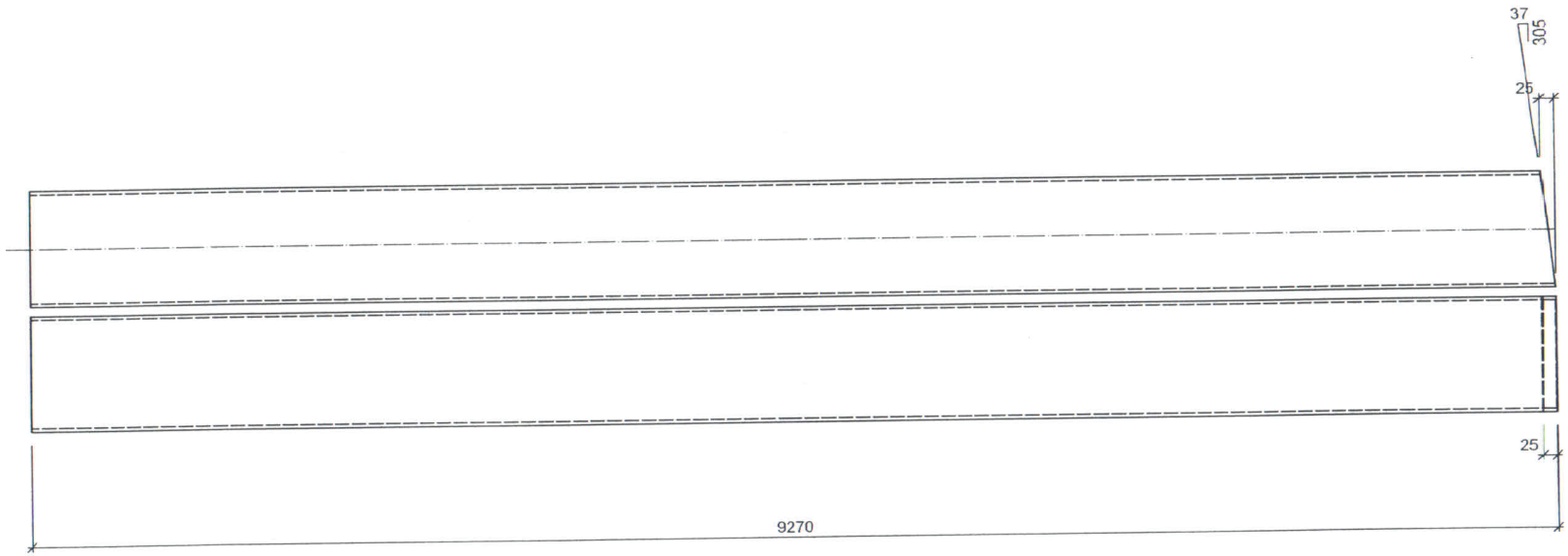

1 - c5001 HSS 203.2X203.2X6.35 - 350W-CL.C

Marque	Quantité	Description	Longueur	Nuance	Finition	Poids	Poids total
c5001	1	HSS 203.2X203.2X6.35	9270	350W-CL.C	Peint	358.8	358.8
	1						358.8

Marque	Quantité	Dans l'assemblage
c5001	1	C501
	1	

REGISTERED PROFESSIONAL ENGINEER
NT/NU

Rev.	Date	Par	Description
REV-4	2019-01-15	Julie Lajoie	STC-001 RÉVISION-4
REV-5	2019-01-28	Julie Lajoie	Révision ST-001

Projet : NEW PLATFORM

No. Projet : MH.2018.0839_ST

Statut : Révisé

Commentaire :

Détaillé par : Julie Lajoie

Trou : 13/16"Ø u/n

Client : Const. Gely

Vérifié par: Const. Gely

Soudure : E70XXELECT

No. Dessin : c5001

STRUCTURES M.H. inc. ENTREPRENEUR GÉNÉRAL

Acier : 350W-CL.C

Peinture: Peint

Sequence : REV-5

Date : 2019-01-15

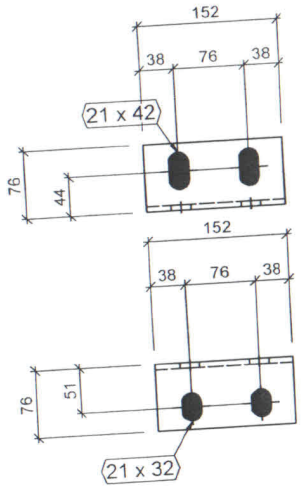

8 - m5000 L76X76X6.4 - G40.21

Marque	Quantité	Description	Longueur	Nuance	Finition	Poids	Poids total
m5000	8	L76X76X6.4	152	G40.21		1.1	8.8
	8						**8.8**

Marque	Quantité	Dans l'assemblage
m5000	8	B501
	8	

REGISTERED PROFESSIONAL ENGINEER
25/01/19
NT/NU

Rev.	Date	Par	Description
REV-4	2019-01-15	Julie Lajoie	STC-001 RÉVISION-4
REV-5	2019-01-28	Julie Lajoie	Révision ST-001

Projet : NEW PLATFORM

No. Projet : MH.2018.0839_ST

Statut : Révisé

Commentaire :

Détaillé par : Julie Lajoie

Trou : 13/16"Ø u/n

Client : Const. Gely

Vérifié par: Const. Gely

Soudure : E70XXELECT

No. Dessin : m5000

STRUCTURES M.H. inc. ENTREPRENEUR GÉNÉRAL

Acier : G40.21

Peinture: Aucun

Date : 2019-01-15

Sequence : REV-5

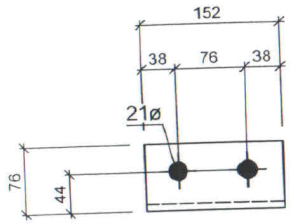

4 - m5001 L3X2X5/16 - G40.21

REGISTERED PROFESSIONAL ENGINEER
NT/NU
2019/07/19

Rev.	Date	Par	Description
REV-4	2019-01-15	Julie Lajoie	STC-001 RÉVISION-4
REV-5	2019-01-28	Julie Lajoie	Révision ST-001

Projet : NEW PLATFORM

No. Projet : MH.2018.0839_ST

Statut : Révisé

Commentaire :

Détaillé par : Julie Lajoie

Trou : 13/16"Ø u/n

Client : Const. Gely

Vérifié par: Const. Gely

Soudure : E70XXELECT

No. Dessin : m5001

STRUCTURES M.H. inc. ENTREPRENEUR GÉNÉRAL

Acier : G40.21

Peinture: Aucun

Date : 2019-01-15

Sequence : REV-5

Marque	Quantité	Description	Longueur	Nuance	Finition	Poids	Poids total
m5001	4	L3X2X5/16	152	G40.21		1.1	4.5
	4						4.5

Marque	Quantité	Dans l'assemblage
m5001	4	C501
	4	

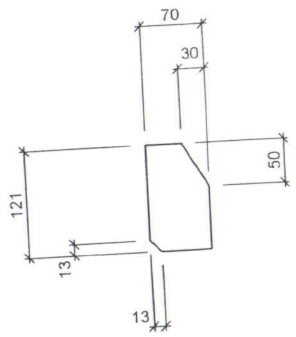

32 - p5000 PLT9x69.8x120.7 - G40.21

REGISTERED PROFESSIONAL ENGINEER
NT/NU
25/09/19

Marque	Quantité	Description	Longueur	Nuance	Finition	Poids	Poids total
p5000	32	PLT9x69.8x120.7	121	G40.21		0.5	17.2
	32						**17.2**

Marque	Quantité	Dans l'assemblage
p5000	9	B503
p5000	7	B505
p5000	8	B506
p5000	8	B511
	32	

Rev.	Date	Par	Description
REV-4	2019-01-15	Julie Lajoie	STC-001 RÉVISION-4
REV-5	2019-01-28	Julie Lajoie	Révision ST-001

Projet : NEW PLATFORM

No. Projet : MH.2018.0839_ST

Statut : Révisé

Commentaire :

Détaillé par : Julie Lajoie

Trou : 13/16"Ø u/n

Client : Const. Gely

Vérifié par: Const. Gely

Soudure : E70XXELCT

No. Dessin : p5000

STRUCTURES M.H. inc. ENTREPRENEUR GÉNÉRAL

Acier : G40.21

Peinture: Aucun

Date : 2019-01-15

Sequence : REV-5

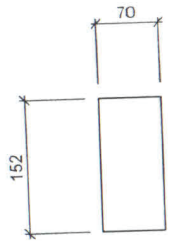

12 - p5001 PLT12.7x69.8x152.4 - G40.21

REGISTERED PROFESSIONAL ENGINEER
NT/NU

Marque	Quantité	Description	Longueur	Nuance	Finition	Poids	Poids total
p5001	12	PLT12.7x69.9x152.4	152	G40.21		1.1	12.7
	12						**12.7**

Marque	Quantité	Dans l'assemblage
p5001	4	D500
p5001	4	D501
p5001	4	D502
	12	

Rev.	Date	Par	Description
REV-4	2019-01-15	Julie Lajoie	STC-001 RÉVISION-4
REV-5	2019-01-28	Julie Lajoie	Révision ST-001

Projet : NEW PLATFORM

No. Projet : MH.2018.0839_ST

Statut : Révisé

Commentaire :

Détaillé par : Julie Lajoie

Trou : 13/16"Ø u/n

Client : Const. Gely

Vérifié par: Const. Gely

Soudure : E70XXELECT

No. Dessin : p5001

STRUCTURES M.H. inc. ENTREPRENEUR GÉNÉRAL

Acier : G40.21

Peinture: Aucun

Date : 2019-01-15

Sequence : REV-5

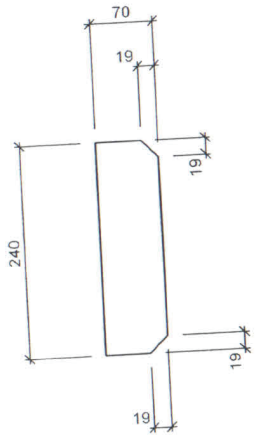

8 - p5003 PLT9.5x70.2x240 - G40.21

REGISTERED PROFESSIONAL ENGINEER
NTNU
25/01/19

Rev.	Date	Par	Description
REV-4	2019-01-15	Julie Lajoie	STC-001 RÉVISION-4
REV-5	2019-01-28	Julie Lajoie	Révision ST-001

Projet : NEW PLATFORM

No. Projet : MH.2018.0839_ST

Statut : Révisé

Commentaire :

Détaillé par : Julie Lajoie

Trou : 13/16"Ø u/n

Client : Const. Gely

Vérifié par: Const. Gely

Soudure : E70XXELECT

No. Dessin : p5003

STRUCTURES M.H. inc. ENTREPRENEUR GÉNÉRAL

Acier : G40.21

Peinture: Aucun

Date : 2019-01-15

Sequence : REV-5

Marque	Quantité	Description	Longueur	Nuance	Finition	Poids	Poids total
p5003	8	PLT9.5x70.2x240	240	G40.21		1.2	9.9
	8						**9.9**

Marque	Quantité	Dans l'assemblage
p5003	8	B510
	8	

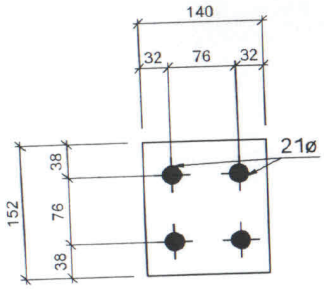

7 - p5004 PLT10x140x152.4 - G40.21

REGISTERED PROFESSIONAL ENGINEER
NT/NU

Rev.	Date	Par	Description
REV-4	2019-01-15	Julie Lajoie	STC-001 RÉVISION-4
REV-5	2019-01-28	Julie Lajoie	Révision ST-001

Projet : NEW PLATFORM

No. Projet : MH.2018.0839_ST

Statut : Révisé

Commentaire :

Détaillé par : Julie Lajoie

Trou : 13/16"Ø u/n

Client : Const. Gely

Vérifié par: Const. Gely

Soudure : E70XXELECT

No. Dessin : p5004

STRUCTURES M.H. inc. ENTREPRENEUR GÉNÉRAL

Acier : G40.21

Peinture: Aucun

Date : 2019-01-15

Séquence : REV-5

Marque	Quantité	Description	Longueur	Nuance	Finition	Poids	Poids total
p5004	7	PLT10x140x152.4	152	G40.21		1.7	11.7
	7						11.7

Marque	Quantité	Dans l'assemblage
p5004	4	B501
p5004	3	B502
	7	

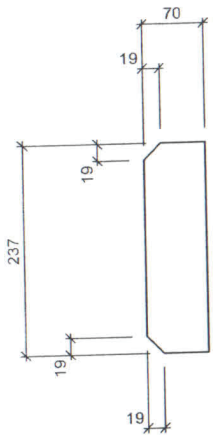

4 - p5005 PLT10x69.8x236.6 - G40.21

Marque	Quantité	Description	Longueur	Nuance	Finition	Poids	Poids total
p5005	4	PLT10x69.8x236.6	237	G40.21		1.3	5.1
	4						**5.1**

Marque	Quantité	Dans l'assemblage
p5005	4	B508
	4	

REGISTERED PROFESSIONAL ENGINEER
TRUDEAU
LICENSED
28/01/19
NT/NU

Rev.	Date	Par	Description
REV-4	2019-01-15	Julie Lajoie	STC-001 RÉVISION-4
REV-5	2019-01-28	Julie Lajoie	Révision ST-001

Projet : NEW PLATFORM

No. Projet : MH.2018.0839_ST

Statut : Révisé

Commentaire :

Détaillé par : Julie Lajoie

Trou : 13/16"Ø u/n

Client : Const. Gely

Vérifié par: Const. Gely

Soudure : E70XXELECT

No. Dessin : p5005

STRUCTURES M.H. inc. ENTREPRENEUR GÉNÉRAL

Acier : G40.21

Peinture: Aucun

Date : 2019-01-15

Sequence : REV-5

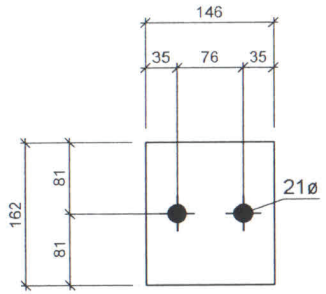

3 - p5007 PLT10x146x162 - G40.21

REGISTERED PROFESSIONAL ENGINEER
NT/NU

Rev.	Date	Par	Description
REV-4	2019-01-15	Julie Lajoie	STC-001 RÉVISION-4
REV-5	2019-01-28	Julie Lajoie	Révision ST-001

Projet : NEW PLATFORM

No. Projet : MH.2018.0839_ST

Statut : Révisé

Commentaire :

Détaillé par : Julie Lajoie

Trou : 13/16"Ø u/n

Client : Const. Gely

Vérifié par: Const. Gely

Soudure : E70XXELECT

No. Dessin : p5007

STRUCTURES M.H. inc. ENTREPRENEUR GÉNÉRAL

Acier : G40.21

Peinture: Aucun

Date : 2019-01-15

Sequence : REV-5

Marque	Quantité	Description	Longueur	Nuance	Finition	Poids	Poids total
p5007	3	PLT10x146x162	162	G40.21		1.9	5.6
	3						5.6

Marque	Quantité	Dans l'assemblage
p5007	3	B500
	3	

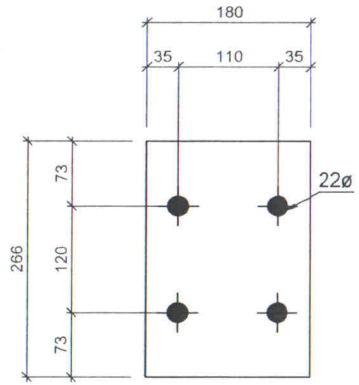

3 - p5008 PLT12.7x180x266 - G40.21

Marque	Quantité	Description	Longueur	Nuance	Finition	Poids	Poids total
p5008	3	PLT12.7x180x266	266	G40.21		4.8	14.3
	3						**14.3**

Marque	Quantité	Dans l'assemblage
p5008	2	P500
p5008	1	P504
	3	

REGISTERED PROFESSIONAL ENGINEER
NT/NU
25/01/19

Rev.	Date	Par	Description
REV-4	2019-01-15	Julie Lajoie	STC-001 RÉVISION-4
REV-5	2019-01-28	Julie Lajoie	Révision ST-001

Projet : NEW PLATFORM

No. Projet : MH.2018.0839_ST

Statut : Révisé

Commentaire :

Détaillé par : Julie Lajoie

Trou : 13/16"Ø u/n

Client : Const. Gely

Vérifié par: Const. Gely

Soudure : E70XXELECT

No. Dessin : p5008

STRUCTURES M.H. inc. ENTREPRENEUR GÉNÉRAL

Acier : G40.21

Peinture: Aucun

Date : 2019-01-15

Sequence : REV-5

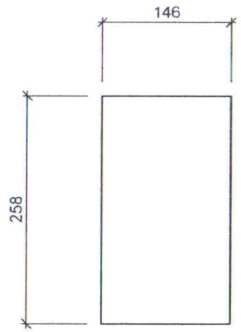

2 - p5009 PLT10x146x258 - G40.21

Marque	Quantité	Description	Longueur	Nuance	Finition	Poids	Poids total
p5009	2	PLT10x146x258	258	G40.21		3.0	5.9
	2						**5.9**

Marque	Quantité	Dans l'assemblage
p5009	2	B508
	2	

REGISTERED PROFESSIONAL ENGINEER
NT/NU

Rev.	Date	Par	Description
REV-4	2019-01-15	Julie Lajoie	STC-001 RÉVISION-4
REV-5	2019-01-28	Julie Lajoie	Révision ST-001

Projet : NEW PLATFORM

No. Projet : MH.2018.0839_ST

Statut : Révisé

Commentaire :

Détaillé par : Julie Lajoie

Trou : 13/16"Ø u/n

Client : Const. Gely

Vérifié par: Const. Gely

Soudure : E70XXELECT

No. Dessin : p5009

STRUCTURES M.H. inc. ENTREPRENEUR GÉNÉRAL

Acier : G40.21

Peinture: Aucun

Date : 2019-01-15

Sequence : REV-5

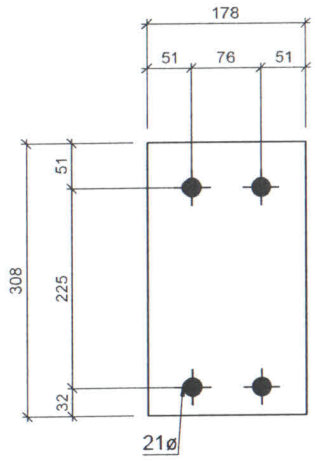

2 - p5010 PLT10x178x308 - G40.21

REGISTERED PROFESSIONAL ENGINEER
NT/NU

Rev.	Date	Par	Description
REV-4	2019-01-15	Julie Lajoie	STC-001 RÉVISION-4
REV-5	2019-01-28	Julie Lajoie	Révision ST-001

Projet : NEW PLATFORM

No. Projet : MH.2018.0839_ST

Statut : Révisé

Commentaire :

Détaillé par : Julie Lajoie

Trou : 13/16"Ø u/n

Client : Const. Gely

Vérifié par: Const. Gely

Soudure : E70XXELECT

No. Dessin : p5010

STRUCTURES M.H. inc. ENTREPRENEUR GÉNÉRAL

Acier : G40.21

Peinture: Aucun

Sequence : REV-5

Date : 2019-01-15

Marque	Quantité	Description	Longueur	Nuance	Finition	Poids	Poids total
p5010	2	PLT10x178x308	308	G40.21		4.3	8.6
	2						**8.6**

Marque	Quantité	Dans l'assemblage
p5010	1	C500
p5010	1	C502
	2	

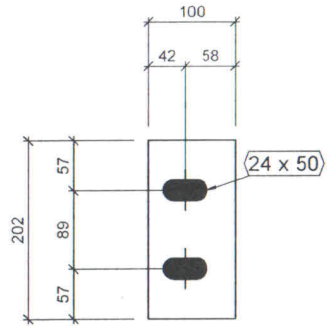

2 - p5011 PLT12.5x100x202 - G40.21

REGISTERED PROFESSIONAL ENGINEER
NT/NU

Rev.	Date	Par	Description
REV-4	2019-01-15	Julie Lajoie	STC-001 RÉVISION-4
REV-5	2019-01-28	Julie Lajoie	Révision ST-001

Projet : NEW PLATFORM

No. Projet : MH.2018.0839_ST

Statut : Révisé

Commentaire :

Détaillé par : Julie Lajoie

Trou : 13/16"Ø u/n

Client : Const. Gely

Vérifié par: Const. Gely

Soudure : E70XXELECT

No. Dessin : p5011

STRUCTURES M.H. inc. ENTREPRENEUR GÉNÉRAL

Acier : G40.21

Peinture: Aucun

Date : 2019-01-15

Sequence : REV-5

Marque	Quantité	Description	Longueur	Nuance	Finition	Poids	Poids total
p5011	2	PLT12.5x100x202	202	G40.21		2.0	4.0
	2						**4.0**

Marque	Quantité	Dans l'assemblage
p5011	2	P500
	2	

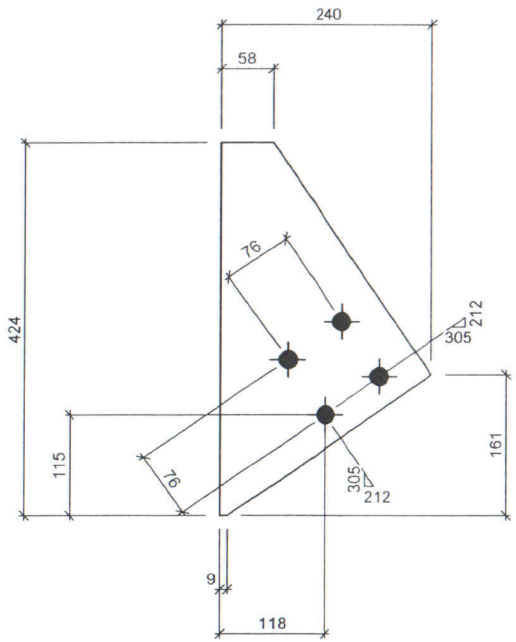

2 - p5013 PLT12.7x240.2x423.9 - G40.21

Marque	Quantité	Description	Longueur	Nuance	Finition	Poids	Poids total
p5013	2	PLT12.7x240.2x423.9	424	G40.21		5.9	11.8
	2						**11.8**

Marque	Quantité	Dans l'assemblage
p5013	1	D500
p5013	1	D502
	2	

REGISTERED PROFESSIONAL ENGINEER
NT/NU
25/01/19

Rev.	Date	Par	Description
REV-4	2019-01-15	Julie Lajoie	STC-001 RÉVISION-4
REV-5	2019-01-28	Julie Lajoie	Révision ST-001

Projet : NEW PLATFORM

No. Projet : MH.2018.0839_ST

Statut : Révisé

Commentaire :

Détaillé par : Julie Lajoie

Trou : 13/16"Ø u/n

Client : Const. Gel

Vérifié par: Const. Gely

Soudure : E70XXELECT

No. Dessin : p5013

STRUCTURES M.H. inc. ENTREPRENEUR GÉNÉRAL

Acier : G40.21

Peinture: Aucun

Sequence : REV-5

Date : 2019-01-15

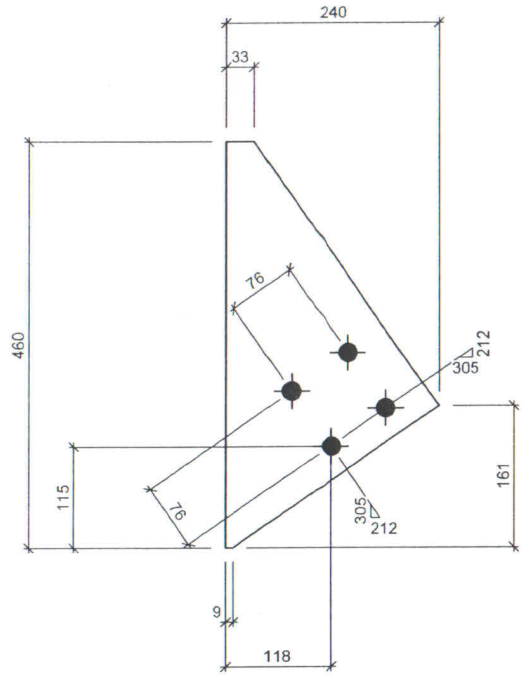

2 - p5014 PLT12.7x240.2x459.9 - G40.21

REGISTERED PROFESSIONAL ENGINEER
NTNU

Rev.	Date	Par	Description
REV-4	2019-01-15	Julie Lajoie	STC01 RÉVISION-4
REV-5	2019-01-28	Julie Lajoie	RévisionT-001

Projet : NEW PLATFORM

No. Projet : MH.2018.0839_ST

Statut : Révisé

Commentaire :

Détaillé par : Julie Lajoie

Trou : 13/16"Ø u/n

Clie Const. Gely

Vérifié par: Const. Gely

Soudure : E70XXELECT

No. Dessin : p5014

Acier : G40.21

Peinture: Aucun

Séance : REV-5

Date : 2019-01-15

STRUCTURES M.H. inc. ENTREPRENEUR GÉNÉRAL

Marque	Quantité	Description	Longueur	Nuance	Finition	Poids	Poids total
p5014	2	PLT12.7x240.2x459.9	460	G40.21		6.1	12.1
	2						12.1

Marque	Quantité	Dans l'assemblage
p5014	1	D500
p5014	1	D501
	2	

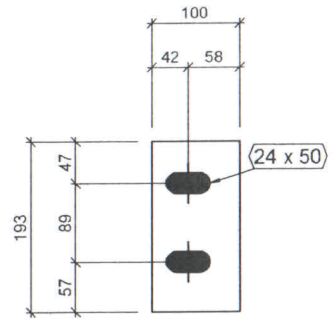

1 - p5015 PLT12.5x100x192.9 - G40.21

Marque	Quantité	Description	Longueur	Nuance	Finition	Poids	Poids total
p5015	1	PLT12.5x100x192.9	193	G40.21		1.9	1.9
	1						1.9

Marque	Quantité	Dans l'assemblage
p5015	1	P505
	1	

REGISTERED PROFESSIONAL ENGINEER
NT/NU

Rev.	Date	Par	Description
REV-4	2019-01-15	Julie Lajoie	STC001 RÉVISON-4
REV-5	2019-01-28	Julie Lajoie	RévisionST-001

Projet : NEW PLATFORM

No. Projet : MH.2018.0839_ST

Statut : Révisé

Commentaire :

Détaillé par : Julie Lajoie

Trou : 13/16"Ø u/n

Cliet : Const. Gely

Vérifié par: Const. Gely

Soudure : E70XXELECT

No. dessin : p5015

STRUCTURES M.H. inc. ENTREPRENEUR GÉNÉRAL

Acier : G40.21

Peinture: Aucun

Date : 2019-01-15

Sequence : REV-5

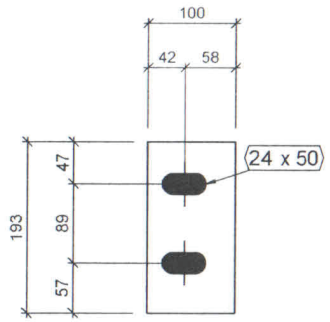

1 - p5016 PLT12.5x100x192.9 - G40.21

REGISTERED PROFESSIONAL ENGINEER
NTNU

Rev.	Date	Par	Description
REV-4	2019-01-15	Julie Lajoie	STC-001 RÉVISION-4
REV-5	2019-01-28	Julie Lajoie	Révision ST-001

Projet : NEW PLATFORM

No. Projet : MH.2018.0839_ST

Statut : Révisé

Commentaire :

Détaillé par : Julie Lajoie

Trou : 13/16"Ø u/n

Client : Const. Gely

Vérifié par: Const. Gely

Soudure : E70XXELECT

No. Dessin : p5016

STRUCTURES M.H. inc. ENTREPRENEUR GÉNÉRAL

Acier : G40.21

Peinture: Aucun

Date : 2019-01-15

Sequence : REV-5

Marque	Quantité	Description	Longueur	Nuance	Finition	Poids	Poids total
p5016	1	PLT12.5x100x192.9	193	G40.21		1.9	1.9
	1						1.9

Marque	Quantité	Dans l'assemblage
p5016	1	P506
	1	

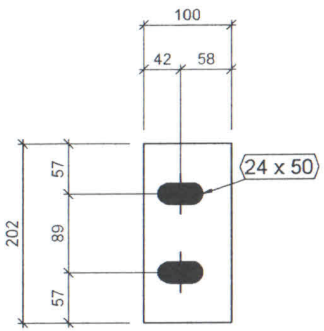

1 - p5017 PLT12.5x100x202 - G40.21

REGISTERED PROFESSIONAL ENGINEER
NT/NU
28/01/19

Rev.	Date	Par	Description
REV-4	2019-01-15	Julie Lajoie	STC-001 RÉVISION-4
REV-5	2019-01-28	Julie Lajoie	Révision ST-001

Projet : NEW PLATFORM

No. Projet : MH.2018.0839_ST

Statut : Révisé

Commentaire :

Détaillé par : Julie Lajoie

Trou : 13/16"Ø u/n

Client : Const. Gely

Vérifié par: Const. Gely

Soudure : E70XXELECT

No. Dessin : p5017

STRUCTURES M.H. inc. ENTREPRENEUR GÉNÉRAL

Acier : G40.21

Peinture: Aucun

Date : 2019-01-15

Sequence : REV-5

Marque	Quantité	Description	Longueur	Nuance	Finition	Poids	Poids total
p5017	1	PLT12.5x100x202	202	G40.21		2.0	2.0
	1						2.0

Marque	Quantité	Dans l'assemblage
p5017	1	P504
	1	

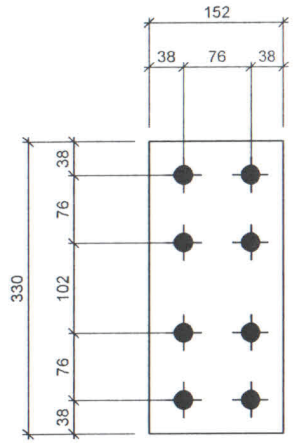

4 - p5023 PLT12.7x152.4x330.2 - G40.21

REGISTERED PROFESSIONAL ENGINEER
NT/NU
28/01/19

Rev.	Date	Par	Description
REV-4	2019-01-15	Julie Lajoie	STC-001 RÉVISION-4
REV-5	2019-01-28	Julie Lajoie	Révision ST-001

Projet : NEW PLATFORM

No. Projet : MH.2018.0839_ST

Statut : Révisé	Commentaire :	
Détaillé par : Julie Lajoie	Trou : 13/16"Ø u/n	Client : Const. Gely
Vérifié par: Const. Gely	Soudure : E70XXELECT	No. Dessin : p5023
STRUCTURES M.H. inc. ENTREPRENEUR GÉNÉRAL	Acier : G40.21	
	Peinture: Aucun	Sequence : REV-5
	Date : 2019-01-15	

Marque	Quantité	Description	Longueur	Nuance	Finition	Poids	Poids total
p5023	4	PLT12.7x152.4x330.2	330	G40.21		5.0	20.1
	4						20.1

Marque	Quantité	Dans l'assemblage
p5023	4	P510
	4	

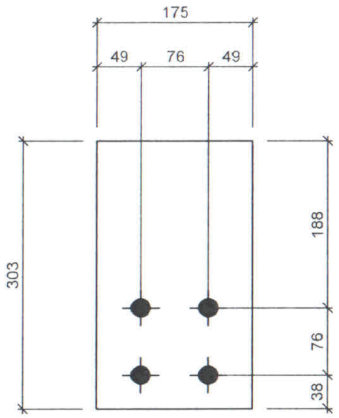

2 - p5024 PLT12.7x175x302.8 - G40.21

REGISTERED PROFESSIONAL ENGINEER
NT/NU
25/01/19

Rev.	Date	Par	Description
REV-4	2019-01-15	Julie Lajoie	STC-001 RÉVISION-4
REV-5	2019-01-28	Julie Lajoie	Révision ST-001

Projet : NEW PLATFORM

No. Projet : MH.2018.0839_ST

Statut : Révisé

Commentaire :

Détaillé par : Julie Lajoie

Trou : 13/16"Ø u/n

Client : Const. Gely

Vérifié par: Const. Gely

Soudure : E70XXELECT

No. Dessin : p5024

STRUCTURES M.H. inc. ENTREPRENEUR GÉNÉRAL

Acier : G40.21

Peinture: Aucun

Sequence : REV-5

Date : 2019-01-15

Marque	Quantité	Description	Longueur	Nuance	Finition	Poids	Poids total
p5024	2	PLT12.7x175x302.8	303	G40.21		5.3	10.6
	2						**10.6**

Marque	Quantité	Dans l'assemblage
p5024	1	D501
p5024	1	D502
	2	

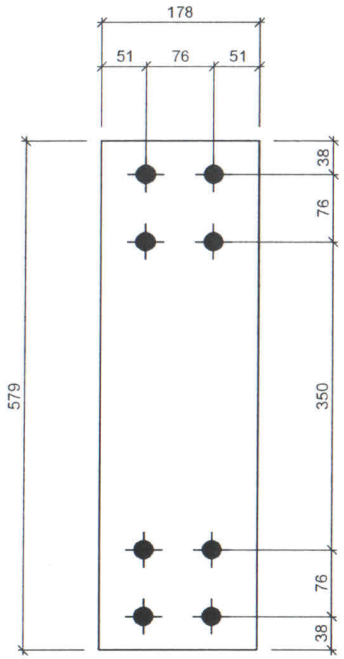

1 - p5025 PLT12.7x177.8x578.5 - G40.21

REGISTERED PROFESSIONAL ENGINEER
25/01/19
NT/NU

Rev.	Date	Par	Description
REV-4	2019-01-15	Julie Lajoie	STC-001 RÉVISION-4
REV-5	2019-01-28	Julie Lajoie	Révision ST-001

Projet : NEW PLATFORM

No. Projet : MH.2018.0839_ST

Statut : Révisé

Commentaire :

Détaillé par : Julie Lajoie

Trou : 13/16"Ø u/n

Client : Const. Gely

Vérifié par: Const. Gely

Soudure : E70XXELECT

No. Dessin : p5025

STRUCTURES M.H. inc. ENTREPRENEUR GÉNÉRAL

Acier : G40.21

Peinture: Aucun

Sequence :

Date : 2019-01-15

REV-5

Marque	Quantité	Description	Longueur	Nuance	Finition	Poids	Poids total
p5025	1	PLT12.7x177.8x578.5	579	G40.21		10.3	10.3
	1						10.3

Marque	Quantité	Dans l'assemblage
p5025	1	D500
	1	

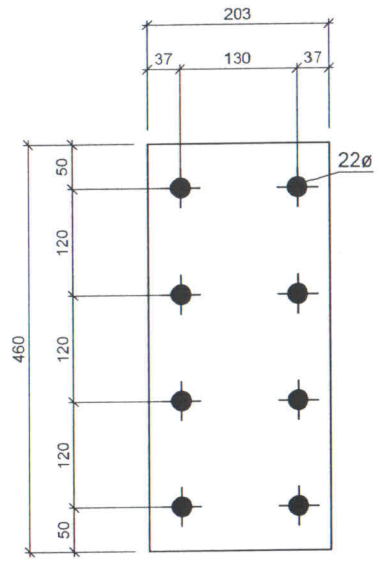

2 - p5026 PLT12.7x203x460 - G40.21

REGISTERED PROFESSIONAL ENGINEER
NT/NU

Rev.	Date	Par	Description
REV-4	2019-01-15	Julie Lajoie	STC-001 RÉVISION-4
REV-5	2019-01-28	Julie Lajoie	Révision ST-001

Projet : NEWPLATFORM

No. Projet : MH.2018.0839_ST

Statut : Révisé

Commentaire :

Détaillé par : Julie Lajoie

Trou : 13/16"Ø u/n

Client : Const. Gely

Vérifié par: Const. Gely

Soudure : E70XXELECT

No. Dessin : p5026

STRUCTURES M.H. inc. ENTREPRENEUR GÉNÉRAL

Acier : G40.21

Peinture: Aucun

Sequence : REV-5

Date : 2019-01-15

Marque	Quantité	Description	Longueur	Nuance	Finition	Poids	Poids total
p5026	2	PLT12.7x203x460	460	G40.21		9.3	18.6
	2						18.6

Marque	Quantité	Dans l'assemblage
p5026	1	P505
p5026	1	P506
	2	

SUBMITTALS IDENTIFICATION SHEET

PROJECT: Wastewater Treatment Plant Upgrade
Iqaluit, Nunavut

NUNAMI
STANTEC LIMITED

1088C Noble House
Iqaluit NU
www.stantec.com

STANTEC PROJECT #: 110126045

SUBMITTAL # STC-002

This review by Stantec is for general conformance with the design concept of Stantec's design of the:

- [x] Architectural
- [ ] Structural
- [ ] Mechanical
- [ ] Electrical
- [ ] Other _____

Stantec

component(s) only and does not mean that Stantec has verified or approves the shop drawing(s). The Contractor remains solely responsible for the shop drawing(s) and this review by Stantec does not relieve the Contractor of the Contractor's responsibility for errors or omissions in the shop drawing(s) or for meeting all requirements of the contract documents. This review does not mean that Stantec approves the detailed design inherent in the shop drawing, responsibility for which shall remain with the Contractor submitting same, nor does this review mean that Stantec accepts any deviation of the shop drawing(s) from the contract documents. The Contractor is responsible for confirming all dimensions and correlating them at the job site, for all construction means, methods and techniques, and for coordination of construction work of all trades, including coordination of all shop drawings.

- [x] REVIEWED
- [ ] REVIEWED, AS NOTED
- [ ] REVISE AND RESUBMIT
- [ ] NOT REVIEWED

DATE 2018-06-26

BY Jason King

CONTRACTOR: Kudlik Construction Ltd, Project 2018-062

Telephone: 867-979-1166

E-mail: srousseau@kudlik.biz

SUBCONTRACTOR:

Person responsible:

Telephone: E-mail:

PRODUCT SUBMITTED:

- [ ] As Specified
- [ ] Alternate

SUPPLIER or MANUFACTURER: Givesco

Person responsible: Marcel Tanguay

Telephone: E-mail: mtanguay@givesco.com

DESCRIPTION OF SUBMITTAL:

# of pages:

Reference to drawings:

Reference to specs:

Division: 03 Section: 03 35 00 – 03 35 05

REMARKS:

REVIEW AND COMMENTS (for use by Consultants):

STANTEC PROJECT #: 110126045

SUBMITTAL # STC-002

This review by Stantec is for general conformance with the design concept of Stantec's design of the:

- [ ] Architectural
- [x] Structural
- [ ] Mechanical
- [ ] Electrical
- [ ] Other _____

Stantec

component(s) only and does not mean that Stantec has verified or approves the shop drawing(s). The Contractor remains solely responsible for the shop drawing(s) and this review by Stantec does not relieve the Contractor of the Contractor's responsibility for errors or omissions in the shop drawing(s) or for meeting all requirements of the contract documents. This review does not mean that Stantec approves the detailed design inherent in the shop drawing, responsibility for which shall remain with the Contractor submitting same, nor does this review mean that Stantec accepts any deviation of the shop drawing(s) from the contract documents. The Contractor is responsible for confirming all dimensions and correlating them at the job site, for all construction means, methods and techniques, and for coordination of construction work of all trades, including coordination of all shop drawings.

- [ ] REVIEWED
- [x] REVIEWED, AS NOTED
- [ ] REVISE AND RESUBMIT
- [ ] NOT REVIEWED

DATE 2018-06-26

BY pclyne

CONCRETE NOT TO BE AIR ENTRAINED IN PORTIONS OF CONCRETE THAT ARE TO HAVE SURFACE HARDNER TREATMENT.

Review of this submission is for compliance with general intent of the contract. This review does not relieve the Sub-Contractor, Supplier or Manufacturer of responsibility for error or omissions in the submission or the responsibility of meeting all requirements of the contract documents. Any deviation from the contract documents initiated by the Sub-Contractor, Supplier or Manufacturer shall be at their sole risk. QUANTITIES AND DETAIL DIMENSIONS ARE THE SUB-CONTRACTORS OR SUPPLIERS RESPONSIBILITY. VERIFY DATA WITH FIELD DIMENSIONS.

SUBMITTAL TRACKING No.: **STC-002**

2018-06-22

PRODUCT DATA

MasterFormat: 03 35 00

W. R. MEADOWS SEALTIGHT

NO. 378

JANUARY 2015
(Supersedes December 2008)

LIQUI-HARD®

Concrete Densifier and Chemical Hardener

DESCRIPTION

LIQUI-HARD concrete densifier and chemical hardener compound is a proprietary, water-based, ready-to-use, clear silicate liquid, formulated with chemically reactive raw materials to harden and dustproof concrete. This waterborne solution, when properly applied, offers substantial improvement in abrasion and chemical resistance and will significantly improve the durability of the concrete surface when compared to untreated concrete. As LIQUI-HARD is applied and penetrates into the concrete surface, a chemical reaction takes place, producing a byproduct that fills in the pores of the concrete. This process produces a substantially denser concrete surface with enhanced durability. In addition to the densifying and hardening action, LIQUI-HARD also solidifies the concrete, eliminating dusting and pitting.

USES

LIQUI-HARD is recommended for use wherever hardened, dustproofed, and improved chemical- and abrasion-resistant surfaces are required. Ideal applications include floors in industrial plants and warehouses, storage silos, sewage plants, chemical processing facilities, refineries, and heavy pedestrian floor traffic areas, such as civic centers, sports arenas, stadiums, hospitals, airports, and museums. LIQUI-HARD can successfully be used in conjunction with shake-on hardeners.



The **INDUROSHINE®** system from W. R. MEADOWS combines green certified concrete polishing and diamond grinding equipment with LIQUI-HARD to create a unique, high sheen, wear-resistant concrete floor. Please contact W. R. MEADOWS for more information.

FEATURES/BENEFITS

- Penetrates deeply into concrete to densify and harden surfaces to help prevent entry of moisture and other foreign matter.
- Dustproofs and improves chemical, petroleum, and abrasion resistance of treated surfaces.
- Provides a permanent, attractive sheen with the ability to polish.
- Protects against scratching or peeling.
- Provides tough, protected surface that won't after-yellow, discolor, or show pedestrian or vehicular traffic wear marks.
- Improves light reflectance.
- Ready to use from container and easy to apply.
- VOC-compliant.

PACKAGING

5 Gallon (18.93 Liter) Pails
55 Gallon (208.20 Liter) Drums

COVERAGE/APPLICATION RATE

Type of Surface	$ft.^2/gal.$	m^2/L
*Fresh (Newly Placed)	300	7.36
Existing (Old)	200	4.91

*When used as a curing aid on newly placed concrete.

Note: Coverage rates may vary, depending on the finish and porosity of the concrete.

SHELF LIFE

When stored indoors in original, unopened containers at temperatures between 40° - 90° F (4° - 32° C), optimum performance and best use is obtained within one year of date of manufacture.

SPECIFICATIONS

- Complies with U.S. EPA, LADCO, OTC, SCAQMD, and all other current North American VOC regulations.
- Treated surface is USDA accepted.

TECHNICAL DATA

VOC Content: 0 g/L

CONTINUED ON REVERSE SIDE…

W. R. MEADOWS, INC.
P.O. Box 338 • HAMPSHIRE, IL 60140-0338
Phone: 847/214-2100 • Fax: 847/683-4544
1-800-342-5976
www.wrmeadows.com

APPLICATION

Surface Preparation ... *Fresh Concrete:* On newly placed concrete, LIQUI-HARD can be applied after final troweling. *Existing (Old) Concrete:* Surface should be clean and structurally sound. Remove all residues, curing compounds, oils, sealers, contaminants, and laitance before applying LIQUI-HARD. ULTRITE® DEGREASER from W. R. MEADOWS may be used for cleaning. Fill and repair all holes, cracks, and deteriorated areas that have been removed to sound concrete.

For optimum results on fresh, newly placed concrete, use MED-CURE™ curing aid from W. R. MEADOWS immediately after final finishing operations have been completed. Apply LIQUI-HARD according to above existing concrete directions a minimum of three days after placement of concrete.

Mixing ... For optimum performance, gentle mixing or agitation is recommended.

Application Method … *Fresh Concrete:* Apply undiluted LIQUI-HARD at approximately 300 $ft.^2$/gal. (4.91 m^2/L) using a low-pressure sprayer, such as a Chapin 1949 with a 0.5 GPM (1.9 LPM) spray nozzle, or by spreading evenly with a soft-bristled broom. Do not allow material to puddle on the surface. No further application steps are required for fresh concrete.

Existing (Old) Concrete: Saturate the surface with undiluted LIQUI-HARD by sprayer, squeegee or broom. Keep the surface wet with LIQUI-HARD for a minimum of 30 minutes. (A range of 30 - 60 minutes may be required depending on temperature and conditions.) NOTE: Pay particular attention to porous and/or dry areas. These areas must be kept wet at all times with LIQUI-HARD. Once the surface begins to gel and becomes slippery, immediately spray the surface with a light water mist. Scrub the surface with a broom or mechanical scrubber to increase the penetration of the LIQUI-HARD. Continue to work the LIQUI-HARD into the surface for another 5 - 10 minutes or until LIQUI-HARD becomes gelled and slippery for a second time. At this time, THOROUGHLY flush the surface with water. During the flushing process, agitate the surface with a broom to aid in removal of the excess LIQUI-HARD. Remove all excess material with a mop or squeegee. Thoroughly squeegee the surface dry. If there are slippery patches, this is an indication that there is still excess LIQUI-HARD present. These areas should be re-flushed and squeegeed again until the entire surface is dry. (Extremely porous surfaces may require a second application.)

WARNING: Failure to thoroughly wash and remove all excess material from floor surfaces may result in unsightly white stains. Immediately wash off over-spray from glass, aluminum, or highly polished surfaces with water to avoid etching of surfaces. For application assistance, contact W. R. MEADOWS at (800) 342-5976.

Burnishing … LIQUI-HARD can be burnished to a high sheen on steel trowel concrete floors. A high-speed burnisher (2000 - 2200 rpm) with appropriate maintenance pad is needed.

Drying Time ... 2 - 4 hours. LIQUI-HARD dries very quickly on new, virgin concrete. Drying times may be extended on existing (old) concrete due to surface conditions. Restrict foot traffic for at least four hours; 12 hours is preferable.

Cleanup ... While still wet, equipment may be cleaned quickly and easily with soap and water. Do not allow LIQUI-HARD to dry before flushing excess from surfaces.

PRECAUTIONS

DO NOT DILUTE. Do not apply if the temperature of the concrete is less than 35˚ F (2˚ C) or above 135˚ F (57˚ C). **KEEP FROM FREEZING**. If frozen, product should be thawed and agitated slightly prior to use.

HEALTH HAZARDS

LIQUI-HARD is non-combustible. (Flash point is greater than 210˚ F.) Direct contact will result in irritation of the skin and eyes. Inhalation of product mist may result in respiratory irritation. Refer to Safety Data Sheet for complete health and safety information.

LEED INFORMATION

May help contribute to LEED credits:

- IEQ Credit 4.2: Low-Emitting Materials: Paints and Coatings
- IEQ Credit 4.3: Low-Emitting Materials – Flooring Systems
- MR Credit 2: Construction Waste Management
- MR Credit 5: Regional Materials

For most current data sheet, further LEED information, and SDS, visit www.wrmeadows.com.

LIMITED WARRANTY

W. R. MEADOWS, INC. warrants at the time and place we make shipment, our material will be of good quality and will conform with our published specifications in force on the date of acceptance of the order. Read complete warranty. Copy furnished upon request.

Disclaimer

The information contained herein is included for illustrative purposes only, and to the best of our knowledge, is accurate and reliable. W. R. MEADOWS, INC. cannot however under any circumstances make any guarantee of results or assume any obligation or liability in connection with the use of this information. As W. R. MEADOWS, INC. has no control over the use to which others may put its product, it is recommended that the products be tested to determine if suitable for specific application and/or our information is valid in a particular circumstance. Responsibility remains with the architect or engineer, contractor and owner for the design, application and proper installation of each product. Specifier and user shall determine the suitability of products for specific application and assume all responsibilities in connection therewith.

© W. R. MEADOWS 2002

BUILDING TRUST
CONSTRUIRE LA CONFIANCE

PRODUCT DATA SHEET
Edition 12.2017/v1
CSC Master Format™ 03 35 16
HEAVY-DUTY CONCRETE FLOOR FINISHING

03 35 05 hardening

Sika® Diamag-7®

ECONOMICAL MINERAL SURFACE HARDENER

Description

Sika® Diamag-7® is an economical, mineral broadcast-applied surface hardener. It contains carefully graded, hard wearing particles, which provide an exceptionally durable surface. Special dispersing and plasticizing agents promote ease of incorporation into the concrete surface. Sika® Diamag-7® is premixed and ready-to-use.

Where to Use

Designed for use in industrial and commercial flooring exposed to moderate levels of abrasion, impact and loading. Suitable for both interior and exterior exposure:

- Storage rooms and dressing rooms.
- Food processing areas.
- Manufacturing plants, electrical equipment rooms.
- Roller rinks/Ice rinks.
- Service areas, warehouses, supermarkets, etc.
- Warehouse floors.
- Loading docks.
- Hangars.

Advantages

- Easy application.
- High resistance to abrasion.
- Improves impact resistance.
- Higher surface density than plain concrete.
- Improves resistance to oils, greases, and some industrial chemicals.
- Saves time and labour costs.
- Lowers maintenance requirements.
- Reduces surface dust.
- Provides a slip-resistant surface when properly finished.
- Canadian Food Inspection Agency acceptance.

Technical Data

Packaging	25 kg (55 lb) bag
Colour	Natural Concrete Grey
Yield	
Dressing rooms, storage rooms, light duty manufacturing	5 kg/m² (1 lb/ft²)
Average manufacturing, services bays, garages, warehouses	5 - 6 kg/m² (1 - 1.2 lb/ft²)
Heavy-duty manufacturing, machine areas, roller rinks	7 - 8 kg/m² (1.4-1.6 lb/ft²)
Shelf Life	1 year in original, unopened packaging. Store dry, ensuring that product is not exposed to rain, condensation or high humidity.
Application Temperature	16 to 30°C (61 to 86°F)

Properties at 23 °C (73 °F) and 50 % R.H.

Hardness (Moh's scale)	6.5 - 7
Compressive Strength (28 days)	50 MPa (7250 psi)

Product properties are typically averages, obtained under laboratory conditions. Reasonable variations can be expected on-site due to local factors, including environment, preparation, application, curing and test methods.

How to Use

Cold Weather: Where required, space heaters must be properly vented to avoid floor surface damage caused by carbonation or contamination.
Hot Weather: Adjustments to application procedures may be required to offset rapid setting of concrete surface before applying Sika® Diamag-7®. Contact your Sika Canada Representative for further information regarding hot weather installations.

Application	Sika® Diamag-7® is applied to the surface in 2 or 3 broadcasts, each being floated using power equipment. The surface is then power-trowelled and hand-trowelled as required to a satisfactory finish. Apply the first broadcast of Sika® Diamag-7®, as soon as concrete is firm enough to support the weight of workmen and their equipment and no standing water is present on the surface. Use up to 2/3 of the total material in the first application. Treat areas adjacent to walls and columns first. Spread the product evenly by broadcasting at right angles in two passes close to surface level. Do not broadcast from a stationary position to avoid uneven distribution of the hardener. Allow Sika® Diamag-7® to absorb surface moisture. Float the broadcasted material promptly. Work wall, column and door areas first. Avoid excessive floating, but ensure that the broadcast application is completely wetted and incorporated into the base slab. Follow immediately behind first floating, apply the remaining material, and install as above. A third power floating may follow for added compaction, if required. **Note 1:** If a coarse, non-slip finish is required, do not proceed with further floating or trowelling operations after second floating, but allow the surface to cure. **Note 2:** For applications greater than 5 kg/m^2 (1 lb/ft^2), apply hardener in 3 shakes. First application should be 50 % of the total required material and 25 % in each of the subsequent applications. Proceed with power trowelling as soon as the floor surface begins to lose moisture sheen, setting the trowel blades at a flat angle. As floor stiffens further, proceed with second trowelling with trowel angle raised. When a minimum amount of cement paste clings to the trowel edges, proceed with final trowelling. Eliminate trowel marks, pinholes or any other flaws.
Curing	As soon as final trowelling is completed and applicator and equipment cannot damage the surface, apply as per printed directions by low-pressure spray, one or more coats of Sika® Florseal WB-18 & -25. Protect finished surface from damage by traffic or trades until sufficiently hardened.
Clean Up	Clean all tools and equipment promptly with water. Remove hardened product mechanically.
Limitations	▪ Important: protect stored material from exposure to rain, condensation and high humidity as moisture may penetrate packaging, causing lumps. ▪ For best results, condition product to 18 to 29 °C (65 to 84 °F) prior to mixing and installation. Lower temperatures may result in slower strength development and longer cure times. ▪ Not recommended for areas where exposure to oxidizing, mineral and organic acids is likely. ▪ Certain admixtures such as Calcium Chloride and/or admixtures containing Calcium Chloride and high range water reducing admixtures should not be used in concrete on which hardeners are to be applied. ▪ Do not apply over concrete containing more than 3% entrained air. ▪ For application on slabs containing fly ash or slag, contact your Sika Canada Representative for unique application procedures or precautions.
Health and Safety Information	For information and advice on the safe handling, storage and disposal of chemical products, users should refer to the most recent SAFETY DATA SHEET containing physical, ecological, toxicological and other safety-related data. KEEP OUT OF REACH OF CHILDREN FOR INDUSTRIAL USE ONLY

The Information, and in particular, the recommendations relating to the application and end-use of Sika products, are given in good faith based on Sika's current knowledge and experience of the products when properly stored, handled and applied under normal conditions, within their shelflife. In practice, the differences in materials, substrates and actual site conditions are such that no warranty in respect of merchantability or of fitness for a particular purpose, nor any liability arising out of any legal relationship whatsoever, can be inferred either from this information, or from any recommendations, or from any other advice offered. The information contained herein does not relieve the user of the products from testing them for the intended application and purpose. The proprietary rights of third parties must be observed. All orders are accepted subject to our current terms of sale and delivery. Users must always refer to the most recent issue of the local Product Data Sheet for the product concerned, copies of which will be supplied on request or may be downloaded from our website at: www.sika.ca

SIKA CANADA INC.
Head Office
601, avenue Delmar
Pointe-Claire, Quebec
H9R 4A9

Other locations
Toronto
Edmonton
Vancouver

1-800-933-SIKA
www.sika.ca

Certified ISO 9001 (CERT-0102780)
Certified ISO 14001 (CERT-0102791)

SUBMITTALS IDENTIFICATION SHEET

PROJECT: Wastewater Treatment Plant Upgrade
Iqaluit, Nunavut

NUNAMI
STANTEC LIMITED
1088C Noble House
Iqaluit NU
www.stantec.com

CONTRACTOR: Kudlik Construction Ltd, Project 2018-062

Telephone: 867-979-1166

E-mail: srousseau@kudlik.biz

SUBCONTRACTOR: Concentric

Person responsible: Adam Palmer

Telephone: 519-452-7700 E-mail: adam@concentriceng.com

PRODUCT SUBMITTED:

☐ As Specified

☐ Alternate

SUPPLIER or MANUFACTURER:

Person responsible

Telephone: E-mail:

DESCRIPTION OF SUBMITTAL:

# of pages:

Reference to drawings:

Reference to specs:

Division: 05 – 06 - 07 Section:

REMARKS:

REVIEW AND COMMENTS (for use by Consultants):

STANTEC PROJECT #: 110126045 SUBMITTAL # stc-003 CONCENTRIC REV r3

This review by Stantec is for general conformance with the design concept of Stantec's design of the:

☑ Architectural ☐ Electrical
☐ Structural ☐ Other
☐ Mechanical

component(s) only and does not mean that Stantec has verified or approves the shop drawing(s). The Contractor remains solely responsible for the shop drawing(s) and this review by Stantec does not relieve the Contractor of the Contractor's responsibility for errors or omissions in the shop drawing(s) or for meeting all requirements of the contract documents. This review does not mean that Stantec approves the detailed design inherent in the shop drawing, responsibility for which shall remain with the Contractor submitting same, nor does this review mean that Stantec accepts any deviation of the shop drawing(s) from the contract documents. The Contractor is responsible for confirming all dimensions and correlating them at the job site, for all construction means, methods and techniques, and for coordination of construction work of all trades, including coordination of all shop drawings.

Stantec

☐ REVIEWED
☑ REVIEWED, AS NOTED
☐ REVISE AND RESUBMIT
☐ NOT REVIEWED

DATE 2018-09-13

BY TFlender

see notes on drawing

STANTEC PROJECT #: 110126045 SUBMITTAL # STC-003R3

This review by Stantec is for general conformance with the design concept of Stantec's design of the:

☐ Process ☐ Electrical
☑ Structural ☐ Other
☐ Mechanical

component(s) only and does not mean that Stantec has verified or approves the shop drawing(s). The Contractor remains solely responsible for the shop drawing(s) and this review by Stantec does not relieve the Contractor of the Contractor's responsibility for errors or omissions in the shop drawing(s) or for meeting all requirements of the contract documents. This review does not mean that Stantec approves the detailed design inherent in the shop drawing, responsibility for which shall remain with the Contractor submitting same, nor does this review mean that Stantec accepts any deviation of the shop drawing(s) from the contract documents. The Contractor is responsible for confirming all dimensions and correlating them at the job site, for all construction means, methods and techniques, and for coordination of construction work of all trades, including coordination of all shop drawings.

Stantec

☐ REVIEWED
☑ REVIEWED, AS NOTED
☐ REVISE AND RESUBMIT
☐ NOT REVIEWED

DATE 2018-09-14

BY Petr Polivka

see notes on drawing

Review of this submission is for compliance with general intent of the contract. This review does not relieve the Sub-Contractor, Supplier or Manufacturer of responsibility for error or omissions in the submission or the responsibility of meeting all requirements of the contract documents. Any deviation from the contract documents initiated by the Sub-Contractor, Supplier or Manufacturer shall be at their sole risk. QUANTITIES AND DETAIL DIMENSIONS ARE THE SUB-CONTRACTORS OR SUPPLIERS RESPONSIBILITY. VERIFY DATA WITH FIELD DIMENSIONS.

SUBMITTAL TRACKING No.: **STC-003 R2**

2018-09-06

GENERAL:

1. STEEL STUDS AND TRACK SECTION PROPERTIES HAVE BEEN DETERMINED IN ACCORDANCE WITH CSA STANDARD CAN/CSA S136–94, COLD FORMED STRUCTURAL STEEL STRUCTURAL MEMBERS.
2. STEEL STUDS USED FOR STEEL STUD AND TRACK SHALL SHALL CONFORM TO THE REQUIREMENTS OF ASTM A446 STANDARD SPECIFICATIONS FOR SHEET STEEL, ZINC COATED (GALVANIZED BY THE TOP DIP PROCESS, STRUCTURAL (PHYSICAL) QUALITY).
   MINIMUM GRADES ARE:
   GRADE 230 – (230 KS YIELD) FOR 0.033", 0.03N", AND 0.048".
   GRADE D – (50 KS YIELD) FOR 0.060", AND 0.079"
3. STEEL STUDS, TRACK AND ACCESSORIES ARE TO BE OF THE MINIMUM SIZE AND THICKNESS NOTED ON DRAWINGS.
4. SCREWS AND ANCHORS SHALL HAVE MINIMUM ZINC COATING OF 0.00mm.
5. ALL HILTI FASTENERS TO BE 0.157"/Ø4" HILTI X–U INSTALLED AS PER MANUFACTURERS SPECIFICATIONS. SPACING OF X–U FASTENERS TO BE 1" MIN. MINIMUM ¾" TO EDGE OF STEEL BEAM / STEEL STUD. MINIMUM 2¾" TO EDGE OF CONCRETE.
6. ALL #14–10 SCREWS WITH HEX HEAD TO BE MASTER DRILLER No. 2 MIN DRILL POINT WITH DT2000 COATING OR EQUIVALENT, UNLESS NOTED OTHERWISE. ALL SCREWS INSTALLED WITH A DRILL.
7. C–GIRTS AND CHANNELS ARE TO BE A MINIMUM OF 18 GAUGE EACH FLANGE AND HAVE A MINIMUM YIELD STRENGTH OF 345mPa. SEE SPECIFICATION 05 41 00 STRUCTURAL METAL STUD FRAMING.
8. THERMAL CLIPS TO BE CASCADIA CLIPS AS PER SPECIFICATION 08 75 00 COMPOSITE INSULATION CLIPS.
9. FOR STEEL STUD REQUIREMENTS SEE SPECIFICATION 05 41 00 STRUCTURAL METAL STUD FRAMING.
10. FOR EXTERIOR WALL COVERING REQUIREMENTS SEE SPECIFICATIONS 07 46 13. PREFORMED METAL SIDING.
11. FOR ROOF COVERING REQUIREMENTS SEE SPECIFICATIONS 07 46 18. STEEL ROOFING.

FABRICATION AND INSTALLATION:

1. CONNECTIONS SHALL BE MADE WITH FASTENERS AS SHOWN ON DRAWINGS SO THAT THE CONNECTIONS MEETS OR EXCEEDS THE DESIGN LOADS REQUIRED AT THAT SECTION.
2. ALL SCREWS SHALL BE CORROSION RESISTANT STEEL, A CORROSION RESISTANT MATERIAL COMPATIBLE WITH THE GALVANIZED COATINGS. NO BLACK METAL CONNECTORS WILL BE ACCEPTED. SUBSTITUTIONS MUST BE APPROVED BY THE ENGINEER.
3. WIRE TYING IN STRUCTURAL APPLICATIONS IS NOT PERMITTED.
4. CUTTING OF STEEL FRAMING MEMBERS SHALL BE BY SAW OR SHEAR, NO TORCH OR MANUAL CUTTING PERMITTED.
5. SPLICING STUDS IS NOT PERMITTED. TRACK SPLICES MAY BE ACCOMPLISHED BETWEEN STUD LOCATIONS BY CUTTING BACK THE SLOTTED TRACK AND FASTENING WITH TWO SCREWS OR WELDS PER FLANGE TO EACH PIECE OF TRACK.
6. BRIDGING SHALL BE OF A SIZE, SPACING AND TYPE SHOWN ON THESE DRAWINGS AND SHALL BE INSTALLED SO AS TO PROVIDE RESISTANCE TO AXIAL BENDING AND ROTATION OF WALL STUDS.
7. WALL TRACK SHALL NOT BE USED TO SUPPORT ANY LOADS UNLESS SPECIFICALLY DESIGNED FOR THAT PURPOSE.
8. TEMPORARY BRACING SHALL BE PROVIDED AND LEFT IN PLACE UNTIL WORK IS PERMANENTLY SECURED.
9. HOLES THAT ARE FIELD CUT INTO STEEL FRAMING MEMBERS SHALL BE WITHIN LIMITATIONS OF THE PRODUCT AND ITS DESIGN; PROVIDE REINFORCEMENT WHERE HOLES ARE CUT THROUGH LOAD BEARING MEMBERS IN ACCORDANCE WITH MANUFACTURERS RECOMMENDATIONS AND AS APPROVED BY THE ENGINEER.
10. COMPLETE BEARING SHALL BE PROVIDED UNDER AXIALLY LOADED STUDS AND TRACKS TO PROVIDE FOR LOAD TRANSFER.

TOLERANCES:

1. VERTICAL ALIGNMENT (PLUMBNESS) OF STUDS SHALL BE WITHIN 1/500 OF THE SPAN.
2. HORIZONTAL ALIGNMENT (LEVELNESS) OF WALLS SHALL BE WITHIN 1/1000 OF THEIR RESPECTIVE LENGTHS.
3. SPACING OF STUDS SHALL BE ±3mm FROM DESIGN SPACING PROVIDING THAT THE CUMULATIVE ERROR DOES NOT EXCEED THE REQUIREMENTS OF THE FINISHING MATERIALS.
4. GAP BETWEEN END OF STUD AND NON–SLIP TRACK WEB TO BE 4mm MAXIMUM.

DESIGN LOADS

1. CLIMATIC DATA: LOCATION – IQALUIT, NUNAVUT
2. WIND LOAD: q 1/50 = 0.45kPa
   q 1/10 = 0.38kPa
   Cg = 2.0
3. SNOW LOAD: Sr = 2.9 kPa
   Ss = 0.00 kPa
   Is = 1.25
4. EXTERIOR WALL METAL FRAMING HAS BEEN DESIGNED TO WITHSTAND A MAXIMUM DEFLECTION OF L/360.

See also Site Information table on S002 for Wind Exposure and Internal Pressure category

EXTERIOR WALL SCHEDULE

WALL TYPE	STUD DEPTH	STUD DESIGNATION	STUD THICKNESS	STUD SPACING	TOP TRACK & FASTENERS			BOTTOM TRACK & FASTENERS			
					TRACK	STUD TO TRACK	TRACK TO STEEL BEAM	TRACK	STUD TO TRACK	TRACK TO CONCRETE FLOOR	TRACK TO STEEL
STUD1	203mm	800S162–54	16 GA.	400mm	16 GA. 203mm TRACK 800S.1250–54	2–#12–14 SELF–DRILLING SCREWS EACH STUD	2–0.157" HILTI X–U EACH STUD	16 GA. 203mm TRACK	2–#12–14 SELF–DRILLING SCREWS EACH STUD	2–0.157" HILTI X–U EACH STUD ↑ ¾" LONG	2–0.157" HILTI X–U EACH STUD

EXTERIOR CLADDING SCHEDULE

WALL TYPE	EXTERIOR FINISH		HAT CHANNEL				Z–GIRTS			203mm CASCADIA CLIPS		
	EXTERIOR FINISH DESIGNATION	FASTENERS TO HAT CHANNEL	HAT CHANNEL DESIGNATION	"A" SPACING	FASTENERS TO Z–GIRTS OR STUD	FASTENERS TO EXISTING CONCRETE WALL	Z–GIRT DESIGNATION	"B" SPACING	FASTENERS TO CASCADIA CLIPS	"B" SPACING	"C" SPACING	FASTENERS TO STUDS
EW1	¾" CORRUGATED 26 GA. VICWEST CLADDING	#12–14 SELF–DRILLING SCREWS EVERY THIRD FLUTE	22mm 18 GA. GALV.	610mm	2–#12–14 SELF–DRILLING SCREWS	N/A	38x25x38 18 GA. GALV	400mm	2–#14–10 WITH HEX HEAD	400mm	610mm	2–#14–10 SCREWS WITH HEX HEAD
EW2	¾" CORRUGATED 26 GA. VICWEST CLADDING	#12–14 SELF–DRILLING SCREWS EVERY THIRD FLUTE	22mm 18 GA. GALV.	1200mm	N/A	2–¾" TAPCON X 152mm W/ MINIMUM @ 610mm AND 25mm EMBEDMENT	N/A	N/A	N/A	N/A	N/A	N/A
EW3	¾" CORRUGATED 26 GA. VICWEST CLADDING	#12–14 SELF–DRILLING SCREWS EVERY THIRD FLUTE	22mm 18 GA. GALV.	610mm	2–#12–14 SELF–DRILLING SCREWS	N/A	N/A	N/A	N/A	N/A	N/A	N/A

ROOF SCHEDULE

ROOF TYPE	ROOF CLADDING	SPACING OF CLIPS "D"	FASTENERS TO PLYWOOD	PLYWOOD		UPPER Z–GIRTS			150mm CASCADIA CLIPS		
				PLYWOOD DESIGNATION	FASTENERS INTO UPPER Z–GIRT	Z–GIRT DESIGNATION	"E" SPACING	FASTENERS TO LOWER Z–GIRTS	"F" SPACING	"G" SPACING	FASTENERS TO ROOF DECK (MIN. 20 GA.)
R1 & R2	¾" TRADITION 100 VICWEST 24 GA. CLADDING	400mm	2–#12 PANCAKE HEAD TYPE A SELF TAPPING FASTENERS*	16mm T&G DOUGLAS FIR	#12–14x1" WOOD TO METAL SELF DRILLING SKEWS @ 300mm	38x150x38 18 GA. GALV	400mm	#12–14 SELF–DRILLING SCREW	400mm	400mm	2–#14–10 SCREWS WITH HEX HEAD

NOTE:
* USE 5–#14 TYPE AB S.T. FASTENER PER SHEET @ PANEL ENDS.

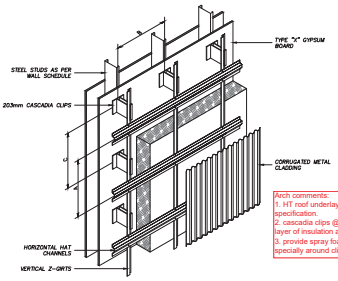

TYP. NEW WALL CONSTRUCTION
SCALE: N.T.S.

NOTE:
SEE SCHEDULES BELOW FOR GIRT AND STUD SPACING DIMENSIONS.

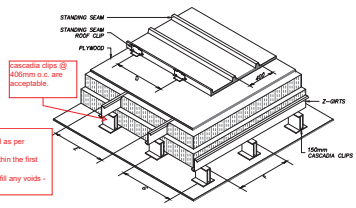

cascadia clips @ 406mm o.c. are acceptable.

Arch comments:
1. HT roof underlayment is required as per specification.
2. cascadia clips @ 406mm o.c. within the first layer of insulation are acceptable.
3. provide spray foam insulation to fill any voids - specially around clips.

TYP. ROOF CONSTRUCTION
SCALE: N.T.S.

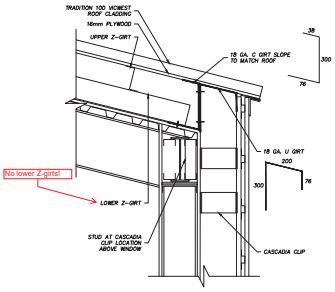

EAVE DETAIL
SCALE: N.T.S.

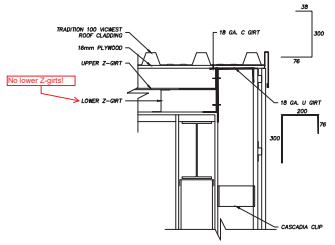

GABLE DETAIL
SCALE: N.T.S.

NO.	REVISION	DATE
1	ISSUED FOR CLIENT REVIEW	JUNE 22, 2018
2	ISSUED FOR CONSTRUCTION	JULY 3, 2018
3	RE-ISSUED FOR CONSTRUCTION	JULY 13, 2018
4	RE-ISSUED FOR CONSTRUCTION	SEPT. 06, 2018
5		
6		
7		

NOTES:
CONTRACTOR SHALL CHECK AND VERIFY ALL DIMENSIONS AND BE RESPONSIBLE FOR REPORTING ALL DISCREPANCIES TO OWNER AND/OR CONSULTANT PRIOR TO TENDER CLOSING.

LATEST APPROVED DRAWINGS ONLY TO BE USED FOR CONSTRUCTION.

PRINTS ARE NOT TO BE SCALED.

ALL DIMENSIONS INDICATED ARE IN MILLIMETRES (mm) UNLESS OTHER WISE NOTED.

KEY PLAN:

PERMIT TO PRACTICE
Concentric Associates International Inc.
Signature
Date 09/06/2018
PERMIT NUMBER: P 492
The Association of Professional Engineers, Geologists and Geophysicists of the NWT / NU

S.T. PARKER
LICENSEE
L0060/2014
NT/NU

CONCENTRIC
LONDON Toll Free 1-866-919-4531
OTTAWA Toll Free 1-866-919-4530
IQALUIT Toll Free 1-866-919-4531
SASKATOON Toll Free 1-866-919-8899
WINNIPEG Toll Free 1-866-919-4531
TORONTO Tel. 1-647-351-0095
COQUITLAM Toll Free 1-866-919-4531

CLIENT NAME:
KUDLIK CONSTRUCTION

PROJECT ADDRESS:
IQALUIT, NUNAVUT

PROJECT NAME:
IQALUIT WASTEWATER TREATMENT PLANT UPGRADE

DRAWING TITLE:
GENERAL NOTES, TABLES, & TYPICAL DETAILS

DESIGN:	RBN	SCALE:	AS SHOWN
DRAWN:	BHR	DATE:	JUNE 2018
APPVD:	STP	FILE No:	18-7804

SHEET No.
S0.0

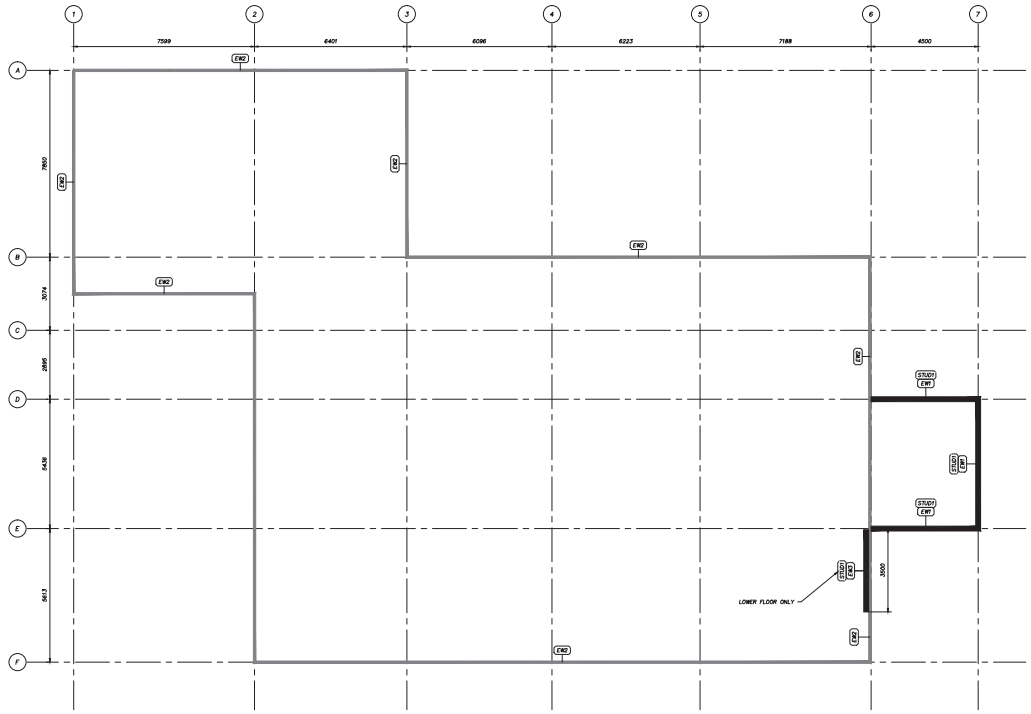

LOWER FLOOR PLAN

SCALE: 1:75

LEGEND:

- EW1 EXTERIOR WALL TYPE 1
- EW2 EXTERIOR WALL TYPE 2
- EW3 EXTERIOR WALL TYPE 3
- STUD1 203mm STEEL STUDS @ 400mm O/C

NO.	REVISION	DATE
1	ISSUED FOR CLIENT REVIEW	JUNE 22, 2018
2	ISSUED FOR CONSTRUCTION	JULY 3, 2018
3	RE-ISSUED FOR CONSTRUCTION	JULY 13, 2018
4	RE-ISSUED FOR CONSTRUCTION	SEPT. 06, 2018
5		
6		
7		

NOTES:

CONTRACTOR SHALL CHECK AND VERIFY ALL DIMENSIONS AND BE RESPONSIBLE FOR REPORTING ALL DISCREPANCIES TO OWNER AND/OR CONSULTANT PRIOR TO TENDER CLOSING.

LATEST APPROVED DRAWINGS ONLY TO BE USED FOR CONSTRUCTION.

PRINTS ARE NOT TO BE SCALED.

ALL DIMENSIONS INDICATED ARE IN MILLIMETRES (mm) UNLESS OTHER WISE NOTED.

KEY PLAN:

PERMIT TO PRACTICE
Concentric Associates International Inc.
Signature
Date 09/06/2018
PERMIT NUMBER: P 492
The Association of Professional Engineers, Geologists and Geophysicists of the NWT / NU

NORTHWEST TERRITORIES PROFESSIONAL ENGINEER
S.T. PARKER
LICENSEE
NT / NU

CONCENTRIC
LONDON Toll Free 1-866-919-4531
OTTAWA Toll Free 1-866-919-4530
IQALUIT Toll Free 1-866-919-4531
SASKATOON Toll Free 1-866-919-8899
WINNIPEG Toll Free 1-866-919-4531
TORONTO Tel. 1-647-351-0095
COQUITLAM Toll Free 1-866-919-4531

CLIENT NAME:
KUDLIK CONSTRUCTION

PROJECT ADDRESS:
IQALUIT, NUNAVUT

PROJECT NAME:
IQALUIT WASTEWATER TREATMENT PLANT UPGRADE

DRAWING TITLE:
LOWER FLOOR PLAN

DESIGN:	KBH	SCALE:	AS SHOWN
DRAWN:	BHR	DATE:	JUNE 2018
APPD'D:	STP	FILE No:	16-7804

SHEET No.
S1.0

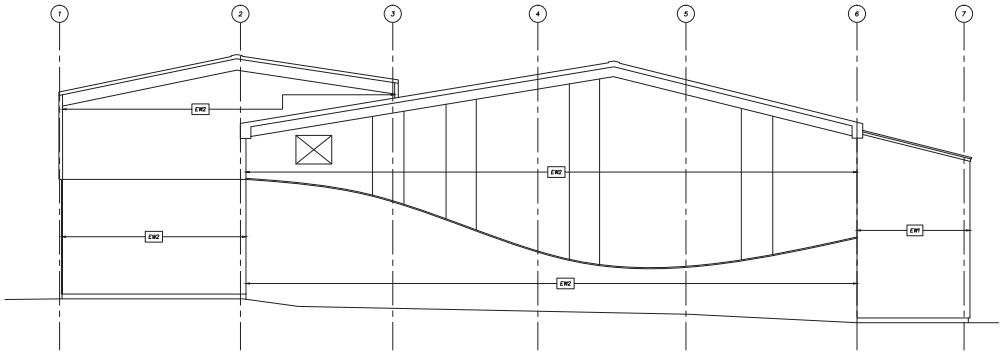

WEST ELEVATION

SCALE: 1:75

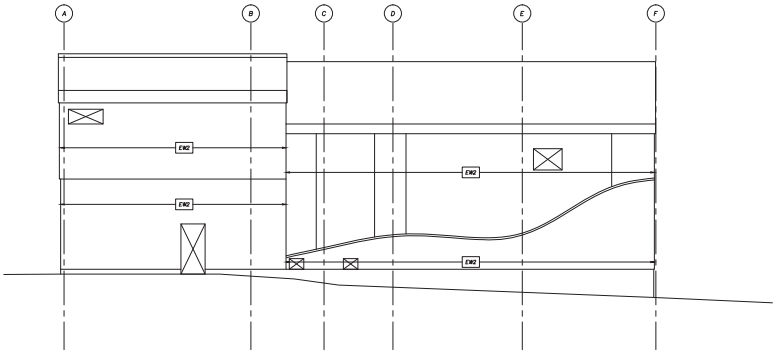

NORTH ELEVATION

SCALE: 1:75

NO.	REVISION	DATE
1	ISSUED FOR CLIENT REVIEW	JUNE 22, 2018
2	ISSUED FOR CONSTRUCTION	JULY 3, 2018
3	RE-ISSUED FOR CONSTRUCTION	JULY 13, 2018
4	RE-ISSUED FOR CONSTRUCTION	SEPT. 06, 2018
5		
6		
7		

NOTES:

CONTRACTOR SHALL CHECK AND VERIFY ALL DIMENSIONS AND BE RESPONSIBLE FOR REPORTING ALL DISCREPANCIES TO OWNER AND/OR CONSULTANT PRIOR TO TENDER CLOSING.

LATEST APPROVED DRAWINGS ONLY TO BE USED FOR CONSTRUCTION.

PRINTS ARE NOT TO BE SCALED.

ALL DIMENSIONS INDICATED ARE IN MILLIMETRES (mm) UNLESS OTHER WISE NOTED.

KEY PLAN:

PERMIT TO PRACTICE
Concentric Associates International Inc.
Signature
Date 09/06/2018
PERMIT NUMBER: P 492
The Association of Professional Engineers, Geologists and Geophysicists of the NWT / NU

PROFESSIONAL ENGINEER
S.T. PARKER
LICENSEE
NT / NU

CONCENTRIC
LONDON Toll Free 1-866-919-4531
OTTAWA Toll Free 1-866-919-4530
IQALUIT Toll Free 1-866-919-4531
SASKATOON Toll Free 1-866-919-8899
WINNIPEG Toll Free 1-866-919-4531
TORONTO Tel. 1-647-351-0095
COQUITLAM Toll Free 1-866-919-4531

CLIENT NAME:

KUDLIK CONSTRUCTION

PROJECT ADDRESS:

IQALUIT, NUNAVUT

PROJECT NAME:

IQALUIT WASTEWATER TREATMENT PLANT UPGRADE

DRAWING TITLE:

EXTERIOR CLADDING ELEVATIONS

DESIGN:	RBN	SCALE:	AS SHOWN
DRAWN:	BHR	DATE:	JUNE 2018
APPVD:	STP	FILE No:	16-7804

SHEET No.

S2.0

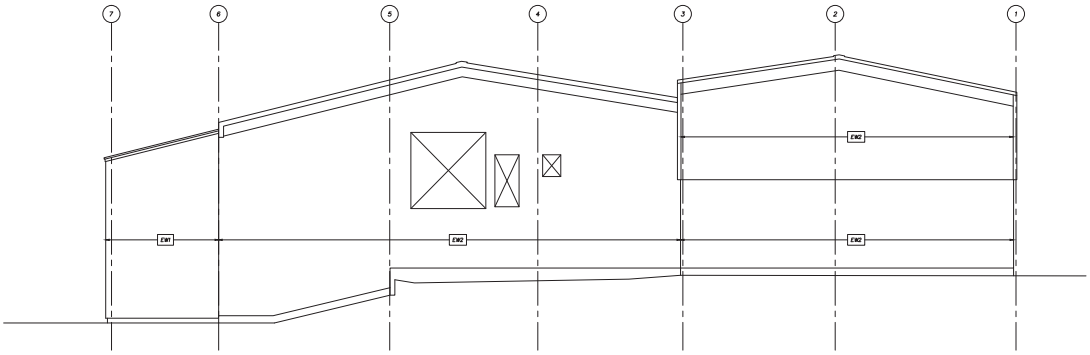

EAST ELEVATION

SCALE: 1:75

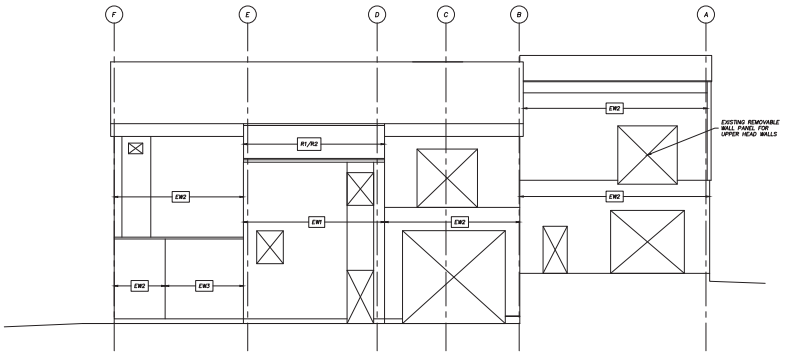

SOUTH ELEVATION

SCALE: 1:75

NO.	REVISION	DATE
1	ISSUED FOR CLIENT REVIEW	JUNE 22, 2018
2	ISSUED FOR CONSTRUCTION	JULY 3, 2018
3	RE-ISSUED FOR CONSTRUCTION	JULY 13, 2018
4	RE-ISSUED FOR CONSTRUCTION	SEPT. 06, 2018
5		
6		
7		

NOTES:

CONTRACTOR SHALL CHECK AND VERIFY ALL DIMENSIONS AND BE RESPONSIBLE FOR REPORTING ALL DISCREPANCIES TO OWNER AND/OR CONSULTANT PRIOR TO TENDER CLOSING.

LATEST APPROVED DRAWINGS ONLY TO BE USED FOR CONSTRUCTION.

PRINTS ARE NOT TO BE SCALED.

ALL DIMENSIONS INDICATED ARE IN MILLIMETRES (mm) UNLESS OTHER WISE NOTED.

KEY PLAN:

PERMIT TO PRACTICE
Concentric Associates International Inc.
Signature
Date 09/06/2018
PERMIT NUMBER: P 492
The Association of Professional Engineers, Geologists and Geophysicists of the NWT / NU

ASSOCIATION OF PROFESSIONAL ENGINEERS GEOLOGISTS AND GEOPHYSICISTS OF THE NWT AND NUNAVUT
S.T. PARKER
LICENSEE
NWT/NU

CONCENTRIC
LONDON Toll Free 1-866-919-4531
OTTAWA Toll Free 1-866-919-4530
IQALUIT Toll Free 1-866-919-4531
SASKATOON Toll Free 1-866-919-8899
WINNIPEG Toll Free 1-866-919-4531
TORONTO Tel. 1-647-351-0095
COQUITLAM Toll Free 1-866-919-4531

CLIENT NAME:
KUDLIK CONSTRUCTION

PROJECT ADDRESS:
IQALUIT, NUNAVUT

PROJECT NAME:
IQALUIT WASTEWATER TREATMENT PLANT UPGRADE

DRAWING TITLE:
EXTERIOR CLADDING ELEVATIONS

DESIGN:	RBN	SCALE:	AS SHOWN
DRAWN:	BHR	DATE:	JUNE 2018
APPVD:	STP	FILE No:	16-7804

SHEET No.
S2.1

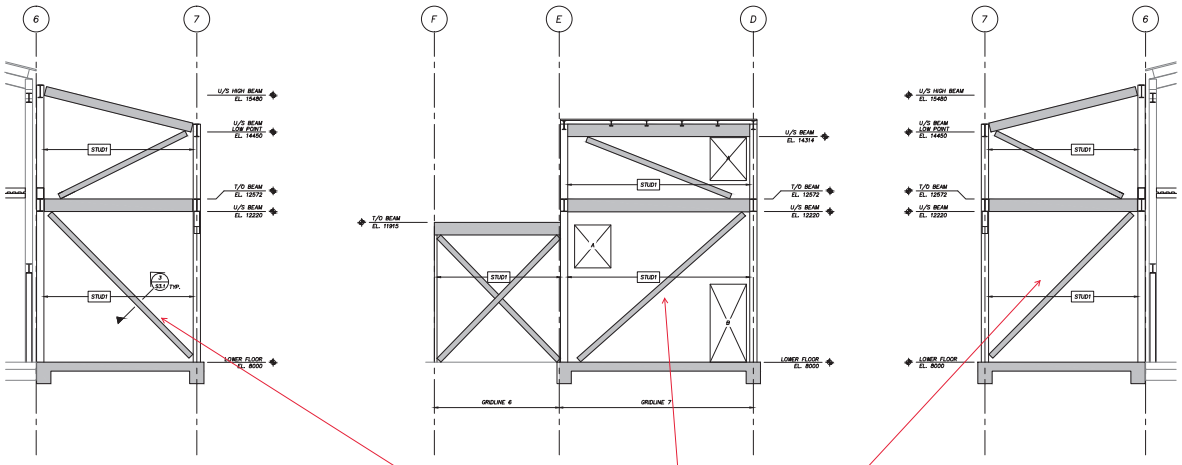

ELEVATION @ GRIDLINE E

SCALE: 1:50

ELEVATION @ GRIDLINE 6 & 7

SCALE: 1:50

ELEVATION @ GRIDLINE D

SCALE: 1:50

Wall framing shall be coordinated with exact bracing locations shown on approved primary structure shop drawings.

NO.	REVISION	DATE
1	ISSUED FOR CLIENT REVIEW	JUNE 22, 2018
2	ISSUED FOR CONSTRUCTION	JULY 3, 2018
3	RE-ISSUED FOR CONSTRUCTION	JULY 13, 2018
4	RE-ISSUED FOR CONSTRUCTION	SEPT. 06, 2018
5		
6		
7		

NOTES:

CONTRACTOR SHALL CHECK AND VERIFY ALL DIMENSIONS AND BE RESPONSIBLE FOR REPORTING ALL DISCREPANCIES TO OWNER AND/OR CONSULTANT PRIOR TO TENDER CLOSING.

LATEST APPROVED DRAWINGS ONLY TO BE USED FOR CONSTRUCTION.

PRINTS ARE NOT TO BE SCALED.

ALL DIMENSIONS INDICATED ARE IN MILLIMETRES (mm) UNLESS OTHER WISE NOTED.

KEY PLAN:

PERMIT TO PRACTICE
Concentric Associates International Inc.
Signature
Date 09/06/2018
PERMIT NUMBER: P 492
The Association of Professional Engineers, Geologists and Geophysicists of the NWT / NU

NORTHWEST TERRITORIES PROFESSIONAL ENGINEER
S.T. PARKER
LICENSEE
NT / NU

CONCENTRIC
LONDON Toll Free 1-866-919-4531
OTTAWA Toll Free 1-866-919-4530
IQALUIT Toll Free 1-866-919-4531
SASKATOON Toll Free 1-866-919-8899
WINNIPEG Toll Free 1-866-919-4531
TORONTO Tel. 1-647-351-0095
COQUITLAM Toll Free 1-866-919-4531

CLIENT NAME:

KUDLIK CONSTRUCTION

PROJECT ADDRESS:

IQALUIT, NUNAVUT

PROJECT NAME:

IQALUIT WASTEWATER TREATMENT PLANT UPGRADE

DRAWING TITLE:

STEEL ELEVATIONS

DESIGN:	RBN	SCALE:	AS SHOWN
DRAWN:	BHR	DATE:	JUNE 2018
APPD'D:	STP	FILE No:	16-7804

SHEET No.

S3.0

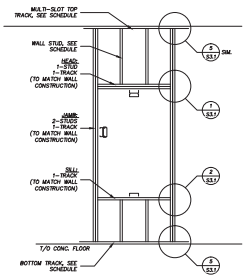

OPENING TYPE 'A'

SCALE: 1:30

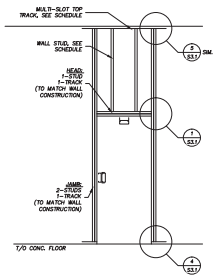

OPENING TYPE 'B'

SCALE: 1:30

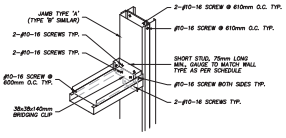

1 S3.1 TYPICAL HEADER CONNECTION

SCALE: 1:10

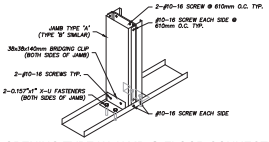

5 S3.1 OPENING TYPE 'A' JAMB @ FLOOR CONNECTION

SCALE: 1:10

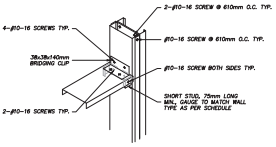

2 S3.1 TYPICAL SILL CONNECTION

SCALE: 1:10

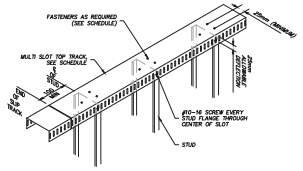

6 S3.1 WALL STUDS TO SLOTTED TRACK @ TOP OF STUD

SCALE: 1:10

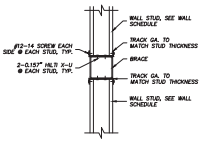

3 S3.1 TYPICAL WALL STUD @ BRACE CONNECTION

SCALE: 1:10

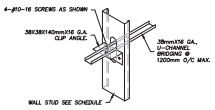

1 S3.1 TYPICAL BRIDGING CONNECTION

SCALE: 1:10

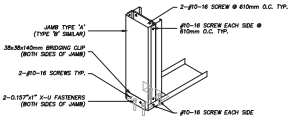

4 S3.1 OPENING TYPE 'B' JAMB @ FLOOR CONNECTION

SCALE: 1:10

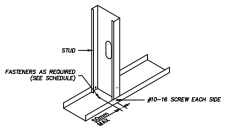

8 S3.1 TYPICAL WALL STUD TO TRACK CONNECTION

SCALE: 1:10

NO.	REVISION	DATE
1	ISSUED FOR CLIENT REVIEW	JUNE 22, 2018
2	ISSUED FOR CONSTRUCTION	JULY 3, 2018
3	RE-ISSUED FOR CONSTRUCTION	JULY 13, 2018
4	RE-ISSUED FOR CONSTRUCTION	SEPT. 06, 2018
5		
6		
7		

NOTES:

CONTRACTOR SHALL CHECK AND VERIFY ALL DIMENSIONS AND BE RESPONSIBLE FOR REPORTING ALL DISCREPANCIES TO OWNER AND/OR CONSULTANT PRIOR TO TENDER CLOSING.

LATEST APPROVED DRAWINGS ONLY TO BE USED FOR CONSTRUCTION.

PRINTS ARE NOT TO BE SCALED.

ALL DIMENSIONS INDICATED ARE IN MILLIMETRES (mm) UNLESS OTHER WISE NOTED.

KEY PLAN:

PERMIT TO PRACTICE
Concentric Associates International Inc.
Signature
Date 09/06/2018
PERMIT NUMBER: P 492
The Association of Professional Engineers, Geologists and Geophysicists of the NWT / NU

ASSOCIATION OF PROFESSIONAL ENGINEERS AND GEOSCIENTISTS NWT / NU
S.T. PARKER
LICENSEE
L1679
NT / NU

CONCENTRIC
LONDON Toll Free 1-866-919-4531
OTTAWA Toll Free 1-866-919-4530
IQALUIT Toll Free 1-866-919-4531
SASKATOON Toll Free 1-866-919-8899
WINNIPEG Toll Free 1-866-919-4531
TORONTO Tel. 1-647-351-0095
COQUITLAM Toll Free 1-866-919-4531

CLIENT NAME:
KUDLIK CONSTRUCTION

PROJECT ADDRESS:
IQALUIT, NUNAVUT

PROJECT NAME:
IQALUIT WASTEWATER TREATMENT PLANT UPGRADE

DRAWING TITLE:
STUD DETAILS

DESIGN:	KBN	SCALE:	AS SHOWN
DRAWN:	BHR	DATE:	JUNE 2018
APPVD:	STP	FILE No:	18-7804

SHEET No.
S3.1

SUBMITTALS IDENTIFICATION SHEET

PROJECT: Wastewater Treatment Plant Upgrade
Iqaluit, Nunavut

NUNAMI
STANTEC LIMITED

1088C Noble House
Iqaluit NU
www.stantec.com

CONTRACTOR: Kudlik Construction Ltd, Project 2018-062

Telephone: 867-979-1166

E-mail: srousseau@kudlik.biz

SUBCONTRACTOR:

Person responsible:

Telephone: E-mail:

PRODUCT SUBMITTED:

☐ As Specified

☐ Alternate

SUPPLIER or MANUFACTURER: Givesco

Person responsible: Marcel Tanguay

Telephone: E-mail: mtanguay@givesco.com

DESCRIPTION OF SUBMITTAL:

# of pages:

Reference to drawings:

Reference to specs:

Division: 03 Section: 03 35 00 – 03 35 05

REMARKS:

REVIEW AND COMMENTS (for use by Consultants):

STANTEC PROJECT #: 110126045

SUBMITTAL # STC-004 Sikaarmiek

This review by Stantec is for general conformance with the design concept of Stantec's design of the:

☐ Architectural ☐ Electrical
☑ Structural ☐ Other
☐ Mechanical

component(s) only and does not mean that Stantec has verified or approves the shop drawing(s). The Contractor remains solely responsible for the shop drawing(s) and this review by Stantec does not relieve the Contractor of the Contractor's responsibility for errors or omissions in the shop drawing(s) or for meeting all requirements of the contract documents. This review does not mean that Stantec approves the detailed design inherent in the shop drawing, responsibility for which shall remain with the Contractor submitting same, nor does this review mean that Stantec accepts any deviation of the shop drawing(s) from the contract documents. The Contractor is responsible for confirming all dimensions and correlating them at the job site, for all construction means, methods and techniques, and for coordination of construction work of all trades, including coordination of all shop drawings.

Stantec

☑ REVIEWED

☐ REVIEWED, AS NOTED

☐ REVISE AND RESUBMIT

☐ NOT REVIEWED

DATE 2018-06-26

BY pclyne

Review of this submission is for compliance with general intent of the contract. This review does not relieve the Sub-Contractor, Supplier or Manufacturer of responsibility for error or omissions in the submission or the responsibility of meeting all requirements of the contract documents. Any deviation from the contract documents initiated by the Sub-Contractor, Supplier or Manufacturer shall be at their sole risk. QUANTITIES AND DETAIL DIMENSIONS ARE THE SUB-CONTRACTORS OR SUPPLIERS RESPONSIBILITY. VERIFY DATA WITH FIELD DIMENSIONS.

SUBMITTAL TRACKING No.: **STC-004**

2018-06-26

BUILDING TRUST
CONSTRUIRE LA CONFIANCE

PRODUCT DATA SHEET
Edition 12.2017/v1
CSC Master Format™ 03 21 00
REINFORCEMENT BARS

detail 6/S504

SikaTop® Armatec-110 EpoCem®

ANTI-CORROSION COATING AND BONDING AGENT

Description

SikaTop® Armatec-110 EpoCem® is a three-component, water-based epoxy resin, anti-corrosion coating and bonding agent.

Where to Use

- **As an anti-corrosion coating for reinforcing steel:**
- For repairs to reinforced concrete where there is corrosion of the underlying reinforcement steel.
- For preventive protection of reinforcement steel in thin reinforced concrete sections.
- **As a bonding agent for use on concrete, mortar or steel:**
- For repairs to concrete using SikaTop® Plus, Sika MonoTop® and SikaRepair® patching and repair mortars.
- For bonding new concrete and mortar to old.

Advantages

- Excellent adhesion to steel and concrete.
- Acts as an effective barrier against penetration of water and chlorides.
- Non-vapour barrier.
- Contains corrosion inhibitors.
- Provides an excellent bonding coat for subsequent applications of repair mortars.
- Extended open time.
- Not affected by moisture.
- High mechanical strength.
- Premeasured, ready-to-use kits.
- May be spray-applied.
- Non-flammable.
- Solvent-free.
- Ministère des Transports du Québec (MTQ) acceptance.

Technical Data

Packaging	Small unit : 8 kg (4 L) or 17.6 lb (1.05 US gal.) Large unit : 25 kg (12.5 L) or 55 lb (3.3 US gal.)		
Colour	Component A	White liquid	
	Component B	Yellowish liquid	
	Component C	Light Grey powder	
	Components A+B+C	Dark Grey	
Yield	As bonding agent: not less than 8 kg or 4 L/6.6 m^2 (17.6 lb or 1.05 US gal./72 ft^2) As anti-corrosion coating: 8 kg or 4 L/2.3 m^2 (17.6 lb or 1.05 US gal./25 ft^2)		
Shelf Life	1 year in original, unopened packaging. Store dry at temperatures between 5 and 32 °C (41 and 89 °F).		
Components A and B	Protect from freezing. If frozen, discard.		
Component C	Protect from humidity.		
Mix Ratio	Mix entire unit (A+B+C)		
Application Time	**7 °C (44 °F)**	**30 °C (86 °F)**	
	2 h	1 h 30 min	
Contact Time	**10 °C (50 °F)**	**20 °C (68 °F)**	**30 °C (86 °F)**
	16 h	12 h	8 h

Properties at 23 °C (73 °F) and 50 % R.H.

Density	
Component A	1.1 kg/L (9.2 lb/US gal.)
Component B	1.03 kg/L (8.6 lb/US gal.)
Component C	1.25 kg/L (10.4 lb/US gal.) (dry bulk density)
Components A+B+C	2 kg/L (16.7 lb/US gal.)
Bond Strength CAN A23.2-6B	
Concrete	2-3 MPa (290-435 psi)
Steel	1-2 MPa (145-290 psi)
Bond Strength 14 days, ASTM C882*	
Wet on wet	20.7 MPa (3003 psi)
12 h open time	13.8 MPa (2002 psi)
VOC Content	< 10 g/L
Chemical Resistance	Consult Sika Canada

**ASTM C881 Specification Minimum Bond Strength 10.3 MPa (1494 psi). Open time (12 hrs) between application of SikaTop® Armatec-110 EpoCem® and placement of new concrete or repair mortar.*

Product properties are typically averages, obtained under laboratory conditions. Reasonable variations can be expected on-site due to local factors, including environment, preparation, application, curing and test methods.

HOW TO USE

Surface Preparation	Remove all deteriorated concrete, dirt, oil, grease, or other bond inhibiting materials from surface. Steel surfaces must be clean and free from all traces of grease, oil, rust and calamine. Preparation work should be done by sandblasting, high-pressure waterblasting, scarifying or other appropriate mechanical means. Absorbent surfaces must be saturated surface dry (SSD) with no standing water during application.
Mixing	Shake components A and B vigorously before opening. Pour both liquids into a suitable mixing pail and mix for 30 seconds. Add component C slowly while continuing to stir the mixture. Mix mechanically for three (3) minutes, using a low-speed drill (300 - 450 rpm) and *Jiffy* mixer in order to entrain as little air as possible.
Application	Anti-corrosion coating - Apply coating approx. 0.5 - 1 mm (20 - 40 mils) thick on cleaned and de-rusted reinforcement steel using a stiff paint brush, roller or spray gun. Be sure to coat the underside of the totally exposed steel. Let dry for 2 to 3 hours [ambient temperature of 20 °C (68 °F)] before applying a second coat of similar thickness. Let dry for a similar period of time before applying patching mortar to the repair. In the course of application, some of the coating material will inevitably be deposited on the surrounding concrete, but this has no detrimental effect on the finished repair. Bonding agent for repair mortar or concrete - Ensure that the prepared substrate is saturated surface dry (SSD), then apply a bonding coat no less than 0.5 mm (20 mils) thick, using a paint brush, roller or suitable spray gun. For best results, work the bonding slurry well into the substrate to ensure complete coverage of all surface irregularities. Freshly mixed patching mortar or concrete can be applied immediately on SikaTop® Armatec-110 EpoCem® within the contact time. 8 hours at 30 °C (86 °F), 12 hours at 20 °C (68 °F), 16 hours at 10 °C (50 °F). After this contact time, the adhesion characteristics will be reduced.
Clean Up	Use water to remove uncured material from tools and mixing equipment. Cured, product can only be removed mechanically.
Limitations	▪ Do not use as a bonding agent with set accelerated mortars, e.g. SikaSet®-45, SikaQuick®-1000, SikaQuick®-2500, and SikaTop®-123 Plus Winter Grade. Consult Sika Canada. ▪ Minimum application temperature (ambient and substrate): 7 °C (44 °F). ▪ Maximum substrate temperature: 30 °C (86 °F). ▪ Under no circumstances should water be added to the mix.
Caution	▪ Component A - Irritant - Contains epoxy resins. ▪ Component B - Irritant - Contains amines. ▪ Component C - Irritant - Contains cement and silica. ▪ Product is a strong sensitizer. Avoid eye, skin, and respiratory contact. Use of safety goggles, chemical- resistant gloves and a NIOSH/MSHA organic vapour respirator is recommended. Avoid breathing vapours and dust. Use adequate ventilation. Consult product label for additional information.
First Aid	In case of skin contact, wash with soap and water. For eye contact, flush immediately with plenty of water for at least 15 minutes. Contact a physician. For respiratory problems, transport victim to fresh air. Remove contaminated clothing and wash before re-use.
Health and Safety Information	For information and advice on the safe handling, storage and disposal of chemical products, users should refer to the most recent SAFETY DATA SHEET containing physical, ecological, toxicological and other safety-related data. KEEP OUT OF REACH OF CHILDREN FOR INDUSTRIAL USE ONLY

The Information, and in particular, the recommendations relating to the application and end-use of Sika products, are given in good faith based on Sika's current knowledge and experience of the products when properly stored, handled and applied under normal conditions, within their shelflife. In practice, the differences in materials, substrates and actual site conditions are such that no warranty in respect of merchantability or of fitness for a particular purpose, nor any liability arising out of any legal relationship whatsoever, can be inferred either from this information, or from any recommendations, or from any other advice offered. The information contained herein does not relieve the user of the products from testing them for the intended application and purpose. The proprietary rights of third parties must be observed. All orders are accepted subject to our current terms of sale and delivery. Users must always refer to the most recent issue of the local Product Data Sheet for the product concerned, copies of which will be supplied on request or may be downloaded from our website at: www.sika.ca

SIKA CANADA INC.
Head Office
601, avenue Delmar
Pointe-Claire, Quebec
H9R 4A9

Other locations
Toronto
Edmonton
Vancouver

1-800-933-SIKA
www.sika.ca

Certified ISO 9001 (CERT-0102780)
Certified ISO 14001 (CERT-0102791)

SUBMITTALS IDENTIFICATION SHEET

PROJECT: Wastewater Treatment Plant Upgrade
Iqaluit, Nunavut

NUNAMI
STANTEC LIMITED

1088C Noble House
Iqaluit NU
www.stantec.com

CONTRACTOR: Kudlik Construction Ltd, Project 2018-062

Telephone: 867-979-1166

E-mail: srousseau@kudlik.biz

SUBCONTRACTOR:

Person responsible:

Telephone: E-mail:

PRODUCT SUBMITTED:

☐ As Specified

☐ Alternate

SUPPLIER or MANUFACTURER: Givesco

Person responsible: Marcel Tanguay

Telephone: E-mail: mtanguay@givesco.com

DESCRIPTION OF SUBMITTAL:

# of pages:

Reference to drawings:

Reference to specs:

Division: 03 Section: _____

REMARKS:

To clean the concrete before sealer

REVIEW AND COMMENTS (for use by Consultants):

STANTEC PROJECT #: 110126045 SUBMITTAL # STC-005

This review by Stantec is for general conformance with the design concept of Stantec's design of the:

☐ Architectural ☐ Electrical
☑ Structural ☐ Other
☐ Mechanical

component(s) only and does not mean that Stantec has verified or approves the shop drawing(s). The Contractor remains solely responsible for the shop drawing(s) and this review by Stantec does not relieve the Contractor of the Contractor's responsibility for errors or omissions in the shop drawing(s) or for meeting all requirements of the contract documents. This review does not mean that Stantec approves the detailed design inherent in the shop drawing, responsibility for which shall remain with the Contractor submitting same, nor does this review mean that Stantec accepts any deviation of the shop drawing(s) from the contract documents. The Contractor is responsible for confirming all dimensions and correlating them at the job site, for all construction means, methods and techniques, and for coordination of construction work of all trades, including coordination of all shop drawings.

Stantec

☑ REVIEWED

☐ REVIEWED, AS NOTED

☐ REVISE AND RESUBMIT

☐ NOT REVIEWED

DATE 2018-06-27

BY pclyne

Review of this submission is for compliance with general intent of the contract. This review does not relieve the Sub-Contractor, Supplier or Manufacturer of responsibility for error or omissions in the submission or the responsibility of meeting all requirements of the contract documents. Any deviation from the contract documents initiated by the Sub-Contractor, Supplier or Manufacturer shall be at their sole risk. QUANTITIES AND DETAIL DIMENSIONS ARE THE SUB-CONTRACTORS OR SUPPLIERS RESPONSIBILITY. VERIFY DATA WITH FIELD DIMENSIONS.

SUBMITTAL TRACKING No.: **STC-005**

2018-06-27

PRODUCT DATA

MasterFormat: 03 05 00

W. R. MEADOWS. SEALTIGHT

NO. 353-A

APRIL 2018

ULTRITE® COATING REMOVER

DESCRIPTION

ULTRITE COATING REMOVER is an easy-to-use, soy-gel coating remover. This gel-type product effectively removes topical sealers, acrylics, latex, urethanes, enamels, some epoxies, and other single-component coatings. ULTRITE COATING REMOVER is safe, low-odor, and non-caustic.

The use of ULTRITE COATING REMOVER is the first step of a two-step coating removal process. The second step utilizes ULTRITE CLEANER from W. R. MEADOWS. ULTRITE CLEANER is used to remove the residues left from ULTRITE COATING REMOVER. For more details, refer to ULTRITE CLEANER #353-B data sheet.

USES

When properly applied, ULTRITE COATING REMOVER will remove a wide range of one-part topical coatings such as curing and sealing compounds, acrylic sealers, polyurethanes, etc. The product can be applied to a variety of surfaces, including concrete, masonry, wood, and metal. The product is ideal for use in warehouses, industrial plants, food processing plants, schools, automotive plants, parking garages, plazas, and service stations.

FEATURES/BENEFITS

- Easy to use.
- Removes many different types of coatings.
- Low odor.
- Environmentally friendly.

PACKAGING

1 Gallon (3.79 L) Units (4/Carton)
5 Gallon (18.93 L) Pails
55 Gallon (208.20 L) Drums

COVERAGE

Horizontal: 125 ft.²/gal. (3.06 m²/L)
Vertical: 75 ft.²/gal. (1.84 m²/L)
Coverage is approximate and may vary depending on coatings, concrete condition, climatic conditions, etc. Always apply to a test area first to determine actual coverage rate and softening time before full-scale application.

SHELF LIFE

When stored indoors in original, unopened containers at temperatures between 40° - 90° F (4° - 32° C), optimum performance and best use is obtained within two years of date of manufacture.

SPECIFICATIONS

- Complies with all current federal, state, and local maximum allowable VOC requirements, including EPA, CARB, LADCO, OTC Phase I and II, and SCAQMD.

TECHNICAL DATA

VOC Content: 509 g/L

APPLICATION

Application Method ... Protect vegetation from product, splash, residue, and wind drift. Apply a thick, even layer of ULTRITE COATING REMOVER on the coating being removed. On horizontal surfaces, ULTRITE COATING REMOVER can be applied by rolling, brushing, squeegee, or airless sprayer. For large projects and vertical applications, use a commercial airless sprayer with a 0.019" - 0.021" (0.48 - .53 mm) nozzle and a spray rate of at least 2500 psi (17.2 MPa). An airless sprayer is the most effective way of applying ULTRITE COATING REMOVER.

CONTINUED ON REVERSE SIDE ...

W. R. MEADOWS, INC.
P.O. Box 338 • HAMPSHIRE, IL 60140-0338
Phone: 847/214-2100 • Fax: 847/683-4544
1-800-342-5976
www.wrmeadows.com

ULTRITE COATING REMOVER must be applied 1.5 - 2 times thicker than the coating to be removed. The time needed for penetration of ULTRITE COATING REMOVER will vary depending on the type of coating and climatic conditions. Depending on type of coating, it may take up to 24 hours for proper softening and removal. A typical ASTM C309, Class B and/or ASTM C1315 sealer usually takes one hour for proper softening before removal, depending on application thickness.

The product should be kept moist once applied; do not allow product to dry. When used outdoors, cover material with 2-mil or thicker plastic to help keep the product wet and working.

Very thick and multiple-layer coatings may require a re-application of ULTRITE COATING REMOVER for proper removal.

Use a scraper to check if the coating is softened down to the surface. If not, wait longer and recheck. When the coating is completely softened, remove with a scraper, squeegee, or pressure wash. Material removed can be landfill-disposed when completely dry (no free liquids). Consideration must be given to the substrate/coating removed.

Always apply a test area prior to full scale application to determine coverage rate, suitability of the product for the coating and substrate and time needed for the coating to be removed.

Substrate surface becomes extremely slippery after removal of the softened coating and ULTRITE COATING REMOVER. Once the softened coating and ULTRITE COATING REMOVER have been removed, ULTRITE CLEANER from W. R. MEADOWS and a final water rinse should be used to clean off remaining residue. Allow surface to dry before further preparations.

PRECAUTIONS

Keep from freezing. Surface becomes extremely slippery after removal of softened coatings and ULTRITE COATING REMOVER. ULTRITE CLEANER must be used to clean the surface and help reduce adhesion failure of subsequent coatings/treatments. Prior to application of subsequent coatings and/or treatments, ensure that there are no residues left from the ULTRITE COATING REMOVER and/or ULTRITE CLEANER application.

Do not use on PVC, drywall, limestone, plastic, veneer, terrazzo tile, or rubber. ULTRITE COATNG REMOVER will destroy latex over time. After product application, rubber hoses of application equipment must be cleaned as the product will attack and damage the rubber. The product should be kept moist once applied; do not allow product to dry.

Failure to use ULTRITE CLEANER after ULTRITE COATING REMOVER will result in a hazardous, slippery surface.

ULTRITE CLEANER DIRECTIONS

APPLICATION

Surface Preparation … Scrape off ULTRITE COATING REMOVER and softened coating from the surface before cleaning with ULTRITE CLEANER.

Application Method … Protect vegetation, painted, stained and alkaline-sensitive surfaces from product, splash, residue, and wind drift. Apply ULTRITE CLEANER with a mop, broom, or sprayer. Allow the product to stay on the surface for 3-5 minutes before agitating with a brush or a mop. Rinse thoroughly with water. Using a pressure washer where possible is recommended for more effective results. Repeat the process as necessary. Do not allow the product to dry. Two rounds of cleaning is recommended for optimum results.

PRECAUTIONS

Do not dilute. Protect painted, stained, and alkaline-sensitive surfaces from ULTRITE CLEANER. Rinse well with water. Do not freeze. Product is not intended to be used by on its own – must be used in conjunction with ULTRITE COATING REMOVER.

LEED INFORMATION

May help contribute to LEED credits:

- MRc9: Construction and Demolition Waste Management

For most recent data sheet, further LEED information, and SDS, visit www.wrmeadows.com.



LIMITED WARRANTY

W. R. MEADOWS, INC. warrants at the time and place we make shipment, our material will be of good quality and will conform with our published specifications in force on the date of acceptance of the order. Read complete warranty. Copy furnished upon request.

Disclaimer

The information contained herein is included for illustrative purposes only, and to the best of our knowledge, is accurate and reliable. W. R. MEADOWS, INC. cannot however under any circumstances make any guarantee of results or assume any obligation or liability in connection with the use of this information. As W. R. MEADOWS, INC. has no control over the use to which others may put its product, it is recommended that the products be tested to determine if suitable for specific application and/or our information is valid in a particular circumstance. Responsibility remains with the architect or engineer, contractor and owner for the design, application and proper installation of each product. Specifier and user shall determine the suitability of products for specific application and assume all responsibilities in connection therewith.

© W. R. MEADOWS 2018

SUBMITTALS IDENTIFICATION SHEET

PROJECT: Wastewater Treatment Plant Upgrade
Iqaluit, Nunavut

NUNAMI
STANTEC LIMITED

1088C Noble House
Iqaluit NU
www.stantec.com

CONTRACTOR: Kudlik Construction Ltd, Project 2018-062

Telephone: 867-979-1166

E-mail: srousseau@kudlik.biz

SUBCONTRACTOR: Structure MH

Person responsible: Moise Harvey

Telephone: (418)487-8772 E-mail: structures.mh@gmail.com

PRODUCT SUBMITTED:

☑ As Specified

☐ Alternate

SUPPLIER or MANUFACTURER:

Person responsible:

Telephone: E-mail:

DESCRIPTION OF SUBMITTAL:

# of pages:

Reference to drawings:

Reference to specs:

Division: 05 Section: 05 12 23 - 05 21 00

REMARKS:

REVIEW AND COMMENTS (for use by Consultants):

STANTEC PROJECT #: 110126045 SUBMITTAL # STC-006

This review by Stantec is for general conformance with the design concept of Stantec's design of the:

☐ Architectural ☐ Electrical
☑ Structural ☐ Other
☐ Mechanical

component(s) only and does not mean that Stantec has verified or approves the shop drawing(s). The Contractor remains solely responsible for the shop drawing(s) and this review by Stantec does not relieve the Contractor of the Contractor's responsibility for errors or omissions in the shop drawing(s) or for meeting all requirements of the contract documents. This review does not mean that Stantec approves the detailed design inherent in the shop drawing, responsibility for which shall remain with the Contractor submitting same, nor does this review mean that Stantec accepts any deviation of the shop drawing(s) from the contract documents. The Contractor is responsible for confirming all dimensions and correlating them at the job site, for all construction means, methods and techniques, and for coordination of construction work of all trades, including coordination of all shop drawings.

Stantec

☑ REVIEWED

☐ REVIEWED, AS NOTED

☐ REVISE AND RESUBMIT

☐ NOT REVIEWED

DATE 2018-12-12

BY pclyne

Review of this submission is for compliance with general intent of the contract. This review does not relieve the Sub-Contractor, Supplier or Manufacturer of responsibility for error or omissions in the submission or the responsibility of meeting all requirements of the contract documents. Any deviation from the contract documents initiated by the Sub-Contractor, Supplier or Manufacturer shall be at their sole risk. QUANTITIES AND DETAIL DIMENSIONS ARE THE SUB-CONTRACTORS OR SUPPLIERS RESPONSIBILITY. VERIFY DATA WITH FIELD DIMENSIONS.

SUBMITTAL TRACKING No.: **STC-006 rev 2**

2018-12-06

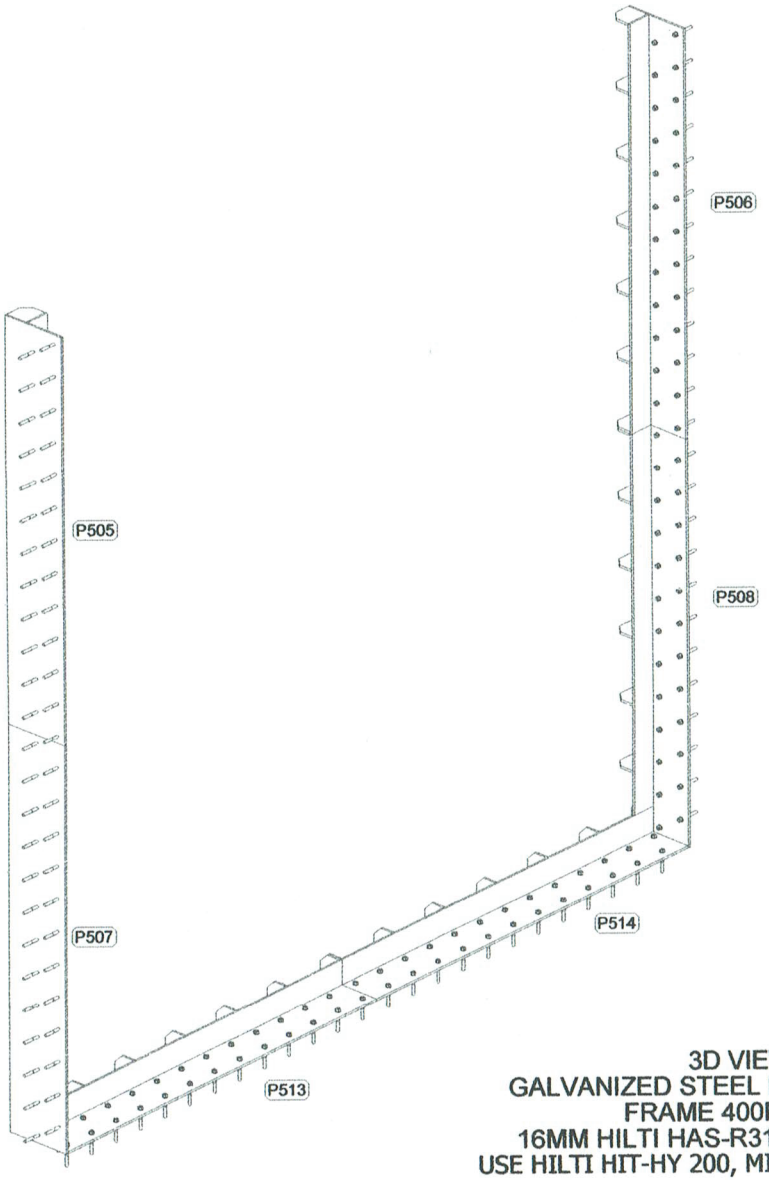

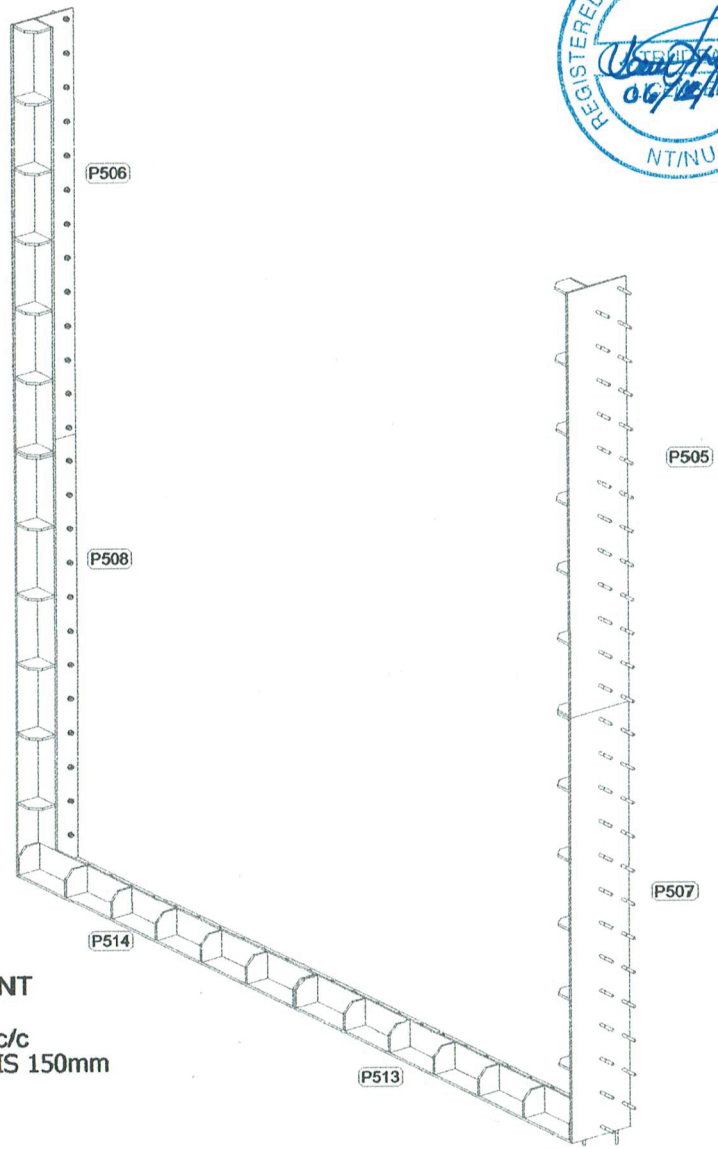

REGISTERED PROFESSIONAL ENGINEER
NT/NU

3D VIEW
GALVANIZED STEEL REINFORCEMENT
FRAME 400MM WIDE
16MM HILTI HAS-R316SS @ 200MM c/c
USE HILTI HIT-HY 200, MIN. EMBEDMENT IS 150mm

Rev.	Date	Par	Description
TQC	2018-10-01	Julie Lajoie	Tel que Construit.

Projet : Wall/Wall Anchor Rod Layout 01		
No. Projet : MH2018.0839_ST		
Détaillé par : Julie Lajoie	Trou : 13/16"Ø u/n	Client : Const. Gely
Vérifié par: Const. Gely	Soudure : E70XXELECT	No. Dessin : ST-501
STRUCTURES M.H. inc ENTREPRENEUR GÉNÉRAL	Acier :	
	Peinture:	Sequence : TQC
	Date : 2018-07-13	

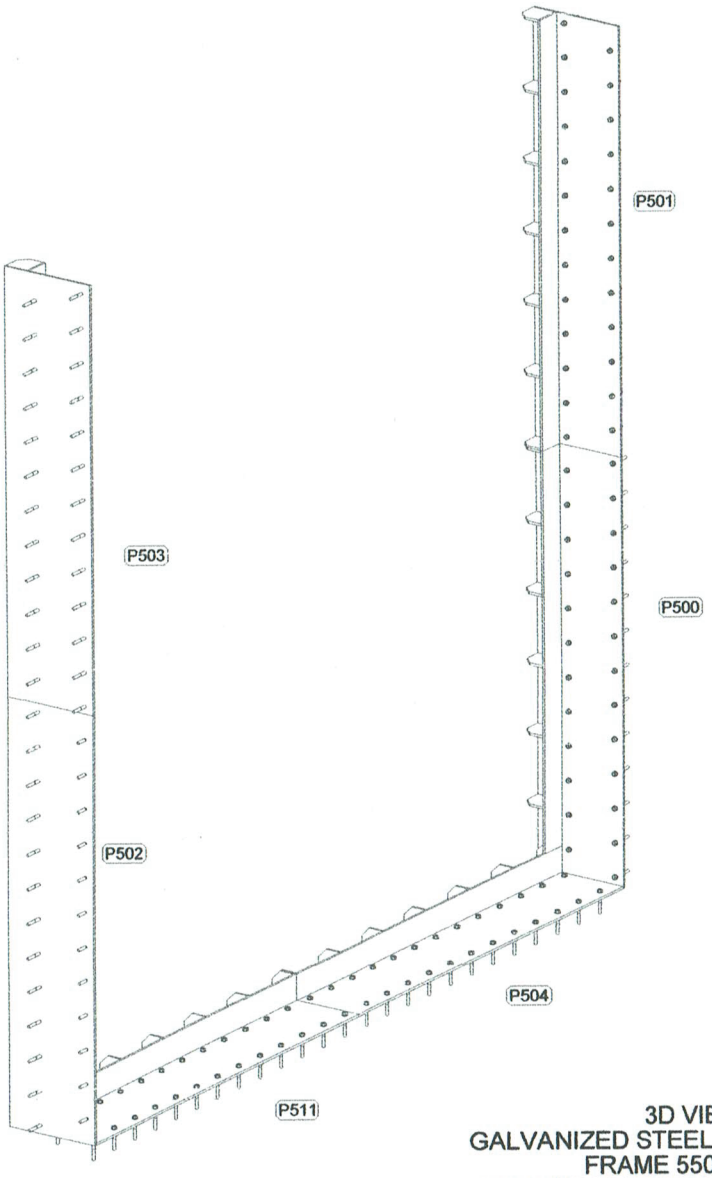

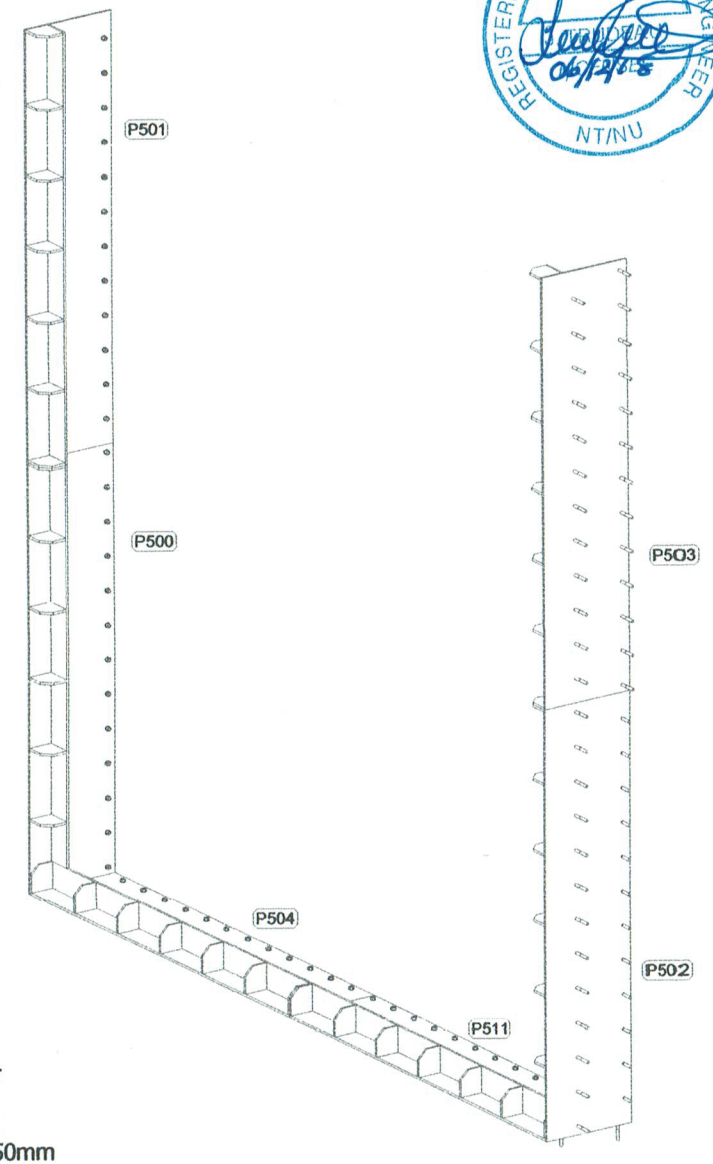

REGISTERED PROFESSIONAL ENGINEER
NT/NU

3D VIEW
GALVANIZED STEEL REINFORCEMENT
FRAME 550MM WIDE
16MM HILTI HAS-R316SS @ 200MM c/c
USE HILTI HIT-HY 200, MIN. EMBEDMENT IS 150mm

Rev.	Date	Par	Description
TQC	2018-10-01	Julie Lajoie	Tel que Construit.

Projet : Wall/Wall Anchor Rod Layout 01		
No. Projet : MH2018.0839_ST		
Détaillé par : Julie Lajoie	Trou : 13/16"Ø u/n	Client : Const. Gely
Vérifié par: Const. Gely	Soudure : E70XXELECT	No. Dessin : ST-502
STRUCTURES M.H. inc. ENTREPRENEUR GÉNÉRAL	Acier :	
	Peinture:	Sequence : TQC
	Date : 2018-09-09	

Marque	Quantité	Description	Longueur	Nuance	Finition	Poids	Poids total
P500	2	Plat de renforcement					
p5008	2	PLT13x550x2438.5	2438.5	G40.21	Galvanisé	301.740	603.480
p5002	2	PLT13x150x2275.5	2275.5	G40.21	Galvanisé	76.792	153.584
p5000	12	PLT13x137x150	150.0	G40.21	Galvanisé	4.331	51.969
	16					404.517	809.033
	16						809.033

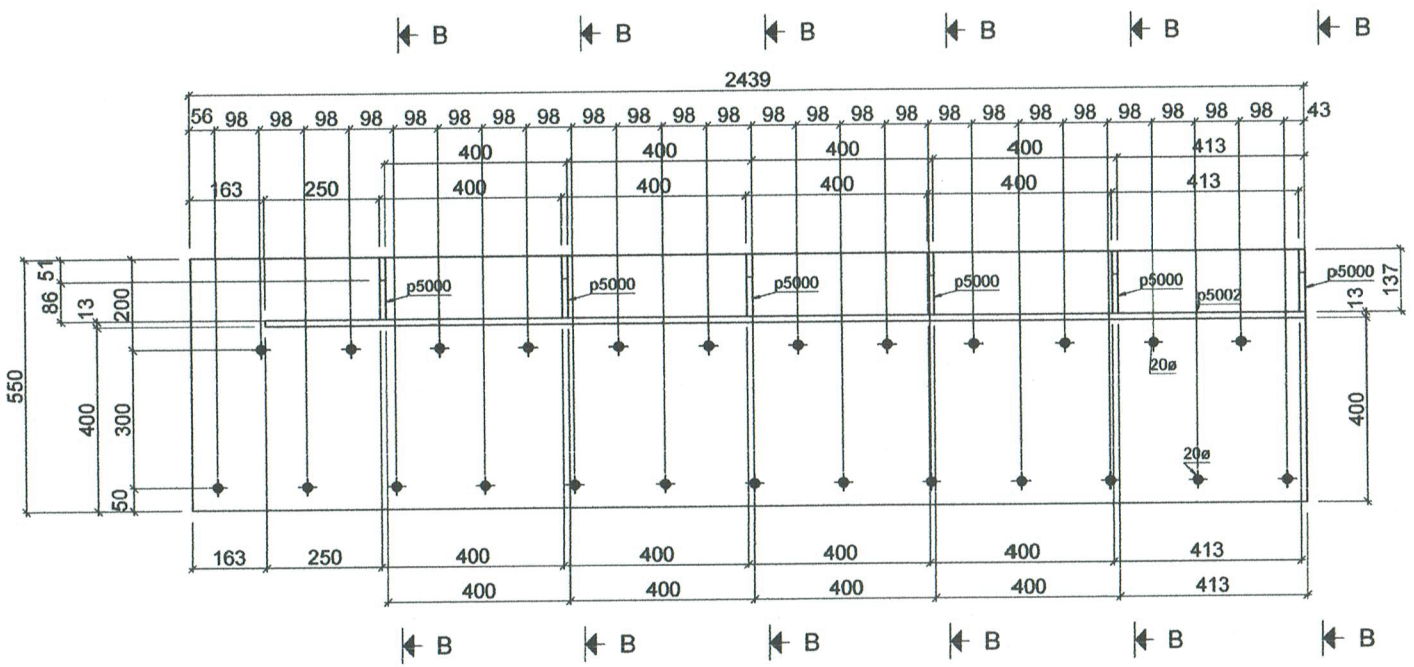

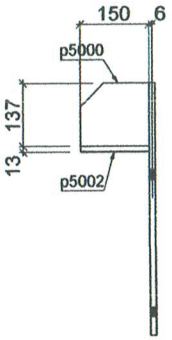

Section B - B

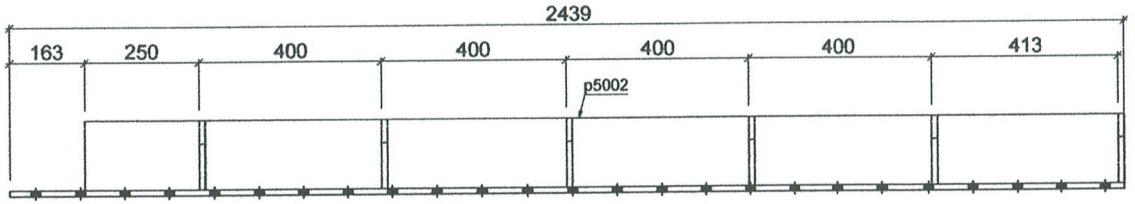

2 - P500 PLT13x550x2438.5

REGISTERED PROFESSIONAL ENGINEER
NT/NU

Rev.	Date	Par	Description
TQC	2018-10-01	Julie Lajoie	Tel que Construit.

Projet : Wall/Wall Anchor Rod Layout 01
No. Projet : MH2018.0839_ST

Statut : Approuvé	Commentaire :	
Détaillé par : Julie Lajoie	Trou : 13/16"Ø u/h	Client : Const. Gely
Vérifié par: Const. Gely	Soudure : E70XXELECT	No. Dessin : P500
STRUCTURES M.H. inc. ENTREPRENEUR GÉNÉRAL	Acier : G40.21	
	Peinture: Galvanisé	Sequence : TQC
	Date : 2018-09-07	

Marque	Quantité	Description	Longueur	Nuance	Finition	Poids	Poids total
P501	2	Plat de renforcement					
p5007	2	PLT13x550x2438.5	2438.5	G40.21	Galvanisé	301.740	603.480
p5003	2	PLT13x150x2438.5	2438.5	G40.21	Galvanisé	82.293	164.585
p5000	14	PLT13x137x150	150.0	G40.21	Galvanisé	4.331	60.631
	18					414.348	828.696
	18						828.696

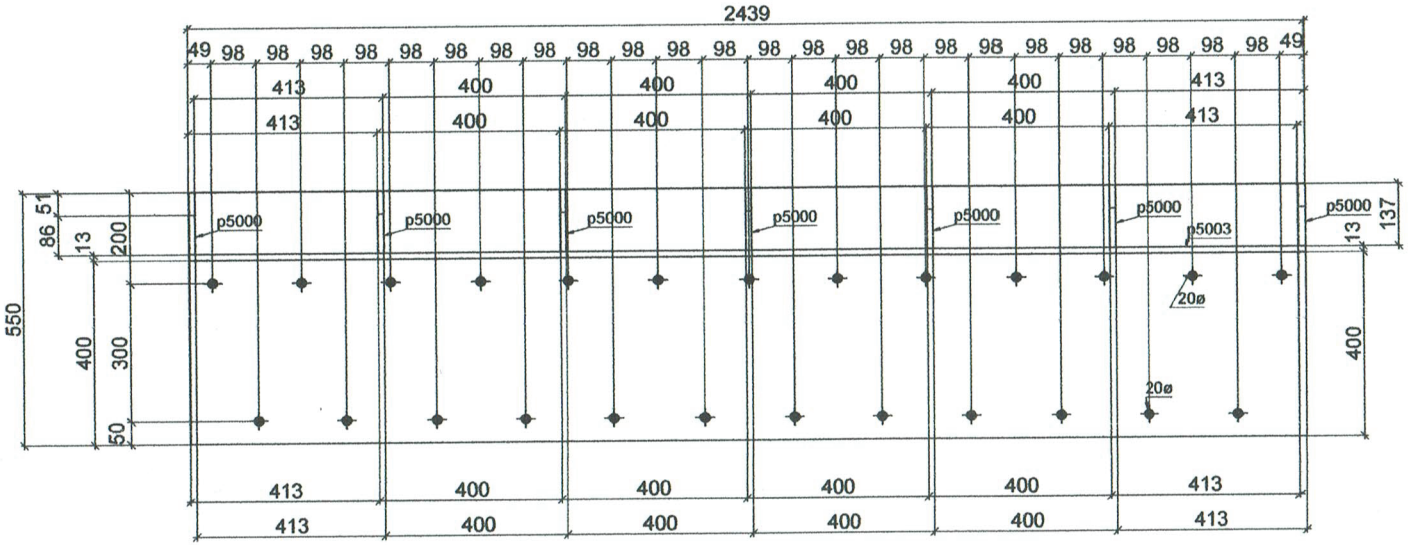

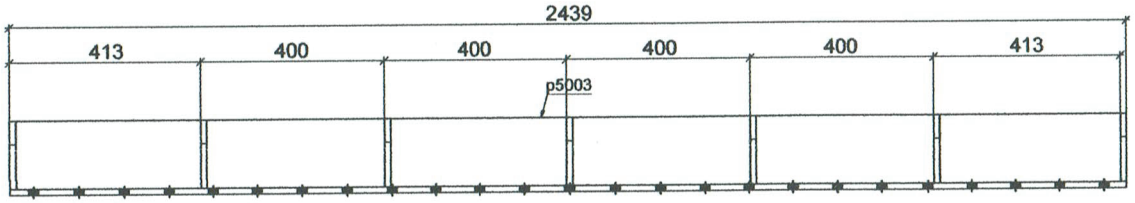

2 - P501 PLT13x550x2438.5

REGISTERED PROFESSIONAL ENGINEER
NT/NU

Rev.	Date	Par	Description
TQC	2018-10-01	Julie Lajoie	Tel que Construit.

Projet : Wall/Wall Anchor Rod Layout 01
No. Projet : MH2018.0839_ST

Statut : Approuvé	Commentaire :	
Détaillé par : Julie Lajoie	Trou : 13/16"Ø u/n	Client :Const. Gely
Vérifié par: Const. Gely	Soudure : E70XXELECT	No. Dessin : P501
STRUCTURES M.H. inc. ENTREPRENEUR GÉNÉRAL	Acier : G40.21	
	Peinture: Galvanisé	Sequence : TQC
	Date : 2018-09-07	

Marque	Quantité	Description	Longueur	Nuance	Finition	Poids	Poids total
P502	2	Plat de renforcement					
p5007	2	PLT13x550x2438.5	2438.5	G40.21	Galvanisé	301.740	603.480
p5002	2	PLT13x150x2275.5	2275.5	G40.21	Galvanisé	76.792	153.584
p5000	12	PLT13x137x150	150.0	G40.21	Galvanisé	4.331	51.969
	16					404.517	809.033
	16						809.033

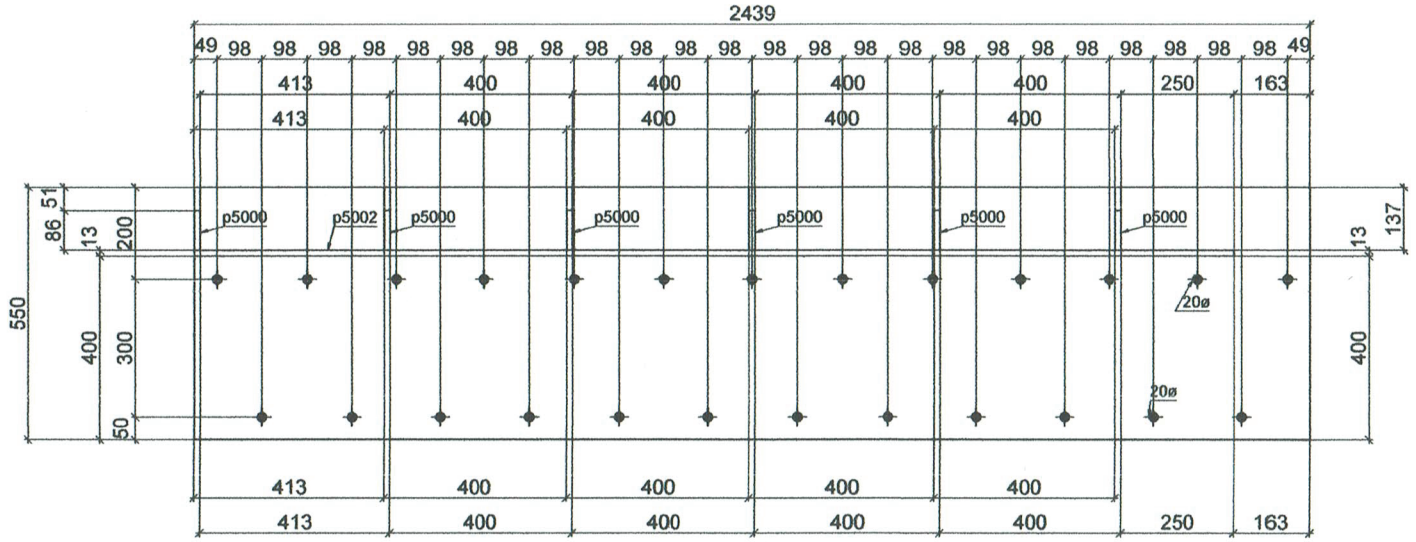

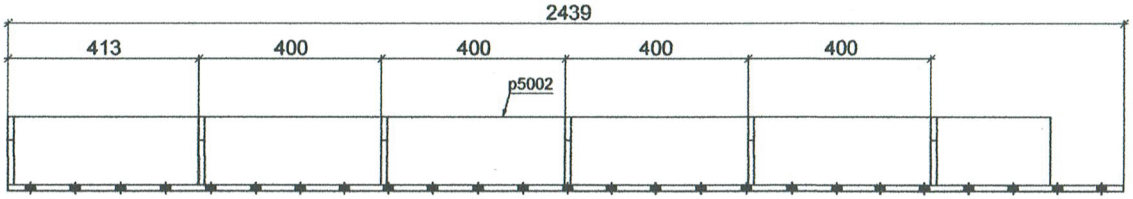

2 - P502 PLT13x550x2438.5

REGISTERED PROFESSIONAL ENGINEER
NT/NU

Rev.	Date	Par	Description
TQC	2018-10-01	Julie Lajoie	Tel que Construit.

Projet : Wall/Wall Anchor Rod Layout 01
No. Projet : MH2018.0839_ST

Statut : Approuvé	Commentaire :	
Détaillé par : Julie Lajoie	Trou : 13/16"Ø u/h	Client : Const. Gely
Vérifié par: Const. Gely	Soudure : E70XXELECT	No. Dessin : P502
STRUCTURES M.H. inc. ENTREPRENEUR GÉNÉRAL	Acier : G40.21	
	Peinture: Galvanisé	Sequence : TQC
	Date : 2018-09-07	

Marque	Quantité	Description	Longueur	Nuance	Finition	Poids	Poids total
P503	2	Plat de renforcement					
p5008	2	PLT13x550x2438.5	2438.5	G40.21	Galvanisé	301.740	603.480
p5003	2	PLT13x150x2438.5	2438.5	G40.21	Galvanisé	82.293	164.585
p5000	14	PLT13x137x150	150.0	G40.21	Galvanisé	4.331	60.631
	18					414.348	828.696
	18						828.696

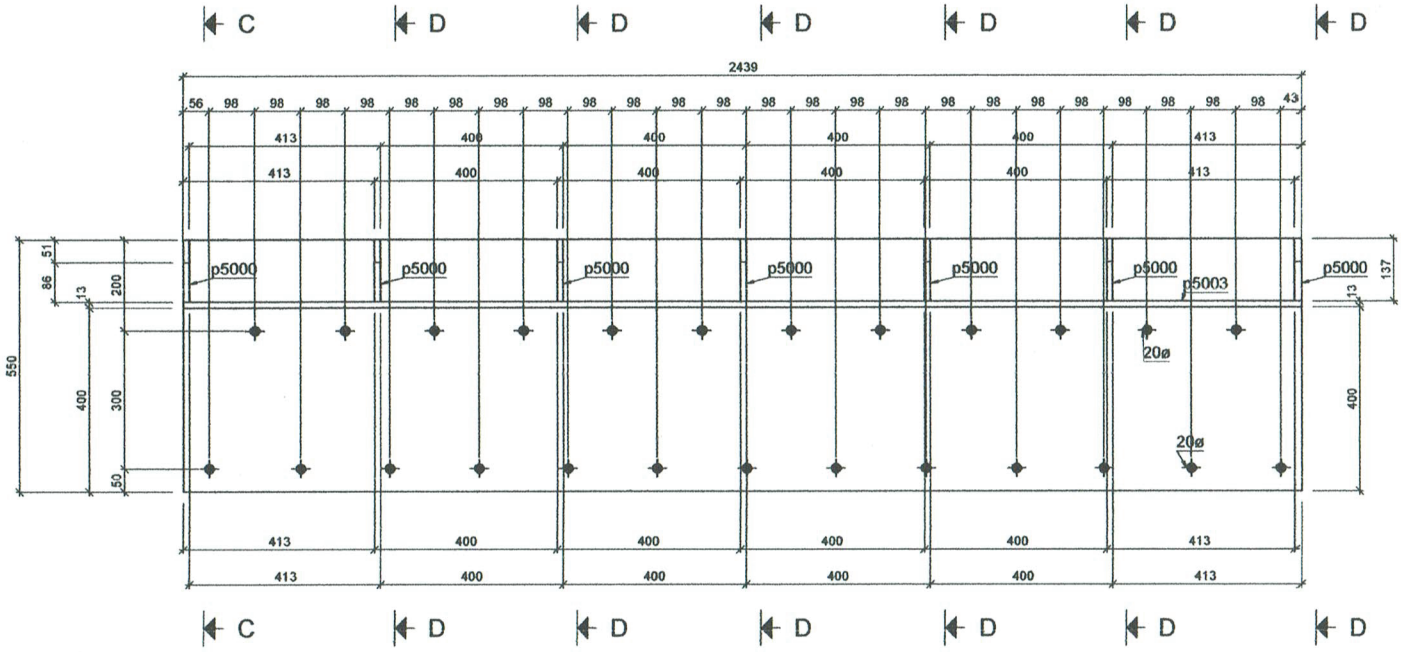

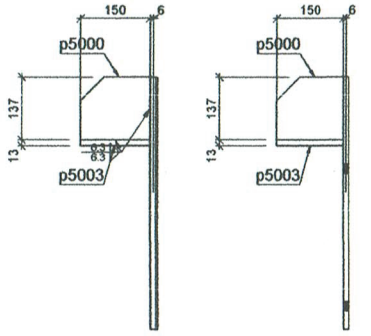

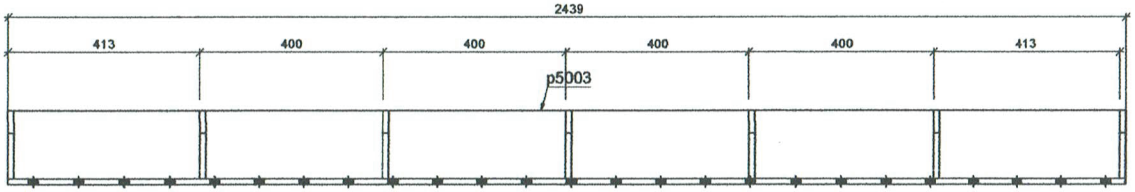

2 - P503 PLT13x550x2438.5

REGISTERED PROFESSIONAL ENGINEER
TRUDEAU
NT/NU

Rev.	Date	Par	Description
TQC	2018-10-01	Julie Lajoie	Tel que Construit.

Projet : Wall/Wall Anchor Rod Layout 01
No. Projet : MH2018.0839_ST

Statut : Approuvé	Commentaire :	
Détaillé par : Julie Lajoie	Trou : 13/16"Ø u/n	Client : Const. Gely
Vérifié par: Const. Gely	Soudure : E70XXELECT	No. Dessin : P503
STRUCTURES M.H. inc. ENTREPRENEUR GÉNÉRAL	Acier : G40.21	
	Peinture: Galvanisé	Sequence : TQC
	Date : 2018-09-07	

Marque	Quantité	Description	Longueur	Nuance	Finition	Poids	Poids total
P504	2	Plat de renforcement					
p5005	2	PLT13x550x2442	2442.0	G40.21	Galvanisé	302.173	604.346
p5001	2	PLT13x150x2442	2442.0	G40.21	Galvanisé	82.411	164.822
p5000	14	PLT13x137x150	150.0	G40.21	Galvanisé	4.331	60.631
	18					414.899	829.799
	18						829.799

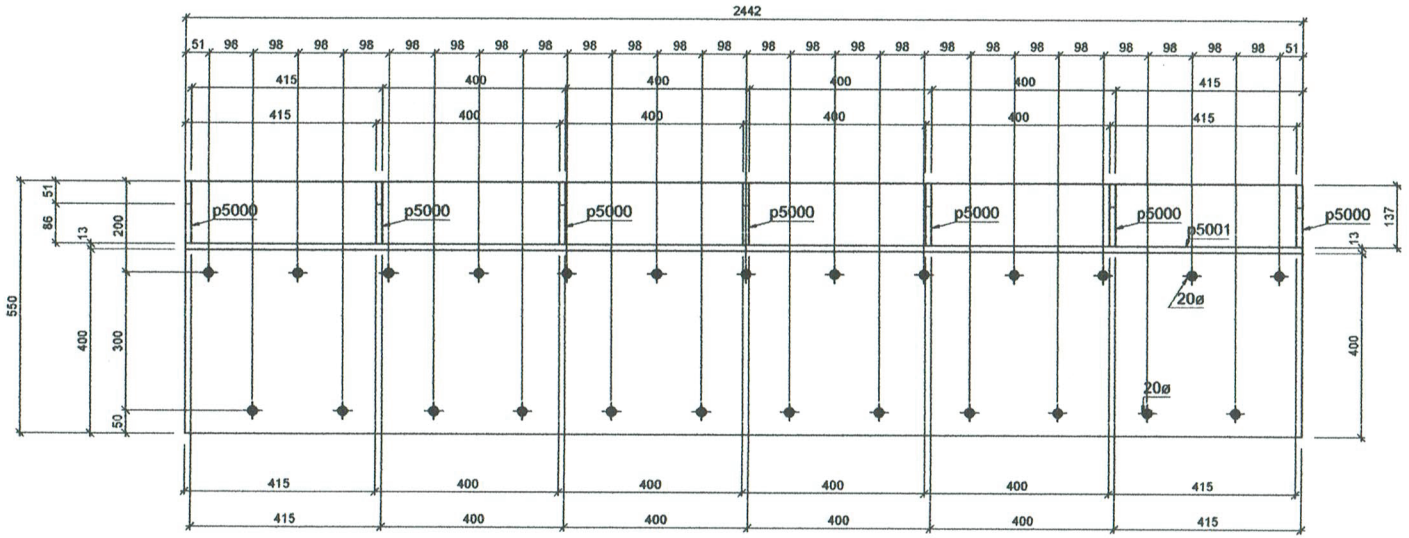

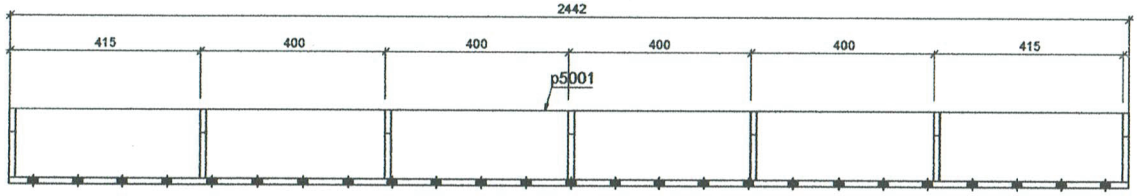

2 - P504 PLT13x550x2442

REGISTERED PROFESSIONAL ENGINEER
NT/NU

Rev.	Date	Par	Description
TQC	2018-10-01	Julie Lajoie	Tel que Construit.

Projet : Wall/Wall Anchor Rod Layout 01

No. Projet : MH2018.0839_ST

Statut : Approuvé	Commentaire :	
Détaillé par : Julie Lajoie	Trou : 13/16"Ø u/n	Client :Const. Gely
Vérifié par: Const. Gely	Soudure : E70XXELECT	No. Dessin : P504
STRUCTURES M.H. inc. ENTREPRENEUR GÉNÉRAL	Acier : G40.21	
	Peinture: Galvanisé	Sequence : TQC
	Date : 2018-09-07	

Marque	Quantité	Description	Longueur	Nuance	Finition	Poids	Poids total
P505	2	Plat de renforcement					
p5004	2	PLT13x400x2438.5	2438.5	G40.21	Galvanisé	219.447	438.894
p5003	2	PLT13x150x2438.5	2438.5	G40.21	Galvanisé	82.293	164.585
p5000	14	PLT13x137x150	150.0	G40.21	Galvanisé	4.331	60.631
	18					332.055	664.111
	18						664.111

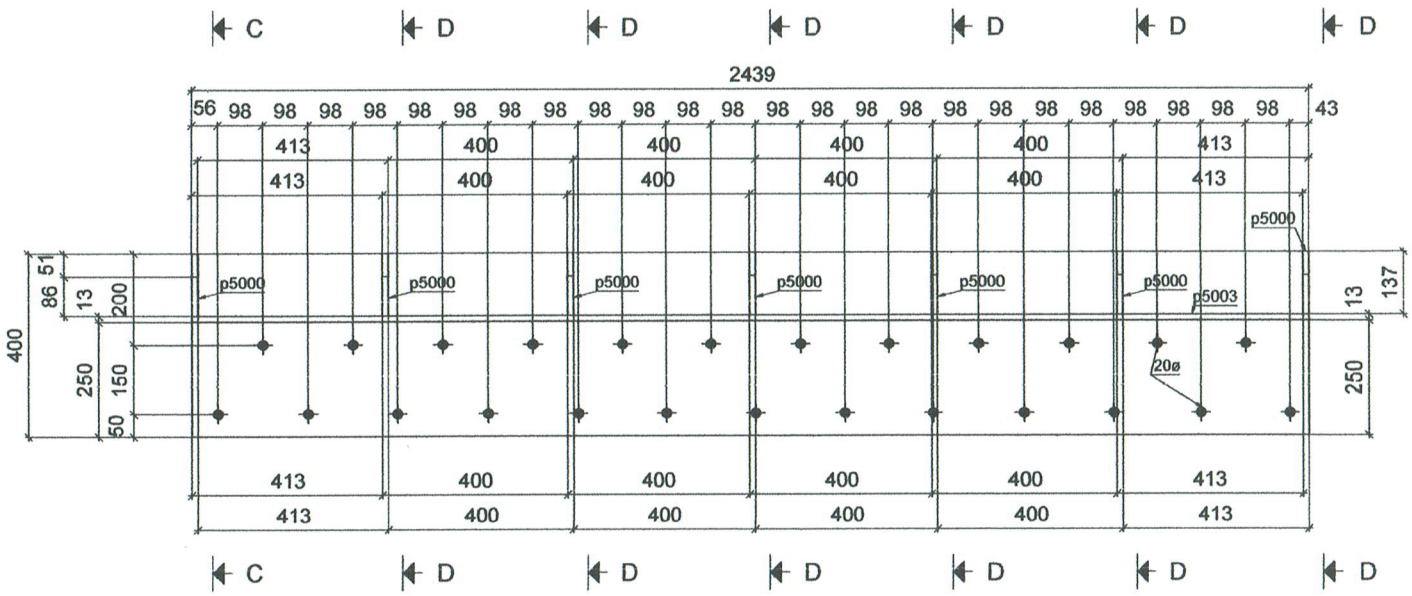

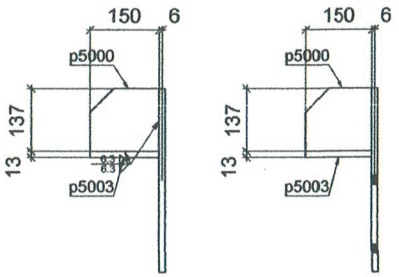

Section C - C

Section D - D

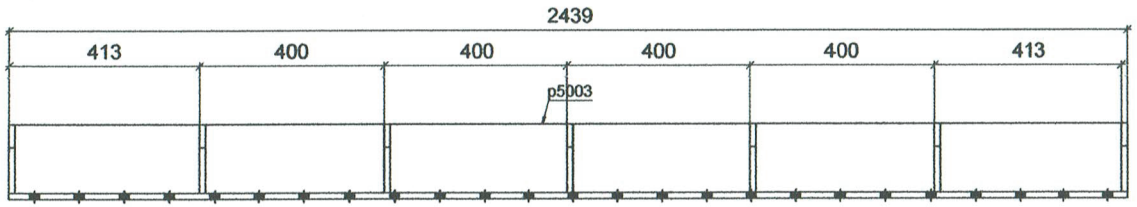

2 - P505 PLT13x400x2438.5



Rev.	Date	Par	Description
TQC	2018-10-01	Julie Lajoie	Tel que Construit.

Projet : Wall/Wall Anchor Rod Layout 01

No. Projet : MH2018.0839_ST

Statut : Approuvé	Commentaire :	
Détaillé par : Julie Lajoie	Trou : 13/16"Ø u/n	Client :Const. Gely
Vérifié par: Const. Gely	Soudure : E70XXELECT	No. Dessin : P505
STRUCTURES M.H. inc. ENTREPRENEUR GÉNÉRAL	Acier : G40.21	
	Peinture: Galvanisé	Sequence : TQC
	Date : 2018-09-07	

Quantité | Description | Longueur | Finition

Marque	Quantité	Description	Longueur	Nuance	Finition	Poids	Poids total
P506	2	Plat de renforcement					
p5010	2	PLT13x400x2438.5	2438.5	G40.21	Galvanisé	219.447	438.894
p5003	2	PLT13x150x2438.5	2438.5	G40.21	Galvanisé	82.293	164.585
p5000	14	PLT13x137x150	150.0	G40.21	Galvanisé	4.331	60.631
	18					332.055	664.111
	18						664.111

D

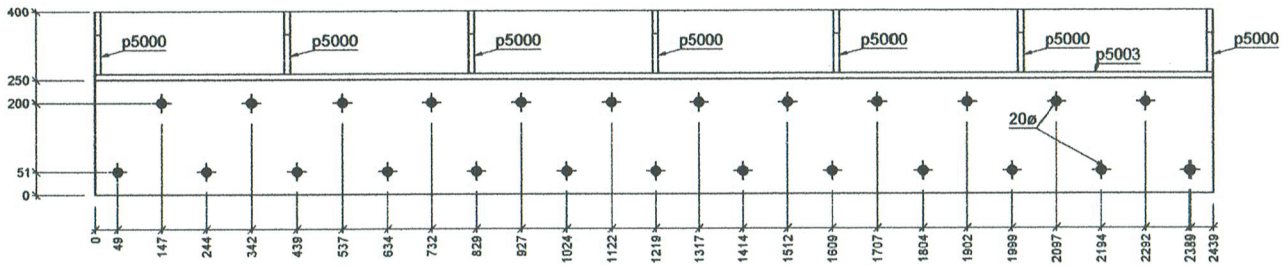

D

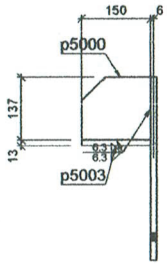

Section D - D

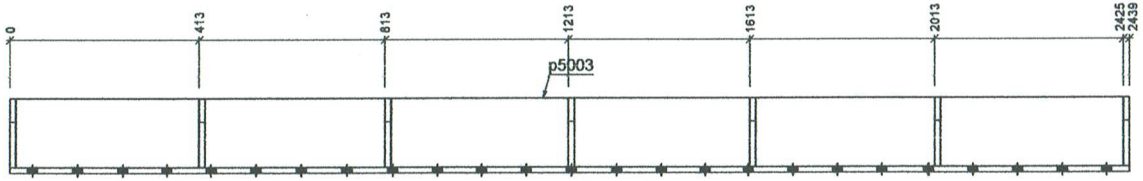

2 - P506 PLT13x400x2438.5

REGISTERED PROFESSIONAL ENGINEER
NT/NU

Rev.	Date	Par	Description
TQC	2018-10-01	Julie Lajoie	Tel que Construit.

Projet : Wall/Wall Anchor Rod Layout 01

No. Projet : MH2018.0839_ST

Statut : Approuvé	Commentaire :	
Détaillé par : Julie Lajoie	Trou : 13/16"Ø u/n	Client : Const. Gely
Vérifié par: Const. Gely	Soudure : E70XXELECT	No. Dessin : P506
STRUCTURES M.H. inc. ENTREPRENEUR GÉNÉRAL	Acier : G40.21	
	Peinture: Galvanisé	Sequence : TQC
	Date : 2018-09-07	

Marque	Quantité	Description	Longueur	Nuance	Finition	Poids	Poids total
P507	2	Plat de renforcement					
p5009	2	PLT13x400x2438.5	2438.5	G40.21	Galvanisé	219.447	438.894
p5002	2	PLT13x150x2275.5	2275.5	G40.21	Galvanisé	76.792	153.584
p5000	12	PLT13x137x150	150.0	G40.21	Galvanisé	4.331	51.969
	16					322.224	644.448
	16						644.448

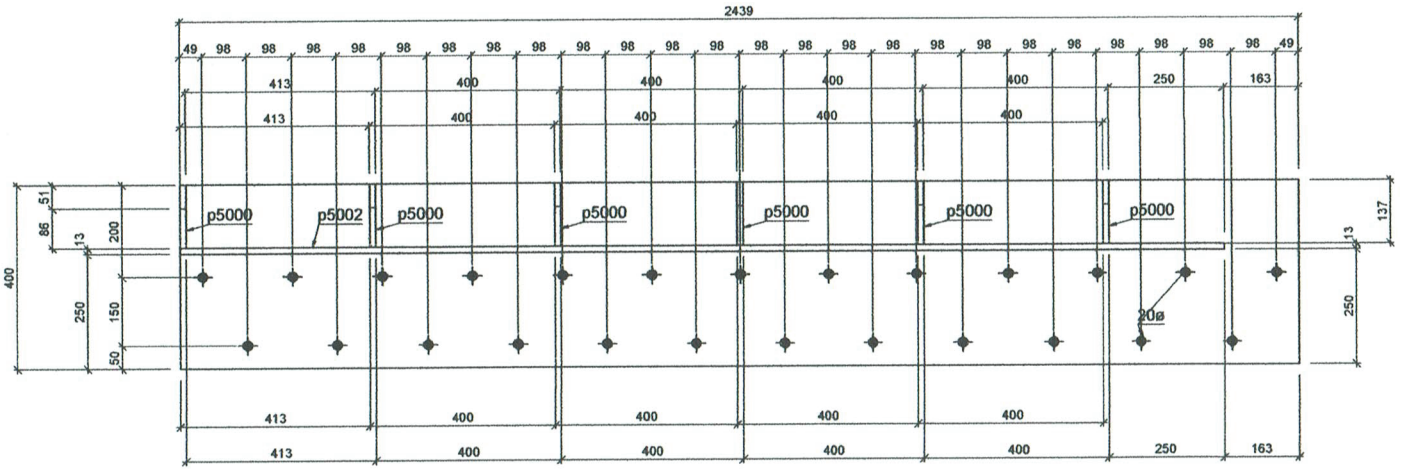

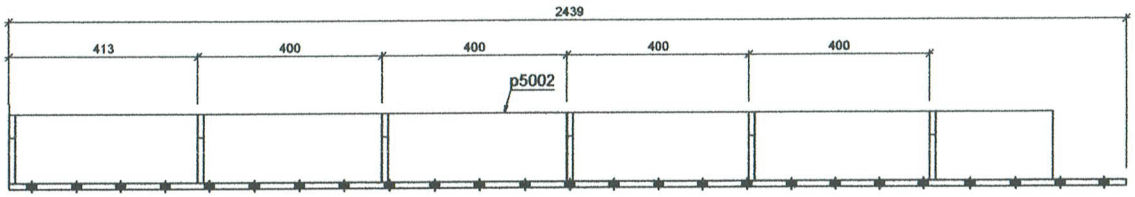

2 - P507 PLT13x400x2438.5

REGISTERED PROFESSIONAL ENGINEER
NT/NU

Rev.	Date	Par	Description
TQC	2018-10-01	Julie Lajoie	Tel que Construit.

Projet : Wall/Wall Anchor Rod Layout 01
No. Projet : MH2018.0839_ST

Statut : Approuvé	Commentaire :	
Détaillé par : Julie Lajoie	Trou : 13/16"Ø u/n	Client :Const. Gely
Vérifié par: Const. Gely	Soudure : E70XXELECT	No. Dessin : P507
STRUCTURES M.H. inc. ENTREPRENEUR GÉNÉRAL	Acier : G40.21	
	Peinture: Galvanisé	Sequence : TQC
	Date : 2018-09-07	

Marque	Quantité	Description	Longueur	Nuance	Finition	Poids	Poids total
P512	4	Plat de renforcement					
p0000	4	PLT13x137x150	150.01	G40.21	Galvanisé	4.331	17.323
	4					4.331	17.323
	4						17.323

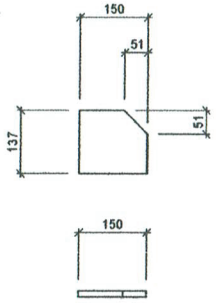

4 - P512 PLT13x137x150

REGISTERED PROFESSIONAL ENGINEER
NT/NU

Rev.	Date	Par	Description
TQC	2018-10-01	Julie Lajoie	Tel que Construit.

Projet : Wall/Wall Anchor Rod Layout 01

No. Projet : MH2018.0839_ST

Statut : Approuvé	Commentaire :	
Détaillé par : Julie Lajoie	Trou : 13/16"Ø u/n	Client :Const. Gely
Vérifié par: Const. Gely	Soudure : E70XXELECT	No. Dessin : P512
STRUCTURES M.H. inc. ENTREPRENEUR GÉNÉRAL	Acier : G40.21	
	Peinture: Galvanisé	Sequence : TQC
	Date : 2018-09-08	

Quantité	Description	Longueur	Finition

Marque	Quantité	Description	Longueur	Nuance	Finition	Poids	Poids total
P511	2	Plat de renforcement					
p5006	2	PLT13x550x2442	2442.0	G40.21	Galvanisé	302.173	604.346
p5001	2	PLT13x150x2442	2442.0	G40.21	Galvanisé	82.411	164.822
p5000	14	PLT13x137x150	150.0	G40.21	Galvanisé	4.331	60.631
	18					414.899	829.799
	18						829.799

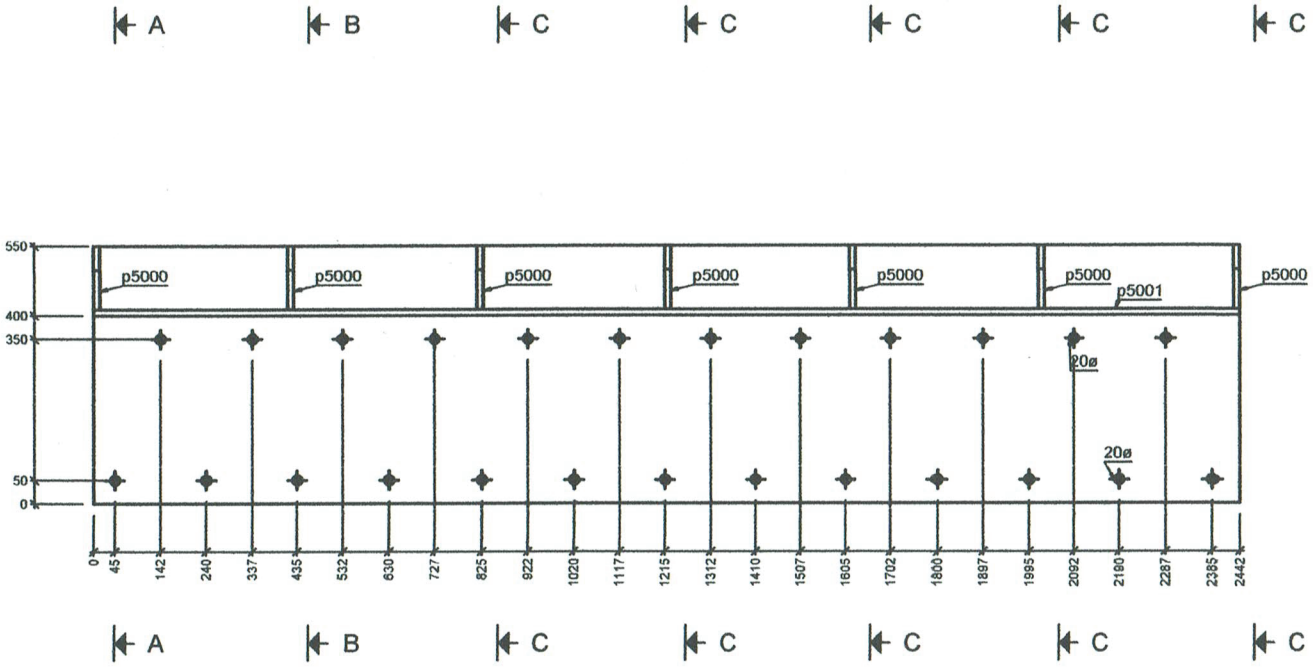

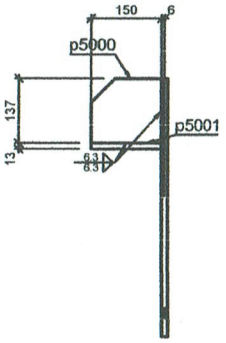

Section A - A

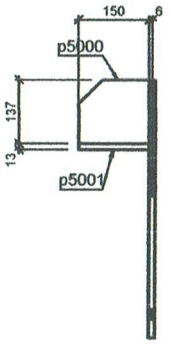

Section B - B

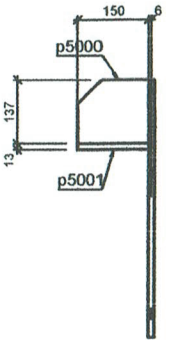

Section C - C



2 - P511 PLT13x550x2442

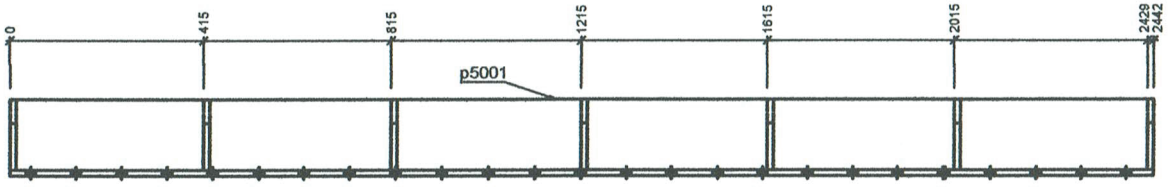

Rev.	Date	Par	Description
TQC	2018-10-01	Julie Lajoie	Tel que Construit.

Projet : Wall/Wall Anchor Rod Layout 01

No. Projet : MH2018.0839_ST

Statut : Approuvé	Commentaire :	
Détaillé par : Julie Lajoie	Trou : 13/16"Ø u/n	Client : Const. Gely
Vérifié par: Const. Gely	Soudure : E70XXELECT	No. Dessin : P511
	Acier : G40.21	
	Peinture: Galvanisé	Sequence :
	Date : 2018-09-08	

STRUCTURES M.H. inc. ENTREPRENEUR GÉNÉRAL

TQC

Marque	Quantité	Description	Longueur	Nuance	Finition	Poids	Poids total
P508	2	Plat de renforcement					
p5013	2	PLT13x400x2438.5	2438.5	G40.21	Galvanisé	219.447	438.894
p5002	2	PLT13x150x2275.5	2275.5	G40.21	Galvanisé	76.792	153.584
p5000	12	PLT13x137x150	150.0	G40.21	Galvanisé	4.331	51.969
	16					322.224	644.448
	16						644.448

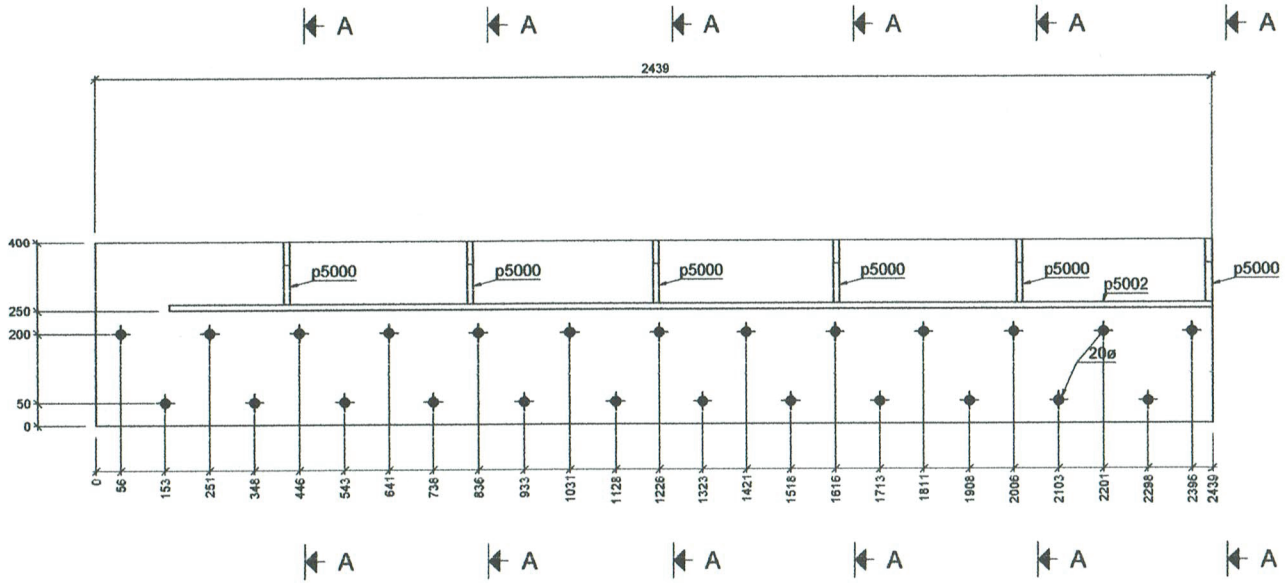

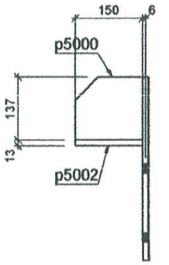

Section A - A

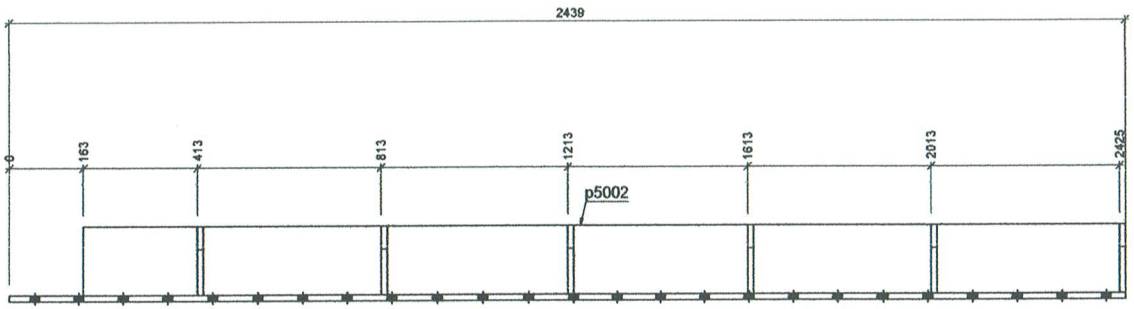

2 - P508 PLT13x400x2438.5

REGISTERED PROFESSIONAL ENGINEER
NT/NU

Rev.	Date	Par	Description
TQC	2018-10-01	Julie Lajoie	Tel que Construit.

Projet : Wall/Wall Anchor Rod Layout 01
No. Projet : MH2018.0839_ST

Statut : Approuvé	Commentaire :	
Détaillé par : Julie Lajoie	Trou : 13/16"Ø u/n	Client : Const. Gely
Vérifié par: Const. Gely	Soudure : E70XXELECT	No. Dessin : P508
STRUCTURES M.H. inc ENTREPRENEUR GÉNÉRAL	Acier : G40.21	
	Peinture: Galvanisé	Sequence : TQC
	Date : 2018-09-07	

Quantité	Description	Longueur	Finition

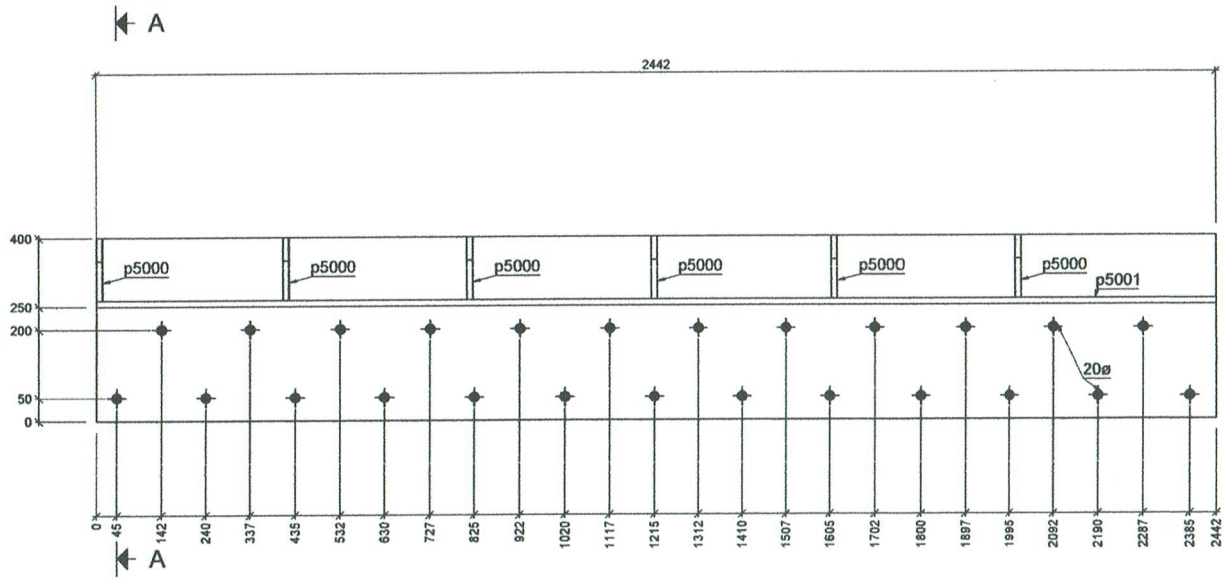

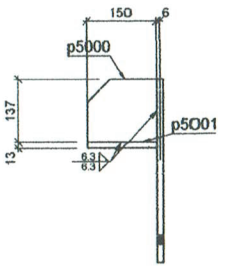

Section A - A

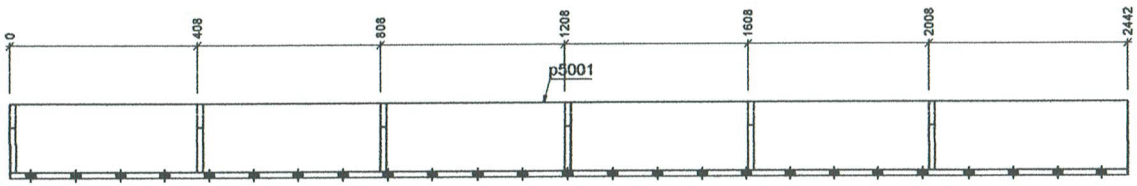

1- P513 PLT13x400x2442

Quantité	Description	Longueur	Finition

REGISTERED PROFESSIONAL ENGINEER
NT/NU

Rev.	Date	Par	Description
TQC	2018-10-01	Julie Lajoie	Tel que Construit.

Projet : Wall/Wall Anchor Rod Layout 01
No. Projet : MH2018.0839_ST

Statut : Approuvé	Commentaire :	
Détaillé par : Julie Lajoie	Trou : 13/16"Ø u/h	Client : Const. Gely
Vérifié par: Const. Gely	Soudure : E70XXELECT	No. Dessin : P513
STRUCTURES M.H. inc. ENTREPRENEUR GÉNÉRAL	Acier : G40.21	
	Peinture: Galvanisé	Sequence : TQC
	Date : 2018-09-08	

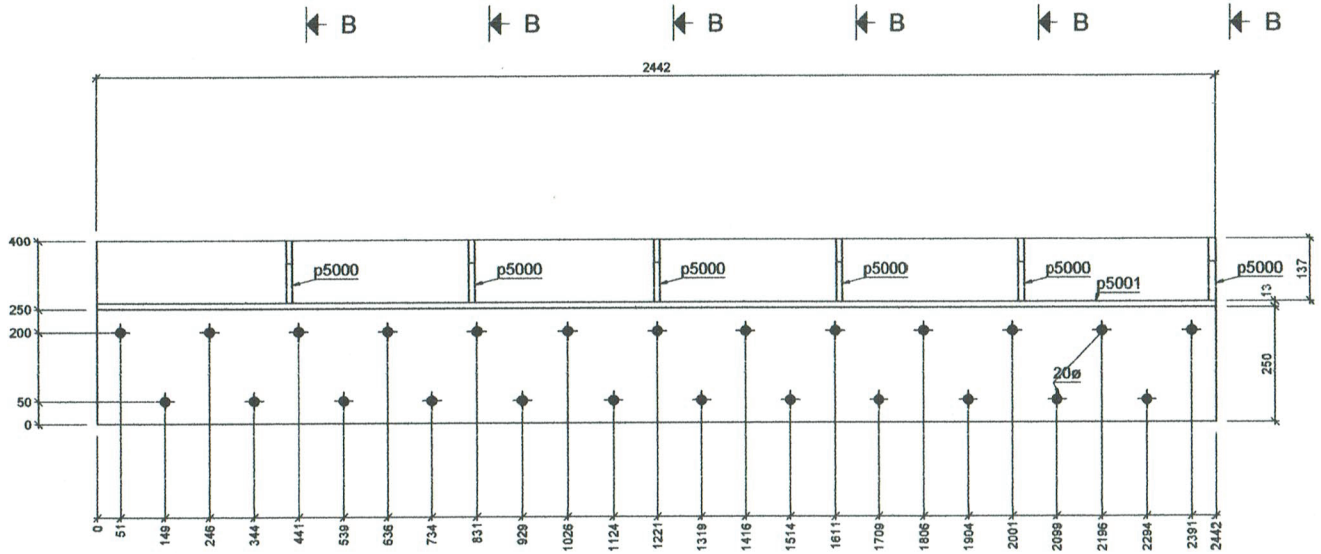

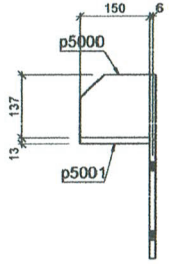

Section B - B

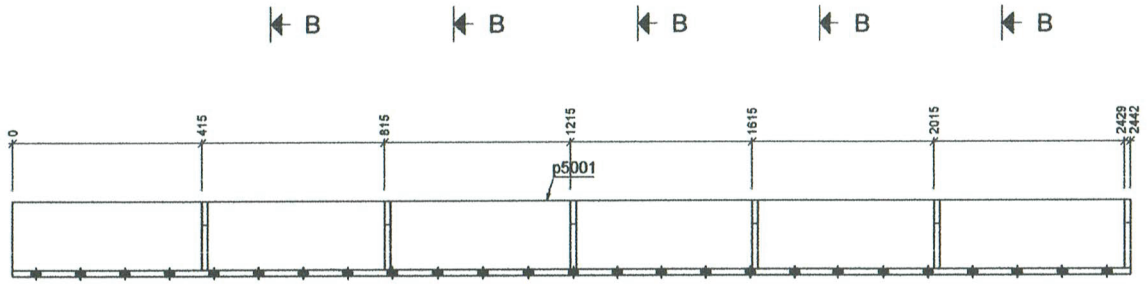

1 - P514 PLT13x400x2442

REGISTERED PROFESSIONAL ENGINEER
NT/NU

Rev.	Date	Par	Description
TQC	2018-10-01	Julie Lajoie	Tel que Construit.

Projet : Wall/Wall Anchor Rod Layout 01
No. Projet : MH2018.0839_ST

Statut : Approuvé	Commentaire :	
Détaillé par : Julie Lajoie	Trou : 13/16"Ø u/n	Client :Const. Gely
Vérifié par: Const. Gely	Soudure : E70XXELECT	No. Dessin : P514
STRUCTURES M.H. inc. ENTREPRENEUR GÉNÉRAL	Acier : G40.21	
	Peinture: Galvanisé	Sequence : TQC
	Date : 2018-09-07	

SUBMITTALS IDENTIFICATION SHEET

PROJECT: Wastewater Treatment Plant Upgrade
Iqaluit, Nunavut

NUNAMI
STANTEC LIMITED

1088C Noble House
Iqaluit NU
www.stantec.com

CONTRACTOR: Kudlik Construction Ltd, Project 2018-062

Telephone: 867-979-1166

E-mail: srousseau@kudlik.biz

SUBCONTRACTOR:

Person responsible:

Telephone: (418)487-8772 E-mail:

PRODUCT SUBMITTED:

☑ As Specified

☐ Alternate

SUPPLIER or MANUFACTURER: BASF – Ciment Quebec

Person responsible:

Telephone: E-mail:

DESCRIPTION OF SUBMITTAL:

# of pages:

Reference to drawings: S-001 – s-002

Reference to specs:

Division: 03 Section: 03 30 00

REMARKS:

REVIEW AND COMMENTS (for use by Consultants):

STANTEC PROJECT #: 110126045 SUBMITTAL # STC-007

This review by Stantec is for general conformance with the design concept of Stantec's design of the:

☐ Architectural ☐ Electrical
☑ Structural ☐ Other
☐ Mechanical

component(s) only and does not mean that Stantec has verified or approves the shop drawing(s). The Contractor remains solely responsible for the shop drawing(s) and this review by Stantec does not relieve the Contractor of the Contractor's responsibility for errors or omissions in the shop drawing(s) or for meeting all requirements of the contract documents. This review does not mean that Stantec approves the detailed design inherent in the shop drawing, responsibility for which shall remain with the Contractor submitting same, nor does this review mean that Stantec accepts any deviation of the shop drawing(s) from the contract documents. The Contractor is responsible for confirming all dimensions and correlating them at the job site, for all construction means, methods and techniques, and for coordination of construction work of all trades, including coordination of all shop drawings.

Stantec

☑ REVIEWED

☐ REVIEWED, AS NOTED

☐ REVISE AND RESUBMIT

☐ NOT REVIEWED

DATE 2018-07-13

BY pclyne

Review of this submission is for compliance with general intent of the contract. This review does not relieve the Sub-Contractor, Supplier or Manufacturer of responsibility for error or omissions in the submission or the responsibility of meeting all requirements of the contract documents. Any deviation from the contract documents initiated by the Sub-Contractor, Supplier or Manufacturer shall be at their sole risk. QUANTITIES AND DETAIL DIMENSIONS ARE THE SUB-CONTRACTORS OR SUPPLIERS RESPONSIBILITY. VERIFY DATA WITH FIELD DIMENSIONS.

SUBMITTAL TRACKING No.: **STC-007**

2018-07-10

Kudlik Construction Ltd.

CONCRETE MIX DESIGN

Client: City of Iqaluit	**Mixing:** Kudlik Construction
Project: Waste Water Treatment Plant	**Placing:** Kudlik Construction
Project #: 2018-062	

SPECIFICATIONS

Formula name:	IQ2018-HE-30MPA-F-1	**Class of Exposure**	New MBBR Wall, Curb, Drain Trench
		Slump:	80 ±25mm
Strength:	30 MPa	**Slump with superplasticiser:**	< 150 mm
Max aggregate size	20 mm	**W/C Ratio :**	0,39
Air:	5-8%	**Intended use:**	Grade beam, Oil Tank slab

f-1

MATERIALS

	Density	Weight (SSD)	Volume
Aggregate			
Screened sand, Iqaluit	2,694	900 kg	0,334 m^3
Crushed stone 5-20mm, Iqaluit	2,757	963 kg	0,349 m^3
Cement			
Type 30 - HE	3,150	360 kg	0,114 m^3
Cement additives			
Water			
Water, city of Iqaluit	1,000	142 L	0,142 m^3
Additives			
Air entraining agent - Masterair AE-200 (BASF)	1,010	98 ml	0,000 m^3
Water reducer - Masterset R-100 (BASF)	1,270	500 ml	0,000 m^3
Superplasticizer - Conchem SPN (BASF)	1,116	0 ml	0,000 m^3
Entrained air			
Air 5-8%	0	6,00%	0,060 m^3
Specific gravity of fresh concrete : *2365 kg/m^3*	*Total:*	*2366 kg*	*1,000 m^3*

Remarks:
- if required, superplasticizer can be added on site at a rate of +- 1 liter per cubic meter

Prepared by: René Déziel, P. Eng	Approved by: Rene Deziel, P. Eng
Date: July 10, 2018	Date: July 10, 2018

REGISTERED PROFESSIONAL ENGINEER
R. DEZIEL
LICENSEE
NT/NU

N (note class A-1 have air content)

Kudlik Construction Ltd.

CONCRETE MIX DESIGN

Client: Kudlik Construction Ltd	**Mixing:** Kudlik Construction
Project: Waste Water traitement plant	**Placing:** Kudlik Construction
Project #: 2018-062	

SPECIFICATIONS

Formula name:	IQ-2018-HE-35MPA-N	**Class of exposure**	N
		Slump:	75 ±25mm
Strength:	35 MPa	**Slump with superplasticiser:**	< 150 mm
Max aggregate size	20 mm	**W/C Ratio :**	0,40
Air:	0%	**Intended use:**	Interior Walls, Slabs, housekeeping

MATERIALS

	Density	Weight (SSD)	Volume
Aggregate			
Screened sand, Iqaluit	2,694	916 kg	0,340 m^3
Crushed stone 5-20mm, Iqaluit	2,757	1000 kg	0,363 m^3
Cement			
Type 30 - HE (Ciment Quebec)	3,150	380 kg	0,121 m^3
Cement additives			
Water			
Water, city of Iqaluit	1,000	151 L	0,151 m^3
Additives			
Air entraining agent - Micro Air I (BASF)	1,010	0 ml	0,000 m^3
Water reducer - Masterset R-100 (BASF)	1,270	500 ml	0,000 m^3
Superplasticizer - Conchem SPN (BASF)	1,116	0 ml	0,000 m^3
Entrained air			
Air 2,5%	---	---	0,025 m^3
Specific gravity of fresh concrete : *2448 kg/m^3*	*Total:*	*2448 kg*	*1,000 m^3*

Remarks:
- if required, superplasticizer can be added on site as required.

REGISTERED PROFESSIONAL ENGINEER R. DEZIEL LICENSEE NT/NU

Prepared by: René Déziel, P. Eng	Approved by: Rene Deziel, P. Eng
Date: June 24, 2018	Date: June 24, 2018

N (note class A-3 have air content)

Kudlik Construction Ltd.

CONCRETE MIX DESIGN

Client: City of Iqaluit	**Mixing:** Kudlik Construction
Project: Waste Water Treatment Plant	**Placing:** Kudlik Construction
Project #: 2018-062	

SPECIFICATIONS

Formula name:	IQ2018-RFD-30MPA-XYPEX-N	**Class of Exposure**	New MBBR Wall, Curb, Drain Trench
		Slump:	80 ±25mm
Strength:	30 MPa	**Slump with superplasticiser:**	< 150 mm
Max aggregate size	20 mm	**W/C Ratio :**	0,39
Air:	0%	**Intended use:**	New MBBR Wall, Curb, Drain Trench

MATERIALS

	Density	Weight (SSD)	Volume
Aggregate			
Screened sand, Iqaluit	2,694	932 kg	0,346 m^3
Crushed stone 5-20mm, Iqaluit	2,757	1035 kg	0,375 m^3
Cement			
Type 30 - HE	3,150	360 kg	0,114 m^3
Cement additives			
Water			
Water, city of Iqaluit	1,000	140 L	0,140 m^3
Additives			
Air entraining agent - Masterair AE-200 (BASF)	1,010	0 ml	0,000 m^3
Water reducer - Masterset R-100 (BASF)	1,270	780 ml	0,001 m^3
Superplasticizer - Conchem SPN (BASF)	1,116	0 ml	0,000 m^3
Xypex C-500	2,750	10 kg	0,004 m3
Entrained air			
Air 2%	0	2,00%	0,020 m^3
Specific gravity of fresh concrete : *2468 kg/m^3*	*Total:*	*2468 kg*	*1,000 m^3*

Remarks:

- if required, superplasticizer can be added on site at a rate of +- 1 liter per cubic meter

Prepared by: René Déziel, P. Eng	Approved by: Rene Deziel, P. Eng
Date: July 10, 2018	Date: July 10, 2018

REGISTERED PROFESSIONAL R. DEZIEL LICENSEE NT/NU

Ciment Québec

03 30 00 item 2.1

TYPICAL ANALYSIS CERTIFICATE

High Early-strength cement type **HE**

Physical tests

Time of Set Vicat (minutes)
Initial 90
Final 220

Fineness
Specific surface
(Blaine) (m^2/kg) 550
Retained on 45 µm
sieve (%)..... 1

False set (%) 100
Autoclave
expansion (%) 0.05
Air content (%)..... 8

Compressive strength (MPa)
1 day..... 24.0
3 days..... 33.0
7 days..... 37.0
28 days (Aug-12)..... 44.0

Expansion of mortar bars
at 14 days (%) 0.015

Chemical analysis (%)

SiO_2..... 19.0
Al_2O_3 ..... 4.9
Fe_2O_3..... 3.5
CaO 60.5
Free Lime..... 1.5
MgO..... .2.5
SO_3..... 4.5
Loss on ignition.....2.0
Insoluble residue 0.5
Total alkali
(Na_2O equivalent) 0.94

Composition Minéralogique
C_3S 51.0
C_2S.....16.0
C_3A 7.0
C_4AF 10.5

We hereby certify that the cement delivered complies with the CSA Standard A3000-08 requirements section A3001-08, Type HE.

For any information regarding this certificate, please contact our technical service at 418 329-2100, ext. 3231.

Michel Chabot, Eng.
Chief Chemist

Description

Conchem SPN high-range water-reducing admixture, is designed to produce concrete with the workability needed to facilitate placement. Flowable concrete with high-early strength gain is readily attainable through the use of this admixture. Conchem SPN admixture meets ASTM C 494/C 494M requirements for Type A, water-reducing, and Type F, high-range water-reducing, admixtures.

Applications

Recommended for use in:

- Concrete where normal setting characteristics are desired
- Prestressed, precast and flowing concrete applications
- High slump, flowing concrete

CONCHEM® SPN

Admixture for the Production of Flowing Concrete

Features

- Reduced water content for a given level of workability
- Workability improved at equal water content when compared to a non-treated, reference concrete
- Normal setting characteristics
- High-early strength

Benefits

- Faster concrete placement
- Superplasticizing effect for high-slump applications
- Rapid strength gain for energy savings and earlier stripping (for precast/prestressed concrete applications)
- Earlier structural use of concrete

Performance Characteristics

Rate of Hardening: Setting time of concrete is influenced by the chemical and physical composition of the basic ingredients of the concrete, temperature of the concrete and climatic conditions. Trial mixes should be made with job materials to determine the dosage required for a specified setting time and a given strength requirement.

Strength: Concrete mixtures containing Conchem SPN admixture develop strength more rapidly than plain concrete mixtures of equal consistency.

Guidelines for Use

Dosage: Conchem SPN admixture has a recommended dosage range of 10-20 fl oz/cwt (650-1300 mL/100 kg) of cementitious material, depending upon the application, the required strength, or the desired slump. At cooler temperatures, the dosage may have to be increased by 15-25%.

The above dosage applies for most concrete mixtures using typical concrete ingredients. Because of variations in job condition and concrete materials, dosages other than the recommended amounts may be required. In such cases, contact your local BASF Admixtures, Inc. representative.

Product Notes

Corrosivity – Non-Chloride, Non-Corrosive: Conchem SPN admixture will neither initiate nor promote corrosion of reinforcing steel embedded in concrete, prestressing steel or of galvanized steel floor and roof systems. Neither calcium chloride nor other chloride-based ingredients are used in the manufacture of Conchem SPN admixture.

Master Builders

Compatibility: Conchem SPN admixture should not be used with Rheomac UW 450, Rheomac VMA 358, Rheomac VMA 450, PolyHeed FC 100, PolyHeed 1020, PolyHeed 1025 and Glenium-based high-range water-reducing admixtures as erratic behaviors in slump, slump flow or pumpability may be experienced. When used in conjunction with other admixtures, each admixture must be dispensed separately into the mix.

Storage and Handling

Storage Temperature: If Conchem SPN admixture freezes, thaw at 40 °F (4 °C) or above and completely reconstitute by mild mechanical agitation. ***Do not use pressurized air for agitation.***

Shelf Life: Conchem SPN admixture has a minimum shelf life of 18 months. Depending on storage conditions, the shelf life may be greater than stated. Please contact your BASF Admixtures, Inc. representative regarding suitability for use and dosage recommendations if the shelf life of Conchem SPN admixture has been exceeded.

Packaging

Conchem SPN admixture is supplied in 55 gal (208 L) drums, 275 gal (1040 L) totes and by bulk delivery.

Related Documents

Material Safety Data Sheets: Conchem SPN admixture.

Additional Information

For suggested specification information on Conchem SPN admixture or its use in developing concrete mixtures with special performance characteristics, contact your BASF Admixtures, Inc. representative.

BASF Admixtures, Inc. is a leading provider of innovative chemical admixtures and silica fume for specialty concrete used in the ready mix, precast, manufactured concrete products, underground construction and paving markets in the United States and Canada. The Company's respected Master Builders brand products are used to improve the placing, pumping, finishing, appearance and performance characteristics of concrete.

www.basf-admixtures.com
United States 23700 Chagrin Boulevard, Cleveland, Ohio 44122-5544 ■ Tel: 800 628-9990 ■ Fax: 216 839-8821
Canada 1800 Clark Boulevard, Brampton, Ontario L6T 4M7 ■ Tel: 800 387-5862 ■ Fax: 905 792-0651

® Construction Research & Technology GMBH

© BASF Admixtures, Inc. 2006 ■ Printed in USA ■ 07/06 ■ LIT # 1023960

Master Builders

BASF
We create chemistry

3	03 30 00	Cast-in-Place Concrete
	03 40 00	Precast Concrete
	03 70 00	Mass Concrete

MasterSet® R 100

03 30 00 item 2.2.2

Set Retarding Admixture

Formerly Pozzolith 100 XR*

Description

MasterSet R 100 ready-to-use liquid admixture is used for producing more uniform and predictable quality concrete. Placing and finishing requirements are facilitated because this admixture retards setting time. MasterSet R 100 admixture meets ASTM C 494/C 494M requirements for Type B, retarding, and Type D, water-reducing and retarding, admixtures.

Applications

Recommended for use in:

- Prestressed concrete
- Precast concrete
- Reinforced concrete
- Shotcrete
- Lightweight concrete
- Pumped concrete
- 4x4™ Concrete
- Pervious concrete
- Self-consolidating concrete

Features

- Reduced water content required for a given workability
- Retarded setting characteristics
- Controlled retardation – depending on the addition rate
- Full-form deflection can take place (before concrete sets) in extended pours for bridge decks, cantilevers, nonshored structural elements, etc.

Benefits

- Improved workability
- Reduced segregation
- Superior finishing characteristics for flatwork and cast surfaces
- Flexibility in scheduling of placing and finishing operations
- Offsets effects of early stiffening during extended delays between mixing and placing
- Helps eliminate cold joints
- Peak temperature and/or rate of temperature rise in mass concrete lowered thereby reducing thermal cracking
- Increased compressive and flexural strengths

MASTER® BUILDERS SOLUTIONS

Performance Characteristics

Rate of Hardening: The temperature of the concrete mixture and the ambient temperature (forms, earth, reinforcement, air, etc.) affect the hardening rate of concrete. At higher temperatures, concrete stiffens more rapidly, which may cause problems with placing and finishing. MasterSet R 100 admixture retards the set of concrete. Within the normal dosage range, it will generally extend the setting time of concrete containing normal portland cement approximately 1.5 to 8 hours compared to that of a plain concrete mixture, depending on job materials and temperatures. Trial mixtures should be made with materials approximating job conditions to determine the dosage required.

Compressive Strength: Concrete produced with MasterSet R 100 admixture will have rapid strength development after initial set occurs. If retardation is within the normal ASTM C 494/C 494M Types B and D specifications, MasterSet R 100 admixture will develop higher early (24-hour) and ultimate strengths than plain concrete when used within the recommended dosage range and under normal, comparable curing conditions.

When MasterSet R 100 admixture is used in heat-cured concrete, the length of the preheating period should be increased until initial set of the concrete is achieved. The actual heat-curing period is then reduced accordingly to maintain existing production cycles without sacrificing early or ultimate strengths.

Guidelines for Use

Dosage: MasterSet R 100 admixture is recommended for use at a dosage of 3 ± 1 fl oz/cwt (195 ± 65 mL/100 kg) of cementitious materials for most concrete mixtures using typical concrete ingredients. Because of variations in job conditions and concrete materials, dosage rates other than the recommended amounts may be required. In such cases, contact your local sales representative.

MasterSet R 100 admixture may be used at less than the recommended dosage for the purpose of retardation only.

Product Notes

Corrosivity – Non-Chloride, Non-Corrosive: MasterSet R 100 admixture will neither initiate nor promote corrosion of reinforcing steel in concrete. This admixture does not contain intentionally-added calcium chloride or other chloride-based ingredients.

Compatibility: MasterSet R 100 admixture may be used in combination with any BASF admixtures. When used in conjunction with other admixtures, each admixture must be dispensed separately into the mixture.

Storage and Handling

Storage Temperature: MasterSet R 100 admixture should be stored above freezing temperatures. If this product freezes, thaw at 35 °F (2 °C) or above and completely reconstitute by mild mechanical agitation. **Do not use pressurized air for agitation.**

Shelf Life: MasterSet R 100 admixture has a minimum shelf life of 18 months. Depending on storage conditions, the shelf life may be greater than stated. Please contact your local sales representative regarding suitability for use and dosage recommendations if the shelf life of MasterSet R 100 admixture has been exceeded.

Packaging

MasterSet R 100 admixture is supplied in 55 gal (208 L) drums, 275 gal (1040 L) totes and by bulk delivery.

Related Documents

Safety Data Sheets: MasterSet R 100 admixture

Additional Information

For additional information on MasterSet R 100 admixture or its use in developing a concrete mixture with special performance characteristics, contact your local sales representative.

The Admixture Systems business of BASF's Construction Chemicals division is the leading provider of solutions that improve placement, pumping, finishing, appearance and performance characteristics of specialty concrete used in the ready-mixed, precast, manufactured concrete products, underground construction and paving markets. For over 100 years we have offered reliable products and innovative technologies, and through the Master Builders Solutions brand, we are connected globally with experts from many fields to provide sustainable solutions for the construction industry.

Limited Warranty Notice

BASF warrants this product to be free from manufacturing defects and to meet the technical properties on the current Technical Data Guide, if used as directed within shelf life. Satisfactory results depend not only on quality products but also upon many factors beyond our control. BASF MAKES NO OTHER WARRANTY OR GUARANTEE, EXPRESS OR IMPLIED, INCLUDING WARRANTIES OF MERCHANTABILITY OR FITNESS FOR A PARTICULAR PURPOSE WITH RESPECT TO ITS PRODUCTS. The sole and exclusive remedy of Purchaser for any claim concerning this product, including but not limited to, claims alleging breach of warranty, negligence, strict liability or otherwise, is shipment to purchaser of product equal to the amount of product that fails to meet this warranty or refund of the original purchase price of product that fails to meet this warranty, at the sole option of BASF. Any claims concerning this product must be received in writing within one (1) year from the date of shipment and any claims not presented within that period are waived by Purchaser. BASF WILL NOT BE RESPONSIBLE FOR ANY SPECIAL, INCIDENTAL, CONSEQUENTIAL (INCLUDING LOST PROFITS) OR PUNITIVE DAMAGES OF ANY KIND.

Purchaser must determine the suitability of the products for the intended use and assumes all risks and liabilities in connection therewith. This information and all further technical advice are based on BASF's present knowledge and experience. However, BASF assumes no liability for providing such information and advice including the extent to which such information and advice may relate to existing third party intellectual property rights, especially patent rights, nor shall any legal relationship be created by or arise from the provision of such information and advice. BASF reserves the right to make any changes according to technological progress or further developments. The Purchaser of the Product(s) must test the product(s) for suitability for the intended application and purpose before proceeding with a full application of the product(s). Performance of the product described herein should be verified by testing and carried out by qualified experts.

* Pozzolith 100 XR became MasterSet R 100 under the Master Builders Solutions brand, effective January 1, 2014.

© BASF Corporation 2015 ■ 01/15 ■ PRE-DAT-0082

BASF Corporation
Admixture Systems
www.master-builders-solutions.basf.us

United States
23700 Chagrin Boulevard
Cleveland, Ohio 44122-5544
Tel: 800 628-9990 ■ Fax: 216 839-8821

Canada
1800 Clark Boulevard
Brampton, Ontario L6T 4M7
Tel: 800 387-5862 ■ Fax: 905 792-0651

BASF
The Chemical Company

3

03 30 00	Cast-In-Place Concrete
03 40 00	Precast Concrete
03 70 00	Mass Concrete

MasterAir® AE 200

03 30 00 item 2.2.1

Air-Entraining Admixture

Formerly Micro Air*

Description

MasterAir AE 200 air-entraining admixture provides concrete with extra protection by creating air bubbles that are ultrastable, small and closely spaced – a characteristic especially useful in the types of concrete known for their difficulty to entrain and maintain the air content desired.

Even when used at a lower dosage than standard air-entraining admixtures, MasterAir AE 200 admixture meets the requirements of ASTM C 260, AASHTO M 154, and CRD-C 13.

Applications

Recommended for use in:

- Concrete exposed to cyclic freezing and thawing
- Production of high-quality normal or lightweight concrete (heavyweight concrete normally does not contain entrained air)

Features

- Ready-to-use in the proper concentration for rapid, accurate dispensing
- Greatly improved stability of air-entrainment
- Ultra stable air bubbles

Benefits

- Increased resistance to damage from cyclic freezing and thawing
- Increased resistance to scaling from deicing salts
- Improved plasticity and workability
- Improved air-void system in hardened concrete
- Improved ability to entrain and retain air in low-slump concrete, concrete containing high-carbon content fly ash, concrete using large amounts of fine materials, concrete using high-alkali cements, high-temperature concrete, and concrete with extended mixing times
- Reduced permeability – increased watertightness
- Reduced segregation and bleeding

Performance Characteristics

Concrete durability research has established that the best protection for concrete from the adverse effects of freezing and thawing cycles and deicing salts results from: proper air content in the hardened concrete, a suitable air-void system in terms of bubble size and spacing and adequate concrete strength, assuming the use of sound aggregates and proper mixing, transporting, placing, consolidation, finishing and curing techniques. MasterAir AE 200 admixture can be used to obtain adequate freezing and thawing durability in a properly proportioned concrete mixture, if standard industry practices are followed.

MASTER® BUILDERS SOLUTIONS

Air Content Determination: The total air content of normal weight concrete should be measured in strict accordance with ASTM C 231, "Standard Test Method for Air Content of Freshly Mixed Concrete by the Pressure Method" or ASTM C 173/C 173M, "Standard Test Method for Air Content of Freshly Mixed Concrete by the Volumetric Method."

The air content of lightweight concrete should only be determined using the Volumetric Method. The air content should be verified by calculating the gravimetric air content in accordance with ASTM C 138/C 138M, "Standard Test Method for Density (Unit Weight), Yield, and Air Content (Gravimetric) of Concrete." If the total air content, as measured by the Pressure Method or Volumetric Method and as verified by the Gravimetric Method, deviates by more than 1.5%, the cause should be determined and corrected through equipment calibration or by whatever process is deemed necessary.

Guidelines for Use

Dosage: There is no standard dosage for MasterAir AE 200 admixture. The exact quantity of air-entraining admixture needed for a given air content of concrete varies because of differences in concrete making materials and ambient conditions. Typical factors that might influence the amount of air entrained include: temperature, cementitious materials, sand gradation, sand-aggregate ratio, mixture proportions, slump, means of conveying and placement, consolidation and finishing technique.

The amount of MasterAir AE 200 admixture used will depend upon the amount of entrained air required under actual job conditions. In a trial mixture, use 0.125 to 1.5 fl oz/cwt (8-98 mL/100 kg) of cement. In mixtures containing water-reducing or set-control admixtures, the amount of MasterAir AE 200 admixture needed is somewhat less than the amount required in plain concrete. Due to possible changes in the factors that can affect the dosage of MasterAir AE 200 admixture, frequent air content checks should be made during the course of the work. Adjustments to the dosage should be based on the amount of entrained air required in the mixture at the point of placement. If an unusually high or low dosage of MasterAir AE 200 admixture is required to obtain the desired air content, consult your Local sales representative. In such cases, it may be necessary to determine that, in addition to a proper air content in the fresh concrete, a suitable air-void system is achieved in the hardened concrete.

Dispensing and Mixing: Add MasterAir AE 200 admixture to the concrete mixture using a dispenser designed for air-entraining admixtures; or add manually using a suitable measuring device that ensures accuracy within plus or minus 3% of the required amount. For optimum, consistent performance, the air-entraining admixture should be dispensed on damp, fine aggregate or with the initial batch water. If the concrete mixture contains lightweight aggregate, field evaluations should be conducted to determine the best method to dispense the air-entraining admixture.

Precaution

In a 2005 publication from the Portland Cement Association (PCA R&D Serial No. 2789), it was reported that problematic air-void clustering that can potentially lead to above normal decreases in strength was found to coincide with late additions of water to air-entrained concretes. Late additions of water include the conventional practice of holding back water during batching for addition at the jobsite. Therefore, caution should be exercised with delayed additions to air-entrained concrete. Furthermore, an air content check should be performed after post-batching addition of any other materials to an air-entrained concrete mixture.

Product Notes

Corrosivity – Non-Chloride, Non-Corrosive: MasterAir AE 200 admixture will neither initiate nor promote corrosion of reinforcing and prestressing steel embedded in concrete, or of galvanized steel floor and roof systems. No calcium chloride or other chloride-based ingredients are used in the manufacture of this admixture.

Compatibility: MasterAir AE 200 admixture may be used in combination with any BASF admixture, unless stated otherwise on the data sheet for the other product. When used in conjunction with other admixtures, each admixture must be dispensed separately into the mixture.

Storage and Handling

Storage Temperature: MasterAir AE 200 admixture should be stored and dispensed at 35 °F (2 °C) or higher. Although freezing does not harm this product, precautions should be taken to protect it from freezing. If it freezes, thaw and reconstitute by mild mechanical agitation. Do not use pressurized air for agitation.

Shelf Life: MasterAir AE 200 admixture has a minimum shelf life of 18 months. Depending on storage conditions, the shelf life may be greater than stated. Please contact your Local sales representative regarding suitability for use and dosage recommendations if the shelf life of MasterAir AE 200 admixture has been exceeded.

Safety: MasterAir AE 200 admixture is a caustic solution. Chemical goggles and gloves are recommended when transferring or handling this material. (See SDS and/or product label for complete information.)

Packaging

MasterAir AE 200 admixture is supplied in 55 gal (208 L) drums, 275 gal (1040 L) totes and by bulk delivery.

Related Documents

Safety Data Sheets: MasterAir AE 200 admixture

Additional Information

For suggested specification information or for additional product data on MasterAir AE 200 admixture, contact your local sales representative.

The Admixture Systems business of BASF's Construction Chemicals division is the leading provider of solutions that improve placement, pumping, finishing, appearance and performance characteristics of specialty concrete used in the ready-mixed, precast, manufactured concrete products, underground construction and paving markets. For over 100 years we have offered reliable products and innovative technologies, and through the Master Builders Solutions brand, we are connected globally with experts from many fields to provide sustainable solutions for the construction industry.

Limited Warranty Notice

BASF warrants this product to be free from manufacturing defects and to meet the technical properties on the current Technical Data Guide, if used as directed within shelf life. Satisfactory results depend not only on quality products but also upon many factors beyond our control. BASF MAKES NO OTHER WARRANTY OR GUARANTEE, EXPRESS OR IMPLIED, INCLUDING WARRANTIES OF MERCHANTABILITY OR FITNESS FOR A PARTICULAR PURPOSE WITH RESPECT TO ITS PRODUCTS. The sole and exclusive remedy of Purchaser for any claim concerning this product, including but not limited to, claims alleging breach of warranty, negligence, strict liability or otherwise, is shipment to purchaser of product equal to the amount of product that fails to meet this warranty or refund of the original purchase price of product that fails to meet this warranty, at the sole option of BASF. Any claims concerning this product must be received in writing within one (1) year from the date of shipment and any claims not presented within that period are waived by Purchaser. BASF WILL NOT BE RESPONSIBLE FOR ANY SPECIAL, INCIDENTAL, CONSEQUENTIAL (INCLUDING LOST PROFITS) OR PUNITIVE DAMAGES OF ANY KIND.

Purchaser must determine the suitability of the products for the intended use and assumes all risks and liabilities in connection therewith. This information and all further technical advice are based on BASF's present knowledge and experience. However, BASF assumes no liability for providing such information and advice including the extent to which such information and advice may relate to existing third party intellectual property rights, especially patent rights, nor shall any legal relationship be created by or arise from the provision of such information and advice. BASF reserves the right to make any changes according to technological progress or further developments. The Purchaser of the Product(s) must test the product(s) for suitability for the intended application and purpose before proceeding with a full application of the product(s). Performance of the product described herein should be verified by testing and carried out by qualified experts.

* Micro Air became MasterAir AE 200 under the Master Builders Solutions brand, effective January 1, 2014.

© BASF Corporation 2014 ■ 01/14 ■ PRE-DAT-0009

BASF Corporation
Admixture Systems
www.master-builders-solutions.basf.us

United States
23700 Chagrin Boulevard
Cleveland, Ohio 44122-5544
Tel: 800 628-9990 ■ Fax: 216 839-8821

Canada
1800 Clark Boulevard
Brampton, Ontario L6T 4M7
Tel: 800 387-5862 ■ Fax: 905 792-0651

ADMIX C-500/C-500 NF

CEMENTITIOUS CRYSTALLINE

Concrete Waterproofing

Description

Xypex is a unique chemical treatment for the waterproofing, protection and improvement of concrete. XYPEX ADMIX C-500/C-500 NF is added to the concrete mix at the time of batching. Xypex Admix C-500/C-500 NF consists of Portland cement, silica sand (excluding the NF grade) and various active, proprietary chemicals. These active chemicals react with the moisture in fresh concrete and with the by products of cement hydration to cause a catalytic reaction. This reaction generates a non-soluble crystalline formation throughout the pores and capillary tracts of the concrete that permanently seals the concrete and prevents the penetration of water and other liquids from any direction.

Xypex Admix C-Series

All variations of the Admix C-Series contain the same amount of reactive chemicals at their prescribed dosage rates and provide the same waterproofing and durability performance characteristics. Xypex Admix C-Series is available in regular or no-fines grades (NF). **Xypex Admix C-500/C-500 NF** is formulated to have minimal or no effect on setting time. **Xypex Admix C-1000/C-1000 NF** is formulated for concrete mix designs where a normal or mildly delayed set is desired. **Xypex Admix C-2000/ C-2000 NF** is designed for warmer climates and projects where a slower hydration rate is typically required. See Setting Time and Strength for more details. Consult with a Xypex Technical Services Representative for the most appropriate Xypex Admix for your project.

Recommended for:

- Reservoirs
- Sewage and Water Treatment Plants
- Secondary Containment Structures
- Tunnels and Subway Systems
- Underground Vaults
- Foundations / Basements
- Parking Structures
- Swimming Pools
- Precast Components
- Bridge Structures

Advantages

- Resists extreme hydrostatic pressure
- Becomes an integral part of the substrate
- Highly resistant to aggressive and chemical environments
- Can seal static hairline cracks up to 0.4 mm
- Allows concrete to breathe
- Non-toxic
- No VOCs
- Less costly to install than most other methods
- Permanent
- Added to the concrete at time of batching and therefore is not subject to climatic restraints
- Increases flexibility in construction scheduling

Packaging

Xypex Admix C-500/C-500 NF is packaged in convenient sizes of various types of packaging, including paper bags and soluble bags. Contact your local Xypex Technical Services Representative or dealer for details and availability.

Storage

Xypex products must be stored dry at a minimum temperature of 45ºF (7ºC). Shelf life is one year when stored under proper conditions.

Dosage Rates

Xypex Admix C-500 (Regular Grade):
2 - 3% by weight of cement

Xypex Admix C-500 NF (No Fines Grade):
1 - 1.5% by weight of cement

NOTE:

1. For determining the appropriate dosage rate and for further information regarding concrete mixes containing fly ash / slag, enhanced chemical resistance, optimum concrete performance, or meeting the specific requirements and conditions of your project, consult with the local Xypex Technical Services Representative or Xypex's Technical Services Department.

2. The recommended minimum dosage rate for Admix C-500 (Regular Grade) is 10 lbs. per yd^3 (6 kg per m^3); the maximum dosage is 20 lbs. per yd^3 (12 kg per m^3). For Admix C-500 NF (No Fines Grade), the minimum dosage is 5 lbs. per yd^3 (3 kg per m^3); the maximum dosage is 10 lbs. per yd^3 (6 kg per m^3).

3. Under certain conditions the dosage rate for the Admix NF (No Fines Grade) may be as low as 0.8% depending on the quantity and type of total cementitious materials.

Material Properties

Visual Appearance	Light grey powder
pH	12.0 - 12.4
Chloride Content	<0.1%
VOC	none

Test Data

PERMEABILITY

U.S. Army Corps of Engineers CRD C48, "Permeability of Concrete", Aviles Engineering Corp., Houston, USA

Two concrete samples containing Xypex Admix and an untreated control sample were tested for water permeability. Both the treated and untreated samples were subjected to a pressure of 150 psi / 1.04 MPa (350 ft. / 106.7 m water head). Results showed moisture and permeated water throughout the untreated sample after 24 hours. However, the Xypex Admix samples showed no leakage, and water penetration of only 1.5 mm / 0.06 inches after 120 hours (5 days).

U.S. Army Corps of Engineers CRD C48, "Permeability of Concrete", Setsco Services, Pte Ltd., Singapore

Six Xypex Admix-treated and six untreated concrete samples were tested for water permeability. Pressure was gradually increased over five days and then maintained at 7 bars (224 ft. / 68.3 m water head) for 10 days. While the six reference samples showed water leakage beginning on the fifth day and increasing throughout the test period, the Xypex Admix samples showed no water leakage at any time during the test.

ACCI Water Permeability Test, "Water Permeability of Concrete", Australia Centre of Construction and Innovation, University of New South Wales, Sydney, Australia

Concrete samples containing Xypex Admix NF at a dosage rate of 0.8% and 1.2% were tested for water permeability against control samples. All the samples were subjected to a pressure of 10 bars (100 meters / 328 ft. water head) for 2 weeks. Water permeability coefficients were calculated and the Xypex Admix-treated concrete showed significant reduction in water permeability by up to 93% at a dosage rate of 1.2%.

STN EN 12390-8, "Testing of Hardened Concrete; Depth of Water Penetration Under Pressure", Technical and Testing Construction Institute, Bratislava, Slovakia

Concrete cubes were prepared with Admix C-1000 at 2% and Admix C-1000 NF at 1% along with control cubes. A water pressure of 0.5 MPa was applied for 72 hrs and specimens were subsequently split transversely to measure depth of water penetration. Depth results for C-1000/C-1000 NF were 10.3 mm and 25 mm respectively, whereas penetration on control samples was 113 mm. In using the Valenta equation to calculate the water permeability coefficient, the C-1000/C-1000 NF treated concrete showed a 20 to 120x reduction compared to the control concrete.

COMPRESSIVE STRENGTH

ASTM C 39, "Compressive Strength of Cylindrical Concrete Specimens", Kleinfelder Laboratories, San Francisco, USA

At 28 days, the compressive strength test of the concrete containing Xypex Admix measured 7160 psi / 49.5 MPa as compared to the reference sample at 6460 psi / 44.5 MPa (a 10% increase).

CHEMICAL RESISTANCE

CSN 73 1326, "Measuring Loss of Surface Due to Sulphate Attack of Concrete Treated with Admix C-1000 and Admix C-1000 NF", Betonconsult, Building Materials Testing Laboratory, Prague, Czech Republic

Concrete specimens treated with Admix C-1000 at 1% and 2%, and Admix C-1000 NF at 0.5% and 1% were cast along with non-treated concrete specimens. The specimens were exposed to a highly concentrated sulphate solution (i.e. 36,000 mg/ℓ) for 4 months and samples were periodically weighed to determine mass loss. The Admix treated samples recorded a mass loss between 5 and 50 g/m^2 and showed no surface deterioration, while the non-treated specimens measured an average mass loss of 4,860 g/m^2 with significant surface deterioration.

HB 84-2006 ,"Durability Assessment of Reinforced Concrete Structure Containing Xypex Admix Exposed to 19 Years of Severe Marine Environment", Sharp and Howells Pty. Ltd. Chemical Laboratories, Victoria, Australia

Lascelles Wharf serves as a bulk chemical and grain dock. In 1995, as part of an extensive maintenance program and to protect new precast concrete panels from the extremely harsh and aggressive marine environment, the concrete was dosed with Xypex Admix C-2000 NF at 1%. Recently tests were conducted to predict "initiation time to corrosion". Extracted cores were tested for chloride content at incremental depths into the concrete. Chloride content profiles, concrete cover, surface chloride content, and chloride corrosion threshold were used in a model based on Fick's 2nd law to predict the residual service life of this structure. The average initiation time to corrosion was estimated at 164 years; whereas, the structure had been designed for 50 years of service life.

NT BUILD 443, "Chloride Diffusion by NordTest with 16.5% NaCl Solution of 40 MPa Concrete Containing Admix C-1000 NF", Australia Centre for Construction Innovation, University of New South Wales, Sydney, Australia

The NordTest NT BUILD 443 is a standard accelerated method for evaluation of the chloride diffusion coefficient of concrete. In this test program, concrete mixes with 25% fly ash, 38% slag, and 60% slag were cast (total cementitious content = 435 kg, 0.4 w/c). Xypex Admix C-1000 NF at 0.8% and 1.2% by weight of cementitious materials were

compared to control mixes (for each cement system). All specimens were immersed in a 16.5% NaCl solution for 35 days. Chloride diffusion coefficient was calculated based on the chloride profile, utilizing Fick's 2nd law. Admix treated fly ash concrete showed 25% reduced chloride diffusion coefficient for both 0.8% and 1.2% addition. The Admix treated 38% slag concrete recorded a 67% lower chloride diffusion coefficient at 0.8% addition and 75% lower at 1.2% addition. The reduction of chloride diffusion coefficient was 42% and 53% for high slag mixes for 0.8% and 1.2% addition respectively.

"Sulfuric Acid Resistance Test", Aviles Engineering Corporation, Houston, USA

Concrete containing Xypex Admix at different dosage rates including 3% specimens were tested against untreated control samples for sulfuric acid resistance. After immersion in the sulfuric acid, each sample was tested for weight loss on a daily basis until a weight loss of 50% or a definite response trend was obtained. The percentage weight loss of the samples containing Xypex Admix tested significantly lower than the control samples.

"Acid Resistance of Mortar Containing Xypex Admix C-1000 NF", Construction and Maintenance Technology Research Center (CONTEC), Sirindhorn International Institute of Technology (SIIT) - Thammasat University, Bangkok, Thailand

An acid testing regime was part of an extensive program to determine the benefit of the Xypex Admix C-1000 NF dosed at 1% to improve the durability of concrete. Several comparative mixes were utilized in this evaluation, including: a plain Portland cement and a 30% fly ash mix. Cured samples were exposed to 5% H_2SO_4; the pH value of this acid solution was 0.25 and never greater than 0.54 pH. In this extremely acidic, corrosive environment, at 12 weeks the Admix samples reduced the weight loss by 48% compared to controls of the cement-only mortar, and 53% in the fly ash specimens.

CRACK SEALING

ASTM C1585 and ASTM C1202, "Evaluation of Self-healing Capability of Self-compacting Concrete Made with Blast-furnace Slag Cements Activated by the Xypex Crystalline Catalyst", Instituto Tecnologico de Aeronautica, Sao Jose dos Campos, Brazil

Portland, blast furnace slag and slag-modified Portland concrete samples, treated with 2.5% Admix C-500, were evaluated for self-healing capabilities. Microcracks were induced by loading to 90% of ultimate compressive strength. Cracked samples were then immersed in water to trigger self-healing after 28, 56 and 84 days. Strength and ultrasonic pulse velocity tests were used to determine mechanical recovery; sorptivity and rapid chloride permeability were used to evaluate watertightness recovery. Results substantiated the ability of Xypex Admix to provide self-healing of cracked concrete.

"Testing of Xypex Admix C-1000 NF Crack Healing Capabilities", CH Karnchang (Lao) Company Ltd., Xayaburi Laboratory, Ban Xieng Yeun, Vientiane, Laos

Prior to construction of a Mekong River dam, testing was undertaken to substantiate the ability of Xypex Admix to self-heal static cracks up to 0.4 mm. Three large concrete slabs treated with Admix C-1000 NF at 0.8% were cast along with three control slabs. Following curing, a force was applied at the mid-point of each slab to create cracks; on average measuring 0.4 mm width. Water was ponded above the cracked area. Initially all cracks leaked; at 4 days all dripping had ceased from the cracks of the Xypex treated panels, while leaking continued through the cracks of the control slab until the end of the test period (25 days). SEM photographs showed significant crystalline growth throughout the cracks of the Admix treated slab.

SCANNING ELECTRON MICROSCOPY

SEM "Microscopic Examination of Crystalline Products in Three Xypex Admix Modified Concrete Mortars", Australian Centre for Construction Innovation, University of New South Wales, Sydney, Australia

Slag and fly ash blended cement samples were treated with Xypex Admix and examined for evidence of crystalline growth at ages ranging from 8 months to 2 years. Samples were sliced and/or split and examined at magnifications between 500x and 5000x. Characteristic Xypex crystalline growth was observable on all Xypex treated samples, providing evidence of Xypex crystalline reactions with fly ash and slag blended cements.

FREEZE/THAW DURABILITY

ASTM C 666, "Freeze/Thaw Durability", Independent Laboratory, Cleveland, USA

After 300 freeze/thaw cycles, the Xypex Admix-treated samples indicated 94% relative durability.

POTABLE WATER EXPOSURE

NSF 61, "Drinking Water System Component-Health Effects", NSF International, Ann Arbor, USA

Exposure testing of potable water in contact with Xypex-treated samples indicated no harmful effects.

Directions for Use

Xypex Admix C-500/C-500 NF is added to the concrete at the time of batching. It is important to obtain a homogeneous mixture of Xypex Admix with the concrete. Do not add dry Admix powder directly to wet mixed concrete as this could cause clumping and thorough dispersion may not occur. The sequence of procedures for addition will vary according to the type of batch plant operation and equipment. The following methods have been used successfully in the past and it is recommended that the local Xypex Technical Services Representative be consulted about the best method to use.

1. ADDITION TO COARSE AGGREGATE BELT Add Xypex Admix powder directly to the coarse aggregate conveyor belt manually or through computer controlled mass batching system. Account for worker health and safety issues with moving belts and wind-blown dust issues.

2. TRUCK ADDITION (AT PLANT) Add Xypex Admix in bulk powder or soluble bag form to the drum of the ready-mix truck immediately prior to driving the truck under the batch plant and adding the balance of the materials or the premixed concrete in accordance with standard concrete batching practices. Measures to ensure soluble bags are dispersed include adding the bags as far forward in the drum as possible, adding a small amount of batch water with the bags, and spinning the drum prior to adding remaining ingredients. Avoid delays in adding other components and utilize high speed mixing to ensure homogeneity of mix. Where there may be insufficient water for thorough dispersion of the bulk powder, a water slurry can be made with the Admix and added to the truck mixer drum prior to batching. Account for added water in the mix design and slump.

3. ADDITION TO CENTRAL MIXER Load the Admix in bulk powder form or in soluble bags along with the other components. Mix as per standard batching practices to ensure thorough dispersal of the Admix resulting in a homogeneous mixture. Account for worker safety issues when accessing the equipment.

NOTE:

i. Although addition on site in powder form is not normally recommended, it may be necessary. In such a case, add Xypex Admix to truck in slurry form (e.g. 3 parts powder to 2 parts water by volume). Mix concrete for a minimum of 5 minutes on high speed or until thoroughly dispersed. Account for added water in the mix design and slump.

ii. Concrete containing the Xypex Admix does not preclude the requirement for design of crack control, construction joint detailing, proper placement, consolidation and curing of the concrete and measures for repairing defects such as honeycombing, tie holes, cracks beyond specified limits.

iii. Further guidelines are available that address the use of Xypex Admix for a specific situation, (e.g. dry mixes, use of ice in hot ambient conditions, cold-weather concreting, etc.). Consult with a local Xypex Technical Services Representative or Xypex's Technical Services Department for further information.

Setting Time and Strength

The setting time of concrete is affected by the chemical and physical composition of ingredients, temperature of the concrete and climatic conditions. Xypex Admix C-500/C-500 NF is designed to have minimal or no effect on setting time. Concrete containing the Xypex Admix C-500/C-500 NF may develop higher ultimate strengths than plain concrete. Trial mixes should be carried out under project conditions to determine the setting time and strength of the concrete dosed with Xypex Admix C-500/C-500 NF. Consult with a Xypex Technical Services Representative for the most appropriate Xypex Admix for your project.

Limitations

When incorporating Xypex Admix, the temperature of the concrete mix should be above 40ºF (4ºC).

Technical Services

For more instructions, alternative installation methods, or information concerning the compatibility of the Xypex treatment with other products or technologies, contact the Technical Services Department of Xypex Chemical Corporation or your local Xypex Technical Services Representative.

Certification

Xypex Admix satisfies the requirements of EN-934-2; Initial Type Testing (ITT) according to EN-934-2 was certified by BSI as the Notifying Body.

Safe Handling Information

Xypex is alkaline. As a cementitious powder or mixture, Xypex may cause significant skin and eye irritation. Directions for treating these problems are clearly detailed on all Xypex pails and packaging. The Manufacturer also maintains comprehensive and up-to-date Safety Data Sheets on all its products. Each sheet contains health and safety information for the protection of workers and customers. The Manufacturer recommends you contact Xypex Chemical Corporation or your local Xypex Technical Services Representative to obtain copies of Safety Data Sheets prior to product storage or use.

Warranty

The Manufacturer warrants that the products manufactured by it shall be free from material defects and will be consistent with its normal high quality. Should any of the products be proven defective, the liability to the Manufacturer shall be limited to replacement of the product ex factory. The Manufacturer makes no warranty as to merchantability or fitness for a particular purpose and this warranty is in lieu of all other warranties expressed or implied. The user shall determine the suitability of the product for his intended use and assume all risks and liability in connection therewith.

CE

XYPEX®
13731 Mayfield Place, Richmond, BC, Canada V6V 2G9 Toll-free: 1.800.961.4477
Tel: 604.273.5265 Fax: 604.270.0451 E-mail: info@xypex.com Web: www.xypex.com
XYPEX is a registered trademark of Xypex Chemical Corporation. Copyright © 1997-2016 Xypex Chemical Corporation.
ISO 9001:2008
FM 63167

SUBMITTALS IDENTIFICATION SHEET

PROJECT: Wastewater Treatment Plant Upgrade
Iqaluit, Nunavut

NUNAMI
STANTEC LIMITED
1088C Noble House
Iqaluit NU
www.stantec.com

CONTRACTOR: Kudlik Construction Ltd, Project 2018-062

Telephone: 867-979-1166

E-mail: srousseau@kudlik.biz

SUBCONTRACTOR: Structure MH

Person responsible: Moise Harvey

Telephone: (418)487-8772 E-mail: structures.mh@gmail.com

PRODUCT SUBMITTED:

☑ As Specified

☐ Alternate

SUPPLIER or MANUFACTURER:

Person responsible:

Telephone: E-mail:

DESCRIPTION OF SUBMITTAL:

# of pages:

Reference to drawings:

Reference to specs:

Division: 05 Section: 05 12 23 - 05 21 00

REMARKS:

REVIEW AND COMMENTS (for use by Consultants):

STANTEC PROJECT #: 110126045

SUBMITTAL # Fine Screen Platform Steel Structure

This review by Stantec is for general conformance with the design concept of Stantec's design of the:

☐ Architectural ☐ Electrical
☑ Structural ☐ Other
☐ Mechanical

component(s) only and does not mean that Stantec has verified or approves the shop drawing(s). The Contractor remains solely responsible for the shop drawing(s) and this review by Stantec does not relieve the Contractor of the Contractor's responsibility for errors or omissions in the shop drawing(s) or for meeting all requirements of the contract documents. This review does not mean that Stantec approves the detailed design inherent in the shop drawing, responsibility for which shall remain with the Contractor submitting same, nor does this review mean that Stantec accepts any deviation of the shop drawing(s) from the contract documents. The Contractor is responsible for confirming all dimensions and correlating them at the job site, for all construction means, methods and techniques, and for coordination of construction work of all trades, including coordination of all shop drawings.

Stantec

☐ REVIEWED
☑ REVIEWED, AS NOTED
☐ REVISE AND RESUBMIT
☐ NOT REVIEWED

DATE 2018-08-24

BY Petr Polivka

All members shall be galvanized as per construction documents.

Change the bracing direction as shown on page 2,3,4,5,20,21.

Review of this submission is for compliance with general intent of the contract. This review does not relieve the Sub-Contractor, Supplier or Manufacturer of responsibility for error or omissions in the submission or the responsibility of meeting all requirements of the contract documents. Any deviation from the contract documents initiated by the Sub-Contractor, Supplier or Manufacturer shall be at their sole risk. QUANTITIES AND DETAIL DIMENSIONS ARE THE SUB-CONTRACTORS OR SUPPLIERS RESPONSIBILITY. VERIFY DATA WITH FIELD DIMENSIONS.

SUBMITTAL TRACKING No.: **STC-008 rev 1**

2018-08-22

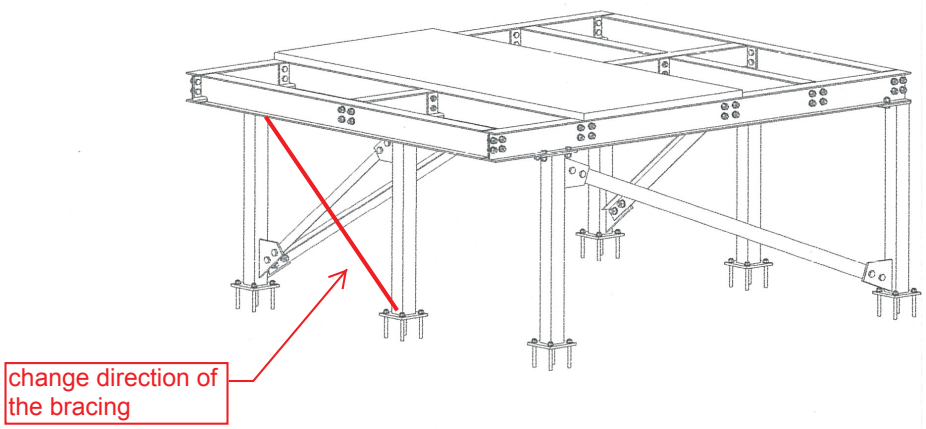

3D VIEW SCREEN PLATFORM

PROJET :

IQALUIT WASTEWATER
TREATMENT PLANT
UPGRADE

ANCRAGE TYPIQUE :
-4x HILTI HSA M16X150/25/45 on base plate

TYPICAL COLUMN :
HSS 3½ X 3½ X 3/16

REGISTERED PROFESSIONAL ENGINEER
J. TRUDEAU
LICENSEE
NT/NU

Rev.	Date	Par	Description
REV-A	2018-08-20	Julie Lajoie	Correction apporter tel que demander en date du 8 août 2018

STRUCTURES M.H. inc.
ENTREPRENEUR GÉNÉRAL
1670 Av. de la Technologie, Alma G8C 1E9
Téléphone : 418 480-2186 Télécopieur : 418 668-9235
structures.mh@gmail.com
RBQ : 5612-0215-01

Date : 2018-08-20

INGÉNIEUR : Const. Gely

Client : Const. Gely

Projet : Screen Platform (Iqaluit Wastewater)

No. Projet : MH.2018.0839_ST

Détaillé par : Julie Lajoie

TITRE : Screen Platform (Iqaluit - Wastewater) Base Plate

Structure : ETRXSELECT
Titre : 13/11/2018 min
Acier :
Peinture :

No. Dessin : ST00

Sequence : REV-A

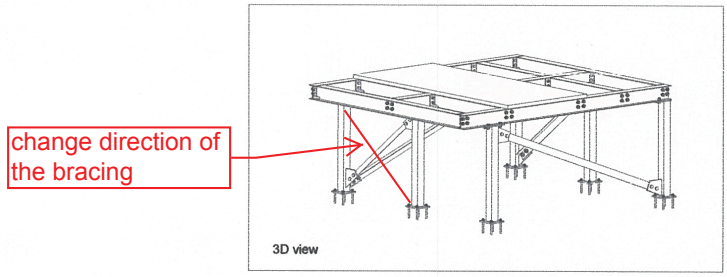

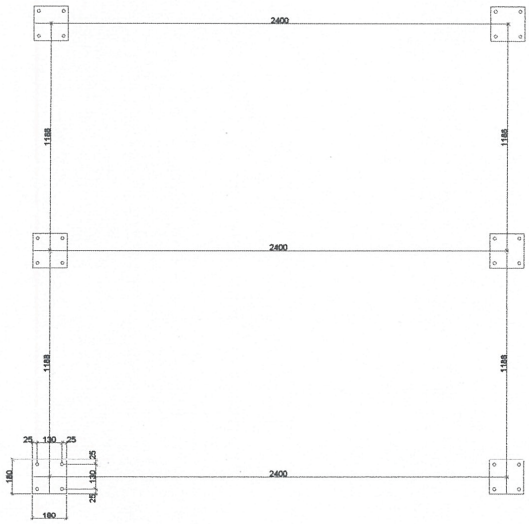

PROJET :

IQALUIT WASTEWATER TREATMENT PLANT UPGRADE

ANCRAGE TYPIQUE :
-4x HILTI HSA M16X150/25/45 on base plate

TYPICAL COLUMN :
HSS 3½ X 3½ X 3/16

REGISTERED PROFESSIONAL ENGINEER
J. TRUDEAU
LICENSEE
NT/NU

Rev.	Date	Par	Description
REV-A	2018-08-20	Julie Lajoie	Correction apporter tel que demander en date du 8 août 2018

STRUCTURES M.H. inc.
ENTREPRENEUR GÉNÉRAL
5670 Av. de la Technologie, Alma CIC 1E0
Téléphone : 418 480-2156 Télécopieur : 418 668-5235
structures.mh@gmail.com
RBQ : 5612-0215-46

Date : 2018-08-20

INGÉNIEUR : Const. Gely

Client : Const. Gely

Projet : Screen Platform (Iqaluit Wastewater)

No. Projet : MH.2018.0839_ST

Détaillé par : Julie Lajoie

TITRE : Plan view of Baseplates

Structure :	ETEXSELECT	No. Dessin :	ST01
Trou :	1/8"x3/4"x4		
Acier :	G40.21		
Peinture :	Aucun	Sequence :	REV-A

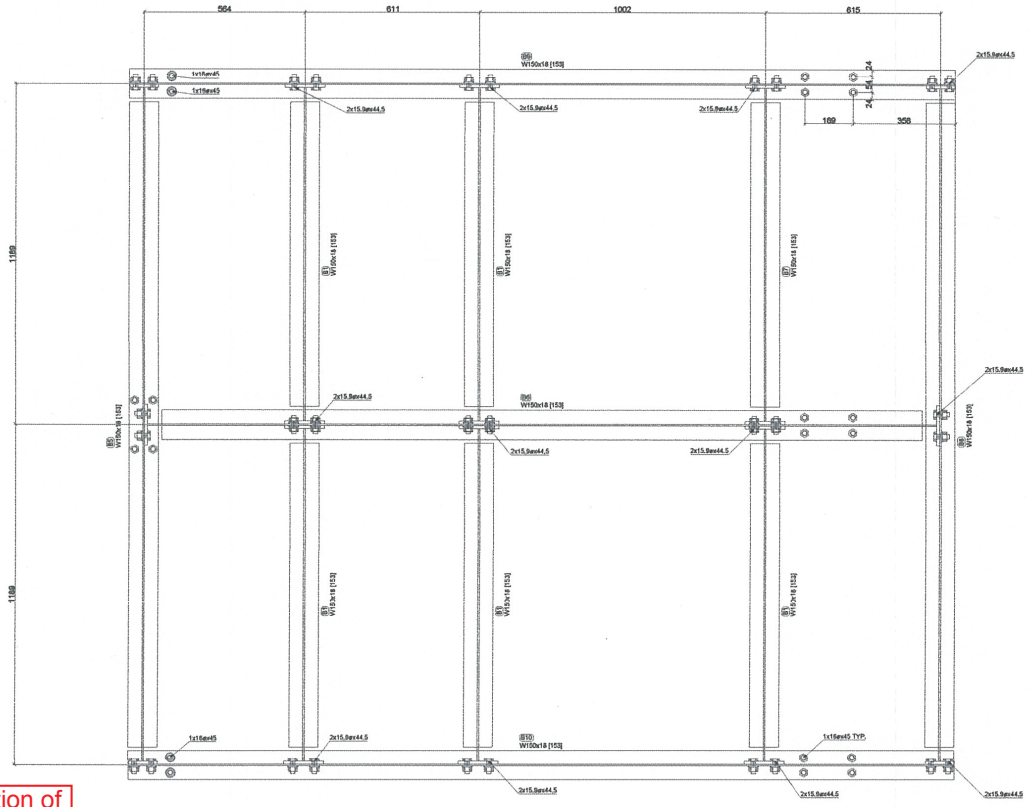

Plan view Above Beams

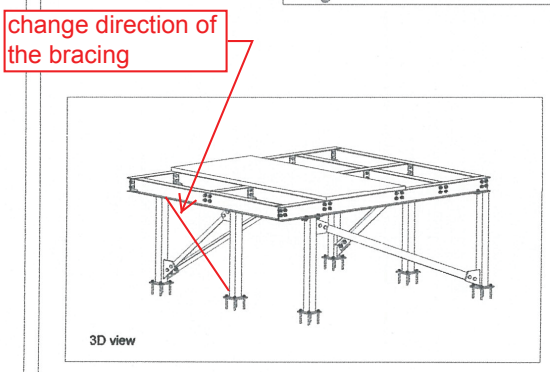

3D view

PROJET :

IQALUIT WASTEWATER TREATMENT PLANT UPGRADE

ANCRAGE TYPIQUE :
-4x HILTI HSA M16X150/25/45 on base plate

TYPICAL COLUMN :
HSS 3½ X 3½ X 3/16

REGISTERED PROFESSIONAL ENGINEER
J. TRUDEAU
LICENSEE
NT/NU

Rev.	Date	Par	Description
REV-A	2018-08-20	Julie Lajoie	Correction apporter tel que demander en date du 8 août 2018

STRUCTURES M.H. inc.
ENTREPRENEUR GÉNÉRAL
5670 Av. de la Technologie, Alma G8C 1E3
Téléphone : 418 480-2186 Télécopieur : 418 668-9235
structures.mh@gmail.com
RBQ : 5612-0215-01

Date : 2018-08-20

INGÉNIEUR : Const. Gely

Client : Const. Gely

Projet : Screen Platform (Iqaluit Wastewater)

No. Projet : MH.2018.0639_ST

Détaillé par : Julie Lajoie

TITRE : Screen Platform (Iqaluit - Wastewater) Above Beams

Structure : ETRXXSELECT
Trois : 1.5/1.5*18 min
Acier : 300W:G40.21
Peinture : Aucun,Galvanisé

No. Dessin : ST02

Sequence : REV-A

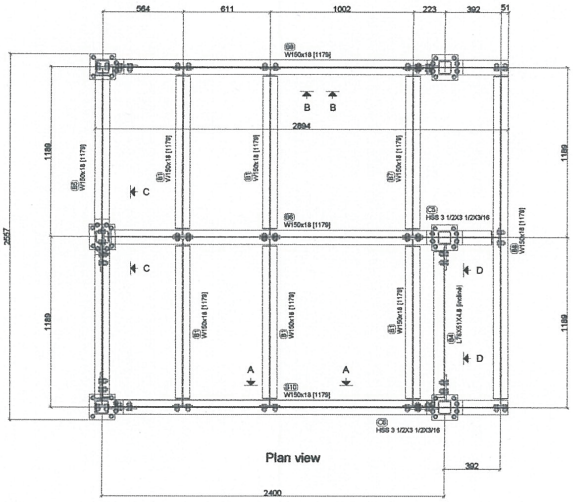

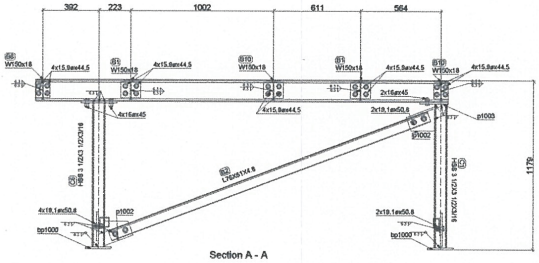

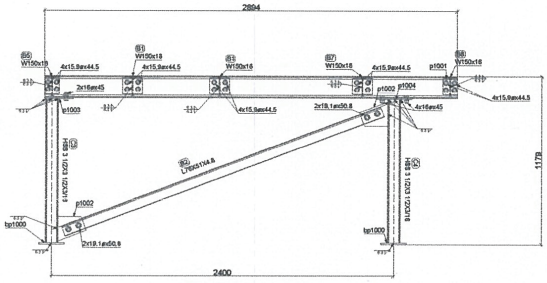

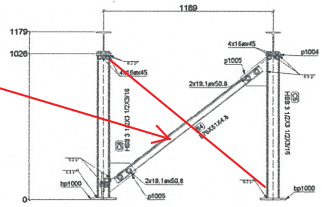

change direction of the bracing

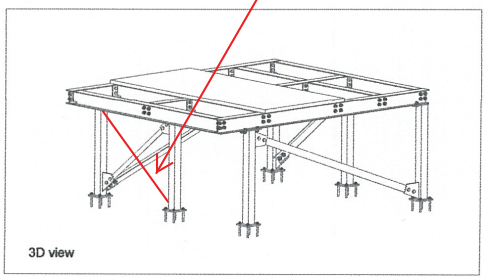

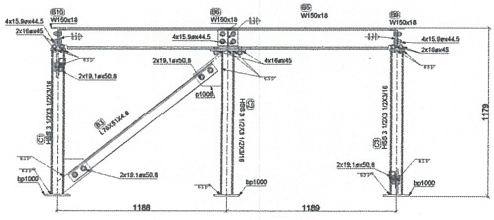

PROJET :

IQALUIT WASTEWATER TREATMENT PLANT UPGRADE

ANCRAGE TYPIQUE :
-4x HILTI HSA M16X150/25/45 on base plate

TYPICAL COLUMN :
HSS 3½ X 3½ X 3/16



Rev.	Date	Par	Description
REV-A	2018-08-20	Julie Lajoie	Correction apporter tel que demander en date du 8 août 2018

STRUCTURES M.H. inc.
ENTREPRENEUR GÉNÉRAL
3429 Av. de la Technologie, Alma (QC) E8I
Téléphone : 418-480-2356 Télécopieur : 418 668-5235

Date : 2018-08-20

INGÉNIEUR : Const. Gely

Client : Const. Gely

Projet : Screen Platform (Iqaluit Wastewater)

No. Projet : MH.2018.0839_ST

Détaillé par : Julie Lajoie

TITRE : Sectional View

Soudure :	ESSABLECT
Trou :	1/64 po ale
Acier :	300W350R/A500 GR.B/G40.21
Peinture :	Fusion Galvanisé

No. Dessin : ST03

Révision : REV-A

Marque	Quantité	Description	Longueur	Nuance	Finition	Poids	Poids total
B1	5	Poutre					
p1000	5	W150x18	1162.7	350W	Galvanisé	46.140	230.698
p1000	10	PL110x115x140	140.0	G40.21		2.689	26.894
	15					51.518	257.592
	15						257.592

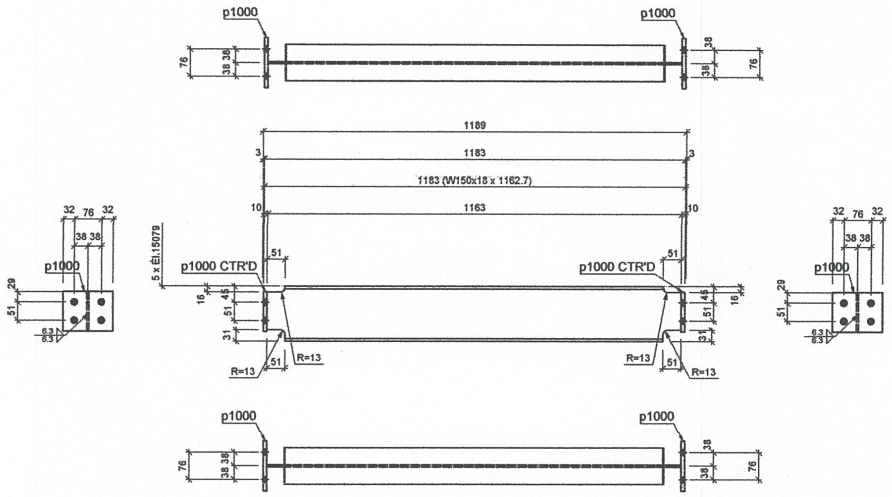

5 - B1 W150x18

d=153 b=102 t=7.1 w=5.8 k=19

Grid reference (1-2/A-B), (1-2/A-B), (1-2/A-B), (1-2/A-B), (1-2/A-B)

REGISTERED PROFESSIONAL ENGINEER
J. TRUDEAU
LICENSEE
NT/NU

Rev.	Date	Par	Description
REV-A	2018-08-20	Julie Lajoie	Correction apporter tel que demander en date du 8 août 2018

Projet : Screen Platform (Iqaluit Wastewater)

No. Projet : MH.2018.0839_ST

Statut : Révisé	Commentaire :	
Détaillé par : Julie Lajoie	Trou : 13/16"Ø u/n	Client : Const. Gely
Vérifié par: Const. Gely	Soudure : E70XXELECT	No. Dessin : B1
STRUCTURES M.H. inc. ENTREPRENEUR GÉNÉRAL	Acier : 350W	
	Peinture: Galvanisé	Sequence : REV-A
	Date : 2018-08-20	

Quantité	Description	Longueur	Finition
40	15.8x A325	44	

Marque	Quantité	Description	Longueur	Nuance	Finition	Poids	Poids total
B6	2	Cisaillement diagonal					
B1001	2	L76X51X4.8	2385.7	300W	Galvanisé	23.668	47.337
	2					23.668	47.337
	2						47.337

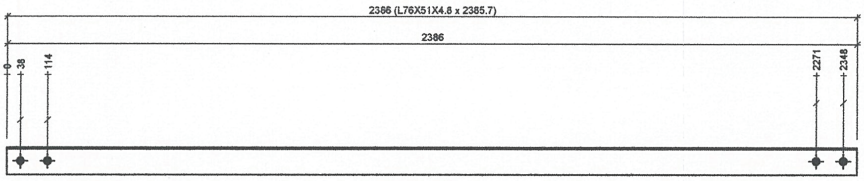

2 - B2 L76X51X4.8
Grid reference (A-B/1-2), (A-B/1-2)

REGISTERED PROFESSIONAL ENGINEER
J.G. BÉDEAU
LICENSEE
NT/NU

Quantité	Description	Longueur	Finition

Rev.	Date	Par	Description
REV-A	2018-08-20	Julie Lajoie	Correction apporter tel que demander en date du 8 août 2018

Projet : Screen Platform (Iqaluit Wastewater)
No. Projet : MH.2018.0839_ST

Statut : Révisé	Commentaire :	
Détaillé par : Julie Lajoie	Trou : 13/16"Ø u/n	Client : Const. Gely
Vérifié par: Const. Gely	Soudure : E70XXELECT	No. Dessin :
STRUCTURES M.H. inc. ENTREPRENEUR GÉNÉRAL	Acier : 300W	B2
	Peinture: Galvanisé	Sequence : REV-A
	Date : 2018-08-20	

Marque	Quantité	Description	Longueur	Nuance	Finition	Poids	Poids total
B3	1	Contreventement diagonal					
9/1002	1	L76X51X4.8	1270.2	300W	Galvanisé	12.601	12.601
	1					12.601	12.601
	1						12.601

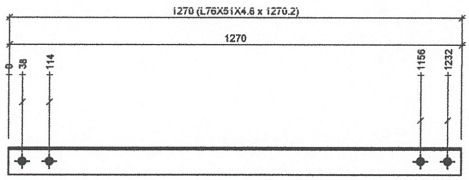

1 - B3 L76X51X4.8
Grid reference (1-2/A-B)

REGISTERED PROFESSIONAL ENGINEER
J. TRUDEAU
LICENSEE
NT/NU

Rev.	Date	Par	Description
REV-A	2018-08-20	Julie Lajoie	Correction apporter tel que demander en date du 8 août 2018

Projet : Screen Platform (Iqaluit Wastewater)
No. Projet : MH.2018.0839_ST

Statut : Révisé	Commentaire :	
Détaillé par : Julie Lajoie	Trou : 13/16"Ø u/n	Client : Const. Gely
Vérifié par: Const. Gely	Soudure : E70XXELECT	No. Dessin : B3
STRUCTURES M.H. inc. ENTREPRENEUR GÉNÉRAL	Acier : 300W	
	Peinture: Galvanisé	Sequence : REV-A
	Date : 2018-08-20	

Quantité | Description | Longueur | Finition

Marque	Quantité	Description	Longueur	Nuance	Finition	Poids	Poids total
B4	1	Contreventement diagonal					
1/1000	1	L76X51X4.8	1290.0	300W	Galvanisé	12.798	12.798
	1					12.798	12.798
	1						12.798

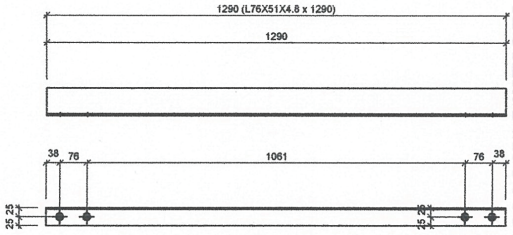

1 - B4 L76X51X4.8
Grid reference (1-2/A-B)

REGISTERED PROFESSIONAL ENGINEER
J. TRUDEAU
LICENSEE
NT/NU
2018/08/11

Rev.	Date	Par	Description
REV-A	2018-08-20	Julie Lajoie	Correction apporter tel que demander en date du 8 août 2018

Projet : Screen Platform (Iqaluit Wastewater)
No. Projet : MH.2018.0839_ST

Statut : Révisé	Commentaire :	
Détaillé par : Julie Lajoie	Trou : 13/16"Ø u/n	Client : Const. Gely
Vérifié par: Const. Gely	Soudure : E70XXELECT	No. Dessin : B4
STRUCTURES M.H. inc. ENTREPRENEUR GÉNÉRAL	Acier : 300W	
	Peinture: Galvanisé	Séquence : REV-A
	Date : 2018-08-20	

Quantité	Description	Longueur	Finition

Marque	Quantité	Description	Longueur	Nuance	Finition	Poids	Poids total
B5	1	Poutre					
p1007	1	W150x18	2351.2	350W	Galvanisé	93.303	93.303
p1001	2	PL110x100x111	111.91	G40.21		1.921	3.842
	3					97.145	97.145
	3						97.145

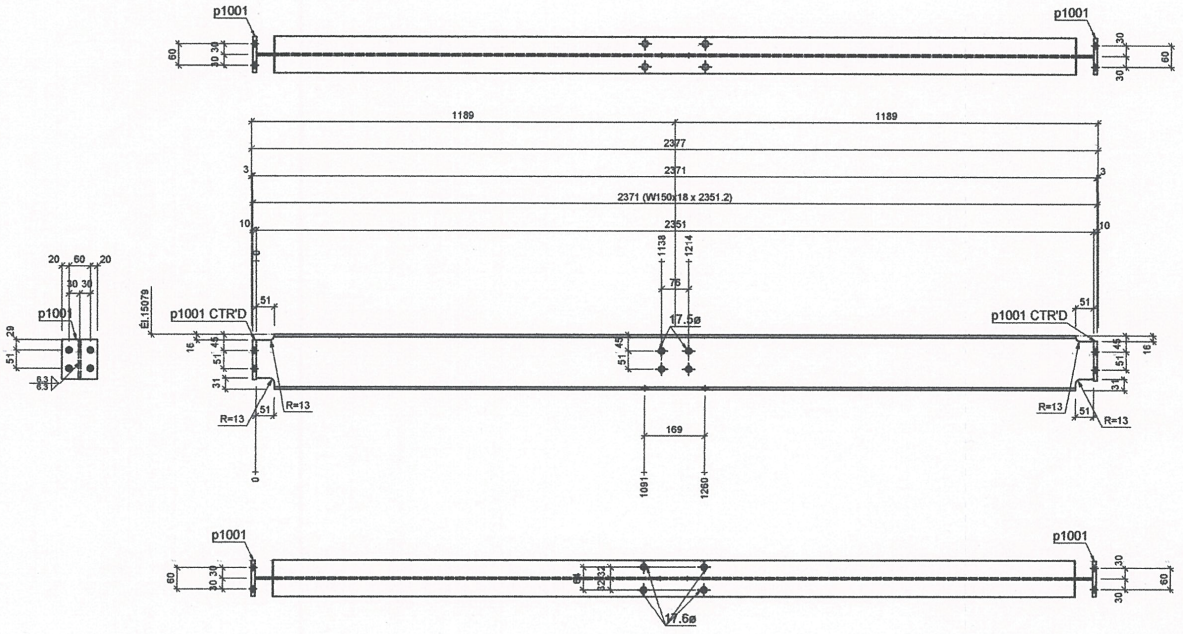

1 - B5 W150x18

d=153 b=102 t=7.1 w=5.8 k=19

Grid reference (1-2/A-B)

REGISTERED PROFESSIONAL ENGINEER
J. TRUDEAU
LICENSEE
NT/NU

Rev.	Date	Par	Description
REV-A	2018-08-20	Julie Lajoie	Correction apporter tel que demander en date du 8 août 2018

Projet : Screen Platform (Iqaluit Wastewater)

No. Projet : MH.2018.0839_ST

Statut : Révisé	Commentaire :	
Détaillé par : Julie Lajoie	Trou : 13/16"Ø u/n	Client : Const. Gely
Vérifié par: Const. Gely	Soudure : E70XXELECT	No. Dessin : B5
STRUCTURES M.H. inc. ENTREPRENEUR GÉNÉRAL	Acier : 350W	
	Peinture: Galvanisé	Sequence : REV-A
	Date : 2018-08-20	

Quantité	Description	Longueur	Finition
4	19x A5094	45	
8	16.5x A325	44	

Marque	Quantité	Description	Longueur	Nuance	Finition	Poids	Poids total
BE	1	Poutre					
b2006	1	W150x18	2766.2	350W	Galvanisé	109.777	109.777
p1000	2	PL11b/x11b140	140.9	0403.21		2.466	5.316
	3					115.150	115.150
	3						115.150

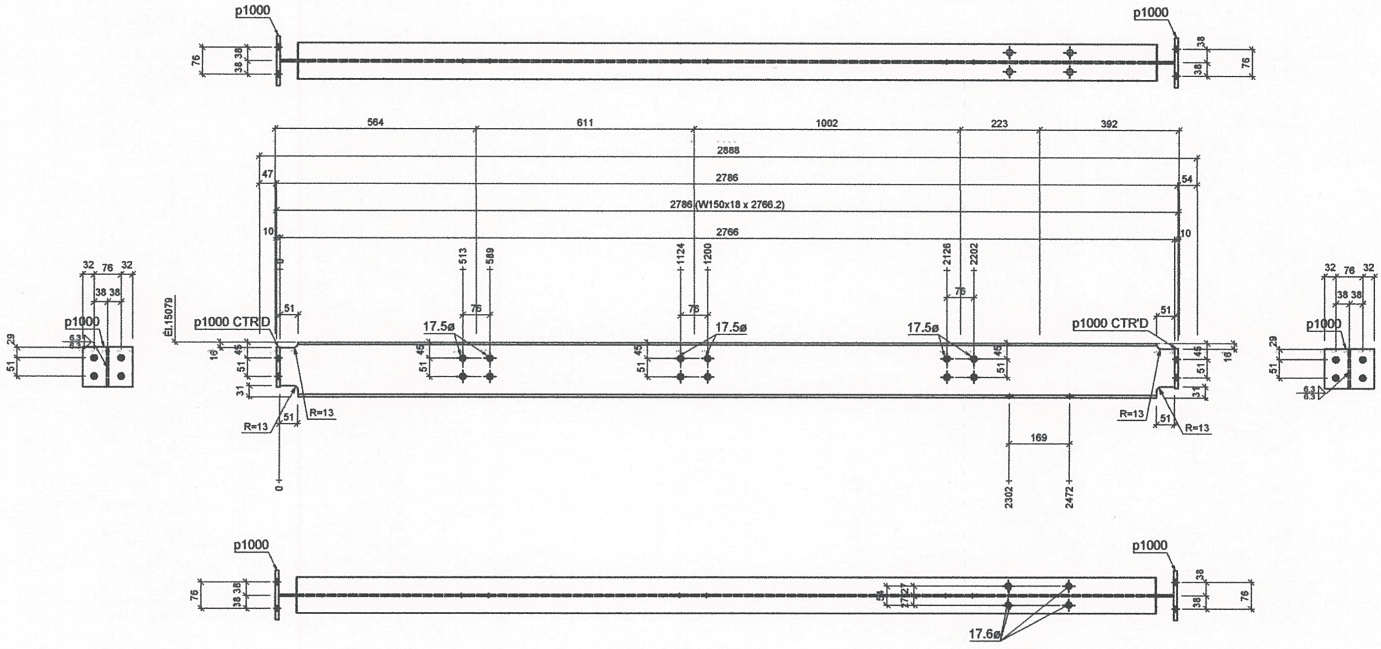

1 - B6 W150x18

d=153 b=102 t=7.1 w=5.8 k=19

Grid reference (A-B/1-2)

REGISTERED PROFESSIONAL ENGINEER
J. TRUDEAU
LICENSÉE
NT/NU

Quantité	Description	Longueur	Finition
4	16x Anchor	43	
6	16 Ser A325	44	

Rev.	Date	Par	Description
REV-A	2018-08-20	Julie Lajoie	Correction apporter tel que demander en date du 8 août 2018

Projet : Screen Platform (Iqaluit Wastewater)

No. Projet : MH.2018.0839_ST

Statut : Révisé	Commentaire :	
Détaillé par : Julie Lajoie	Trou : 13/16"Ø u/n	Client : Const. Gely
Vérifié par: Const. Gely	Soudure : E70XXELECT	No. Dessin : B6
STRUCTURES M.H. inc. ENTREPRENEUR GÉNÉRAL	Acier : 350W	
	Peinture: Galvanisé	Sequence : REV-A
	Date : 2018-08-20	

Marque	Quantité	Description	Longueur	Nuance	Finition	Poids	Poids total
B7	1						
b1000	1	W150x18	1162.7	350W	Galvanisé	46.140	46.140
p1000	2	PL1.10x111x149	140.0	G40.21		2.689	5.379
	3					51.518	51.518
	3						51.518

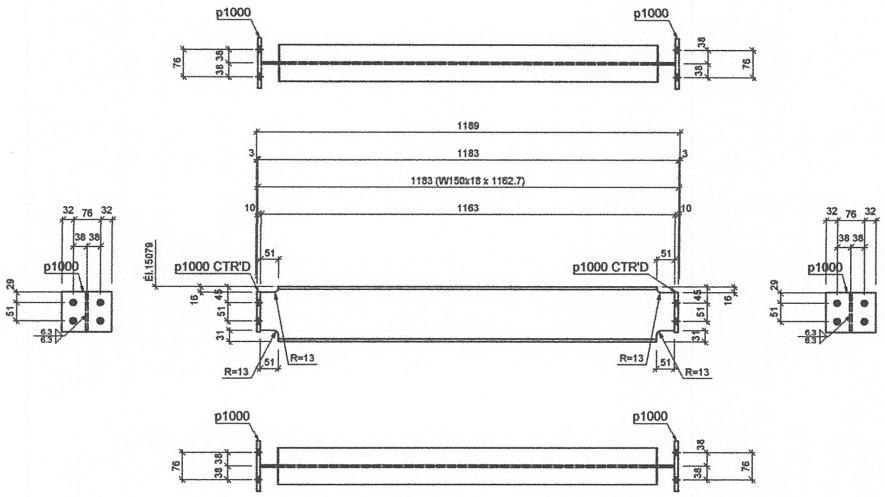

1 - B7 W150x18

d=153 b=102 t=7.1 w=5.8 k=19

Grid reference (1-2/A-B)

REGISTERED PROFESSIONAL ENGINEER
J. TRUDEAU
LICENSEE
NT/NU

Rev.	Date	Par	Description
REV-A	2018-08-20	Julie Lajoie	Correction apporter tel que demander en date du 8 août 2018

Projet : Screen Platform (Iqaluit Wastewater)

No. Projet : MH.2018.0639_ST

Statut : Révisé	Commentaire :	
Détaillé par : Julie Lajoie	Trou : 13/16"Ø u/n	Client : Const. Gely
Vérifié par: Const. Gely	Soudure : E70XXELECT	No. Dessin : B7
STRUCTURES M.H. inc. ENTREPRENEUR GÉNÉRAL	Acier : 350W	
	Peinture: Galvanisé	Sequence : REV-A
	Date : 2018-08-20	

Quantité	Description	Longueur	Finition
1	115.6x 3.335	44	

Marque	Quantité	Description	Longueur	Nuance	Finition	Poids	Poids total
B8	1						
b1008	1	W150x18	2351.2	350W	Galvanisé	93.303	93.303
p1001	2	PLT50x100x111	111.0	G40.21		1.921	3.842
	3					97.145	97.145
	3						97.145

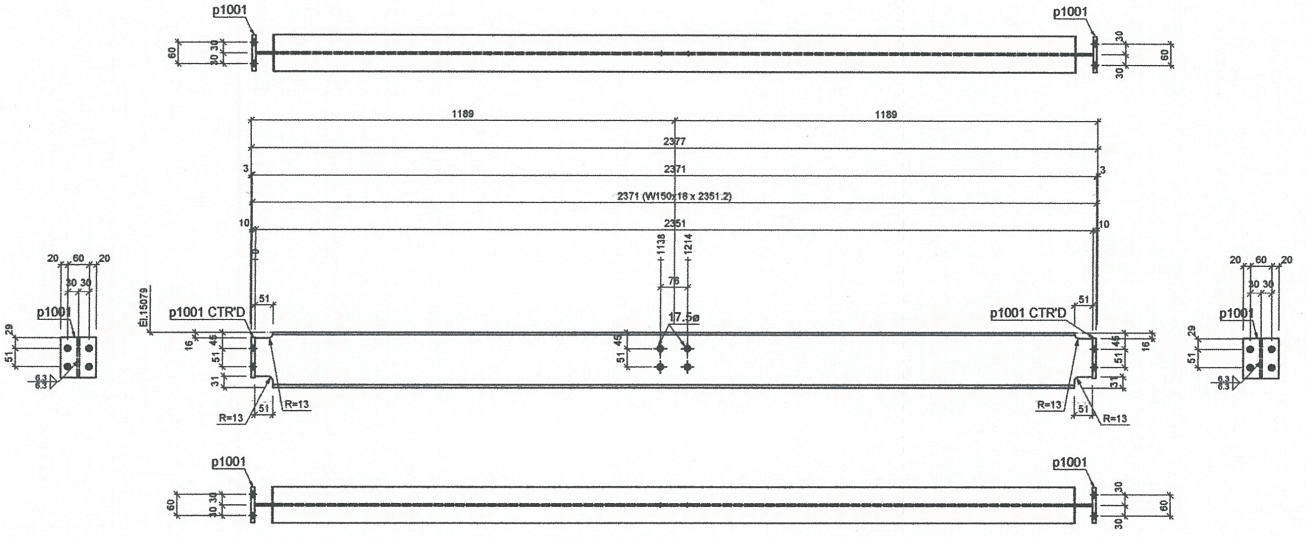

1 - B8 W150x18

d=153 b=102 t=7.1 w=5.8 k=19

Grid reference (1-2/A-B)

REGISTERED PROFESSIONAL ENGINEER
J. TROUDEAU
LICENSEE
NT/NU

Rev.	Date	Par	Description
REV-A	2018-08-20	Julie Lajoie	Correction apporter tel que demander en date du 8 août 2018

Projet : Screen Platform (Iqaluit Wastewater)

No. Projet : MH.2018.0839_ST

Statut : Révisé	Commentaire :	
Détaillé par : Julie Lajoie	Trou : 13/16"Ø u/n	Client : Const. Gely
Vérifié par: Const. Gely	Soudure : E70XXELECT	No. Dessin : B8
STRUCTURES M.H. inc. ENTREPRENEUR GÉNÉRAL	Acier : 350W	
	Peinture: Galvanisé	Sequence : REV-A
	Date : 2018-08-20	

Quantité	Description	Longueur	Finition
8	115.8x A305	44	

Marque	Quantité	Description	Longueur	Nuance	Finition	Poids	Poids total
B9	1	Pièce				114.843	114.843
B1004	1	W150x18	2894.0	350W	Galvanisé	114.843	114.843
	1						114.843

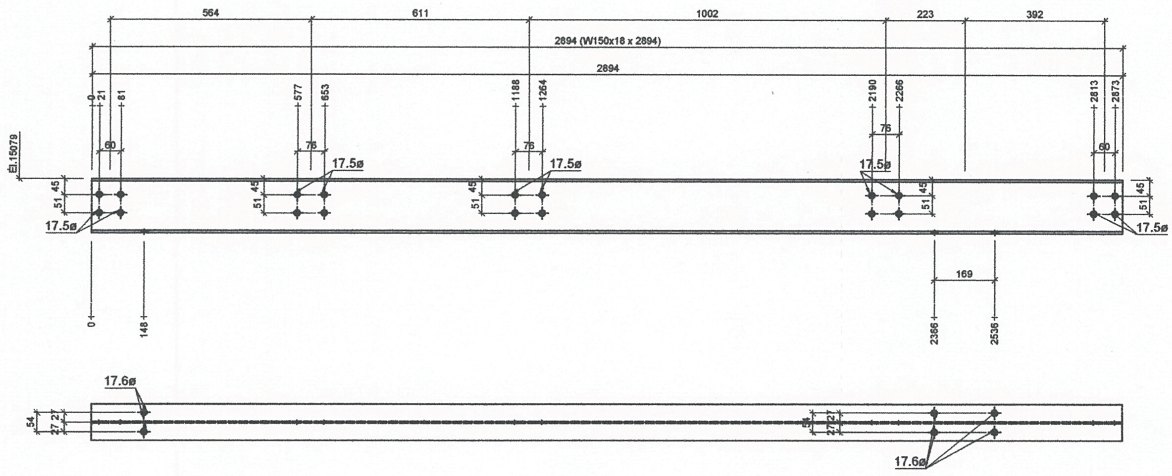

1 - B9 W150x18

d=153 b=102 t=7.1 w=5.8 k=19

Grid reference (A-B/1-2)

REGISTERED PROFESSIONAL ENGINEER
LICENSEE
NT/NU

Quantité	Description	Longueur	Finition
1	B9 W150x18	2894	

Rev.	Date	Par	Description
REV-A	2018-08-20	Julie Lajoie	Correction apporter tel que demander en date du 8 août 2018

Projet : Screen Platform (Iqaluit Wastewater)

No. Projet : MH.2018.0639_ST

Statut : Révisé	Commentaire :	
Détaillé par : Julie Lajoie	Trou : 13/16"Ø u/n	Client : Const. Gely
Vérifié par: Const. Gely	Soudure : E70XXELECT	No. Dessin : B9
STRUCTURES M.H. inc. ENTREPRENEUR GÉNÉRAL	Acier : 350W	
	Peinture: Galvanisé	Sequence : REV-A
	Date : 2018-08-20	

Marque	Quantité	Description	Longueur	Nuance	Finition	Poids	Poids total
B10	1	Poutre					
W1000	1	W150x18	2894.01	350W	Galvanisé	114.843	114.843
	1					114.843	114.843
	1						114.843

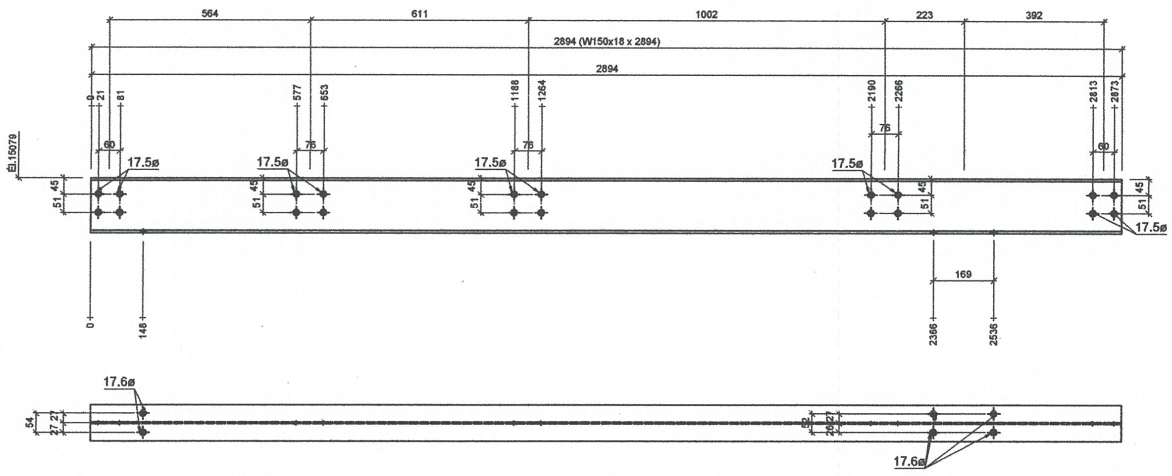

1 - **B10** W150x18

d=153 b=102 t=7.1 w=5.8 k=19

Grid reference (A-B/1-2)

Quantité	Description	Longueur	Finition
4	17ø A490M	45	

Rev.	Date	Par	Description
REV-A	2018-08-20	Julie Lajoie	Correction apporter tel que demander en date du 8 août 2018

Projet : Screen Platform (Iqaluit Wastewater)

No. Projet : MH.2018.0639_ST

Statut : Révisé	Commentaire :	
Détaillé par : Julie Lajoie	Trou : 13/16"Ø u/n	Client : Const. Gely
Vérifié par: Const. Gely	Soudure : E70XXELECT	No. Dessin :
STRUCTURES M.H. inc. ENTREPRENEUR GÉNÉRAL	Acier : 350W	B10
	Peinture: Galvanisé	Sequence : REV-A
	Date : 2018-08-20	

REGISTERED PROFESSIONAL ENGINEER
J. TRUDEAU
LICENSEE
NT/NU

Marque	Quantité	Description	Longueur	Nuance	Finition	Poids	Poids total
c1	1	Fabriqué					
c1000	1	HSS 3 1/2X3 1/2X3/16	1004.0	A500 GR.B	Galvanisé	27.004	27.004
bp1000	1	PL1+1x160x180	130.0	G40.21		6.729	6.729
p1000	1	PL1+2x1/8 x 200.0	203.0	G40.21		6.411	6.411
p1000	1	PL1+2x1/8 1/2x12.0	212.0	G40.21		6.433	6.433
p1000	1	PL1+1x10x200	200.0	G40.21		3.530	3.530
	5					49.107	49.107
	5						49.107

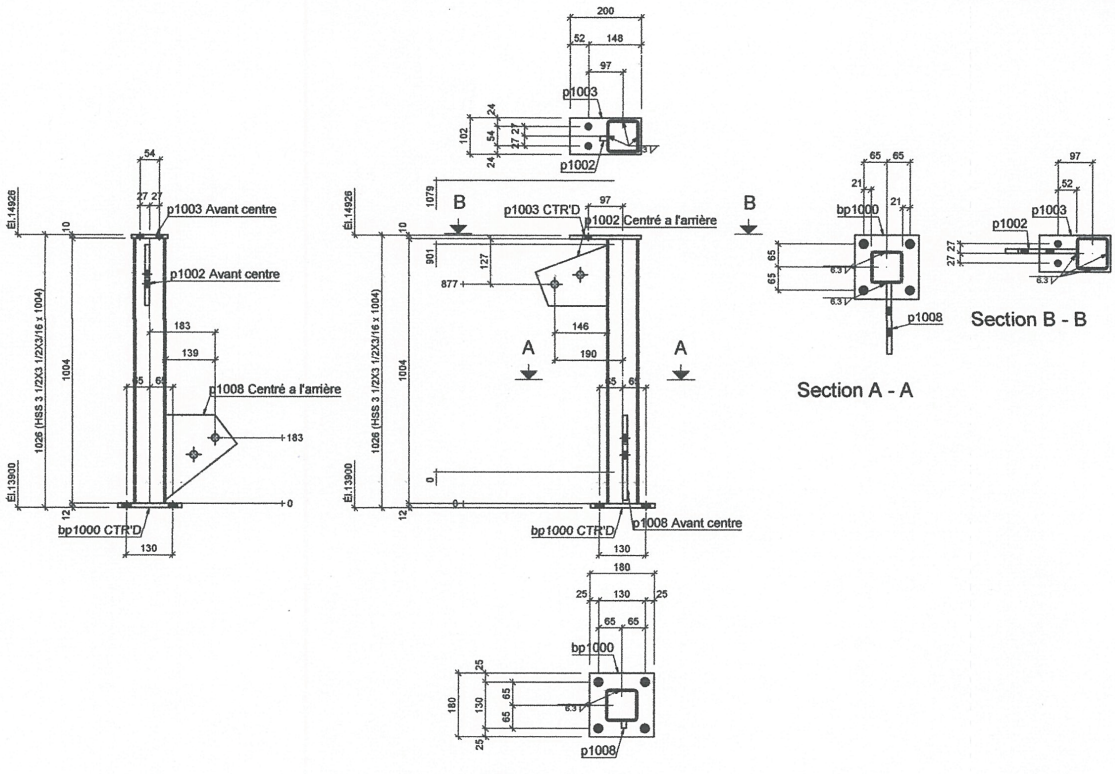

1 - C1 HSS 3 1/2X3 1/2X3/16

d=88.9 b=88.9 t=4.8 w=4.8 k=

Grid reference (A-B/1-2)

REGISTERED PROFESSIONAL ENGINEER
J. TRUDEAU
LICENSEE
NT/NU

Rev.	Date	Par	Description
REV-A	2018-08-20	Julie Lajoie	Correction apporter tel que demander en date du 8 août 2018

Projet : Screen Platform (Iqaluit Wastewater)

No. Projet : MH.2018.0839_ST

Statut : Révisé	Commentaire :	
Détaillé par : Julie Lajoie	Trou : 13/16"Ø u/n	Client : Const. Gely
Vérifié par: Const. Gely	Soudure : E70XXELECT	No. Dessin : C1
STRUCTURES M.H. inc. ENTREPRENEUR GÉNÉRAL	Acier : A500 GR.B	
	Peinture: Galvanisé	Sequence : REV-A
	Date : 2018-08-20	

Quantité	Description	Longueur	Finition
4	HSS A500	61	
2	Tôle A500	43	

Marque	Quantité	Description	Longueur	Nuance	Finition	Poids	Poids total
no	1	Assemblage					
c1000	1	HSS 3 1/2X3 1/2X3/16	1004.01	A500 GR.B	Galvanisé	27.0941	27.094
bp1000	1	PL12X180X180	180.01	G40.21		4.790	4.790
p1008	1	PL12X2.75X8.25X85.9	253.91	G40.21		6.411	6.411
p1007	1	PL12X152X250	250.01	G40.21		4.410	4.410
	3					44.597	44.597
	4						44.597

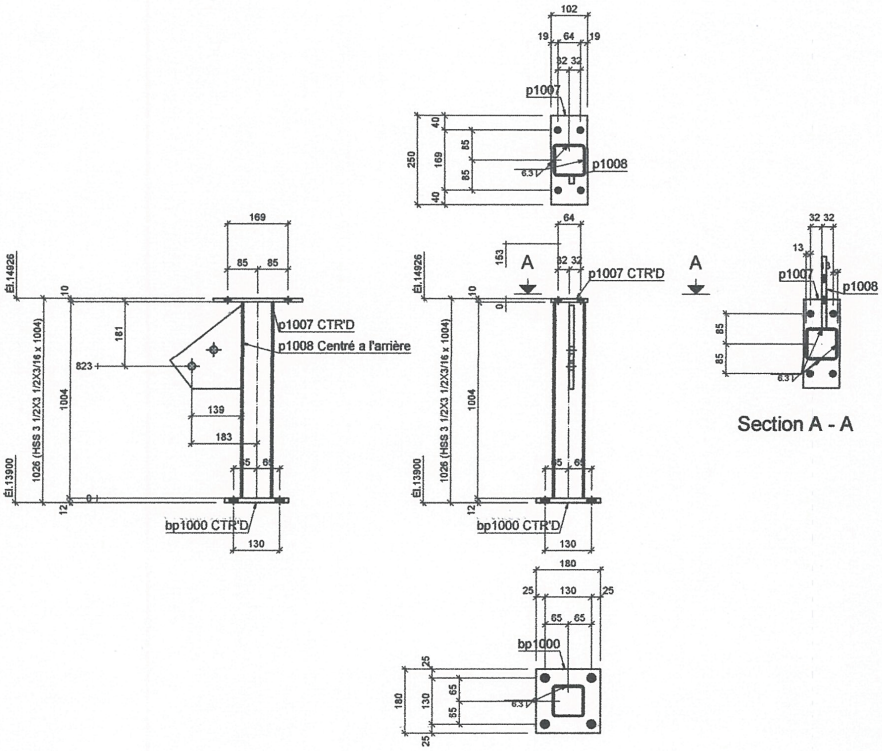

1 - C2 HSS 3 1/2X3 1/2X3/16

d=88.9 b=88.9 t=4.8 w=4.8 k=

Grid reference (A-B/1-2)

Quantité	Description	Longueur	Finition
2	HILTI KB3	81	

REGISTERED PROFESSIONAL ENGINEER
J. TRUDEAU
LICENSEE
NT/NU

Rev.	Date	Par	Description
REV-A	2018-08-20	Julie Lajoie	Correction apporter tel que demander en date du 8 août 2018

Projet : Screen Platform (Iqaluit Wastewater)

No. Projet : MH.2018.0839_ST

Statut : Révisé	Commentaire :	
Détaillé par : Julie Lajoie	Trou : 13/16"Ø u/n	Client : Const. Gely
Vérifié par: Const. Gely	Soudure : E70XXELECT	No. Dessin :
STRUCTURES M.H. inc. ENTREPRENEUR GÉNÉRAL	Acier : A500 GR.B	C2
	Peinture: Galvanisé	Sequence : REV-A
	Date : 2018-08-20	

Marque	Quantité	Description	Longueur	Nuance	Finition	Poids	Poids total
		Pièces					
c1000	1	HSS 3 1/2X3 1/2X3/16	1004.00	A500 GR.B	Galvanisé	37.604	37.604
bp1000	1	PL11x150x190	150.00	G40.21		6.120	6.120
p1002	1	PL11x210x190 TQ1X2	210.00	G40.21		5.431	5.431
p1003	1	PL11x150x200	300.00	G40.21		3.530	3.530
	1					42.604	42.604
	4						42.896

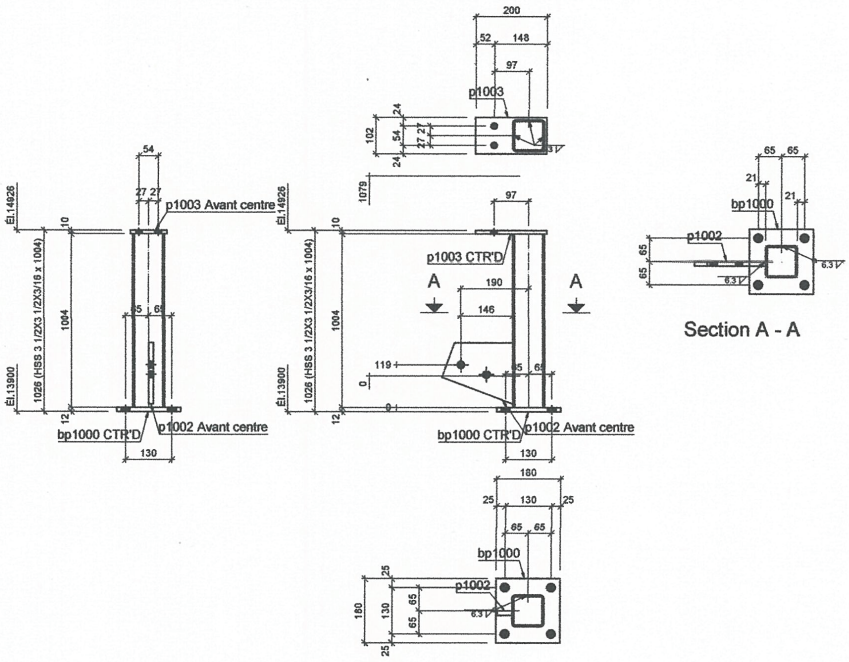

Section A - A

1 - C3 HSS 3 1/2X3 1/2X3/16

d=88.9 b=88.9 t=4.8 w=4.8 k=

Grid reference (A-B/1-2)

PROFESSIONAL ENGINEER
J. TRUDEAU
LICENCE
NT/NU

Rev.	Date	Par	Description
REV-A	2018-08-20	Julie Lajoie	Correction apporter tel que demander en date du 8 août 2018

Projet : Screen Platform (Iqaluit Wastewater)

No. Projet : MH.2018.0839_ST

Statut : Révisé	Commentaire :	
Détaillé par : Julie Lajoie	Trou : 13/16"Ø u/n	Client : Const. Gely
Vérifié par: Const. Gely	Soudure : E70XXELECT	No. Dessin :
	Acier : A500 GR.B	C3
	Peinture: Galvanisé	Sequence : REV-A
	Date : 2018-08-20	

STRUCTURES M.H. inc. ENTREPRENEUR GÉNÉRAL

Quantité	Description	Longueur	Finition
2	178x178x25	83	
2	178x178x25	83	

Marque	Quantité	Description	Longueur	Nuance	Finition	Poids	Poids total
C4	1	Poteau					
c1000	1	HSS 3 1/2X3 1/2X3/16	1004.0	A500 GR.B	Galvanisé	27.004	27.004
bp1000	1	PL1 1/2x180x180	180.0	G40.21		6.729	6.729
p1002	1	PL1 1/2x1108 1/2x12.9	2125.0	G40.21		5.433	5.433
p1004	1	PL1 1/2x180x200	200.0	G40.21		4.413	4.413
	4					43.579	43.579
	4						43.579

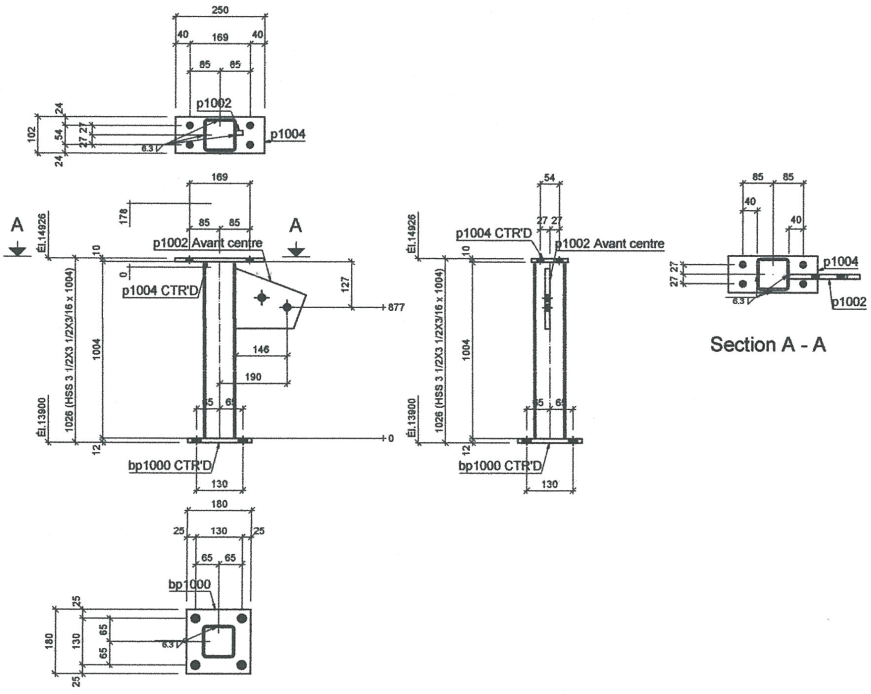

Section A - A

1 - C4 HSS 3 1/2X3 1/2X3/16

d=88.9 b=88.9 t=4.8 w=4.8 k=

Grid reference (A-B/1-2)

REGISTERED PROFESSIONAL ENGINEER
J. TRUDEAU
LICENSEE
NT/NU

Rev.	Date	Par	Description
REV-A	2018-08-20	Julie Lajoie	Correction apporter tel que demander en date du 8 août 2018

Projet : Screen Platform (Iqaluit Wastewater)

No. Projet : MH.2018.0839_ST

Statut : Révisé	Commentaire :	
Détaillé par : Julie Lajoie	Trou : 13/16"Ø u/n	Client : Const. Gely
Vérifié par: Const. Gely	Soudure : E70XXELECT	No. Dessin : C4
STRUCTURES M.H. inc. ENTREPRENEUR GÉNÉRAL	Acier : A500 GR.B	
	Peinture: Galvanisé	Sequence : REV-A
	Date : 2018-08-20	

Quantité	Description	Longueur	Finition
2	1/8 for A325	51	

Marque	Quantité	Description	Longueur	Nuance	Finition	Poids	Poids total
C5	1	Fabriqué					
c1000	1	HSS 3 1/2X3 1/2X3/16	1004.0	A500 GR.B	Galvanisé	27.004	27.004
bp1000	1	PLT12x150x150	150.0	G40.21		6.729	6.729
p1000	1	PLT12x1000x2x24.1	24.1	G40.21		5.049	5.049
p1004	1	PLT10x1000x250	250.0	G40.21		4.413	4.413
	4					43.195	43.195
	4						43.195

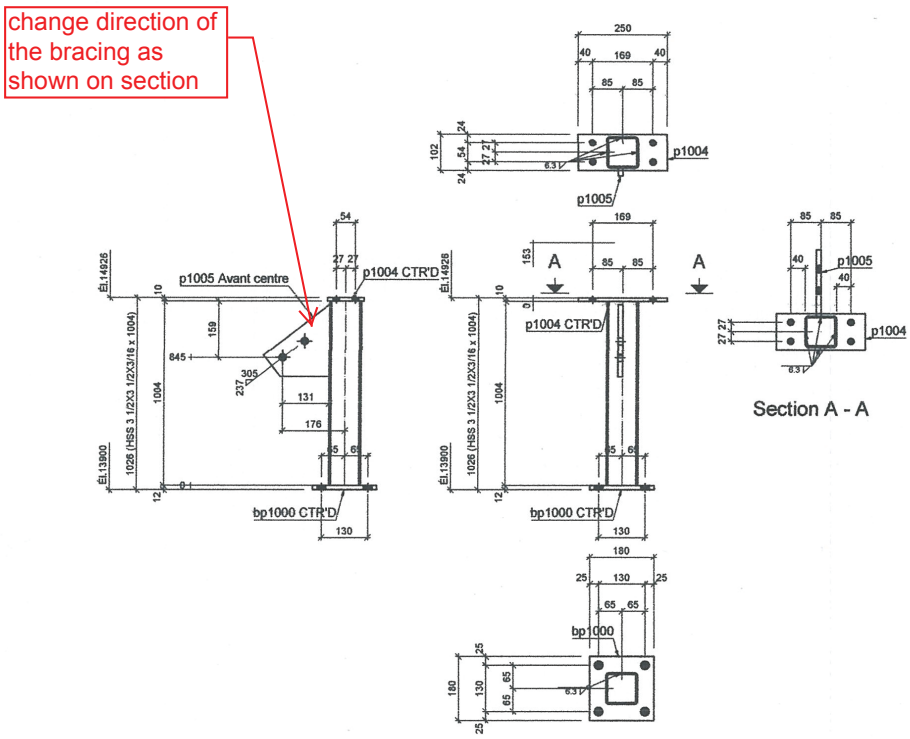

1 - C5 HSS 3 1/2X3 1/2X3/16

d=88.9 b=88.9 t=4.8 w=4.8 k=

Grid reference (A-B/1-2)

Quantité	Description	Longueur	Finition
3	116 kg A500	51	

Rev.	Date	Par	Description
REV-A	2018-08-20	Julie Lajoie	Correction apporter tel que demander en date du 8 août 2018

Projet : Screen Platform (Iqaluit Wastewater)

No. Projet : MH.2018.0839_ST

Statut : Révisé	Commentaire :	
Détaillé par : Julie Lajoie	Trou : 13/16"Ø u/n	Client : Const. Gely
Vérifié par: Const. Gely	Soudure : E70XXELECT	No. Dessin : C5
STRUCTURES M.H. inc. ENTREPRENEUR GÉNÉRAL	Acier : A500 GR.B	
	Peinture: Galvanisé	Sequence : REV-A
	Date : 2018-08-20	

REGISTERED PROFESSIONAL ENGINEER
J. THUDEAUI
LICENSEE
NT/NU

Marque	Quantité	Description	Longueur	Nuance	Finition	Poids	Poids total
C6	1	Poteau					
p1004	1	HSS 3 1/2X3 1/2X3/16	1004.0	A500 GR.B	Galvanisé	27.064	27.064
bp1000	1	PL172x100x12	180.0	G40.21		1.726	1.726
p1002	1	PL115.2x100.2x214.5	214.5	G40.21		1.549	1.549
p1005	1	PL119.2x180.2x231.7	231.7	G40.21		2.991	2.991
p1006	1	PL119x100x260	260.0	G40.21		4.419	4.419
	5					46.835	46.835
	5						46.835

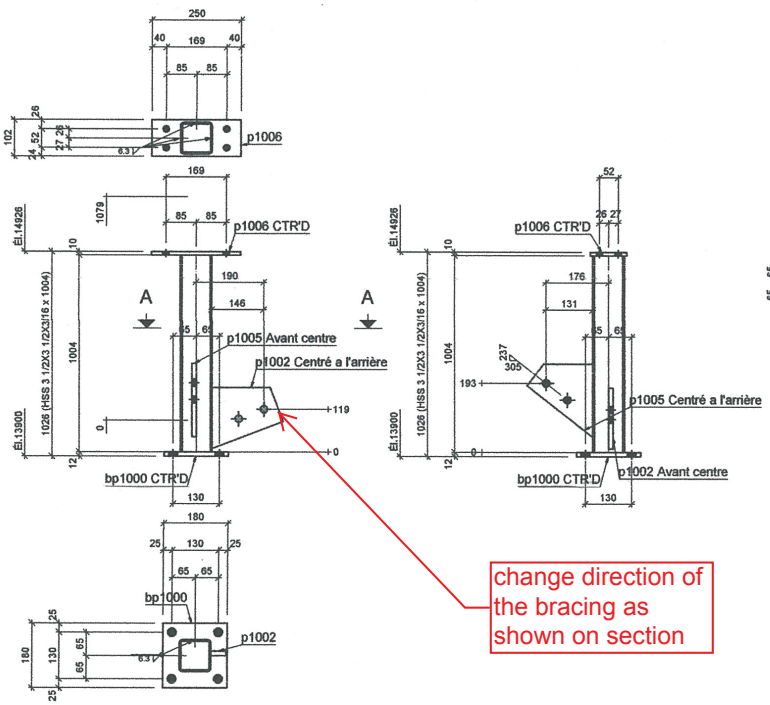

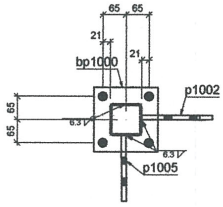

Section A - A

change direction of the bracing as shown on section

1 - C6 HSS 3 1/2X3 1/2X3/16

d=88.9 b=88.9 t=4.8 w=4.8 k=

Grid reference (A-B/1-2)

REGISTERED PROFESSIONAL ENGINEER
J. TRUDEAU
LICENSEE
NT/NU

Rev.	Date	Par	Description
REV-A	2018-08-20	Julie Lajoie	Correction apporter tel que demander en date du 8 août 2018

Projet : Screen Platform (Iqaluit Wastewater)

No. Projet : MH.2018.0839_ST

Statut : Révisé	Commentaire :	
Détaillé par : Julie Lajoie	Trou : 13/16"Ø u/h	Client : Const. Gely
Vérifié par: Const. Gely	Soudure : E70XXELECT	No. Dessin :
STRUCTURES M.H. Inc. ENTREPRENEUR GÉNÉRAL	Acier : A500 GR.B	C6
	Peinture: Galvanisé	Sequence : REV-A
	Date : 2018-08-20	

Quantité	Description	Longueur	Finition
4	HSS 3 1/2X3 1/2X3/16	81	

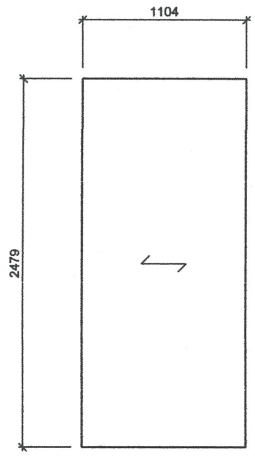

1 - p1009 McNichols GW (19W4) 1-1/2x3/16 - 1104x2479 - A-1001

REGISTERED PROFESSIONAL ENGINEER
TREMBLAY
LICENSEE
NT/NU

Rev.	Date	Par	Description
REV-A	2018-08-20	Julie Lajoie	Correction apporter tel que demander en date du 8 août 2018

Projet : Screen Platform (Iqaluit Wastewater)

No. Projet : MH.2018.0839_ST

Statut : Révisé	Commentaire :	
Détaillé par : Julie Lajoie	Trou : 13/16"Ø u/n	Client : Const. Gely
Vérifié par: Const. Gely	Soudure : E70XXELECT	No. Dessin : p1009
STRUCTURES M.H. inc. ENTREPRENEUR GÉNÉRAL	Acier : A-1001	
	Peinture: Galvanisé	Sequence : REV-A
	Date : 2018-08-20	

Marque	Quantité	Description	Longueur	Nuance	Finition	Poids	Poids total	Marque	Quantité	Dans l'assemblage

Marque	Quantité	Description	Longueur	Nuance	Finition	Poids	Poids total
P	1	Calibrate					
p1000	1	McNichols GW (19W4) 1-1/2x3/16 - 1104x2479-1001			Galvanisé	318.128	318.128
						318.128	318.128
	1						318.128

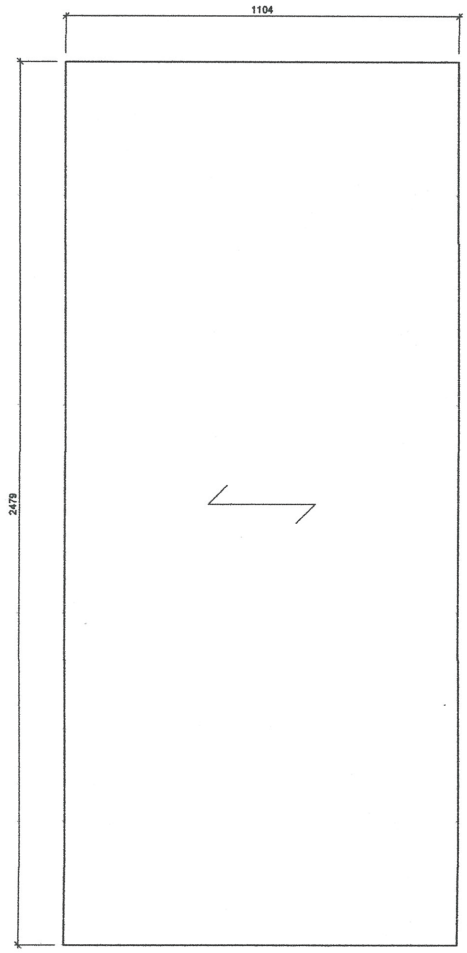

1 - P1 McNichols GW (19W4) 1-1/2x3/16 - 1104x2479

REGISTERED PROFESSIONAL ENGINEER
J. TRUDEAU
LICENSEE
NT/NU

Rev.	Date	Par	Description
REV-A	2018-08-20	Julie Lajoie	Correction apporter tel que demander en date du 8 août 2018

Projet : Screen Platform (Iqaluit Wastewater)

No. Projet : MH.2018.0839_ST

Statut : Révisé	Commentaire :	
Détaillé par : Julie Lajoie	Trou : 13/16"Ø u/n	Client : Const. Gely
Vérifié par: Const. Gely	Soudure : E70XXELECT	No. Dessin : P1
STRUCTURES M.H. inc. ENTREPRENEUR GÉNÉRAL	Acier : A-1001	
	Peinture: Galvanisé	Sequence : REV-A
	Date : 2018-08-20	

Quantité	Description	Longueur	Finition

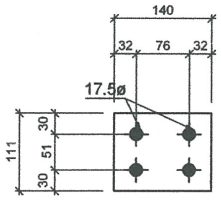

14 - p1000 PLT10x111x140 - G40.21

REGISTERED PROFESSIONAL ENGINEER
J. TREMBLAY
LICENSEE
NT/NU

Rev.	Date	Par	Description
REV-A	2018-08-20	Julie Lajoie	Correction apporter tel que demander en date du 8 août 2018

Projet : Screen Platform (Iqaluit Wastewater)

No. Projet : MH.2018.0839_ST

Statut : Révisé	Commentaire :	
Détaillé par : Julie Lajoie	Trou : 13/16"Ø u/n	Client : Const. Gely
Vérifié par: Const. Gely	Soudure : E70XXELECT	No. Dessin : p1000
STRUCTURES M.H. inc. ENTREPRENEUR GÉNÉRAL	Acier : G40.21	
	Peinture: Aucun	Sequence : REV-A
	Date : 2018-08-20	

Marque	Quantité	Description	Longueur	Nuance	Finition	Poids	Poids total
p1000	14	PLT10x111x140	140	G40.21		1.2	17.1
	14						17.1

Marque	Quantité	Dans l'assemblage
p1000	10	B1
p1000	2	B6
p1000	2	B7
	14	

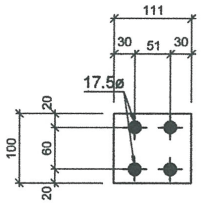

4 - p1001 PLT10x100x111 - G40.21

REGISTERED PROFESSIONAL ENGINEER
J. COUDEAU
LICENSEE
NT/NU

Rev.	Date	Par	Description
REV-A	2018-08-20	Julie Lajoie	Correction apporter tel que demander en date du 8 août 2018

Projet : Screen Platform (Iqaluit Wastewater)

No. Projet : MH.2018.0839_ST

Statut : Révisé	Commentaire :	
Détaillé par : Julie Lajoie	Trou : 13/16"Ø u/n	Client : Const. Gely
Vérifié par: Const. Gely	Soudure : E70XXELECT	No. Dessin : p1001
STRUCTURES M.H. inc. ENTREPRENEUR GÉNÉRAL	Acier : G40.21	
	Peinture: Aucun	Sequence : REV-A
	Date : 2018-08-20	

Marque	Quantité	Description	Longueur	Nuance	Finition	Poids	Poids total
p1001	4	PLT10x100x111	111	G40.21		0.9	3.5
	4						3.5

Marque	Quantité	Dans l'assemblage
p1001	2	B5
p1001	2	B6
	4	

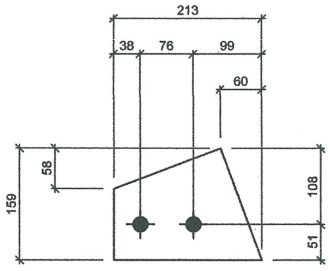

4 - p1002 PLT12.7x159.1x212.9 - G40.21

REGISTERED PROFESSIONAL ENGINEER
J. TROUEALL
LICENSEE
NT/NU

Rev.	Date	Par	Description
REV-A	2018-08-20	Julie Lajoie	Correction apporter tel que demander en date du 8 août 2018

Projet : Screen Platform (Iqaluit Wastewater)

No. Projet : MH.2018.0839_ST

Statut : Révisé	Commentaire :	
Détaillé par : Julie Lajoie	Trou : 13/16"Ø u/n	Client : Const. Gely
Vérifié par: Const. Gely	Soudure : E70XXELECT	No. Dessin : p1002
STRUCTURES M.H. inc. ENTREPRENEUR GÉNÉRAL	Acier : G40.21	
	Peinture: Aucun	Sequence : REV-A
	Date : 2018-08-20	

Marque	Quantité	Description	Longueur	Nuance	Finition	Poids	Poids total
p1002	4	PLT12.7x159.1x212.9	213	G40.21		2.5	9.9
	4						9.9

Marque	Quantité	Dans l'assemblage
p1002	1	C1
p1002	1	C2
p1002	1	C4
p1002	1	C5
4		

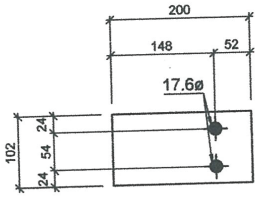

2 - p1003 PLT10x102x200 - G40.21

REGISTERED PROFESSIONAL ENGINEER
J-F TRUDEAU
LICENSEE
NT/NU

Rev.	Date	Par	Description
REV-A	2018-08-20	Julie Lajoie	Correction apporter tel que demander en date du 8 août 2018

Projet : Screen Platform (Iqaluit Wastewater)

No. Projet : MH.2018.0839_ST

Statut : Révisé	Commentaire :	
Détaillé par : Julie Lajoie	Trou : 13/16"Ø u/n	Client : Const. Gely
Vérifié par: Const. Gely	Soudure : E70XXELECT	No. Dessin : p1003
STRUCTURES M.H. inc. ENTREPRENEUR GÉNÉRAL	Acier : G40.21	
	Peinture: Aucun	Sequence : REV-A
	Date : 2018-08-20	

Marque	Quantité	Description	Longueur	Nuance	Finition	Poids	Poids total
p1003	2	PLT10x102x200	200	G40.21		1.6	3.2
	2						3.2

Marque	Quantité	Dans l'assemblage
p1003	1	C1
p1003	1	C3
	2	

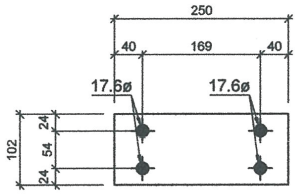

2 - p1004 PLT10x102x250 - G40.21

REGISTERED PROFESSIONAL ENGINEER
J. TRUDEAU
LICENSEE
NT/NU

Rev.	Date	Par	Description
REV-A	2018-08-20	Julie Lajoie	Correction apporter tel que demander en date du 8 août 2018

Projet : Screen Platform (Iqaluit Wastewater)

No. Projet : MH.2018.0839_ST

Statut : Révisé	Commentaire :	
Détaillé par : Julie Lajoie	Trou : 13/16"Ø u/n	Client : Const. Gely
Vérifié par: Const. Gely	Soudure : E70XXELECT	No. Dessin : p1004
STRUCTURES M.H. inc. ENTREPRENEUR GÉNÉRAL	Acier : G40.21	
	Peinture: Aucun	Sequence : REV-A
	Date : 2018-08-20	

Marque	Quantité	Description	Longueur	Nuance	Finition	Poids	Poids total
p1004	2	PLT10x102x250	250	G40.21		2.0	4.0
	2						4.0

Marque	Quantité	Dans l'assemblage
p1004	1	C4
p1004	1	C5
2		

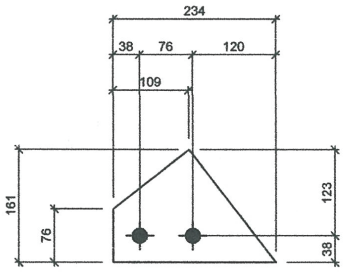

2 - p1005 PLT12.7x160.9x234.1 - G40.21

REGISTERED PROFESSIONAL ENGINEER
J. TRUDEAU
LICENSEE
NT/NU

Rev.	Date	Par	Description
REV-A	2018-08-20	Julie Lajoie	Correction apporter tel que demander en date du 8 août 2018

Projet : Screen Platform (Iqaluit Wastewater)

No. Projet : MH.2018.0839_ST

Statut : Révisé	Commentaire :	
Détaillé par : Julie Lajoie	Trou : 13/16"Ø u/n	Client : Const. Gely
Vérifié par: Const. Gely	Soudure : E70XXELECT	No. Dessin : p1005
STRUCTURES M.H. inc. ENTREPRENEUR GÉNÉRAL	Acier : G40.21	
	Peinture: Aucun	Sequence : REV-A
	Date : 2018-08-20	

Marque	Quantité	Description	Longueur	Nuance	Finition	Poids	Poids total
p1005	2	PLT12.7x160.9x234.1	234	G40.21		2.3	4.6
	2						4.6

Marque	Quantité	Dans l'assemblage
p1005	1	C5
p1005	1	C6
	2	

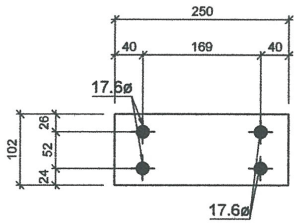

1 - p1006 PLT10x102x250 - G40.21

REGISTERED PROFESSIONAL ENGINEER
J. TRUDEAU
LICENSEE
NT/NU

Rev.	Date	Par	Description
REV-A	2018-08-20	Julie Lajoie	Correction apporter tel que demander en date du 8 août 2018

Projet : Screen Platform (Iqaluit Wastewater)

No. Projet : MH.2018.0839_ST

Statut : Révisé	Commentaire :	
Détaillé par : Julie Lajoie	Trou : 13/16"Ø u/n	Client : Const. Gely
Vérifié par: Const. Gely	Soudure : E70XXELECT	No. Dessin : p1006
STRUCTURES M.H. inc. ENTREPRENEUR GÉNÉRAL	Acier : G40.21	
	Peinture: Aucun	Sequence : REV-A
	Date : 2018-08-20	

Marque	Quantité	Description	Longueur	Nuance	Finition	Poids	Poids total
p1006	1	PLT10x102x250	250	G40.21		2.0	2.0
	1						2.0

Marque	Quantité	Dans l'assemblage
p1006	1	C6
	1	

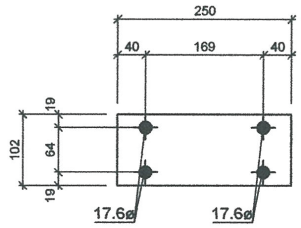

1 - p1007 PLT10x102x250 - G40.21

REGISTERED PROFESSIONAL ENGINEER
J. TRUDEAU
LICENSEE
NT/NU

Rev.	Date	Par	Description
REV-A	2018-08-20	Julie Lajoie	Correction apporter tel que demander en date du 8 août 2018

Projet : Screen Platform (Iqaluit Wastewater)

No. Projet : MH.2018.0839_ST

Statut : Révisé	Commentaire :	
Détaillé par : Julie Lajoie	Trou : 13/16"Ø u/n	Client : Const. Gely
Vérifié par: Const. Gely	Soudure : E70XXELECT	No. Dessin : p1007
STRUCTURES M.H. inc. ENTREPRENEUR GÉNÉRAL	Acier : G40.21	
	Peinture: Aucun	Sequence : REV-A
	Date : 2018-08-20	

Marque	Quantité	Description	Longueur	Nuance	Finition	Poids	Poids total
p1007	1	PLT10x102x250	250	G40.21		2.0	2.0
	1						2.0

Marque	Quantité	Dans l'assemblage
p1007	1	C2
	1	

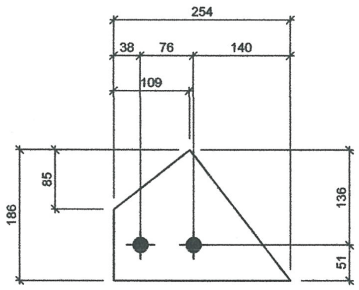

2 - p1008 PLT12.7x186.3x253.9 - G40.21

REGISTERED PROFESSIONAL ENGINEER
J. THIBEAU
LICENSEE
NT/NU

Rev.	Date	Par	Description
REV-A	2018-08-20	Julie Lajoie	Correction apporter tel que demander en date du 8 août 2018

Projet : Screen Platform (Iqaluit Wastewater)

No. Projet : MH.2018.0839_ST

Statut : Révisé	Commentaire :	
Détaillé par : Julie Lajoie	Trou : 13/16"Ø u/n	Client : Const. Gely
Vérifié par: Const. Gely	Soudure : E70XXELECT	No. Dessin : p1008
STRUCTURES M.H. inc. ENTREPRENEUR GÉNÉRAL	Acier : G40.21	
	Peinture: Aucun	Sequence : REV-A
	Date : 2018-08-20	

Marque	Quantité	Description	Longueur	Nuance	Finition	Poids	Poids total
p1008	2	PLT12.7x186.3x253.9	254	G40.21		2.9	5.8
	2						5.8

Marque	Quantité	Dans l'assemblage
p1008	1	C1
p1008	1	C2
	2	

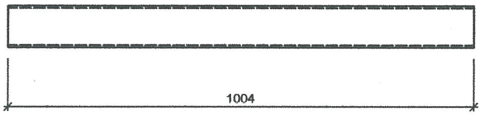

6 - c1000 HSS 3 1/2X3 1/2X3/16 - A500 GR.B

REGISTERED PROFESSIONAL ENGINEER
J.C. TRUDEAU
LICENSEE
NT/NU

Rev.	Date	Par	Description
REV-A	2018-08-20	Julie Lajoie	Correction apporter tel que demander en date du 8 août 2018

Projet : Screen Platform (Iqaluit Wastewater)

No. Projet : MH.2018.0839_ST

Statut : Révisé	Commentaire :	
Détaillé par : Julie Lajoie	Trou : 13/16"Ø u/n	Client : Const. Gely
Vérifié par: Const. Gely	Soudure : E70XXELECT	No. Dessin : c1000
STRUCTURES M.H. inc. ENTREPRENEUR GÉNÉRAL	Acier : A500 GR.B	
	Peinture: Galvanisé	Sequence : REV-A
	Date : 2018-08-20	

Marque	Quantité	Description	Longueur	Nuance	Finition	Poids	Poids total
c1000	6	HSS 3 1/2X3 1/2X3/16	1004	A500 GR.B	Galvanisé	12.2	73.5
	6						73.5

Marque	Quantité	Dans l'assemblage
c1000	1	C1
c1000	1	C2
c1000	1	C3
c1000	1	C4
c1000	1	C5
c1000	1	C6
	6	

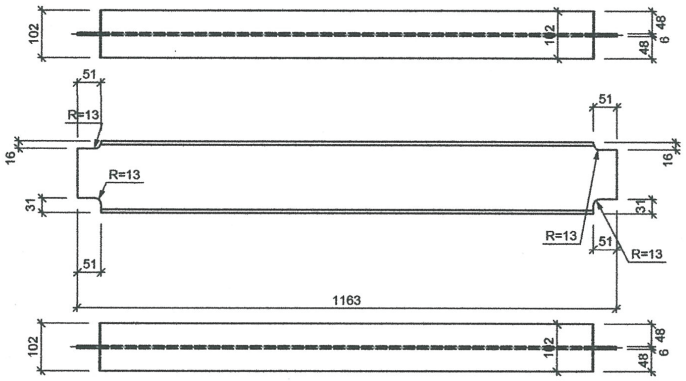

1 - b1009 W150x18 - 350W

REGISTERED PROFESSIONAL ENGINEER
J. TRUDEAU
LICENSEE
NT/NU

Rev.	Date	Par	Description
REV-A	2018-08-20	Julie Lajoie	Correction apporter tel que demander en date du 8 août 2018

Projet : Screen Platform (Iqaluit Wastewater)

No. Projet : MH.2018.0839_ST

Statut : Révisé	Commentaire :	
Détaillé par : Julie Lajoie	Trou : 13/16"Ø u/n	Client : Const. Gely
Vérifié par: Const. Gely	Soudure : E70XXELECT	No. Dessin : b1009
STRUCTURES M.H. inc. ENTREPRENEUR GÉNÉRAL	Acier : 350W	
	Peinture: Galvanisé	Sequence : REV-A
	Date : 2018-08-20	

Marque	Quantité	Description	Longueur	Nuance	Finition	Poids	Poids total
b1009	1	W150x18	1163	350W	Galvanisé	20.9	20.9
	1						20.9

Marque	Quantité	Dans l'assemblage
b1009	1	B7
	1	

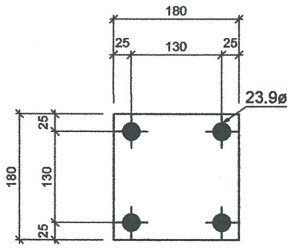

6 - bp1000 PLT12x180x180 - G40.21

REGISTERED PROFESSIONAL ENGINEER
J. GUDEAU
LICENSEE
NT/NU

Rev.	Date	Par	Description
REV-A	2018-08-20	Julie Lajoie	Correction apporter tel que demander en date du 8 août 2018

Projet : Screen Platform (Iqaluit Wastewater)

No. Projet : MH.2018.0839_ST

Statut : Révisé	Commentaire :	
Détaillé par : Julie Lajoie	Trou : 13/16"Ø u/n	Client : Const. Gely
Vérifié par: Const. Gely	Soudure : E70XXELECT	No. Dessin : bp1000
STRUCTURES M.H. inc. ENTREPRENEUR GÉNÉRAL	Acier : G40.21	
	Peinture: Aucun	Sequence : REV-A
	Date : 2018-08-20	

Marque	Quantité	Description	Longueur	Nuance	Finition	Poids	Poids total
bp1000	6	PLT12x180x180	180	G40.21		3.1	18.3
	6						18.3

Marque	Quantité	Dans l'assemblage
bp1000	1	G1
bp1000	1	G2
bp1000	1	G3
bp1000	1	G4
bp1000	1	G5
bp1000	1	G6
6		

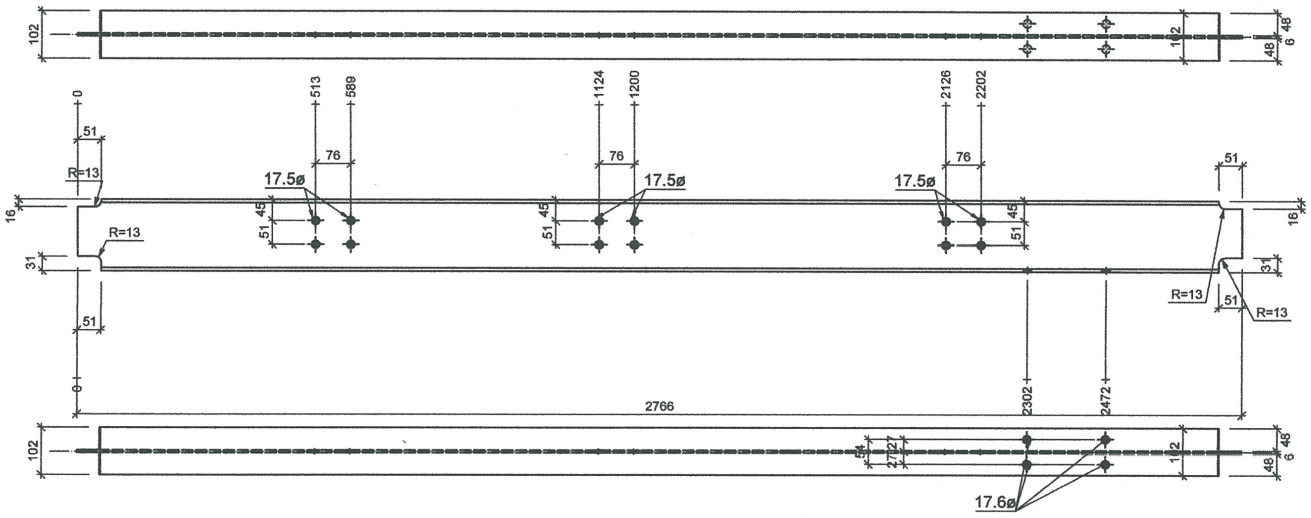

1 - b1006 W150x18 - 350W

Rev.	Date	Par	Description
REV-A	2018-08-20	Julie Lajoie	Correction apporter tel que demander en date du 8 août 2018

REGISTERED PROFESSIONAL ENGINEER
J. LAJOIE
LICENSEE
NT/NU

Projet : Screen Platform (Iqaluit Wastewater)
No. Projet : MH.2018.0839_ST

Statut : Révisé	Commentaire :	
Détaillé par : Julie Lajoie	Trou : 13/16"Ø u/n	Client : Const. Gely
Vérifié par: Const. Gely	Soudure : E70XXELECT	No. Dessin : b1006
STRUCTURES M.H. inc. ENTREPRENEUR GÉNÉRAL	Acier : 350W	
	Peinture: Galvanisé	Sequence : REV-A
	Date : 2018-08-20	

Marque	Quantité	Description	Longueur	Nuance	Finition	Poids	Poids total
b1006	1	W150x18	2766	350W	Galvanisé	49.8	49.8
	1						49.8

Marque	Quantité	Dans l'assemblage
b1006	1	B6
	1	

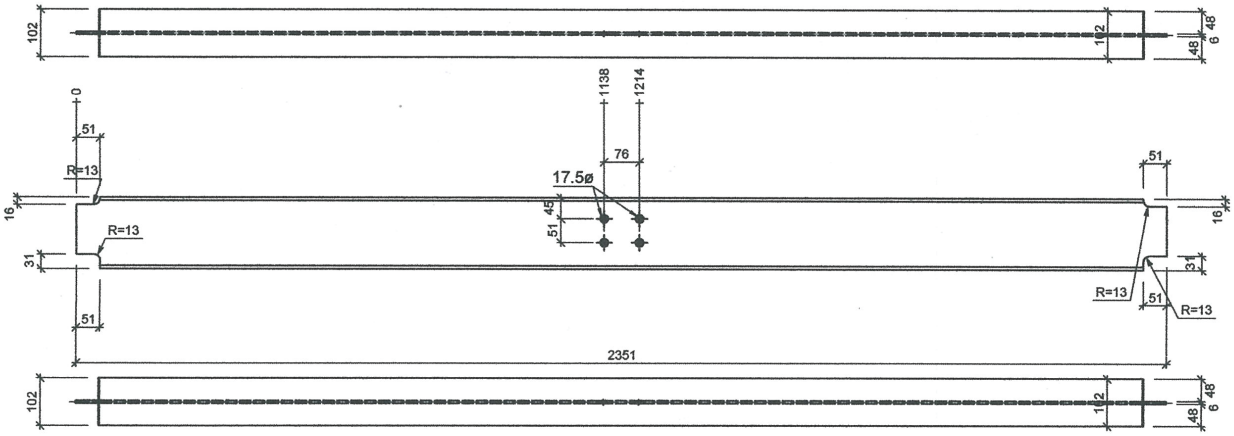

1 - b1008 W150x18 - 350W

Rev.	Date	Par	Description
REV-A	2018-08-20	Julie Lajoie	Correction apporter tel que demander en date du 8 août 2018

REGISTERED PROFESSIONAL ENGINEER
LICENSEE
NT/NU

Projet : Screen Platform (Iqaluit Wastewater)

No. Projet : MH.2018.0839_ST

Statut : Révisé	Commentaire :	
Détaillé par : Julie Lajoie	Trou : 13/16"Ø u/n	Client : Const. Gely
Vérifié par: Const. Gely	Soudure : E70XXELECT	No. Dessin : b1008
STRUCTURES M.H. inc. ENTREPRENEUR GÉNÉRAL	Acier : 350W	
	Peinture: Galvanisé	Sequence : REV-A
	Date : 2018-08-20	

Marque	Quantité	Description	Longueur	Nuance	Finition	Poids	Poids total
b1008	1	W150x18	2351	350W	Galvanisé	42.3	42.3
	1						42.3

Marque	Quantité	Dans l'assemblage
b1008	1	B8
	1	

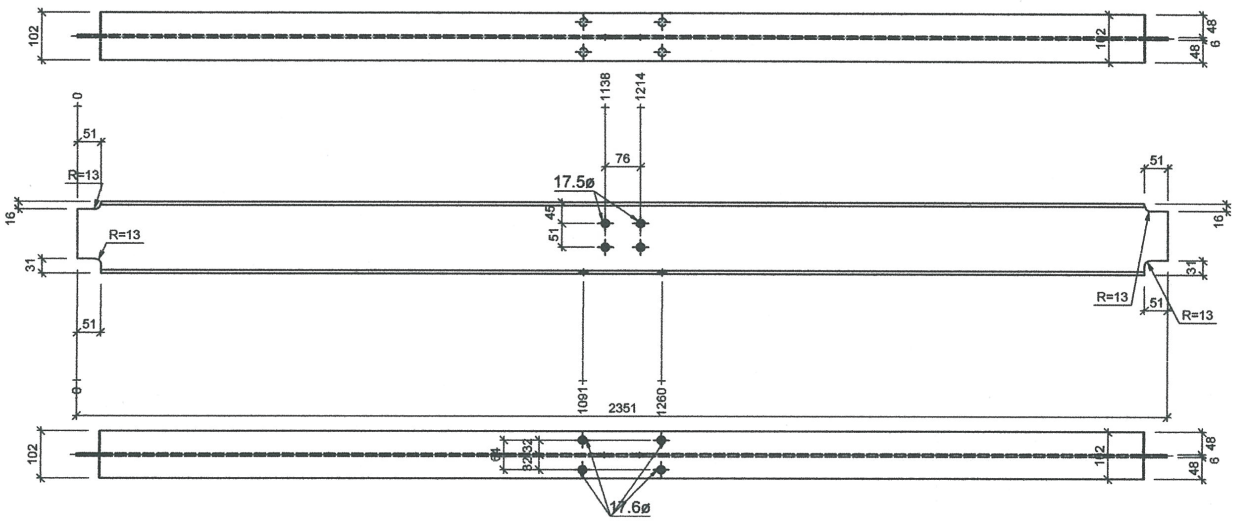

1 - b1007 W150x18 - 350W

Rev.	Date	Par	Description
REV-A	2018-08-20	Julie Lajoie	Correction apporter tel que demander en date du 8 août 2018

REGISTERED PROFESSIONAL ENGINEER
J. TRUDEAU
LICENSE
NT/NU

Projet : Screen Platform (Iqaluit Wastewater)

No. Projet : MH.2018.0839_ST

Statut : Révisé	Commentaire :	
Détaillé par : Julie Lajoie	Trou : 13/16"Ø u/n	Client : Const. Gely
Vérifié par: Const. Gely	Soudure : E70XXELECT	No. Dessin : b1007
STRUCTURES M.H. inc. ENTREPRENEUR GÉNÉRAL	Acier : 350W	
	Peinture: Galvanisé	Sequence : REV-A
	Date : 2018-08-20	

Marque	Quantité	Description	Longueur	Nuance	Finition	Poids	Poids total
b1007	1	W150x18	2351	350W	Galvanisé	42.3	42.3
	1						42.3

Marque	Quantité	Dans l'assemblage
b1007	1	B5
	1	

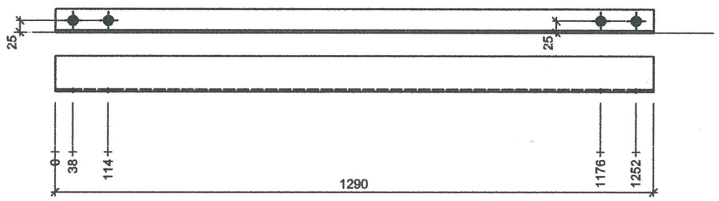

1 - b1003 L76X51X4.8 - 300W

REGISTERED PROFESSIONAL ENGINEER
K TRUDEAU
LICENSEE
NT/NU

Rev.	Date	Par	Description
REV-A	2018-08-20	Julie Lajoie	Correction apporter tel que demander en date du 8 août 2018

Projet : Screen Platform (Iqaluit Wastewater)

No. Projet : MH.2018.0839_ST

Statut : Révisé	Commentaire :	
Détaillé par : Julie Lajoie	Trou : 13/16"Ø u/n	Client : Const. Gely
Vérifié par: Const. Gely	Soudure : E70XXELECT	No. Dessin : b1003
STRUCTURES M.H. inc. ENTREPRENEUR GÉNÉRAL	Acier : 300W	
	Peinture: Galvanisé	Sequence : REV-A
	Date : 2018-08-20	

Marque	Quantité	Description	Longueur	Nuance	Finition	Poids	Poids total
b1003	1	L76X51X4.8	1290	300W	Galvanisé	5.8	5.8
	1						5.8

Marque	Quantité	Dans l'assemblage
b1003	1	B4
	1	

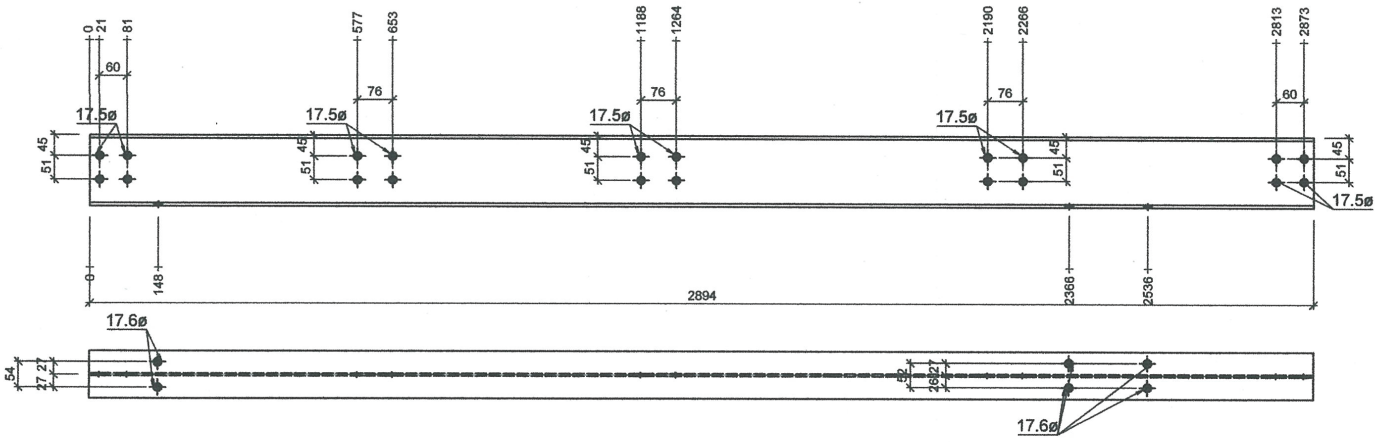

1 - b1005 W150x18 - 350W

Rev.	Date	Par	Description
REV-A	2018-08-20	Julie Lajoie	Correction apporter tel que demander en date du 8 août 2018

Projet : Screen Platform (Iqaluit Wastewater)

No. Projet : MH.2018.0839_ST

Statut : Révisé	Commentaire :	
Détaillé par : Julie Lajoie	Trou : 13/16"Ø u/n	Client : Const. Gely
Vérifié par: Const. Gely	Soudure : E70XXELECT	No. Dessin : b1005
STRUCTURES M.H. inc. ENTREPRENEUR GÉNÉRAL	Acier : 350W	
	Peinture: Galvanisé	Sequence : REV-A
	Date : 2018-08-20	

REGISTERED PROFESSIONAL ENGINEER J. TRUDEAU LICENSEE NT/NU

Marque	Quantité	Description	Longueur	Nuance	Finition	Poids	Poids total
b1005	1	W150x18	2894	350W	Galvanisé	52.1	52.1
	1						52.1

Marque	Quantité	Dans l'assemblage
b1005	1	B10
	1	

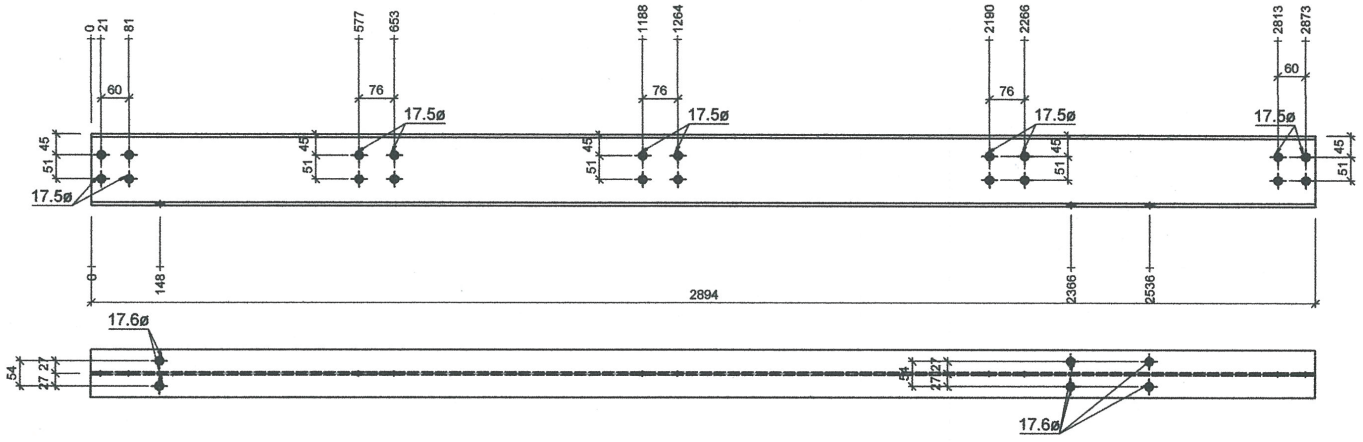

1 - b1004 W150x18 - 350W

REGISTERED PROFESSIONAL ENGINEER
J. GOUDREAU
LICENSEE
NT/NU

Rev.	Date	Par	Description
REV-A	2018-08-20	Julie Lajoie	Correction apporter tel que demander en date du 8 août 2018

Projet : Screen Platform (Iqaluit Wastewater)

No. Projet : MH.2018.0839_ST

Statut : Révisé	Commentaire :	
Détaillé par : Julie Lajoie	Trou : 13/16"Ø u/n	Client : Const. Gely
Vérifié par: Const. Gely	Soudure : E70XXELECT	No. Dessin : b1004
STRUCTURES M.H. inc. ENTREPRENEUR GÉNÉRAL	Acier : 350W	
	Peinture: Galvanisé	Sequence : REV-A
	Date : 2018-08-20	

Marque	Quantité	Description	Longueur	Nuance	Finition	Poids	Poids total
b1004	1	W150x18	2894	350W	Galvanisé	52.1	52.1
	1						52.1

Marque	Quantité	Dans l'assemblage
b1004	1	B9
	1	

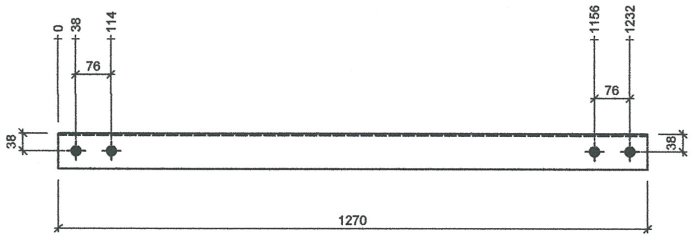

1 - b1002 L76X51X4.8 - 300W

REGISTERED PROFESSIONAL ENGINEER
J. TRUDEAU
LICENSEE
NT/NU

Rev.	Date	Par	Description
REV-A	2018-08-20	Julie Lajoie	Correction apporter tel que demander en date du 8 août 2018

Projet : Screen Platform (Iqaluit Wastewater)

No. Projet : MH.2018.0839_ST

Statut : Révisé	Commentaire :	
Détaillé par : Julie Lajoie	Trou : 13/16"Ø u/n	Client : Const. Gely
Vérifié par: Const. Gely	Soudure : E70XXELECT	No. Dessin : b1002
STRUCTURES M.H. inc. ENTREPRENEUR GÉNÉRAL	Acier : 300W	
	Peinture: Galvanisé	Sequence : REV-A
	Date : 2018-08-20	

Marque	Quantité	Description	Longueur	Nuance	Finition	Poids	Poids total
b1002	1	L76X51X4.8	1270	300W	Galvanisé	5.7	5.7
	1						5.7

Marque	Quantité	Dans l'assemblage
b1002	1	B3
	1	

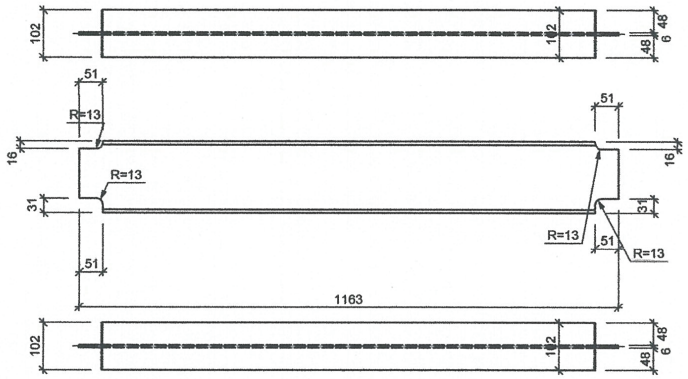

5 - b1000 W150x18 - 350W

REGISTERED PROFESSIONAL ENGINEER
J. TRUDEAU
INGÉNIEUR
NT/NU

Rev.	Date	Par	Description
REV-A	2018-08-20	Julie Lajoie	Correction apporter tel que demander en date du 8 août 2018

Projet : Screen Platform (Iqaluit Wastewater)

No. Projet : MH.2018.0839_ST

Statut : Révisé	Commentaire :	
Détaillé par : Julie Lajoie	Trou : 13/16"Ø u/n	Client : Const. Gely
Vérifié par: Const. Gely	Soudure : E70XXELECT	No. Dessin : b1000
STRUCTURES M.H. inc. ENTREPRENEUR GÉNÉRAL	Acier : 350W	
	Peinture: Galvanisé	Sequence : REV-A
	Date : 2018-08-20	

Marque	Quantité	Description	Longueur	Nuance	Finition	Poids	Poids total
b1000	5	W150x18	1163	350W	Galvanisé	20.9	104.6
	5						104.6

Marque	Quantité	Dans l'assemblage
b1000	5	B1
	5	

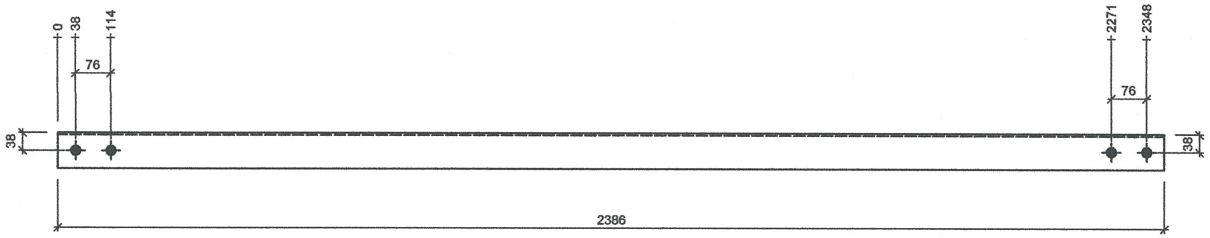

2 - b1001 L76X51X4.8 - 300W

REGISTERED PROFESSIONAL ENGINEER
LICENSEE
NT/NU

Rev.	Date	Par	Description
REV-A	2018-08-20	Julie Lajoie	Correction apporter tel que demander en date du 8 août 2018

Projet : Screen Platform (Iqaluit Wastewater)

No. Projet : MH.2018.0839_ST

Statut : Révisé	Commentaire :	
Détaillé par : Julie Lajoie	Trou : 13/16"Ø u/n	Client : Const. Gely
Vérifié par: Const. Gely	Soudure : E70XXELECT	No. Dessin : b1001
STRUCTURES M.H. inc. ENTREPRENEUR GÉNÉRAL	Acier : 300W	
	Peinture: Galvanisé	Sequence : REV-A
	Date : 2018-08-20	

Marque	Quantité	Description	Longueur	Nuance	Finition	Poids	Poids total
b1001	2	L76X51X4.8	2386	300W	Galvanisé	10.7	21.5
	2						21.5

Marque	Quantité	Dans l'assemblage
b1001	2	B2
	2	

SUBMITTALS IDENTIFICATION SHEET

PROJECT: Wastewater Treatment Plant Upgrade
Iqaluit, Nunavut

NUNAMI
STANTEC LIMITED
1088C Noble House
Iqaluit NU
www.stantec.com

CONTRACTOR: Kudlik Construction Ltd, Project 2018-062

Telephone: 867-979-1166

E-mail: srousseau@kudlik.biz

SUBCONTRACTOR: Structure MH

Person responsible: Moise Harvey

Telephone: (418)487-8772 E-mail: structures.mh@gmail.com

PRODUCT SUBMITTED:

☑ As Specified

☐ Alternate

SUPPLIER or MANUFACTURER:

Person responsible:

Telephone: E-mail:

DESCRIPTION OF SUBMITTAL: mezzanine

# of pages:

Reference to drawings:

Reference to specs:

Division: 05 Section: 05 12 23 - 05 21 00

REMARKS:

REVIEW AND COMMENTS (for use by Consultants):

STANTEC PROJECT #: 110426045 SUBMITTAL # Mech. room steel platform

This review by Stantec is for general conformance with the design concept of Stantec's design of the:
☐ Architectural ☑ Structural ☐ Mechanical ☐ Electrical ☐ Other

component(s) only and does not mean that Stantec has verified or approves the shop drawing(s). The Contractor remains solely responsible for the shop drawing(s) and this review by Stantec does not relieve the Contractor of the Contractor's responsibility for errors or omissions in the shop drawing(s) or for meeting all requirements of the contract documents. This review does not mean that Stantec approves the detailed design inherent in the shop drawing, responsibility for which shall remain with the Contractor submitting same, nor does this review mean that Stantec accepts any deviation of the shop drawing(s) from the contract documents. The Contractor is responsible for confirming all dimensions and correlating them at the job site, for all construction means, methods and techniques, and for coordination of construction work of all trades, including coordination of all shop drawings.

Stantec

☐ REVIEWED
☑ REVIEWED, AS NOTED
☐ REVISE AND RESUBMIT
☐ NOT REVIEWED

DATE 2018-08-29

BY Petr Polivka

all members shall be galvanized

The stamp above pertains to all 29 sheets in this document.

STANTEC PROJECT #: 110126045 SUBMITTAL # STC-009R1

This review by Stantec is for general conformance with the design concept of Stantec's design of the:
☐ Process ☐ Structural ☑ Mechanical ☐ Electrical ☐ Other

component(s) only and does not mean that Stantec has verified or approves the shop drawing(s). The Contractor remains solely responsible for the shop drawing(s) and this review by Stantec does not relieve the Contractor of the Contractor's responsibility for errors or omissions in the shop drawing(s) or for meeting all requirements of the contract documents. This review does not mean that Stantec approves the detailed design inherent in the shop drawing, responsibility for which shall remain with the Contractor submitting same, nor does this review mean that Stantec accepts any deviation of the shop drawing(s) from the contract documents. The Contractor is responsible for confirming all dimensions and correlating them at the job site, for all construction means, methods and techniques, and for coordination of construction work of all trades, including coordination of all shop drawings.

Stantec

☑ REVIEWED
☐ REVIEWED, AS NOTED
☐ REVISE AND RESUBMIT
☐ NOT REVIEWED

DATE August 30, 2018

BY Brendan Zrum

Review of this submission is for compliance with general intent of the contract. This review does not relieve the Sub-Contractor, Supplier or Manufacturer of responsibility for error or omissions in the submission or the responsibility of meeting all requirements of the contract documents. Any deviation from the contract documents initiated by the Sub-Contractor, Supplier or Manufacturer shall be at their sole risk. QUANTITIES AND DETAIL DIMENSIONS ARE THE SUB-CONTRACTORS OR SUPPLIERS RESPONSIBILITY. VERIFY DATA WITH FIELD DIMENSIONS.

SUBMITTAL TRACKING No.: **STC-009 rev 1** 2018-08-28

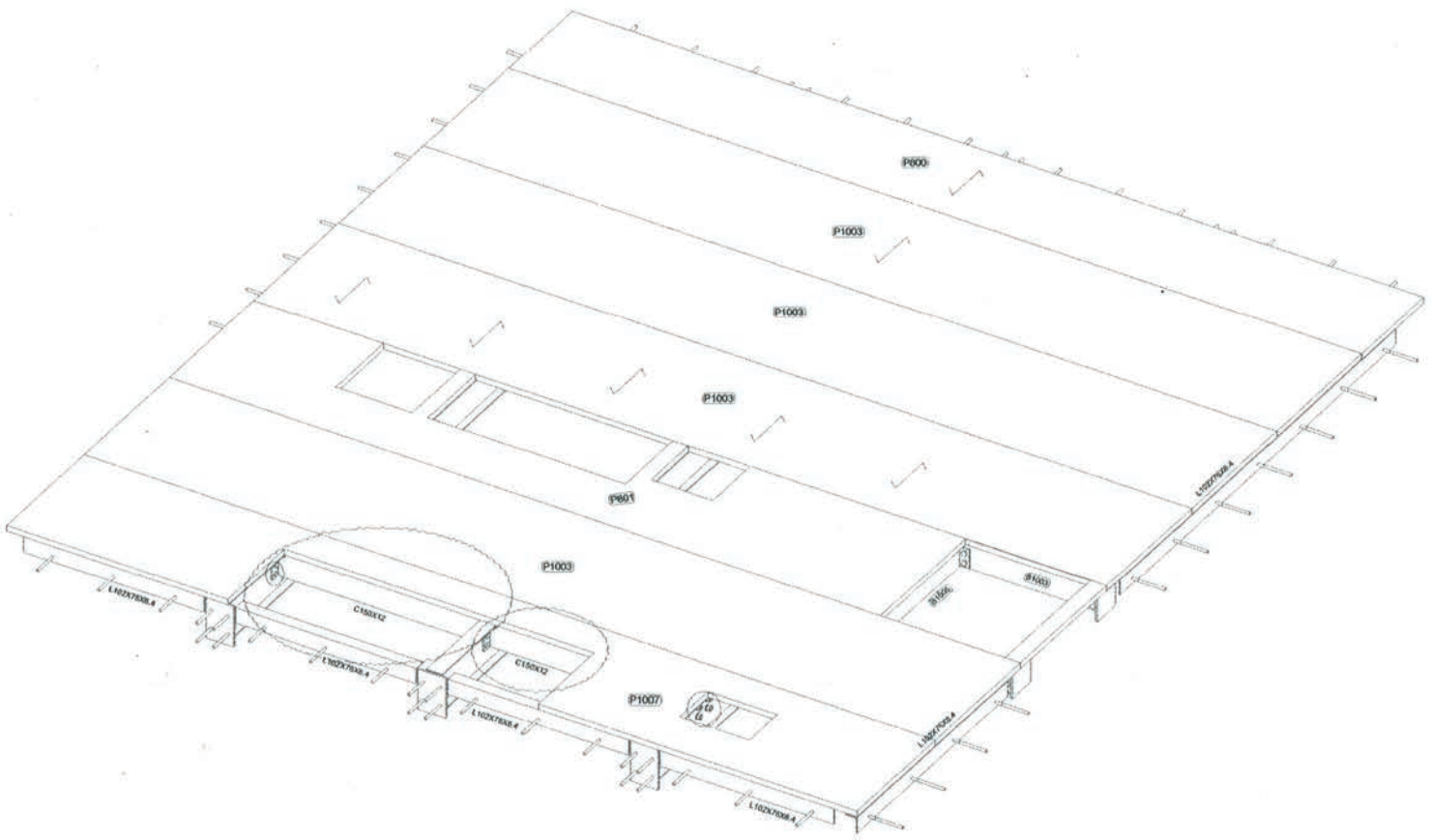

NEW FLOOR 4,5 et B, D
VIEW 3D

PROJET :

Iqaluit Waste
Water Treatment

TYPIQUE :
-GRAITING : (19W4) 1PO½ X $\frac{3}{16}$

-ALL BOLT ¾ GALVANIZED

-ANCRAGE M16 HILTI HAS STAINLESS STEEL

-USE THE HILTI HIT HY-200 FOR ANCRAGE

REGISTERED PROFESSIONAL ENGINEER
J. TRUDEAU
LICENSEE
NT/NU

Rev.	Date	Par	Description
REV-A	2018-08-24	Julie Lajoie	Review of chimney passages in the grating.

STRUCTURES M.H. inc.
ENTREPRENEUR GÉNÉRAL
1670 Av. de la Technologie, Alma, GIX 1E9
Téléphone : 418 480-2106 Télécopieur : 418 668-9235
structures.mh@gmail.com
RBQ : 5612-0215-01

Date : 2018-08-07

INGÉNIEUR : JEAN TRUDEAU

Client : KUDLIK CONST.

Projet :

No. Projet : MH.2018.0840_ST

Détaillé par : MOISE HARVEY

TITRE : Plans new floor

Boudure : ENAMELECT
Tissu : 1/4 x 3/8 mm
Acier :
Peinture :

No. Dessin : ST-00

Sequence : REV-B

Knife plate to head plate shall be welded as shown on construction documents, typ. for all similar connections

Add angle as per construction document

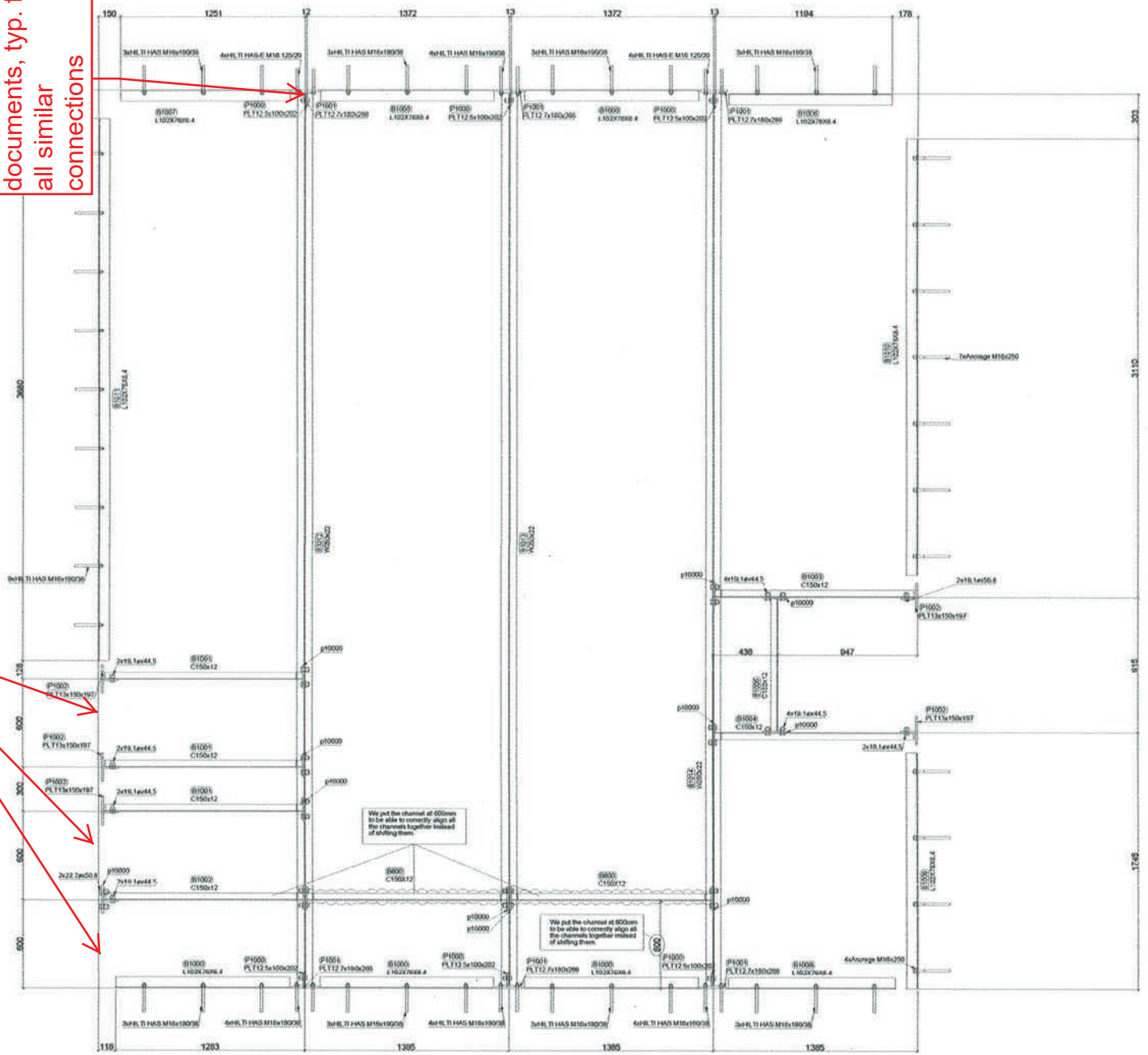

DETAIL NEW FLOOR 4,5 et B, D

PROJET :

Iqaluit Waste Water Treatment

TYPIQUE :

-GRAITING : (19W4) 1PO½ X 3/16

-ALL BOLT ¾ GALVANIZED

-ANCRAGE M16 HILTI HAS STAINLESS STEEL

-USE THE HILTI HIT HY-200 FOR ANCRAGE

REGISTERED PROFESSIONAL ENGINEER
J. TRUDEAU
LICENSEE
NT/NU

Rev.	Date	Par	Description
REV-B	2018-08-27	Julie Lajoie	Réajustement d'ouverture.

STRUCTURES M.H. inc.
ENTREPRENEUR GÉNÉRAL

Date : 2018-08-07

INGÉNIEUR : JEAN TRUDEAU

Client : KUDLIK CONST.

Projet : Iqaluit Waste Water Treatment

No. Projet : MH.2018.0840_ST

Détaillé par : MOISE HARVEY

TITRE : Detail view floor

No. Dessin : ST-01

REV-B

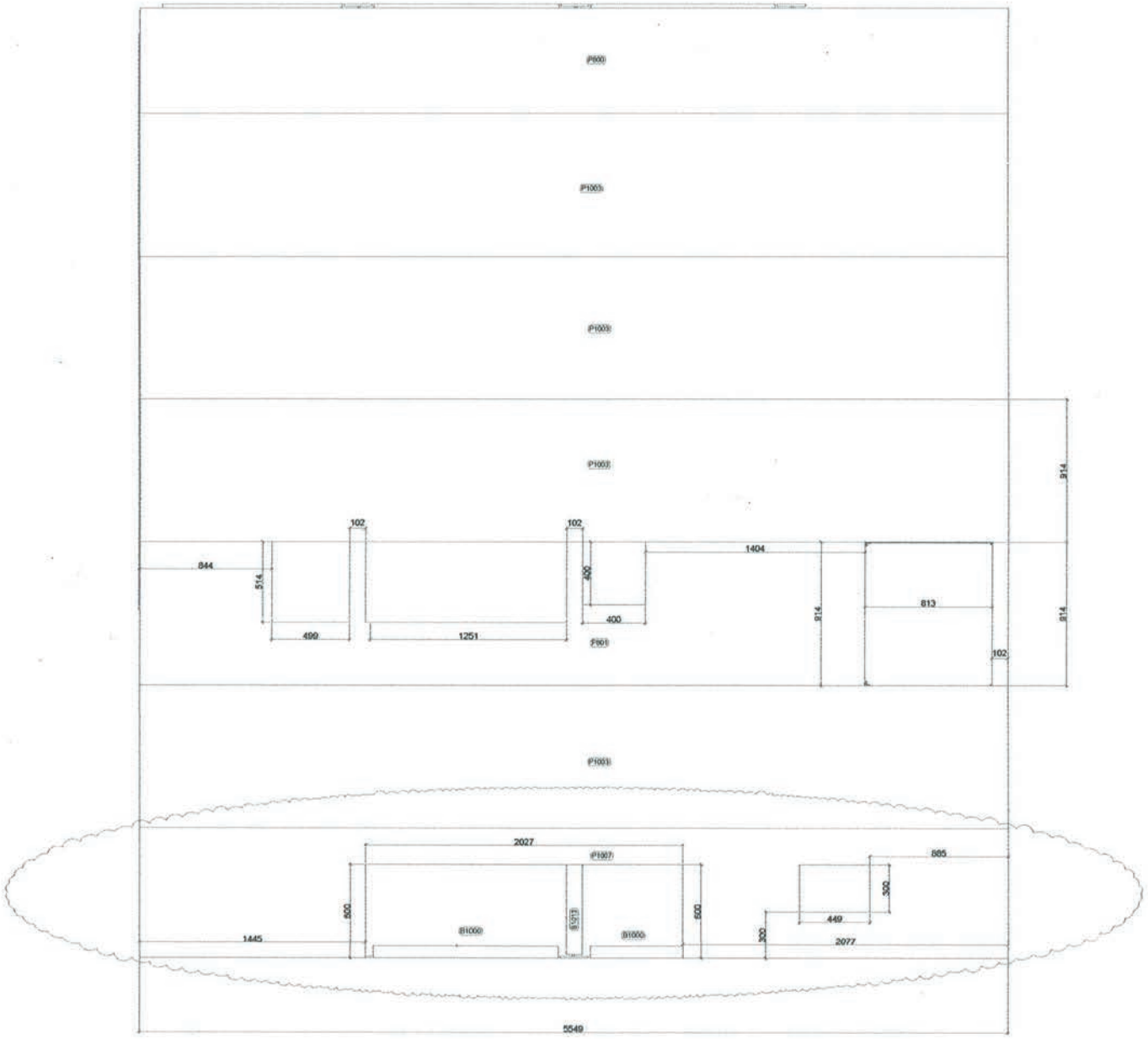

3D view
Review of chimney passages in the grating
The holes in the grating and dimensions will have to be checked before construction by the generals in mechanics.

PROJET :

Iqaluit Waste Water Treatment

TYPIQUE :
-GRAITING : (19W4) 1PO½ X $\frac{3}{16}$

-ALL BOLT ¾ GALVANIZED

-ANCRAGE M16 HILTI HAS STAINLESS STEEL

-USE THE HILTI HIT HY-200 FOR ANCRAGE

REGISTERED PROFESSIONAL ENGINEER
J. TRUDEAU
LICENSEE
NT/NU

Review of chimney passages in the grating
The holes in the grating and dimensions will have to be checked before construction by the generals in mechanics.

Rev.	Date	Par	Description
REV-B	2018-08-27	Julie Lajoie	Réajustement d'ouverture.

STRUCTURES M.H. inc.
ENTREPRENEUR GÉNÉRAL
[illegible]

Date : 2018-08-24

INGÉNIEUR : JEAN TRUDEAU

Client : KUDLIK CONST.

Projet : Plans new floor

No. Projet : MH.2018.0840_ST

Détaillé par : MOISE HARVEY

TITRE : Detail view floor graiting

No. Dessin : ST-03

Séquence : REV-B

Marque	Quantité	Description	Longueur	Nuance	Finition	Poids	Poids total
P1005	2						
p10005	2	PLT10x100x140	140.0	G40.21	Galvanisé	2.423	4.846
	2					2.423	4.846
	2						4.846

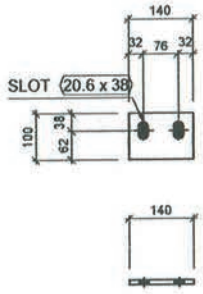

2 - P1005 PLT10x100x140

REGISTERED PROFESSIONAL ENGINEER
J. TRUDEAU
LICENSEE
NT/NU

Rev.	Date	Par	Description
REV-A	2018-08-24	Julie Lajoie	Review of chimney passages in the grating.

Projet : Plans new floor
No. Projet : MH.2018.0840_ST

Statut : Approuvé	Commentaire :	
Détaillé par : MOISE HARVEY	Trou : 13/16"Ø u/n	Client: UDLIK CONST.
Vérifié par: JEAN TRUDEAU	Soudure : E70XXELECT	No. Dessin : P1005
STRUCTURES M.H. inc. ENTREPRENEUR GÉNÉRAL	Acier : G40.21	
	Peinture: Aucun	Sequence : REV-A
	Date : 2018-08-07	

Marque	Quantité	Description	Longueur	Nuance	Finition	Poids	Poids total
P1008	1						
p10006	1	PLT10x100x140	140.0	G40.21	Galvanisé	2.423	2.423
	1					2.423	2.423
	1						2.423

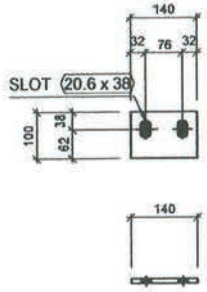

1 - P1008 PLT10x100x140

REGISTERED PROFESSIONAL ENGINEER
J. TRUDEAU
LICENSEE
NT/NU

Rev.	Date	Par	Description
REV-A	2018-08-24	Julie Lajoie	Review of chimney passages in the grating.

Projet : Plans new floor
No. Projet : MH.2018.0840_ST

Statut : Approuvé	Commentaire :	
Détaillé par : MOISE HARVEY	Trou : 13/16"Ø u/n	Client: UDLIK CONST.
Vérifié par: JEAN TRUDEAU	Soudure : E70XXELECT	No. Dessin : P1008
STRUCTURES M.H. inc. ENTREPRENEUR GÉNÉRAL	Acier : G40.21	
	Peinture: Aucun	Sequence : REV-A
	Date : 2018-08-07	

Marque	Quantité	Description	Longueur	Nuance	Finition	Poids	Poids total
P1007	1	Caillebotis					
p10009	1	McNichols GW (19W4) 1-1/2x3/16 - 834x5548.9		A-1001	Galvanisé	537.934	537.934
	1					537.934	537.934
	1						537.934

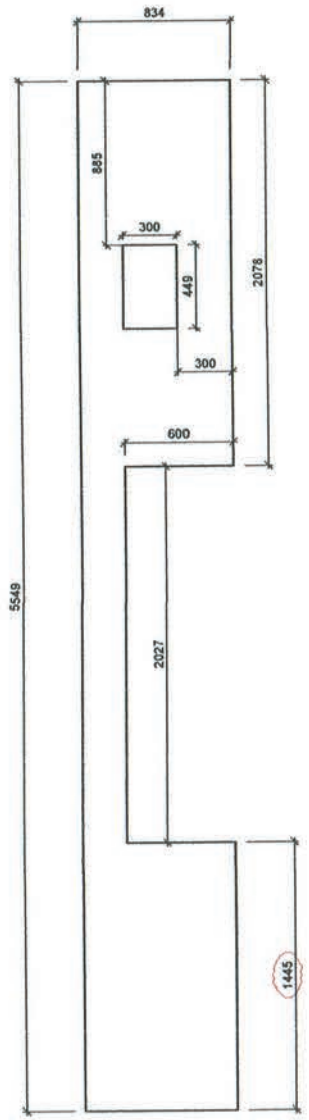

1 - P1007 McNichols GW (19W4) 1-1/2x3/16 - 834x5548.9

REGISTERED PROFESSIONAL ENGINEER
J. TRUDEAU
LICENSEE
NT/NU

Rev.	Date	Par	Description
REV-A	2018-08-24	Julie Lajoie	Review of chimney passages in the grating.
REV-B	2018-08-27	Julie Lajoie	Réajustement d'ouverture.

Projet : Plans new floor
No. Projet : MH.2018.0840_ST

Statut : Révisé	Commentaire :	
Détaillé par : MOISE HARVEY	Trou : 13/16"Ø u/n	Client : UDLIK CONST.
Vérifié par: JEAN TRUDEAU	Soudure : E70XXELECT	No. Dessin : P1007
STRUCTURES M.H. inc. ENTREPRENEUR GÉNÉRAL	Acier : A-1001	
	Peinture: Galvanisé	Sequence : REV-B
	Date : 2018-08-07	

Quantité | Description | Longueur | Finition

Marque	Quantité	Description	Longueur	Nuance	Finition	Poids	Poids total
P1004	2						
p10004	2	PLT10x100x140	140.0	G40.21	Galvanisé	2.423	4.846
	2					2.423	4.846
	2						4.846

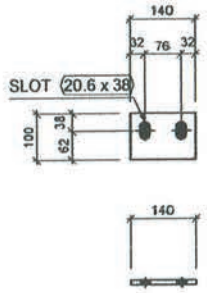

2 - P1004 PLT10x100x140

REGISTERED PROFESSIONAL ENGINEER
J. TRUDEAU
NT/NU

Rev.	Date	Par	Description
REV-A	2018-08-24	Julie Lajoie	Review of chimney passages in the grating.

Projet : Plans new floor

No. Projet : MH.2018.0840_ST

Statut : Approuvé

Commentaire :

Détaillé par : MOISE HARVEY

Vérifié par: JEAN TRUDEAU

Trou : 13/16"Ø u/n

Soudure : E70XXELECT

Acier : G40.21

Peinture: Aucun

Date : 2018-08-07

Client: UDLIK CONST.

No. Dessin : P1004

Sequence : REV-A

STRUCTURES M.H. inc. ENTREPRENEUR GÉNÉRAL

Marque	Quantité	Description	Longueur	Nuance	Finition	Poids	Poids total
P1003	4	Caillebotis					
p10007	4	McNichols GW (19W4) 1-1/2x3/16 - 914x5548.9		A-1001	Galvanisé	589.534	2358.136
	4					589.534	2358.136
	4						2358.136

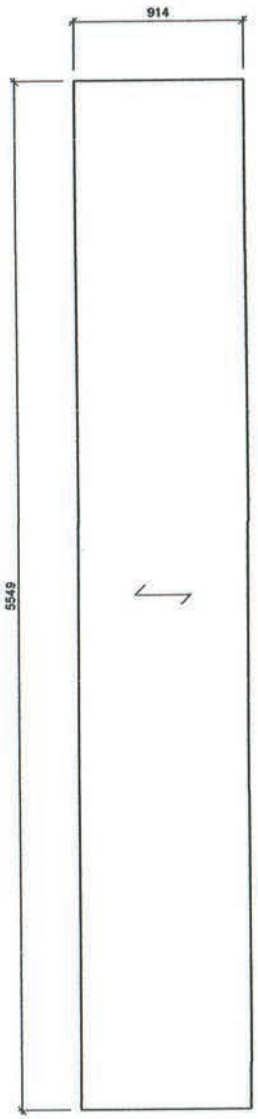

4 - P1003 McNichols GW (19W4) 1-1/2x3/16 - 914x5548.9

REGISTERED PROFESSIONAL ENGINEER
J. TRUDEAU
LICENSEE
NT/NU

Rev.	Date	Par	Description
REV-A	2018-08-24	Julie Lajoie	Review of chimney passages in the grating.

Projet : Plans new floor
No. Projet : MH.2018.0840_ST

Statut : Approuvé	Commentaire :	
Détaillé par : MOISE HARVEY	Trou : 13/16"Ø u/n	Client: UDLIK CONST.
Vérifié par: JEAN TRUDEAU	Soudure : E70XXELECT	No. Dessin : P1003
STRUCTURES M.H. inc. ENTREPRENEUR GÉNÉRAL	Acier : A-1001	
	Peinture: Galvanisé	Sequence : REV-A
	Date : 2018-08-07	

Marque	Quantité	Description	Longueur	Nuance	Finition	Poids	Poids total
B1001	3	Poutre					
b10001	3	C150x12	1340.9	300W	Galvanisé	35.473	106.419
p10000	3	PLT10x123x161	161.0	G40.21	Galvanisé	3.427	10.281
	6					38.900	116.701
	6						116.701

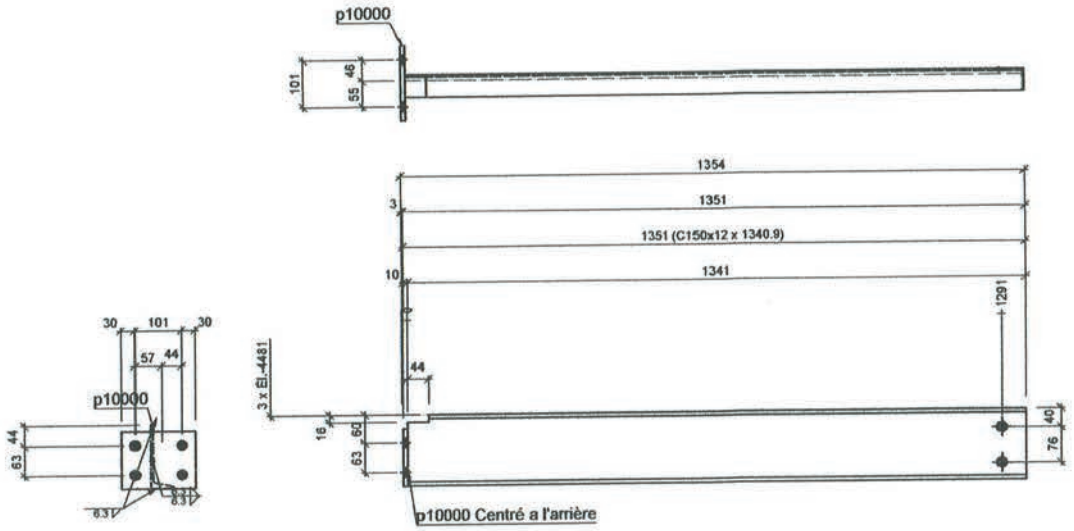

3 - **B1001** C150x12

d=152 b=48 t=8.7 w=5.1 k=17.4

Grid reference

REGISTERED PROFESSIONAL ENGINEER
J. TRUDEAU
LICENSEE
NT/NU

Rev.	Date	Par	Description
REV-A	2018-08-24	Julie Lajoie	Review of chimney passages in the grating.

Projet : Plans new floor

No. Projet : MH.2018.0840_ST

Statut : Approuvé

Commentaire :

Détaillé par : MOISE HARVEY

Trou : 13/16"Ø u/n

Client UDLIK CONST.

Vérifié par: JEAN TRUDEAU

Soudure : E70XXELECT

No. Dessin : B1001

Acier : 300W

Peinture: Aucun

Sequence : REV-A

Date : 2018-08-07

STRUCTURES M.H. inc. ENTREPRENEUR GÉNÉRAL

Marque	Quantité	Description	Longueur	Nuance	Finition	Poids	Poids total
B1002	1	Poutre				35.473	35.473
b10001	1	C150x12	1340.9	300W	Galvanisé	6.648	6.648
p10003	1	PLT13x150x197	197.0	G40.21	Galvanisé	3.427	3.427
p10000	1	PLT10x123x161	161.0	G40.21	Galvanisé	2.423	2.423
p10004	1	PLT10x100x140	140.0	G40.21	Galvanisé	47.971	47.971
	4						
	4						47.971

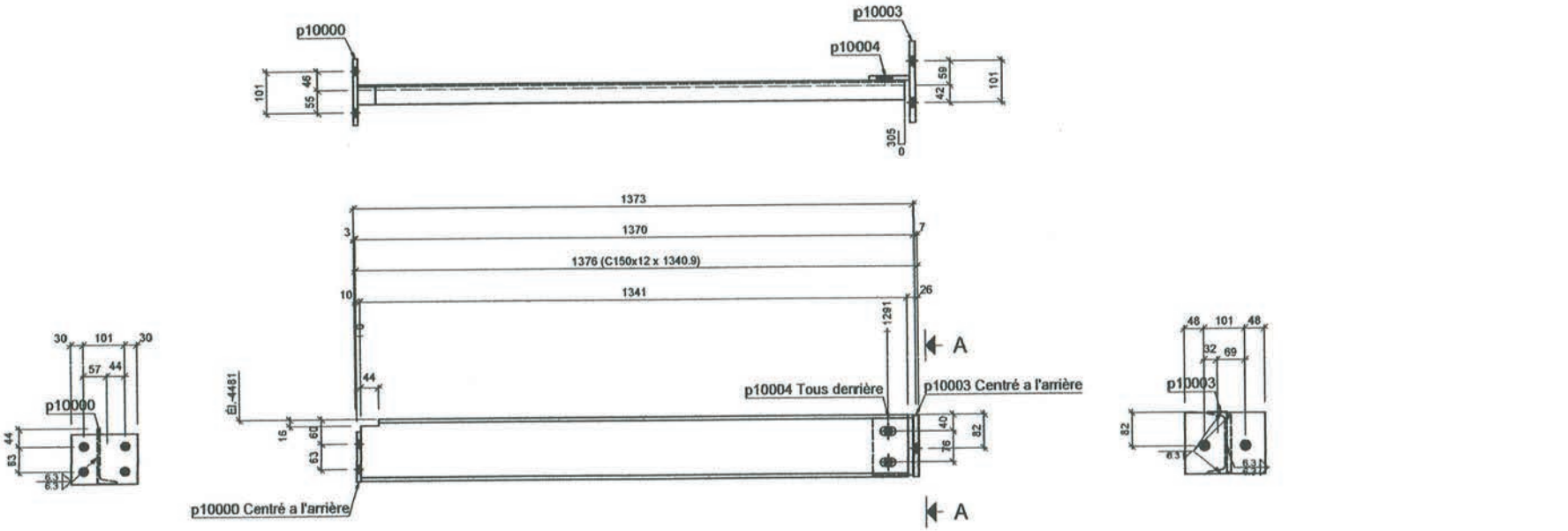

Section A - A

1 - **B1002** C150x12

d=152 b=48 t=8.7 w=5.1 k=17.4

Grid reference

REGISTERED PROFESSIONAL ENGINEER
J. TRUDEAU
LICENSEE
NT/NU

Rev.	Date	Par	Description
REV-A	2018-08-24	Julie Lajoie	Review of chimney passages in the grating.
REV-B	2018-08-27	Julie Lajoie	Réajustement d'ouverture.

Projet : Plans new floor

No. Projet : MH.2018.0840_ST

Statut : Révisé

Commentaire :

Détaillé par : MOISE HARVEY

Vérifié par: JEAN TRUDEAU

Perçu : 13/16"Ø u/h

Soudure : E70XXELECT

Acier : 300W

Peinture: Galvanisé

Date : 2018-08-07

Client: JDLIK CONST.

No. Dessin : B1002

Sequence : REV-B

STRUCTURES M.H. Inc. ENTREPRENEUR GÉNÉRAL

Marque	Quantité	Description	Longueur	Nuance	Finition	Poids	Poids total
B1000	5	Arrêt					
b10000	5	L102X76X6.4	1180.0	300W	Galvanisé	22.112	110.562
	5					22.112	110.562
	5						110.562

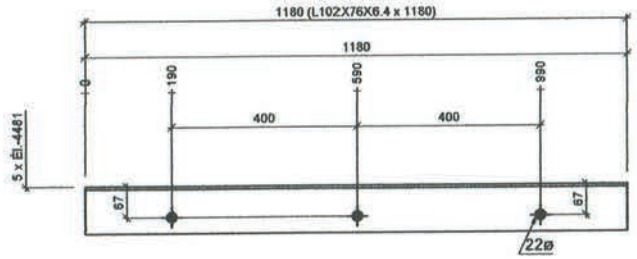

5 - **B1000** L102X76X6.4

d=101.6 b=76.2 t=6.3 w=6.3 k=

Grid reference

REGISTERED PROFESSIONAL ENGINEER
J. TRUDEAU
LICENSEE
NT/NU

Rev.	Date	Par	Description
REV-A	2018-08-24	Julie Lajoie	Review of chimney passages in the grating.

Projet : Plans new floor

No. Projet : MH.2018.0840_ST

Statut : Approuvé	Commentaire :	
Détaillé par : MOISE HARVEY	Trou : 13/16"Ø u/n	Client UDLIK CONST.
Vérifié par: JEAN TRUDEAU	Soudure : E70XXELECT	No. Dessin : B1000
STRUCTURES M.H. inc. ENTREPRENEUR GÉNÉRAL	Acier : 300W	
	Peinture: Aucun	Sequence : REV-A
	Date : 2018-08-07	

Quantité | Description | Longueur | Finition

Marque	Quantité	Description	Longueur	Nuance	Finition	Poids	Poids total
B1003	1	Poutre					
b10002	1	C150x12	1348.1	300W	Galvanisé	35.665	35.665
p10000	1	PLT10x123x161	161.0	G40.21	Galvanisé	3.427	3.427
	2					39.092	39.092
	2						39.092

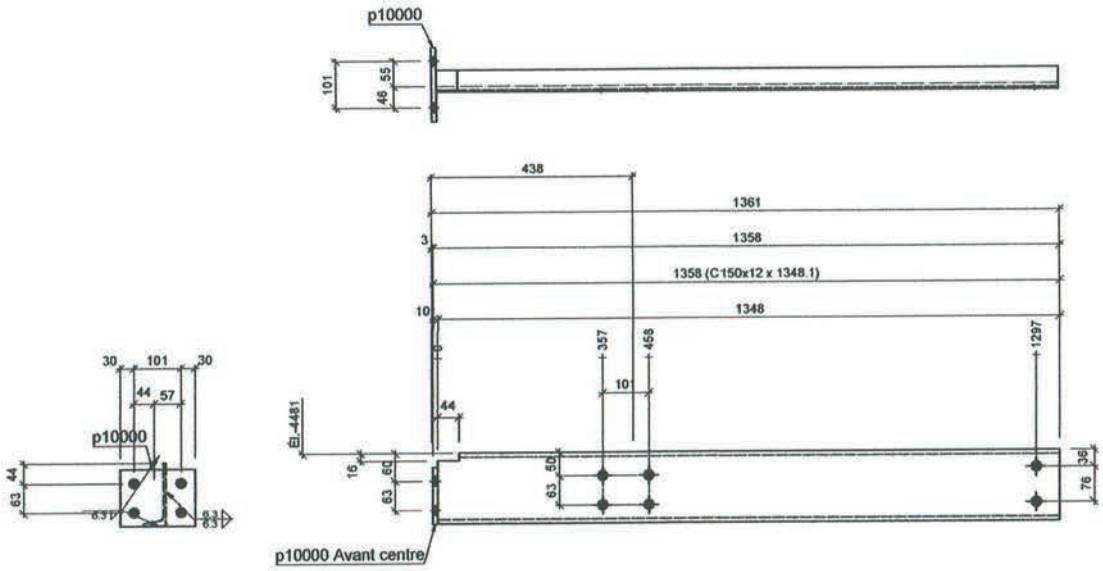

p10000 Avant centre

1 - **B1003** C150x12

d=152 b=48 t=8.7 w=5.1 k=17.4

Grid reference

REGISTERED PROFESSIONAL ENGINEER
J. TRUDEAU
LICENSEE
NT/NU

Rev.	Date	Par	Description
REV-A	2018-08-24	Julie Lajoie	Review of chimney passages in the grating.

Projet : Plans new floor

No. Projet : MH.2018.0840_ST

Statut : Approuvé

Commentaire :

Détaillé par : MOISE HARVEY

Vérifié par: JEAN TRUDEAU

Trou : 13/16"Ø u/n

Soudure : E70XXELECT

Acier : 300W

Peinture: Aucun

Date : 2018-08-07

Client: DLIK CONST.

No. Dessin : B1003

Sequence : REV-A

STRUCTURES M.H. inc. ENTREPRENEUR GÉNÉRAL

Marque	Quantité	Description	Longueur	Nuance	Finition	Poids	Poids total
B1004	1	Poutre					
b10003	1	C150x12	1348.1	300W	Galvanisé	35.665	35.665
p10000	1	PLT10x123x161	161.0	G40.21	Galvanisé	3.427	3.427
	2					39.092	39.092
	2						39.092

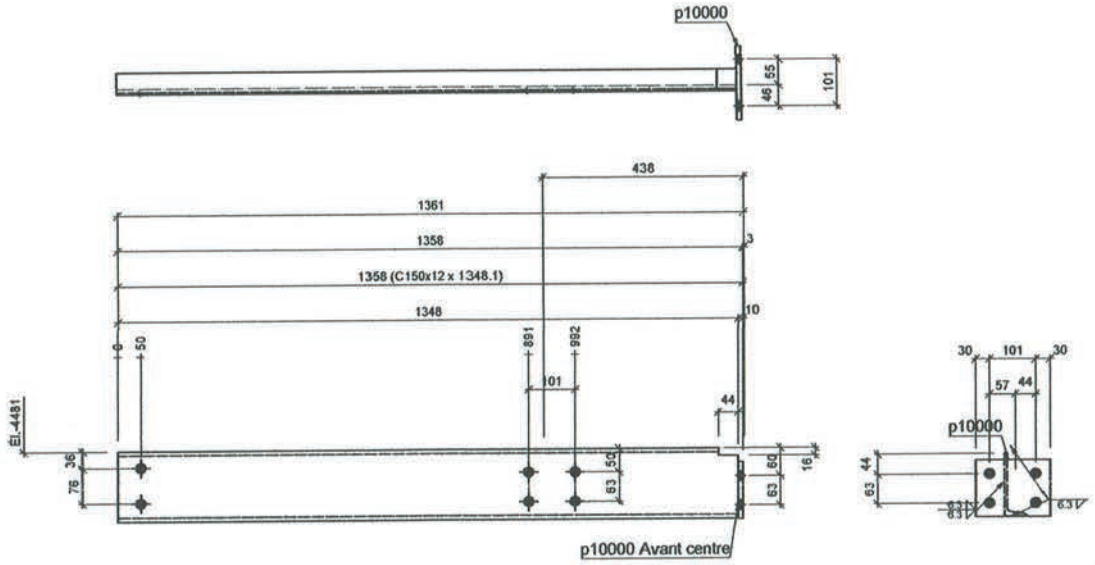

1 - **B1004** C150x12

d=152 b=48 t=8.7 w=5.1 k=17.4

Grid reference

REGISTERED PROFESSIONAL ENGINEER
J. TRUDEAU
NT/NU

Rev.	Date	Par	Description
REV-A	2018-08-24	Julie Lajoie	Review of chimney passages in the grating.

Projet : Plans new floor

No. Projet : MH 2018 0840_ST

Statut : Approuvé	Commentaire :	
Détaillé par : MOISE HARVEY	Trou : 13/16"Ø u/n	Client : UDLIK CONST.
Vérifié par: JEAN TRUDEAU	Soudure : E70XXELECT	No. Dessin : B1004
STRUCTURES M.H. inc. ENTREPRENEUR GÉNÉRAL	Acier : 300W	
	Peinture : Aucun	Séquence : REV-A
	Date : 2018-08-07	

Marque	Quantité	Description	Longueur	Nuance	Finition	Poids	Poids total
B1005	1						
b10004	1	C150x12	895.0	300W	Galvanisé	23.678	23.678
p10000	2	PLT10x123x161	161.0	G40.21	Galvanisé	3.427	6.854
	3					30.532	30.532
	3						30.532

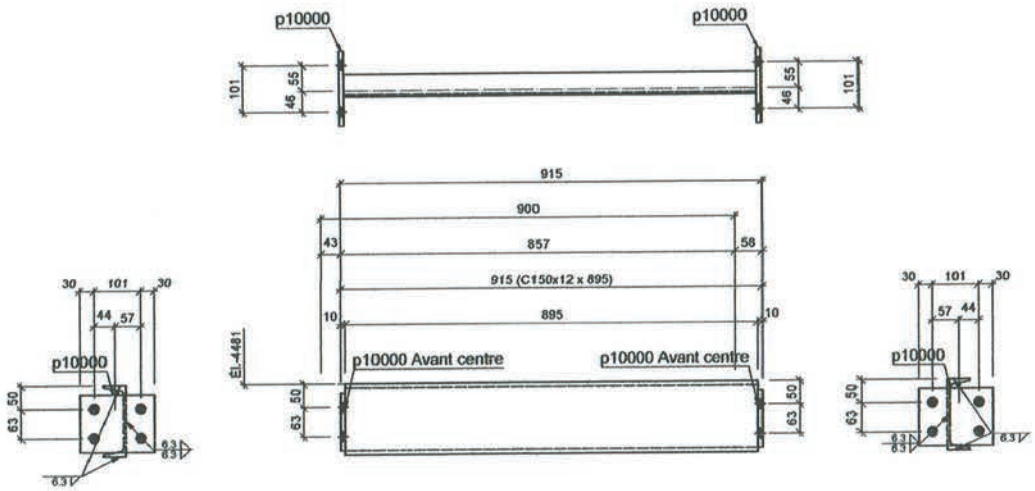

1- **B1005** C150x12

d=152 b=48 t=8.7 w=5.1 k=17.4

Grid reference

REGISTERED PROFESSIONAL ENGINEER
J. TRUDEAU
LICENSEE
NT/NU

Rev.	Date	Par	Description
REV-A	2018-08-24	Julie Lajoie	Review of chimney passages in the grating.

Projet : Plans new floor

No. Projet : MH.2018.0840_ST

Statut : Approuvé

Commentaire :

Détaillé par : MOISE HARVEY

Vérifié par: JEAN TRUDEAU

Ferrou : 13/16"Ø u/n

Soudure : E70XXELECT

Acier : 300W

Peinture: Aucun

Date : 2018-08-07

Client: UDLIK CONST.

No. Dessin : B1005

Sequence : REV-A

STRUCTURES M.H. inc. ENTREPRENEUR GÉNÉRAL

Marque	Quantité	Description	Longueur	Nuance	Finition	Poids	Poids total
B1006	1	Arrêt					
b10010	1	L102X76X6.4	1104.0	300W	Galvanisé	20.688	20.688
	1					20.688	20.688
	1						20.688

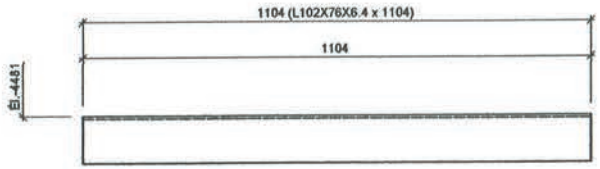

1 - B1006 L102X76X6.4

d=101.6 b=76.2 t=6.3 w=6.3 k=

Grid reference

REGISTERED PROFESSIONAL ENGINEER
J. TRUDEAU
LICENSEE
NT/NU

Rev.	Date	Par	Description
REV-A	2018-08-24	Julie Lajoie	Review of chimney passages in the grating.

Projet : Plans new floor

No. Projet : MH.2018.0840_ST

Statut : Approuvé	Commentaire :	
Détaillé par : MOISE HARVEY	Trou : 13/16"Ø u/n	Client: UDLIK CONST.
Vérifié par: JEAN TRUDEAU	Soudure : E70XXELECT	No. Dessin : B1006
STRUCTURES M.H. inc. ENTREPRENEUR GÉNÉRAL	Acier : 300W	
	Peinture: Aucun	Sequence : REV-A
	Date : 2018-08-07	

Marque	Quantité	Description	Longueur	Nuance	Finition	Poids	Poids total
B1007	1	Arrêt					
b10008	1	L102X76X6.4	1148.0	300W	Galvanisé	21.513	21.513
	1					21.513	21.513
	1						21.513

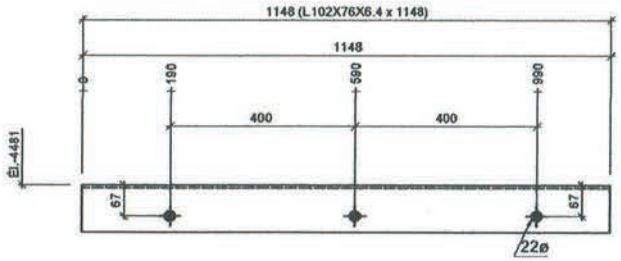

1 - B1007 L102X76X6.4

d=101.6 b=76.2 t=6.3 w=6.3 k=

Grid reference

REGISTERED PROFESSIONAL ENGINEER
J. TRUDEAU
LICENSEE
NT/NU

Rev.	Date	Par	Description
REV-A	2018-08-24	Julie Lajoie	Review of chimney passages in the grating.

Projet : Plans new floor

No. Projet : MH.2018.0840_ST

Statut : Approuvé

Commentaire :

Détaillé par : MOISE HARVEY

Trou : 13/16"Ø u/h

Client UDLIK CONST.

Vérifié par: JEAN TRUDEAU

Soudure : E70XXELECT

No. Dessin : B1007

Acier : 300W

Peinture: Aucun

Sequence : REV-A

Date : 2018-08-07

STRUCTURES M.H. inc. ENTREPRENEUR GÉNÉRAL

Marque	Quantité	Description	Longueur	Nuance	Finition	Poids	Poids total
B1008	1	Arrêt					
b10009	1	L102X76X6.4	1129.0	300W	Galvanisé	21.157	21.157
	1					21.157	21.157
	1						21.157

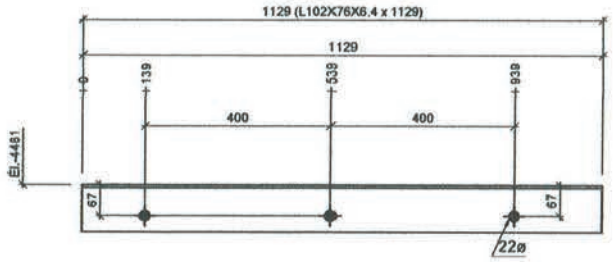

1 - B1008 L102X76X6.4

d=101.6 b=76.2 t=6.3 w=6.3 k=

Grid reference

REGISTERED PROFESSIONAL ENGINEER
J. TRUDEAU
LICENSEE
NT/NU

Rev.	Date	Par	Description
REV-A	2018-08-24	Julie Lajoie	Review of chimney passages in the grating.

Projet : Plans new floor

No. Projet : MH.2018.0840_ST

Statut : Approuvé	Commentaire :	
Détaillé par : MOISE HARVEY	Perçu : 13/16"Ø u/h	Client UDLIK CONST.
Vérifié par: JEAN TRUDEAU	Soudure : E70XXELECT	No. Dessin : B1008
STRUCTURES M.H. inc. ENTREPRENEUR GÉNÉRAL	Acier : 300W	
	Peinture: Aucun	Sequence : REV-A
	Date : 2018-08-07	

Marque	Quantité	Description	Longueur	Nuance	Finition	Poids	Poids total
B1009	1						
b10007	1	L102X76X6.4	1609.1	300W	Galvanisé	30.153	30.153
	1					30.153	30.153
	1						30.153

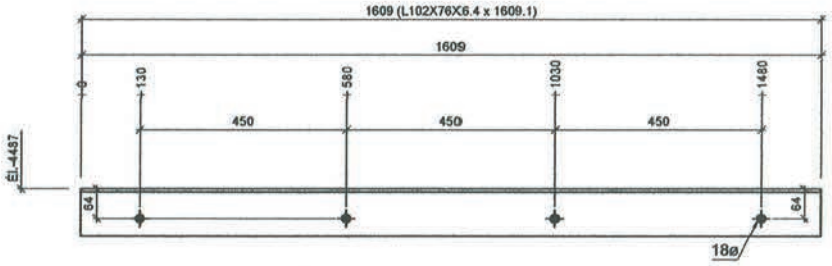

1 - B1009 L102X76X6.4

d=101.6 b=76.2 t=6.3 w=6.3 k=

Grid reference

REGISTERED PROFESSIONAL ENGINEER
J. TRUDEAU
LICENSEE
NT/NU

Rev.	Date	Par	Description
REV-A	2018-08-24	Julie Lajoie	Review of chimney passages in the grating.

Projet : Plans new floor

No. Projet : MH.2018.0840_ST

Statut : Approuvé

Commentaire :

Détaillé par : MOISE HARVEY

Trou : 13/16"Ø u/h

Client UDLIK CONST.

Vérifié par: JEAN TRUDEAU

Soudure : E70XXELECT

No. Dessin : B1009

Acier : 300W

Peinture: Aucun

Date : 2018-08-07

Sequence : REV-A

STRUCTURES M.H. inc ENTREPRENEUR GÉNÉRAL

Marque	Quantité	Description	Longueur	Nuance	Finition	Poids	Poids total
B1010	1						
b10006	1	L102X76X6.4	2960.9	300W	Galvanisé	55.485	55.485
	1					55.485	55.485
	1						55.485

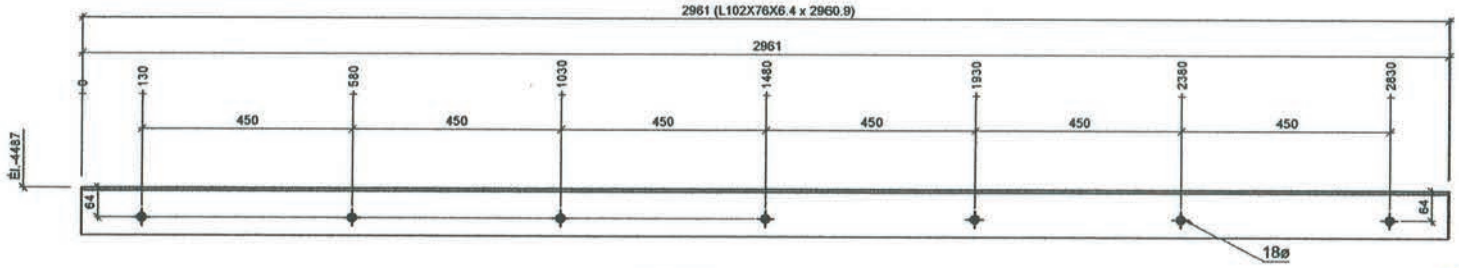

1 - B1010 L102X76X6.4

d=101.6 b=76.2 t=6.3 w=6.3 k=

Grid reference

REGISTERED PROFESSIONAL ENGINEER
J. TRUDEAU
LICENSEE
NT/NU

Rev.	Date	Par	Description
REV-A	2018-08-24	Julie Lajoie	Review of chimney passages in the grating.

Projet : Plans new floor

No. Projet : MH.2018.0840_ST

Statut : Approuvé

Commentaire :

Détaillé par : MOISE HARVEY

Trou : 13/16"Ø u/h

Client : UDLIK CONST.

Vérifié par: JEAN TRUDEAU

Soudure : E70XXELECT

No. Dessin : B1010

Acier : 300W

Peinture : Aucun

Date : 2018-08-07

Sequence : REV-A

STRUCTURES M.H. inc. ENTREPRENEUR GÉNÉRAL

Marque	Quantité	Description	Longueur	Nuance	Finition	Poids	Poids total
B1012	1	Poutre					
b10011	1	W250x22	6047.6	350W	Galvanisé	298.652	298.652
	1					298.652	298.652
	1						298.652

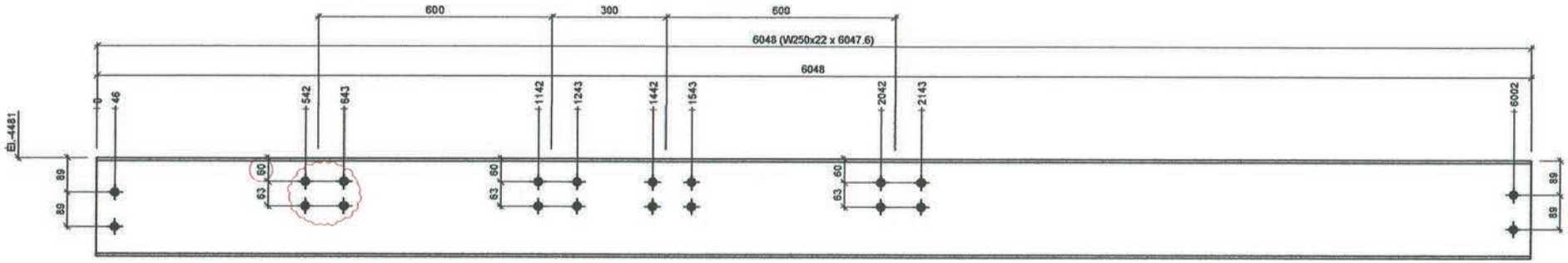

1 - **B1012** W250x22

d=254 | b=102 | t=6.9 | w=5.8 | k=20

Grid reference

REGISTERED PROFESSIONAL ENGINEER
JEAN TRUDEAU
LICENSEE
NT/NU

Rev.	Date	Par	Description
REV-A	2018-08-24	Julie Lajoie	Review of chimney passages in the grating.
REV-B	2018-08-27	Julie Lajoie	Réajustement d'ouverture.

Projet : Plans new floor

No. Projet : MH.2018.0840_ST

Statut : Révisé	Commentaire :	
Détaillé par : MOISE HARVEY	Trou : 13/16"Ø u/h	Client: DLIK CONST.
Vérifié par: JEAN TRUDEAU	Soudure : E70XXELECT	No. Dessin : B1012
STRUCTURES M.H. inc. ENTREPRENEUR GÉNÉRAL	Acier : 350W	
	Peinture: Galvanisé	Sequence : REV-B
	Date : 2018-08-07	

Marque	Quantité	Description	Longueur	Nuance	Finition	Poids	Poids total
B1011	1						
b10005	1	L102X76X6.4	3679.9	300W	Galvanisé	68.959	68.959
	1					68.959	68.959
	1						68.959

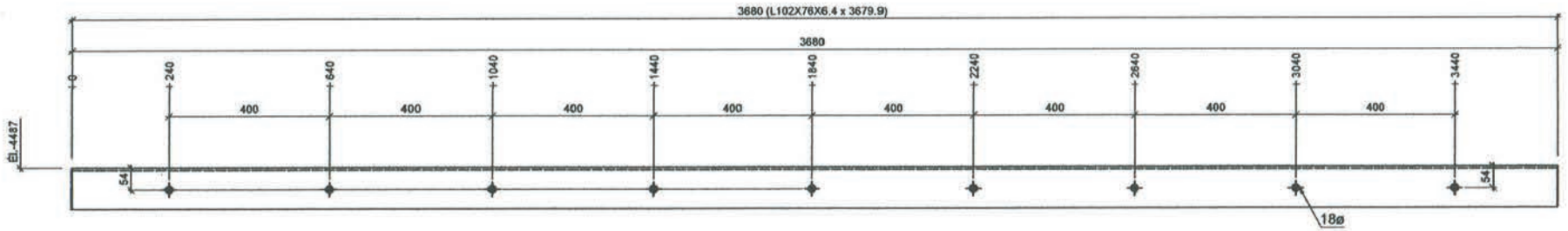

1 - B1011 L102X76X6.4

d=101.6 b=76.2 t=6.3 w=6.3 k=

Grid reference

REGISTERED PROFESSIONAL ENGINEER
LICENSEE
NT/NU

Rev.	Date	Par	Description
REV-A	2018-08-24	Julie Lajoie	Review of chimney passages in the grating.

Projet : Plans new floor

No. Projet : MH.2018.0840_ST

Statut : Approuvé	Commentaire :	
Détaillé par : MOISE HARVEY	Trou : 13/16"Ø u/n	Client : UDLIK CONST.
Vérifié par: JEAN TRUDEAU	Soudure : E70XXELECT	No. Dessin : B1011
STRUCTURES M.H. inc. ENTREPRENEUR GÉNÉRAL	Acier : 300W	
	Peinture: Aucun	Sequence : REV-A
	Date : 2018-08-07	

Marque	Quantité	Description	Longueur	Nuance	Finition	Poids	Poids total
B1013	1	Poutre					
b10012	1	W250x22	6047.6	350W	Galvanisé	298.652	298.652
	1					298.652	298.652
	1						298.652

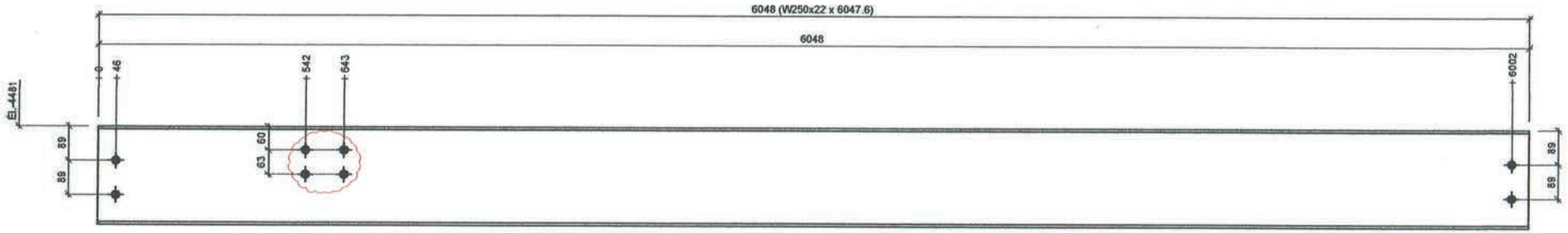

1 - B1013 W250x22

d=254 b=102 t=6.9 w=5.8 k=20

Grid reference

REGISTERED PROFESSIONAL ENGINEER
J. TRUDEAU
LICENSÉE
NT/NU

Rev.	Date	Par	Description
REV-A	2018-08-24	Julie Lajoie	Review of chimney passages in the grating.
REV-B	2018-08-27	Julie Lajoie	Réajustement d'ouverture.

Projet : Plans new floor

No. Projet : MH.2018.0840_ST

Statut : Révisé	Commentaire :	
Détaillé par : MOISE HARVE	Trou : 13/16"Ø u/n	Client: JDLIK CONST.
Vérifié par: JEAN TRUDEAU	Soudure : E70XXELECT	No. Dessin : B1013
STRUCTURES M.H. inc. ENTREPRENEUR GÉNÉRAL	Acier : 350W	
	Peinture: Galvanisé	Sequence : REV-B
	Date : 2018-08-07	

Marque	Quantité	Description	Longueur	Nuance	Finition	Poids	Poids total
P801	1	Caillebotis					
p8001	1	McNichols GW (19W4) 1-1/2x3/16 - 914x5548.9		A-1001	Galvanisé	589.534	589.534
	1					589.534	589.534
	1						589.534

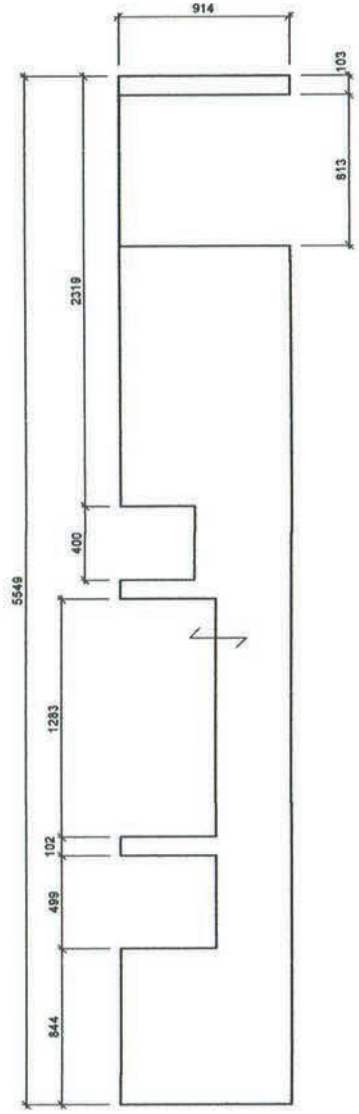

1 - P801 McNichols GW (19W4) 1-1/2x3/16 - 914x5548.9

REGISTERED PROFESSIONAL ENGINEER
J. TRUDEAU
LICENSEE
NT/NU

Rev.	Date	Par	Description
REV-A	2018-08-24	Julie Lajoie	Review of chimney passages in the grating.

Projet : Plans new floor
No. Projet : MH.2018.0840_ST

Statut : Approuvé	Commentaire :	
Détaillé par : MOISE HARVEY	Trou : 13/16"Ø u/n	Client: UDLIK CONST.
Vérifié par: JEAN TRUDEAU	Soudure : E70XXELECT	No. Dessin : P801
STRUCTURES M.H. inc. ENTREPRENEUR GÉNÉRAL	Acier : A-1001	
	Peinture: Galvanisé	Sequence : REV-A
	Date : 2018-08-07	

Marque	Quantité	Description	Longueur	Nuance	Finition	Poids	Poids total
P800	1	Caillebotis					
p8000	1	McNichols GW (19W4) 1-1/2x3/16 - 669x5548.9			A-1001	Galvanisé	431.508	431.508
	1					431.508	431.508
	1						431.508

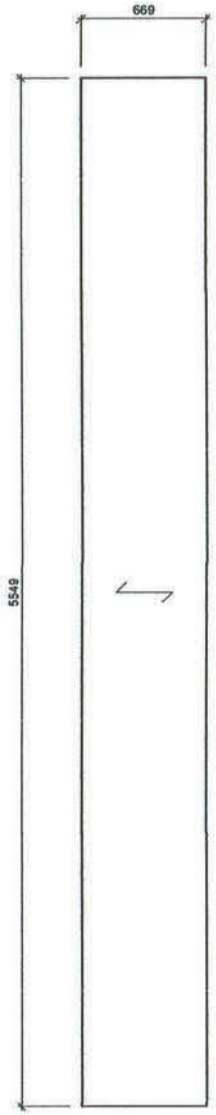

1 - P800 McNichols GW (19W4) 1-1/2x3/16 - 669x5548.9

REGISTERED PROFESSIONAL ENGINEER
J. TRUDEAU
LICENSEE
NT/NU

Rev.	Date	Par	Description
REV-A	2018-08-24	Julie Lajoie	Review of chimney passages in the grating.

Projet : Plans new floor
No. Projet : MH.2018.0840_ST

Statut : Approuvé	Commentaire :	
Détaillé par : MOISE HARVEY	Trou : 13/16"Ø u/n	Client : UDLIK CONST.
Vérifié par: JEAN TRUDEAU	Soudure : E70XXELECT	No. Dessin : P800
STRUCTURES M.H. inc ENTREPRENEUR GÉNÉRAL	Acier : A-1001	
	Peinture : Galvanisé	Sequence : REV-A
	Date : 2018-08-07	

Marque	Quantité	Description	Longueur	Nuance	Finition	Poids	Poids total
B1014	1	Poutre					
b10013	1	W250x22	6047.6	350W	Galvanisé	298.652	298.652
	1					298.652	298.652
	1						298.652

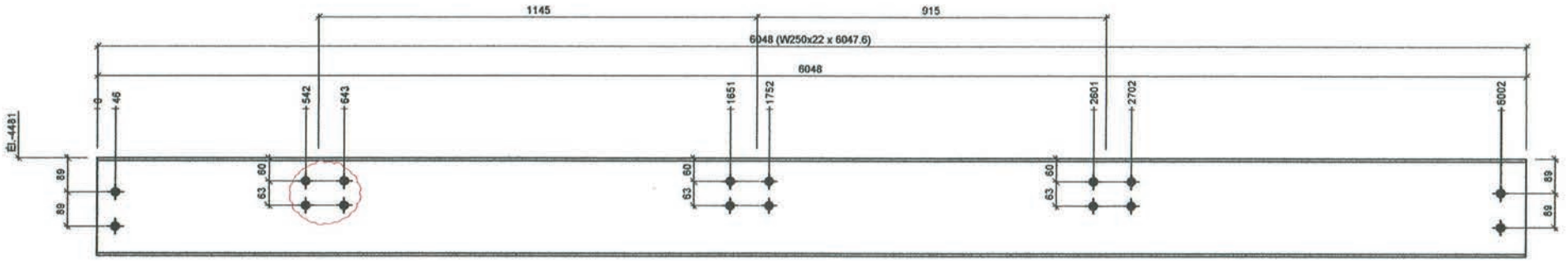

1 - **B1014** W250x22

d=254 b=102 t=6.9 w=5.8 k=20

Grid reference

REGISTERED PROFESSIONAL ENGINEER
J. TRUDEAU
LICENSEE
NT/NU

Rev.	Date	Par	Description
REV-A	2018-08-24	Julie Lajoie	Review of chimney passages in the grating.
REV-B	2018-08-27	Julie Lajoie	Réajustement d'ouverture.

Projet : Plans new floor

No. Projet : MH.2018.0840_ST

Statut : Révisé	Commentaire :	
Détaillé par : MOISE HARVEY	Perçu : 13/16"Ø u/h	Client : UDLIK CONST.
Vérifié par: JEAN TRUDEAU	Soudure : E70XXELECT	No. Dessin : B1014
STRUCTURES M.H. Inc ENTREPRENEUR GÉNÉRAL	Acier : 350W	
	Peinture : Galvanisé	Sequence : REV-B
	Date : 2018-08-07	

Quantité	Description	Longueur	Finition
1	B1014 W250	6047.6	

Marque	Quantité	Description	Longueur	Nuance	Finition	Poids	Poids total
P1001	6	Platine d'extrémité					
p10002	6	PLT12.7x180x266	266.0	G40.21	Galvanisé	10.524	63.141
	6					10.524	63.141
	6						63.141

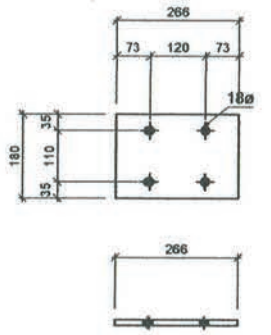

6 - P1001 PLT12.7x180x266

REGISTERED PROFESSIONAL ENGINEER
J. TRUDEAU
LICENSEE
NT/NU

Rev.	Date	Par	Description
REV-A	2018-08-24	Julie Lajoie	Review of chimney passages in the grating.

Projet : Plans new floor
No. Projet : MH.2018.0840_ST

Statut : Approuvé	Commentaire :	
Détaillé par : MOISE HARV	Trou : 13/16"Ø u/h	Client UDLIK CONST.
Vérifié par: JEAN TRUDEA	Soudure : E70XXELECT	No. Dessin : P1001
STRUCTURES M.H. inc ENTREPRENEUR GÉNÉRAL	Acier : G40.21	
	Peinture: Aucun	Sequence : REV-A
	Date : 2018-08-07	

Marque	Quantité	Description	Longueur	Nuance	Finition	Poids	Poids total
P1002	5	Platine d'extrémité					
p10003	5	PLT13x150x197	197.0	G40.21	Galvanisé	6.648	33.241
	5					6.648	33.241
	5						33.241

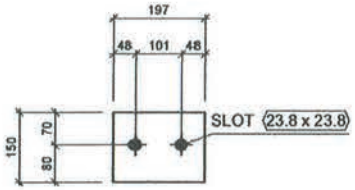

5 - P1002 PLT13x150x197

REGISTERED PROFESSIONAL ENGINEER
J. TRUDEAU
LICENSEE
NT/NU

Rev.	Date	Par	Description
REV-A	2018-08-24	Julie Lajoie	Review of chimney passages in the grating.

Projet : Plans new floor
No. Projet : MH.2018.0840_ST

Statut : Approuvé	Commentaire :	
Détaillé par : MOISE HARVEY	Trou : 13/16"Ø u/h	Client UDLIK CONST.
Vérifié par: JEAN TRUDEAU	Soudure : E70XXELECT	No. Dessin : P1002
STRUCTURES M.H. inc ENTREPRENEUR GÉNÉRAL	Acier : G40.21	
	Peinture: Aucun	Sequence : REV-A
	Date : 2018-08-07	

Marque	Quantité	Description	Longueur	Nuance	Finition	Poids	Poids total
P1000	6						
p10001	6	PLT12.5x100x202	202.0	G40.21	Galvanisé	4.370	26.219
	6					4.370	26.219
	6						26.219

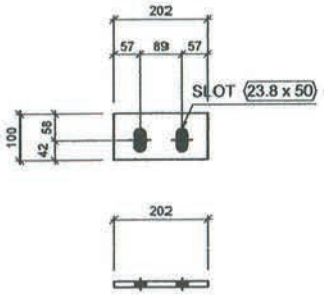

6 - P1000 PLT12.5x100x202

REGISTERED PROFESSIONAL ENGINEER
JEAN TRUDEAU
LICENSEE
NT/NU

Rev.	Date	Par	Description
REV-A	2018-08-24	Julie Lajoie	Review of chimney passages in the grating.

Projet : Plans new floor
No. Projet : MH.2018.0840_ST

Statut : Approuvé	Commentaire :	
Détaillé par : MOISE HARVEY	Trou : 13/16"Ø u/h	Client UDLIK CONST.
Vérifié par: JEAN TRUDEAU	Soudure : E70XXELECT	No. Dessin : P1000
STRUCTURES M.H. inc. ENTREPRENEUR GÉNÉRAL	Acier : G40.21	
	Peinture: Aucun	Sequence : REV-A
	Date : 2018-08-07	

SUBMITTALS IDENTIFICATION SHEET

PROJECT: Wastewater Treatment Plant Upgrade
Iqaluit, Nunavut

NUNAMI
STANTEC LIMITED
1088C Noble House
Iqaluit NU
www.stantec.com

CONTRACTOR: Kudlik Construction Ltd, Project 2018-062

Telephone: 867-979-1166

E-mail: srousseau@kudlik.biz

SUBCONTRACTOR: Structure MH

Person responsible: Moise Harvey

Telephone: (418)487-8772 E-mail: structures.mh@gmail.com

PRODUCT SUBMITTED:

☑ As Specified

☐ Alternate

SUPPLIER or MANUFACTURER:

Person responsible:

Telephone: E-mail:

DESCRIPTION OF SUBMITTAL:

# of pages:

Reference to drawings:

Reference to specs:

Division: 05 Section: 05 12 23 - 05 21 00

REMARKS:

Review of this submission is for compliance wit
omissions in the submission or the responsibilit
Supplier or Manufacturer shall be at their sole r
WITH FIELD DIMENSIONS.

SUBMITTAL TRACKING No.: **STC-010**

REVIEW AND COMMENTS (for use by Consultants):

STANTEC PROJECT #: 110126045 SUBMITTAL # Steel structure - exterior stairs

This review by Stantec is for general conformance with the design concept of Stantec's design of the:
☐ Architectural ☐ Electrical
☑ Structural ☐ Other
☐ Mechanical

component(s) only and does not mean that Stantec has verified or approves the shop drawing(s). The Contractor remains solely responsible for the shop drawing(s) and this review by Stantec does not relieve the Contractor of the Contractor's responsibility for errors or omissions in the shop drawing(s) or for meeting all requirements of the contract documents. This review does not mean that Stantec approves the detailed design inherent in the shop drawing, responsibility for which shall remain with the Contractor submitting same, nor does this review mean that Stantec accepts any deviation of the shop drawing(s) from the contract documents. The Contractor is responsible for confirming all dimensions and correlating them at the job site, for all construction means, methods and techniques, and for coordination of construction work of all trades, including coordination of all shop drawings.

Stantec

☐ REVIEWED
☑ REVIEWED, AS NOTED
☐ REVISE AND RESUBMIT
☐ NOT REVIEWED

DATE 2018-09-17

BY Petr Polivka

The stamp above pertains to all structural members in this document (56 pages) except stairs

See structural notes on page 49-56

STANTEC PROJECT #: 110126045 SUBMITTAL # STC-010 R2 stair

This review by Stantec is for general conformance with the design concept of Stantec's design of the:
☑ Architectural ☐ Electrical
☐ Structural ☐ Other
☐ Mechanical

component(s) only and does not mean that Stantec has verified or approves the shop drawing(s). The Contractor remains solely responsible for the shop drawing(s) and this review by Stantec does not relieve the Contractor of the Contractor's responsibility for errors or omissions in the shop drawing(s) or for meeting all requirements of the contract documents. This review does not mean that Stantec approves the detailed design inherent in the shop drawing, responsibility for which shall remain with the Contractor submitting same, nor does this review mean that Stantec accepts any deviation of the shop drawing(s) from the contract documents. The Contractor is responsible for confirming all dimensions and correlating them at the job site, for all construction means, methods and techniques, and for coordination of construction work of all trades, including coordination of all shop drawings.

Stantec

☐ REVIEWED
☑ REVIEWED, AS NOTED
☐ REVISE AND RESUBMIT
☐ NOT REVIEWED

DATE 2018-09-18

BY TFlender

Note:
This shop drawing was sent after the stair was fabricated and it does not match the approved Stantec design. Stantec cannot approve this shop drawing at this time. We disagree that our design didn't fit and the landings are now not quite ideal on size.
However, it does appear that your design may work but close coordination with structural and our Stantec architectural representative is required on-site. Also it will be Kudliks responsibility to coordinate with the railing and mechanical if necessary.
If the stair is satisfactory and meets all code requirements when installed, Stantec will accept then.

Marque	Quantité	Description	Longueur	Nuance	Finition	Poids	Poids total
s8029	6	Tuyau carré					
s8030	1	HSS127	3017.5	G40.21		164.867	164.867
s8031	1	HSS127	2926.5	G40.21		161.872	161.872
s8032	1	HSS127	1950.5	G40.21		110.044	110.044
s8033	1	HSS127	3436.5	G40.21		193.679	193.679
s8040	2	HSS127	2926.5	G40.21		79.309	158.618
s8045	4	PL 9x108 (s/s4)	946.0	G40.21		41.787	250.724
s8041	1	L 5x3-1/2x5/16	1144.5	300W		24.953	24.953
s8044	1	L 4x3x1/4	2912.6	G40.21		43.709	43.709
s8037	1	L 4x3x1/4	876.3	300W	Galvanisé	13.263	13.263
s8038	1	PL 9x102	876.3	G40.21		7.060	7.060
s8039	1	PL 11x127x9.5	876.3	G40.21		9.691	9.691
	17					975.023	975.023
	17						975.023

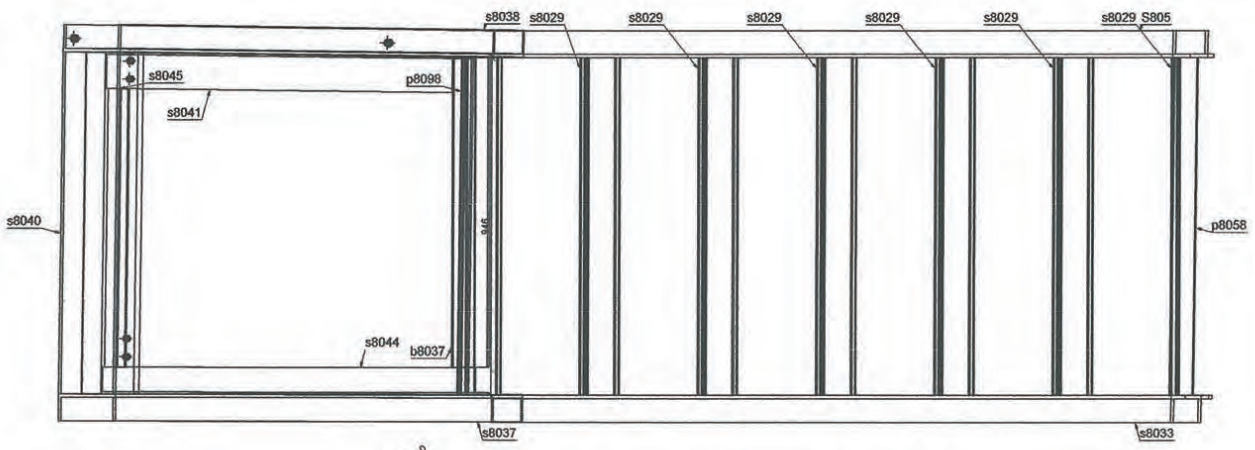

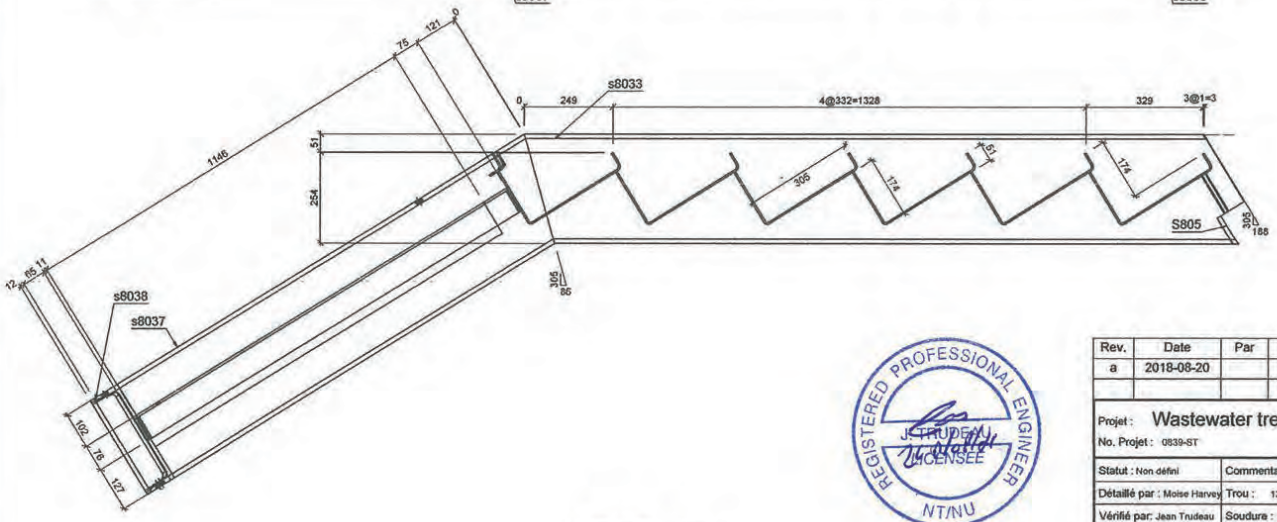

1 - S805 C310X37

REGISTERED PROFESSIONAL ENGINEER
J.TRUDEAU
LICENSEE
NT/NU

Rev.	Date	Par	Description
a	2018-08-20		

Projet : **Wastewater treatment plant**
No. Projet : 0839-ST

Statut : Non défini	Commentaire :	
Détaillé par : Moise Harvey	Trou : 13/16"Ø u/n	Client: tsk construction ltd
Vérifié par: Jean Trudeau	Soudure : E70XXELECT	No. Dessin : S805
STRUCTURES M.H. inc. ENTREPRENEUR GÉNÉRAL	Acier : G40.21	
	Peinture: Aucun	Sequence : a
	Date : 2018-08-20	

Marque	Quantité	Description	Longueur	Nuance	Finition	Poids	Poids total
s8027	1	HSS6x6x1/4	2438.0	G40.21		132.2KG	132.2KG
s8031	1	C310X37	2438.0	G40.21		90.3KG	90.3KG
s8030	1	C310X37	2438.0	G40.21		90.3KG	90.3KG
s8029	1	C430X37	1169.0	G40.21		57.8KG	57.8KG
s8028	1	C310X37	1396.0	G40.21		86.5KG	86.5KG
s8026	1	C310X37	1422.0	G40.21		77.2KG	77.2KG
s8024	1	PL 9.5X254	254.0	G40.21		4.7KG	4.7KG
s8023	1	HSS4x3x1/4	1000.0	G40.21		24.9KG	24.9KG
s8022	1	C310X37	2438.0	G40.21		151.1KG	151.1KG
s8021	1	C310X37	2438.0	G40.21	Galvanisé	151.1KG	151.1KG
s8020	1	C310X37	2438.0	G40.21		151.1KG	151.1KG
s8019	1	PL 19.1X305X1	305.0	G40.21		11.6KG	11.6KG
s8018	1	PL 19X254X305	305.0	G40.21		9.3KG	9.3KG
s8017	1	PL 19X254X305	305.0	G40.21		9.3KG	9.3KG
s8016	1	PL 19X254X305	305.0	G40.21		9.3KG	9.3KG
	24					1213.7KG	1213.7KG
	24						1233.0KG

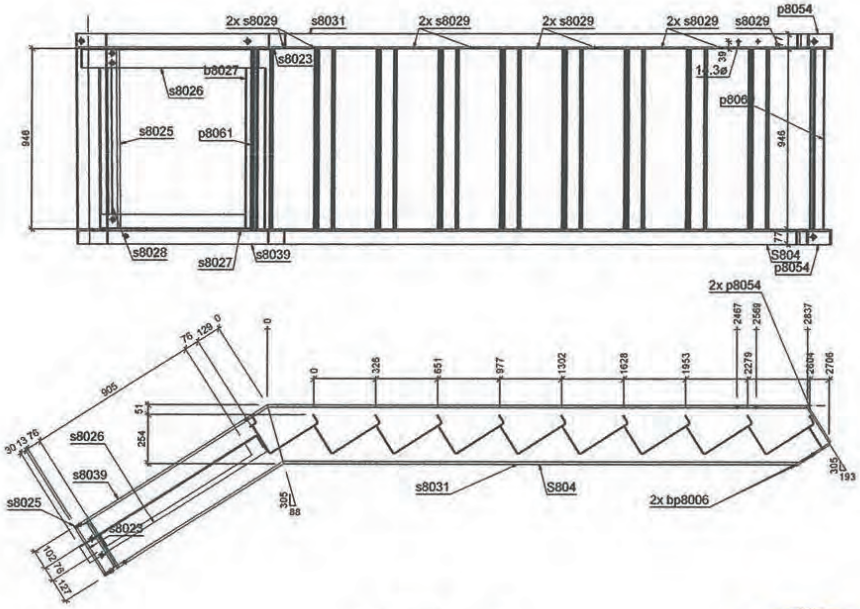

1- S804 C310X37



Description	Longueur	Peinture
PL 19.1X305	305	
PL 19X254	254	

6.3

Sauf indication contraire

Rev.	Date	Par	Description
a	2018-08-20		

Projet : Wastewater treatment plant

No. Projet : 0539-ST

Statut : Non défini	Commentaire :	
Détaillé par : Moise Harvey	Trou : 13/16"Ø u/n	Client : Nisk construction ltd
Vérifié par: Jean Trudeau	Soudure : E70XXELECT	No. Dessin : S804
STRUCTURES M.H. inc. ENTREPRENEUR GÉNÉRAL	Acier : G40.21	
	Peinture: Aucun	Sequence : a
	Date : 2018-08-15	

Marque	Quantité	Description	Longueur	Nuance	Finition	Poids	Poids total
p8085	1	Plaque soudée	1000.0	G40.21		369.048	369.048
p8097	1	C310X37	2616.0	G40.21		96.619	96.619
p8101	1	C310X37	2616.0	G40.21		96.619	96.619
s8029	5	C310X37	1107.0	G40.21		204.151	1020.753
s8029	1	C310X37	1107.0	G40.21		204.151	204.151

Marque	Quantité	Description	Longueur	Nuance	Finition	Poids	Poids total
C818	1	Poteau					
C8008	1	HS76x76x4.8	1427.0	G40.21M-350W		32.494	32.494
bp8007	1	PL1 10x72x183	183.0	G40.21		6.744	6.744
bp8057	1	PL1 10x72x183	183.0	G40.21		2.430	2.430
	1					41.573	41.573
	2						41.573

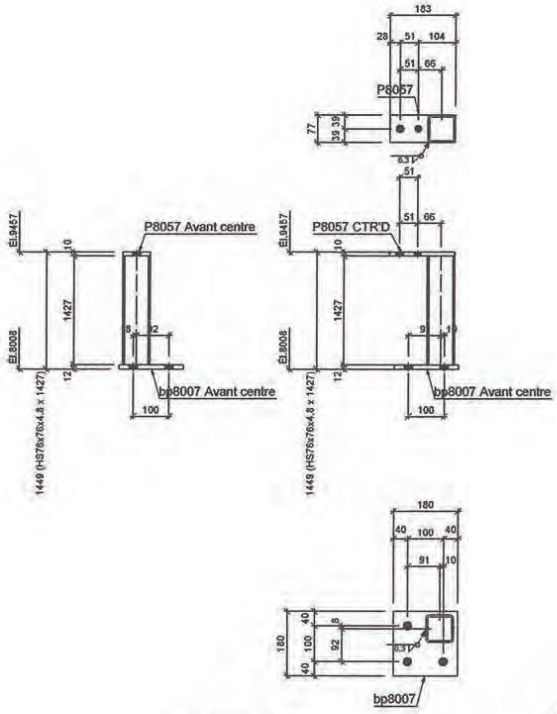

1 - C818 HS76x76x4.8

d=76.2 b=76.2 t=4.8 w=4.8 k=

Grid reference (/)

REGISTERED PROFESSIONAL ENGINEER
J. TRUDEAU
LICENSEE
NT/NU

6.3

Sauf indication contraire

Rev.	Date	Par	Description
a	2018-08-20		

Projet : **Wastewater treatment plant**

No. Projet : 0839-ST

Statut : Non défini	Commentaire :	
Détaillé par : Moise Harvey	Trou : 13/16"Ø u/n	Client : Clark construction ltd
Vérifié par: Jean Trudeau	Soudure : E70XXELECT	No. Dessin : C818
STRUCTURES M.H. inc. INGÉNIEURS GÉNÉRAL	Acier : G40.21M-350W	
	Peinture: Aucun	Sequence : a
	Date : 2018-08-20	

Marque	Quantité	Description	Longueur	Nuance	Finition	Poids	Poids total
P802							
p8084	1	PLT6x67.2x202.8	202.8	G40.21		0.416	0.831
p8102	1	PLT6x67.2x202.8	202.8	G40.21		0.580	0.580
p8103	1	PLT6x67.2x72.6	72.6	G40.21		0.524	0.540
p8104	1	PLT6x68.2x77.1	77.0	G40.21		0.548	0.545
p8075	1	PLT6x67.2x78.7	78.7	G40.21		0.528	0.528
	6					0.641	0.641
	8						5.041

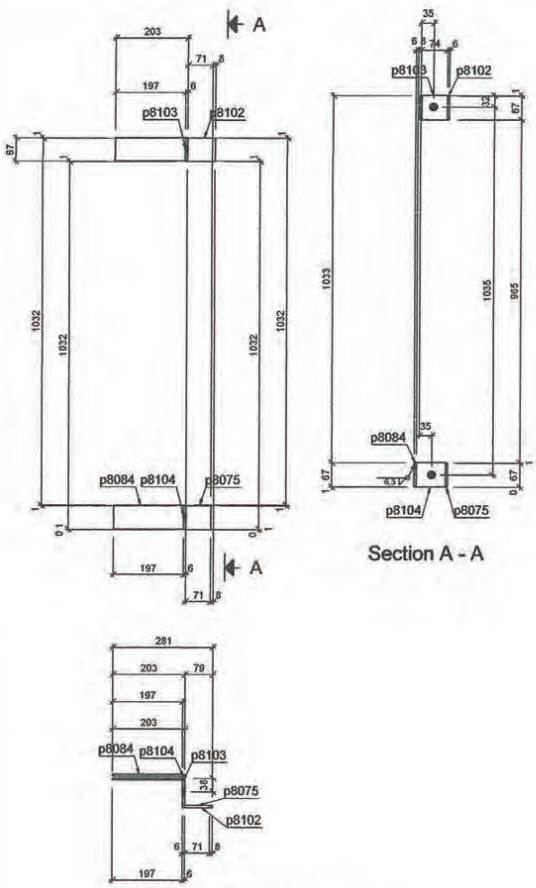

Section A - A

1 - P802 PLT6x67.2x202.8

REGISTERED PROFESSIONAL ENGINEER
J. TRUDEAU
LICENSEE
NT/NU

Rev.	Date	Par	Description
a	2018-08-20		

Projet : **Wastewater treatment plant**

No. Projet : 0839-ST

Statut : Non défini	Commentaire :	
Détaillé par : Moise Harvey	Trou : 13/16"Ø u/n	Client : Lak construction ltd
Vérifié par: Jean Trudeau	Soudure : E70XXELECT	No. Dessin : P802
STRUCTURES M.H. inc. ENTREPRENEUR GENERAL	Acier : G40.21	
	Peinture: Aucun	Sequence : a
	Date : 2018-08-20	

Marque	Quantité	Description	Longueur	Nuance	Finition	Poids	Poids total
P801	4						
P807	4	PLT25x350x350	350.0	G40.21		53.001	212.002
P808	16	PLT 12 Rotation 135	150.0			0.000	0.000
	20					53.001	212.002
	20						212.002

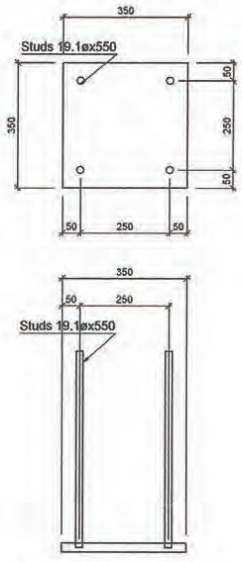

4 - P801 PLT25x350x350

REGISTERED PROFESSIONAL ENGINEER
J. TRUDEAU
LICENSEE
NT/NU

Rev.	Date	Par	Description
a	2018-08-20		

Projet : **Wastewater treatment plant**

No. Projet : 0839-ST

Statut : Non défini	Commentaire :	
Détaillé par : Moise Harvey	Trou : 13/16"Ø u/h	Client : Kik construction ltd
Vérifié par: Jean Trudeau	Soudure : E70XXELECT	No. Dessin : P801
STRUCTURES M.H. inc. ENTREPRENEUR GENERAL	Acier : G40.21	
	Peinture: Aucun	Sequence : a
	Date : 2018-08-20	

Quantité | Description | Longueur | Finition

Marque	Quantité	Description	Longueur	Nuance	Finition	Poids	Poids total
M810	1	HSS 42X2.6	3487	350W-CLC		11.370	11.370
m8049	1	HSS 42X2.6	2053	350W-CLC		6.697	6.697
m8051	1	HSS 42X2.6	1600	350W-CLC		5.220	5.220
m8046	1	HSS 42X2.6	1600	350W-CLC		5.220	5.220
m8053	1	HSS 42X2.6	1600	350W-CLC		5.220	5.220
m8050	1	HSS 42X2.6	1600	350W-CLC		5.220	5.220
m8047	1	HSS 42X2.6	1600	350W-CLC		5.220	5.220
m8048	1	HSS 42X2.6	1600	350W-CLC		5.220	5.220
m8052	1	HSS 42X2.6	1600	350W-CLC		5.220	5.220
m8054	1	HSS 42X2.6	1600	350W-CLC		5.220	5.220
p8053	8	PLTE 13	90	A36	Peint	0.423	3.382
p8059	2	PLTE 13	90	A36	Peint	0.423	0.846
b8022	8	5/8 SB	90	A36	Peint	0.251	2.010
b8023	8	5/8 SB	90	A36	Peint	0.251	2.010
p8060	1	PLTE 13	90	350W-CLC		0.423	0.423
b8026	1	5/8 SB	90	350W-CLC		0.251	0.251
	43					55.474	55.474

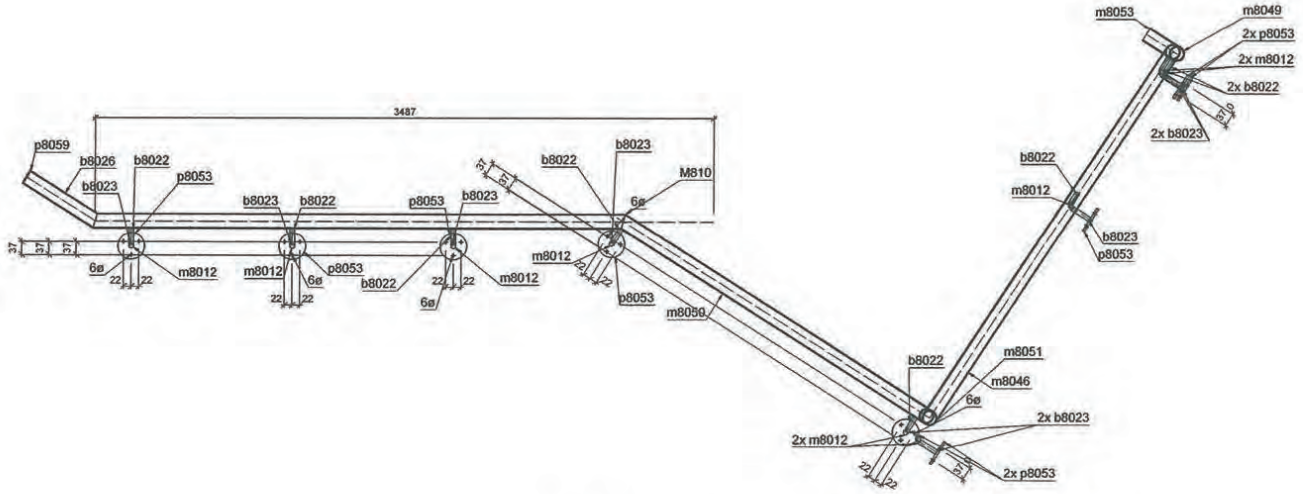

1 - M810 HSS 42X2.6

REGISTERED PROFESSIONAL ENGINEER
J. TRUDEAU
LICENSEE
NT/NU

Rev.	Date	Par	Description
a	2018-08-20		

Projet : Wastewater treatment plant
No. Projet : 0839-ST

Statut : Non défini	Commentaire :	
Détaillé par : Moise Harvey	Trou : 13/16"Ø u/n	Client : Klondik construction ltd
Vérifié par: Jean Trudeau	Soudure : E70XXELECT	No. Dessin : M810
STRUCTURES M.H. INC.	Acier : 350W-CLC	
	Peinture: Aucun	Sequence : a
	Date : 2018-08-20	

Marque	Quantité	Description	Longueur	Nuance	Finition	Poids	Poids total
[illegible]		[illegible]					
[illegible]	1	[illegible]	[illegible]	[illegible]		20,148	20,148
[illegible]	1	[illegible]	[illegible]	[illegible]		1,911	1,911
[illegible]	1	[illegible]	[illegible]	[illegible]		1,201	1,201
[illegible]	1	[illegible]	[illegible]	[illegible]		0,447	0,447
[illegible]	1	[illegible]	[illegible]	[illegible]	[illegible]	0,126	0,126
[illegible]	1	[illegible]	[illegible]	[illegible]	[illegible]	0,083	0,083
[illegible]	1	[illegible]	[illegible]	[illegible]		0,070	0,070
[illegible]	1	[illegible]	[illegible]	[illegible]		0,081	0,081
	16					27,471	27,471
	16						27,471

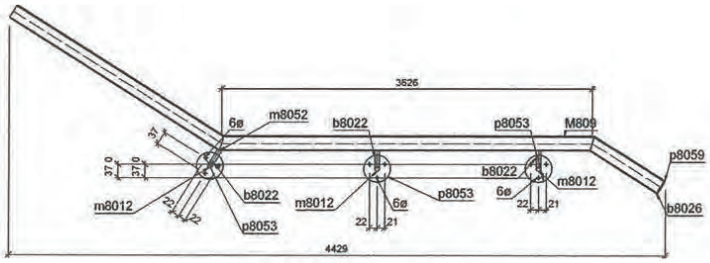

1 - M809 HSS 42X2.6

REGISTERED PROFESSIONAL ENGINEER
J. TRUDEAU
LICENSÉE
NT/NU

Rev.	Date	Par	Description
a	2018-08-20		

Projet : **Wastewater treatment plant**

No. Projet : 0839-ST

Statut : Non défini	Commentaire :	
Détaillé par : Moise Harvey	Trou : 13/16"Ø u/n	Client : [illegible]tik construction ltd
Vérifié par: Jean Trudeau	Soudure : E70XXELECT	No. Dessin : M809
STRUCTURES M.H. inc. ENTREPRENEUR GÉNÉRAL	Acier : 350W-CL.C	
	Peinture: Aucun	Sequence : a
	Date : 2018-08-20	

Quantité | Description | Longueur | Finition

Marque	Quantité	Description	Longueur	Nuance	Finition	Poids	Poids total
Mode		Cycle-Cycle mais Cycle-Cycle					
m8054	1	HSS 42X2.6	3153.7	350W-CLC		17.004	17.004
m8053	2	HSS 42X2.6	76.3	G40.21		0.273	0.273
m8054	3	HSS 42X2.6	76.3	G40.21		0.273	0.273
m8053	4	HSS 42X2.6	57.5	A36	Peint	0.206	0.206
m8054	5	HSS 42X2.6	57.5	A36	Peint	0.206	0.206
m8053	6	HSS 42X2.6	76.3	G40.21		0.273	0.273
	14					19.565	19.565
	14						19.565

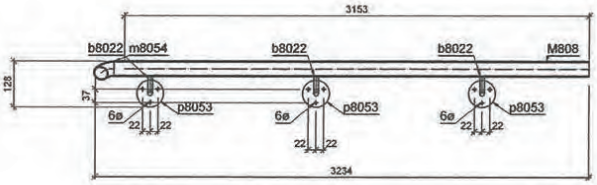

1 - M808 HSS 42X2.6

REGISTERED PROFESSIONAL ENGINEER
J. TRUDEAU
LICENSEE
NT/NU

Rev.	Date	Par	Description
a	2018-08-20		

Projet : **Wastewater treatment plant**

No. Projet : 0839-ST

Statut : Non défini	Commentaire :	
Détaillé par : Moise Harvey	Trou : 13/16"Ø u/n	Client : Atak construction ltd
Vérifié par: Jean Trudeau	Soudure : E70XXELECT	No. Dessin : M808
STRUCTURES M.H. inc. ENTREPRENEUR GÉNÉRAL	Acier : 350W-CL.C	
	Peinture: Aucun	Sequence : a
	Date : 2018-08-20	

Quantité | Description | Longueur | Finition

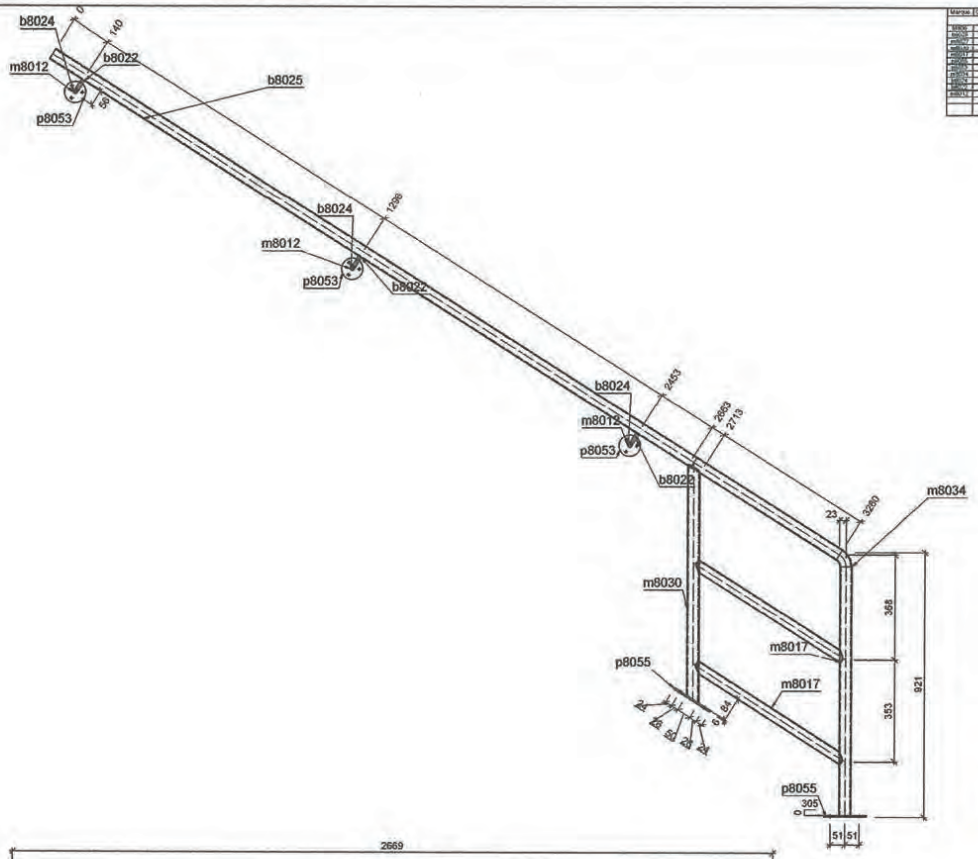

Marque	Quantité	Description	Longueur	Section	Peinture	Poids	Poids total
b8024	1						
b8025	1	HSS 42X2.6	3283.1	350W/LLC		18.104	18.104
b8022	1	HSS 42X2.6	863.1	G40.21		4.761	4.761
m8012	1	HSS 42X2.6	835.1	G40.21		4.607	4.607
m8034	1	HSS 42X2.6	835.1	G40.21		4.607	4.607
m8030	1	PLATE 25MM	863.1	G40.21		14.550	14.550
m8017	1	PLATE 25MM	863.1	G40.21		14.550	14.550
p8055	1	PLATE 25MM	863.1	G40.21		14.550	14.550
p8053	1	HSS 42X2.6	133.1	350W/LLC		0.733	0.733
p8024	1	PB 1/4	97.81	A36	Aucun	0.191	0.191
p8055	1	PB 1/4	98.81	A36	Aucun	0.193	0.193
p8053	1	PB 1/4	98.81	A36	Aucun	0.193	0.193
	20					32.000	32.000
	29						96.866

1 - M806 HSS 42X2.6

d=42.1 b=42.1 t= w=2.6 k=

Grid reference (/)

Rev.	Date	Par	Description
a	2018-08-20		

Projet : Wastewater treatment plant

No. Projet : 0839-ST

Statut : Non défini	Commentaire :	
Détaillé par : Moise Harvey	Trou : 13/16"Ø u/n	Client : Cimaltek construction ltd
Vérifié par: Jean Trudeau	Soudure : E70XXELECT	No. Dessin : M806
STRUCTURES M.H. INC. ENTREPRENEUR GÉNÉRAL	Acier : G40.21	
	Peinture: Aucun	Sequence : a
	Date : 2018-08-20	

REGISTERED PROFESSIONAL ENGINEER J. TRUDEAU LICENSEE NT/NU

Marque	Quantité	Description	Longueur	Nuance	Finition	Poids	Poids total
Plate	1	PL1/2X96	1240.1	G40.21		12.6[lb]	12.6[lb]
M8041	1	HSS 42X42X4	1258.1	G40.21		5.8[lb]	11.7[lb]
M8040	1	HSS 42X42X4	1164.1	G40.21		5.4[lb]	5.4[lb]
M8042	1	HSS 42X42X4	1240.1	G40.21		5.7[lb]	5.7[lb]
M8048	1	HSS 42X42X4	1338.1	G40.21		6.2[lb]	6.2[lb]
P8106	1	PLT6/10X3/8	70.0	G40.21		1.1[lb]	1.1[lb]
P8105	1	PLT6/10X3/8	97.0	G40.21		1.5[lb]	3.0[lb]
M803	1	HSS 42X42X4	1240.1	G40.21		5.7[lb]	5.7[lb]
	10					43.5[lb]	45.6[lb]
	10						45.6[lb]

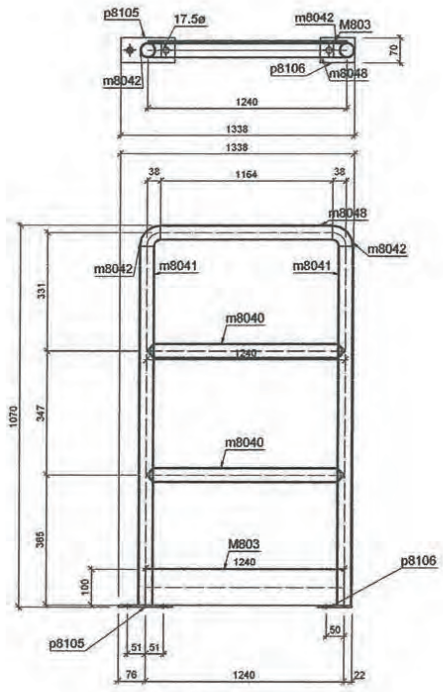

1 - M803 FL100X6

REGISTERED PROFESSIONAL ENGINEER
LICENSEE
NT/NU

Rev.	Date	Par	Description
a	2018-08-20		

Projet : Wastewater treatment plant
No. Projet : 0539-ST

Statut : Non défini	Commentaire :	
Détaillé par : Moise Harvey	Trou : 13/16"Ø u/n	Client : Nidik construction ltd
Vérifié par: Jean Trudeau	Soudure : E70XXELECT	No. Dessin : M803
STRUCTURES M.H. inc. ENTREPRENEUR GÉNÉRAL	Acier : G40.21	
	Peinture: Aucun	Sequence : a
	Date : 2018-08-20	

Marque	Quantité	Description	Longueur	Nuance	Finition	Poids	Poids total
D811	1	Conditionnement					
p8068	1	HS152x152x6.4	4165.1	G40.21M-350W	Couche de peinture	201.707	201.707
p8068	2	PL112.7x1.9x0.21.7	20.7	G40.21		12.373	12.373
p8062	4	PL112.7x88.8x152.4	152.4	G40.21		2.340	9.359
	2					295.806	295.806
	7						295.806

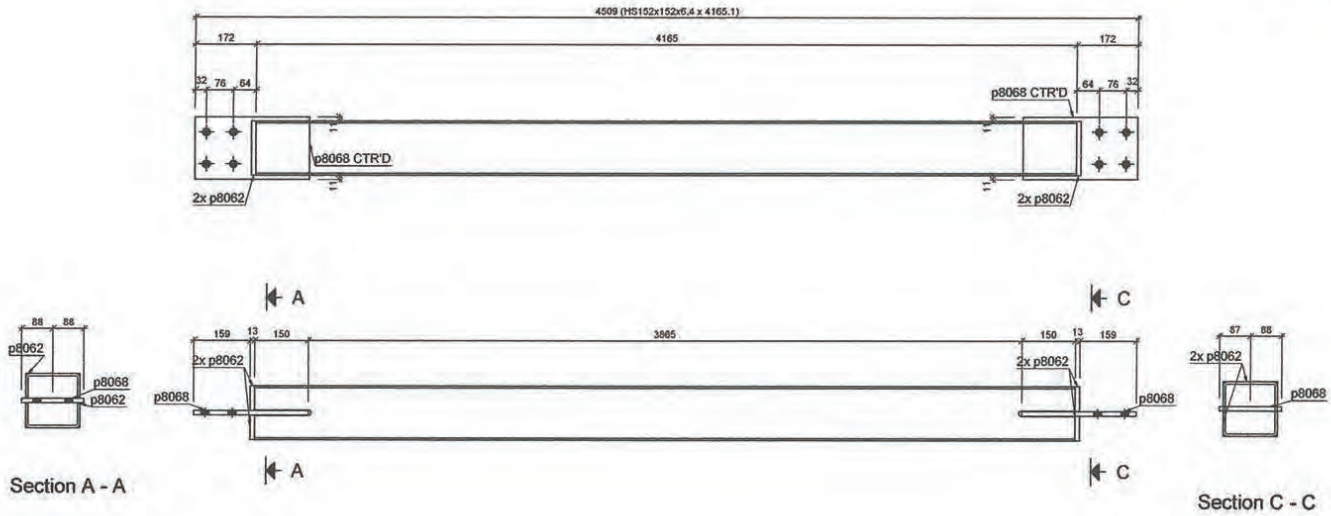

Section A - A

Section C - C

1 - D811 HS152x152x6.4
Grid reference (D/7)/(E/7)

6.3
Sauf indication contraire

REGISTERED PROFESSIONAL ENGINEER
J. TRUDEAU
LICENSEE
NT/NU

Rev.	Date	Par	Description
a	2018-08-20		

Projet : Wastewater treatment plant
No. Projet : 0839-ST

Statut : Non défini	Commentaire :	
Détaillé par : Moise Harvey	Trou : 13/16"Ø u/n	Client : Lisk construction ltd
Vérifié par: Jean Trudeau	Soudure : E70XXELECT	No. Dessin : D811
STRUCTURES M.H. Inc. ENTREPRENEUR GÉNÉRAL	Acier : G40.21M-350W	
	Peinture: 1 couche de peinture	Sequence : a
	Date : 2018-08-20	

Marque	Quantité	Description	Longueur	Aire/m²	Finition	Poids	Poids total
P8100	1	Contreventement					
p8068	1	HSS152x152x6.4	5535.1	G40.21M-350W	Couche de peinture	287.0[illegible]	287.0[illegible]
p8062	4	PLAT-PLATINE(ACIER)	257.21	G40.21		10.27[illegible]	10.27[illegible]
p8074	1	PLAT-PLATINE(ACIER)	209.21	G40.21		12.41[illegible]	12.41[illegible]
p8067	1	PLAT-PLATINE(ACIER)	151.41	G40.21		0.34[illegible]	0.34[illegible]
	7					287.[illegible]	309.[illegible]
	7						320.926

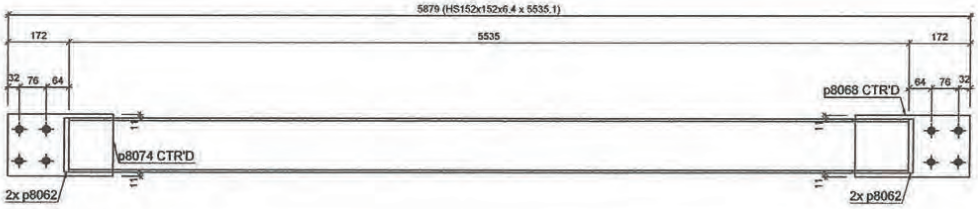

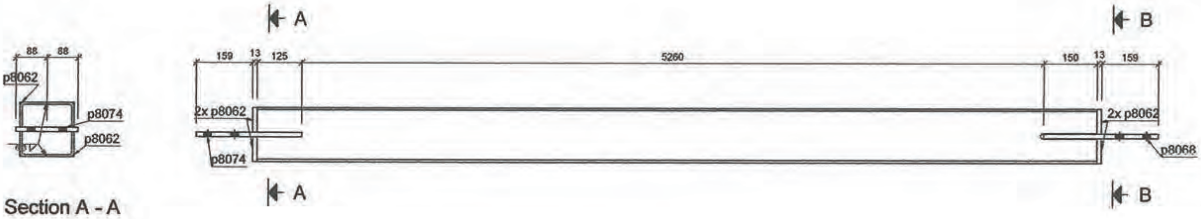

Section A - A

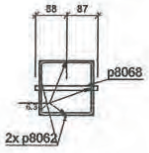

Section B - B

1 - D810 HS152x152x6.4
Grid reference (E/7)/(D/7)

6.3
Sauf indication contraire

Rev.	Date	Par	Description
a	2018-08-20		

Projet : Wastewater treatment plant
No. Projet : 0539-ST

Statut : Non défini	Commentaire :	
Détaillé par : Moise Harvey	Trou : 13/16"Ø u/n	Client: dk construction ltd
Vérifié par: Jean Trudeau	Soudure : E70XXELECT	No. Dessin : D810
STRUCTURES M.H. Inc. ENTREPRENEUR GÉNÉRAL	Acier : G40.21M-350W	
	Peinture: 1 couche de peinture	Sequence : a
	Date : 2018-08-20	

REGISTERED PROFESSIONAL ENGINEER
J. TRUDEAU
LICENSEE
NT/NU

Marque	Quantité	Description	Longueur	Nuance	Finition	Poids	Poids total
C809	1	Colonne/poteau					
p8039	1	PATTE/TIGE 4	3708.5	G40.21M-350W	Couche de peinture	231.630	231.630
p8040	1	PLAQUE/TÔLE 3/8	127.0	G40.21		17.930	17.930
p8068	4	BAT-EN-V/L1 1/2x3 1/2	152.7	G40.21		13.274	53.094
p8062	4	BAT-EN-V/L6x3 1/2x1/2	152.7	G40.21		9.388	37.554
	1					267.378	267.378
	1						267.378

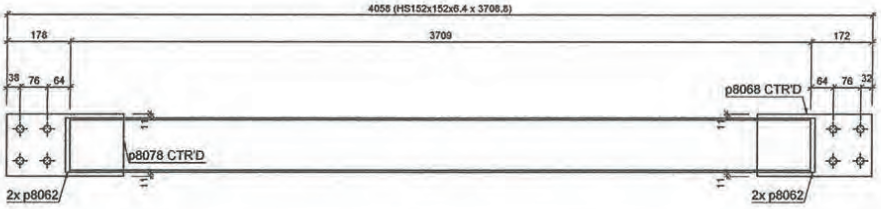

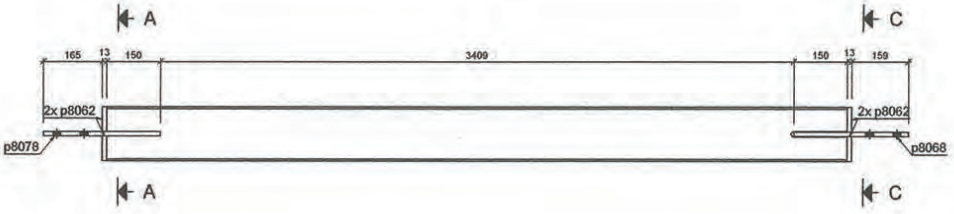

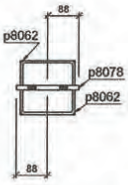

Section A - A

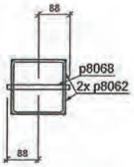

Section C - C

1- D809 HS152x152x6.4
Grid reference (7/D)/(1/D)

6.3
Sauf indication contraire

Rev.	Date	Par	Description
a	2018-08-20		

Projet : Wastewater treatment plant
No. Projet : 0839-ST

Statut : Non défini	Commentaire :	
Détaillé par : Moise Harvey	Trou : 13/16"Ø u/n	Client : Sik construction ltd
Vérifié par: Jean Trudeau	Soudure : E70XXELECT	No. Dessin : D809
STRUCTURES M.H. inc. ENTREPRENEUR GÉNÉRAL	Acier : G40.21M-350W	
	Peinture : 1 couche de peinture	Sequence : a
	Date : 2018-08-20	

REGISTERED PROFESSIONAL ENGINEER
J. TRUDEAU
LICENSEE
NT/NU

Marque	Quantité	Description	Longueur	Nuance	Finition	Poids	Poids total
p8068	1	HS152x152x6.4	4820.8	G40.21M-350W	Couche de peinture	302.290	302.290
p8062	1	PL12x127x292.1	301.7	G40.21		19.372	19.372
p8074	1	PL13x127x292.1	308.7	G40.21		11.431	11.431
p8062	4	PL12x127x292.1x12.4	312.4	G40.21		4.248	4.248
	2					336.043	336.043
	7						336.043

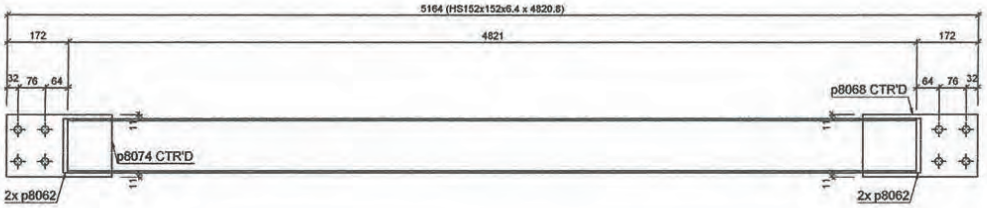

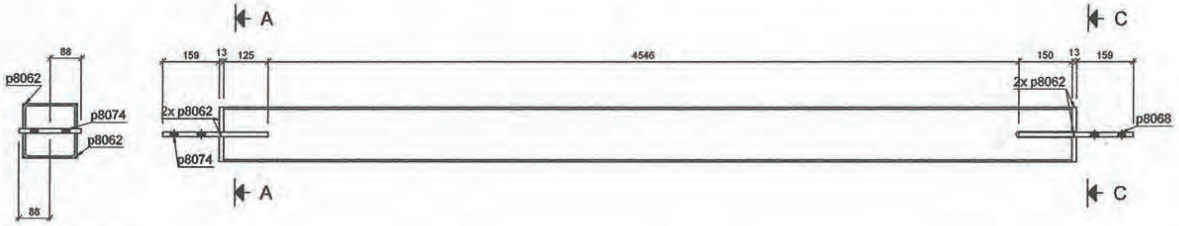

Section A - A

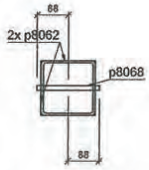

Section C - C

1- D808 HS152x152x6.4
Grid reference (1/D)/(7/D)

6.3
Sauf indication contraire

Rev.	Date	Par	Description
a	2018-08-20		

Projet : Wastewater treatment plant
No. Projet : 0839-ST

Statut : Non défini	Commentaire :	
Détaillé par : Moise Harvey	Trou : 13/16"Ø u/n	Client : Stik construction ltd
Vérifié par: Jean Trudeau	Soudure : E70XXELECT	No. Dessin : D808
STRUCTURES M.H. inc ENTREPRENEUR GÉNÉRAL	Acier : G40.21M-350W	
	Peinture : 1 couche de peinture	Sequence : a
	Date : 2018-08-20	

REGISTERED PROFESSIONAL ENGINEER
J. TRUDEAU
LICENSEE
NT/NU

Marque	Quantité	Description	Longueur	Nuance	Finition	Poids	Poids total
		Poutre principale					
p8078	1	HP8X36(D807)G40.21	3707.9	G40.21M-350W	Couche de peinture	274.5747	274.5747
p8062	4	PLAT-PL(D807)G40.21	300.0	G40.21		14.0614	56.2456
p8068	4	PLAT-PL(D807)G40.21	300.0	G40.21		14.0614	56.2456
p8062	2	PLAT-PL(D807)G40.21	300.0	G40.21		14.0614	28.1228
	11					317.318	397.3146

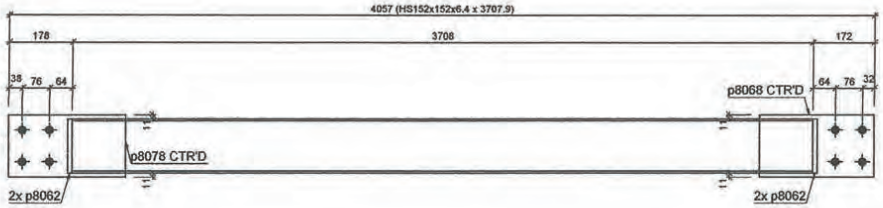

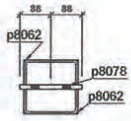

Section A - A

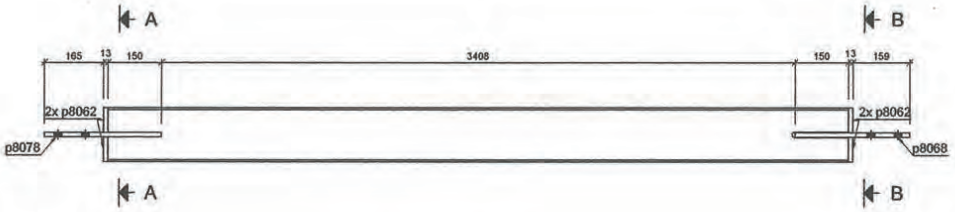

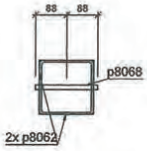

Section B - B

1- D807 HS152x152x6.4
Grid reference (7/E)/(1/E)

REGISTERED PROFESSIONAL ENGINEER
J.TRUDEAU
LICENSEE
NT/NU

Rev.	Date	Par	Description
a	2018-08-20		

Projet : Wastewater treatment plant
No. Projet : 0539-ST

Statut : Non défini	Commentaire :	
Détaillé par : Moise Harvey	Trou : 13/16"Ø u/n	Client : Atik construction ltd
Vérifié par: Jean Trudeau	Soudure : E70XXELECT	No. Dessin : D807
STRUCTURES M.H. inc. ENTREPRENEUR GÉNÉRAL	Acier : G40.21M-350W	
	Peinture : 1 couche de peinture	Sequence : a
	Date : 2018-08-20	

Marque	Quantité	Description	Longueur	Nuance	Fonction	Poids	Poids total
[illegible]	1	Commentaires					
[illegible]	1	[illegible]	[illegible]	[illegible]		[illegible]	[illegible]
[illegible]	1	[illegible]	[illegible]	[illegible]		[illegible]	[illegible]
[illegible]	1	[illegible]	[illegible]	[illegible]		[illegible]	[illegible]
[illegible]	2	[illegible]	[illegible]	[illegible]		[illegible]	[illegible]
	7						[illegible]

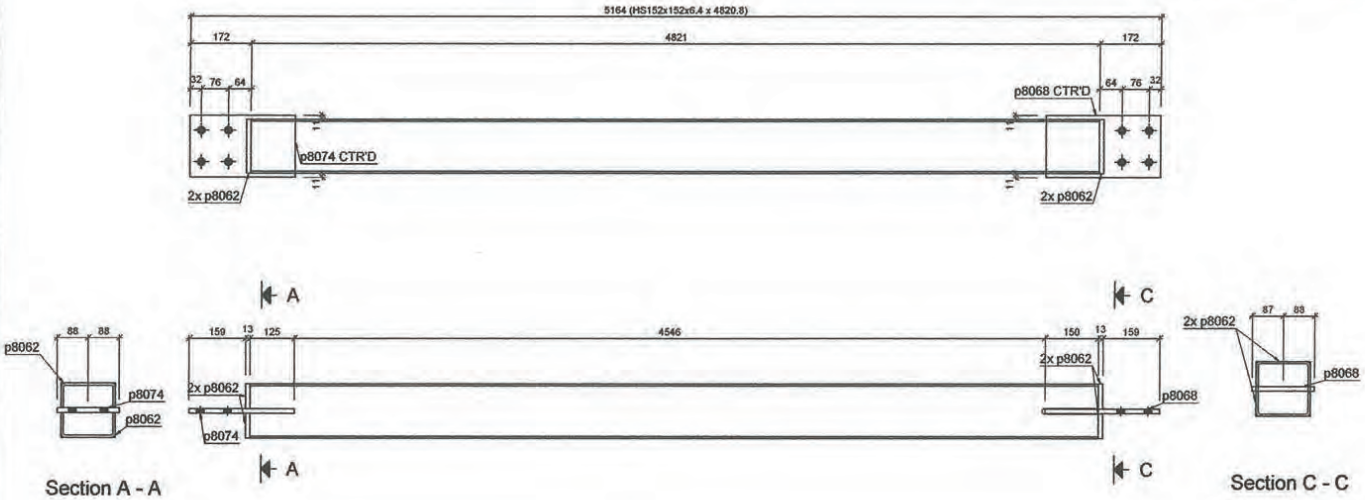

1 - D806 HS152x152x6.4
Grid reference (1/E)/(7/E)

6.3
Sauf indication contraire

REGISTERED PROFESSIONAL ENGINEER
J. TRUDEAU
LICENSEE
NT/NU

Rev.	Date	Par	Description
a	2018-08-20		

Projet : Wastewater treatment plant
No. Projet : 0839-ST

Statut : Non défini	Commentaire :	
Détaillé par : Moise Harvey	Trou : 13/16"Ø u/n	Client : [illegible] construction ltd
Vérifié par: Jean Trudeau	Soudure : E70XXELECT	No. Dessin : D806
STRUCTURES M.H. inc. ENTREPRENEUR GÉNÉRAL	Acier : G40.21M-350W	
	Peinture: 1 couche de peinture	Sequence : a
	Date : 2018-08-20	

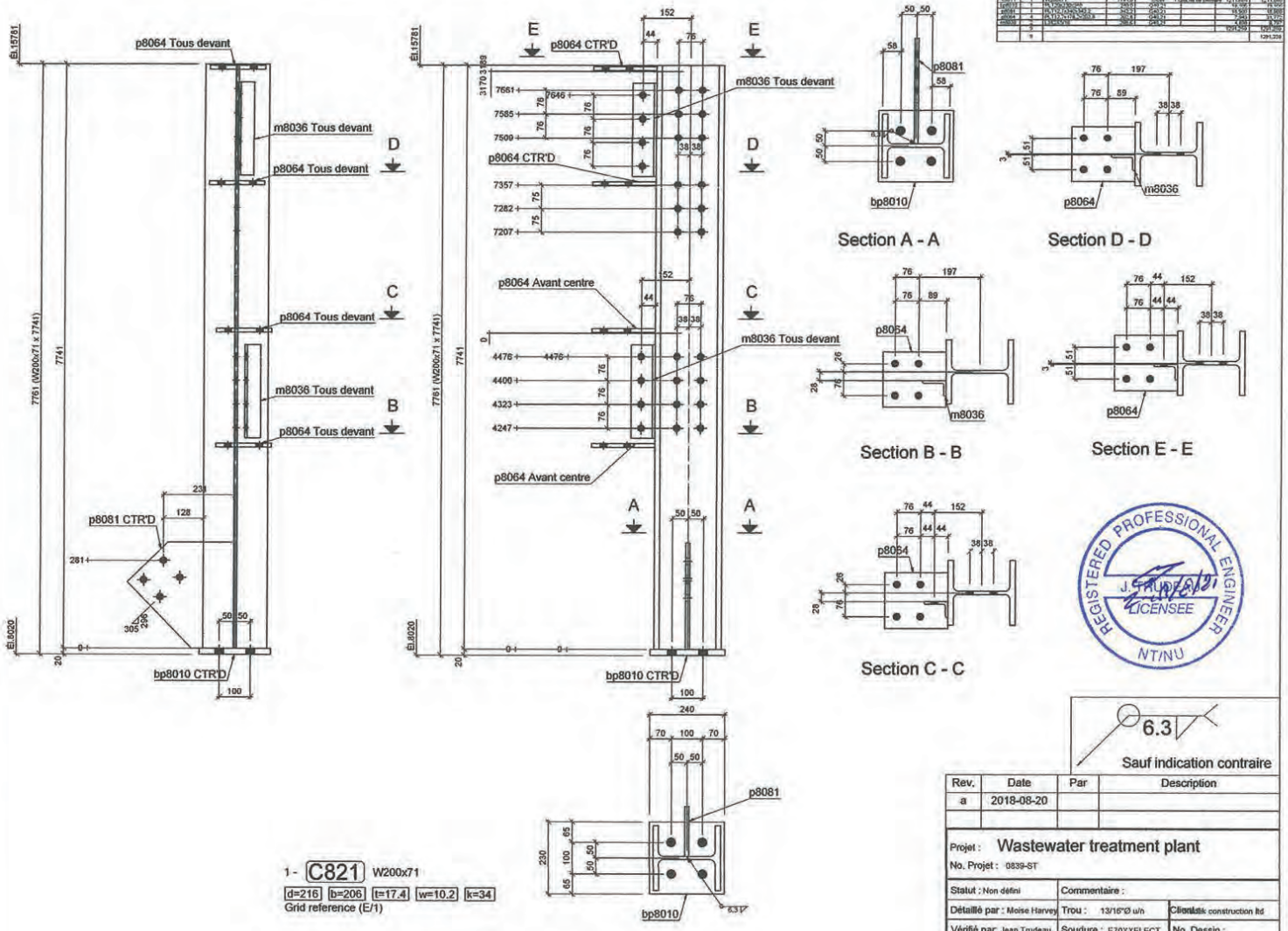

1 - C821 W200x71

d=216 | b=206 | t=17.4 | w=10.2 | k=34

Grid reference (E/1)

6.3

Sauf indication contraire

Rev.	Date	Par	Description
a	2018-08-20		

Projet : Wastewater treatment plant

No. Projet : 0839-ST

Statut : Non défini	Commentaire :	
Détaillé par : Moise Harvey	Trou : 13/16"Ø u/n	Client : Atik construction ltd
Vérifié par: Jean Trudeau	Soudure : E70XXELECT	No. Dessin : C821
	Acier : 350W	
	Peinture: 1 couche de peinture	Sequence : a
	Date : 2018-08-20	

STRUCTURES M.H. inc.

REGISTERED PROFESSIONAL ENGINEER J. TRUDEAU LICENSEE NT/NU

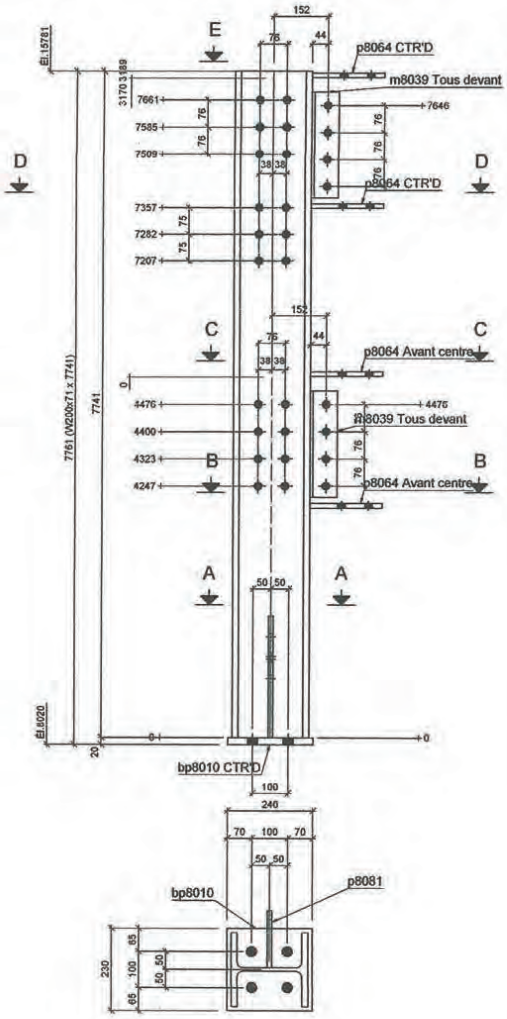

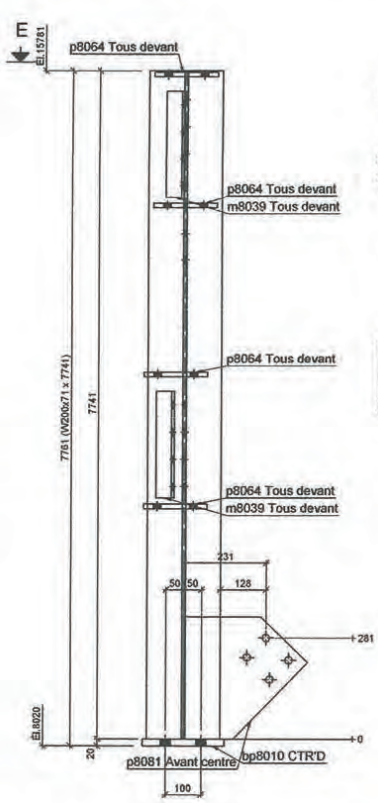

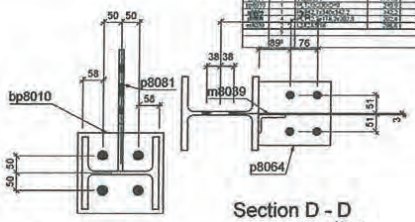

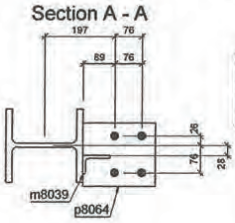

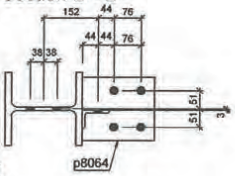

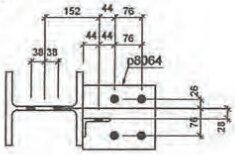

Marque	Quantité	Description	Longueur	Finition	Poids	Poids total
C820	1	W200x71	7741 [6]	PEINT	1 pouce de peinture	1411.000
p8064	1	PL10"x20"x20mm	20[0]	G40.21		16.100
m8039	2	PL6"x12"x45x45x7	24[0]	G40.21		16.800
p8081	4	PL6"x12"x13.5x30.5	26[0]	G40.21		21.200
bp8010	2	PL10"x14"x6"	16[0]	G40.21		8.200
	5				1 pouce de peinture	1291.200

REGISTERED PROFESSIONAL ENGINEER
J. E. PUDEAU
LICENSEE
NT/NU

1 - C820 W200x71

d=216 | b=206 | t=17.4 | w=10.2 | k=34

Grid reference (D/1)

6.3

Sauf indication contraire

Rev.	Date	Par	Description
a	2018-08-20		

Projet : Wastewater treatment plant

No. Projet : 0839-ST

Statut : Non défini	Commentaire :	
Détaillé par : Moise Harvey	Trou : 13/16"Ø u/n	Client : Kitaskik construction ltd
Vérifié par: Jean Trudeau	Soudure : E70XXELECT	No. Dessin : C820
STRUCTURES M.H. inc. ENTREPRENEUR GÉNÉRAL	Acier : 350W	
	Peinture: 1 couche de peinture	Sequence : a
	Date : 2018-08-20	

Marque	Quantité	Description	Longueur	Finance	Finition	Poids	Poids total
C819	1	Pièces					
p8056	1	HS76x76x4.8	1427.0	G40.21M-350W		32.404	32.404
bp8007	1	PL110x110 2x180.2	180.2	G40.21		6.747	6.747
p8008	1	PL110x110x164.7	164.7	G40.21		2.829	2.829
	1					42.977	42.977
	2						42.977

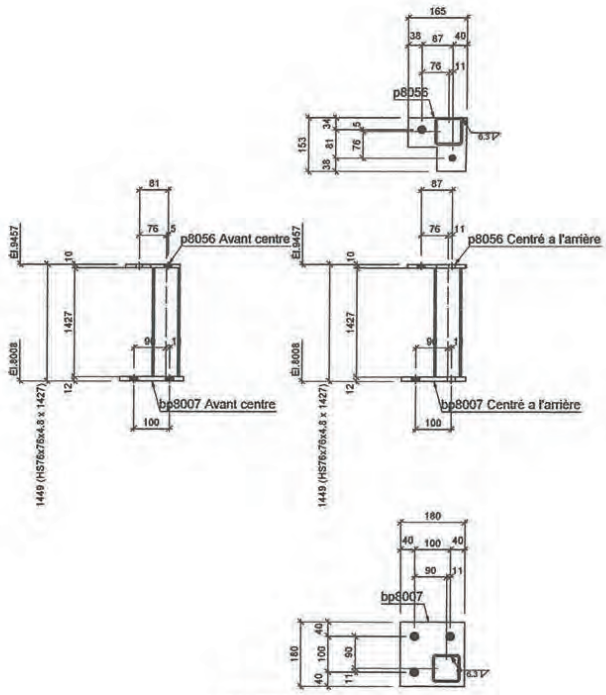

1 - C819 HS76x76x4.8

d=76.2 b=76.2 t=4.8 w=4.8 k=

Grid reference (7/)

REGISTERED PROFESSIONAL ENGINEER
J. TRUDEAU
LICENSEE
NT/NU

Rev.	Date	Par	Description
a	2018-08-20		

Projet : **Wastewater treatment plant**

No. Projet : 0839-ST

Statut : Non défini	Commentaire :	
Détaillé par : Moise Harvey	Trou : 13/16"Ø u/h	Client : Kiak construction ltd
Vérifié par: Jean Trudeau	Soudure : E70XXELECT	No. Dessin : C819
STRUCTURES M.H. inc. ENTREPRENEUR GÉNÉRAL	Acier : G40.21M-350W	
	Peinture: Aucun	Sequence : a
	Date : 2018-08-20	

Marque	Quantité	Description	Longueur	Nuance	Finition	Poids	Poids total
C818	1	Plaque					
C818	1	HS76x76x4.8	1427.0	G40.21M-350W		22.404	22.404
bp8007	1	PLT12x100x100x2	100.0	G40.21		6.744	6.744
	2					39.147	39.147
	2						39.147

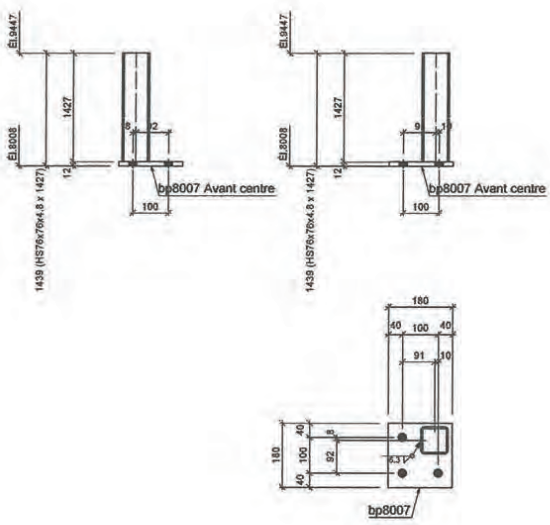

1 - C818 HS76x76x4.8

d=76.2 b=76.2 t=4.8 w=4.8 k=

Grid reference (/)

REGISTERED PROFESSIONAL ENGINEER
J. TRUDEAU
LICENSEE
NT/NU

6.3

Sauf indication contraire

Rev.	Date	Par	Description
a	2018-08-20		

Projet : **Wastewater treatment plant**

No. Projet : 0839-ST

Statut : Non défini	Commentaire :	
Détaillé par : Moise Harvey	Trou : 13/16"Ø u/n	Client : dk construction ltd
Vérifié par: Jean Trudeau	Soudure : E70XXELECT	No. Dessin : C818
STRUCTURES M.H. inc. ENTREPRENEUR GÉNÉRAL	Acier : G40.21M-350W	
	Peinture: Aucun	Sequence : a
	Date : 2018-08-20	

Marque	Quantité	Description	Longueur	Nuance	Finition	Poids	Poids total
C817	1	Pilotage					
p8088	1	HS76x76x4.8	2645	G40.21M-350W		60.001	60.001
bp8007	1	PLT10/180x180	180	G40.21		9.727	9.727
p8088	1	PLT10/77x181	1650	G40.21		2.436	2.436
	3					69.231	69.231
	1						69.231

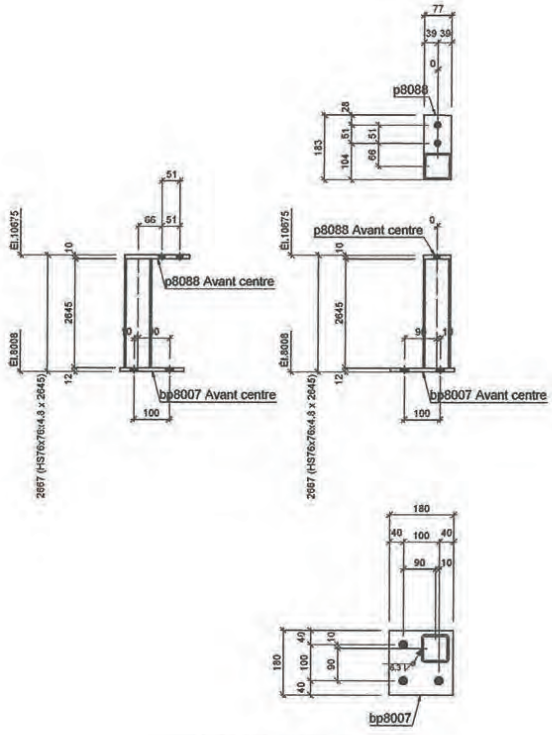

1 - C817 HS76x76x4.8

d=76.2 b=76.2 t=4.8 w=4.8 k=

Grid reference (/)

REGISTERED PROFESSIONAL ENGINEER
J. TRUDEAU
LICENSEE
25/8/2018
NT/NU

6.3

Sauf indication contraire

Rev.	Date	Par	Description
a	2018-08-20		

Projet : **Wastewater treatment plant**

No. Projet : 0839-ST

Statut : Non défini	Commentaire :	
Détaillé par : Moise Harvey	Trou : 13/16"Ø u/n	Client : Stik construction ltd
Vérifié par: Jean Trudeau	Soudure : E70XXELECT	No. Dessin : C817
STRUCTURES M.H. inc. ENTREPRENEUR GÉNÉRAL	Acier : G40.21M-350W	
	Peinture: Aucun	Sequence : a
	Date : 2018-08-20	

Quantité	Description	Longueur	Finition
1	HS76x76x4.8	2	
2	HS76x76x4.8	1	

Marque	Quantité	Description	Longueur	Nuance	Finition	Poids	Poids total
C816	1	HS76x76x4.8	2645.0	G40.21M-350W		50.00	50.00
p8087	1	PLY(5/16)x5/16	1813	G40.21		4.24	4.24
p8087	1	PLY(5/16)x5/16	1813	G40.21		4.24	4.24
	3					58.51	58.51
	3						58.51

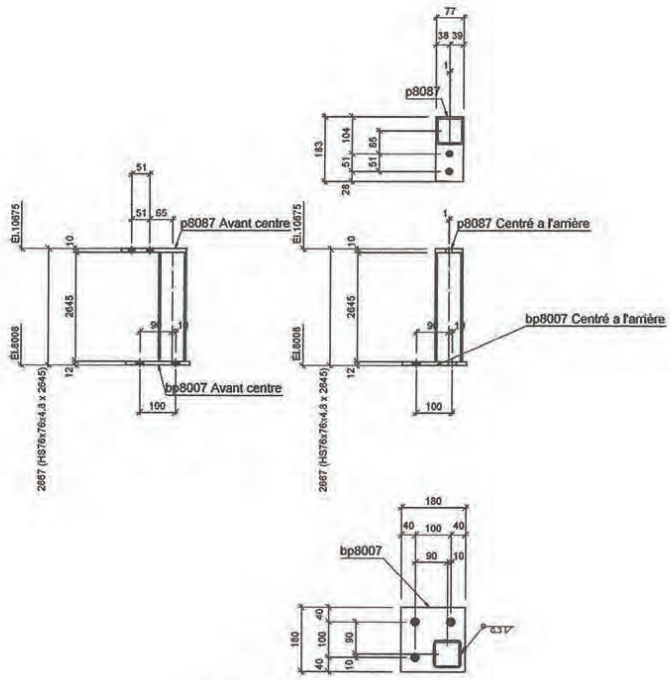

1 - C816 HS76x76x4.8

d=76.2 b=76.2 t=4.8 w=4.8 k=

Grid reference (/)

REGISTERED PROFESSIONAL ENGINEER
J. TRUDEAU
LICENSEE
NT/NU

6.3

Sauf indication contraire

Rev.	Date	Par	Description
a	2018-08-20		

Projet : **Wastewater treatment plant**

No. Projet : 0839-ST

Statut : Non défini	Commentaire :	
Détaillé par : Moise Harvey	Trou : 13/16"Ø u/n	Client: Klik construction ltd
Vérifié par: Jean Trudeau	Soudure : E70XXELECT	No. Dessin : C816
STRUCTURES M.H. inc. ENTREPRENEUR GÉNÉRAL	Acier : G40.21M-350W	
	Peinture: Aucun	Sequence : a
	Date : 2018-08-20	

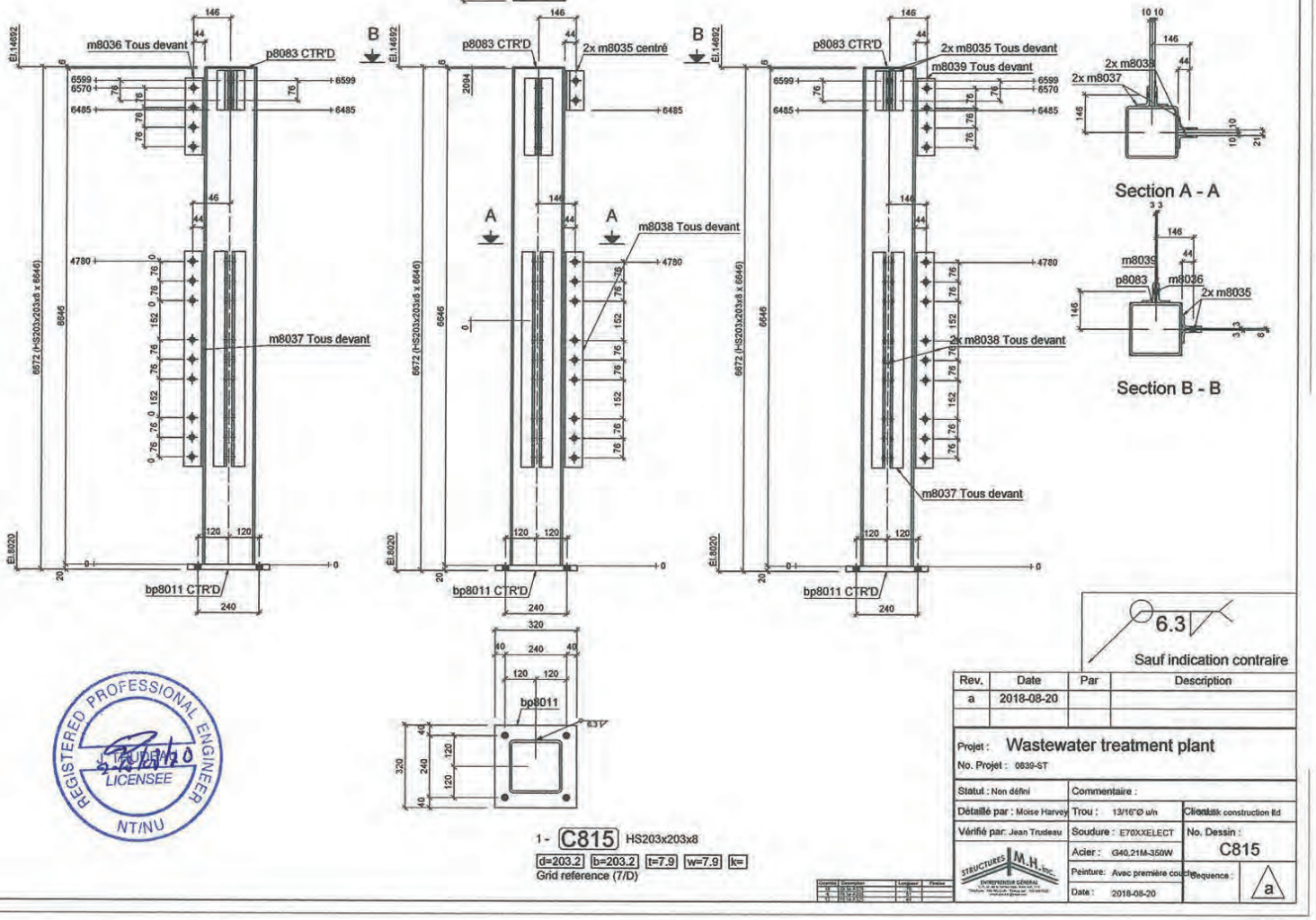

6.3

Sauf indication contraire

Rev.	Date	Par	Description
a	2018-08-20		

Projet : Wastewater treatment plant

No. Projet : 0839-ST

Statut : Non défini	Commentaire :	
Détaillé par : Moise Harvey	Trou : 13/16"Ø u/n	Client : Mk construction ltd
Vérifié par: Jean Trudeau	Soudure : E70XXELECT	No. Dessin : C815
	Acier : G40.21M-350W	
	Peinture : Avec première couche	Sequence : a
	Date : 2018-08-20	

STRUCTURES M.H. inc. ENTREPRENEUR GÉNÉRAL

REGISTERED PROFESSIONAL ENGINEER
JEAN TRUDEAU
2018-08-20
LICENSEE
NT/NU

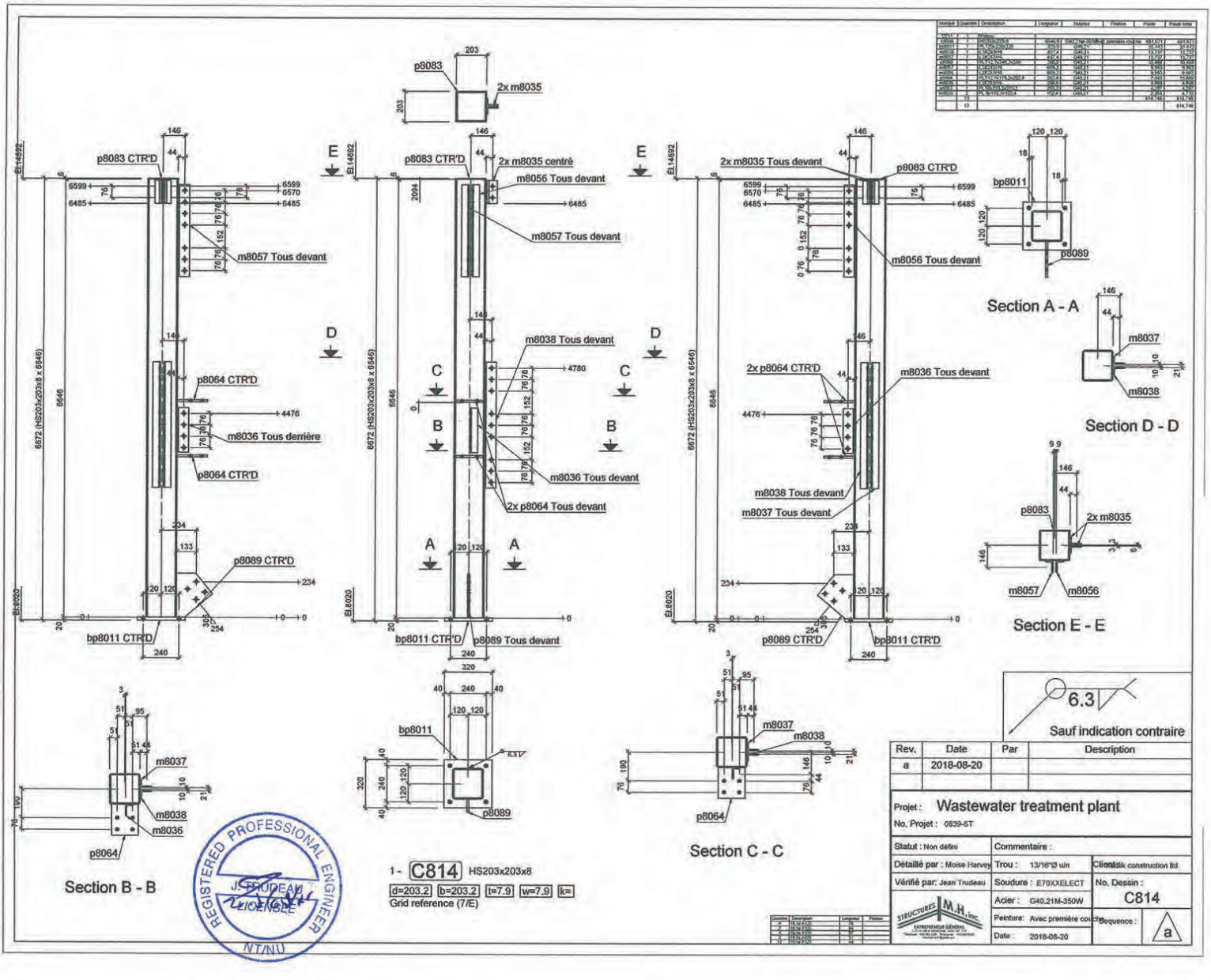

Rev.	Date	Par	Description
a	2018-08-20		

Projet : Wastewater treatment plant

No. Projet : 0839-ST

Statut : Non défini	Commentaire :	
Détaillé par : Moise Harvey	Trou : 13/16"Ø u/n	Client : Klik construction ltd
Vérifié par: Jean Trudeau	Soudure : E70XXELECT	No. Dessin : C814
STRUCTURES M.H. inc. ENTREPRENEUR GÉNÉRAL	Acier : G40.21M-350W	
	Peinture: Avec première couche	Séquence : a
	Date : 2018-08-20	

Marque	Quantité	Description	Longueur	Nuance	Finition	Poids	Poids total
C813	1	Colonne					
p8066	1	PLAT(S) DE 25	6846.7	G40.21M-350W	Couche de peinture	824.4 lbs	824.4 lbs
p8066	1	PLAT(S) DE 25	305.0	G40.21		17.9 lbs	17.9 lbs
p8072	1	PLAT(S) DE 25	304.0	G40.21		53.0 lbs	53.0 lbs
p8066	1	PLAT(S) DE 25	508.0	G40.21		6.1 lbs	6.1 lbs
	5					900.3 lbs	900.3 lbs
	5						900.3 lbs

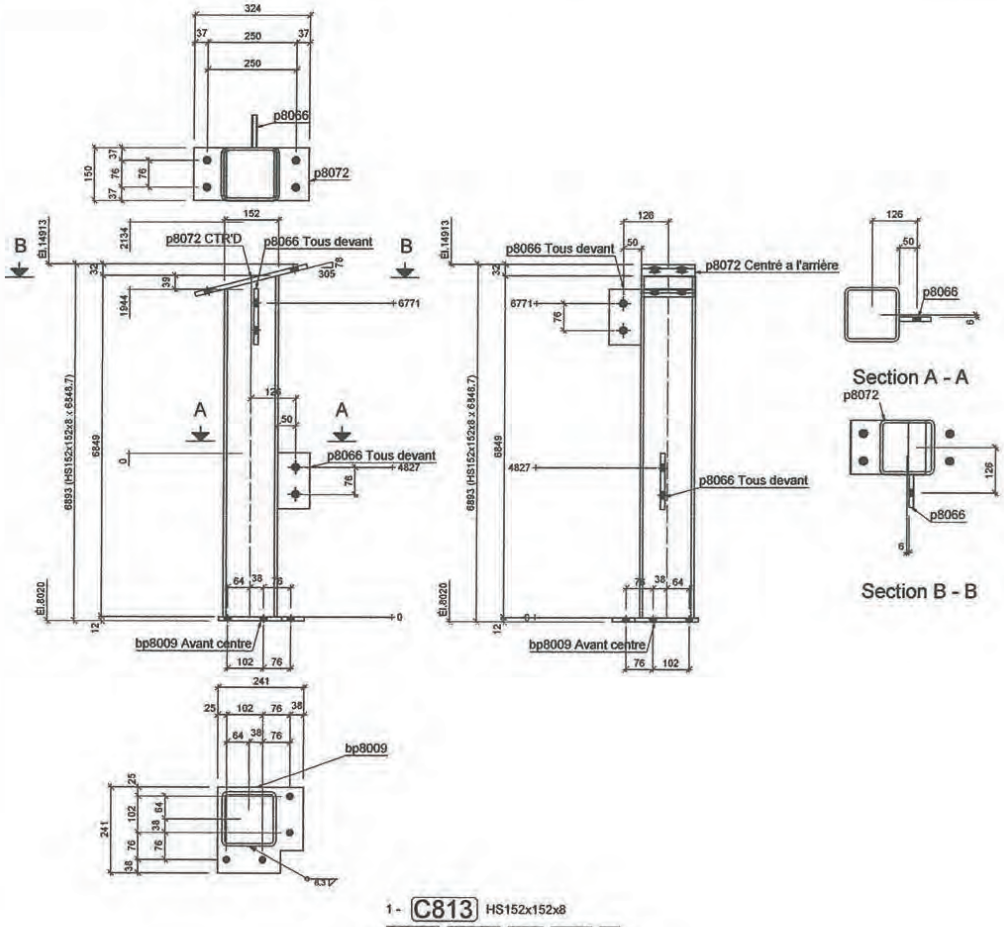

1 - C813 HS152x152x8

d=152.4 | b=152.4 | t=7.9 | w=7.9 | k=

Grid reference (/)

REGISTERED PROFESSIONAL ENGINEER
J. TEUDEAU
LICENSEE
NT/NU

6.3

Sauf indication contraire

Rev.	Date	Par	Description
a	2018-08-20		

Projet : Wastewater treatment plant

No. Projet : 0839-ST

Statut : Non défini	Commentaire :	
Détaillé par : Moise Harvey	Trou : 13/16"Ø u/n	Client : dk construction ltd
Vérifié par: Jean Trudeau	Soudure : E70XXELECT	No. Dessin : C813
STRUCTURES M.H. Inc. ENTREPRENEUR GÉNÉRAL	Acier : G40.21M-350W	
	Peinture : 1 couche de peinture	Sequence : a
	Date : 2018-08-20	

Quantité	Description	Longueur	Finition
1	C813 HS152	20'	

Marque	Quantité	Description	Longueur	Nuance	Finition	Poids	Poids total
C812	1	HS152x152x8	6848.7	G40.21M-350W		824.2 kg	824.2 kg
p8066	1	PLT 6"x1"(152x25)-L3	301.3	G40.21		11.9 kg	11.9 kg
p8072	1	PLT 6"x1"(152x25)-L4	324.6	G40.21		13.0 kg	13.0 kg
p8009	1	PLT 9"x1"(229x25)	356.8	G40.21		17.6 kg	17.6 kg
	3					866.7 kg	866.7 kg
	0						866.7 kg

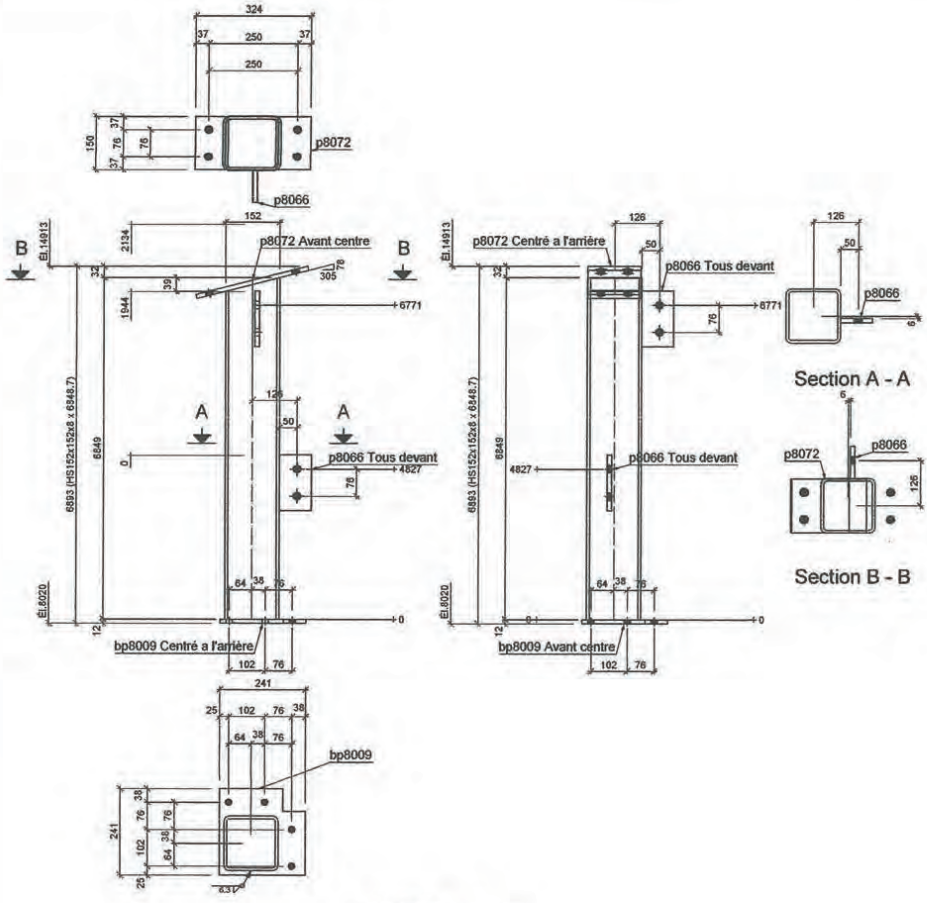

1- C812 HS152x152x8

d=152.4 b=152.4 t=7.9 w=7.9 k=

Grid reference (/)

REGISTERED PROFESSIONAL ENGINEER
TRUDEAU
LICENSEE
NT/NU

6.3

Sauf indication contraire

Rev.	Date	Par	Description
a	2018-08-20		

Projet : Wastewater treatment plant

No. Projet : 0839-ST

Statut : Non défini	Commentaire :	
Détaillé par : Moise Harvey	Trou : 13/16"Ø u/h	Client : tik construction ltd
Vérifié par: Jean Trudeau	Soudure : E70XXELECT	No. Dessin : C812
STRUCTURES M.H. inc ENTREPRENEUR GÉNÉRAL	Acier : G40.21M-350W	
	Peinture: 1 couche de peinture	Sequence : a
	Date : 2018-08-20	

Marque	Quantité	Description	Longueur	Nuance	Finition	Poids	Poids total
C810	1	HS152x152x8					
p8066	1	PLT10x178x305	305.01	G40.21		5.01	5.01
p8072	1	PLT10x150x324	324.01	G40.21		5.321	5.321
p8062	1	PLT12x126x178	178.01	G40.21		2.991	2.991
p8066	4	PLT12x126x178	178.01	G40.21		2.991	11.964
p8066	4	PLT12x126x178	178.01	G40.21		2.991	11.964
	8					580.171	580.171
	8						580.103

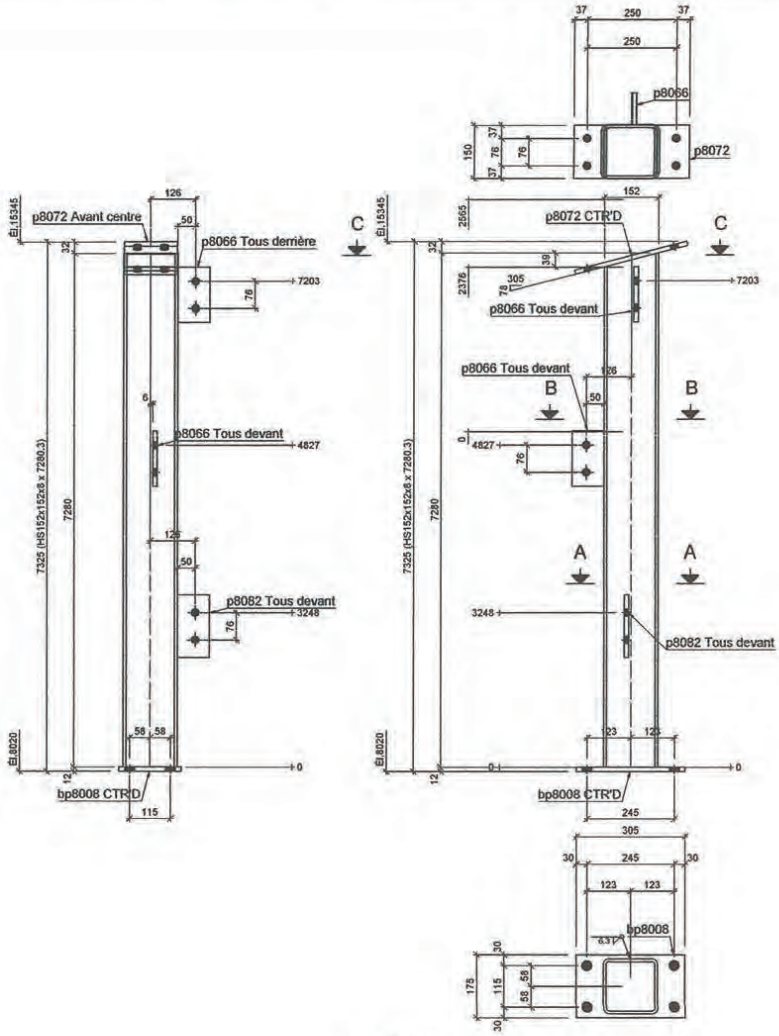

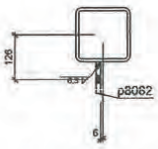

Section A - A

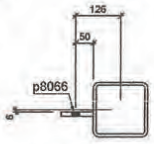

Section B - B

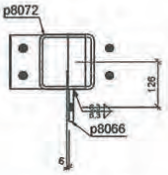

Section C - C

REGISTERED PROFESSIONAL ENGINEER
J. TRUDEAU
LICENSEE
NT/NU

1 - C810 HS152x152x8

d=152.4 b=152.4 t=7.9 w=7.9 k=

Grid reference (/)

6.3

Sauf indication contraire

Rev.	Date	Par	Description
a	2018-08-20		

Projet : Wastewater treatment plant

No. Projet : 0839-ST

Statut : Non défini	Commentaire :	
Détaillé par : Moise Harvey	Trou : 13/16"Ø u/n	Client : Tk construction ltd
Vérifié par: Jean Trudeau	Soudure : E70XXELECT	No. Dessin : C810
STRUCTURES M.H. inc. ENTREPRENEUR GÉNÉRAL	Acier : G40.21M-350W	
	Peinture: 1 couche de peinture	Sequence : a
	Date : 2018-08-20	

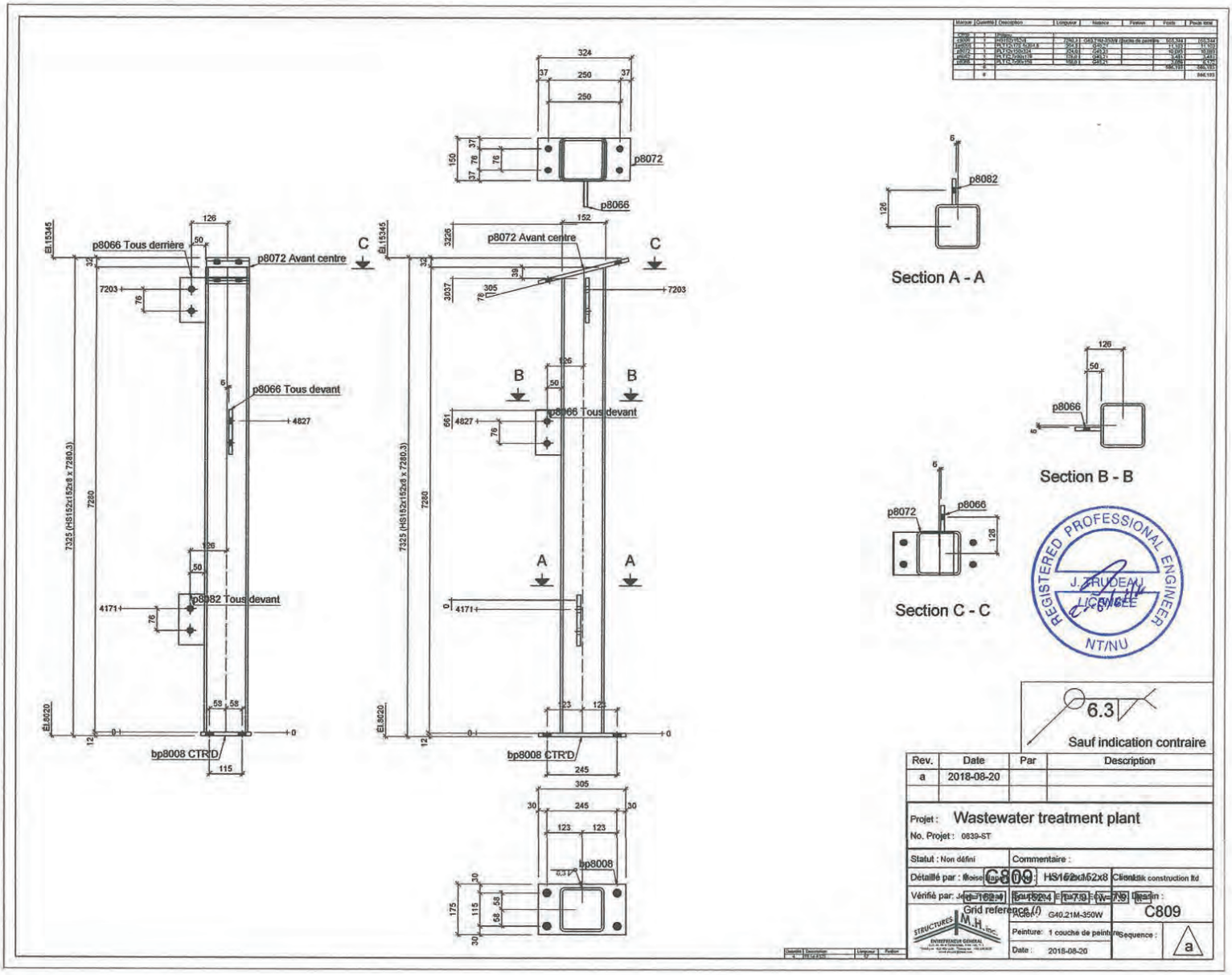

p8066 Tous derrière
p8072 Avant centre
p8066 Tous devant
p8082 Tous devant
bp8008 CTR'D
p8072
p8066
bp8008
Section A - A
Section B - B
Section C - C
REGISTERED PROFESSIONAL ENGINEER
J. TRUDEAU
LICENSEE
NT/NU
Sauf indication contraire
Rev.
Date
Par
Description
a
2018-08-20
Projet : Wastewater treatment plant
No. Projet : 0839-ST
Statut : Non défini
Commentaire :
Détaillé par :
Vérifié par:
Grid reference (/)
Acier : G40.21M-350W
Peinture: 1 couche de peinture
Date : 2018-08-20
Sequence :
C809
HS152x152x8
Client: Klik construction ltd
Dessin :
C809
a

Marque	Quantité	Description	Longueur	Finance	Finition	Poids	Poids total
B821	1						
B821	1	W360x45	5058.6	350W	1 couche de peinture	501.904	501.904
	1					501.904	501.904
	1						501.904

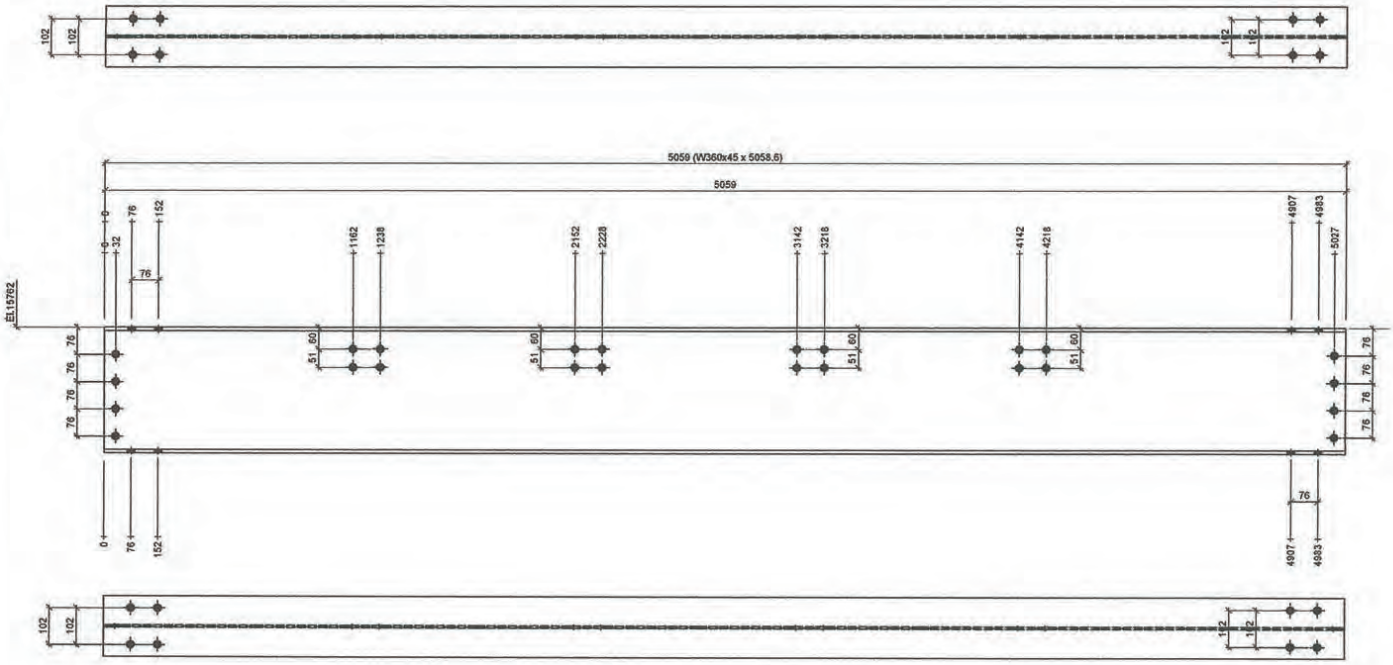

1 - B821 W360x45

d=352 b=171 t=9.8 w=6.9 k=27

Grid reference (D/1)/(E/1)

REGISTERED PROFESSIONAL ENGINEER
J. TRUDEAU
LICENSEE
NT/NU

Rev.	Date	Par	Description
a	2018-08-20		

Projet : **Wastewater treatment plant**

No. Projet : 0839-ST

Statut : Non défini	Commentaire :	
Détaillé par : Moise Harvey	Trou : 13/16"Ø u/n	Client : Klik construction ltd
Vérifié par: Jean Trudeau	Soudure : E70XXELECT	No. Dessin : B821
STRUCTURES M.H. inc. ENTREPRENEUR GÉNÉRAL	Acier : 350W	
	Peinture: 1 couche de peinture	Sequence : a
	Date : 2018-08-20	

Marque	Quantité	Description	Longueur	Nuance	Fixation	Poids	Poids total
B820	1	W360x45	5071.4	350W	1 couche de peinture	503.121	503.121
p8094	1	PLT12.7x300x4x5.5	455.8	G40.21		30.632	30.632
	2					533.755	533.755
	2						533.755

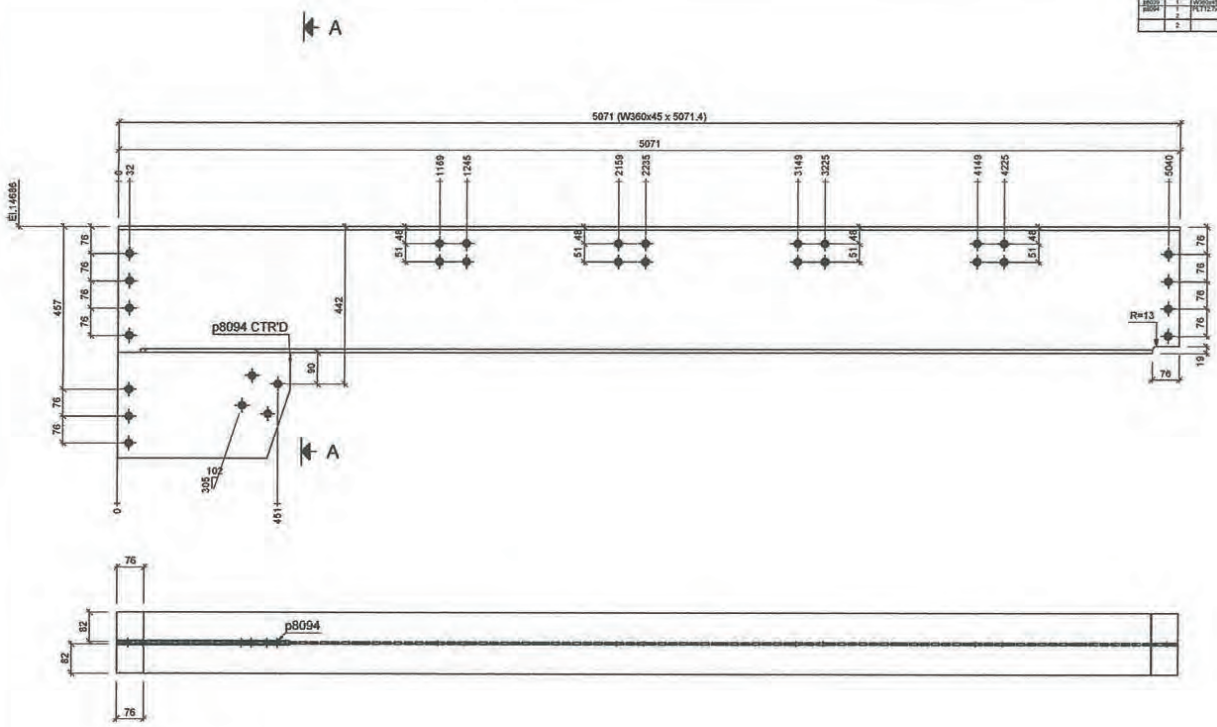

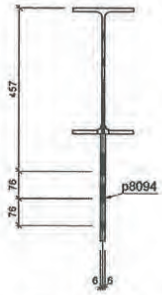

Section A - A

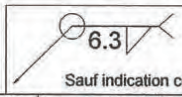

Sauf indication contraire

Rev.	Date	Par	Description
a	2018-08-20		

Projet : **Wastewater treatment plant**

No. Projet : 0839-ST

Statut : Non défini	Commentaire :	
Détaillé par : Morse Harvey	Trou : 13/16"Ø u/m	Client : Klik construction ltd
Vérifié par: Jean Trudeau	Soudure : E70XXELECT	No. Dessin : B820
STRUCTURES M.H. inc.	Acier : 350W	
	Peinture: 1 couche de peinture	Sequence : a
	Date : 2018-08-20	

REGISTERED PROFESSIONAL ENGINEER
J. TRUDEAU
LICENSEE
NT/NU

1 - B820 W360x45

d=352 | b=171 | t=9.8 | w=6.9 | k=27

Grid reference (D/7)/(E/7)

Marque	Quantité	Description	Longueur	Nuance	Finition	Poids	Poids total
B819	1	Plaque					
B5040	1	W360x45	5058.6	350W	Avec première couche	001.804	001.804
						001.804	001.804
	1						001.804

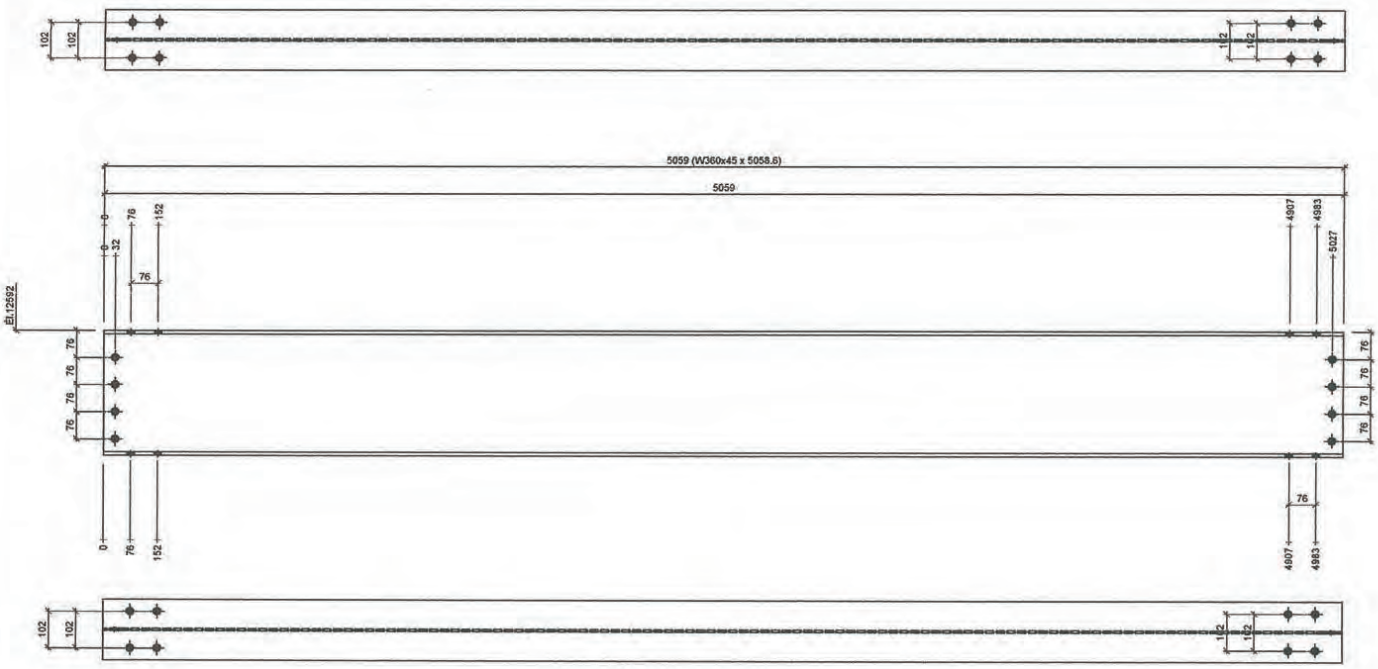

1 - B819 W360x45

d=352 b=171 t=9.8 w=6.9 k=27

Grid reference (D/1)/(E/1)

REGISTERED PROFESSIONAL ENGINEER
J. TRUDEAU
LICENSEE
NT/NU

Rev.	Date	Par	Description
a	2018-08-20		

Projet : **Wastewater treatment plant**

No. Projet : 0839-ST

Statut : Non défini	Commentaire :	
Détaillé par : Moise Harvey	Trou : 13/16"Ø u/n	Client : Klik construction ltd
Vérifié par: Jean Trudeau	Soudure : E70XXELECT	No. Dessin : B819
STRUCTURES M.H. inc. ENTREPRENEUR GÉNÉRAL	Acier : 350W	
	Peinture: Avec première couche	Séquence : a
	Date : 2018-08-20	

Marque	Quantité	Description	Longueur	Nuance	Finition	Poids	Poids total
B818	1	PROFILS					
p8093	1	L8X8X1/2	4169.61	350W	Avec première couche de peinture	413.7477	413.7477
p8080	1	PL11X1/2X305X340	746.61	G40.21		20.1237	20.1237
p8076	1	PL11X1/2X305X340	340.61	G40.21		16.4331	16.4331
p8078	1	PL11X1/2X305X4.5	104.61	G40.21		7.3853	7.3853
	4					456.8813	456.8813
	4						456.883

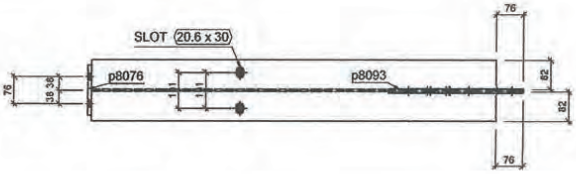

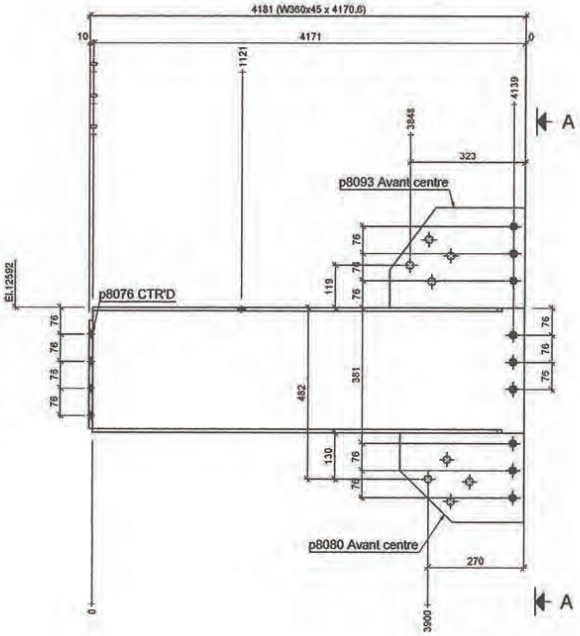

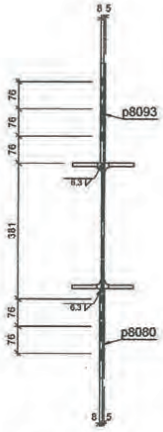

Section A - A

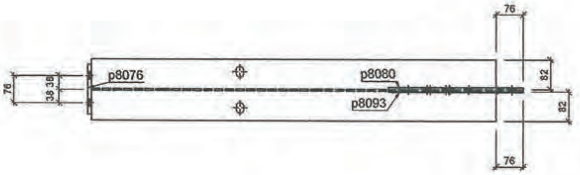

1 - B818 W360x45

d=352 b=171 t=9.8 w=6.9 k=27

Grid reference (7/D)/(1/D)

REGISTERED PROFESSIONAL ENGINEER
J. TRUDEAU
LICENSEE
NT/NU

6.3

Sauf indication contraire

Rev.	Date	Par	Description
a	2018-08-20		

Projet : Wastewater treatment plant

No. Projet : 0639-ST

Statut : Non défini	Commentaire :	
Détaillé par : Moise Harvey	Trou : 13/16"Ø u/n	Client : tk construction ltd
Vérifié par: Jean Trudeau	Soudure : E70XXELECT	No. Dessin : B818
STRUCTURES M.H. Inc. ENTREPRENEUR GÉNÉRAL	Acier : 350W	
	Peinture: Avec première couche	Sequence : a
	Date : 2018-08-20	

Marque	Quantité	Description	Longueur	Nuance	Finition	Poids	Poids total
B817	1	Poutre					
B817	1	W360x45	5071.4	350W	Avec première couche	503.1/1	503.1/1
p8090	1	PLT1/2 (1/2)x(1/2)x5	295.5	(14)/21		20.5/21	20.5/21
p8091	1	PLT1/2 (1/2)x(1/2)x5	295.5	(14)/21		16.0/21	16.0/21
						540.3/4	540.3/4
	3						540.3/4

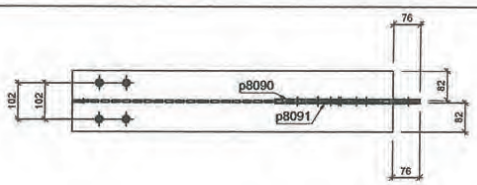

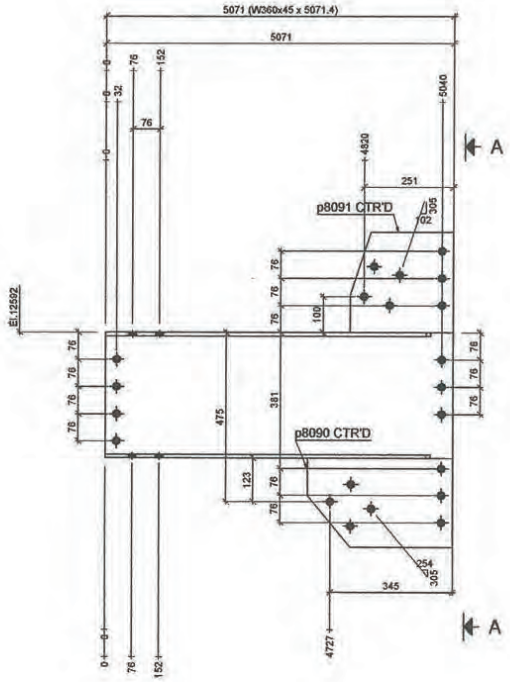

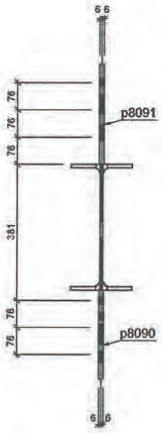

Section A - A

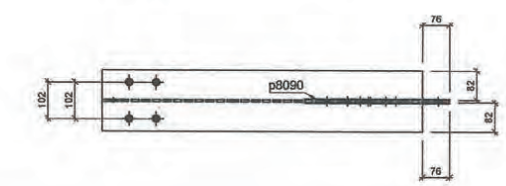

1 - B817 W360x45

d=352 b=171 t=9,8 w=6,9 k=27

Grid reference (E/7)/(D/7)

REGISTERED PROFESSIONAL ENGINEER
J. TRUDEAU
LICENSEE
NT/NU

6.3

Sauf indication contraire

Rev.	Date	Par	Description
a	2018-08-20		

Projet : **Wastewater treatment plant**

No. Projet : 0639-ST

Statut : Non défini	Commentaire :	
Détaillé par : Moise Harvey	Trou : 13/16"Ø u/n	Client : Lik construction ltd
Vérifié par: Jean Trudeau	Soudure : E70XXELECT	No. Dessin : B817
STRUCTURES M.H. inc. ENTREPRENEUR GÉNÉRAL	Acier : 350W	
	Peinture: Avec première couche	Séquence : a
	Date : 2018-08-20	

Marque	Quantité	Description	Longueur	Nuance	Finition	Poids	Poids total
BEAU	1	Poutre					
p8092	1	W360x45	4170.6	350W	Avec première couche	413.707	413.707
p8080	1	PL1/4"Ø200x380	380.0	G40.21		20.919	20.919
p8080	1	PL1/2"Ø200x340	340.0	G40.21		16.833	16.833
p8076	1	PL1/2"Ø140x304.8	304.8	G40.21		7.385	7.385
	4					458.844	458.844

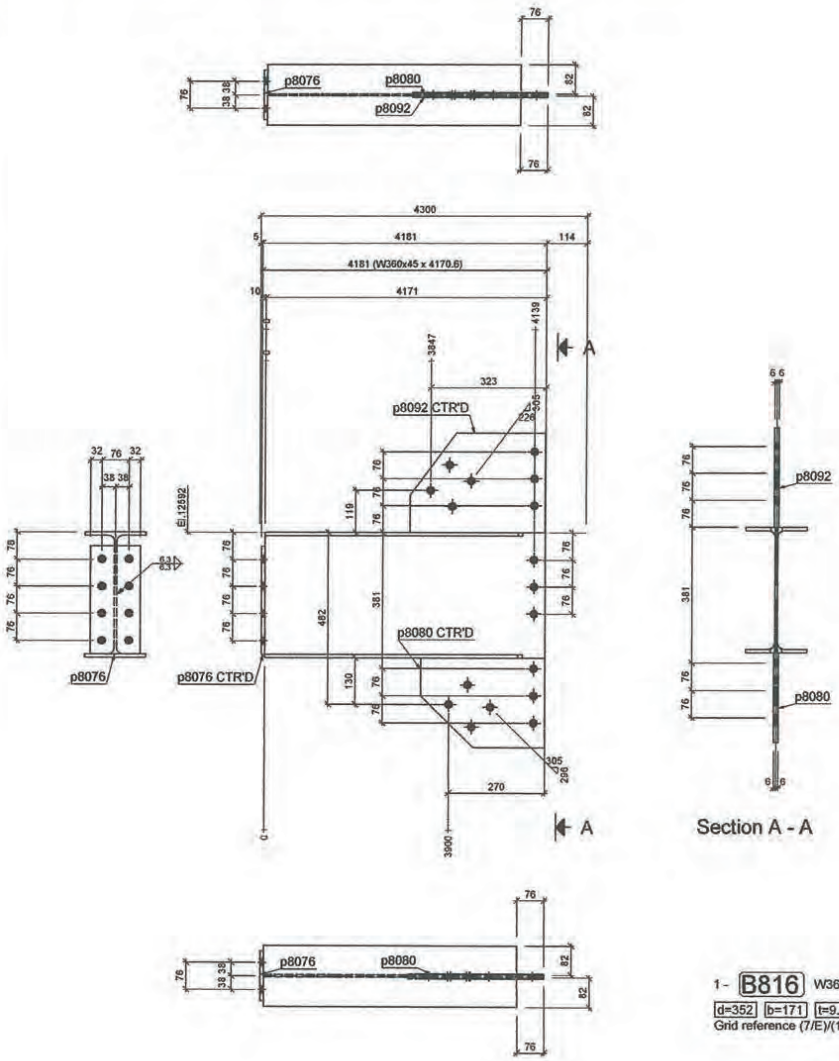

1 - B816 W360x45

d=352 b=171 t=9.8 w=6.9 k=27

Grid reference (7/E)/(1/E)

REGISTERED PROFESSIONAL ENGINEER
J. TRUDEAU
LICENSEE
NT/NU

6.3

Sauf indication contraire

Rev.	Date	Par	Description
a	2018-08-20		

Projet : Wastewater treatment plant

No. Projet : 0839-ST

Statut : Non défini	Commentaire :	
Détaillé par : Moise Harvey	Trou : 13/16"Ø u/n	Client : Klik construction ltd
Vérifié par: Jean Trudeau	Soudure : E70XXELECT	No. Dessin : B816
STRUCTURES M.H. inc. ENTREPRENEUR GÉNÉRAL	Acier : 350W	
	Peinture: Avec première couche	Séquence : a
	Date : 2018-08-20	

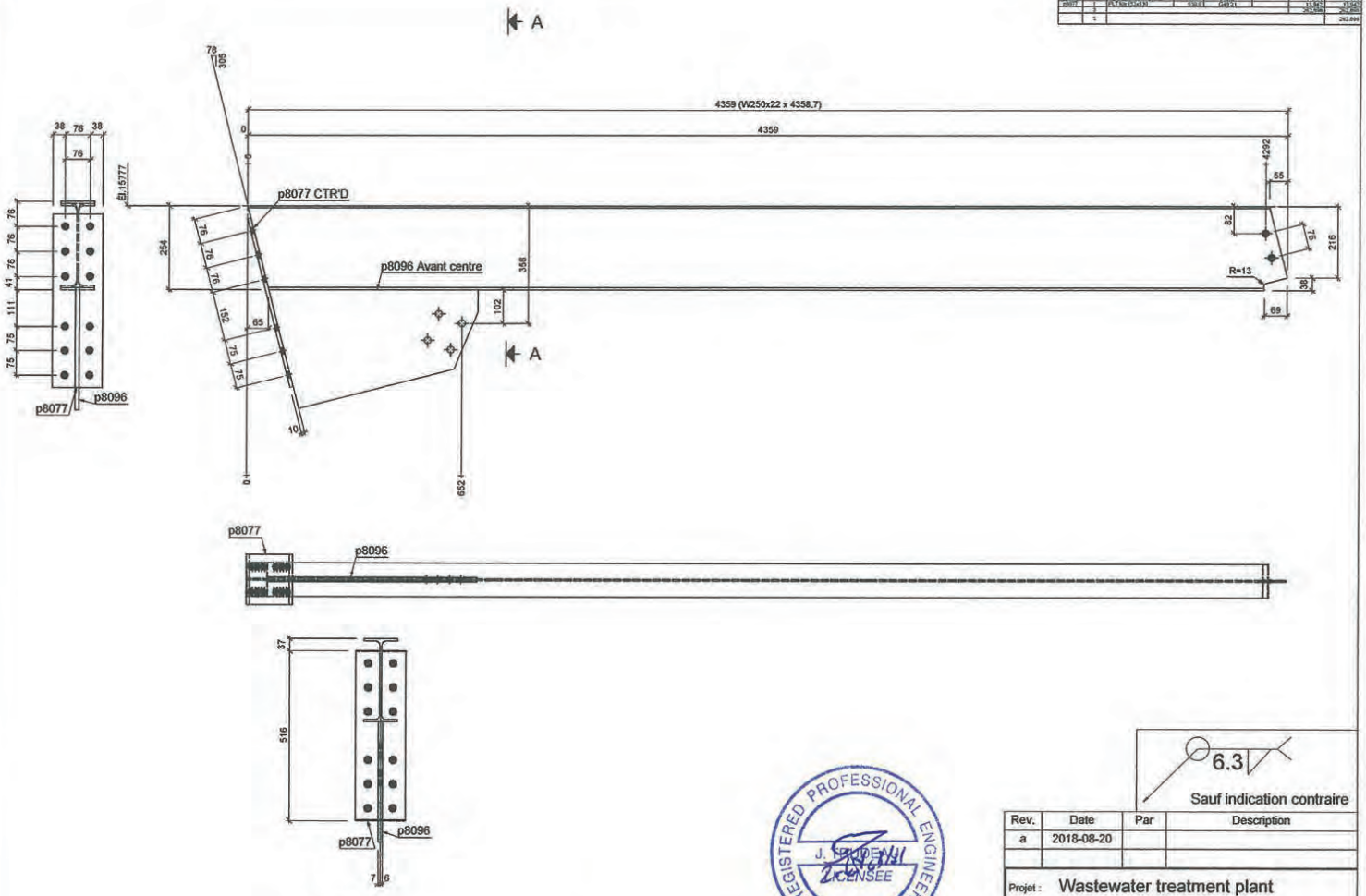

1 - B815 W250x22

d=254 | b=102 | t=6.9 | w=5.8 | k=20

Grid reference (1/D)/(7/D)

REGISTERED PROFESSIONAL ENGINEER
J. TRUDEAU
LICENSEE
NT/NU

6.3

Sauf indication contraire

Rev.	Date	Par	Description
a	2018-08-20		

Projet : Wastewater treatment plant

No. Projet : 0839-ST

Statut : Non défini	Commentaire :	
Détaillé par : Moise Harvey	Trou : 13/16"Ø u/n	Client : Atik construction ltd
Vérifié par: Jean Trudeau	Soudure : E70XXELECT	No. Dessin : B815
STRUCTURES M.H. Inc. ENTREPRENEUR GÉNÉRAL	Acier : 350W	
	Peinture : 1 couche de peinture	Sequence : a
	Date : 2018-08-20	

Marque	Quantité	Description	Longueur	Nuance	Fenêtre	Poids	Poids total
B814	1	Poutre					
p8077	1	W250x22	4358.7	350W	1	Sans de peinture	211.403
p8095	1	PLT1x(2)(6)(1)x(2)(6)(1)	635.1	G40.21			17.923
p8077	1	PLT1x(1)(2)(5)(1)	535.0	G40.21			13.942
	1						262.597
	1						262.597

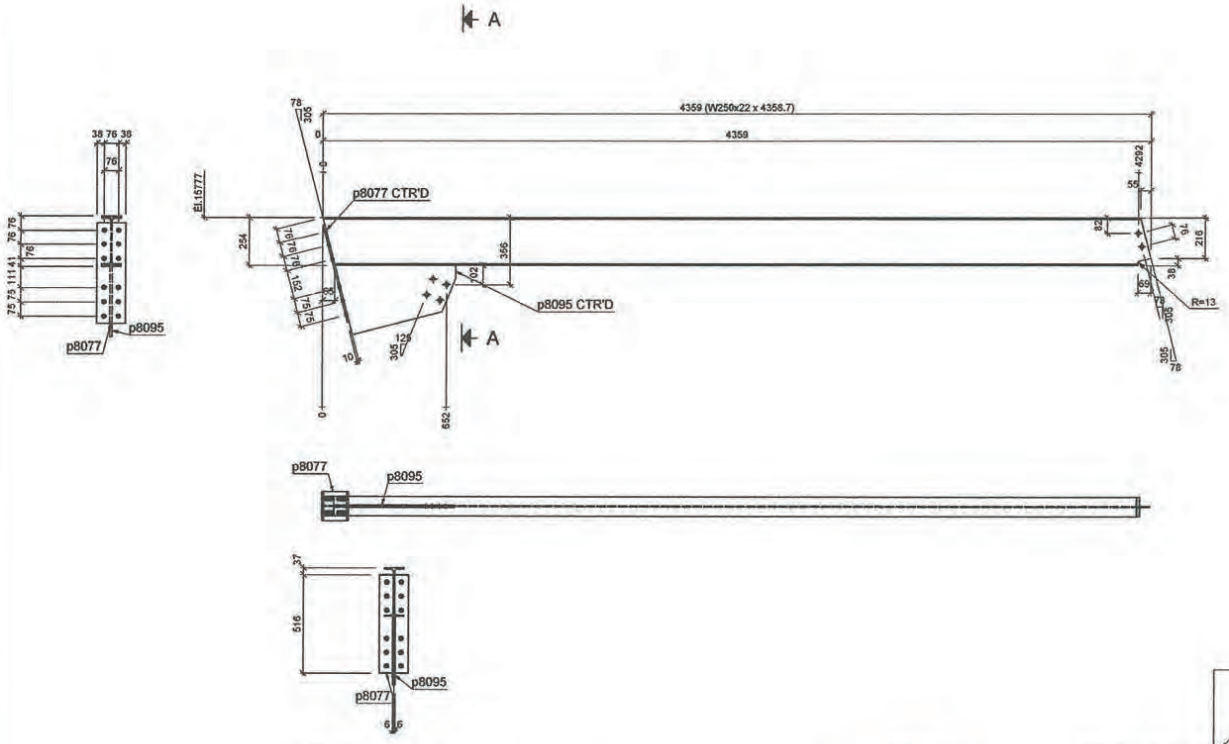

Section A - A

1 - B814 W250x22

d=254 b=102 t=6.9 w=5.8 k=20

Grid reference (1/E)/(7/E)

REGISTERED PROFESSIONAL ENGINEER
J. TRUDEAU
LICENSEE
NT/NU

6.3

Sauf indication contraire

Rev.	Date	Par	Description
a	2018-08-20		

Projet : Wastewater treatment plant

No. Projet : 0839-ST

Statut : Non défini	Commentaire :	
Détaillé par : Moise Harvey	Trou : 13/16"Ø u/n	Client : Milk construction ltd
Vérifié par: Jean Trudeau	Soudure : E70XXELECT	No. Dessin : B814
STRUCTURES M.H. inc. ENTREPRENEUR GÉNÉRAL	Acier : 350W	
	Peinture: 1 couche de peinture	Sequence : a
	Date : 2018-08-20	

Marque	Quantité	Description	Longueur	Nuance	Position	Poids	Poids total
B813	1						
B8134	1	HS152x152x6.4	1790.2	A500 GR.B	1 couche de peinture	112.412	112.482
p8079	2	PLT 6"X6"X6"X6.4	2	A500		20.000	20.000
	3					132.999	132.992
	3						132.999

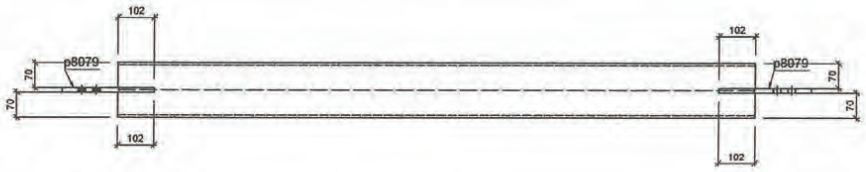

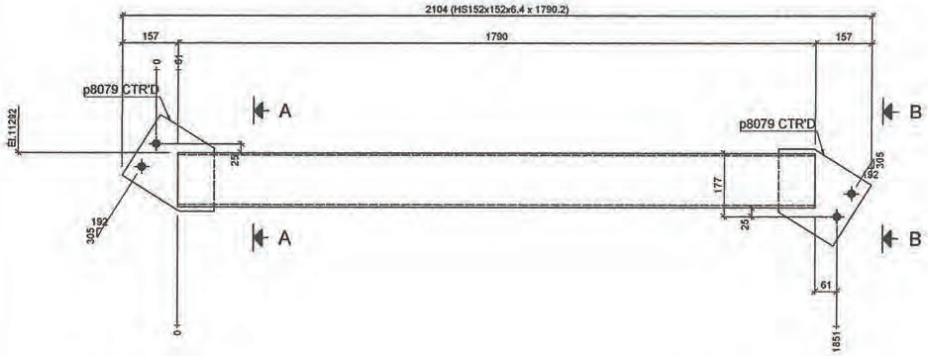

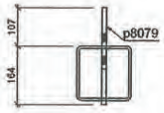

Section A - A

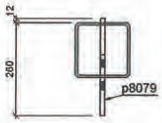

Section B - B

1 - B813 HS152x152x6.4

d=152.4 b=152.4 t=6.3 w=6.3 k=

Grid reference (/)

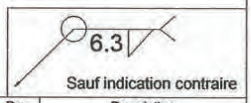

Sauf indication contraire

REGISTERED PROFESSIONAL ENGINEER
J. TRUDEAU
LICENSEE
NT/NU

Rev.	Date	Par	Description
a	2018-08-20		

Projet : Wastewater treatment plant

No. Projet : 0839-ST

Statut : Non défini	Commentaire :	
Détaillé par : Moise Harvey	Trou : 13/16"Ø u/n	Client : Lak construction ltd
Vérifié par: Jean Trudeau	Soudure : E70XXELECT	No. Dessin : B813
STRUCTURES M.H. inc. ENTREPRENEUR GÉNÉRAL	Acier : A500 GR.B	
	Peinture: 1 couche de peinture	Sequence : a
	Date : 2018-08-20	

Marque	Quantité	Description	Longueur	Nuance	Fixation	Poids	Poids total
[illegible]	2	[illegible]					
p8071	2	W150x22	4437.3	350W	1 couche de peinture	213.5	427.0
p8070	2	PLT10x130x140	146.0	G40.21		3.150	6.299
p8070	2	PLT10x130x140	146.0	G40.21		3.150	6.299
p8067	8	PLT8x73.1x104.1	104.1	G40.21		1.004	8.029
	14					225.0	451.257
	14						451.257

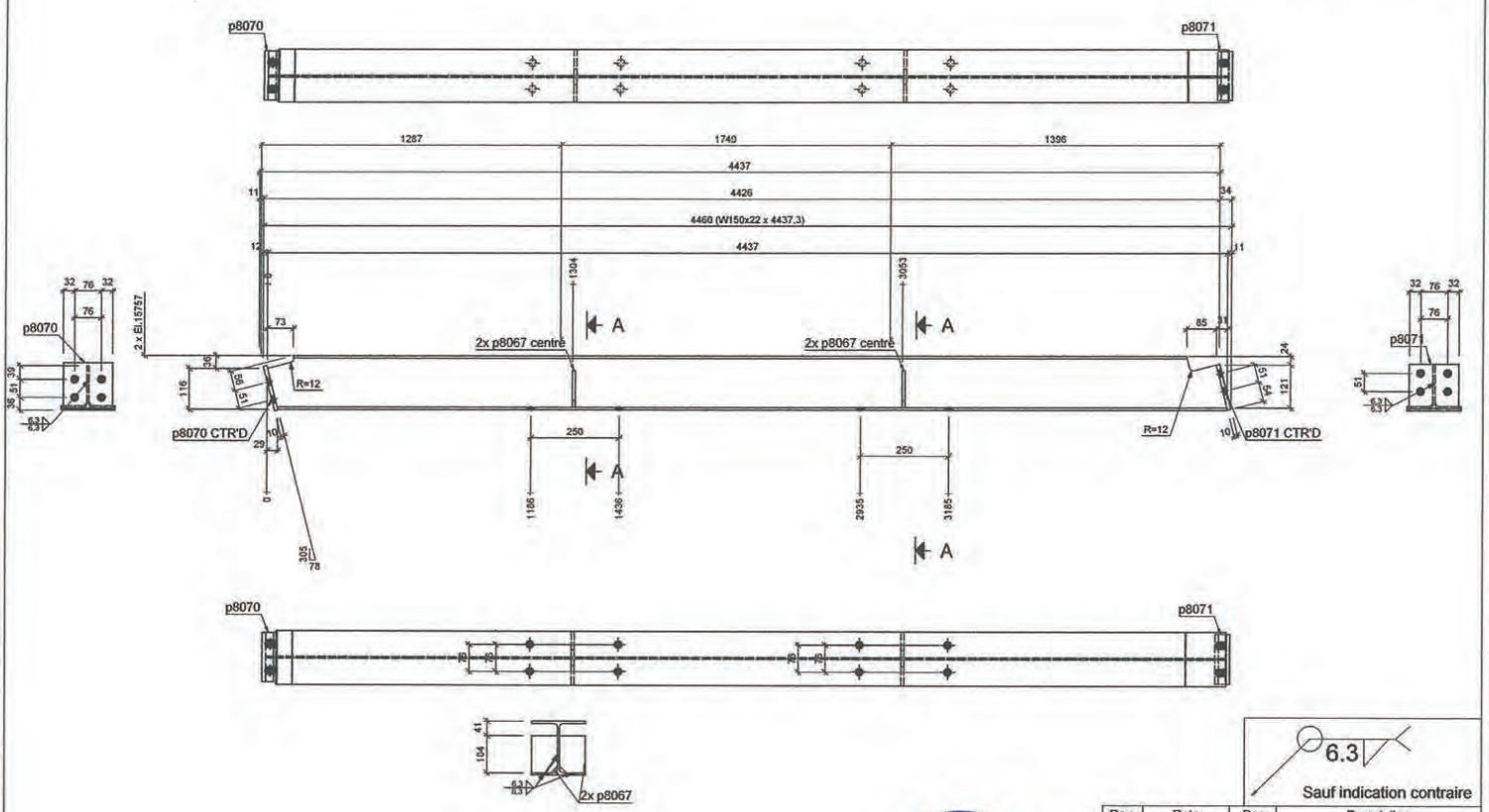

Section A - A

2 - B812 W150x22

d=152 b=152 t=6.6 w=5.8 k=18

Grid reference (1/)/(7/), (1/)/(7/)

6.3

Sauf indication contraire

REGISTERED PROFESSIONAL ENGINEER
J. TRUDEAU
LICENSÉE
NT/NU

Rev.	Date	Par	Description
a	2018-08-20		

Projet : Wastewater treatment plant

No. Projet : 0839-ST

Statut : Non défini	Commentaire :	
Détaillé par : Moise Harvey	Trou : 13/16"Ø u/n	Client : [illegible] construction ltd
Vérifié par: Jean Trudeau	Soudure : E70XXELECT	No. Dessin : B812
STRUCTURES M.H. inc. ENTREPRENEUR GÉNÉRAL	Acier : 350W	
	Peinture : 1 couche de peinture	Sequence : a
	Date : 2018-08-20	

Marque	Quantité	Description	Longueur	Nuance	Fusion	Poids	Poids total
B811	2	[illegible]					
p8070	2	W150x18	4437.4	350W	Couche de peinture	176.000	352.1[illegible]
p8071	2	PLY 10x120x110	145.0	G40.21		3.100	6.200
p8072	2	PLY 10x120x140	145.0	G40.21		3.100	6.200
	6					182.200	364.700
	6						364.700

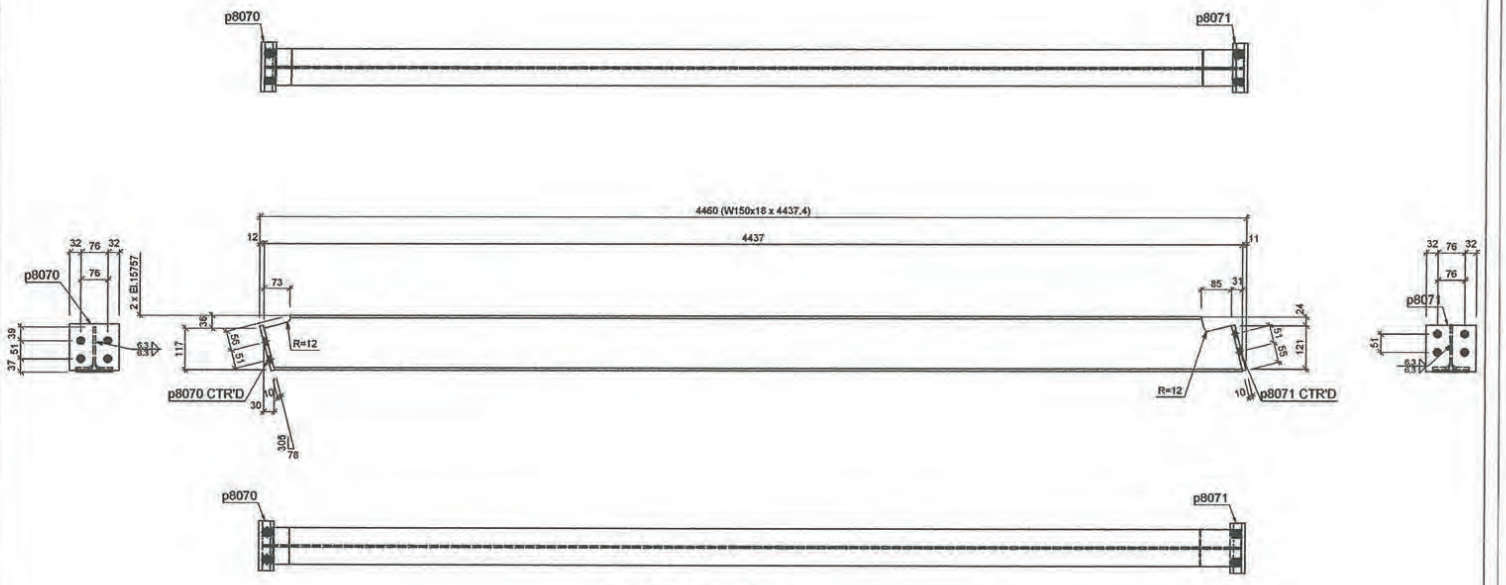

2 - B811 W150x18

d=153 b=102 t=7.1 w=5.8 k=19

Grid reference (1/)/(7/), (1/)/(7/)

6.3

Sauf indication contraire

Rev.	Date	Par	Description
a	2018-08-20		

REGISTERED PROFESSIONAL ENGINEER
J. TRUDEAU
LICENSEE
NT/NU

Projet : Wastewater treatment plant

No. Projet : 0839-ST

Statut : Non défini	Commentaire :	
Détaillé par : Moise Harvey	Trou : 13/16"Ø u/n	Client : [illegible] construction ltd
Vérifié par: Jean Trudeau	Soudure : E70XXELECT	No. Dessin : B811
STRUCTURES M.H. inc. INTERPRENEUR GÉNÉRAL	Acier : 350W	
	Peinture: 1 couche de peinture	Sequence : a
	Date : 2018-08-20	

Marque	Quantité	Description	Longueur	Finition	Fraction	Poids	Poids total
[illegible]	2						
[illegible]	3	HS152x152x6.4	1312.6	G40.21M-350W	couche de peinture	82.473	164.946
[illegible]	4	HLT12.7x170x200	200.0	G40.21		7.727	30.910
	6					97.946	195.892
	6						195.892

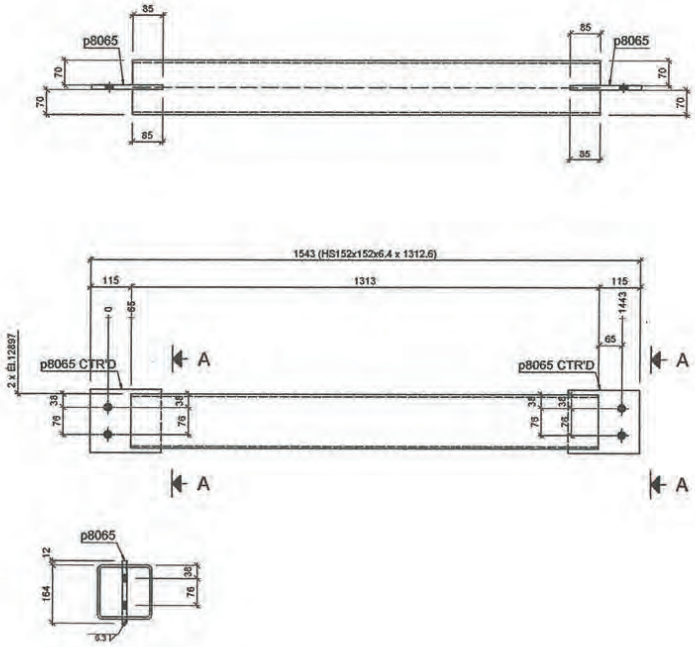

Section A - A

2 - B810 HS152x152x6.4

d=152.4 b=152.4 t=6.3 w=6.3 k=

Grid reference (/), (/)

REGISTERED PROFESSIONAL ENGINEER
J. TRUDEAU
LICENSEE
NT/NU

Rev.	Date	Par	Description
a	2018-08-20		

Projet : Wastewater treatment plant

No. Projet : 0839-ST

Statut : Non défini	Commentaire :	
Détaillé par : Moise Harvey	Trou : 13/16"Ø u/m	Client : [illegible] construction ltd
Vérifié par: Jean Trudeau	Soudure : E70XXELECT	No. Dessin : B810
STRUCTURES M.H. inc. ENTREPRENEUR GÉNÉRAL	Acier : G40.21M-350W	
	Peinture: 1 couche de peinture	Sequence : a
	Date : 2018-08-20	

Marque	Quantité	Description	Longueur	Notance	Peinture	Poids	Poids total
ASSY	1						
B804	2	HS152X152X6.4	1596.6	G40.21M-350W	Couche de peinture	103.317	103.317
P8065	2	PL13/32"x70"x20"	300.0	G40.21		7.717	15.434
	4					119.750	103.681
	0						231.681



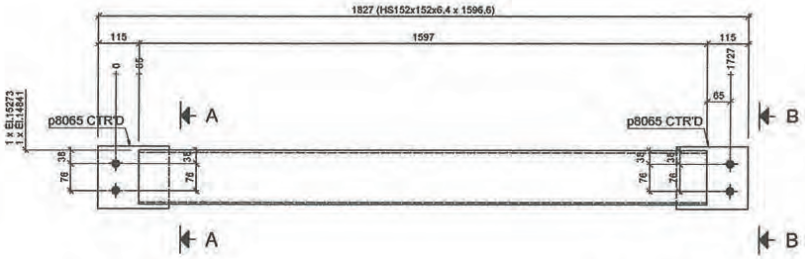

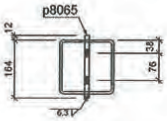

Section A - A

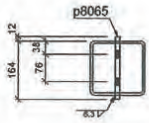

Section B - B

2 - B804 HS152x152x6.4

d=152.4 | b=152.4 | t=6.3 | w=6.3 | k=

Grid reference (/), (/)



6.3

Sauf indication contraire

Rev.	Date	Par	Description
a	2018-08-20		

Projet : Wastewater treatment plant

No. Projet : 0839-ST

Statut : Non défini	Commentaire :	
Détaillé par : Moise Harvey	Trou : 13/16"Ø u/n	Client : Nak construction ltd
Vérifié par: Jean Trudeau	Soudure : E70XXELECT	No. Dessin : B804
STRUCTURES M.H. inc. ENTREPRENEUR GÉNÉRAL	Acier : G40.21M-350W	
	Peinture : 1 couche de peinture	Sequence : a
	Date : 2018-08-20	

Marque	Quantité	Description	Longueur	Nuance	Finition	Poids	Poids total
P8053	1						
P8053	2	PLT6x75x75	75.0	G40.21		0.477	1.341
	3					0.477	1.341
	3						1.341

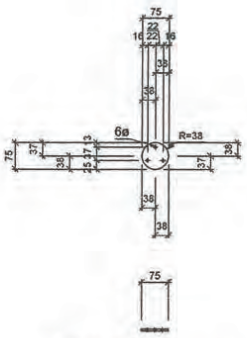

3 - P8053 PLT6x75x75

REGISTERED PROFESSIONAL ENGINEER
J. TRUDEAU
LICENSEE
NT/NU

Rev.	Date	Par	Description
a	2018-08-20		

Projet : Wastewater treatment plant
No. Projet : 0839-ST

Statut : Non défini	Commentaire :	
Détaillé par : Moise Harvey	Trou : 13/16"Ø u/n	Client : dk construction ltd
Vérifié par: Jean Trudeau	Soudure : E70XXELECT	No. Dessin : P8053
STRUCTURES M.H. Inc. ENTREPRENEUR GÉNÉRAL	Acier : G40.21	
	Peinture: Aucun	Sequence : a
	Date : 2018-08-20	

Marque	Quantité	Description	Longueur	Nuance	Finition	Poids	Poids total
P8057	1	Plaque d'acier					
P8057	1	PLT10x77x183	183.0	G40.21		2.420	2.420
	1					2.420	2.420
	1						2.420

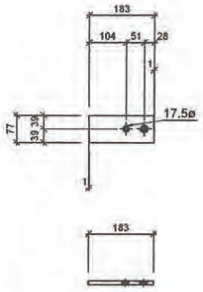

1 - P8057 PLT10x77x183

REGISTERED PROFESSIONAL ENGINEER
J. TRUDEAU
LICENSEE
NT/NU

Rev.	Date	Par	Description
a	2018-08-20		

Projet : **Wastewater treatment plant**

No. Projet : 0839-ST

Statut : Non défini	Commentaire :	
Détaillé par : Moise Harvey	Trou : 13/16"Ø u/n	Client : Klik construction ltd
Vérifié par: Jean Trudeau	Soudure : E70XXELECT	No. Dessin : P8057
STRUCTURES M.H. inc. ENTREPRENEUR GÉNÉRAL	Acier : G40.21	
	Peinture: Aucun	Sequence : a
	Date : 2018-08-20	

Quantité	Description	Longueur	Finition
1	113.0 x 2.420	61	

Marque	Quantité	Description	Longueur	Nuance	Finition	Poids	Poids total
P8069	6	Plat soudure					
p8069	6	PLT6x165x311.9	311.9	G40.21		5.344	32.063
	6					5.344	32.063
	6						32.063

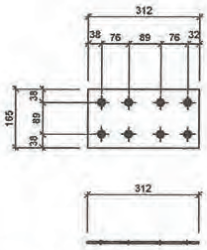

6 - P8069 PLT6x165x311.9

REGISTERED PROFESSIONAL ENGINEER
J. TRUDEAU
LICENSEE
NT/NU

Rev.	Date	Par	Description
a	2018-08-20		

Projet : **Wastewater treatment plant**

No. Projet : 0839-ST

Statut : Non défini	Commentaire :	
Détaillé par : Moise Harvey	Trou : 13/16"Ø u/n	Client : dik construction ltd
Vérifié par: Jean Trudeau	Soudure : E70XXELECT	No. Dessin : P8069
STRUCTURES M.H. inc. ENTREPRENEUR GÉNÉRAL	Acier : G40.21	
	Peinture: Aucun	Sequence : a
	Date : 2018-08-20	

Quantité	Description	Longueur	Finition
32	135 kg ASTM	32	

Marque	Quantité	Description	Longueur	Nuance	Finition	Poids	Poids total
P8086	1	PLT6X67.2X279.6	279.63	G40.21		1.529	1.529
	1					1.529	1.529
	1						1.529

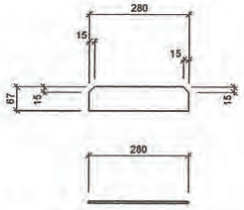

1 - P8086 PLT6x67.2x279.6

REGISTERED PROFESSIONAL ENGINEER
J. TRUDEAU
LICENSEE
NT/NU

Rev.	Date	Par	Description
a	2018-08-20		

Projet : Wastewater treatment plant
No. Projet : 0839-ST

Statut : Non défini	Commentaire :	
Détaillé par : Moise Harvey	Trou : 13/16"Ø u/n	Client : dk construction ltd
Vérifié par: Jean Trudeau	Soudure : E70XXELECT	No. Dessin :
STRUCTURES M.H. Inc. ENTREPRENEUR GÉNÉRAL	Acier : G40.21	P8086
	Peinture: Aucun	Sequence : a
	Date : 2018-08-20	

Marque	Quantité	Description	Longueur	Nuance	Finition	Poids	Poids total
P8063	18	PLT6x165.2x318	318.0	G40.21		5.455	98.189
p8063	18					5.455	98.189
	18						98.189

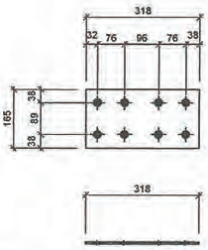

18 - P8063 PLT6x165.2x318

REGISTERED PROFESSIONAL ENGINEER
J. TRUDEAU
LICENSEE
NT/NU

Rev.	Date	Par	Description
a	2018-08-20		

Projet : **Wastewater treatment plant**

No. Projet : 0839-ST

Statut : Non défini	Commentaire :	
Détaillé par : Moise Harvey	Trou : 13/16"Ø u/n	Client : Kiak construction ltd
Vérifié par: Jean Trudeau	Soudure : E70XXELECT	No. Dessin : P8063
STRUCTURES M.H. inc. ENTREPRENEUR GÉNÉRAL	Acier : G40.21	
	Peinture: Aucun	Sequence : a
	Date : 2018-08-20	

(2094)

Moment connection is not requiered

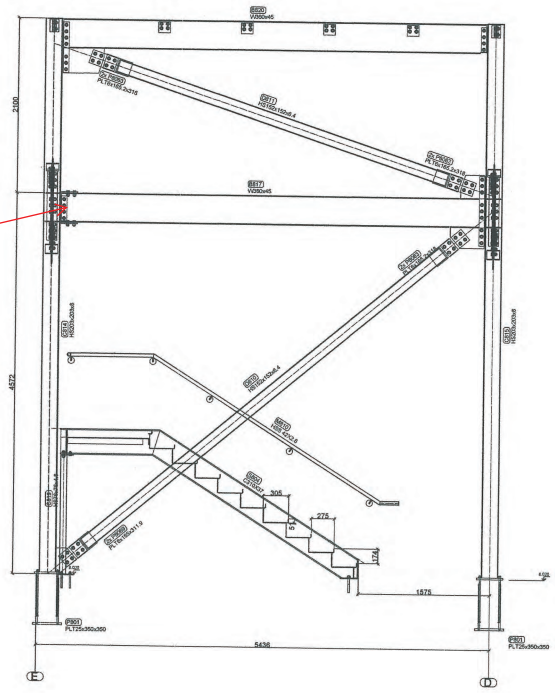

Detail view axe 7

PROJET :

IQALUIT WASTEWATER TREATMENT PLANT UPGRADE

REGISTERED PROFESSIONAL ENGINEER
NT/NU

Rev.	Date	Par	Description
A	2018-06-11		

STRUCTURES M.H. inc.
ENTREPRENEUR GÉNÉRAL

Date : 2018-08-20

INGÉNIEUR : Jean Trudeau

Client : kudlik construction ltd

Projet : Wastewater treatment plant

No. Projet : 0839-ST

Détaillé par : Moise Harvey

TITRE : Detail view axe 7

No. Dessin : ST-008

Séquence : A

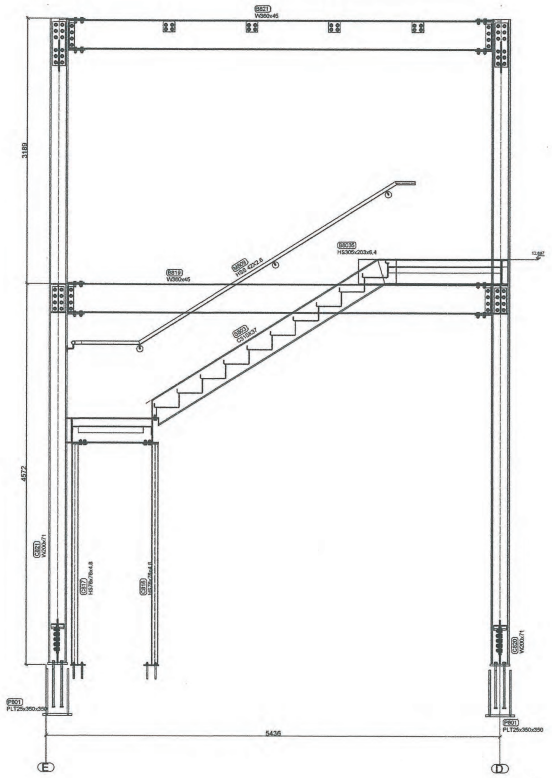

Detail view axe 6

PROJET :

IQALUIT WASTEWATER TREATMENT PLANT UPGRADE

REGISTERED PROFESSIONAL ENGINEER
J. TRUDEAU
LICENSEE
NT/NU

Rev.	Date	Par	Description
A	2018-06-11		

STRUCTURES M.H. inc.
ENTREPRENEUR GÉNÉRAL
1575 Av. de la Technologie, Ste. 100, 1ER
Téléphone : 418 460-2289 Télécopieur : 418 668-5235
structures.mh@gmail.com

Date : 2018-06-20

INGÉNIEUR : Jean Trudeau

Client : kudlik construction ltd

Projet : Wastewater treatment plant

No. Projet : 0839-ST

Détaillé par : Moise Harvey

TITRE : Detail view axe 6

Soudure : 6700XBLECT
Time : 13h19'18 uns
Acier :
Fenture :

No. Dessin : ST-007

Séquence : A

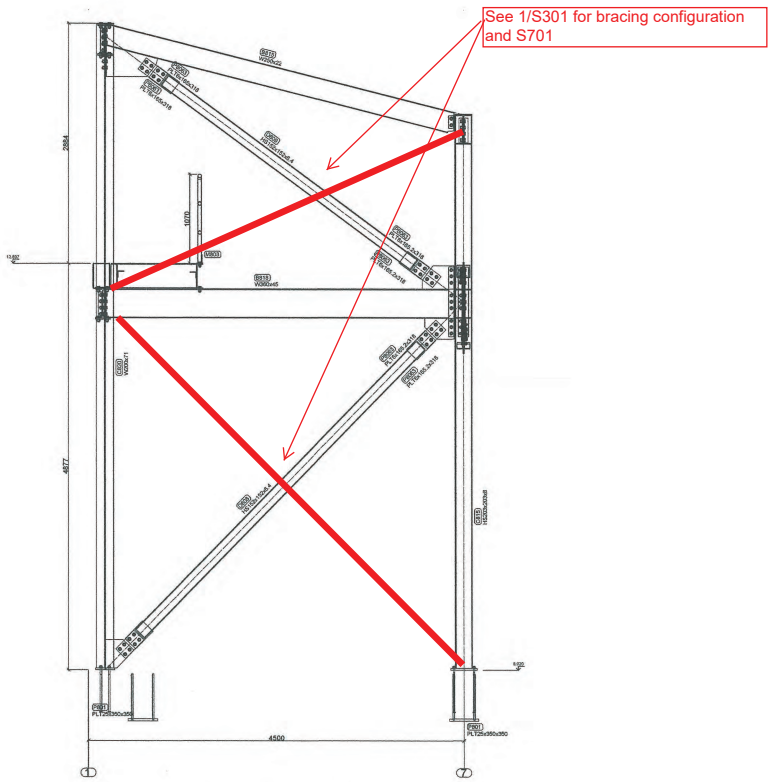

Detail view axe D

PROJET :

IQALUIT WASTEWATER TREATMENT PLANT UPGRADE

REGISTERED PROFESSIONAL ENGINEER
J. TRUDEAU
LICENSEE
NT/NU

Rev.	Date	Par	Description
A	2018-06-11		

STRUCTURES M.H. inc.
ENTREPRENEUR GÉNÉRAL
3570 Av. de la Technologie, Mme UBC, 200
Téléphone : 418-480-2188 Télécopieur : 418-668-9235
structures.mh@gmail.com

Date : 2018-06-20

INGÉNIEUR : Jean Trudeau

Client : kudlik construction ltd

Projet : Wastewater treatment plant

No. Projet : 0839-ST

Détaillé par : Moise Harvey

TITRE : Detail view axe D

Soudure : ETRANGLEST
Tiré : 13/10/10 am
Acier :
Fixture :

No. Dessin : ST-006

Sequence : A

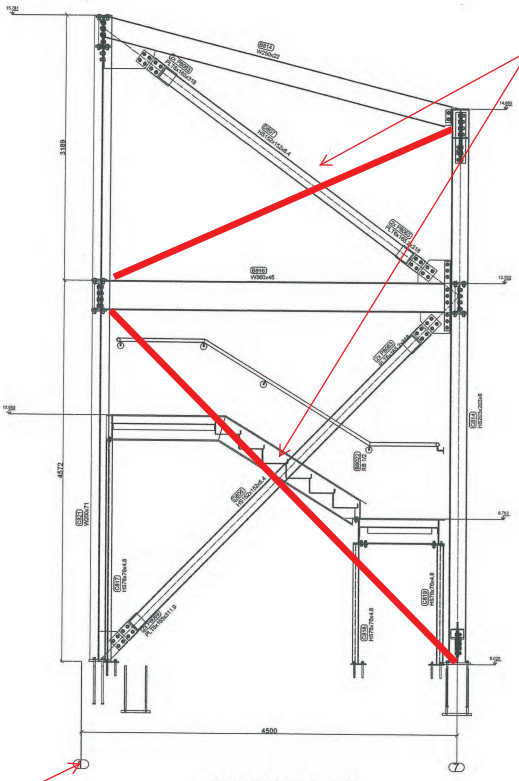

Detail view axe E

PROJET :

IQALUIT WASTEWATER TREATMENT PLANT UPGRADE

REGISTERED PROFESSIONAL ENGINEER
J. TRUDEAU
LICENSEE
NT/NU

Rev.	Date	Par	Description
A	2018-06-11		

STRUCTURES M.H. inc.
ENTREPRENEUR GÉNÉRAL

Date : 2018-06-20

INGÉNIEUR : Jean Trudeau

Client : kudlik construction ltd

Projet : Wastewater treatment plant

No. Projet : 0839-ST

Dessiné par : Moise Harvey

TITRE : Detail view axe E

No. Dessin : ST-005

Séquence : A

min. thickness
0.91mm

-Steel deck galv. 38 mm on the roof.
-Steel deck is weld
-Support member $\frac{36}{7}$
-Screw *12 @ 300mm c/c

HSS column/roof joist vertical slip connection, see 12/S501, typ.

W150X22 acceptable

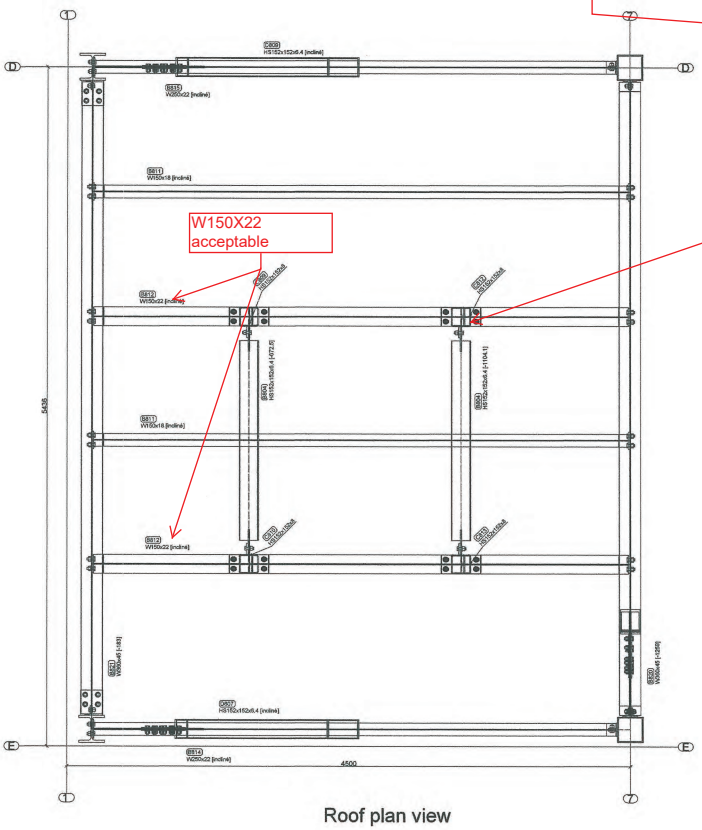

Roof plan view

PROJET :
IQALUIT WASTEWATER TREATMENT PLANT UPGRADE

REGISTERED PROFESSIONAL ENGINEER
NT/NU

Rev.	Date	Par	Description
A	2018-08-11		

STRUCTURES M.H. inc.
ENTREPRENEUR GÉNÉRAL

Date : 2018-08-20

INGÉNIEUR : Jean Trudeau

Client :
kudlik construction ltd

Projet :
Wastewater treatment plant

No. Projet :
0839-ST

Dessiné par :
Moise Harvey

TITRE :
Roof

No. Dessin :
ST-004

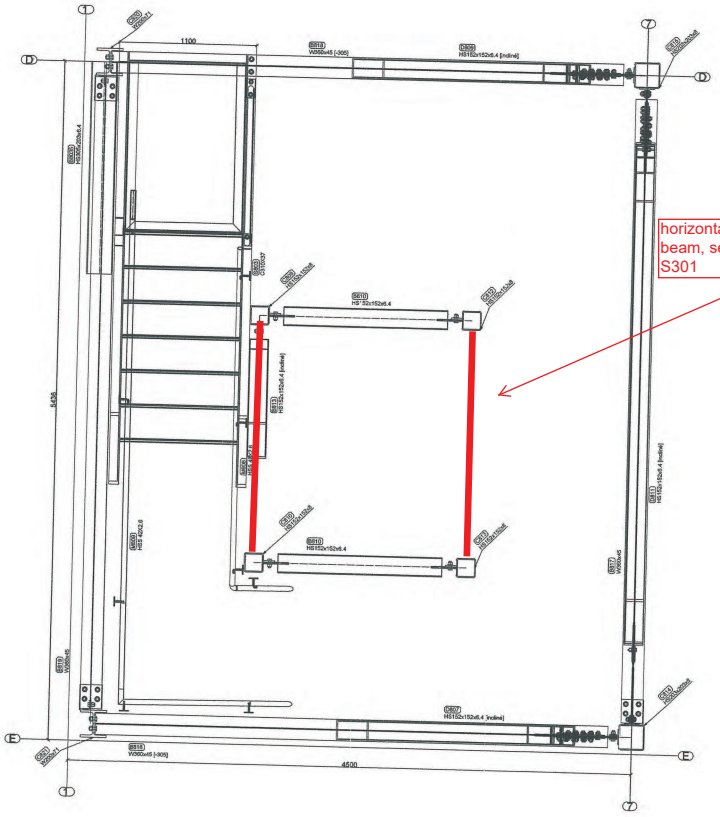

Plan view elevation 12 572

PROJET :

IQALUIT WASTEWATER TREATMENT PLANT UPGRADE

REGISTERED PROFESSIONAL ENGINEER
LICENSEE
NT/NU

Rev.	Date	Par	Description
A	2018-06-11		

STRUCTURES M.H. inc.
ENTREPRENEUR GÉNÉRAL

Date : 2018-08-20

INGÉNIEUR : Jean Trudeau

Client : kudlik construction ltd

Projet : Wastewater treatment plant

No. Projet : 0839-ST

Dessiné par : Moïse Harvey

TITRE : Plan view elevation 12 572

No. Dessin : ST-003

Révision : A

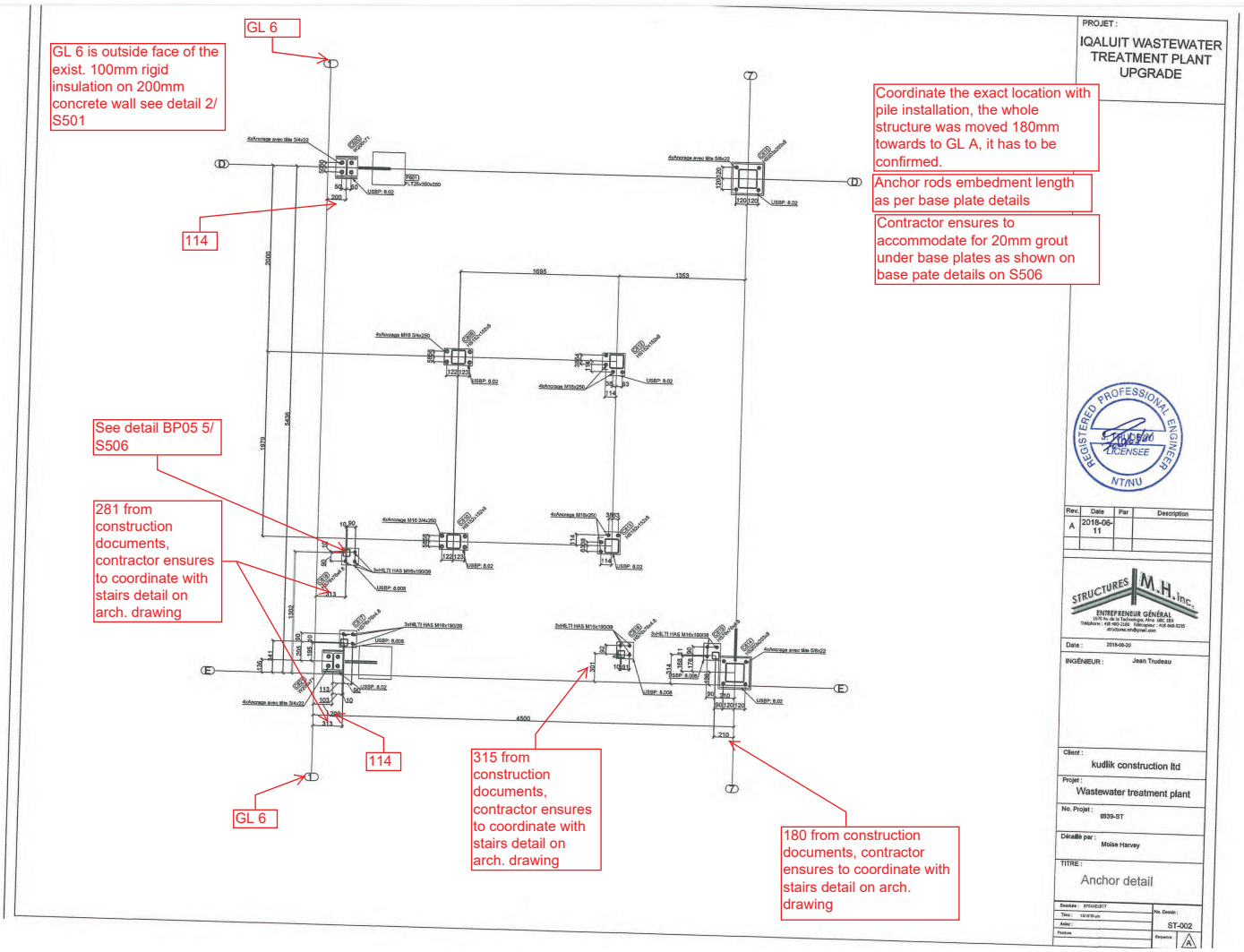
GL 6
GL 6 is outside face of the exist. 100mm rigid insulation on 200mm concrete wall see detail 2/ S501
114
See detail BP05 5/ S506
281 from construction documents, contractor ensures to coordinate with stairs detail on arch. drawing
315 from construction documents, contractor ensures to coordinate with stairs detail on arch. drawing
180 from construction documents, contractor ensures to coordinate with stairs detail on arch. drawing
Coordinate the exact location with pile installation, the whole structure was moved 180mm towards to GL A, it has to be confirmed.
Anchor rods embedment length as per base plate details
Contractor ensures to accommodate for 20mm grout under base plates as shown on base pate details on S506
PROJET :
IQALUIT WASTEWATER TREATMENT PLANT UPGRADE
REGISTERED PROFESSIONAL ENGINEER
LICENSEE
NT/NU
Rev. | Date | Par | Description
A | 2018-06-11
STRUCTURES M.H. inc.
ENTREPRENEUR GÉNÉRAL
Date : 2018-06-20
INGÉNIEUR : Jean Trudeau
Client : kudlik construction ltd
Projet : Wastewater treatment plant
No. Projet : 0939-ST
Détaillé par : Moise Harvey
TITRE : Anchor detail
No. Dessin : ST-002

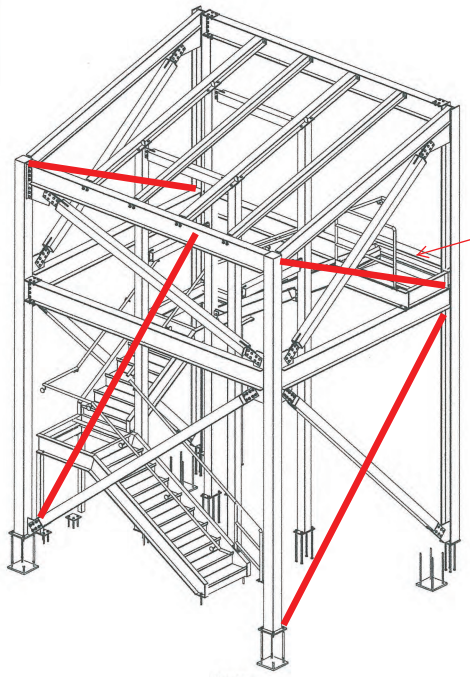

3D view

Coordinate the exact location with pile installation, the whole structure was moved 180mm towards to GL A, it has to be confirmed.

for wall bracing configuration see section on S301 and isometric view on S701, typ

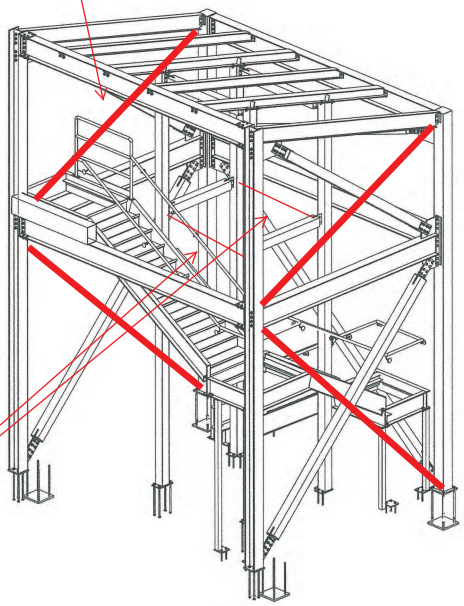

3D view

missing HSS beam see 6 &7 S301

PROJET :

IQALUIT WASTEWATER TREATMENT PLANT UPGRADE

REGISTERED PROFESSIONAL ENGINEER
BUREAU
LICENSEE
NT/NU

Rev.	Date	Par	Description
A	2018-06-11		

STRUCTURES M.H. inc.
ENTREPRENEUR GÉNÉRAL

Date : 2018-06-20

INGÉNIEUR : Jean Trudeau

Client : kudlik construction ltd

Projet : Wastewater treatment plant

No. Projet : 0839-ST

Dérailé par : Moise Harvey

TITRE : 3D view

No. Dessin : ST-001

Révision : A

SUBMITTALS IDENTIFICATION SHEET

PROJECT: Wastewater Treatment Plant Upgrade
Iqaluit, Nunavut

NUNAMI
STANTEC LIMITED

1088C Noble House
Iqaluit NU
www.stantec.com

CONTRACTOR: Kudlik Construction Ltd, Project 2018-062

Telephone: 867-979-1166

E-mail: srousseau@kudlik.biz

SUBCONTRACTOR:

Person responsible:

Telephone: E-mail:

PRODUCT SUBMITTED:

☐ As Specified

☐ Alternate

SUPPLIER or MANUFACTURER: Givesco

Person responsible: Marcel Tanguay

Telephone: E-mail: mtanguay@givesco.com

DESCRIPTION OF SUBMITTAL: RFI-084 Hydrotite

# of pages:

Reference to drawings:

Reference to specs:

Division: 03 Section: 03 35 00 – 03 35 05

REMARKS:

REVIEW AND COMMENTS (for use by Consultants):

STANTEC PROJECT #: 110126045

SUBMITTAL # STC-011

This review by Stantec is for general conformance with the design concept of Stantec's design of the:

☐ Architectural ☐ Electrical
☒ Structural ☐ Other
☐ Mechanical

component(s) only and does not mean that Stantec has verified or approves the shop drawing(s). The Contractor remains solely responsible for the shop drawing(s) and this review by Stantec does not relieve the Contractor of the Contractor's responsibility for errors or omissions in the shop drawing(s) or for meeting all requirements of the contract documents. This review does not mean that Stantec approves the detailed design inherent in the shop drawing, responsibility for which shall remain with the Contractor submitting same, nor does this review mean that Stantec accepts any deviation of the shop drawing(s) from the contract documents. The Contractor is responsible for confirming all dimensions and correlating them at the job site, for all construction means, methods and techniques, and for coordination of construction work of all trades, including coordination of all shop drawings.

Stantec

☑ REVIEWED

☐ REVIEWED, AS NOTED

☐ REVISE AND RESUBMIT

☐ NOT REVIEWED

DATE 2018-10-26

BY pclyne

Review of this submission is for compliance with general intent of the contract. This review does not relieve the Sub-Contractor, Supplier or Manufacturer of responsibility for error or omissions in the submission or the responsibility of meeting all requirements of the contract documents. Any deviation from the contract documents initiated by the Sub-Contractor, Supplier or Manufacturer shall be at their sole risk. QUANTITIES AND DETAIL DIMENSIONS ARE THE SUB-CONTRACTORS OR SUPPLIERS RESPONSIBILITY. VERIFY DATA WITH FIELD DIMENSIONS.

SUBMITTAL TRACKING No.: **STC-011**

2018-10-26

HYDROTITE CJ-0725 - *Hydrophilic Waterstop for Concrete Constuction Joints*

Hydrotite CJ-0725 (with expansion delay coating)

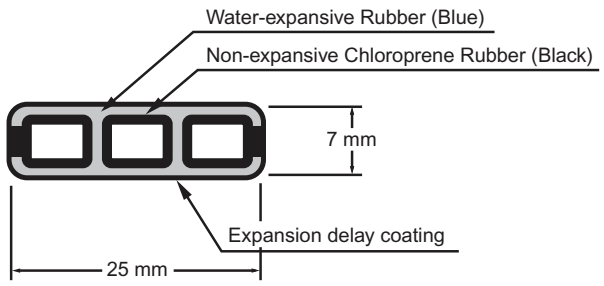

DESCRIPTION

HYDROTITE CJ-0725 is a state-of-the-art hydrophilic waterstop. Comprised of non-bentonite synthetic chloroprene rubber, **HYDROTITE** has unmatched durability and water sealing capacity. Expanding when exposed to water, **HYDROTITE** conforms to gap variations along the joint. The swelling action combined with **HYDROTITE**'s co-extrusion ensures complete sealing even under high hydrostatic head pressures. Due to its slim profile, excellent concrete consolidation can be expected around the waterstop, with little chance of the profile being moved out of position when concrete is placed. The small cross section allows most **CJ** profiles to be packaged in convenient 10 meter rolls weighing less than 3 kilograms. **HYDROTITE CJ** profiles, as well as all **HYDROTITE** profiles, are treated with a special delay coating to prevent it from reacting with fresh, moist concrete and expanding before curing takes place.

APPLICATION

HYDROTITE CJ-0725 is designed for sealing construction joints in new concrete structures such as:

- potable water reservoirs
- utility chambers
- swimming pools
- cast-in-place transit tunnels
- sewage treatment facilities
- parking garages
- bridges
- hydro dams

HYDROTITE CJ-0725 is commonly installed as a waterstop between new and existing structures during facility expansion projects. Large concrete refacing and rehabilitation projects benefit from the ease of installation of **HYDROTITE**.



HYDROTITE CJ-0725 *is glued to a concrete footing during the construction of a new potable water reservoir*

FEATURES

- delay coating to prevent premature swelling
- co-extruded to create directional growth
- no difficult split forming required
- fast, simple and economical to install
- resistant to common chemicals and microbacterial attack
- proven track record

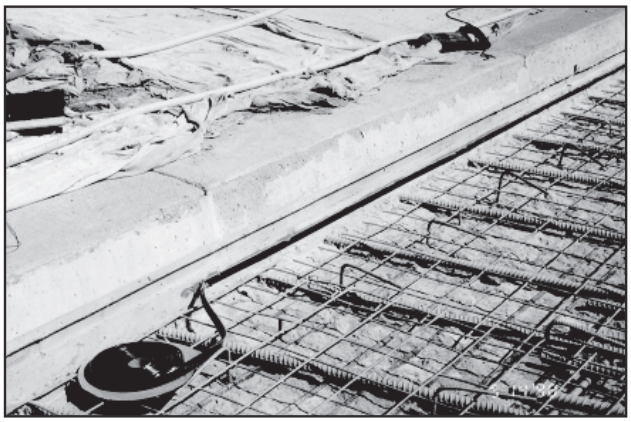

HYDROTITE CJ-0725 *is glued and fastened prior to the placement of a concrete traffic overlay on a large bridge rehabilitation*

1-800-663-6633 / info@hydrotite.ca Copyright © 2011 Multiurethanes Ltd. All rights reserved

● HYDROPHILIC WATER SEALING MATERIALS ● HYDROPHILIC WATER SEALING MATERIALS ●

HYDROTITE CJ-0725 - *Hydrophilic Waterstop for Concrete Constuction Joints*

PRODUCT APPLICATION

1. **General:**

Bond **HYDROTITE** profiles to smooth, even surfaces, free of dirt, oil or laitance for best results. Maintain a minimum of 50 mm concrete coverage over **HYDROTITE** when using 25 mPa or greater compressive strength concrete. Increase the coverage to 100 mm on reduced strength concrete. **HYDROTITE CJ** profiles may be installed in a formed groove of appropriate dimensions or directly on a flat concrete surface.

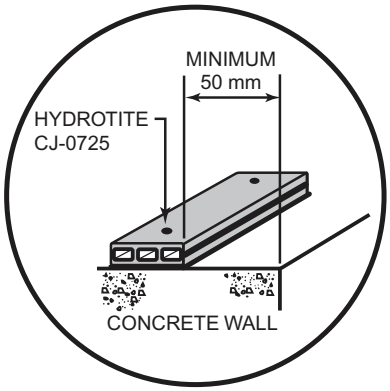

2. **Forming Requirements:**

HYDROTITE CJ profiles are installed after the form is stripped from the first pour and before the second concrete pour is made. Therefore, splitting the form is not required. Due to the hydrophilic nature of the **HYDROTITE** product, installation of the profile should be timed as close as possible to the second placement of concrete. This will reduce the chance for premature expansion of **HYDROTITE** due to rain water or ground water exposure.

3. **HYDROTITE / PVC Junctions:**

HYDROTITE CJ profiles are commonly used in conjunction with typical PVC waterstops. **HYDROTITE CJ** profiles should be cut to butt up directly to the PVC. Place several drops of a cyanacrylate type adhesive (super-glue) to the PVC and the cut end of **HYDROTITE** and immediately join the ends together. Hold in position for approximately 30 seconds to allow the adhesive to set. Apply a sufficient bead of **LEAKMASTER** to the **HYDROTITE** / PVC junction.



HYDROTITE CJ-0725 *and* **LEAKMASTER** *are used during many concrete rehabilitation projects*

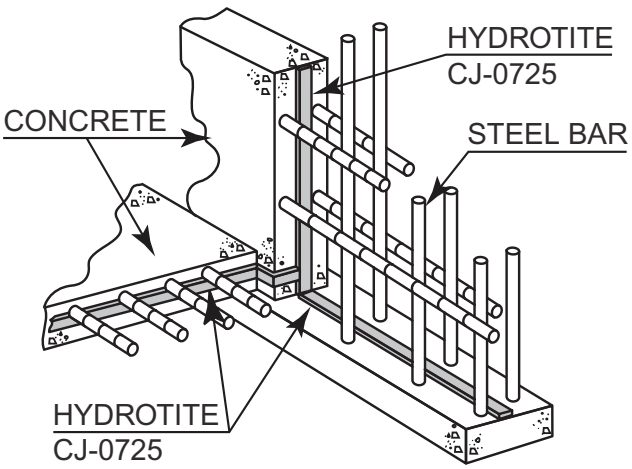

 Copyright © 2011 Multiurethanes Ltd. All rights reserved

HYDROTITE CJ-0725 - *Hydrophilic Waterstop for Concrete Constuction Joints*

4. **Bonding to Concrete:**

Remove all dust, oil, laitance, etc. from the concrete surface prior to installing **HYDROTITE**. Depending on concrete surface conditions, one of several adhesives can be used.

Normal forming practice leaves a sufficiently smooth surface for direct bonding of **HYDROTITE** with a chloroprene rubber compatible adhesive. **MULTIURETHANES PL PREMIUM ADHESIVE** can be used for this purpose. This adhesive works well when applied to dry or damp concrete surfaces. Apply a sufficient bead of **PL PREMIUM** to the concrete substrate to insure a smooth level surface. Once this condition is met, place the **HYDROTITE** profile into position. Concrete nails or special fasteners maybe used as required to hold the profile in position while the adhesive cures.

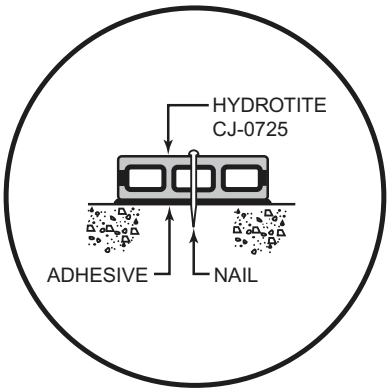

SMOOTH CONCRETE SURFACES

Concrete surfaces left rough due to jack hammering, extensive weathering, etc. should be brought to a smooth level condition. **LEAKMASTER**, a single component swellable sealant, can be used for this purpose when the concrete surface is dry. Apply a sufficient bead of **LEAKMASTER** to the rough concrete to insure that a smooth level surface will result. The **HYDROTITE** profile should be placed in position within 4 hours. Concrete nails or special fasteners may be used on vertical or overhead surfaces to hold the profile in position while the **LEAKMASTER** cures.

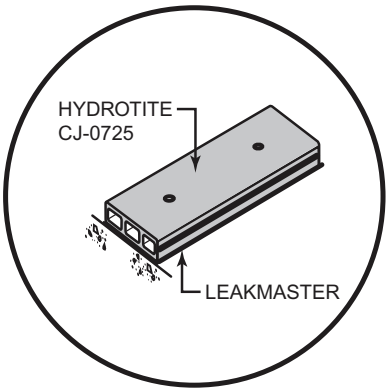

ROUGH CONCRETE SURFACES

A 2-part epoxy may also be used to level extremely erratic surfaces. **MULTIURETHANES GEL-LOC EPOXY** can be used on rough, damp concrete surfaces to bond **HYDROTITE** profiles in position. The **HYDROTITE** profile should be applied to the bed of epoxy prior to final cure, approximately 30 minutes. Again, concrete nails may be used on vertical or overhead applications.

NOTE: In all 3 installation methods, installed **HYDROTITE** profiles should be inspected to ensure that no separation exists between the **HYDROTITE** profile and the substrate. If this is observed, apply a suitable bead of **LEAKMASTER** in the separation and secure with nails or special fasteners as required.

1-800-663-6633 / info@hydrotite.ca Copyright © 2011 Multiurethanes Ltd. All rights reserved

HYDROPHILIC WATER SEALING MATERIALS • HYDROPHILIC WATER SEALING MATERIALS •

HYDROTITE CJ-0725 - *Hydrophilic Waterstop for Concrete Constuction Joints*

5. **Splicing:**

HYDROTITE CJ profiles are designed with a cellular cross section. The cellular cross section allows the profile to compress slightly when concrete is placed and rebound as the concrete shrinks during curing. The cellular cross section also acts to control the expansive force placed on the surrounding concrete.

Straight lengths of **CJ** profiles should be cut square with a sharp knife or good pair of shears. Place several drops of a cyanoacrylate type adhesive (super-glue) on the cut ends of **HYDROTITE** and immediately join the ends together. Hold in position for approximately 30 seconds to allow the adhesive to set. Proper alignment and bonding of the cut ends will prevent water entering the cells of the profile. Future hydration of the waterstop will further seal the bond area.

Flat 90° corners should be spliced by miter cutting the two ends at 45° and proceeding in a manner similar to the above. Where space permits, **CJ-0725** can be bent to an inside radius of approximately 50 mm about its long axis, thus eliminating a spliced joint.

BEND TO RADIUS



CJ CAN BE BENT
TO A MINIMUM RADIUS OF APPROX. 50 mm
OTHERWISE MITER AND BOND WITH SUPER-GLUE

Flat "T's" and "X's" should be made by butt slicing and joining the legs with the use of cyanacrylate adhesive.

Vertical 90° corner, vertical "T's" and vertical "X's" should be butted and bonded with the cyanacrylate adhesive. **MULTIURETHANES** offers contractors prefabricated and spliced components.

NOTE: All splices must be further enhanced by placing a bead of **LEAKMASTER** at the splice.

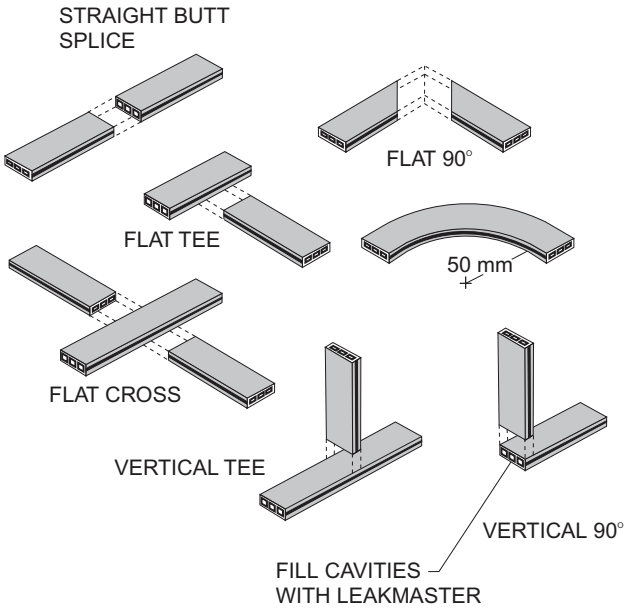

6. **Important Precautions:**

Cracking of the concrete, caused by the expansion pressure of **HYDROTITE**, can be avoided by maintaining a 50 mm minimum concrete coverage. Increase this coverage if lightweight or low strength concrete (< 25 mPa compressive strength) is used. Appropriate concrete placement techniques must be implemented to ensure proper concrete consolidation.

HYDROTITE should be stored in a cool, dark, dry place. Exposure to moisture prior to installation may expand **HYDROTITE** prematurely. If **HYDROTITE** is installed in an expanded condition, the effectiveness of the seal may be severely reduced.

Once installed, adequate measures should be taken to prevent exposure to rain water, ground water, etc. before the joint is covered with concrete.

PACKAGING

CJ-0725 is packaged in boxes containing 6 x 10 m rolls.

 Copyright © 2011 Multiurethanes Ltd. All rights reserved

SUBMITTALS IDENTIFICATION SHEET

PROJECT: Wastewater Treatment Plant Upgrade
Iqaluit, Nunavut

NUNAMI
STANTEC LIMITED
1088C Noble House
Iqaluit NU
www.stantec.com

CONTRACTOR: Kudlik Construction Ltd, Project 2018-062

Telephone: 867-979-1166

E-mail: srousseau@kudlik.biz

SUBCONTRACTOR: Structure MH

Person responsible: Moise Harvey

Telephone: (418)487-8772 E-mail: structures.mh@gmail.com

PRODUCT SUBMITTED:

☑ As Specified

☐ Alternate

SUPPLIER or MANUFACTURER:

Person responsible:

Telephone: E-mail:

DESCRIPTION OF SUBMITTAL:

# of pages:

Reference to drawings:

Reference to specs:

Division: 05 Section: 05 12 23 - 05 21 00

REMARKS:

Fall arrest Anchor

REVIEW AND COMMENTS (for use by Consultants):

STANTEC PROJECT #: 110126045 SUBMITTAL # STC-012

This review by Stantec is for general conformance with the design concept of Stantec's design of the:

☐ Architectural ☐ Electrical
☑ Structural ☐ Other
☐ Mechanical

component(s) only and does not mean that Stantec has verified or approves the shop drawing(s). The Contractor remains solely responsible for the shop drawing(s) and this review by Stantec does not relieve the Contractor of the Contractor's responsibility for errors or omissions in the shop drawing(s) or for meeting all requirements of the contract documents. This review does not mean that Stantec approves the detailed design inherent in the shop drawing, responsibility for which shall remain with the Contractor submitting same, nor does this review mean that Stantec accepts any deviation of the shop drawing(s) from the contract documents. The Contractor is responsible for confirming all dimensions and correlating them at the job site, for all construction means, methods and techniques, and for coordination of construction work of all trades, including coordination of all shop drawings.

Stantec

☑ REVIEWED

☐ REVIEWED, AS NOTED

☐ REVISE AND RESUBMIT

☐ NOT REVIEWED

DATE 2019-01-02

BY pclyne

Review of this submission is for compliance with general intent of the contract. This review does not relieve the Sub-Contractor, Supplier or Manufacturer of responsibility for error or omissions in the submission or the responsibility of meeting all requirements of the contract documents. Any deviation from the contract documents initiated by the Sub-Contractor, Supplier or Manufacturer shall be at their sole risk. QUANTITIES AND DETAIL DIMENSIONS ARE THE SUB-CONTRACTORS OR SUPPLIERS RESPONSIBILITY. VERIFY DATA WITH FIELD DIMENSIONS.

SUBMITTAL TRACKING No.: **STC-012**

2018-12-05

Marque	Quantité	Description	Longueur	Nuance	Finition	Poids	Poids total
P800	4						
p8000	4	PLT12.7x250x250	250.0	G40.21	Galvanisé	13.737	54.947
p8001	4	PLT12.7x50x150	150.0	G40.21	Galvanisé	2.588	10.354
	8					16.325	65.301
	8						65.301

4xHILTI HAS-E M16-150MM WITH HY-200 TYP.

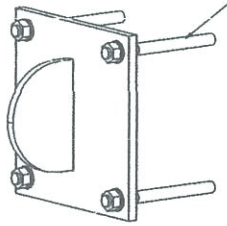

3D view

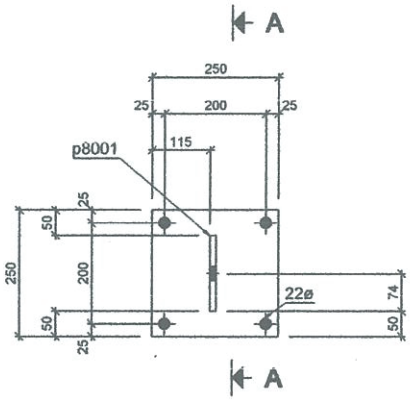

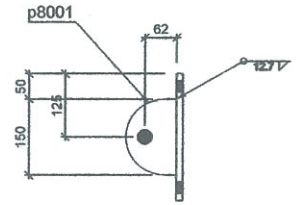

Section A - A

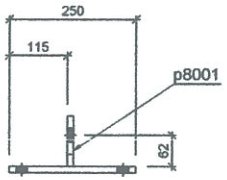

4 - P800 PLT12.7x250x250



Rev.	Date	Par	Description

Projet : FALL ARREST ANCHOR

No. Projet : MH.2018.0840_ST

Statut :	Commentaire :	
Détaillé par : MOISE HARVEY	Trou : 13/16"Ø u/n	Client : KUDLIK CONST.
Vérifié par: JEAN TRUDEAU	Soudure : E70XXELECT	No. Dessin : P800
STRUCTURES M.H. inc. ENTREPRENEUR GÉNÉRAL	Acier : G40.21	
	Peinture: Galvanisé	Sequence : 0
	Date : 2018 12 04	

Quantité | Description | Longueur | Finition

SUBMITTALS IDENTIFICATION SHEET

PROJECT: Wastewater Treatment Plant Upgrade
Iqaluit, Nunavut

NUNAMI
STANTEC LIMITED

1088C Noble House
Iqaluit NU
www.stantec.com

CONTRACTOR: Kudlik Construction Ltd, Project 2018-062

Telephone: 867-979-1166

E-mail: srousseau@kudlik.biz

SUBCONTRACTOR: Structure MH

Person responsible: Moise Harvey

Telephone: (418)487-8772 E-mail: structures.mh@gmail.com

PRODUCT SUBMITTED:

☑ As Specified

☐ Alternate

SUPPLIER or MANUFACTURER:

Person responsible:

Telephone: E-mail:

DESCRIPTION OF SUBMITTAL:

# of pages:

Reference to drawings:

Reference to specs:

Division: 05 Section: 05 12 23 - 05 21 00

REMARKS:

Floor MBBR

REVIEW AND COMMENTS (for use by Consultants):

STANTEC PROJECT #: 110126045 SUBMITTAL # STC-015

This review by Stantec is for general conformance with the design concept of Stantec's design of the:

☐ Architectural ☐ Electrical
☑ Structural ☐ Other
☐ Mechanical

component(s) only and does not mean that Stantec has verified or approves the shop drawing(s). The Contractor remains solely responsible for the shop drawing(s) and this review by Stantec does not relieve the Contractor of the Contractor's responsibility for errors or omissions in the shop drawing(s) or for meeting all requirements of the contract documents. This review does not mean that Stantec approves the detailed design inherent in the shop drawing, responsibility for which shall remain with the Contractor submitting same, nor does this review mean that Stantec accepts any deviation of the shop drawing(s) from the contract documents. The Contractor is responsible for confirming all dimensions and correlating them at the job site, for all construction means, methods and techniques, and for coordination of construction work of all trades, including coordination of all shop drawings.

Stantec

☐ REVIEWED

☑ REVIEWED, AS NOTED

☐ REVISE AND RESUBMIT

☐ NOT REVIEWED

DATE 2019-01-02

BY pclyne

Review of this submission is for compliance with general intent of the contract. This review does not relieve the Sub-Contractor, Supplier or Manufacturer of responsibility for error or omissions in the submission or the responsibility of meeting all requirements of the contract documents. Any deviation from the contract documents initiated by the Sub-Contractor, Supplier or Manufacturer shall be at their sole risk. QUANTITIES AND DETAIL DIMENSIONS ARE THE SUB-CONTRACTORS OR SUPPLIERS RESPONSIBILITY. VERIFY DATA WITH FIELD DIMENSIONS.

SUBMITTAL TRACKING No.: **STC-015**

2018-12-05

Ensure positions of beams have been coordinated with process.

Ensure positions of beams have been coordinated with mechanical

Anchors for angles are to be staggered each side of wall.

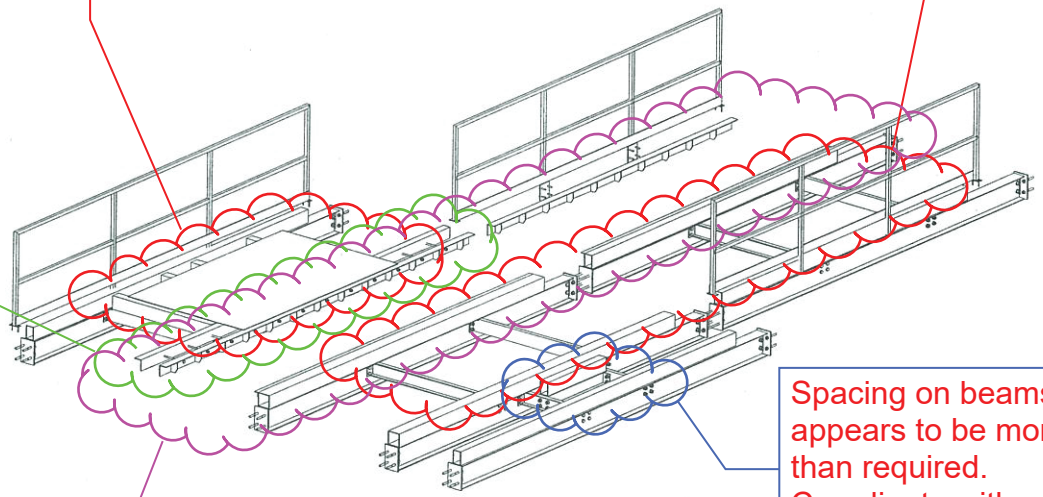

Spacing on beams appears to be more than required. Coordinate with contractor.

Grating to be removable in this area.

3D VIEW
FLOOR BETWEEN
AXE- D,F AND 2,3

REGISTERED PROFESSIONAL ENGINEER
TRUDEAU
01/12/18
NT/NU

PROJET :
IQALUIT
WASTEWATER
TREATMENT PLANT

-ALL STEEL IS GALVANIZED

CWB
ALL WELD ARE COMPLIANT WITH CWB

Rev.	Date	Par	Description

STRUCTURES M.H. inc.
ENTREPRENEUR GÉNÉRAL

Date : 2018-11-29

INGÉNIEUR :

Client :
Construction Gely

Projet :
Floor reinforcement

No. Projet :
MH-2018.0830_ST

Dessiné par :
Julie Lajoie

TITRE :
VIEW 3D FLOOR

No. Dessin
ST-00

Séquence
0

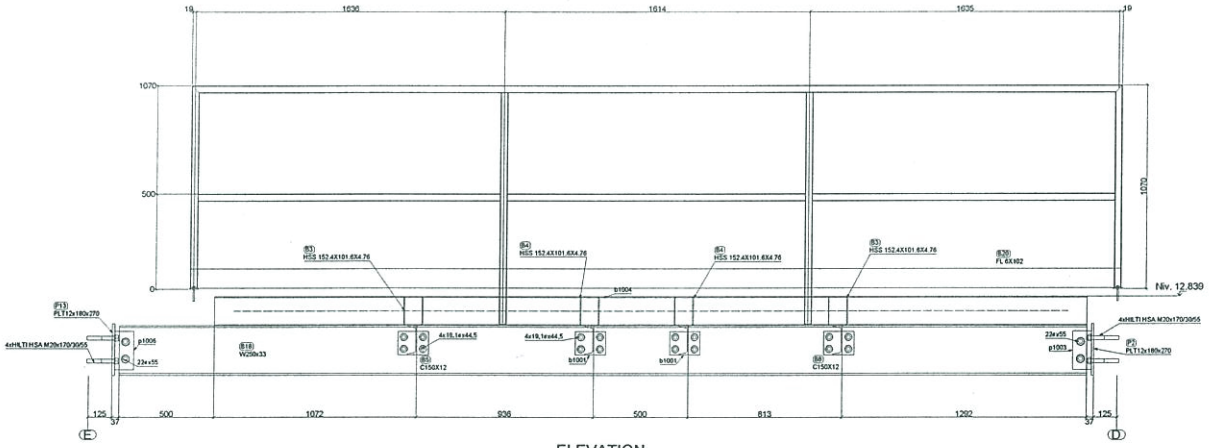

ELEVATION
DÉTAIL NO 1

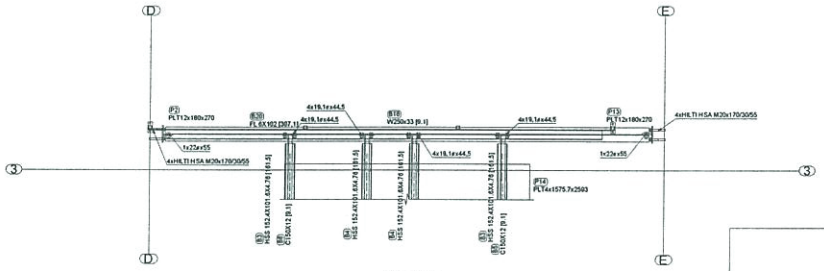

Plan view

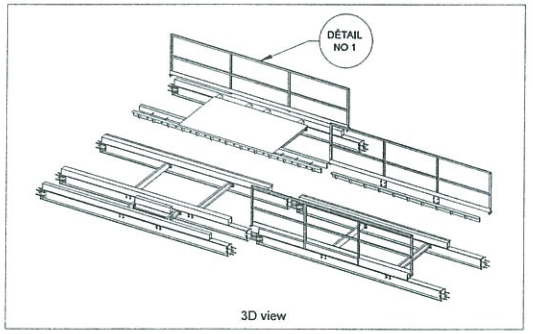

3D view

REGISTERED PROFESSIONAL ENGINEER
TRUDEAU
07/12/18
NT/NU

PROJET :
IQALUIT
WASTEWATER
TREATMENT PLANT

-ALL STEEL IS GALVANIZED

CWB certification.cwb

ALL WELD ARE COMPLIANT WITH CWB

Rev.	Date	Par	Description

STRUCTURES M.H. inc.
ENTREPRENEUR GÉNÉRAL
1670 Av. de la Technologie, Aéro. (QC) J2G
Téléphone : 418 453 2288 Télécopieur : 418 648 9295
structures.mh@gmail.com
RBQ : 5612-0215-01

Date : 2018-11-29

INGÉNIEUR : Jean trudeau

Construction Gely

Projet : Floor reinforcement

No. Projet : MH.2018.0839_ST

Détaillé par : Julie Lajoie

TITRE :
ELEVATION PLAN VIEW

Structure	ETABS/ELECT	No. Dessin	ST-01
Titre	13x61ft.pln		
Acier	300W,350W,350WCL,CAN/CSA G40.21		
Portique	Galvanisé Peint	Séquence	0

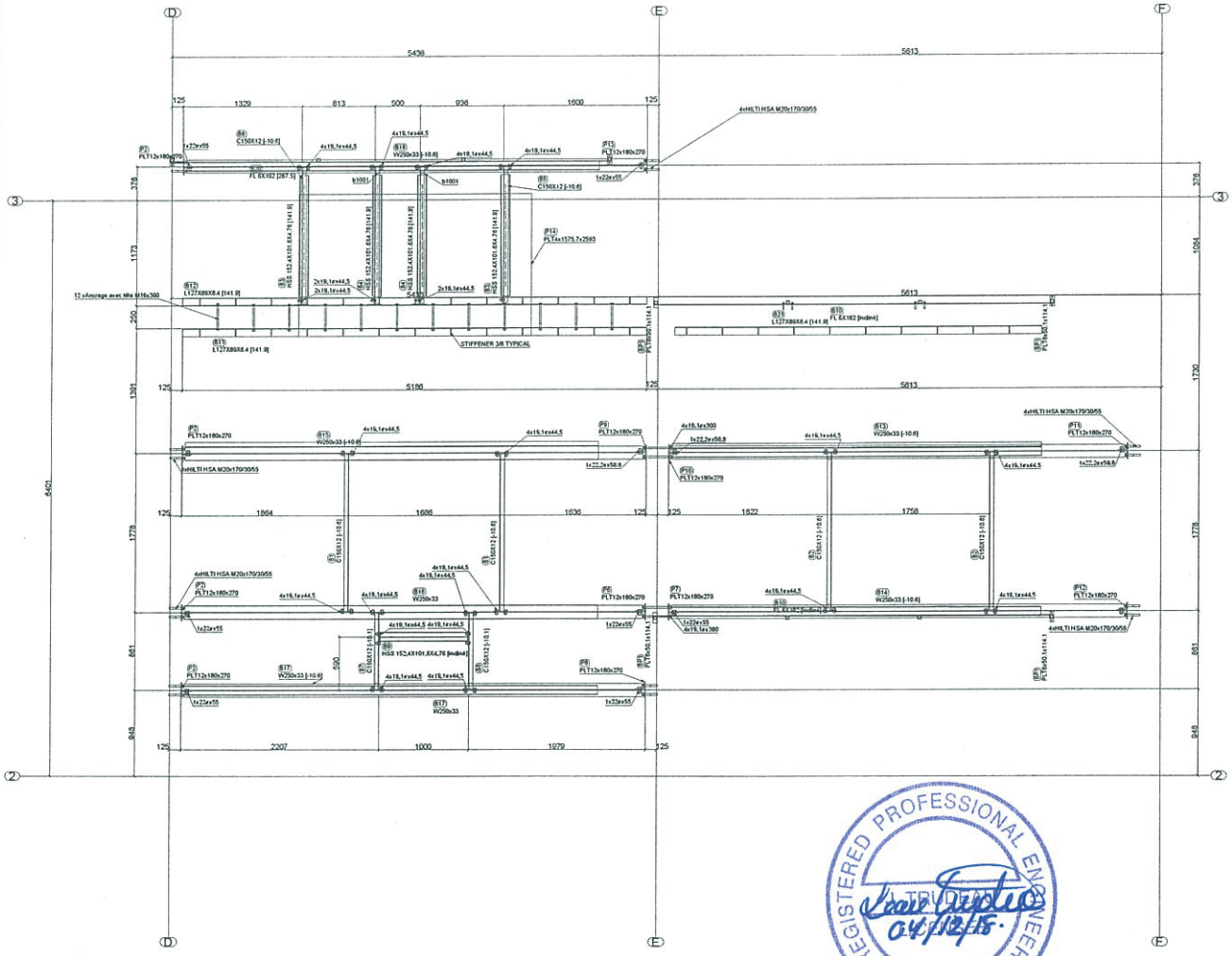

ELEVATION PLAN VIEW

REGISTERED PROFESSIONAL ENGINEER
NT/NU
04/12/18

PROJET :

IQALUIT
WASTEWATER
TREATMENT PLANT

-ALL STEEL IS GALVANIZED

ALL WELD ARE COMPLIANT WITH CWB

Rev.	Date	Par	Description

STRUCTURES M.H. inc.
ENTREPRENEUR GÉNÉRAL

Date : 2018-11-26

INGÉNIEUR :

Client : Construction Gely

Projet : Floor reinforcement

No. Projet : MH.2018.0839_ST

Détaillé par : Julie Lajoie

TITRE : ELEVATION PLAN VIEW

Nr. Dessin : ST-02

Sequence : 0

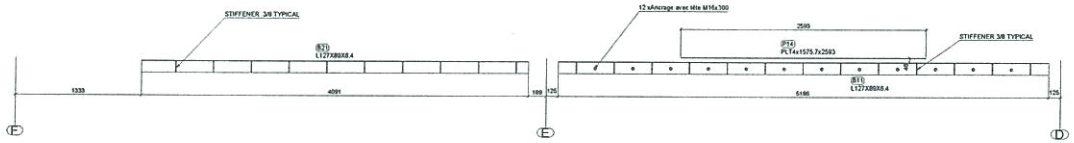

ÉLÉVATION
DÉTAIL NO 2

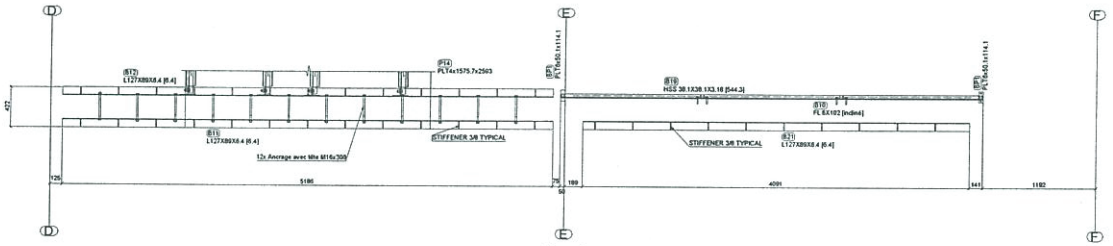

Plan view

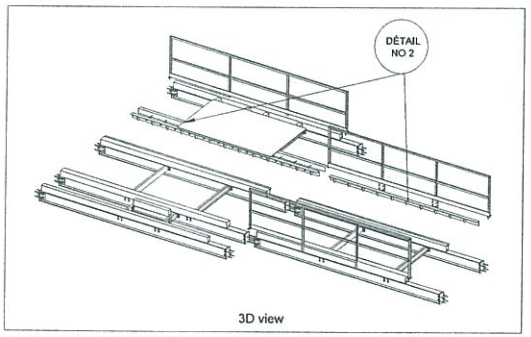

3D view

REGISTERED PROFESSIONAL ENGINEER
TRUDEAU
JEAN-LUC
04/12/18
NT/NU

PROJET :
IQALUIT
WASTEWATER
TREATMENT PLANT

-ALL STEEL IS GALVANIZED

ALL WELD ARE COMPLIANT WITH CWB

Rev.	Date	Par	Description

STRUCTURES M.H. inc.
ENTREPRENEUR GÉNÉRAL
5670 Av. de la Technologie, Alma QC G8C 1Z0
Téléphone : 418 463-2198 Télécopieur : 418 668-9295
structures.mh@qiwel.com
RBQ : 5642-0215-01

Date : 2018-11-27

INGÉNIEUR : Jean trudeau

Client : Construction Gely

Projet : Floor reinforcement

No. Projet : MH.2018.0630_ST

Détaillé par : Julie Lajoie

TITRE : ELEVATION PLAN VIEW

Soudure : ETHABUSCT
Titre : 191X18.stn
Acier : 300W,350W,CLC,D40.21
Peinture : Galvanisé Froid

No. Dessin : ST-03

Séquence : 0

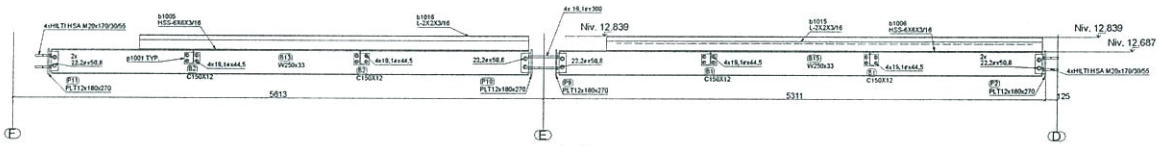

Elevation
Détail no 3

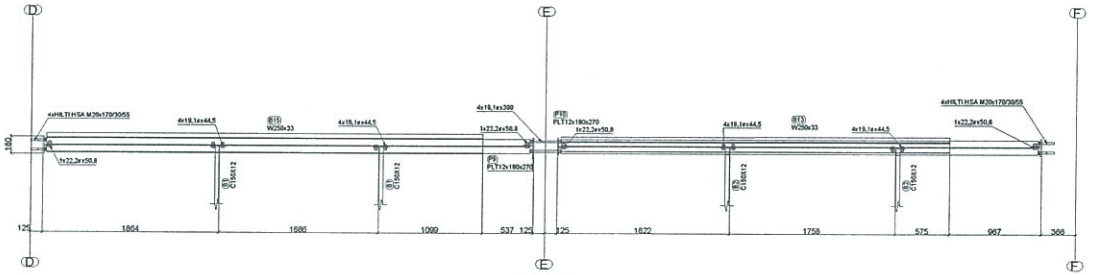

Elevation

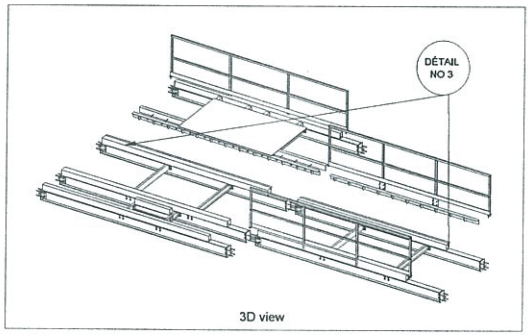

3D view

REGISTERED PROFESSIONAL ENGINEER
NT/NU

PROJET :

IQALUIT
WASTEWATER
TREATMENT PLANT

-ALL STEEL IS GALVANIZED

ALL WELD ARE COMPLIANT WITH CWB

Rev.	Date	Par	Description

STRUCTURES M.H. inc.
ENTREPRENEUR GÉNÉRAL

Date : 2018-11-27

INGÉNIEUR :

Client :
Construction Gely

Projet :
Floor reinforcement

No. Projet :
MH.2018.0839_ST

Détaillé par :
Julie Lajoie

TITRE :
ELEVATION PLAN VIEW

No. Dessin
ST-04

Séquence
0

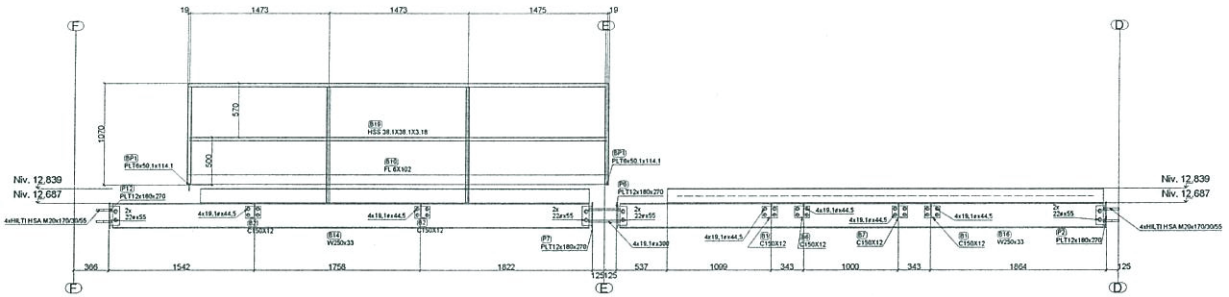

Elevation
Détail no 4

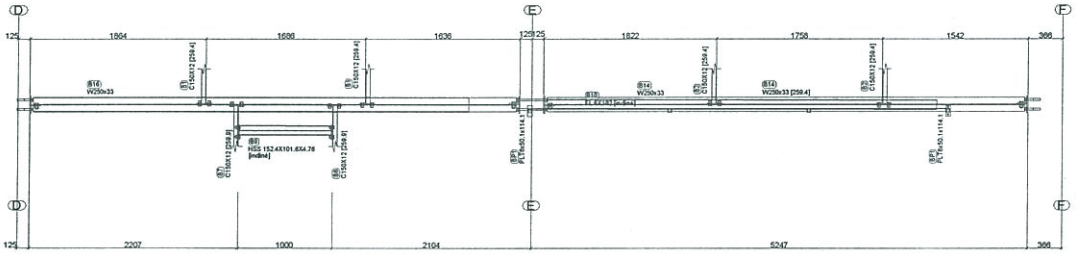

Plan view

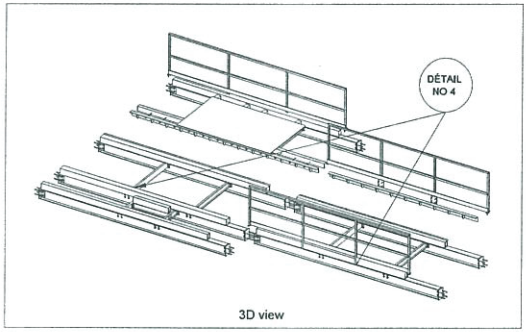

3D view

REGISTERED PROFESSIONAL ENGINEER
NT/NU
04/12/18

PROJET :

IQALUIT
WASTEWATER
TREATMENT PLANT

-ALL STEEL IS GALVANIZED

ALL WELD ARE COMPLIANT WITH CWB

Rev.	Date	Par	Description

STRUCTURES M.H. inc.
ENTREPRENEUR GÉNÉRAL

Date : 2018-11-27

INGÉNIEUR : Jean trudeau

Client : Construction Gely

Projet : Floor reinforcement

No. Projet : MH.2018.0639_ST

Détaillé par : Julie Lajoie

TITRE : ELEVATION PLAN VIEW

No. Dessin ST-05

Séquence 0

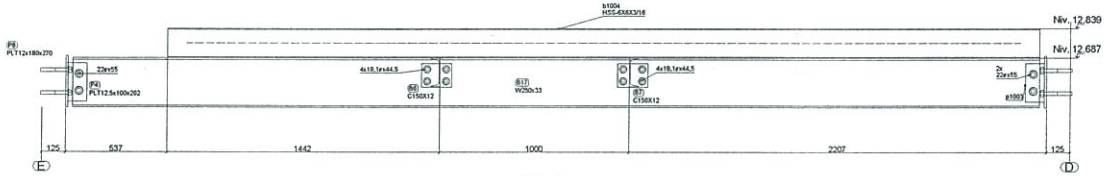

Elevation
Détail no 5

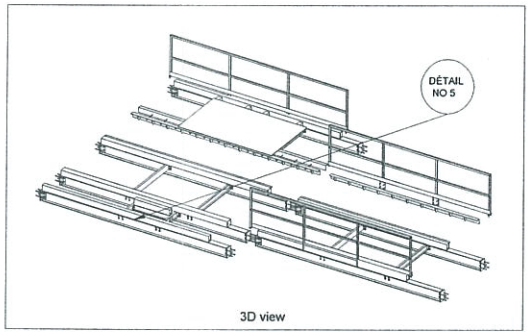

3D view

REGISTERED PROFESSIONAL ENGINEER
NT/NU

PROJET :

IQALUIT
WASTEWATER
TREATMENT PLANT

-ALL STEEL IS GALVANIZED

ALL WELD ARE COMPLIANT WITH CWB

Rev.	Date	Par	Description

STRUCTURES M.H. inc.
ENTREPRENEUR GÉNÉRAL

Date : 2018-11-27

INGÉNIEUR :

Client :
Construction Gely

Projet :
Floor reinforcement

No. Projet :
MH.2018.0839_ST

Détaillé par :
Julie Lajoie

TITRE :
ELEVATION PLAN VIEW

No. Dessin
ST-06

Séquence
0

Marque	Quantité	Description	Longueur	Nuance	Finition	Poids	Poids total
B1	2	Renfort d'âme					
b1003	2	C150X12	1751.9	300W	Galvanisé	46.347	92.695
p1001	4	PLT10x123x161	161.0	G40.21	Galvanisé	3.427	13.709
	6					53.202	106.403
	6						106.403



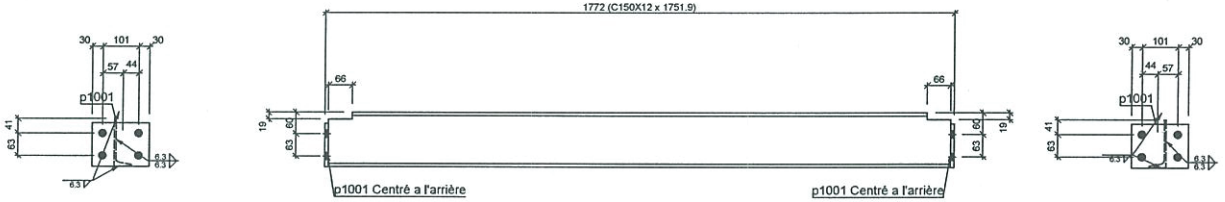

2 - B1 C150X12

d=152 b=48 t=8.7 w=5.1 k=18.4

Grid reference (/E), (/)

REGISTERED PROFESSIONAL ENGINEER
NT/NU
04/12/18

Rev.	Date	Par	Description

Projet : Floor reinforcement

No. Projet : MH.2018.0839_ST

Statut :	Commentaire :	
Détaillé par : Julie Lajoie	Trou : 13/16"Ø u/n	Client Construction Gely
Vérifié par: Jean trudeau	Soudure : E70XXELECT	No. Dessin : B1
STRUCTURES M.H. Inc ENTREPRENEUR GÉNÉRAL	Acier : 300W	
	Peinture: Galvanisé	Sequence : 0
	Date : 2018-11-27	

Marque	Quantité	Description	Longueur	Nuance	Finition	Poids	Poids total
B2	2	Renfort d'âme					
b1002	2	C150X12	1751.9	300W	Peint	46.347	92.695
p1001	4	PLT10x123x161	161.0	G40.21	Galvanisé	3.427	13.709
	6					53.202	106.403
	6						106.403

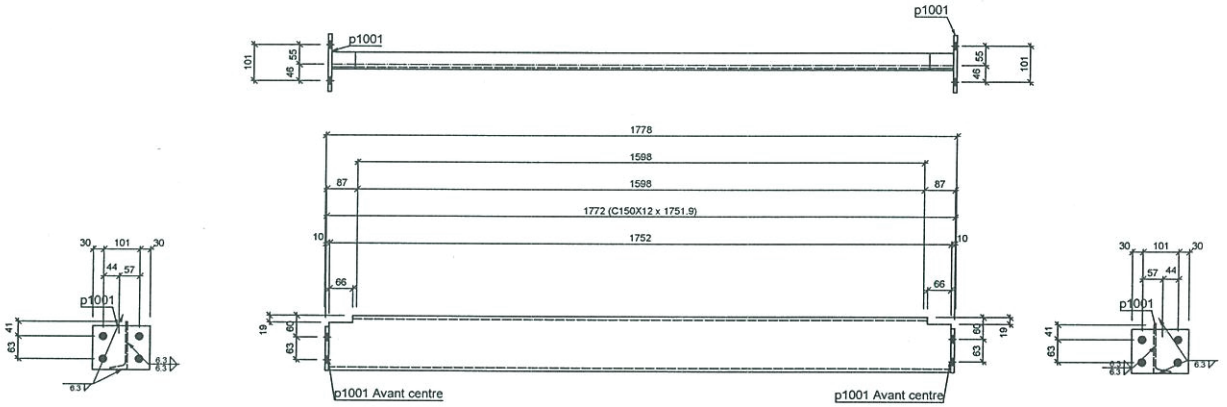

2 - B2 C150X12

d=152 b=48 t=8.7 w=5.1 k=18.4

Grid reference (/), (/)



Rev.	Date	Par	Description

Projet : Floor reinforcement

No. Projet : MH.2018.0839_ST

Statut :	Commentaire :	
Détaillé par : Julie Lajoie	Trou : 13/16"Ø u/n	Client : Construction Gely
Vérifié par: Jean trudeau	Soudure : E70XXELECT	No. Dessin : B2
STRUCTURES M.H. Inc ENTREPRENEUR GÉNÉRAL	Acier : 300W	
	Peinture: Peint	Sequence : 0
	Date : 2018-11-27	

Marque	Quantité	Description	Longueur	Nuance	Finition	Poids	Poids total
B3	2						
b1000	2	HSS 152.4X101.6X4.76	1348.1	350W-CL.C	Galvanisé	53.496	106.992
	2					53.496	106.992
	2						106.992

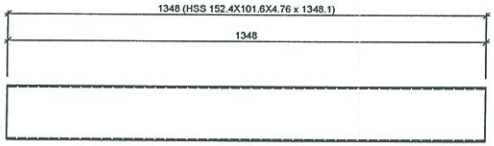

2 - B3 HSS 152.4X101.6X4.76

d=152.4 b=101.6 t=4.8 w=4.8 k=

Grid reference (3/D), (3/E)

REGISTERED PROFESSIONAL ENGINEER
NT/NU

Rev.	Date	Par	Description

Projet : Floor reinforcement

No. Projet : MH.2018.0839_ST

Statut :	Commentaire :		
Détaillé par : Julie Lajoie	Trou : 13/16"O u/n	Client: construction Gely	
Vérifié par: Jean trudeau	Soudure : E70XXELECT	No. Dessin :	
STRUCTURES M.H. Inc ENTREPRENEUR GÉNÉRAL	Acier : 350W-CL.C	B3	
	Peinture: Galvanisé	Sequence :	0
	Date : 2018-11-27		

Marque	Quantité	Description	Longueur	Nuance	Finition	Poids	Poids total
B4	2						
b1000	2	HSS 152.4X101.6X4.76	1348.1	350W-CL.C	Galvanisé	53.496	106.992
b1001	2	C150X12	1510.9	300W	Galvanisé	39.973	79.946
p1001	2	PLT10x123x161	161.0	G40.21	Galvanisé	3.427	6.854
	6					96.896	193.792
	6						193.792

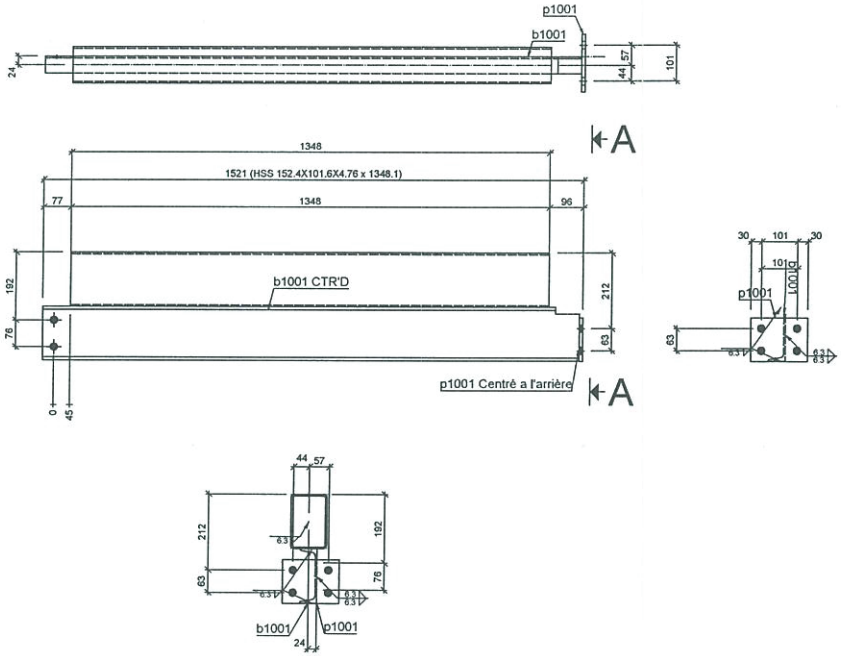

Section A - A

2 - B4 HSS 152.4X101.6X4.76

d=152.4 b=101.6 t=4.8 w=4.8 k=

Grid reference (3/), (3/)

REGISTERED PROFESSIONAL ENGINEER
TRUDEAU
LICENCE
04/12/18
NT/NU

Rev.	Date	Par	Description

Projet : Floor reinforcement

No. Projet : MH.2018.0839_ST

Statut :	Commentaire :	
Détaillé par : Julie Lajoie	Trou : 13/16"Ø u/n	Client construction Gely
Vérifié par: Jean trudeau	Soudure : E70XXELECT	No. Dessin : B4
STRUCTURES M.H. Inc ENTREPRENEUR GÉNÉRAL	Acier : 350W-CL.C	
	Peinture: Galvanisé	Sequence : 0
	Date : 2018-11-27	

Marque	Quantité	Description	Longueur	Nuance	Finition	Poids	Poids total
B5	1						
b1007	1	C150X12	1510.9	300W	Peint	39.973	39.973
p1001	1	PLT10x123x161	161.0	G40.21	Galvanisé	3.427	3.427
	2					43.400	43.400
	2						43.400

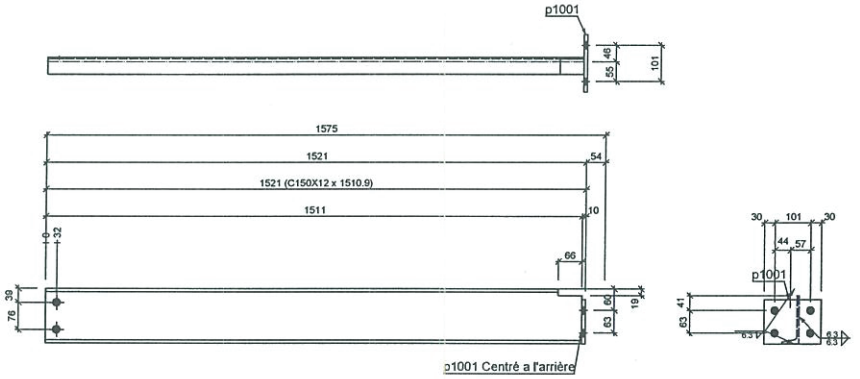

1 - B5 C150X12

d=152 b=48 t=8.7 w=5.1 k=18.4

Grid reference (3/E)

REGISTERED PROFESSIONAL ENGINEER
LICENSED
NT/NU
13/12/18

Rev.	Date	Par	Description

Projet : Floor reinforcement

No. Projet : MH.2018.0839_ST

Statut :	Commentaire :	
Détaillé par : Julie Lajoie	Trou : 13/16"Ø u/n	Client Construction Gely
Vérifié par: Jean trudeau	Soudure : E70XXELECT	No. Dessin : B5
STRUCTURES M.H. inc ENTREPRENEUR GÉNÉRAL	Acier : 300W	
	Peinture: Peint	Sequence : 0
	Date : 2018-11-27	

Marque	Quantité	Description	Longueur	Nuance	Finition	Poids	Poids total
B6	1						
b1009	1	C150X12	834.9	300W	Galvanisé	22.088	22.088
p1001	2	PLT10x123x161	161.0	G40.21	Galvanisé	3.427	6.854
	3					28.942	28.942
	3						28.942

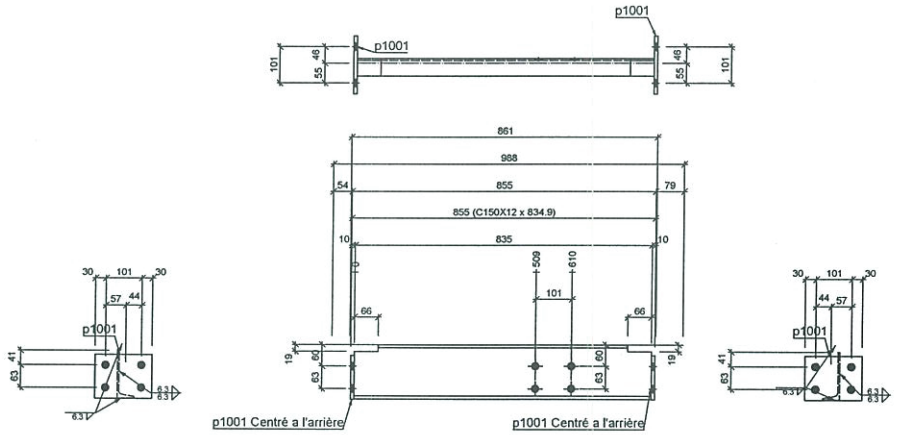

1 - B6 C150X12

d=152 b=48 t=8.7 w=5.1 k=18.4

Grid reference (2/)



Rev.	Date	Par	Description

Projet : Floor reinforcement

No. Projet : MH.2018.0839_ST

Statut :	Commentaire :	
Détaillé par : Julie Lajoie	Trou : 13/16"Ø u/n	Client : Construction Gely
Vérifié par: Jean trudeau	Soudure : E70XXELECT	No. Dessin : B6
STRUCTURES M.H. inc ENTREPRENEUR GÉNÉRAL	Acier : 300W	
	Peinture: Galvanisé	Sequence : 0
	Date : 2018-11-27	

Marque	Quantité	Description	Longueur	Nuance	Finition	Poids	Poids total
B7	1						
b1010	1	C150X12	834.9	300W	Galvanisé	22.088	22.088
p1001	2	PLT10x123x161	161.0	G40.21	Galvanisé	3.427	6.854
	3					28.942	28.942
	3						28.942

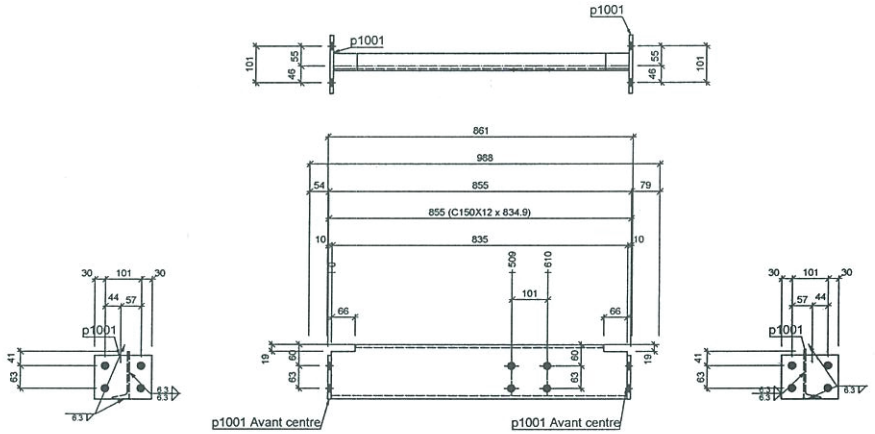

1 - B7 C150X12

d=152 b=48 t=8.7 w=5.1 k=18.4

Grid reference (2/)



Rev.	Date	Par	Description

Projet : Floor reinforcement

No. Projet : MH.2018.0839_ST

Statut :	Commentaire :	
Détaillé par : Julie Lajoie	Trou : 13/16"Ø u/n	Client : Construction Gely
Vérifié par: Jean Trudeau	Soudure : E70XXELECT	No. Dessin : B7
STRUCTURES M.H. Inc. ENTREPRENEUR GÉNÉRAL	Acier : 300W	
	Peinture: Galvanisé	Sequence : 0
	Date : 2018-11-27	

Marque	Quantité	Description	Longueur	Nuance	Finition	Poids	Poids total
B8	1						
b1001	1	C150X12	1510.9	300W	Galvanisé	39.973	39.973
p1001	1	PLT10x123x161	161.0	G40.21	Galvanisé	3.427	3.427
	2					43.400	43.400
	2						43.400

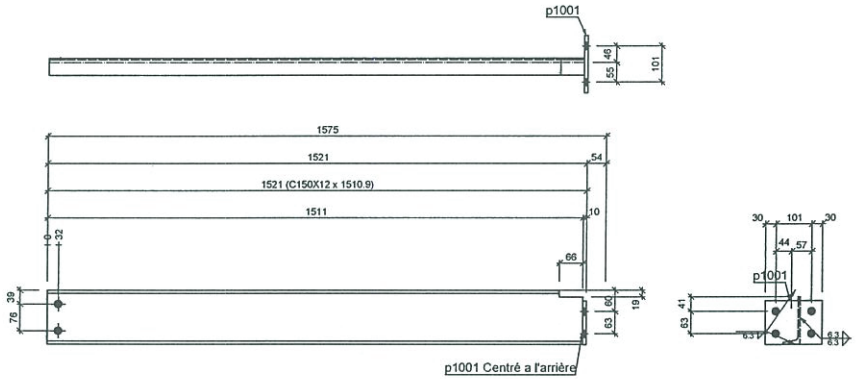

1 - B8 C150X12

d=152 b=48 t=8.7 w=5.1 k=18.4

Grid reference (3/D)



Rev.	Date	Par	Description

Projet : Floor reinforcement

No. Projet : MH.2018.0839_ST

Statut :	Commentaire :	
Détaillé par : Julie Lajoie	Trou : 13/16"Ø u/n	Client Construction Gely
Vérifié par: Jean trudeau	Soudure : E70XXELECT	No. Dessin : B8
STRUCTURES M.H. inc. ENTREPRENEUR GÉNÉRAL	Acier : 300W	
	Peinture: Galvanisé	Sequence : 0
	Date : 2018-11-27	

Marque	Quantité	Description	Longueur	Nuance	Finition	Poids	Poids total
B9	1						
b1011	1	HSS 152.4X101.6X4.76	976.2	350W-CL.C	Galvanisé	38.738	38.738
b1008	1	C150X12	980.0	300W	Peint	25.926	25.926
p1001	2	PLT10x123x161	161.0	G40.21	Galvanisé	3.427	6.854
	4					71.519	71.519
	4						71.519

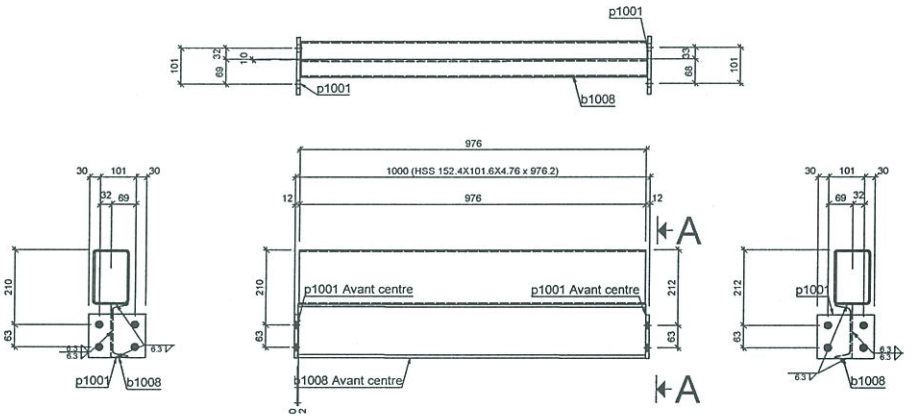

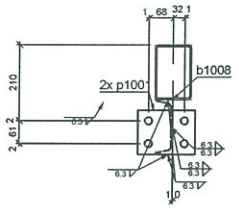

Section A - A

1 - B9 HSS 152.4X101.6X4.76

d=152.4 b=101.6 t=4.8 w=4.8 k=

Grid reference (/)

REGISTERED PROFESSIONAL ENGINEER
NT/NU

Rev.	Date	Par	Description

Projet : Floor reinforcement

No. Projet : MH.2018.0839_ST

Statut :	Commentaire :		
Détaillé par : Julie Lajoie	Trou : 13/16"Ø u/n	Client : Construction Gely	
Vérifié par: Jean trudeau	Soudure : E70XXELECT	No. Dessin : B9	
STRUCTURES M.H. inc ENTREPRENEUR GÉNÉRAL	Acier : 350W-CL.C		
	Peinture: Galvanisé	Sequence :	0
	Date : 2018-11-27		

Marque	Quantité	Description	Longueur	Nuance	Finition	Poids	Poids total
B10	1	Arrêt					
b1014	1	L127X89X6.4	5058.0	300W	Galvanisé	114.855	114.855
p1000	13	PLT9x82.5x120.7	120.7	G40.21	Galvanisé	1.422	18.485
	14					133.340	133.340
	14						133.340

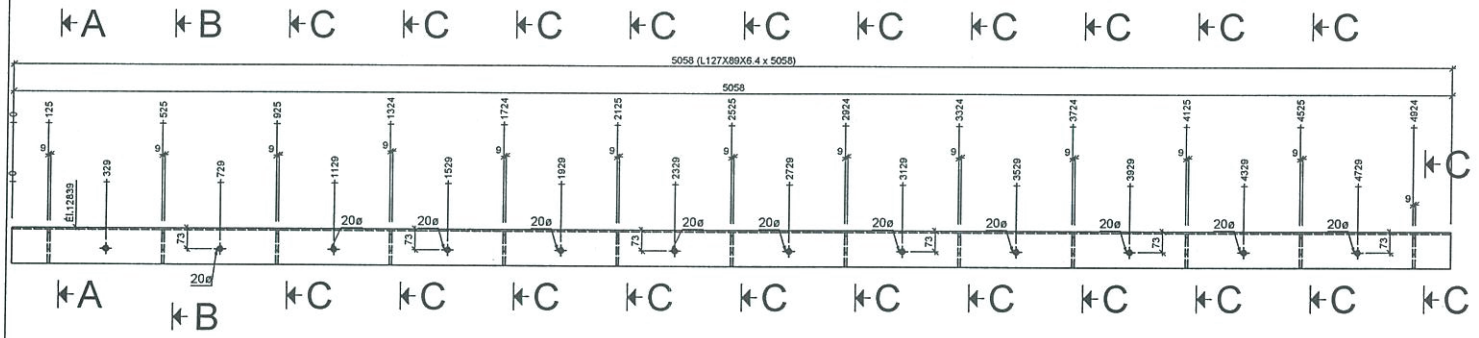

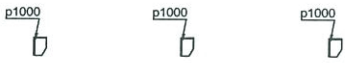

Section A - A Section B - B Section C - C

1 - B10 L127X89X6.4

d=127 b=88.9 t=6.3 w=6.3 k=

Grid reference (E/)/(F/)

REGISTERED PROFESSIONAL ENGINEER
NT/NU
09/12/18

Rev.	Date	Par	Description

Projet : Floor reinforcement

No. Projet : MH.2018.0839_ST

Statut :	Commentaire :	
Détaillé par : Julie Lajoie	Trou : 13/16"Ø u/n	Client:Construction Gely
Vérifié par: Jean trudeau	Soudure : E70XXELECT	No. Dessin : B10
STRUCTURES M.H. inc. ENTREPRENEUR GÉNÉRAL	Acier : 300W	
	Peinture: Galvanisé	Sequence : 0
	Date : 2018-11-27	

Marque	Quantité	Description	Longueur	Nuance	Finition	Poids	Poids total
B11	1	Arrêt					
b1013	1	L127X89X6.4	5186.0	300W	Galvanisé	117.762	117.762
p1000	13	PLT9x82.5x120.7	120.7	G40.21	Galvanisé	1.422	18.485
	14					136.246	136.246
	14						136.246

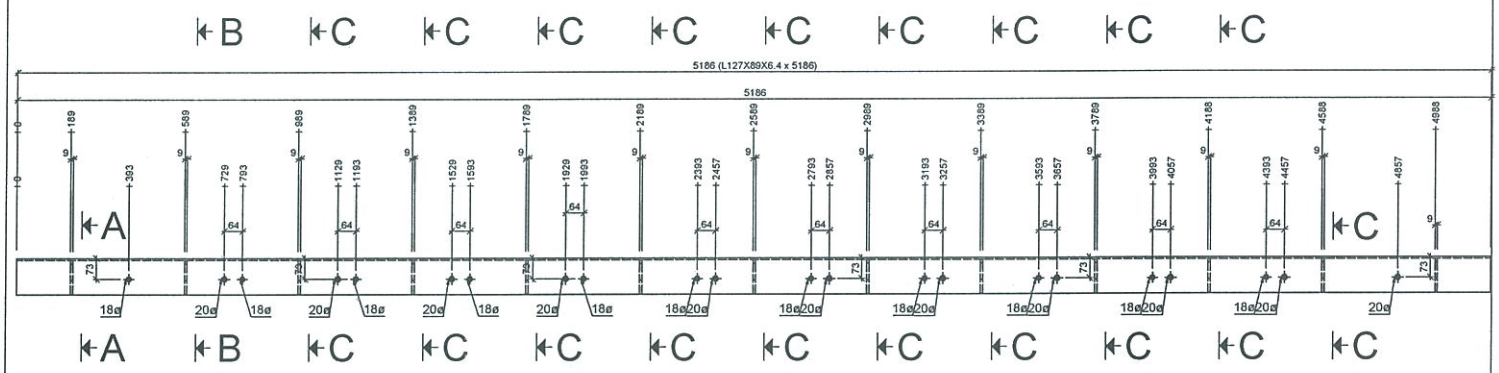



Section A - A Section B - B Section C - C Section D - D



1 - B11 L127X89X6.4

d=127 b=88.9 t=6.3 w=6.3 k=0

Grid reference (D/)/(E/)

Rev.	Date	Par	Description

Projet : Floor reinforcement

No. Projet : MH.2018.0839_ST

Statut :	Commentaire :	
Détaillé par : Julie Lajoie	Trou : 13/16"Ø u/n	Client: Construction Gely
Vérifié par: Jean trudeau	Soudure : E70XXELECT	No. Dessin : B11
STRUCTURES M.H. inc. ENTREPRENEUR GÉNÉRAL	Acier : 300W	
	Peinture: Galvanisé	Sequence : 0
	Date : 2018-11-27	

Marque	Quantité	Description	Longueur	Nuance	Finition	Poids	Poids total
B12	1	Arrêt					
b1012	1	L127X89X6.4	5186.0	300W	Galvanisé	117.762	117.762
	1					117.762	117.762
	1						117.762

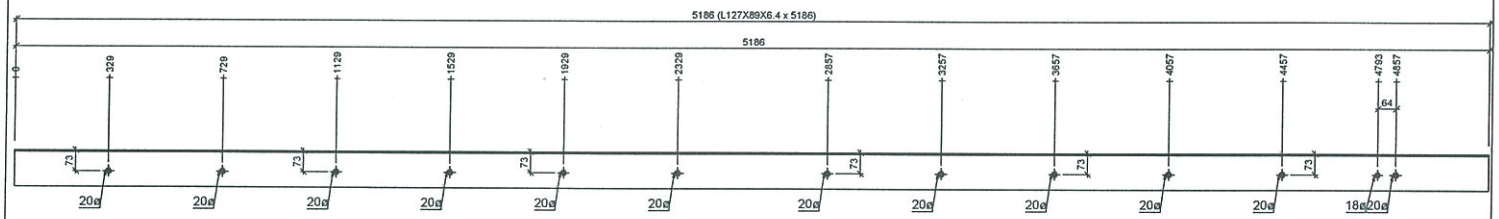

1 - B12 L127X89X6.4

d=127 b=88.9 t=6.3 w=6.3 k=

Grid reference (D/3)/(E/3)

REGISTERED PROFESSIONAL ENGINEER
TRUDEAU
NT/NU

Rev.	Date	Par	Description

Projet : Floor reinforcement

No. Projet : MH.2018.0839_ST

Statut :	Commentaire :	
Détaillé par : Julie Lajoie	Trou : 13/16"Ø u/n	Client: construction Gely
Vérifié par: Jean trudeau	Soudure : E70XXELECT	No. Dessin : B12
STRUCTURES M.H. inc. ENTREPRENEUR GÉNÉRAL	Acier : 300W	
	Peinture: Galvanisé	Sequence : 0
	Date : 2018-11-27	

Marque	Quantité	Description	Longueur	Nuance	Finition	Poids	Poids total
B13	1	Poutre					
b1021	1	W250x33	5048.0	350W	Galvanisé	363.916	363.916
b1005	1	HSS 152.4X101.6X4.76	4118.0	350W-CL.C	Galvanisé	163.416	163.416
b1016	1	L51X51X4.8	4118.0	300W	Peint	32.683	32.683
	3					560.015	560.015
	3						560.015

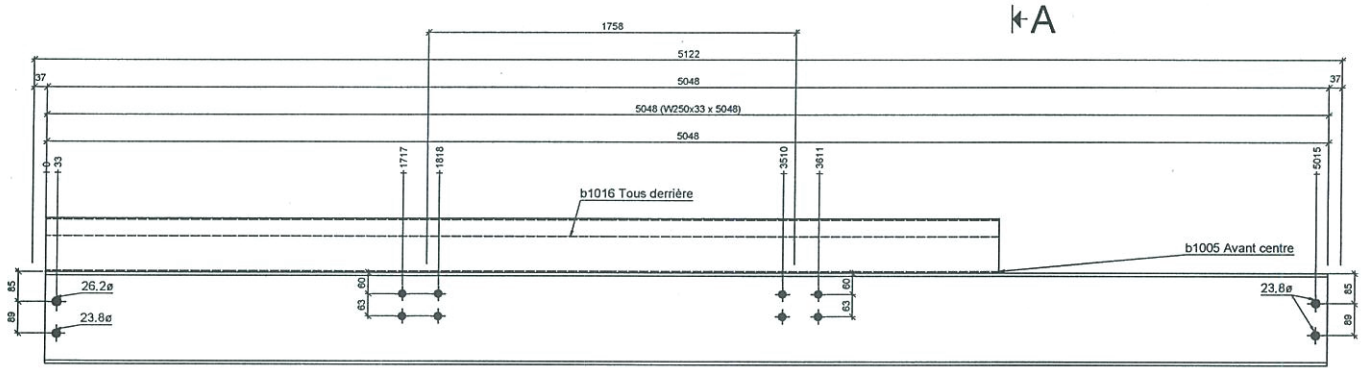

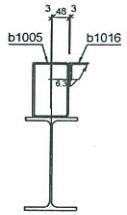

Section A - A

1 - B13 W250x33

d=258 b=146 t=9.1 w=6.1 k=23

Grid reference (E/)/(F/)

REGISTERED PROFESSIONAL ENGINEER
JEAN TRUDEAU
07/12/18
NT/NU

Rev.	Date	Par	Description

Projet : Floor reinforcement No. Projet : MH.2018.0839_ST		
Statut :	Commentaire :	
Détaillé par : Julie Lajoie	Trou : 13/16"Ø u/n	Client : Construction Gely
Vérifié par: Jean trudeau	Soudure : E70XXELECT	No. Dessin : B13
STRUCTURES M.H. Inc ENTREPRENEUR GÉNÉRAL	Acier : 350W Peinture: Galvanisé Date : 2018-11-27	Sequence : 0

Marque	Quantité	Description	Longueur	Nuance	Finition	Poids	Poids total
B14	1	Poutre					
b1022	1	W250x33	5048.0	350W	Galvanisé	363.916	363.916
b1005	1	HSS 152.4X101.6X4.76	4118.0	350W-CL.C	Galvanisé	163.416	163.416
	2					527.332	527.332
	2						527.332

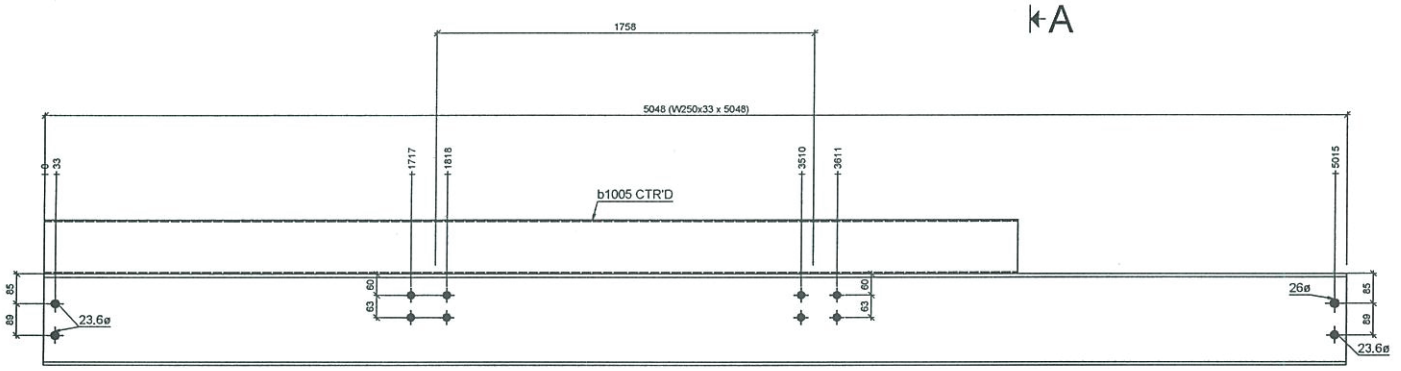



Section A - A

1 - B14 W250x33

d=258 b=146 t=9.1 w=6.1 k=23

Grid reference (E/)/(F/)

REGISTERED PROFESSIONAL ENGINEER
J.TRUDEAU
04/15/15
NT/NU

Rev.	Date	Par	Description

Projet : Floor reinforcement

No. Projet : MH.2018.0839_ST

Statut :	Commentaire :	
Détaillé par : Julie Lajoie	Trou : 13/16"Ø u/n	Client Construction Gely
Vérifié par: Jean trudeau	Soudure : E70XXELECT	No. Dessin : B14
STRUCTURES M.H. inc. ENTREPRENEUR GÉNÉRAL	Acier : 350W	
	Peinture: Galvanisé	Sequence : 0
	Date : 2018-11-27	

Marque	Quantité	Description	Longueur	Nuance	Finition	Poids	Poids total
B15	1	Poutre					
b1018	1	W250x33	5112.0	350W	Galvanisé	368.530	368.530
b1006	1	HSS 152.4X152.4X4.76	4612.0	350W-CL.C	Galvanisé	221.656	221.656
b1015	1	L51X51X4.8	4612.0	300W	Peint	36.604	36.604
	3					626.790	626.790
	3						626.790

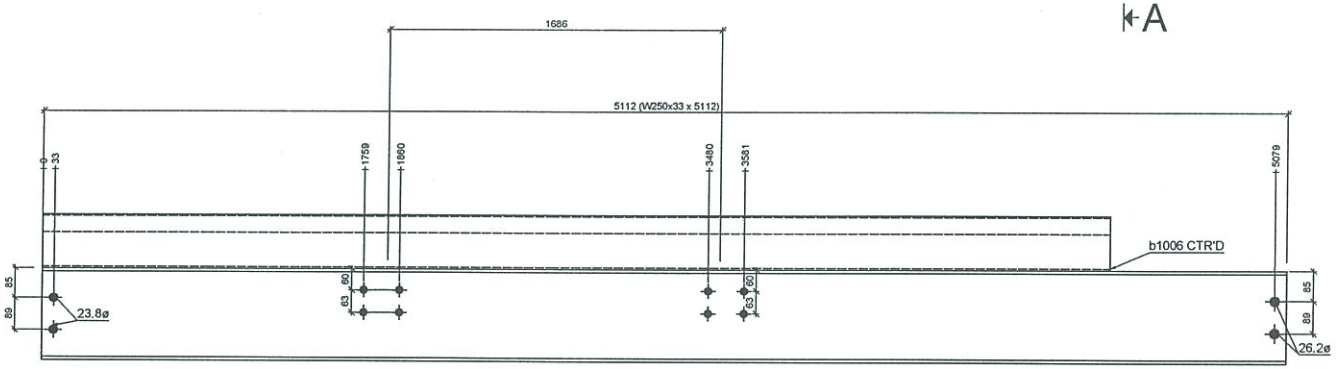

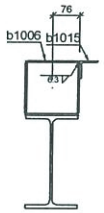

Section A - A

1 - B15 W250x33

d=258 b=146 t=9.1 w=6.1 k=23

Grid reference (D/)/(E/)

REGISTERED PROFESSIONAL ENGINEER
NT/NU
04/12/18

Rev.	Date	Par	Description

Projet : Floor reinforcement

No. Projet : MH.2018.0839_ST

Statut :	Commentaire :	
Détaillé par : Julie Lajoie	Trou : 13/16"Ø u/n	Client : Construction Gely
Vérifié par: Jean trudeau	Soudure : E70XXELECT	No. Dessin : B15
STRUCTURES M.H. inc. ENTREPRENEUR GÉNÉRAL	Acier : 350W	
	Peinture: Galvanisé	Sequence : 0
	Date : 2018-11-27	

Marque	Quantité	Description	Longueur	Nuance	Finition	Poids	Poids total
B16	1	Poutre					
b1019	1	W250x33	5112.0	350W	Galvanisé	368.530	368.530
b1006	1	HSS 152.4X152.4X4.76	4612.0	350W-CL.C	Galvanisé	221.656	221.656
	2					590.186	590.186
	2						590.186

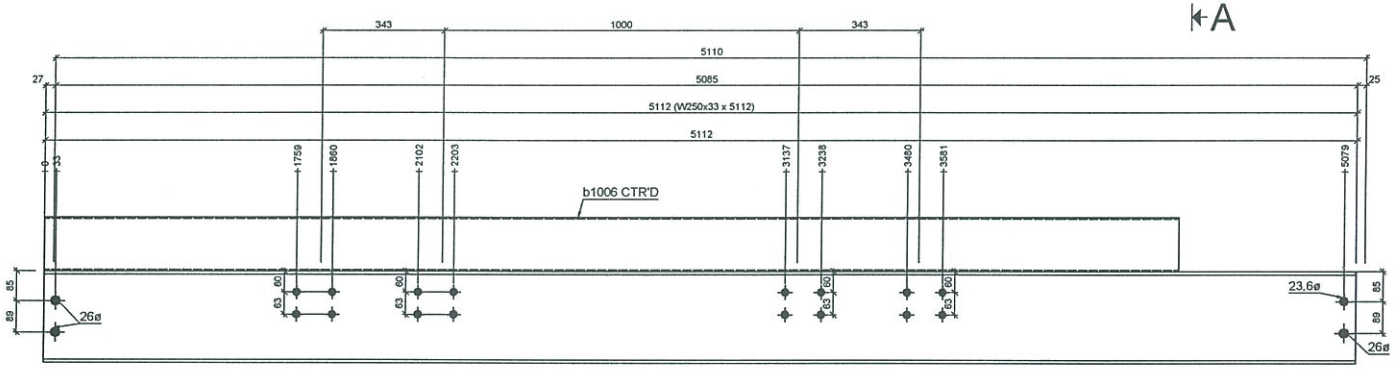

A

A



Section A - A

1 - B16 W250x33

d=258 b=146 t=9.1 w=6.1 k=23

Grid reference (D/)/(E/)

REGISTERED PROFESSIONAL ENGINEER
NT/NU
06/12/18

Rev.	Date	Par	Description

Projet : Floor reinforcement

No. Projet : MH.2018.0839_ST

Statut :	Commentaire :	
Détaillé par : Julie Lajoie	Trou : 13/16"Ø u/n	Client: construction Gely
Vérifié par: Jean trudeau	Soudure : E70XXELECT	No. Dessin : B16
STRUCTURES M.H. Inc ENTREPRENEUR GÉNÉRAL	Acier : 350W	
	Peinture: Galvanisé	Sequence : 0
	Date : 2018-11-27	

Marque	Quantité	Description	Longueur	Nuance	Finition	Poids	Poids total
B17	1						
b1017	1	W250x33	5112.0	350W	Galvanisé	368.530	368.530
b1004	1	HSS 152.4X101.6X4.76	4612.0	350W-CL.C	Galvanisé	183.019	183.019
	2					551.549	551.549
	2						551.549

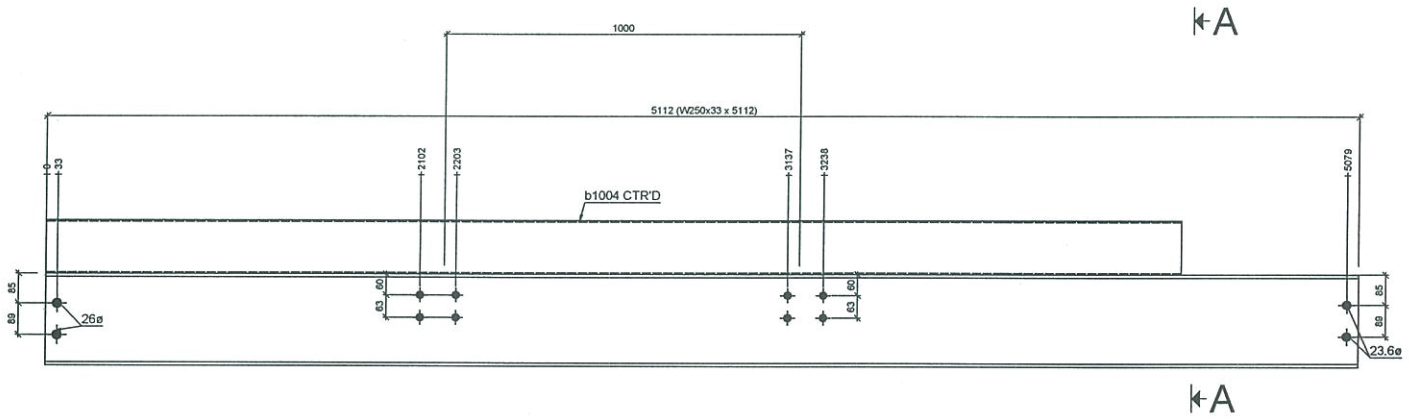

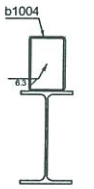

Section A - A

1 - B17 W250x33

d=258 b=146 t=9.1 w=6.1 k=23

Grid reference (D/2)/(E/2)

Rev.	Date	Par	Description

Projet : Floor reinforcement

No. Projet : MH.2018.0839_ST

Statut :	Commentaire :	
Détaillé par : Julie Lajoie	Trou : 13/16"Ø u/n	Client: Construction Gely
Vérifié par: Jean trudeau	Soudure : E70XXELECT	No. Dessin : B17
STRUCTURES M.H. Inc. ENTREPRENEUR GÉNÉRAL	Acier : 350W	
	Peinture: Galvanisé	Sequence : 0
	Date : 2018-11-27	

REGISTERED PROFESSIONAL ENGINEER NT/NU

Marque	Quantité	Description	Longueur	Nuance	Finition	Poids	Poids total
B18	1						
b1020	1	W250x33	5112.0	350W	Galvanisé	368.530	368.530
b1004	1	HSS 152.4X101.6X4.76	4612.0	350W-CL.C	Galvanisé	183.019	183.019
	2					551.549	551.549
	2						551.549

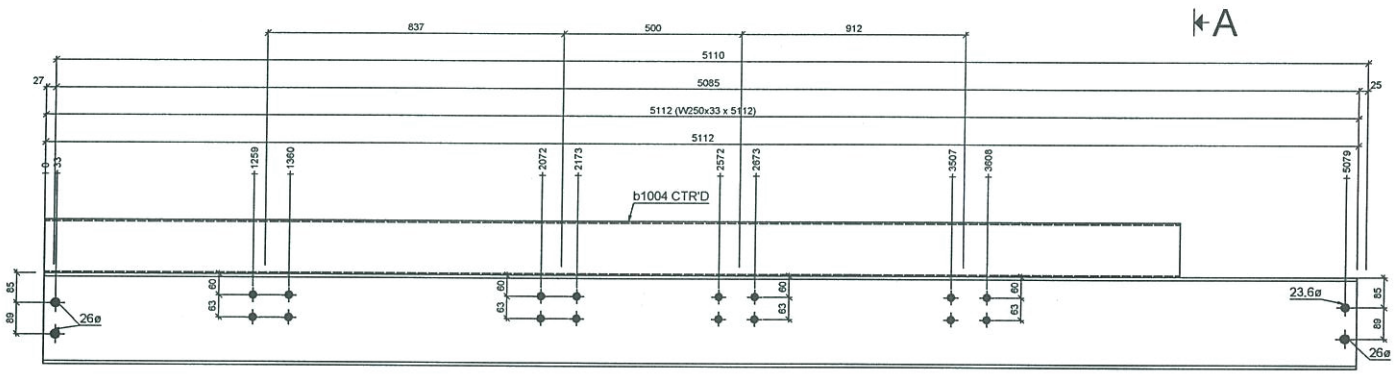



Section A - A

1 - B18 W250x33

d=258 b=146 t=9.1 w=6.1 k=23

Grid reference (D/3)/(E/3)

REGISTERED PROFESSIONAL ENGINEER
JEAN TRUDEAU
LICENSEE
NT/NU

Rev.	Date	Par	Description

Projet : Floor reinforcement

No. Projet : MH.2018.0839_ST

Statut :

Commentaire :

Détaillé par : Julio Lajoie

Trou : 13/16"Ø u/n

Client : Construction Gely

Vérifié par: Jean trudeau

Soudure : E70XXELECT

No. Dessin : B18

Acier : 350W

STRUCTURES M.H. Inc. ENTREPRENEUR GÉNÉRAL

Peinture: Galvanisé

Date : 2018-11-27

Sequence : 0

Marque	Quantité	Description	Longueur	Nuance	Finition	Poids	Poids total
B19	2						
b1023	2	HSS 38.1X38.1X3.18	4421.0	350W-CL.C	Galvanisé	32.164	64.328
	2					32.164	64.328
	2						64.328

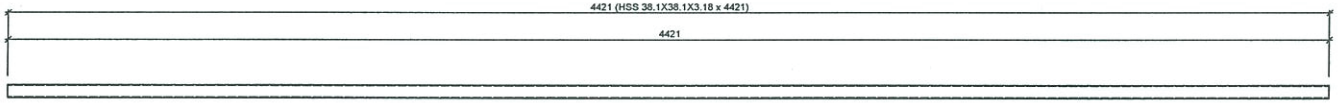

2 - B19 HSS 38.1X38.1X3.18

d=38.1 b=38.1 t=3.2 w=3.2 k=

Grid reference (E/)/(F/), (E/3)/(F/3)

REGISTERED PROFESSIONAL ENGINEER
NT/NU

Rev.	Date	Par	Description

Projet : Floor reinforcement

No. Projet : MH.2018.0839_ST

Statut :	Commentaire :	
Détaillé par : Julie Lajoie	Trou : 13/16"Ø u/n	Client Construction Gely
Vérifié par: Jean trudeau	Soudure : E70XXELECT	No. Dessin : B19
STRUCTURES M.H. INC. ENTREPRENEUR GÉNÉRAL	Acier : 350W-CL.C	
	Peinture: Galvanisé	Sequence : 0
	Date : 2018-11-28	

Marque	Quantité	Description	Longueur	Nuance	Finition	Poids	Poids total
B20	1						
b1024	1	FL 6X102	4923.0	300W	Galvanisé	54.967	54.967
	1					54.967	54.967
	1						54.967

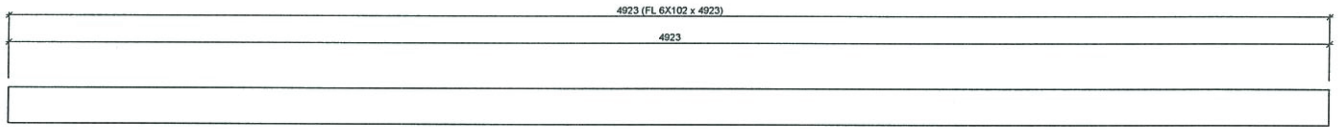

1 - B20 FL 6X102

d=101.6 b=6.3 t= w=6.3 k=

Grid reference (D/3)/(E/3)

REGISTERED PROFESSIONAL ENGINEER
NT/NU

Rev.	Date	Par	Description

Projet : Floor reinforcement No. Projet : MH.2018.0839_ST		
Statut :	Commentaire :	
Détaillé par : Julie Lajoie	Trou : 13/16"Ø u/n	Client: construction Gely
Vérifié par: Jean trudeau	Soudure : E70XXELECT	No. Dessin : B20
STRUCTURES M.H. inc ENTREPRENEUR GÉNÉRAL	Acier : 300W	
	Peinture: Galvanisé	Sequence : 0
	Date : 2018-11-28	

Marque	Quantité	Description	Longueur	Nuance	Finition	Poids	Poids total
B21	1	Arrêt					
b1025	1	L127X89X6.4	4090.9	300W	Galvanisé	92.895	92.895
p1000	10	PLT9x82.5x120.7	120.7	G40.21	Galvanisé	1.422	14.219
	11					107.114	107.114
	11						107.114

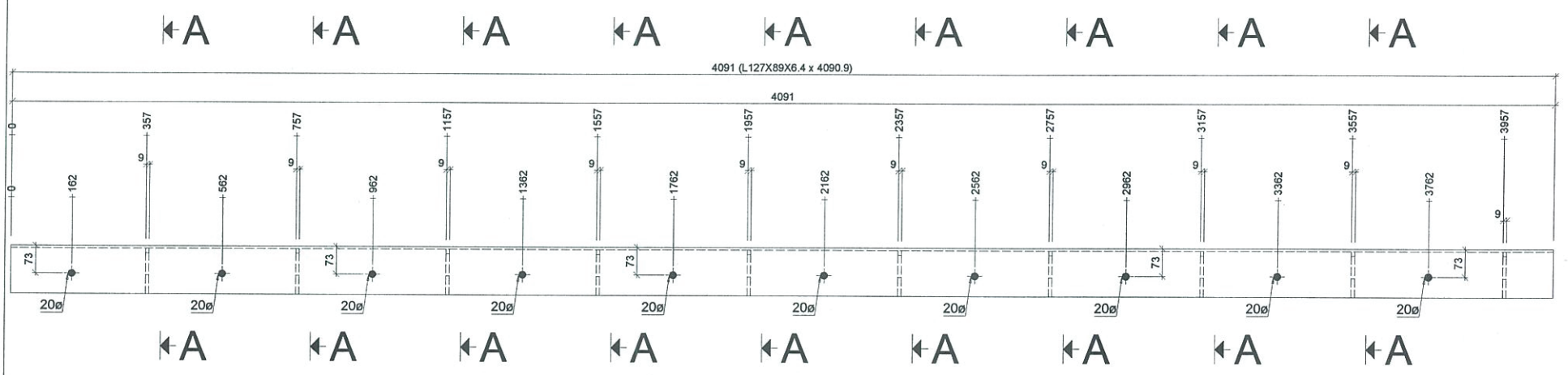



Section A - A

1 - B21 L127X89X6.4

d=127 b=88.9 t=6.3 w=6.3 k=

Grid reference (E/)/(F/)

REGISTERED PROFESSIONAL ENGINEER
NT/NU
04/12/18

Rev.	Date	Par	Description

Projet : Floor reinforcement

No. Projet : MH.2018.0839_ST

Statut :	Commentaire :	
Détaillé par : Julie Lajoie	Trou : 13/16"Ø u/n	Client : Construction Gely
Vérifié par: Jean trudeau	Soudure : E70XXELECT	No. Dessin : B21
STRUCTURES M.H. inc. ENTREPRENEUR GÉNÉRAL	Acier : 300W	
	Peinture: Galvanisé	Sequence : 0
	Date : 2018-11-28	

Marque	Quantité	Description	Longueur	Nuance	Finition	Poids	Poids total
BP1	4	Platine de pied de poteau					
bp1000	4	PLT6x50.1x114.1	114.1	G40.21	Galvanisé	0.594	2.374
	4					0.594	2.374
	4						2.374

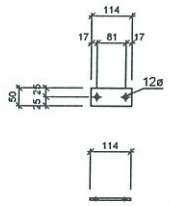

4 - BP1 PLT6x50.1x114.1

REGISTERED PROFESSIONAL ENGINEER
TRUDEAU
NT/NU

Rev.	Date	Par	Description

Projet : Floor reinforcement
No. Projet : MH.2018.0839_ST

Statut :	Commentaire :	
Détaillé par : Julie Lajoie	Trou : 13/16"Ø u/n	Client Construction Gely
Vérifié par: Jean trudeau	Soudure : E70XXELECT	No. Dessin : BP1
STRUCTURES M.H. inc. ENTREPRENEUR GÉNÉRAL	Acier : G40.21	
	Peinture: Galvanisé	Sequence : 0
	Date : 2018-11-28	

Marque	Quantité	Description	Longueur	Nuance	Finition	Poids	Poids total
M1	4	Garde-corps extémité					
m1001	4	HSS 38.1X38.1X3.18	1064.0	350W-CL.C	Galvanisé	7.741	30.963
	4					7.741	30.963
	4						30.963

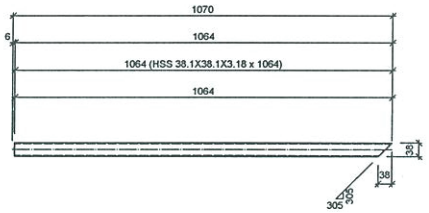

4 - M1 HSS 38.1X38.1X3.18

d=38.1 b=38.1 t=3.2 w=3.2 k=

Grid reference (F/), (F/3), (E/3), (E/)

REGISTERED PROFESSIONAL ENGINEER
TRUDEAU
NT/NU

Rev.	Date	Par	Description

Projet : Floor reinforcement

No. Projet : MH.2018.0839_ST

Statut :	Commentaire :		
Détaillé par : Julie Lajoie	Trou : 13/16"Ø u/n	Client:	Construction Gely
Vérifié par: Jean trudeau	Soudure : E70XXELECT	No. Dessin :	M1
STRUCTURES M.H. inc ENTREPRENEUR GÉNÉRAL	Acier : 350W-CL.C		
	Peinture: Galvanisé	Sequence :	0
	Date : 2018-11-28		

Marque	Quantité	Description	Longueur	Nuance	Finition	Poids	Poids total
M2	2	Garde-corps extémité					
m1002	2	HSS 38.1X38.1X3.18	4459.1	350W-CL.C	Galvanisé	32.441	64.883
	2					32.441	64.883
	2						64.883

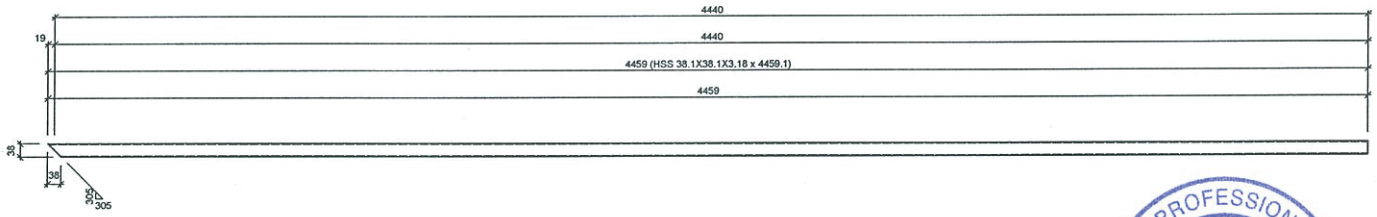

2 - M2 HSS 38.1X38.1X3.18

d=38.1 b=38.1 t=3.2 w=3.2 k=

Grid reference (E/)/(F/), (E/3)/(F/3)

REGISTERED PROFESSIONAL ENGINEER
NT/NU
Jean Trudeau
04/12/18

Rev.	Date	Par	Description

Projet : Floor reinforcement

No. Projet : MH.2018.0839_ST

Statut :	Commentaire :		
Détaillé par : Julie Lajoie	Trou : 13/16"Ø u/n	Client: Construction Gely	
Vérifié par: Jean trudeau	Soudure : E70XXELECT	No. Dessin :	M2
STRUCTURES M.H. inc. ENTREPRENEUR GÉNÉRAL	Acier : 350W-CL.C		
	Peinture: Galvanisé	Sequence :	0
	Date : 2018-11-28		

Marque	Quantité	Description	Longueur	Nuance	Finition	Poids	Poids total
M3	2	Garde-corps extémité					
m1000	2	HSS 38.1X38.1X3.18	1213.9	350W-CL.C	Galvanisé	8.831	17.663
p1016	2	PLT6x150x182	182.0	G40.21	Galvanisé	2.835	5.670
	4					11.666	23.332
	4						23.332

A

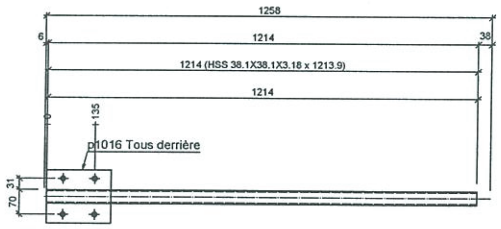

A

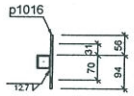

Section A - A

2 - M3 HSS 38.1X38.1X3.18

d=38.1 b=38.1 t=3.2 w=3.2 k=

Grid reference (E/3), (/3)

REGISTERED PROFESSIONAL ENGINEER
TRUDEAU
LICENSEE
04/12/18
NT/NU

Rev.	Date	Par	Description

Projet : Floor reinforcement

No. Projet : MH.2018.0839_ST

Statut :	Commentaire :	
Détaillé par : Julio Lajoie	Trou : 13/16"Ø u/n	Client: construction Gely
Vérifié par: Jean trudeau	Soudure : E70XXELECT	No. Dessin : M3
STRUCTURES M.H. inc. ENTREPRENEUR GÉNÉRAL	Acier : 350W-CL.C	
	Peinture: Galvanisé	Sequence : 0
	Date : 2018-11-28	

Marque	Quantité	Description	Longueur	Nuance	Finition	Poids	Poids total
M4	2	Garde-corps extémité					
m1000	2	HSS 38.1X38.1X3.18	1213.9	350W-CL.C	Galvanisé	8.831	17.663
	2					8.831	17.663
	2						17.663

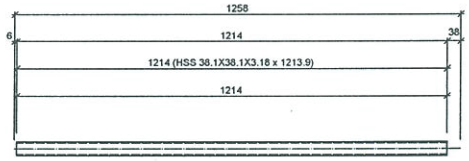

2 - M4 HSS 38.1X38.1X3.18

d=38.1 b=38.1 t=3.2 w=3.2 k=

Grid reference (E/), (/)

REGISTERED PROFESSIONAL ENGINEER
NT/NU

Rev.	Date	Par	Description

Projet : Floor reinforcement

No. Projet : MH.2018.0839_ST

Statut :	Commentaire :	
Détaillé par : Julie Lajoie	Trou : 13/16"O u/n	Client: Construction Gely
Vérifié par: Jean trudeau	Soudure : E70XXELECT	No. Dessin : M4
STRUCTURES M.H. inc. ENTREPRENEUR GÉNÉRAL	Acier : 350W-CL.C	
	Peinture: Galvanisé	Sequence : 0
	Date : 2018-11-28	

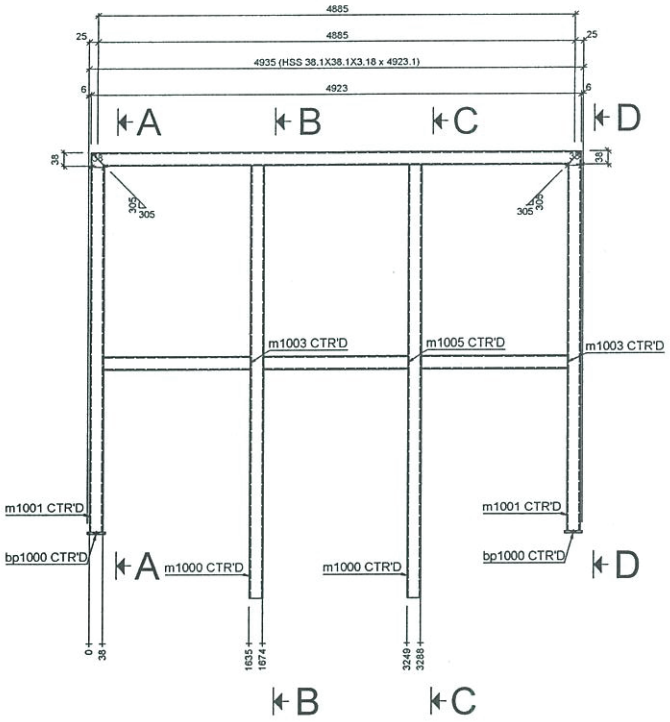

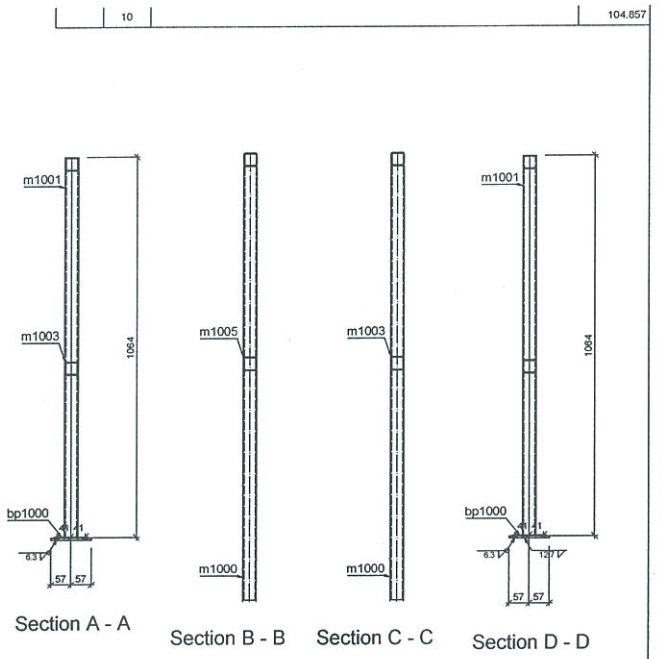

REGISTERED PROFESSIONAL ENGINEER
J. TRUDEAU
04/12/18
NT/NU

Rev.	Date	Par	Description

Projet : Floor reinforcement
No. Projet : MH.2018.0839_ST

Statut :	Commentaire :		
Détaillé par : Julie Lajoie	Trou : 13/16"Ø u/n	Client : Construction Gely	
Vérifié par: Jean trudeau	Soudure : E70XXELECT	No. Dessin : M5	
STRUCTURES M.H. inc. ENTREPRENEUR GÉNÉRAL	Acier : 350W-CL.C		
	Peinture: Galvanisé	Sequence :	0
	Date : 2018-11-28		

Marque	Quantité	Description	Longueur	Nuance	Finition	Poids	Poids total
M6	1						
b1026	1	FL 6X102	3230.0	300W		36.064	36.064
m1008	1	HSS 38.1X38.1X3.18	3230.0	350W-CL.C	Galvanisé	23.499	23.499
m1009	1	HSS 38.1X38.1X3.18	1181.9	350W-CL.C	Galvanisé	8.599	8.599
m1006	2	HSS 38.1X38.1X3.18	1025.9	350W-CL.C	Galvanisé	7.464	14.927
m1007	2	HSS 38.1X38.1X3.18	985.9	350W-CL.C	Galvanisé	7.173	14.346
bp1001	2	PL16x50.1x114.1	114.1	G40.21		0.594	1.187
	9					98.622	98.622
	9						98.622

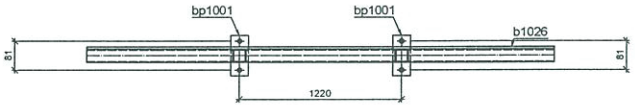

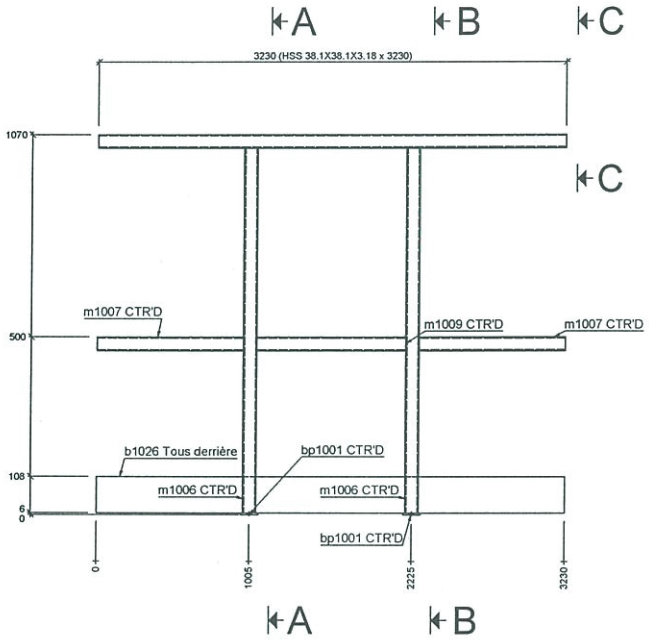

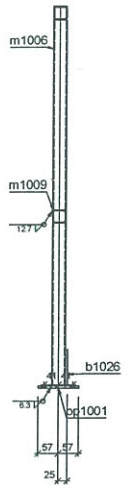

Section A - A

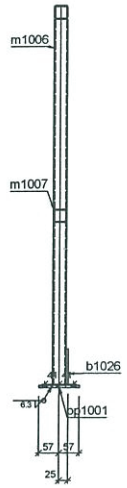

Section B - B

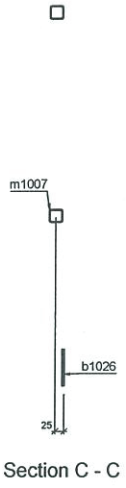

Section C - C



1 - M6 HSS 38.1X38.1X3.18
d=38.1 b=38.1 t=3.2 w=3.2 k=
Grid reference (/)

Rev.	Date	Par	Description

Projet : Floor reinforcement
No. Projet : MH.2018.0839_ST

Statut :	Commentaire :		
Détaillé par : Julie Lajoie	Trou : 13/16"O u/n	Client: Construction Gely	
Vérifié par: Jean trudeau	Soudure : E70XXELECT	No. Dessin : M6	
STRUCTURES M.H. inc. ENTREPRENEUR GÉNÉRAL	Acier : 350W-CL.C		
	Peinture: Galvanisé	Sequence :	0
	Date : 2018-11-29		

Marque	Quantité	Description	Longueur	Nuance	Finition	Poids	Poids total
P1	13	Raidisseur 1					
p1000	13	PLT9x82.5x120.7	120.7	G40.21	Galvanisé	1.422	18.485
	13					1.422	18.485
	13						18.485

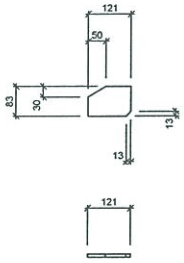

13 - P1 PLT9x82.5x120.7

REGISTERED PROFESSIONAL ENGINEER
NT/NU

Rev.	Date	Par	Description

Projet : Floor reinforcement
No. Projet : MH.2018.0839_ST

Statut :	Commentaire :	
Détaillé par : Julie Lajoie	Trou : 13/16"Ø u/n	Client: Construction Gely
Vérifié par: Jean trudeau	Soudure : E70XXELECT	No. Dessin : P1
STRUCTURES M.H. inc. ENTREPRENEUR GÉNÉRAL	Acier : G40.21	
	Peinture: Galvanisé	Sequence : 0
	Date : 2018-11-27	

Marque	Quantité	Description	Longueur	Nuance	Finition	Poids	Poids total
P2	4	Plat					
p1002	4	PLT12x180x270	270.0	G40.21	Galvanisé	10.093	40.372
p1003	4	PLT10x100x202	202.0	G40.21	Galvanisé	3.496	13.983
	8					13.589	54.356
	8						54.356

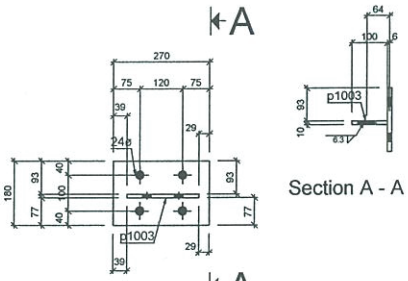

Section A - A

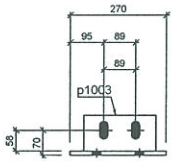

4 - P2 PLT12x180x270

REGISTERED PROFESSIONAL ENGINEER
TRUDEAU
JEAN
NT/NU
04/12/18

Rev.	Date	Par	Description

Projet : Floor reinforcement
No. Projet : MH.2018.0839_ST

Statut :	Commentaire :	
Détaillé par : Julie Lajoie	Trou : 13/16"Ø u/n	Client: Construction Gely
Vérifié par: Jean trudeau	Soudure : E70XXELECT	No. Dessin : P2
STRUCTURES M.H. inc ENTREPRENEUR GÉNÉRAL	Acier : G40.21	
	Peinture: Galvanisé	Sequence : 0
	Date : 2018-11-27	

Marque	Quantité	Description	Longueur	Nuance	Finition	Poids	Poids total
P3	3	Platine d'extrémité					
p1004	3	PLT12x123x161	161.0	G40.21	Galvanisé	4.113	12.338
p1005	3	PLT10x76x125	125.0	G40.21	Galvanisé	1.644	4.932
	6					5.757	17.270
	6						17.270

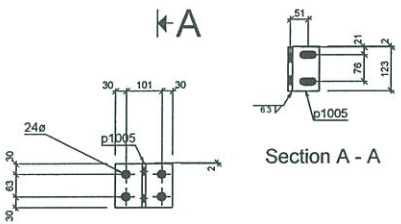

Section A - A

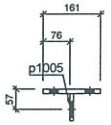

3 - P3 PLT12x123x161

REGISTERED PROFESSIONAL ENGINEER
LICENSED
04/12/18
NT/NU

Rev.	Date	Par	Description

Projet : Floor reinforcement
No. Projet : MH.2018.0839_ST

Statut :	Commentaire :	
Détaillé par : Julie Lajoie	Trou : 13/16"Ø u/n	Client Construction Gely
Vérifié par: Jean trudeau	Soudure : E70XXELECT	No. Dessin : P3
STRUCTURES M.H. inc. ENTREPRENEUR GÉNÉRAL	Acier : G40.21	
	Peinture: Galvanisé	Sequence : 0
	Date : 2018-11-27	

Marque	Quantité	Description	Longueur	Nuance	Finition	Poids	Poids total
P4	1						
p1012	1	PLT12.5x100x202	202.0	G40.21	Galvanisé	4.370	4.370
	1					4.370	4.370
	1						4.370

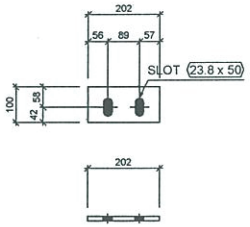

1 - P4 PLT12.5x100x202

REGISTERED PROFESSIONAL ENGINEER
NT/NU
04/12/18

Rev.	Date	Par	Description

Projet : Floor reinforcement
No. Projet : MH.2018.0839_ST

Statut :	Commentaire :	
Détaillé par : Julie Lajoie	Trou : 13/16"Ø u/n	Client construction Gely
Vérifié par: Jean trudeau	Soudure : E70XXELECT	No. Dessin : P4
STRUCTURES M.H. Inc. ENTREPRENEUR GÉNÉRAL	Acier : G40.21	
	Peinture: Galvanisé	Sequence : 0
	Date : 2018-11-27	

Marque	Quantité	Description	Longueur	Nuance	Finition	Poids	Poids total
P5	1	Platine d'extrémité					
p1004	1	PLT12x123x161	161.0	G40.21	Galvanisé	4.113	4.113
p1011	1	PLT10x76x125	125.0	G40.21	Galvanisé	1.644	1.644
	2					5.757	5.757
	2						5.757

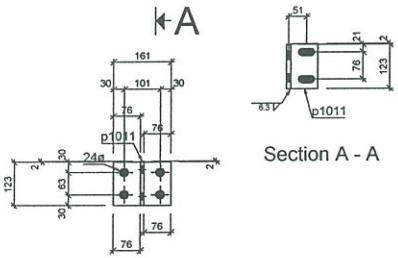

Section A - A

1 - P5 PLT12x123x161

REGISTERED PROFESSIONAL ENGINEER
TRUDEAU
JEAN
04/12/18
NT/NU

Rev.	Date	Par	Description

Projet : Floor reinforcement
No. Projet : MH.2018.0839_ST

Statut :	Commentaire :	
Détaillé par : Julie Lajoie	Trou : 13/16"Ø u/n	Client construction Gely
Vérifié par: Jean trudeau	Soudure : E70XXELECT	No. Dessin : P5
STRUCTURES M.H. inc. ENTREPRENEUR GÉNÉRAL	Acier : G40.21	
	Peinture: Galvanisé	Sequence : 0
	Date : 2018-11-27	

Marque	Quantité	Description	Longueur	Nuance	Finition	Poids	Poids total
P6	1	Plat				10.093	10.093
p1015	1	PLT12x180x270	270.0	G40.21	Galvanisé	4.370	4.370
p1006	1	PLT12.5x100x202	202.0	G40.21	Galvanisé	14.463	14.463
	2						
	2						14.463

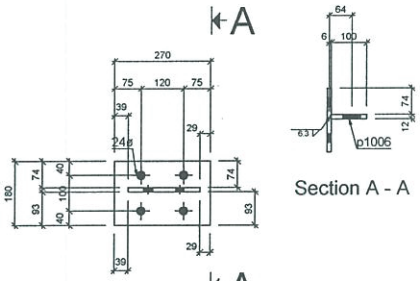

Section A - A

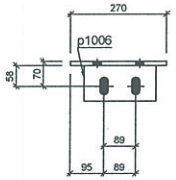

1 - P6 PLT12x180x270

REGISTERED PROFESSIONAL ENGINEER
NT/NU
04/12/18

Rev.	Date	Par	Description

Projet : Floor reinforcement
No. Projet : MH.2018.0839_ST

Statut :	Commentaire :	
Détaillé par : Julie Lajoie	Trou : 13/16"Ø u/n	Client: Construction Gely
Vérifié par: Jean trudeau	Soudure : E70XXELECT	No. Dessin : P6
STRUCTURES M.H. Inc. ENTREPRENEUR GÉNÉRAL	Acier : G40.21	
	Peinture: Galvanisé	Sequence : 0
	Date : 2018-11-27	

Marque	Quantité	Description	Longueur	Nuance	Finition	Poids	Poids total
P7	1	Plat					
p1015	1	PLT12x180x270	270.0	G40.21	Galvanisé	10.093	10.093
p1003	1	PLT10x100x202	202.0	G40.21	Galvanisé	3.496	3.496
	2					13.589	13.589
	2						13.589

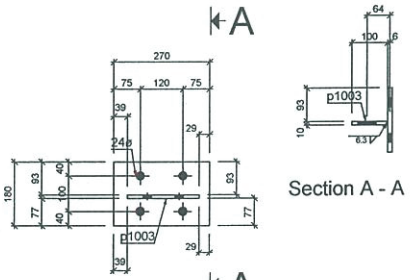

Section A - A

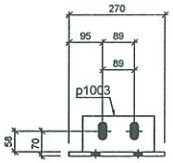

1 - P7 PLT12x180x270

REGISTERED PROFESSIONAL ENGINEER
NT/NU
04/12/18

Rev.	Date	Par	Description

Projet : Floor reinforcement
No. Projet : MH.2018.0839_ST

Statut :	Commentaire :	
Détaillé par : Julie Lajoie	Trou : 13/16"Ø u/n	Client: Construction Gely
Vérifié par: Jean trudeau	Soudure : E70XXELECT	No. Dessin : P7
STRUCTURES M.H. inc. ENTREPRENEUR GÉNÉRAL	Acier : G40.21	
	Peinture: Galvanisé	Sequence : 0
	Date : 2018-11-27	

Marque	Quantité	Description	Longueur	Nuance	Finition	Poids	Poids total
P8	1	Plat					
p1013	1	PLT12x180x270	270.0	G40.21	Galvanisé	10.093	10.093
	1					10.093	10.093
	1						10.093

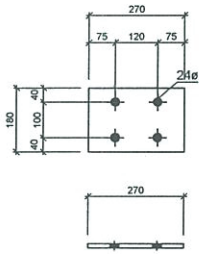

1 - P8 PLT12x180x270

REGISTERED PROFESSIONAL ENGINEER
NT/NU

Rev.	Date	Par	Description

Projet : Floor reinforcement
No. Projet : MH.2018.0839_ST

Statut :	Commentaire :	
Détaillé par : Julie Lajoie	Trou : 13/16"Ø u/n	Client Construction Gely
Vérifié par: Jean trudeau	Soudure : E70XXELECT	No. Dessin : P8
STRUCTURES M.H. inc ENTREPRENEUR GÉNÉRAL	Acier : G40.21	
	Peinture: Galvanisé	Sequence : 0
	Date : 2018-11-27	

Marque	Quantité	Description	Longueur	Nuance	Finition	Poids	Poids total
P9	1	Plat					
p1015	1	PLT12x180x270	270.0	G40.21	Galvanisé	10.093	10.093
p1008	1	PLT12.5x100x202	202.0	G40.21	Galvanisé	4.370	4.370
	2					14.463	14.463
	2						14.463

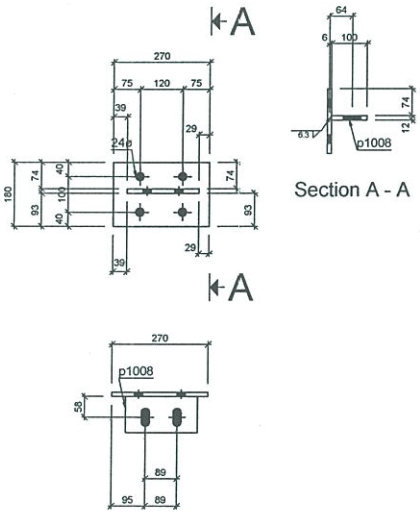

Section A - A

1 - P9 PLT12x180x270

REGISTERED PROFESSIONAL ENGINEER
NT/NU

Rev.	Date	Par	Description

Projet : Floor reinforcement
No. Projet : MH.2018.0839_ST

Statut :	Commentaire :		
Détaillé par : Julie Lajoie	Trou : 13/16"Ø u/n	Client : Construction Gely	
Vérifié par: Jean trudeau	Soudure : E70XXELECT	No. Dessin : P9	
STRUCTURES M.H. inc ENTREPRENEUR GÉNÉRAL	Acier : G40.21		
	Peinture: Galvanisé	Sequence :	0
	Date : 2018-11-27		

Marque	Quantité	Description	Longueur	Nuance	Finition	Poids	Poids total
P10	1	Plat					
p1015	1	PLT12x180x270	270.0	G40.21	Galvanisé	10.093	10.093
p1010	1	PLT10x100x202	202.0	G40.21	Galvanisé	3.496	3.496
	2					13.589	13.589
	2						13.589

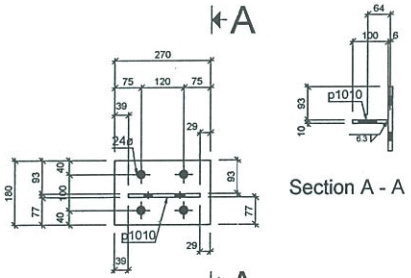

1 - P10 PLT12x180x270

REGISTERED PROFESSIONAL ENGINEER
NT/NU
04/12/18

Rev.	Date	Par	Description

Projet : Floor reinforcement
No. Projet : MH.2018.0839_ST

Statut :	Commentaire :	
Détaillé par : Julie Lajoie	Trou : 13/16"Ø u/n	Client : Construction Gely
Vérifié par: Jean trudeau	Soudure : E70XXELECT	No. Dessin : P10
STRUCTURES M.H. inc ENTREPRENEUR GÉNÉRAL	Acier : G40.21	
	Peinture: Galvanisé	Sequence : 0
	Date : 2018-11-27	

Marque	Quantité	Description	Longueur	Nuance	Finition	Poids	Poids total
P11	1	Plat					
p1009	1	PLT12x180x270	270.0	G40.21	Galvanisé	10.093	10.093
p1008	1	PLT12.5x100x202	202.0	G40.21	Galvanisé	4.370	4.370
	2					14.463	14.463
	2						14.463

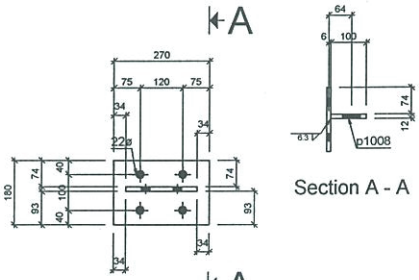

Section A - A

1 - P11 PLT12x180x270

REGISTERED PROFESSIONAL ENGINEER
NT/NU
Jean Trudeau
04/12/18

Rev.	Date	Par	Description

Projet : Floor reinforcement
No. Projet : MH.2018.0839_ST

Statut :	Commentaire :	
Détaillé par : Julie Lajoie	Trou : 13/16"Ø u/n	Client Construction Gely
Vérifié par: Jean trudeau	Soudure : E70XXELECT	No. Dessin : P11
STRUCTURES M.H. inc ENTREPRENEUR GÉNÉRAL	Acier : G40.21	
	Peinture: Galvanisé	Sequence : 0
	Date : 2018-11-27	

Marque	Quantité	Description	Longueur	Nuance	Finition	Poids	Poids total
P12	1	Plat					
p1009	1	PLT12x180x270	270.0	G40.21	Galvanisé	10.093	10.093
p1006	1	PLT12.5x100x202	202.0	G40.21	Galvanisé	4.370	4.370
	2					14.463	14.463
	2						14.463

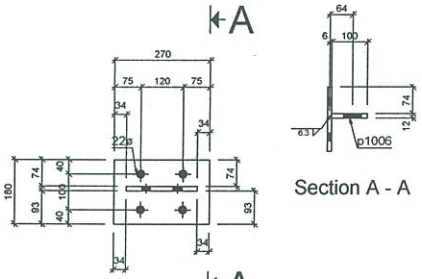

Section A - A

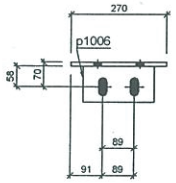

1 - P12 PLT12x180x270

REGISTERED PROFESSIONAL ENGINEER
NT/NU
04/12/18

Rev.	Date	Par	Description

Projet : Floor reinforcement
No. Projet : MH.2018.0839_ST

Statut :	Commentaire :		
Détaillé par : Julie Lajoie	Trou : 13/16"Ø u/n	Client : Construction Gely	
Vérifié par: Jean trudeau	Soudure : E70XXELECT	No. Dessin : P12	
STRUCTURES M.H. inc ENTREPRENEUR GÉNÉRAL	Acier : G40.21		
	Peinture: Galvanisé	Sequence :	0
	Date : 2018-11-27		

Marque	Quantité	Description	Longueur	Nuance	Finition	Poids	Poids total
P13	1	Plat					
p1007	1	PLT12x180x270	270.0	G40.21	Galvanisé	10.093	10.093
p1006	1	PLT12.5x100x202	202.0	G40.21	Galvanisé	4.370	4.370
	2					14.463	14.463
	2						14.463

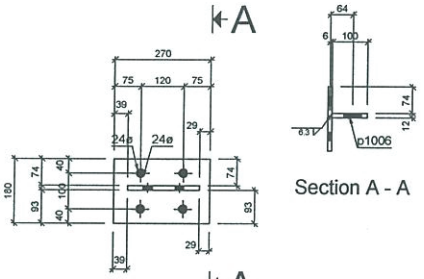

Section A - A

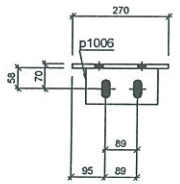

1 - P13 PLT12x180x270

REGISTERED PROFESSIONAL ENGINEER
NT/NU

Rev.	Date	Par	Description

Projet : Floor reinforcement
No. Projet : MH.2018.0839_ST

Statut :	Commentaire :	
Détaillé par : Julie Lajoie	Trou : 13/16"Ø u/n	Client: Construction Gely
Vérifié par: Jean trudeau	Soudure : E70XXELECT	No. Dessin : P13
STRUCTURES M.H. inc. ENTREPRENEUR GÉNÉRAL	Acier : G40.21	
	Peinture: Galvanisé	Sequence : 0
	Date : 2018-11-27	

Marque	Quantité	Description	Longueur	Nuance	Finition	Poids	Poids total
P14	1						
p1014	1	PLT4x1575.7x2593	2593.0	G40.21	Galvanisé	282.848	282.848
	1					282.848	282.848
	1						282.848

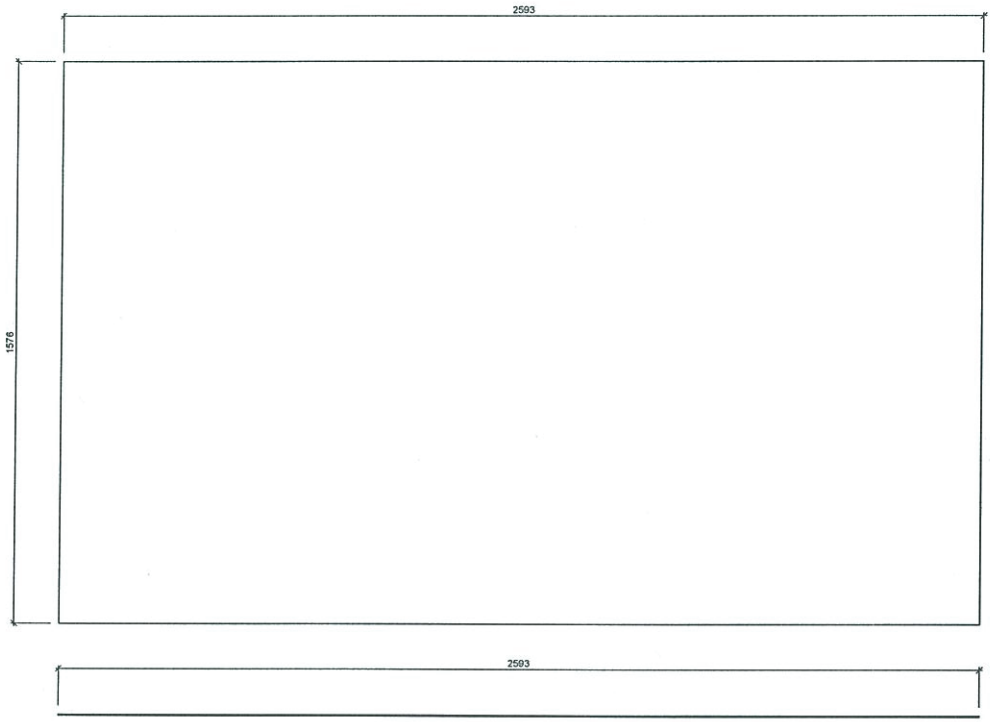

1 - P14 PLT4x1575.7x2593

REGISTERED PROFESSIONAL ENGINEER
NT/NU

Rev.	Date	Par	Description

Projet : Floor reinforcement
No. Projet : MH.2018.0839_ST

Statut :	Commentaire :	
Détaillé par : Julie Lajoie	Trou : 13/16"Ø u/n	Client : Construction Gely
Vérifié par: Jean trudeau	Soudure : E70XXELECT	No. Dessin : P14
STRUCTURES M.H. Inc ENTREPRENEUR GÉNÉRAL	Acier : G40.21	
	Peinture: Galvanisé	Sequence : 0
	Date : 2018-11-27	

SUBMITTALS IDENTIFICATION SHEET

PROJECT: Wastewater Treatment Plant Upgrade
Iqaluit, Nunavut

NUNAMI
STANTEC LIMITED
1088C Noble House
Iqaluit NU
www.stantec.com

CONTRACTOR: Kudlik Construction Ltd, Project 2018-062

Telephone: 867-979-1166

E-mail: srousseau@kudlik.biz

SUBCONTRACTOR: Structure MH

Person responsible: Moise Harvey

Telephone: (418)487-8772 E-mail: structures.mh@gmail.com

PRODUCT SUBMITTED:

☑ As Specified

☐ Alternate

SUPPLIER or MANUFACTURER:

Person responsible:

Telephone: E-mail:

DESCRIPTION OF SUBMITTAL:

# of pages:

Reference to drawings:

Reference to specs:

Division: 05 Section: 05 12 23 - 05 21 00

REMARKS:

Floor opening

REVIEW AND COMMENTS (for use by Consultants):

STANTEC PROJECT #: 110126045 SUBMITTAL # STC-016

This review by Stantec is for general conformance with the design concept of Stantec's design of the:

☐ Architectural ☐ Electrical
☑ Structural ☐ Other
☐ Mechanical

component(s) only and does not mean that Stantec has verified or approves the shop drawing(s). The Contractor remains solely responsible for the shop drawing(s) and this review by Stantec does not relieve the Contractor of the Contractor's responsibility for errors or omissions in the shop drawing(s) or for meeting all requirements of the contract documents. This review does not mean that Stantec approves the detailed design inherent in the shop drawing, responsibility for which shall remain with the Contractor submitting same, nor does this review mean that Stantec accepts any deviation of the shop drawing(s) from the contract documents. The Contractor is responsible for confirming all dimensions and correlating them at the job site, for all construction means, methods and techniques, and for coordination of construction work of all trades, including coordination of all shop drawings.

Stantec

☐ REVIEWED

☑ REVIEWED, AS NOTED

☐ REVISE AND RESUBMIT

☐ NOT REVIEWED

DATE 2019-01-02

BY pclyne

Ensure that all beam positions are coordinated with mechanical and process disciplines, and with actual measurements taken on site.

Review of this submission is for compliance with general intent of the contract. This review does not relieve the Sub-Contractor, Supplier or Manufacturer of responsibility for error or omissions in the submission or the responsibility of meeting all requirements of the contract documents. Any deviation from the contract documents initiated by the Sub-Contractor, Supplier or Manufacturer shall be at their sole risk. QUANTITIES AND DETAIL DIMENSIONS ARE THE SUB-CONTRACTORS OR SUPPLIERS RESPONSIBILITY. VERIFY DATA WITH FIELD DIMENSIONS.

SUBMITTAL TRACKING No.: **STC-015** 2018-12-05

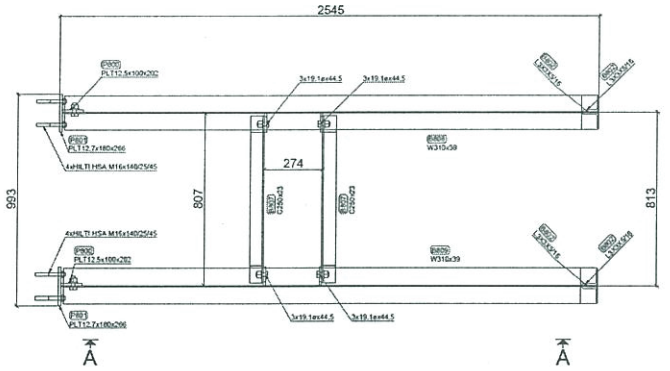

Plan view

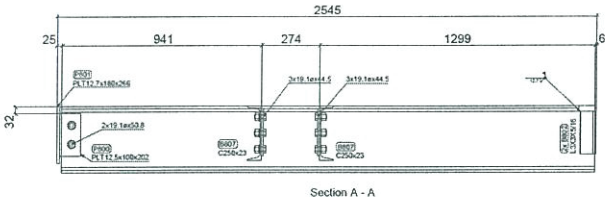

Section A - A

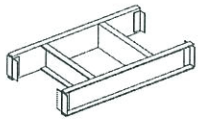

3D view

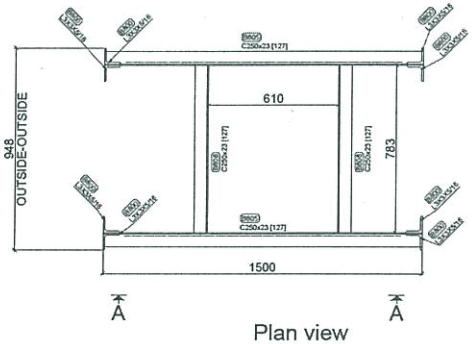

Plan view

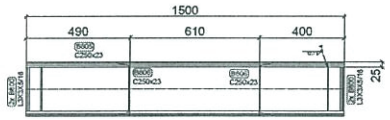

Section A - A

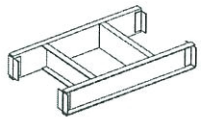

3D view

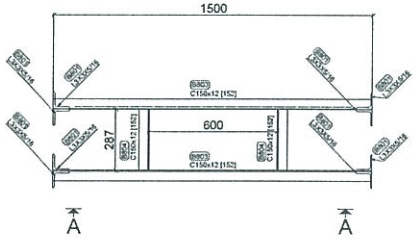

Plan view

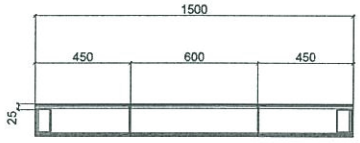

Section A - A

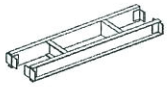

3D view

PROJET :

IQALUIT - WWTP

NEW FLOOR OPENING

AXE B, D
AND
AXE 5, 6

-ALL STEEL IS GALVANIZED

REGISTERED PROFESSIONAL ENGINEER
NT/NU
07/12/18

ALL WELD ARE COMPLIANT WITH CWB

Rev.	Date	Par	Description

STRUCTURES M.H. inc.
ENTREPRENEUR GÉNÉRAL

Date : 2018-11-27

INGÉNIEUR :

Client :
KUDLIK CONST.

Projet :
New floor opening

No. Projet :
MH.2018.0840_ST

Détaillé par :
Julie Lajoie

TITRE :
ELEVATION VIEW
AXE B,D & 5,6

No. Dessin :
ST-800

Séquence :
/0

Marque	Quantité	Description	Longueur	Nuance	Finition	Poids	Poids total
B800	8						
b8000	8	L3X3X5/16	204.0	A36	Galvanisé	4.083	32.661
	8					4.083	32.661
	8						32.661

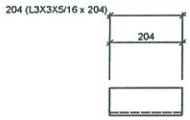

8 - B800 L3X3X5/16

d=76.2 b=76.2 t=8 w=8 k=

Grid reference

REGISTERED PROFESSIONAL ENGINEER
NT/NU
07/12/18

Rev.	Date	Par	Description

Projet : New floor opening

No. Projet : MH.2018.0840_ST

Statut :	Commentaire :	
Détaillé par : Julie Lajoie	Trou : 13/16"Ø u/n	Client : KUDLIK CONST.
Vérifié par: Jean Trudeau	Soudure : E70XXELECT	No. Dessin : B800
STRUCTURES M.H. Inc ENTREPRENEUR GÉNÉRAL	Acier : A36	
	Peinture: Galvanisé	Sequence : 0
	Date : 2018-11-27	

Marque	Quantité	Description	Longueur	Nuance	Finition	Poids	Poids total
B801	8						
b8001	8	L3X3X5/16	102.0	A36	Galvanisé	2.041	16.331
	8					2.041	16.331
	8						16.331

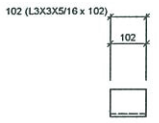

8 - B801 L3X3X5/16

d=76.2 b=76.2 t=8 w=8 k=

Grid reference

REGISTERED PROFESSIONAL ENGINEER
Jean Trudeau
04/12/18
NT/NU

Rev.	Date	Par	Description

Projet : New floor opening

No. Projet : MH.2018.0840_ST

Statut :	Commentaire :	
Détaillé par : Julie Lajoie	Trou : 13/16"Ø u/n	Client : KUDLIK CONST.
Vérifié par: Jean Trudeau	Soudure : E70XXELECT	No. Dessin : B801
STRUCTURES M.H. Inc ENTREPRENEUR GÉNÉRAL	Acier : A36	
	Peinture: Galvanisé	Sequence : 0
	Date : 2018-11-27	

Marque	Quantité	Description	Longueur	Nuance	Finition	Poids	Poids total
B802	4						
b8002	4	L3X3X5/16	204.0	A36		4.083	16.331
	4					4.083	16.331
	4						16.331

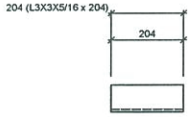

4 - B802 L3X3X5/16

d=76.2 b=76.2 t=8 w=8 k=

Grid reference

REGISTERED PROFESSIONAL ENGINEER
NT/NU

Rev.	Date	Par	Description

Projet : New floor opening

No. Projet : MH.2018.0840_ST

Statut :	Commentaire :	
Détaillé par : Julie Lajoie	Trou : 13/16"Ø u/n	Client : KUDLIK CONST.
Vérifié par: Jean Trudeau	Soudure : E70XXELECT	No. Dessin : B802
STRUCTURES M.H. inc ENTREPRENEUR GÉNÉRAL	Acier : A36	
	Peinture: Aucun	Sequence : 0
	Date : 2018-11-27	

Marque	Quantité	Description	Longueur	Nuance	Finition	Poids	Poids total
B803	2						
b8003	2	C150x12	1500.0	300W	Galvanisé	39.683	79.366
	2					39.683	79.366
	2						79.366

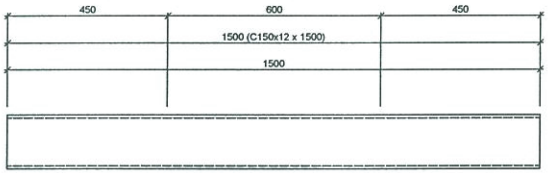

2 - B803 C150x12

d=152 b=48 t=8.7 w=5.1 k=17.4

Grid reference

REGISTERED PROFESSIONAL ENGINEER
NT/NU

Rev.	Date	Par	Description

Projet : New floor opening

No. Projet : MH.2018.0840_ST

Statut :	Commentaire :	
Détaillé par : Julie Lajoie	Trou : 13/16"Ø u/n	Client : KUDLIK CONST.
Vérifié par: Jean Trudeau	Soudure : E70XXELECT	No. Dessin : B803
STRUCTURES M.H. inc ENTREPRENEUR GÉNÉRAL	Acier : 300W	
	Peinture: Galvanisé	Sequence : 0
	Date : 2018-11-27	

Marque	Quantité	Description	Longueur	Nuance	Finition	Poids	Poids total
B804	2						
b8004	2	C150x12	287.1	300W	Galvanisé	7.595	15.191
	2					7.595	15.191
	2						15.191

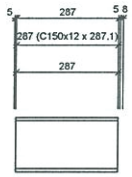

2 - B804 C150x12

d=152 b=48 t=8.7 w=5.1 k=17.4

Grid reference

REGISTERED PROFESSIONAL ENGINEER
TRUDEAU
NT/NU
04/12/18

Rev.	Date	Par	Description

Projet : New floor opening

No. Projet : MH.2018.0840_ST

Statut :	Commentaire :	
Détaillé par : Julie Lajoie	Trou : 13/16"Ø u/n	Client : KUDLIK CONST.
Vérifié par: Jean Trudeau	Soudure : E70XXELECT	No. Dessin : B804
STRUCTURES M.H. Inc ENTREPRENEUR GÉNÉRAL	Acier : 300W	
	Peinture: Galvanisé	Sequence : 0
	Date : 2018-11-27	

Marque	Quantité	Description	Longueur	Nuance	Finition	Poids	Poids total
B805	2						
b8005	2	C250x23	1500.0	300W	Galvanisé	76.059	152.119
	2					76.059	152.119
	2						152.119

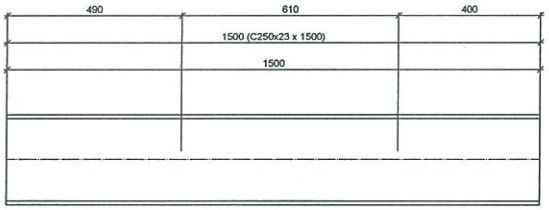

2 - B805 C250x23

d=254 b=65 t=11.1 w=6.1 k=22.2

Grid reference



Rev.	Date	Par	Description

Projet : New floor opening

No. Projet : MH.2018.0840_ST

Statut :	Commentaire :	
Détaillé par : Julie Lajoie	Trou : 13/16"Ø u/n	Client : KUDLIK CONST.
Vérifié par: Jean Trudeau	Soudure : E70XXELECT	No. Dessin : B805
STRUCTURES M.H. inc ENTREPRENEUR GÉNÉRAL	Acier : 300W	
	Peinture: Galvanisé	Sequence : 0
	Date : 2018-11-27	

Marque	Quantité	Description	Longueur	Nuance	Finition	Poids	Poids total
B806	2						
b8006	2	C250x23	783.2	300W	Galvanisé	39.713	79.426
	2					39.713	79.426
	2						79.426

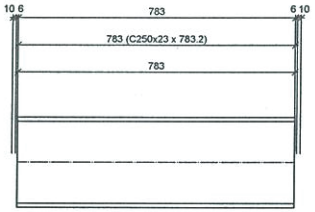

2 - B806 C250x23

d=254 b=65 t=11.1 w=6.1 k=22.2

Grid reference

REGISTERED PROFESSIONAL ENGINEER
NT/NU

Rev.	Date	Par	Description

Projet : New floor opening

No. Projet : MH.2018.0840_ST

Statut :	Commentaire :	
Détaillé par : Julie Lajoie	Trou : 13/16"O u/n	Client : KUDLIK CONST.
Vérifié par: Jean Trudeau	Soudure : E70XXELECT	No. Dessin : B806
STRUCTURES M.H. inc ENTREPRENEUR GÉNÉRAL	Acier : 300W	
	Peinture: Galvanisé	Sequence : 0
	Date : 2018-11-27	

Marque	Quantité	Description	Longueur	Nuance	Finition	Poids	Poids total
B807	2						
b8007	2	C250x23	781.8	300W	Galvanisé	39.642	79.284
	2					39.642	79.284
	2						79.284

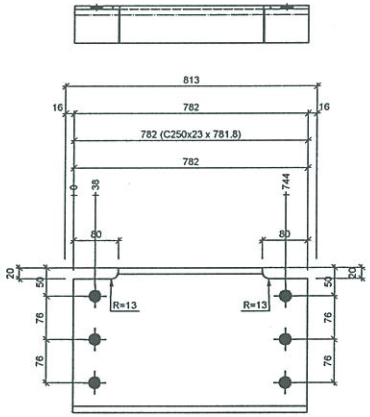

2 - B807 C250x23

d=254 | b=65 | t=11.1 | w=6.1 | k=22.2

Grid reference

REGISTERED PROFESSIONAL ENGINEER
JEAN TRUDEAU
04/12/19
NT/NU

Rev.	Date	Par	Description

Projet : New floor opening

No. Projet : MH.2018.0840_ST

Statut :	Commentaire :	
Détaillé par : Julie Lajoie	Trou : 13/16"Ø u/n	Client : KUDLIK CONST.
Vérifié par: Jean Trudeau	Soudure : E70XXELECT	No. Dessin : B807
STRUCTURES M.H. inc. ENTREPRENEUR GÉNÉRAL	Acier : 300W	
	Peinture: Galvanisé	Sequence : 0
	Date : 2018-11-27	

Marque	Quantité	Description	Longueur	Nuance	Finition	Poids	Poids total
B809	1						
b8008	1	W310x39	2514.0	350W	Galvanisé	216.154	216.154
p8000	2	PLT9.5x88.9x224.3	224.3	G40.21	Galvanisé	3.265	6.530
	3					222.685	222.685
	3						222.685

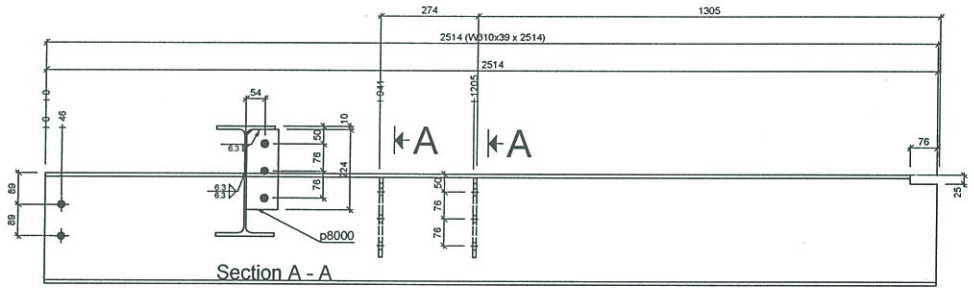

Section A - A

A A

1 - B809 W310x39

d=310 b=165 t=9.7 w=5.8 k=26

Grid reference

REGISTERED PROFESSIONAL ENGINEER
NT/NU
04/12/15

Rev.	Date	Par	Description

Projet : New floor opening

No. Projet : MH.2018.0840_ST

Statut :	Commentaire :	
Détaillé par : Julie Lajoie	Trou : 13/16"Ø u/n	Client : KUDLIK CONST.
Vérifié par: Jean Trudeau	Soudure : E70XXELECT	No. Dessin : B809
STRUCTURES M.H. Inc ENTREPRENEUR GÉNÉRAL	Acier : 350W	
	Peinture: Galvanisé	Sequence : 0
	Date : 2018-11-27	

Marque	Quantité	Description	Longueur	Nuance	Finition	Poids	Poids total
B808	1						
b8008	1	W310x39	2514.0	350W	Galvanisé	216.154	216.154
p8000	2	PLT9.5x88.9x224.3	224.3	G40.21	Galvanisé	3.265	6.530
	3					222.685	222.685
	3						222.685

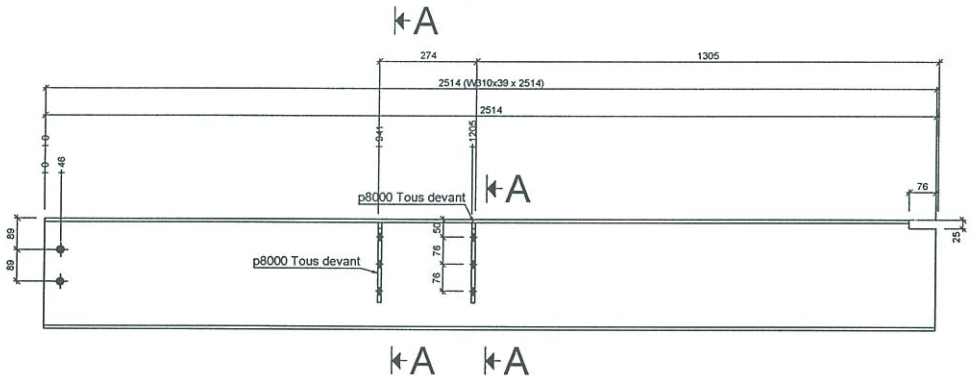

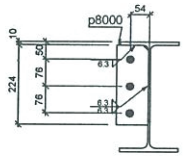

Section A - A

1 - B808 W310x39

d=310 b=165 t=9.7 w=5.8 k=26

Grid reference



Rev.	Date	Par	Description

Projet : New floor opening No. Projet : MH.2018.0840_ST		
Statut :	Commentaire :	
Détaillé par : Julie Lajoie	Trou : 13/16"Ø u/n	Client : KUDLIK CONST.
Vérifié par: Jean Trudeau	Soudure : E70XXELECT	No. Dessin : B808
STRUCTURES M.H. Inc. ENTREPRENEUR GÉNÉRAL	Acier : 350W	
	Peinture: Galvanisé	Sequence : 0
	Date : 2018-11-27	

Marque	Quantité	Description	Longueur	Nuance	Finition	Poids	Poids total
P800	2						
p8001	2	PLT12.5x100x202	202.0	G40.21	Galvanisé	4.370	8.740
	2					4.370	8.740
	2						8.740

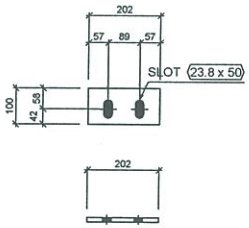

2 - P800 PLT12.5x100x202

REGISTERED PROFESSIONAL ENGINEER
NT/NU
04/12/18

Rev.	Date	Par	Description

Projet : New floor opening
No. Projet : MH.2018.0840_ST

Statut :	Commentaire :	
Détaillé par : Julie Lajoie	Trou : 13/16"D u/n	Client : KUDLIK CONST.
Vérifié par: Jean Trudeau	Soudure : E70XXELECT	No. Dessin : P800
STRUCTURES M.H. inc ENTREPRENEUR GÉNÉRAL	Acier : G40.21	
	Peinture: Galvanisé	Sequence : 0
	Date : 2018-11-27	

Marque	Quantité	Description	Longueur	Nuance	Finition	Poids	Poids total
P801	2	Platine d'extrémité					
p8002	2	PLT12.7x180x266	266.0	G40.21	Galvanisé	10.524	21.047
	2					10.524	21.047
	2						21.047

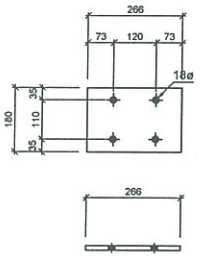

2 - P801 PLT12.7x180x266

REGISTERED PROFESSIONAL ENGINEER
TRUDEAU
NT/NU

Rev.	Date	Par	Description

Projet : New floor opening
No. Projet : MH.2018.0840_ST

Statut :	Commentaire :	
Détaillé par : Julie Lajoie	Trou : 13/16"Ø u/n	Client : KUDLIK CONST.
Vérifié par: Jean Trudeau	Soudure : E70XXELECT	No. Dessin : P801
STRUCTURES M.H. inc ENTREPRENEUR GÉNÉRAL	Acier : G40.21	
	Peinture: Galvanisé	Sequence : 0
	Date : 2018-11-27	

SUBMITTALS IDENTIFICATION SHEET

PROJECT: Wastewater Treatment Plant Upgrade
Iqaluit, Nunavut

NUNAMI
STANTEC LIMITED

1088C Noble House
Iqaluit NU
www.stantec.com

CONTRACTOR: Kudlik Construction Ltd, Project 2018-062

Telephone: 867-979-1166

E-mail: srousseau@kudlik.biz

SUBCONTRACTOR: Structure MH

Person responsible: Moise Harvey

Telephone: (418)487-8772 E-mail: structures.mh@gmail.com

PRODUCT SUBMITTED:

☑ As Specified

☐ Alternate

SUPPLIER or MANUFACTURER:

Person responsible:

Telephone: E-mail:

DESCRIPTION OF SUBMITTAL:

# of pages:

Reference to drawings:

Reference to specs:

Division: 05 Section: 05 12 23 - 05 21 00

REMARKS:

DAF tank plateform

REVIEW AND COMMENTS (for use by Consultants):

STANTEC PROJECT #: 110126045 SUBMITTAL # STC-017 R1

This review by Stantec is for general conformance with the design concept of Stantec's design of the:

☐ Architectural ☐ Electrical
☑ Structural ☐ Other
☐ Mechanical

component(s) only and does not mean that Stantec has verified or approves the shop drawing(s). The Contractor remains solely responsible for the shop drawing(s) and this review by Stantec does not relieve the Contractor of the Contractor's responsibility for errors or omissions in the shop drawing(s) or for meeting all requirements of the contract documents. This review does not mean that Stantec approves the detailed design inherent in the shop drawing, responsibility for which shall remain with the Contractor submitting same, nor does this review mean that Stantec accepts any deviation of the shop drawing(s) from the contract documents. The Contractor is responsible for confirming all dimensions and correlating them at the job site, for all construction means, methods and techniques, and for coordination of construction work of all trades, including coordination of all shop drawings.

Stantec

☐ REVIEWED

☑ REVIEWED, AS NOTED

☐ REVISE AND RESUBMIT

☐ NOT REVIEWED

DATE 2019-04-11

BY pclyne

Review of this submission is for compliance with general intent of the contract. This review does not relieve the Sub-Contractor, Supplier or Manufacturer of responsibility for error or omissions in the submission or the responsibility of meeting all requirements of the contract documents. Any deviation from the contract documents initiated by the Sub-Contractor, Supplier or Manufacturer shall be at their sole risk. QUANTITIES AND DETAIL DIMENSIONS ARE THE SUB-CONTRACTORS OR SUPPLIERS RESPONSIBILITY. VERIFY DATA WITH FIELD DIMENSIONS.

SUBMITTAL TRACKING No.: **STC-017 rev 1**

2019-04-11

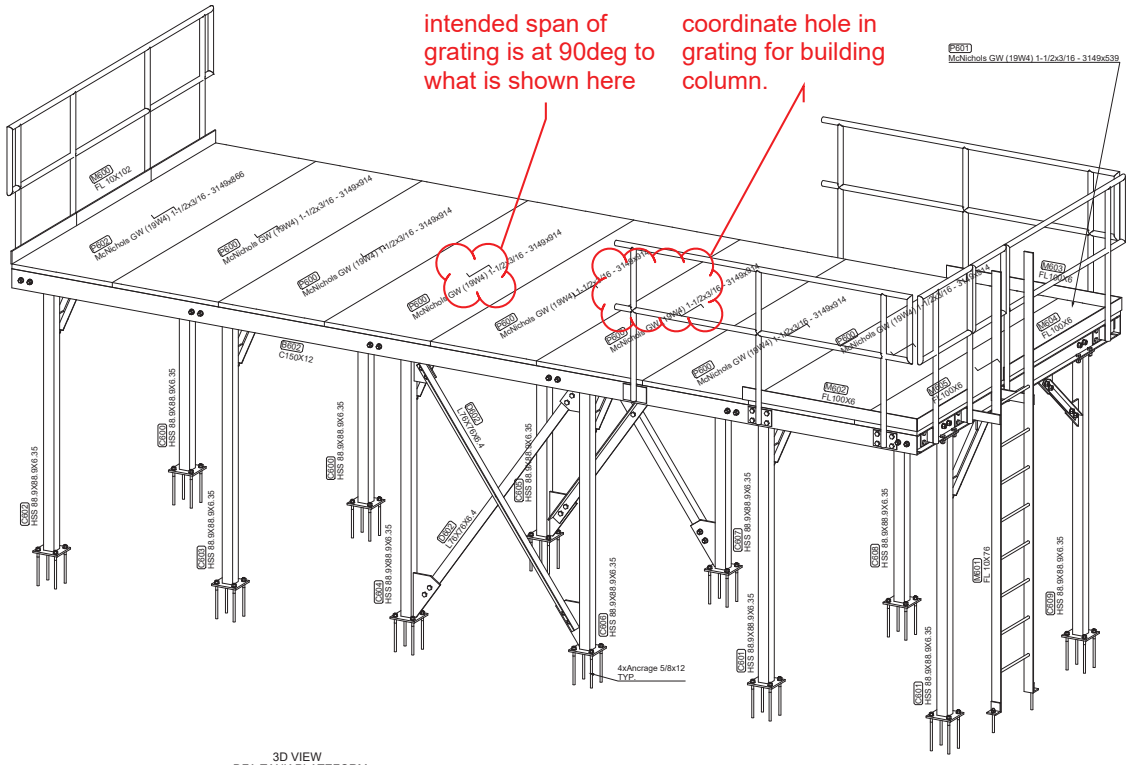

3D VIEW
DFA TANK PLATEFORM
WITH RAILING AND LADER

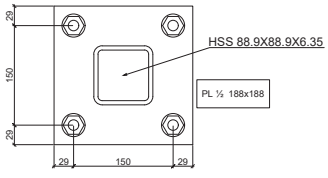

Anchor detail Top

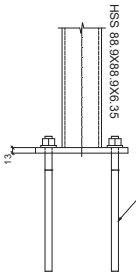

Anchor detail Front

PROJET :
IQALUIT
WASTEWATER TREATMENT PLANT

DFA TANK PLATEFORM

-TOUS L'ACIER EST GALVANISÉ
-ALL STEEL IS GALVANIZED

-CAILLEBOTIS (19W4) 1½x3 / 16 GALVANIZED STEEL

ALL WELDING COMPLIES WITH CWB STANDARDS

Rev.	Date	Par	Description
RE V-B	2019-04-11	Moise Harvey	CCN-010-REV-B

STRUCTURES M.H. inc.
ENTREPRENEUR GÉNÉRAL
1570 Av. de la Technologie, Alma QC J8W 3R8
Téléphone : 418 480 2186 Télécopieur : 418 668 9235
structuresmh@gmail.com
RBQ : 5612-9215-01

Date : 11-avr.-19

INGÉNIEUR : Jean trudeau

Client :
Kudlik Const.

Projet :
DFA Tank Plateform With Railing and Lader

No. Projet :
MH.2018.0840_ST

Détaillé par :
Julie Lajoie

TITRE :
VIEW 3D PLATEFORM DFA

Soudure : 6.7mmXXG.ECT
Trou : 13/16"Ø.unc
Acier : 300W,350W,350W-CL.C,A-1001,A36,G40.21
Peinture : Aucun Enduit/old Paint

No. Dessin :
ST-600

Séquence :
REVAB

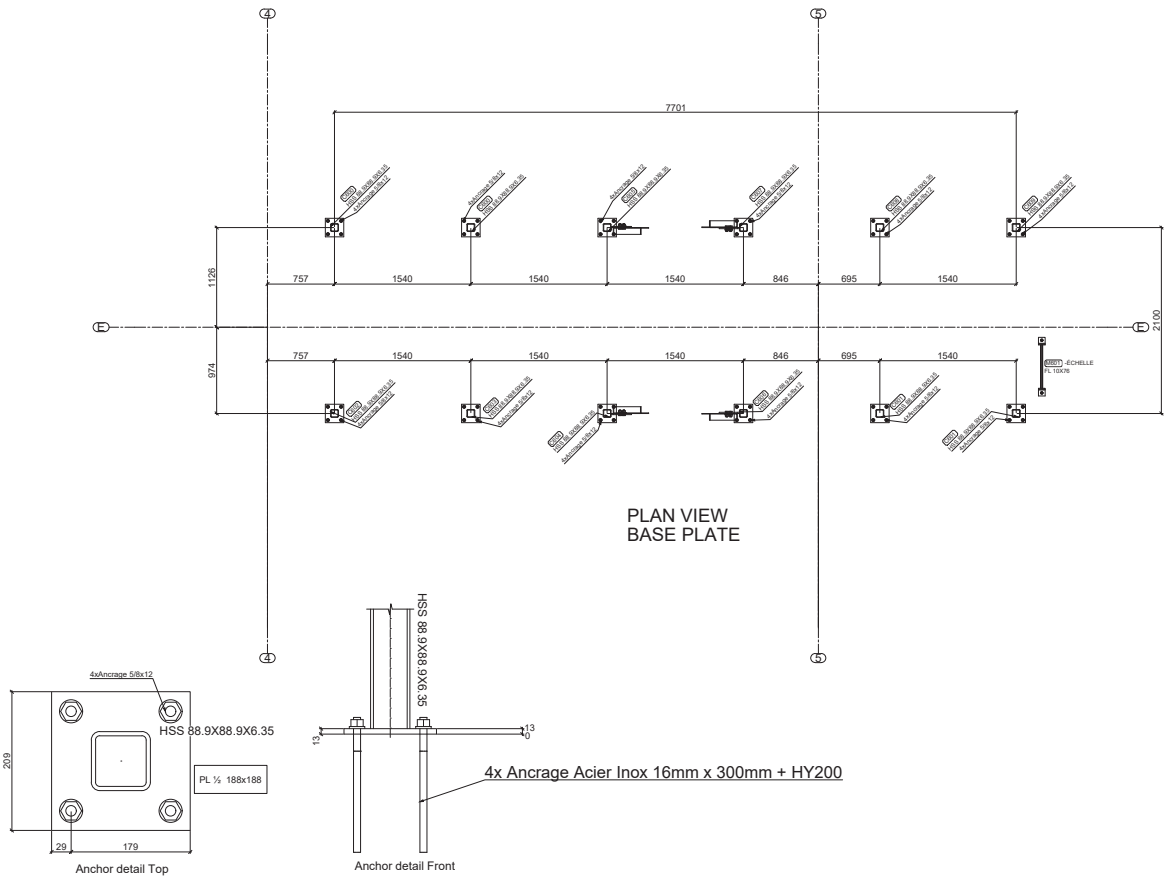

PROJET :

IQALUIT
WASTEWATER TREATMENT PLANT

DFA TANK PLATEFORM

-TOUS L'ACIER EST GALVANISÉ
-ALL STEEL IS GALVANIZED

ALL WELDING COMPLIES WITH CWB STANDARDS

Rev.	Date	Par	Description
REV-B	2019-04-11	Moise Harvey	CCN-010-REV-B

STRUCTURES M.H. inc.
ENTREPRENEUR GÉNÉRAL
1670 Av. de la Technologie, Jérna G9X 3S9
Téléphone : 418 900 2186 Télécopieur : 418 668-9235
structures.mh@gmail.com
RBQ : 5612-9215-01

Date : 2018-11-28

INGÉNIEUR : Jean trudeau

Client : Kudlik Const.

Projet : DFA Tank Plateform With Railing and Lader

No. Projet : MH.2018.0840_ST

Détaillé par : Julie Lajoie

TITRE : ELEVATION BASE PLATE PLATEFORM DFA

Soudure :	6700X6LBCT	No. Dessin :	ST-601
Trou :	13/16"Ø uin.		
Acier :	300W 300W-CL.C.A36.0-60.21		
Peinture :	Aucun Peint	Séquence :	REV-B

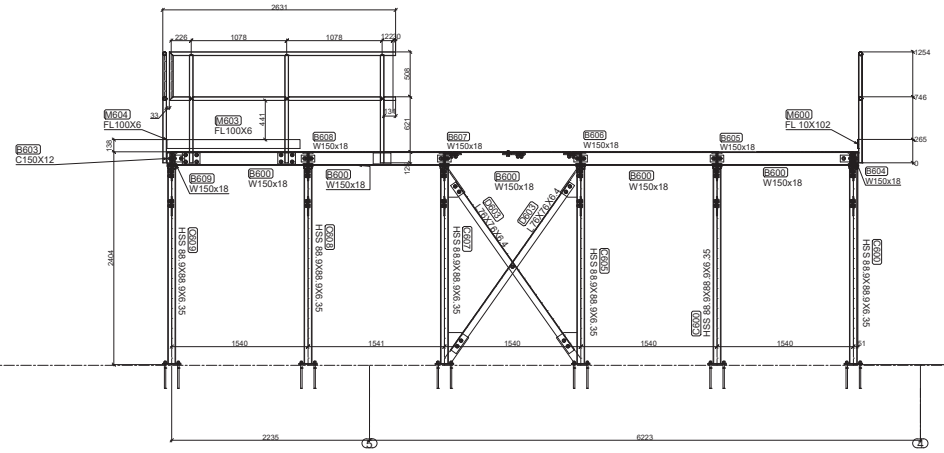

Elevation

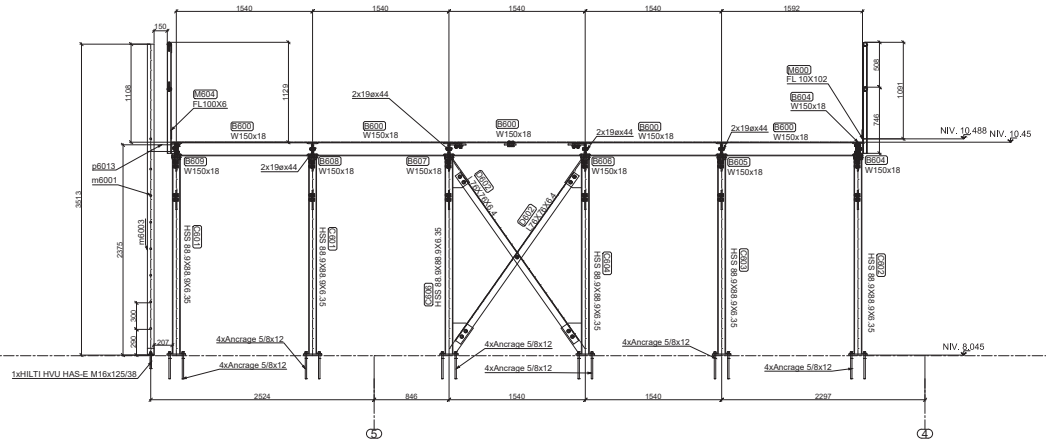

Elevation

PROJET :

IQALUIT
WASTEWATER TREATMENT PLANT

DFA TANK PLATEFORM

-TOUS L'ACIER EST GALVANISÉ
-ALL STEEL IS GALVANIZED

-CAILLEBOTIS (19W4) 1½x3 / 16 GALVANIZED STEEL

ALL WELDING COMPLIES WITH CWB STANDARDS

Rev.	Date	Par	Description
RE V-B	2019-04-11	Moise Harvey	CCN-010-REV-B

STRUCTURES M.H. inc.
ENTREPRENEUR GÉNÉRAL
1070 Av. de la Technologie, Alma (QC) J8B 3W9
Téléphone : 418 669-2186 Télécopieur : 418 668-9235
structuresmh@gmail.com
RBQ : 5612-9215-01

Date : 2018-11-28

INGÉNIEUR : Jean trudeau

Client : Kudlik Const.

Projet : DFA Tank Plateform With Railing and Lader

No. Projet : MH.2018.0840_ST

Détaillé par : Julie Lajoie

TITRE : ELEVATION BASE PLATE PLATEFORM DFA

Soudure :	6-7RXXB-ECT
Trou :	13/16"Ø unc
Acier :	W350 (300W) 350W-CL C-A36,G40.21
Peinture :	Aucun,Galvanisé,Peint
No. Dessin :	ST-602
Séquence :	REVAB

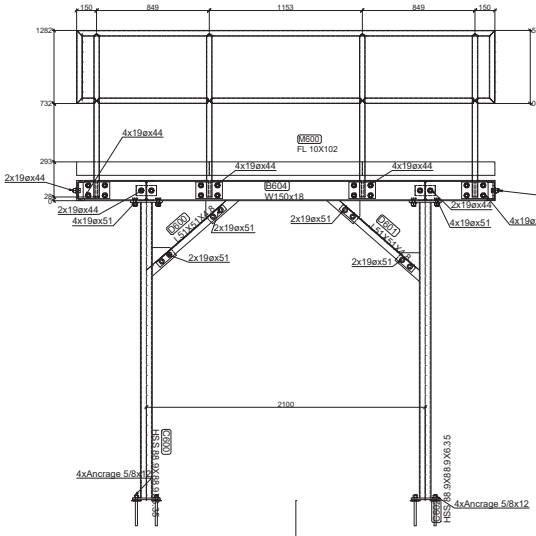

E

Elevation

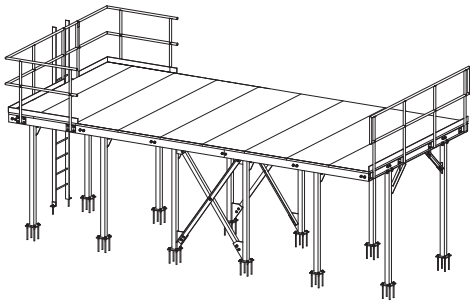

3D view

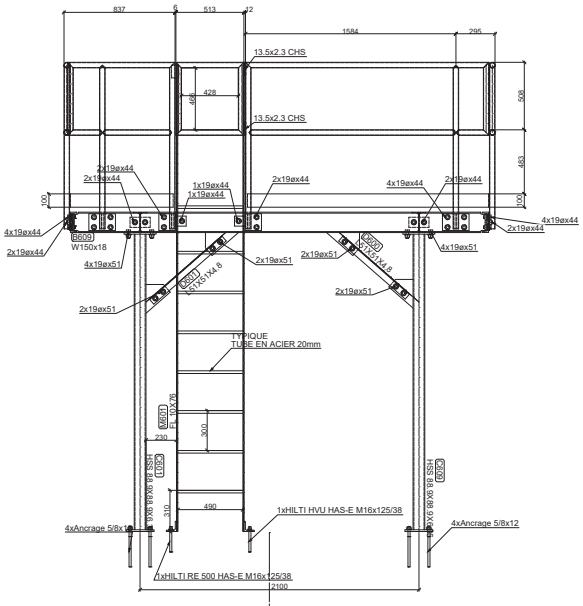

E

Elevation

PROJET :

IQALUIT
WASTEWATER TREATMENT
PLANT

DFA TANK PLATEFORM

-TOUS L'ACIER EST GALVANISÉ
-ALL STEEL IS GALVANIZED

-CAILLEBOTIS (19W4) 1½x3 / 16
GALVANIZED STEEL

ALL WELDING
COMPLIES WITH CWB
STANDARDS

Rev.	Date	Par	Description
REV-B	2019-04-11	Moise Harvey	CCN-010-REV-B

STRUCTURES M.H. inc.
ENTREPRENEUR GÉNÉRAL
1570 Av. de la Technologie, Alma, QC, J8W 3R9
Téléphone : 418 669-2186 Télécopieur : 418 668-9235
structureshmh@gmail.com
RBQ : 5612-9215-01

Date : 2018-11-28

INGÉNIEUR : Jean trudeau

Client :
Kudlik Const.

Projet :
DFA Tank Plateform With Railing and Lader

No. Projet :
MH.2018.0840_ST

Détaillé par :
Julie Lajoie

TITRE :
ELEVATION BASE PLATE
PLATEFORM DFA

Soudure : ST/CSSS,ELECT
Trou : 13/16"HP s/s
Acier : 350W,300W,300W-CL.C,A36,G40.21
Peinture: Galvanisé

No. Dessin :
ST-603

Séquence :
REV-B

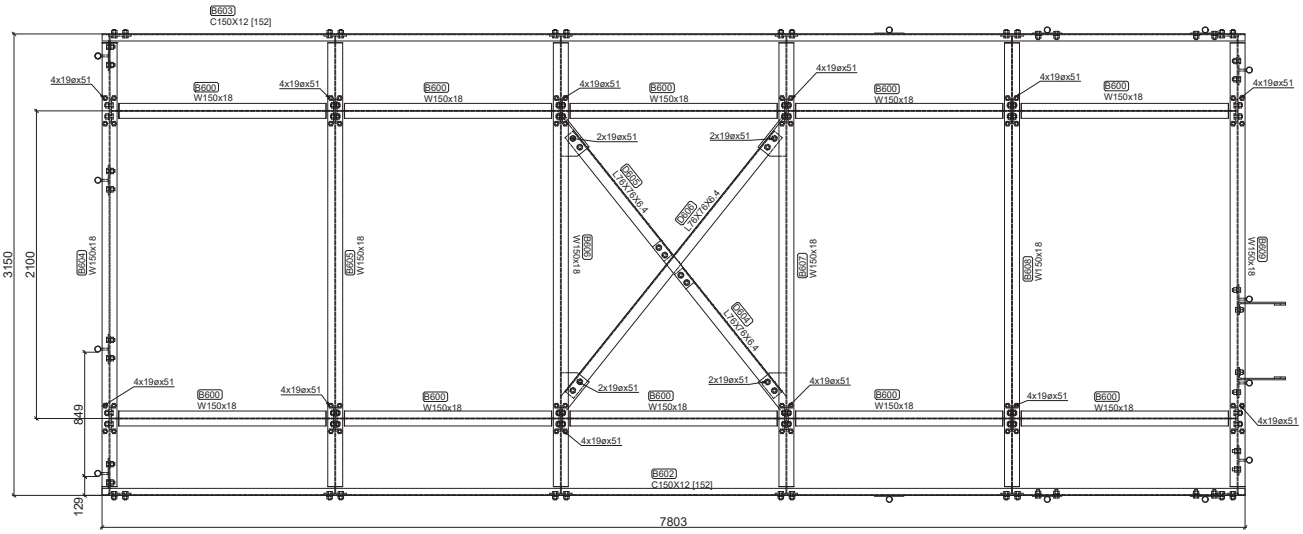

VIEW PLAN

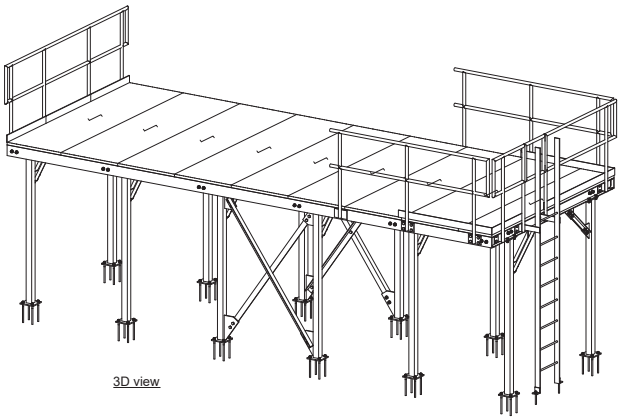

3D view

PROJET :

IQALUIT
WASTEWATER TREATMENT
PLANT

DFA TANK PLATEFORM

-TOUS L'ACIER EST GALVANISÉ
-ALL STEEL IS GALVANIZED

-CAILLEBOTIS (19W4) 1½x3 / 16
GALVANIZED STEEL

ALL WELDING
COMPLIES WITH CWB
STANDARDS

Rev.	Date	Par	Description
REV-B	2019-04-11	Moise Harvey	CCN-010-REV-B

STRUCTURES M.H. inc.
ENTREPRENEUR GÉNÉRAL
1670 Av. de la Technologie, Alma QC J8J 1E0
Téléphone : 418 480-2186 Télécopieur : 418 668-9235
structures.mh@gmail.com
RBQ : 5612-0215-01

Date : 11-avr.-19

INGÉNIEUR : Jean trudeau

Client : Kudlik Const.

Projet : DFA Tank Plateform With Railing and Lader

No. Projet : MH.2018.0840_ST

Détaillé par : Julie Lajoie

TITRE : ELEVATION BASE PLATE
PLATEFORM DFA

Soudure : ETKXXXLECT	No. Dessin : ST-604
Trou : 13/16"Ø o/n	
Acier : 300W,350W,G40.21	
Peinture: Aucun,Galvanisé,Peint	Séquence : REV-B

Marque	Quantité	Description	Longueur	Nuance	Finition	Poids	Poids total
B600	10	Poutre					
b6000	10	W150x18	1515.1	350W	Peint	60.126	601.259
p6000	20	PLT9.5x76x152.4	152.4	G40.21		1.909	38.185
	30					63.944	639.445
	30						639.445

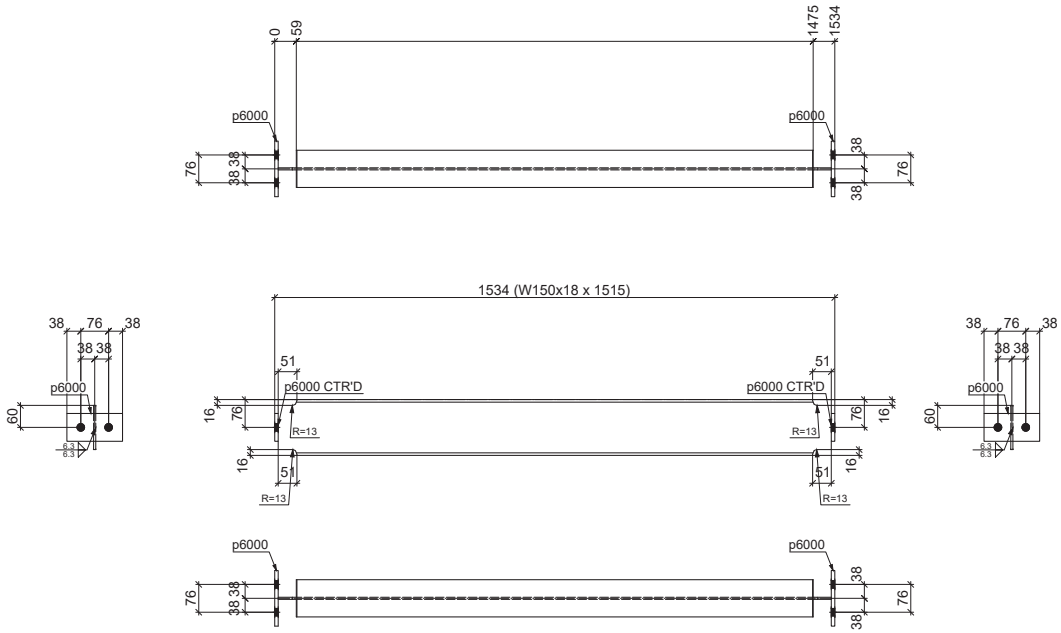

10 - B600 W150x18

d=153 b=102 t=7.1 w=5.8 k=19

Grid reference (5/E), (5/E), (5/E), (/E), (4/E), (/E), (5/E), (5/E), (5/E), (4/E)

Rev.	Date	Par	Description
REV-B	2019-04-11	Moise Harvey	Révision CNN-018 REV

Projet : DFA Tank Plateform With Railing and Lader

No. Projet : MH.2018.0840_ST

Statut : Révisé	Commentaire :	
Détaillé par : Julie Lajoie	Trou : 13/16"Ø u/n	Client : Kudlik Const.
Vérifié par: Jean trudeau	Soudure : E70XXELECT	No. Dessin : B600
STRUCTURES M.H. inc. ENTREPRENEUR GÉNÉRAL	Acier : 350W	
	Peinture: Peint	Sequence : REV-B
	Date : 2018-11-28	

Quantité	Description	Longueur	Finition
40	19.1x A325	44	

Marque	Quantité	Description	Longueur	Nuance	Finition	Poids	Poids total
B604	1	Poutre					
b6003	1	W150x18	3120.7	350W	Peint	123.841	123.841
p6003	2	PLT12.7x163.6x263.8	263.8	G40.21		5.383	10.765
p6000	2	PLT9.5x76.2x152.4	152.4	G40.21		1.914	3.829
	5					138.435	138.435
	5						138.435

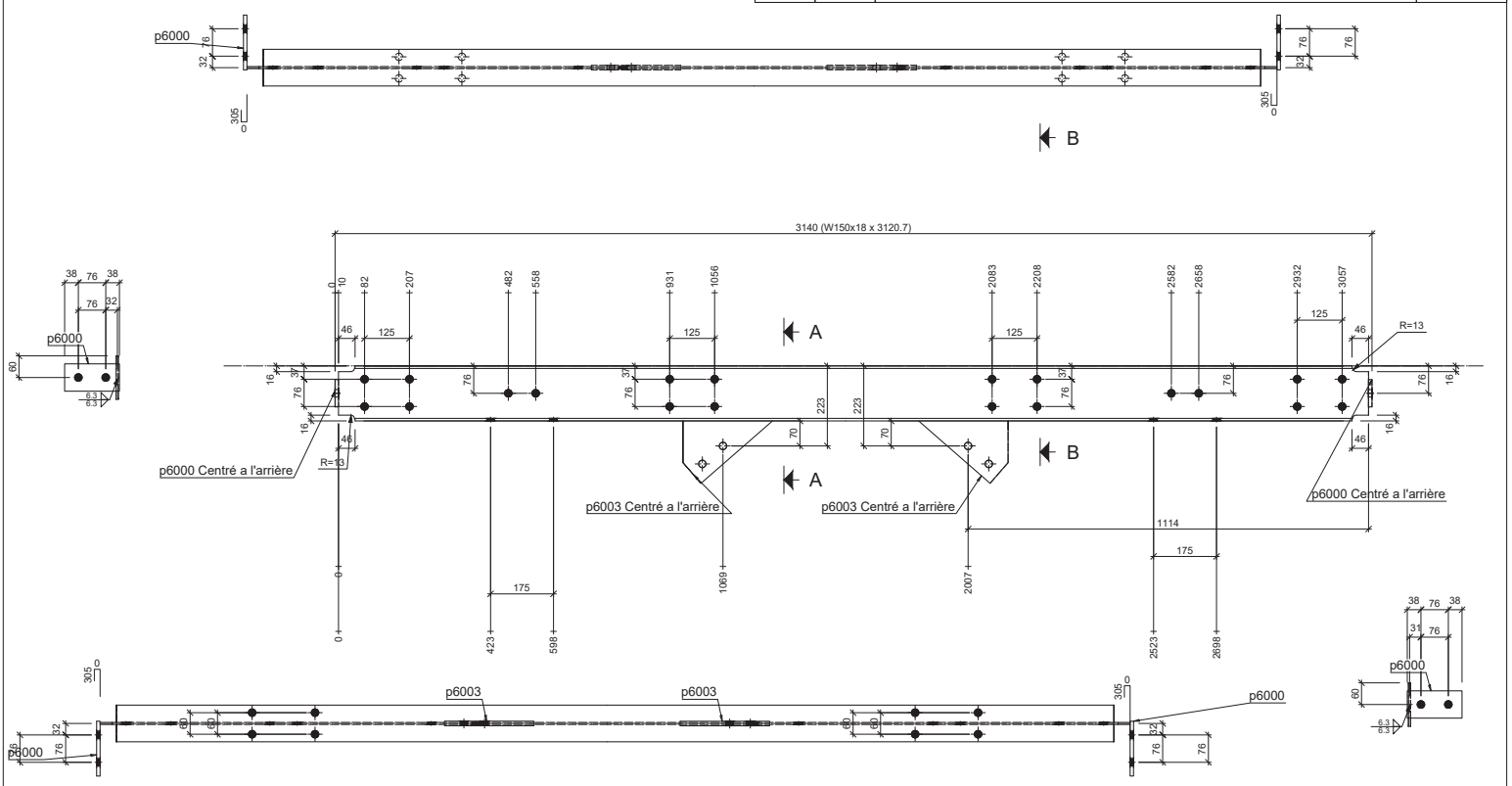

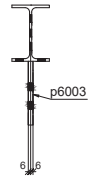

Section A - A

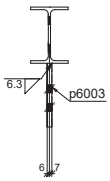

Section B - B

1 - B604 W150x18

d=153 b=102 t=7.1 w=5.8 k=19

Grid reference (E/4)

Quantité	Description	Longueur	Finition
8	19 1/4 A325	51	
4	19 1/4 A325	44	

REV-B	2019-04-11	Moise Harvey	Révision CNN-018 REV
Rev.	Date	Par	Description

Projet : DFA Tank Plateform With Railing and Lader

No. Projet : MH.2018.0840_ST

Statut : Révisé	Commentaire :	
Détaillé par : Julie Lajoie	Trou : 13/16"Ø u/n	Client : Kudlik Const.
Vérifié par: Jean trudeau	Soudure : E70XXELECT	No. Dessin : B604
STRUCTURES M.H. inc. ENTREPRENEUR GÉNÉRAL	Acier : 350W	
	Peinture: Peint	Sequence : REV-B
	Date : 2018-11-28	

REGISTERED PROFESSIONAL ENGINEER J. TRUDEAU LICENCE NT/NU

Marque	Quantité	Description	Longueur	Nuance	Finition	Poids	Poids total
B605	1	Poutre					
b6001	1	W150x18	3120.7	350W	Peint	123.841	123.841
p6003	2	PLT12.7x163.6x263.8	263.8	G40.21		5.383	10.765
p6000	2	PLT9.5x76.2x152.4	152.4	G40.21		1.914	3.829
	5					138.435	138.435
	5						138.435

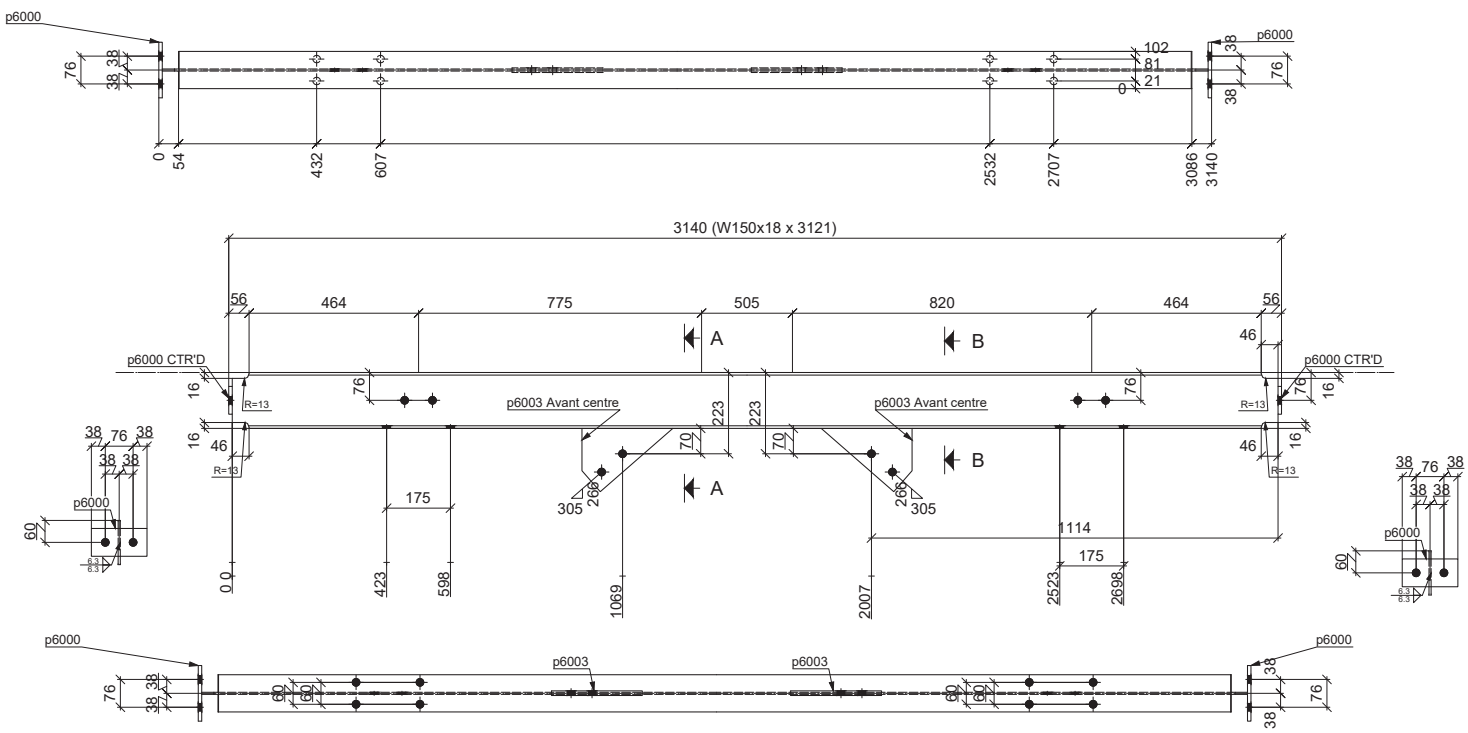

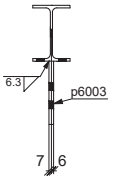

Section A - A

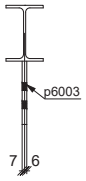

Section B - B

1 - B605 W150x18

d=153 b=102 t=7.1 w=5.8 k=19

Grid reference (E/)

Quantité	Description	Longueur	Finition
2	19.1x A325	61	
4	19.1x A325	44	

REV-B	2019-04-11	Moise Harvey	Révision CNN-018 REV
Rev.	Date	Par	Description

Projet : DFA Tank Plateform With Railing and Lader

No. Projet : MH.2018.0840_ST

Statut : Révisé	Commentaire :	
Détaillé par : Julie Lajoie	Trou : 13/16"Ø u/n	Client : Kudlik Const.
Vérifié par: Jean trudeau	Soudure : E70XXELECT	No. Dessin : B605
STRUCTURES M.H. inc. ENTREPRENEUR GÉNÉRAL	Acier : 350W	
	Peinture: Peint	Sequence : REV-B
	Date : 2018-11-28	

TOUTES LES SOUDURES ONT ÉTÉ RÉALISER SOUS TOUT CONFORME A LA CERTIFICATION DE LA CWB
CSA W47.1

Marque	Quantité	Description	Longueur	Nuance	Finition	Poids	Poids total
B606	1	Poutre					
b6001	1	W150x18	3120.7	350W	Peint	123.841	123.841
p6005	2	PLT12.7x188x304.2	304.2	G40.21		7.058	14.115
p6003	2	PLT12.7x163.6x263.8	263.8	G40.21		5.383	10.765
p6000	2	PLT9.5x76.2x152.4	152.4	G40.21		1.914	3.829
	7					152.550	152.550
	7						152.550

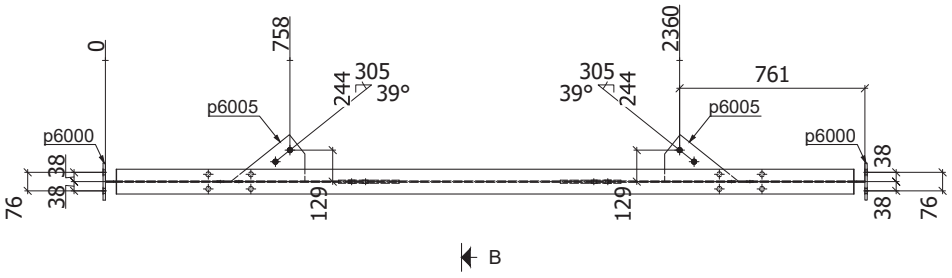

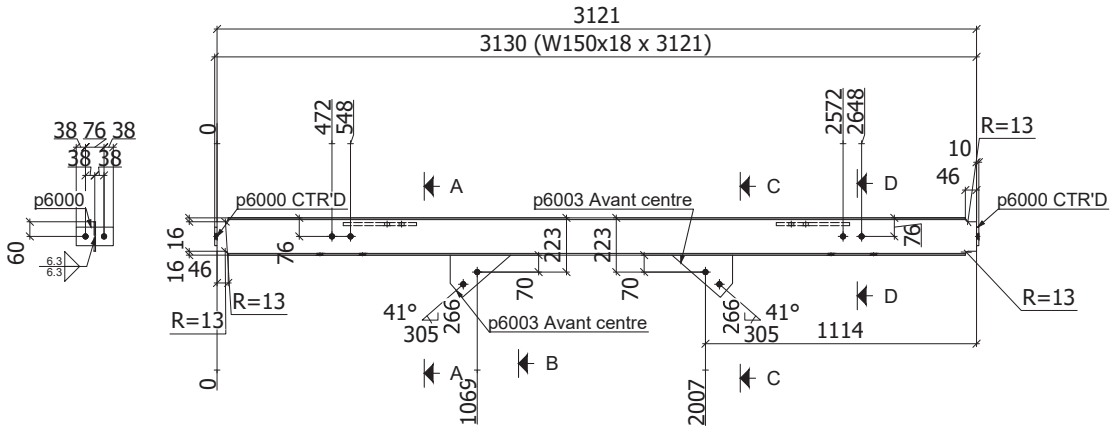

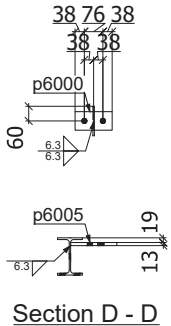

Section D - D

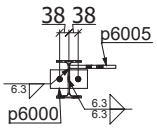

Section A - A

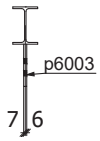

Section B - B

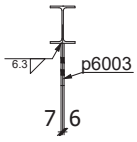

Section C - C

1 - B606 W150x18
d=153 b=102 t=7 w=6 k=19
Grid reference (E/)

Quantité	Description	Longueur	Finition
2	PL 1/4 A36	61	
4	PL 1/4 A36	44	

REV-B	2019-04-11	Moise Harvey	CCN-010-REV-B
Rev.	Date	Par	Description

Projet : DFA Tank Plateform With Railing and Lader
No. Projet : MH.2018.0840_ST

Statut : Révisé	Commentaire :	
Détaillé par : Julie Lajoie	Trou : 13/16"Ø u/n	Client : Kudlik Const.
Vérifié par: Jean trudeau	Soudure : E70XXELECT	No. Dessin : B606
STRUCTURES M.H. inc. ENTREPRENEUR GÉNÉRAL	Acier : 350W	
	Peinture: Peint	Sequence : REV-B
	Date : 11-avr.-19	

Marque	Quantité	Description	Longueur	Nuance	Finition	Poids	Poids total
B607	1	Poutre					
b6001	1	W150x18	3120.7	350W	Peint	123.841	123.841
p6005	2	PLT12.7x188x304.2	304.2	G40.21		7.058	14.115
p6003	2	PLT12.7x163.6x263.8	263.8	G40.21		5.383	10.765
p6000	2	PLT9.5x76.2x152.4	152.4	G40.21		1.914	3.829
	7					152.550	152.550
	7						152.550

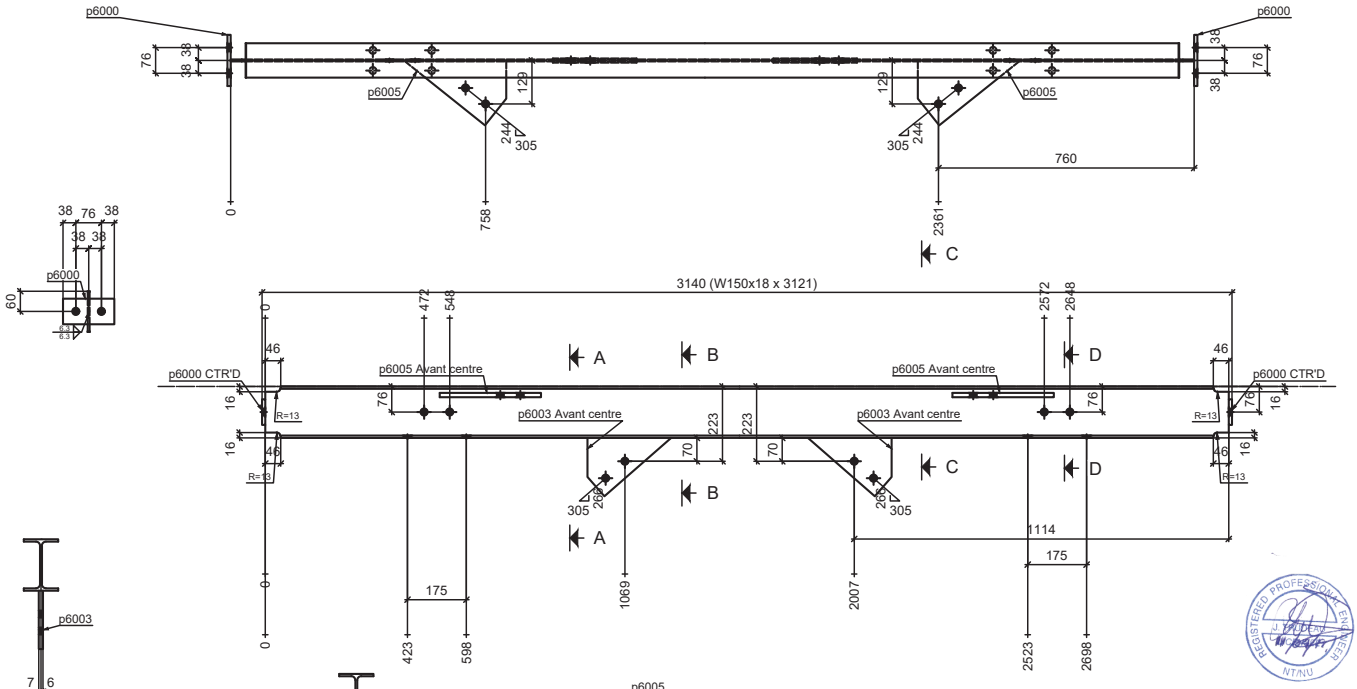

Section B - B

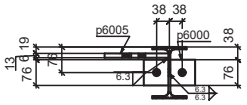

Section A - A

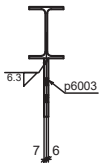

Section C - C

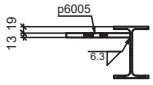

Section D - D

1 - B607 W150x18

d=153 b=102 t=7.1 w=5.8 k=19

Grid reference (E/5)

REV-B	2019-04-11	Moise Harvey	Révision CNN-018 REV
Rev.	Date	Par	Description

Projet : DFA Tank Plateform With Railing and Lader

No. Projet : MH.2018.0840_ST

Statut : Révisé	Commentaire :	
Détaillé par : Julie Lajoie	Trou : 13/16"Ø u/n	Client : Kudlik Const.
Vérifié par: Jean trudeau	Soudure : E70XXELECT	No. Dessin : B607
STRUCTURES M.H. inc. ENTREPRENEUR GÉNÉRAL	Acier : 350W	
	Peinture: Peint	Sequence : REV-B
	Date : 2018-11-28	

Marque	Quantité	Description	Longueur	Nuance	Finition	Poids	Poids total
B608	1	Poutre					
b6006	1	W150x18	3120.7	350W	Peint	123.841	123.841
p6003	2	PLT12.7x163.6x263.8	263.8	G40.21		5.383	10.765
p6000	2	PLT9.5x76.2x152.4	152.4	G40.21		1.914	3.829
	5					138.435	138.435
	5						138.435

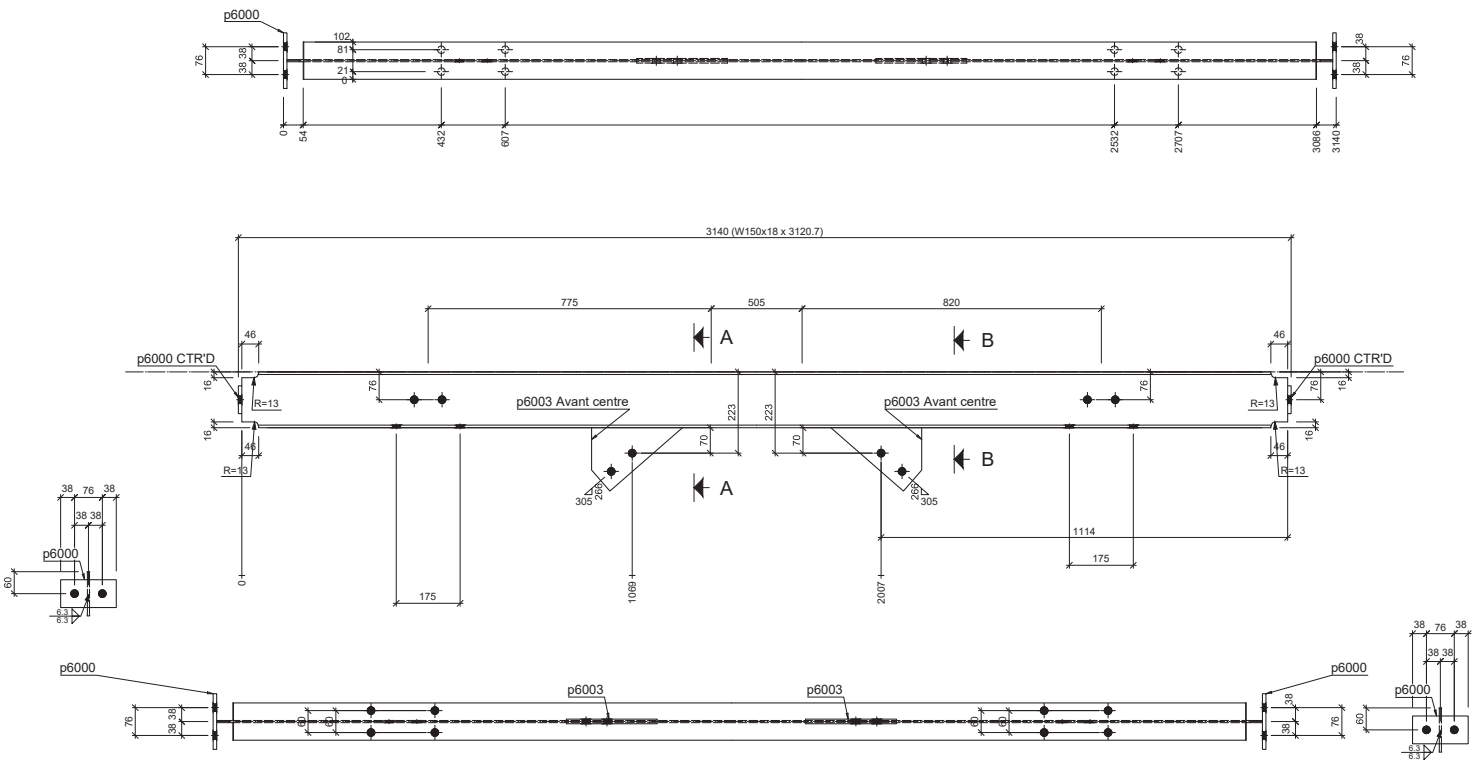

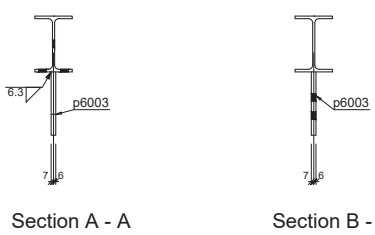

Section A - A

Section B - B

1 - B608 W150x18

d=153 b=102 t=7.1 w=5.8 k=19

Grid reference (E/5)

Quantité	Description	Longueur	Finition
12	19.1x A325	51	
4	19.1x A325	44	

REV-B	2019-04-11	Moise Harvey	Révision CNN-018 REV
Rev.	Date	Par	Description

Projet : DFA Tank Plateform With Railing and Lader

No. Projet : MH.2018.0840_ST

Statut : Révisé	Commentaire :	
Détaillé par : Julie Lajoie	Trou : 13/16"Ø u/n	Client : Kudlik Const.
Vérifié par: Jean trudeau	Soudure : E70XXELECT	No. Dessin : B608
STRUCTURES M.H. inc. ENTREPRENEUR GÉNÉRAL	Acier : 350W	
	Peinture: Peint	Sequence : REV-B
	Date : 2018-11-28	

Marque	Quantité	Description	Longueur	Nuance	Finition	Poids	Poids total
B609	1	Poutre					
b6011	1	W150x18	3120.7	350W	Peint	123.841	123.841
p6003	2	PLT12.7x163.6x263.8	263.8	G40.21		5.383	10.765
p6000	2	PLT9.5x76.2x152.4	152.4	G40.21		1.914	3.829
	5					138.435	138.435
	5						138.435

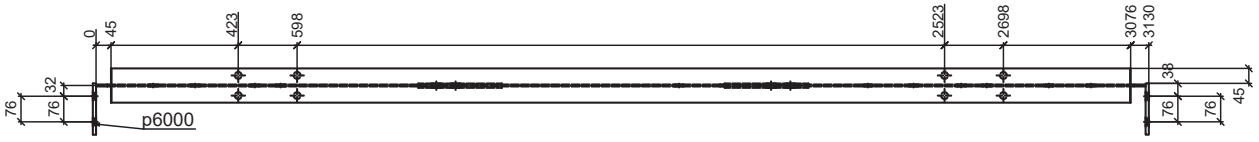

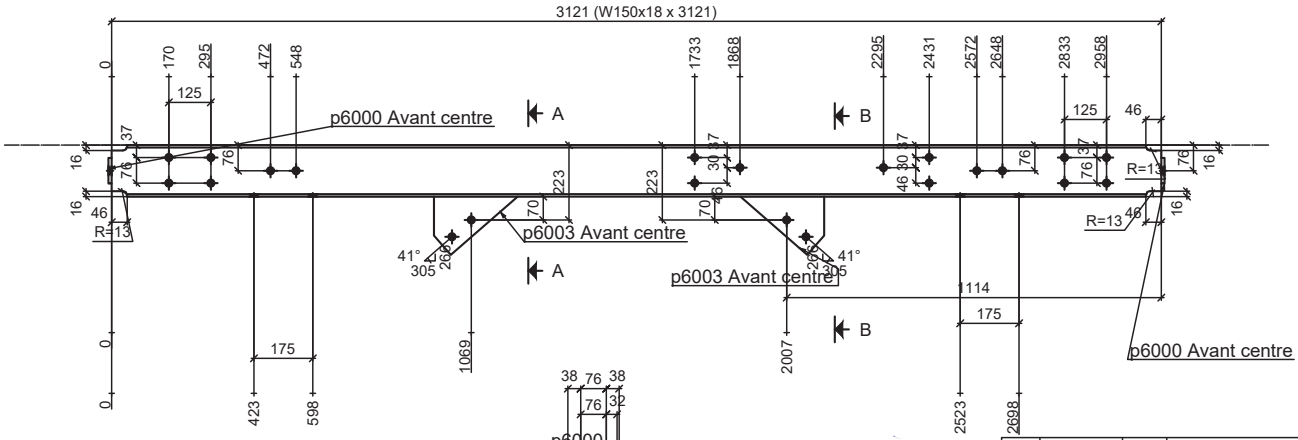

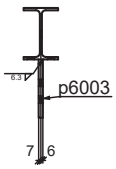

Section A - A

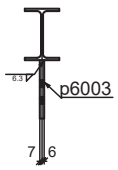

Section B - B

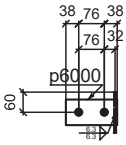

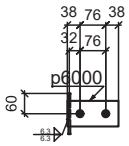

1 - B609 W150x18

d=153 b=102 t=7 w=6 k=19

Grid reference (E/)

REV-B	2019-04-11	Moise Harvey	Révision CNN-018 REV
Rev.	Date	Par	Description

Projet : DFA Tank Plateform With Railing and Lader

No. Projet : MH.2018.0840_ST

Statut : Révisé	Commentaire :	
Détaillé par : Julie Lajoie	Trou : 13/16"Ø u/n	Client : Kudlik Const.
Vérifié par: Jean trudeau	Soudure : E70XXELECT	No. Dessin : B609
STRUCTURES M.H. inc. ENTREPRENEUR GÉNÉRAL	Acier : 350W	
	Peinture: Peint	Sequence : REV-B
	Date : 2018-11-28	

Marque	Quantité	Description	Longueur	Nuance	Finition	Poids	Poids total
C600	2	Poteau					
c6000	2	HSS 88.9X88.9X6.35	2227.0	350W-CL.C	Peint	77.573	155.146
bp6000	2	PLT12.5x208.9x208.9	208.9	G40.21		9.440	18.881
p6002	2	PLT12.7x162.9x241.5	241.5	G40.21		5.156	10.312
p6001	2	PLT12x102x241.3	241.3	G40.21		5.111	10.223
	8					97.281	194.562
	8						194.562

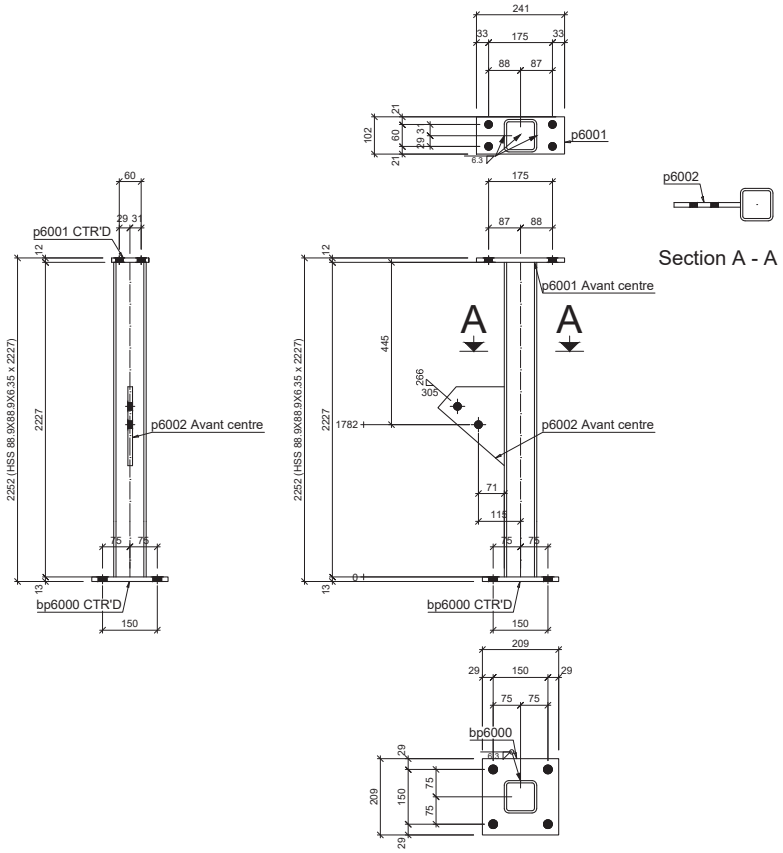

2 - C600 HSS 88.9X88.9X6.35

d=88.9 b=88.9 t=6.3 w=6.3 k=0

Grid reference (E/4), (E/)

Rev.	Date	Par	Description
REV-B	2019-04-11	Moise Harvey	Révision CNN-018 REV

Projet : DFA Tank Plateform With Railing and Lader

No. Projet : MH.2018.0840_ST

Statut : Révisé	Commentaire :	
Détaillé par : Julie Lajoie	Trou : 13/16"Ø u/n	Client : Kudlik Const.
Vérifié par: Jean trudeau	Soudure : E70XXELECT	No. Dessin : C600
STRUCTURES M.H. inc ENTREPRENEUR GÉNÉRAL	Acier : 350W-CL.C	
	Peinture: Peint	Sequence : REV-B
	Date : 2018-11-28	

Quantité	Description	Longueur	Finition

Marque	Quantité	Description	Longueur	Nuance	Finition	Poids	Poids total
C601	2	Poteau					
c6000	2	HSS 88.9X88.9X6.35	2227.0	350W-CL.C	Peint	77.573	155.146
bp6000	2	PLT12.5x208.9x208.9	208.9	G40.21		9.440	18.881
p6002	2	PLT12.7x162.9x241.5	241.5	G40.21		5.156	10.312
p6001	2	PLT12x102x241.3	241.3	G40.21		5.111	10.223
	8					97.281	194.562
	8						194.562

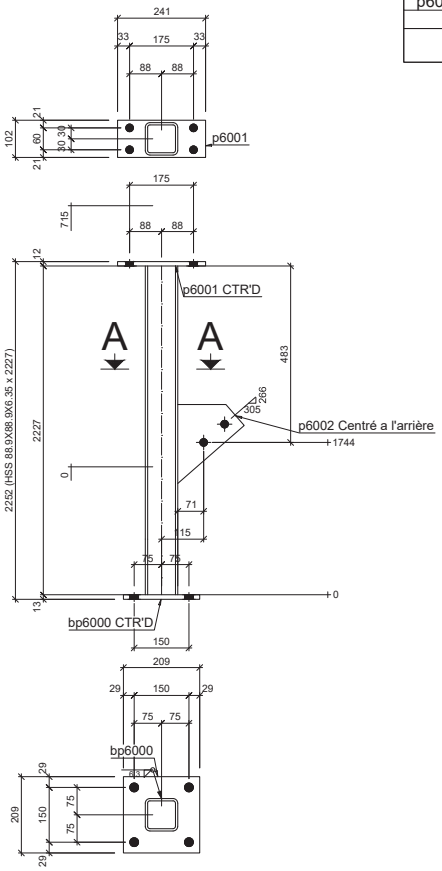

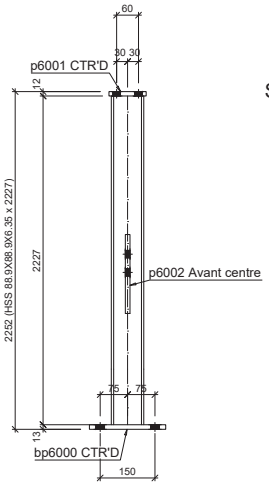

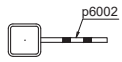

Section A - A

2 - C601 HSS 88.9X88.9X6.35

d=88.9 | b=88.9 | t=6.3 | w=6.3 | k=0

Grid reference (E/5), (E/)

Rev.	Date	Par	Description
REV-B	2019-04-11	Moise Harvey	Révision CNN-018 REV

Projet : DFA Tank Plateform With Railing and Lader

No. Projet : MH.2018.0840_ST

Statut : Révisé	Commentaire :	
Détaillé par : Julie Lajoie	Trou : 13/16"Ø u/n	Client : Kudlik Const.
Vérifié par: Jean trudeau	Soudure : E70XXELECT	No. Dessin : C601
STRUCTURES M.H. inc ENTREPRENEUR GÉNÉRAL	Acier : 350W-CL.C	
	Peinture: Peint	Sequence : REV-B
	Date : 2018-11-28	

Quantité	Description	Longueur	Finition

Marque	Quantité	Description	Longueur	Nuance	Finition	Poids	Poids total
C602	1	Poteau					
c6000	1	HSS 88.9X88.9X6.35	2227.0	350W-CL.C	Peint	77.573	77.573
bp6000	1	PLT12.5x208.9x208.9	208.9	G40.21		9.440	9.440
p6002	1	PLT12.7x162.9x241.5	241.5	G40.21		5.156	5.156
p6001	1	PLT12x102x241.3	241.3	G40.21		5.111	5.111
	4					97.281	97.281
	4						97.281

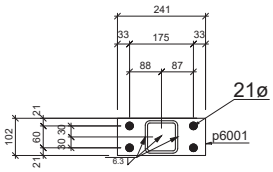

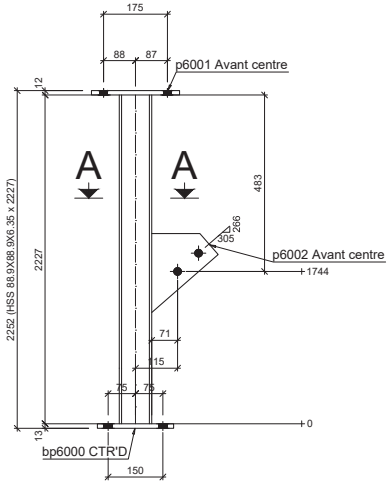

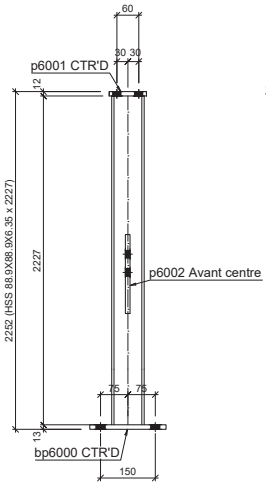

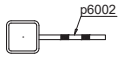

Section A - A

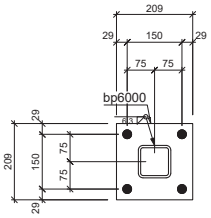

1 - C602 HSS 88.9X88.9X6.35

d=88.9 | b=88.9 | t=6.3 | w=6.3 | k=0

Grid reference (E/4)

Rev.	Date	Par	Description
REV-B	2019-04-11	Moise Harvey	Révision CNN-018 REV

Projet : DFA Tank Plateform With Railing and Lader

No. Projet : MH.2018.0840_ST

Statut : Révisé	Commentaire :	
Détaillé par : Julie Lajoie	Trou : 13/16"Ø u/n	Client : Kudlik Const.
Vérifié par: Jean trudeau	Soudure : E70XXELECT	No. Dessin : C602
	Acier : 350W-CL.C	
	Peinture: Peint	Sequence : REV-B
	Date : 2018-11-28	

STRUCTURES M.H. inc ENTREPRENEUR GÉNÉRAL

Quantité	Description	Longueur	Finition

Marque	Quantité	Description	Longueur	Nuance	Finition	Poids	Poids total
C603	1	Poteau					
c6000	1	HSS 88.9X88.9X6.35	2227.0	350W-CL.C	Peint	77.573	77.573
bp6000	1	PLT12.5x208.9x208.9	208.9	G40.21		9.440	9.440
p6002	1	PLT12.7x162.9x241.5	241.5	G40.21		5.156	5.156
p6001	1	PLT12x102x241.3	241.3	G40.21		5.111	5.111
	4					97.281	97.281
	4						97.281

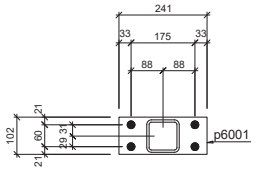

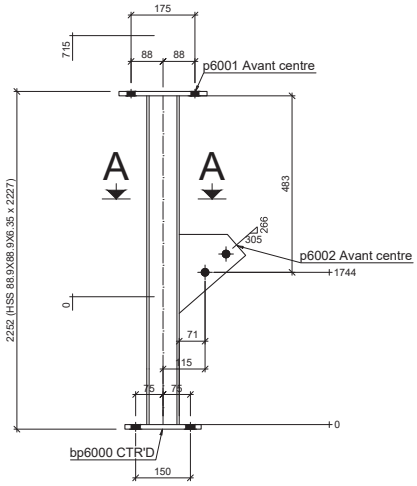

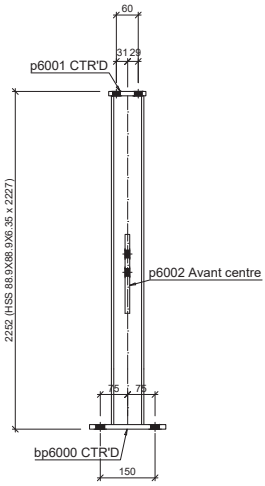

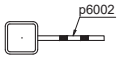

Section A - A

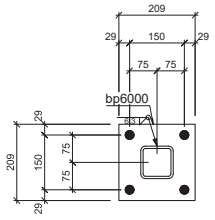

1 - C603 HSS 88.9X88.9X6.35

d=88.9 | b=88.9 | t=6.3 | w=6.3 | k=0

Grid reference (E/)

Rev.	Date	Par	Description
REV-B	2019-04-11	Moise Harvey	Révision CNN-018 REV

Projet : DFA Tank Plateform With Railing and Lader

No. Projet : MH.2018.0840_ST

Statut : Révisé	Commentaire :	
Détaillé par : Julie Lajoie	Trou : 13/16"Ø u/n	Client : Kudlik Const.
Vérifié par: Jean trudeau	Soudure : E70XXELECT	No. Dessin : C603
	Acier : 350W-CL.C	
	Peinture: Peint	Sequence : REV-B
	Date : 2018-11-28	

STRUCTURES M.H. inc ENTREPRENEUR GÉNÉRAL

REGISTERED PROFESSIONAL ENGINEER J. TRUDEAU NT/NU

Quantité	Description	Longueur	Finition

Marque	Quantité	Description	Longueur	Nuance	Finition	Poids	Poids total
C604	1	Poteau					
c6000	1	HSS 88.9X88.9X6.35	2227.0	350W-CL.C	Peint	77.573	77.573
p6006	1	PLT12.7x221.5x370.1	370.1	G40.21		10.557	10.557
bp6000	1	PLT12.5x208.9x208.9	208.9	G40.21		9.440	9.440
p6004	1	PLT12.7x185.6x322.7	322.7	G40.21		7.244	7.244
p6002	1	PLT12.7x162.9x241.5	241.5	G40.21		5.156	5.156
p6001	1	PLT12x102x241.3	241.3	G40.21		5.111	5.111
	6					115.082	115.082
	6						115.082

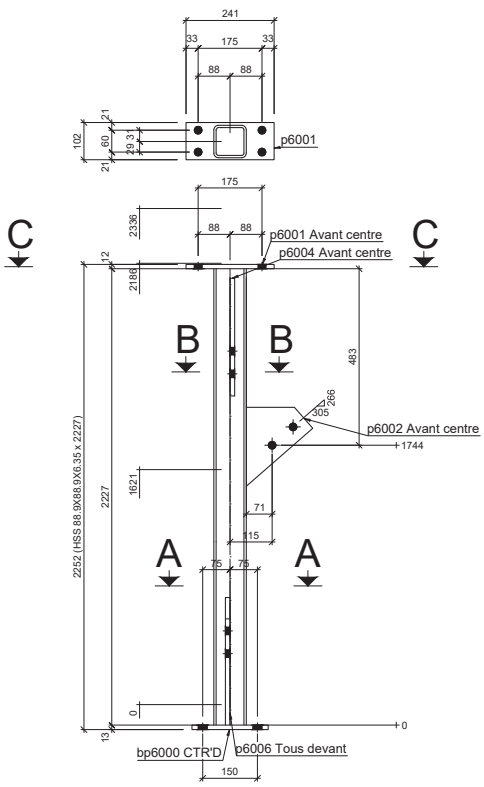

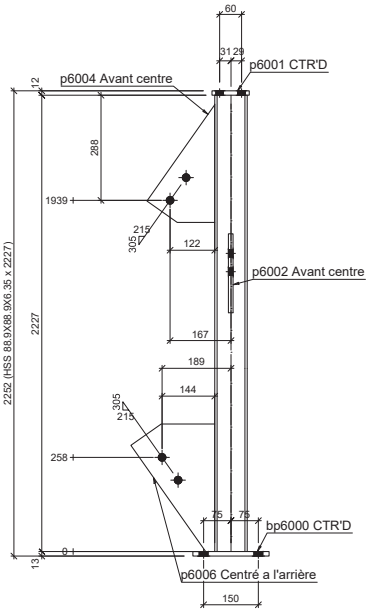

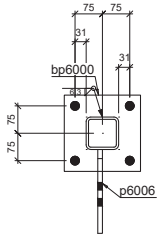

Section A - A

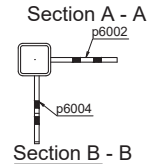

Section B - B

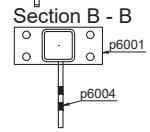

Section C - C

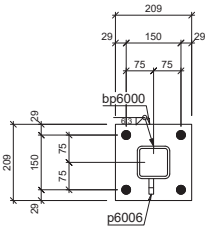

1 - C604 HSS 88.9X88.9X6.35

d=88.9 b=88.9 t=6.3 w=6.3 k=0

Grid reference (E/)

Rev.	Date	Par	Description
REV-B	2019-04-11	Moise Harvey	Révision CNN-018 REV

Projet : DFA Tank Plateform With Railing and Lader

No. Projet : MH.2018.0840_ST

Statut : Révisé	Commentaire :	
Détaillé par : Julie Lajoie	Trou : 13/16"Ø u/n	Client : Kudlik Const.
Vérifié par: Jean trudeau	Soudure : E70XXELECT	No. Dessin : C604
STRUCTURES M.H. inc. ENTREPRENEUR GÉNÉRAL	Acier : 350W-CL.C	
	Peinture: Peint	Sequence : REV-B
	Date : 2018-11-28	

Quantité	Description	Longueur	Finition
4	19.1x A325	51	

Marque	Quantité	Description	Longueur	Nuance	Finition	Poids	Poids total
C605	1	Poteau					
c6000	1	HSS 88.9X88.9X6.35	2227.0	350W-CL.C	Peint	77.573	77.573
p6006	1	PLT12.7x221.5x370.1	370.1	G40.21		10.557	10.557
bp6000	1	PLT12.5x208.9x208.9	208.9	G40.21		9.440	9.440
p6004	1	PLT12.7x185.6x322.7	322.7	G40.21		7.244	7.244
p6002	1	PLT12.7x162.9x241.5	241.5	G40.21		5.156	5.156
p6001	1	PLT12x102x241.3	241.3	G40.21		5.111	5.111
	6					115.082	115.082
	6						115.082

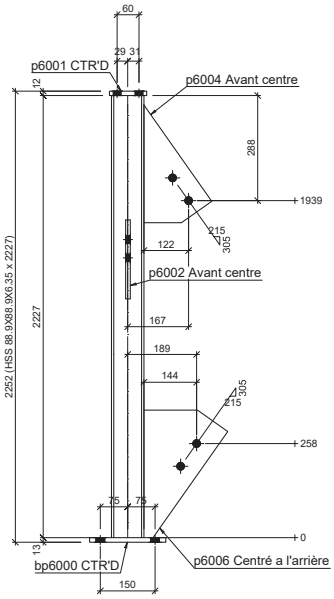

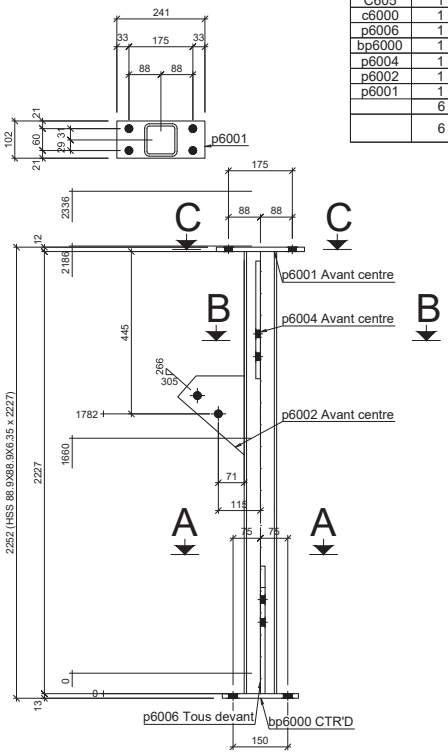

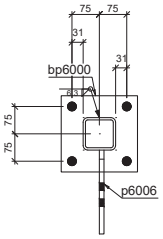

Section A - A

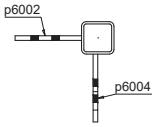

Section B - B

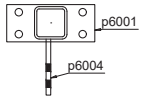

Section C - C

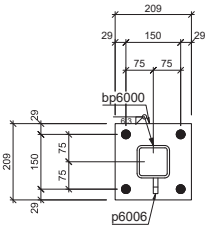

1 - C605 HSS 88.9X88.9X6.35

d=88.9 | b=88.9 | t=6.3 | w=6.3 | k=0

Grid reference (E/)

REV-B	2019-04-11	Moise Harvey	Révision CNN-018 REV
Rev.	Date	Par	Description

Projet : DFA Tank Plateform With Railing and Lader

No. Projet : MH.2018.0840_ST

Statut : Révisé	Commentaire :	
Détaillé par : Julie Lajoie	Trou : 13/16"Ø u/n	Client : Kudlik Const.
Vérifié par: Jean trudeau	Soudure : E70XXELECT	No. Dessin : C605
	Acier : 350W-CL.C	
	Peinture: Peint	Sequence : REV-B
	Date : 2018-11-28	

STRUCTURES M.H. inc ENTREPRENEUR GÉNÉRAL

Marque	Quantité	Description	Longueur	Nuance	Finition	Poids	Poids total
C606	1	Poteau					
c6000	1	HSS 88.9X88.9X6.35	2227.0	350W-CL.C	Peint	77.573	77.573
p6006	1	PLT12.7x221.5x370.1	370.1	G40.21		10.557	10.557
bp6000	1	PLT12.5x208.9x208.9	208.9	G40.21		9.440	9.440
p6004	1	PLT12.7x185.6x322.7	322.7	G40.21		7.244	7.244
p6002	1	PLT12.7x162.9x241.5	241.5	G40.21		5.156	5.156
p6001	1	PLT12x102x241.3	241.3	G40.21		5.111	5.111
	6					115.082	115.082
	6						115.082

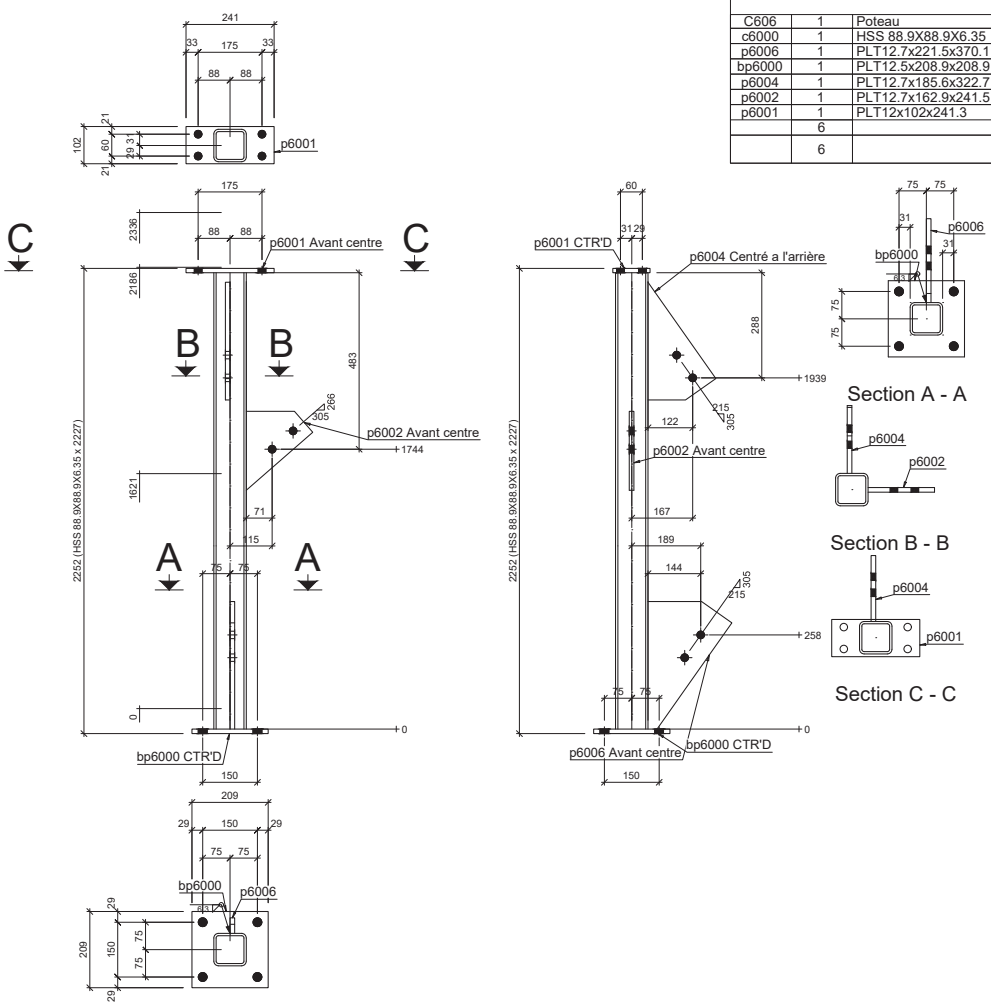

1 - C606 HSS 88.9X88.9X6.35

d=88.9 b=88.9 t=6.3 w=6.3 k=0

Grid reference (E/5)

Quantité	Description	Longueur	Finition
4	19.1x A325	51	

Rev.	Date	Par	Description
REV-B	2019-04-11	Moise Harvey	Révision CNN-018 REV

Projet : DFA Tank Plateform With Railing and Lader

No. Projet : MH.2018.0840_ST

Statut : Révisé	Commentaire :	
Détaillé par : Julie Lajoie	Trou : 13/16"Ø u/n	Client : Kudlik Const.
Vérifié par: Jean trudeau	Soudure : E70XXELECT	No. Dessin : C606
STRUCTURES M.H. inc. ENTREPRENEUR GÉNÉRAL	Acier : 350W-CL.C	
	Peinture: Peint	Sequence : REV-B
	Date : 2018-11-28	

Marque	Quantité	Description	Longueur	Nuance	Finition	Poids	Poids total
C607	1	Poteau					
c6000	1	HSS 88.9X88.9X6.35	2227.0	350W-CL.C	Peint	77.573	77.573
p6006	1	PLT12.7x221.5x370.1	370.1	G40.21		10.557	10.557
bp6000	1	PLT12.5x208.9x208.9	208.9	G40.21		9.440	9.440
p6004	1	PLT12.7x185.6x322.7	322.7	G40.21		7.244	7.244
p6002	1	PLT12.7x162.9x241.5	241.5	G40.21		5.156	5.156
p6001	1	PLT12x102x241.3	241.3	G40.21		5.111	5.111
	6					115.082	115.082
	6						115.082

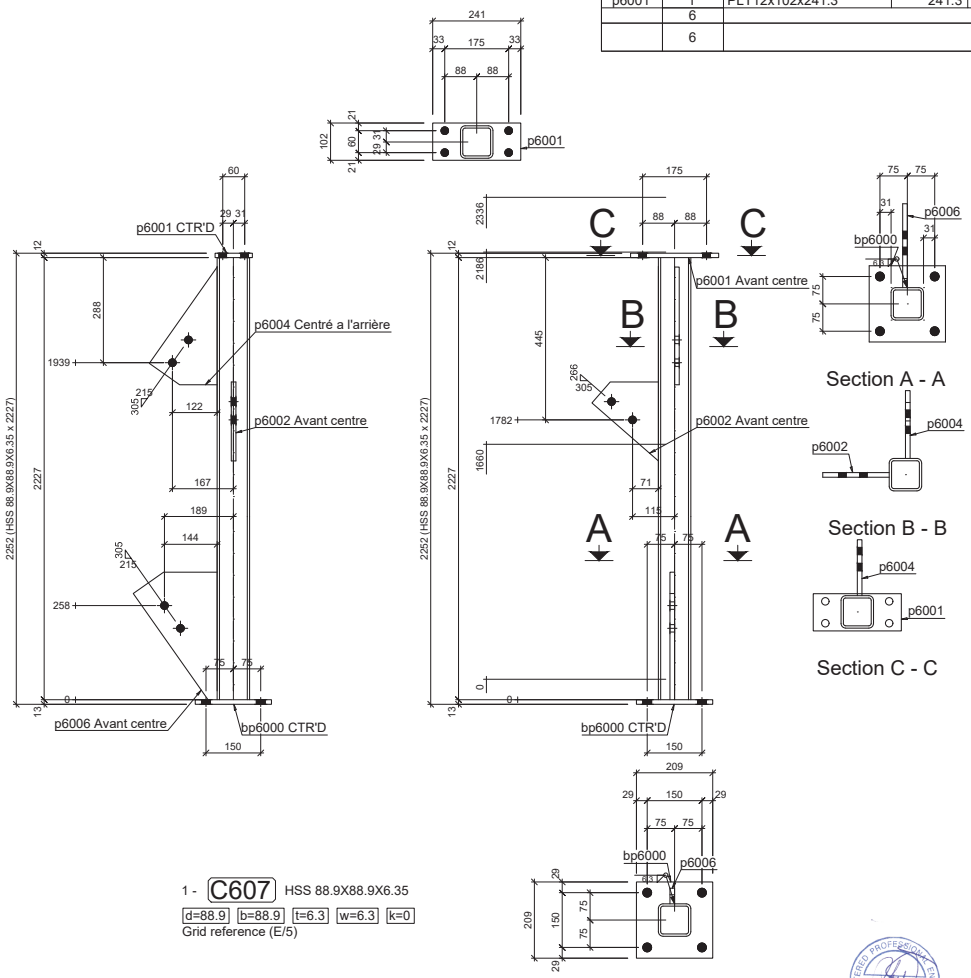

1 - C607 HSS 88.9X88.9X6.35

d=88.9 b=88.9 t=6.3 w=6.3 k=0

Grid reference (E/5)

Quantité	Description	Longueur	Finition
2	19.1x A325	51	

REV-B	2019-04-11	Moise Harvey	Révision CNN-018 REV
Rev.	Date	Par	Description

Projet : DFA Tank Plateform With Railing and Lader

No. Projet : MH.2018.0840_ST

Statut : Révisé	Commentaire :	
Détaillé par : Julie Lajoie	Trou : 13/16"Ø u/n	Client : Kudlik Const.
Vérifié par: Jean trudeau	Soudure : E70XXELECT	No. Dessin : C607
STRUCTURES M.H. inc. ENTREPRENEUR GÉNÉRAL	Acier : 350W-CL.C	
	Peinture: Peint	Sequence : REV-B
	Date : 2018-11-28	

Marque	Quantité	Description	Longueur	Nuance	Finition	Poids	Poids total
C608	1	Poteau					
c6000	1	HSS 88.9X88.9X6.35	2227.0	350W-CL.C	Peint	77.573	77.573
bp6000	1	PLT12.5x208.9x208.9	208.9	G40.21		9.440	9.440
p6002	1	PLT12.7x162.9x241.5	241.5	G40.21		5.156	5.156
p6001	2	PLT12x102x241.3	241.3	G40.21		5.111	10.223
	5					102.392	102.392
	5						102.392

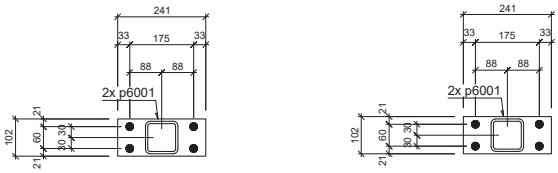

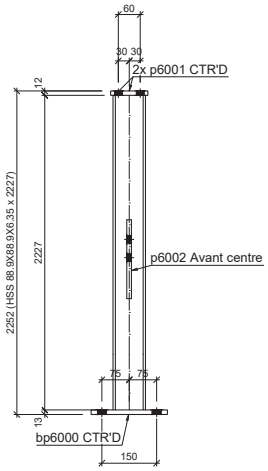

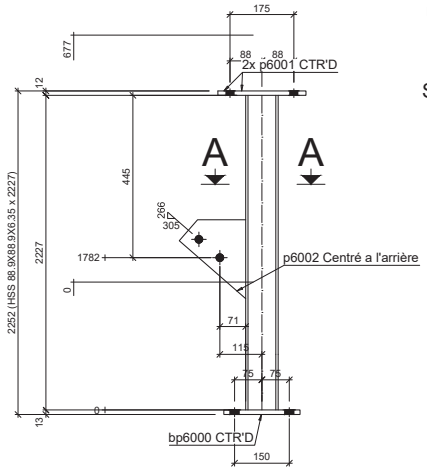

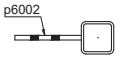

Section A - A

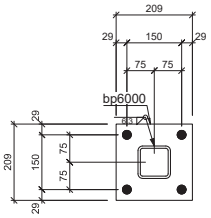

1 - C608 HSS 88.9X88.9X6.35

d=88.9 | b=88.9 | t=6.3 | w=6.3 | k=0

Grid reference (E/5)

Rev.	Date	Par	Description
REV-B	2019-04-11	Moise Harvey	Révision CNN-018 REV

Projet : DFA Tank Plateform With Railing and Lader

No. Projet : MH.2018.0840_ST

Statut : Révisé	Commentaire :	
Détaillé par : Julie Lajoie	Trou : 13/16"Ø u/n	Client : Kudlik Const.
Vérifié par: Jean trudeau	Soudure : E70XXELECT	No. Dessin : C608
STRUCTURES M.H. inc ENTREPRENEUR GÉNÉRAL	Acier : 350W-CL.C	
	Peinture: Peint	Sequence : REV-B
	Date : 2018-11-28	

REGISTERED PROFESSIONAL ENGINEER NT/NU

Quantité	Description	Longueur	Finition

Marque	Quantité	Description	Longueur	Nuance	Finition	Poids	Poids total
C609	1	Poteau					
c6000	1	HSS 88.9X88.9X6.35	2227.0	350W-CL.C	Peint	77.573	77.573
bp6000	1	PLT12.5x208.9x208.9	208.9	G40.21		9.440	9.440
p6002	1	PLT12.7x162.9x241.5	241.5	G40.21		5.156	5.156
p6001	1	PLT12x102x241.3	241.3	G40.21		5.111	5.111
	4					97.281	97.281
	4						97.281

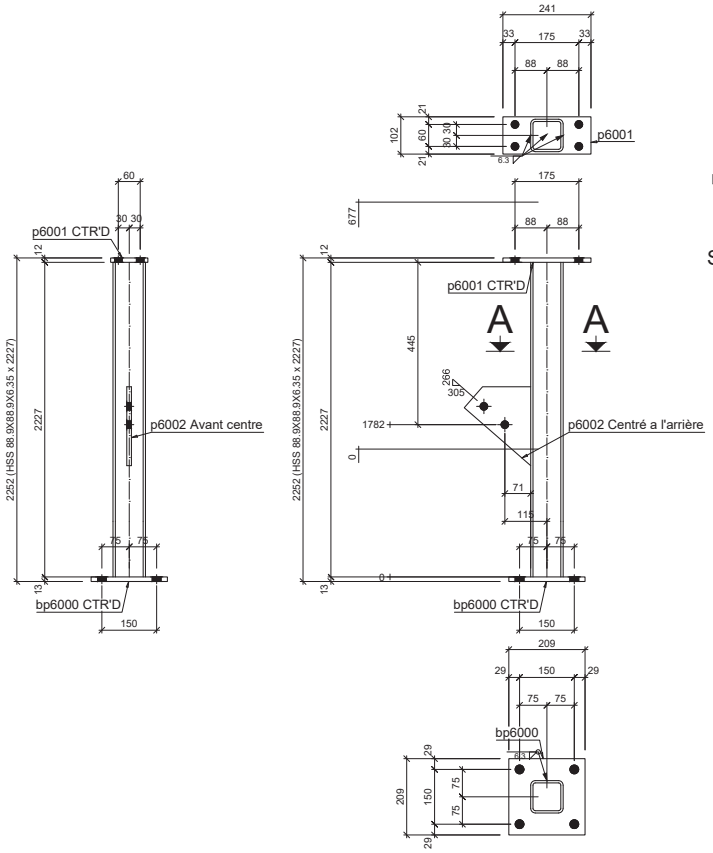

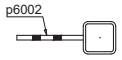

Section A - A

1 - C609 HSS 88.9X88.9X6.35

d=88.9 | b=88.9 | t=6.3 | w=6.3 | k=0

Grid reference (E/)

Rev.	Date	Par	Description
REV-B	2019-04-11	Moise Harvey	Révision CNN-018 REV

Projet : DFA Tank Plateform With Railing and Lader

No. Projet : MH.2018.0840_ST

Statut : Révisé	Commentaire :	
Détaillé par : Julie Lajoie	Trou : 13/16"Ø u/n	Client : Kudlik Const.
Vérifié par: Jean trudeau	Soudure : E70XXELECT	No. Dessin : C609
STRUCTURES M.H. inc ENTREPRENEUR GÉNÉRAL	Acier : 350W-CL.C	
	Peinture: Peint	Sequence : REV-B
	Date : 2018-11-28	

Quantité | Description | Longueur | Finition

Marque	Quantité	Description	Longueur	Nuance	Finition	Poids	Poids total
D600	12	Contreventement					
d6001	12	L51X51X4.8	664.9	300W	Peint	5.277	63.328
	12					5.277	63.328
	12						63.328

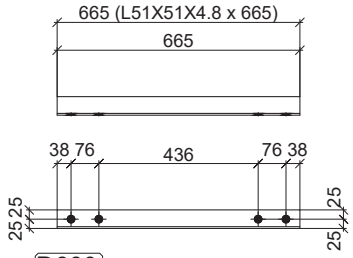

12 - D600 L51X51X4.8

Grid reference (E/), (E/5), (E/5), (E/4), (E/5), (E/5), (E/4), (E/), (E/), (E/), (E/), (E/)

Rev.	Date	Par	Description
REV-B	2019-04-11	Moise Harvey	Révision CNN-018 REV

Projet : DFA Tank Plateform With Railing and Lader

No. Projet : MH.2018.0840_ST

Statut : Révisé	Commentaire :	
Détaillé par : Julie Lajoie	Trou : 13/16"Ø u/n	Client : Kudlik Const.
Vérifié par: Jean trudeau	Soudure : E70XXELECT	No. Dessin : D600
STRUCTURES M.H. inc. ENTREPRENEUR GÉNÉRAL	Acier : 300W	
	Peinture: Peint	Sequence : REV-B
	Date : 2018-11-28	

REGISTERED PROFESSIONAL ENGINEER NT/NU

Quantité	Description	Longueur	Finition
24	19.1x A325	51	

Marque	Quantité	Description	Longueur	Nuance	Finition	Poids	Poids total
D601	12	Contreventement					
d6000	12	L51X51X4.8	723.9	300W	Peint	5.746	68.947
	12					5.746	68.947
	12						68.947

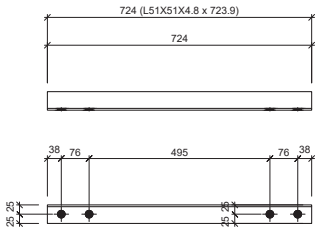

12 - D601 L51X51X4.8
Grid reference (E/), (E/5), (E/), (E/4), (E/4), (E/5), (E/), (E/5), (E/5), (E/), (E/), (E/)

Rev.	Date	Par	Description
REV-B	2019-04-11	Moise Harvey	Révision CNN-018 REV

Projet : DFA Tank Plateform With Railing and Lader
No. Projet : MH.2018.0840_ST

Statut : Révisé	Commentaire :	
Détaillé par : Julie Lajoie	Trou : 13/16"Ø u/n	Client : Kudlik Const.
Vérifié par: Jean trudeau	Soudure : E70XXELECT	No. Dessin : D601
STRUCTURES M.H. inc. ENTREPRENEUR GÉNÉRAL	Acier : 300W	
	Peinture: Peint	Sequence : REV-B
	Date : 2018-11-28	

Quantité	Description	Longueur	Finition
24	19.1x A325	51	

Marque	Quantité	Description	Longueur	Nuance	Finition	Poids	Poids total
D602	2	Contreventement					
d6002	2	L76X76X6.4	2323.2	300W	Peint	36.878	73.755
	2					36.878	73.755
	2						73.755

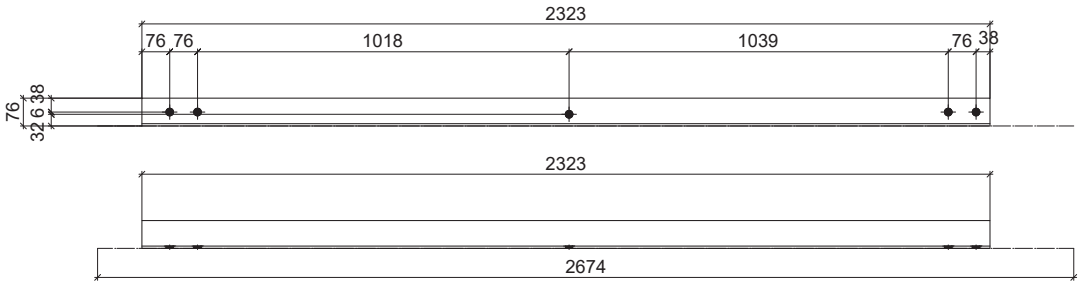

2 - D602 L76X76X6.4

REV-B	2019-04-11	Moise Harvey	CCN-010-REV-B
Rev.	Date	Par	Description

Projet : DFA Tank Plateform With Railing and Lader

No. Projet : MH.2018.0840_ST

Statut : Révisé	Commentaire :	
Détaillé par : Julie Lajoie	Trou : 13/16"Ø u/n	Client : Kudlik Const.
Vérifié par: Jean trudeau	Soudure : E70XXELECT	No. Dessin : D602
STRUCTURES M.H. inc. ENTREPRENEUR GÉNÉRAL	Acier : 300W	
	Peinture: Peint	Sequence : REV-B
	Date : 2018-11-28	

Quantité	Description	Longueur	Finition
1	19.1x A325	44	

Marque	Quantité	Description	Longueur	Nuance	Finition	Poids	Poids total
D603	2	Contreventement					
d6003	2	L76X76X6.4	2323.2	300W	Peint	36.878	73.755
	2					36.878	73.755
	2						73.755

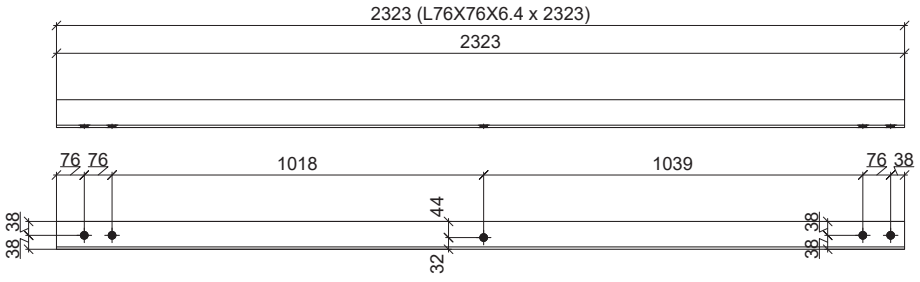

2 - D603 L76X76X6.4
Grid reference (5/E), (5/E)

Rev.	Date	Par	Description
REV-B	2019-04-11	Moise Harvey	CCN-010-REV-B

Projet : DFA Tank Plateform With Railing and Lader
No. Projet : MH.2018.0840_ST

Statut : Révisé	Commentaire :	
Détaillé par : Julie Lajoie	Trou : 13/16"Ø u/n	Client : Kudlik Const.
Vérifié par: Jean trudeau	Soudure : E70XXELECT	No. Dessin : D603
STRUCTURES M.H. inc ENTREPRENEUR GÉNÉRAL	Acier : 300W	
	Peinture: Peint	Sequence : REV-B
	Date : 2018-11-28	

Quantité	Description	Longueur	Finition
1	19.1x A305	44	
1	19.1x A325	44	

Marque	Quantité	Description	Longueur	Nuance	Finition	Poids	Poids total
D604	1	Contreventement					
d6005	1	L76X76X6.4	1082.6	300W	Peint	17.185	17.185
	1					17.185	17.185
	1						17.185

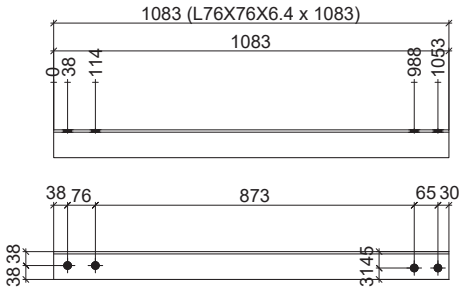

1 - D604 L76X76X6.4
Grid reference (/E)

REV-B	2019-04-11	Moise Harvey	CCN-010-REV-B
Rev.	Date	Par	Description

Projet : DFA Tank Plateform With Railing and Lader
No. Projet : MH.2018.0840_ST

Statut : Révisé	Commentaire :	
Détaillé par : Julie Lajoie	Trou : 13/16"Ø u/n	Client : Kudlik Const.
Vérifié par: Jean trudeau	Soudure : E70XXELECT	No. Dessin : D604
STRUCTURES M.H. inc. ENTREPRENEUR GÉNÉRAL	Acier : 300W	
	Peinture: Peint	Sequence : REV-B
	Date : 2018-11-28	

REGISTERED PROFESSIONAL ENGINEER
J. TRUDEAU
NT/NU

Quantité	Description	Longueur	Finition
2	19.1x A325	51	

Marque	Quantité	Description	Longueur	Nuance	Finition	Poids	Poids total
D606	1	Contreventement					
d6004	1	L76X76X6.4	2279.3	300W	Peint	36.181	36.181
p6007	1	PLT12.7x76.2x365.8	365.8	G40.21		6.126	6.126
	2					42.307	42.307
	2						42.307

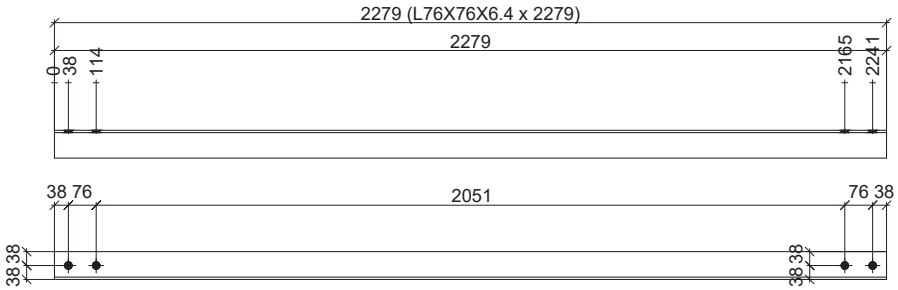

1 - D606 L76X76X6.4
Grid reference (/E)

Rev.	Date	Par	Description
REV-B	2019-04-11	Moise Harvey	CCN-010-REV-B

Projet : DFA Tank Plateform With Railing and Lader
No. Projet : MH.2018.0840_ST

Statut : Révisé	Commentaire :	
Détaillé par : Julie Lajoie	Trou : 13/16"Ø u/n	Client : Kudlik Const.
Vérifié par: Jean trudeau	Soudure : E70XXELECT	No. Dessin : D606
STRUCTURES M.H. inc. ENTREPRENEUR GÉNÉRAL	Acier : 300W	
	Peinture: Peint	Sequence : REV-B
	Date : 2018-11-28	

REGISTERED PROFESSIONAL ENGINEER J. YOLLE NT/NU

Quantité	Description	Longueur	Finition
2	19.1x A325	51	

TOUTES LES SOUDURES ONT ÉTÉ RÉALISER SOUS TOUT CONFORME A LA CERTIFICATION DE LA CWB
CSA W47.1

Marque	Quantité	Description	Longueur	Nuance	Finition	Poids	Poids total
M600	1	Garde-corps plinthe palier					
m6013	1	FL 10X102	1152.7	300W	Galvanisé	19.305	19.305
m6019	1	HSS 42X2.6	3150.0	G40.21	Galvanisé	17.446	17.446
m6011	2	FL 10X102	998.7	300W	Galvanisé	16.726	33.452
m6000	4	HSS 42X2.6	1232.2	G40.21	Galvanisé	6.824	27.298
m6017	1	HSS 42X2.6	1151.0	G40.21	Galvanisé	6.375	6.375
m6002	2	HSS 42X2.6	847.8	G40.21	Galvanisé	4.696	9.392
b6007	2	HSS 42X2.6	550.1	G40.21	Galvanisé	3.047	6.093
p6010	4	PLT6x125x200	200.0	G40.21	Galvanisé	2.596	10.384
p6011	4	PLT12.7x50x113	113.0	G40.21		1.242	4.967
m6010	2	HSS 42X2.6	149.2	G40.21	Galvanisé	0.826	1.652
	23					136.363	136.363
	23						136.363

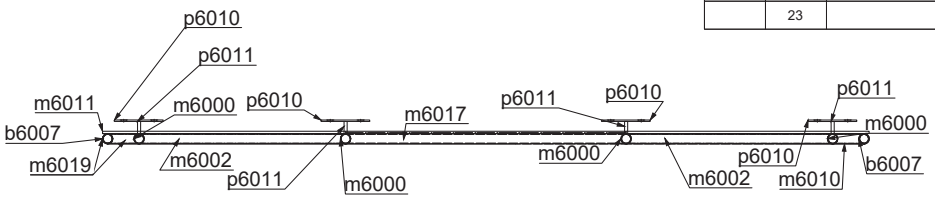

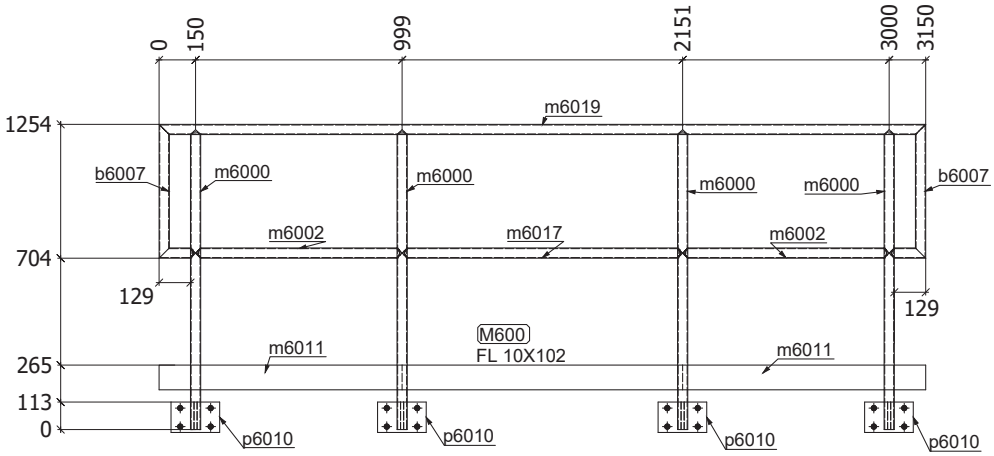

1 - M600 FL 10X102
d=102 b=10 t= w=10 k=
Grid reference (E/4)

Rev.	Date	Par	Description
REV-B	2019-04-11	Moise Harvey	CCN-010-REV-B

Projet : DFA Tank Plateform With Railing and Lader
No. Projet : MH.2018.0840_ST

Statut : Révisé	Commentaire :	
Détaillé par : Julie Lajoie	Trou : 13/16"Ø u/n	Client : Kudlik Const.
Vérifié par: Jean trudeau	Soudure : E70XXELECT	No. Dessin : M600
STRUCTURES M.H. inc. ENTREPRENEUR GÉNÉRAL	Acier : 300W	
	Peinture: Galvanisé	Sequence : REV-B
	Date : 10-avr.-19	

Quantité	Description	Longueur	Finition
16	19.1φ A325	44	

Marque	Quantité	Description	Longueur	Nuance	Finition	Poids	Poids total
M601	1	Echelle profil					
m6003	2	FL 10X76	3512.6	G40.21		44.122	88.243
p6013	2	PLT10x75x388	388.0	G40.21		5.036	10.073
m6001	8	D 20.00	490.5	G40.21		2.667	21.333
b6009	2	L3X3X3/8	76.2	A36		1.800	3.600
	14					123.250	123.250
	14						123.250

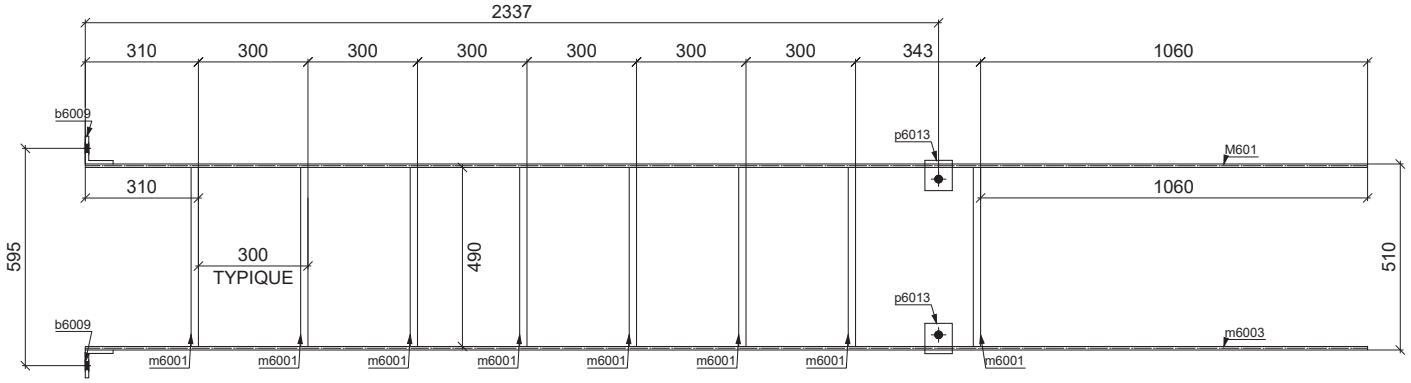

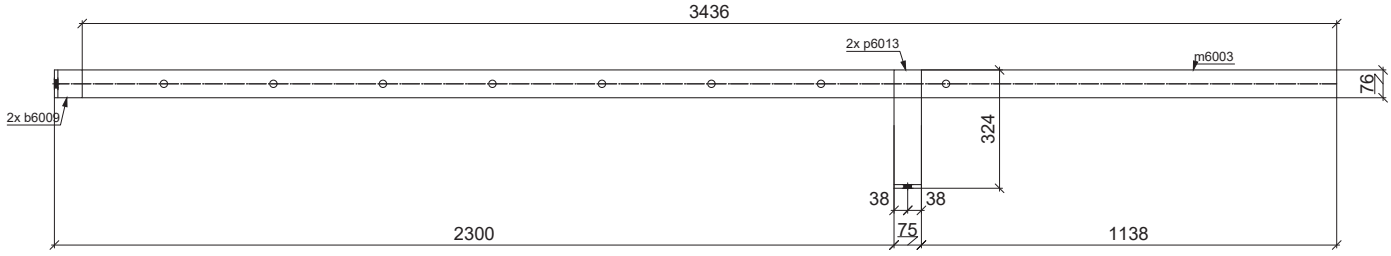

1 - M601 FL 10X76

REV-B	2019-04-11	Moise Harvey	CCN-010-REV-B
Rev.	Date	Par	Description

Projet : DFA Tank Plateform With Railing and Lader

No. Projet : MH.2018.0840_ST

Statut : Révisé	Commentaire :	
Détaillé par : Julie Lajoie	Trou : 13/16"Ø u/n	Client : Kudlik Const.
Vérifié par: Jean trudeau	Soudure : E70XXELECT	No. Dessin : M601
STRUCTURES M.H. inc ENTREPRENEUR GÉNÉRAL	Acier : G40.21	
	Peinture: Aucun	Sequence : REV-B
	Date : 2018-11-28	

REGISTERED PROFESSIONAL ENGINEER NTNU

Quantité	Description	Longueur	Finition

Marque	Quantité	Description	Longueur	Nuance	Finition	Poids	Poids total
M602	1	Garde-corps main courante palier					
m6004	1	HSS 42X2.6	2555.6	G40.21	Galvanisé	14.154	14.154
m6016	1	FL100X6	1351.9	G40.21	Galvanisé	14.038	14.038
m6000	3	HSS 42X2.6	1232.2	G40.21	Galvanisé	6.824	20.473
m6006	2	HSS 42X2.6	1076.8	G40.21	Galvanisé	5.964	11.927
b6005	1	HSS 42X2.6	550.1	350W-CL.C		3.047	3.047
p6010	3	PLT6x125x200	200.0	G40.21	Galvanisé	2.596	7.788
m6018	1	FL100X6	150.0	G40.21	Galvanisé	1.558	1.558
m6008	1	HSS 42X2.6	246.7	G40.21	Galvanisé	1.366	1.366
m6009	1	HSS 42X2.6	151.2	G40.21	Galvanisé	0.837	0.837
	14					75.188	75.188
	14						75.188

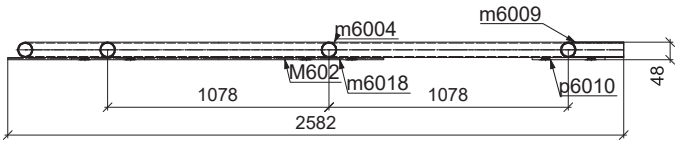

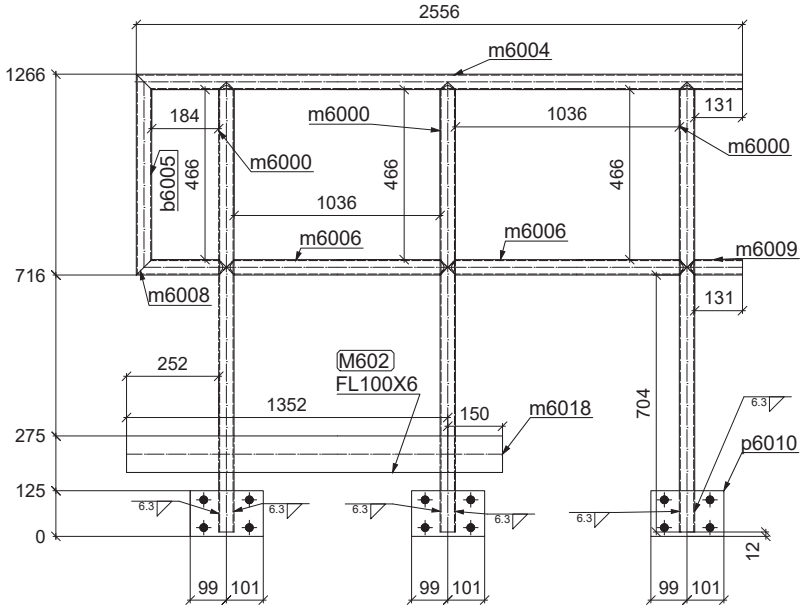

1 - M602 FL100X6

Quantité	Description	Longueur	Finition
8	19.1x A325	44	

Rev.	Date	Par	Description
REV-B	2019-04-11	Moise Harvey	CCN-010-REV-B

Projet : DFA Tank Plateform With Railing and Lader

No. Projet : MH.2018.0840_ST

Statut : Révisé	Commentaire :	
Détaillé par : Julie Lajoie	Trou : 13/16"Ø u/n	Client : Kudlik Const.
Vérifié par: Jean trudeau	Soudure : E70XXELECT	No. Dessin : M602
STRUCTURES M.H. inc. ENTREPRENEUR GÉNÉRAL	Acier : G40.21	
	Peinture: Galvanisé	Sequence : REV-B
	Date : 2018-11-28	

Marque	Quantité	Description	Longueur	Nuance	Finition	Poids	Poids total
M604	1	Garde-corps plinthe palier					
m6012	1	FL100X6	1822.4	G40.21	Galvanisé	18.923	18.923
m6020	1	HSS 42X2.6	1833.2	G40.21	Galvanisé	10.154	10.154
m6005	1	HSS 42X2.6	1254.0	G40.21	Galvanisé	6.946	6.946
m6000	1	HSS 42X2.6	1232.2	G40.21	Galvanisé	6.824	6.824
b6005	1	HSS 42X2.6	550.1	350W-CL.C		3.047	3.047
p6010	1	PLT6x125x200	200.0	G40.21	Galvanisé	2.596	2.596
p6015	1	PLT6x124x125	125.0	G40.21	Galvanisé	1.609	1.609
m6025	1	HSS 42X2.6	248.8	G40.21	Galvanisé	1.378	1.378
p6012	2	PLT12.7x50x113	113.0	G40.21	Galvanisé	1.242	2.484
	10					53.960	53.960
	10						53.960

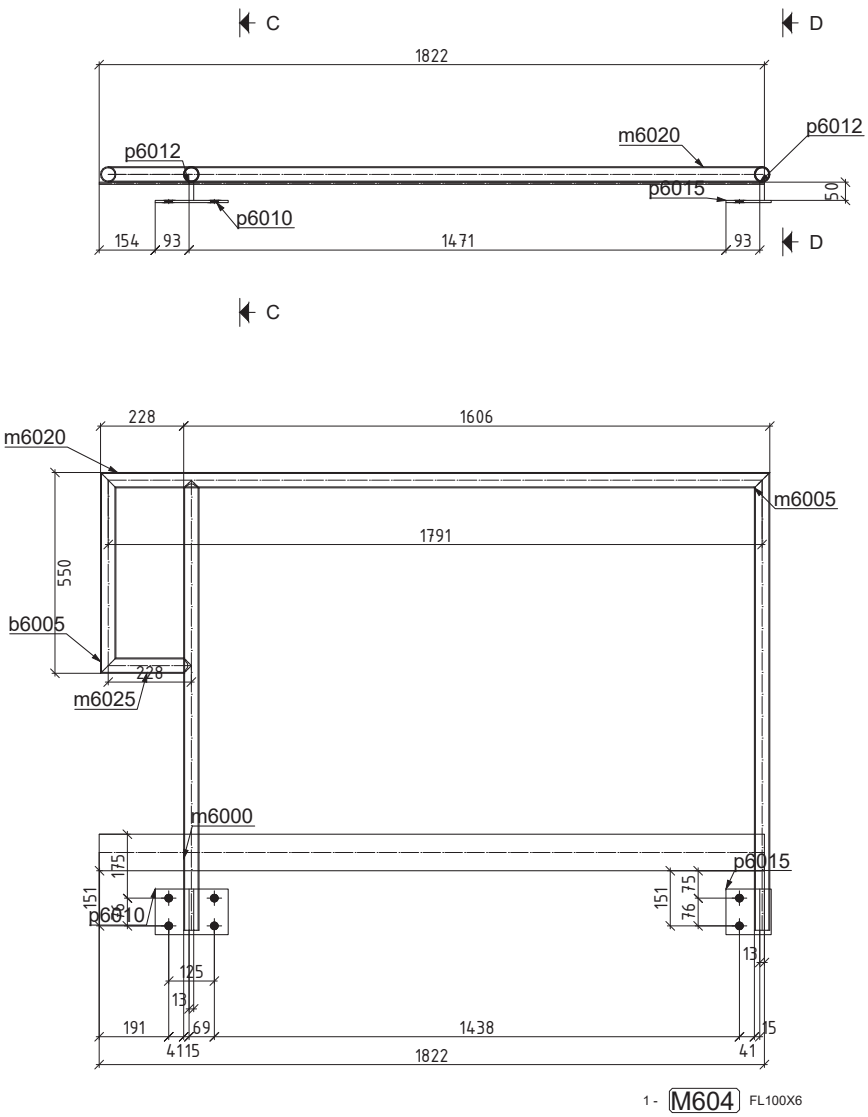

1 - M604 FL100X6

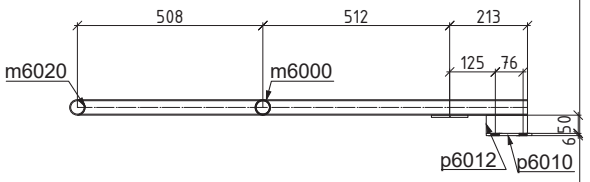

Section C - C

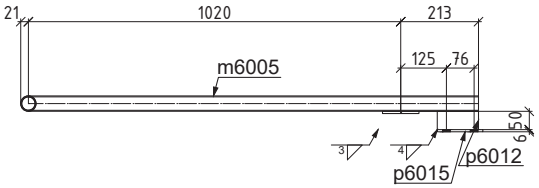

Section D - D

Quantité	Description	Longueur	Finition
6	19.1x A325	44	

REV-B	2019-04-11	Moise Harvey	CCN-010-REV-B
Rev.	Date	Par	Description

Projet : DFA Tank Plateform With Railing and Lader

No. Projet : MH.2018.0840_ST

Statut : Révisé	Commentaire :	
Détaillé par : Julie Lajoie	Trou : 13/16"Ø u/n	Client : Kudlik Const.
Vérifié par: Jean trudeau	Soudure : E70XXELECT	No. Dessin : M604
STRUCTURES M.H. inc. ENTREPRENEUR GÉNÉRAL	Acier : G40.21	
	Peinture: Galvanisé	Sequence : REV-B
	Date : 2018-11-28	

Marque	Quantité	Description	Longueur	Nuance	Finition	Poids	Poids total
M605	1	Garde-corps plinthe palier					
m6014	1	FL100X6	779.9	G40.21	Galvanisé	8.098	8.098
m6005	1	HSS 42X2.6	1254.0	G40.21	Galvanisé	6.946	6.946
m6000	1	HSS 42X2.6	1232.2	G40.21	Galvanisé	6.824	6.824
m6022	1	HSS 42X2.6	809.3	G40.21	Galvanisé	4.482	4.482
b6005	1	HSS 42X2.6	550.1	350W-CL.C		3.047	3.047
b6007	2	HSS 42X2.6	550.1	G40.21	Galvanisé	3.047	6.093
m6023	1	HSS 42X2.6	522.3	G40.21	Galvanisé	2.893	2.893
m6007	2	HSS 42X2.6	512.5	G40.21	Galvanisé	2.839	5.677
p6010	1	PLT6x125x200	200.0	G40.21	Galvanisé	2.596	2.596
p6014	1	PLT6x124x125	125.0	G40.21	Galvanisé	1.609	1.609
m6024	1	HSS 42X2.6	261.1	G40.21	Galvanisé	1.446	1.446
p6012	2	PLT12.7x50x113	113.0	G40.21	Galvanisé	1.242	2.484
p6016	1	PLT6x53.1x96	96.0	G40.21		0.529	0.529
b6008	2	13.5x2.3 CHS	100.0	350W-CL.C		0.140	0.280
	18					53.005	53.005
	18						53.005

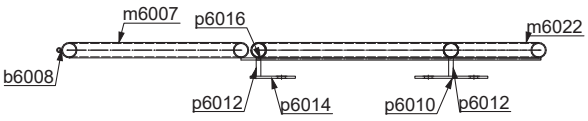

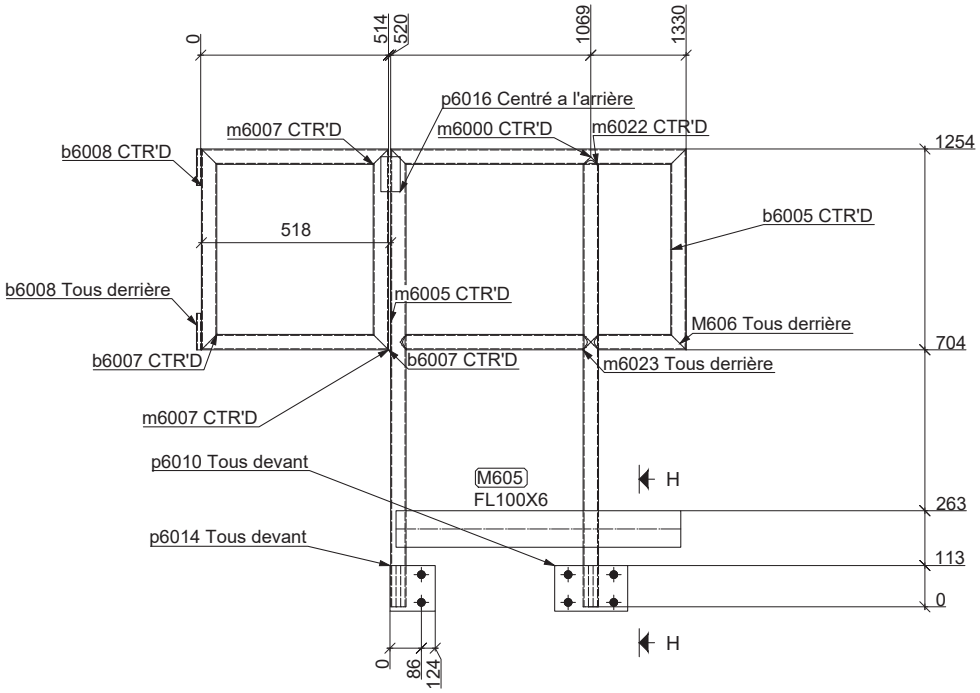

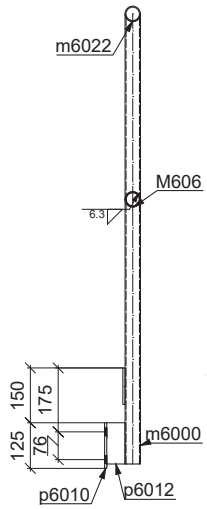

Section H - H

1 - M605 FL100X6

d=100 b=6 t= w=6 k=

Grid reference (E/)

Quantité	Description	Longueur	Finition
6	19.1x A325	44	

REV-B	2019-04-11	Moise Harvey	CCN-010-REV-B
Rev.	Date	Par	Description

Projet : DFA Tank Plateform With Railing and Lader

No. Projet : MH.2018.0840_ST

Statut : Révisé	Commentaire :	
Détaillé par : Julie Lajoie	Trou : 13/16"Ø u/n	Client : Kudlik Const.
Vérifié par: Jean trudeau	Soudure : E70XXELECT	No. Dessin : M605
STRUCTURES M.H. inc. ENTREPRENEUR GÉNÉRAL	Acier : G40.21	
	Peinture: Galvanisé	Sequence : REV-B
	Date : 2018-11-28	

SUBMITTALS IDENTIFICATION SHEET

PROJECT: Wastewater Treatment Plant Upgrade
Iqaluit, Nunavut

NUNAMI
STANTEC LIMITED
1088C Noble House
Iqaluit NU
www.stantec.com

CONTRACTOR: Kudlik Construction Ltd, Project 2018-062

Telephone: 867-979-1166

E-mail: srousseau@kudlik.biz

SUBCONTRACTOR: Structure MH

Person responsible: Moise Harvey

Telephone: (418)487-8772 E-mail: structures.mh@gmail.com

PRODUCT SUBMITTED:

☑ As Specified

☐ Alternate

SUPPLIER or MANUFACTURER:

Person responsible:

Telephone: E-mail:

DESCRIPTION OF SUBMITTAL:

# of pages:

Reference to drawings:

Reference to specs:

Division: 05 Section: 05 12 23 - 05 21 00

REMARKS:

Catwalk See page 2 and 4 for the picture and notch.

REVIEW AND COMMENTS (for use by Consultants):

STANTEC PROJECT #: 110126045 SUBMITTAL # STC-018rev1

This review by Stantec is for general conformance with the design concept of Stantec's design of the:

☐ Architectural ☐ Electrical
☑ Structural ☐ Other
☐ Mechanical

component(s) only and does not mean that Stantec has verified or approves the shop drawing(s). The Contractor remains solely responsible for the shop drawing(s) and this review by Stantec does not relieve the Contractor of the Contractor's responsibility for errors or omissions in the shop drawing(s) or for meeting all requirements of the contract documents. This review does not mean that Stantec approves the detailed design inherent in the shop drawing, responsibility for which shall remain with the Contractor submitting same, nor does this review mean that Stantec accepts any deviation of the shop drawing(s) from the contract documents. The Contractor is responsible for confirming all dimensions and correlating them at the job site, for all construction means, methods and techniques, and for coordination of construction work of all trades, including coordination of all shop drawings.

Stantec

☑ REVIEWED
☐ REVIEWED, AS NOTED
☐ REVISE AND RESUBMIT
☐ NOT REVIEWED

DATE 2019-02-07

BY pclyne

STANTEC PROJECT #: 110126045 SUBMITTAL # STC-018 rev 1

This review by Stantec is for general conformance with the design concept of Stantec's design of the:

☑ Architectural ☐ Electrical
☐ Structural ☐ Other
☐ Mechanical

component(s) only and does not mean that Stantec has verified or approves the shop drawing(s). The Contractor remains solely responsible for the shop drawing(s) and this review by Stantec does not relieve the Contractor of the Contractor's responsibility for errors or omissions in the shop drawing(s) or for meeting all requirements of the contract documents. This review does not mean that Stantec approves the detailed design inherent in the shop drawing, responsibility for which shall remain with the Contractor submitting same, nor does this review mean that Stantec accepts any deviation of the shop drawing(s) from the contract documents. The Contractor is responsible for confirming all dimensions and correlating them at the job site, for all construction means, methods and techniques, and for coordination of construction work of all trades, including coordination of all shop drawings.

Stantec

☐ REVIEWED
☑ REVIEWED, AS NOTED
☐ REVISE AND RESUBMIT
☐ NOT REVIEWED

DATE 2019-02-08

BY TFlender

Review of this submission is for compliance with general intent of the contract. This review does
omissions in the submission or the responsibility of meeting all requirements of the contract doc
Supplier or Manufacturer shall be at their sole risk. QUANTITIES AND DETAIL DIMENSIONS ARE THE SUB-CONTRACTORS OR SUPPLIERS RESPONSIBILITY. VERIFY DATA
WITH FIELD DIMENSIONS.

SUBMITTAL TRACKING No.: **STC-018 R1** 2019-01-30

sheet B902
reviewed only for
architecture



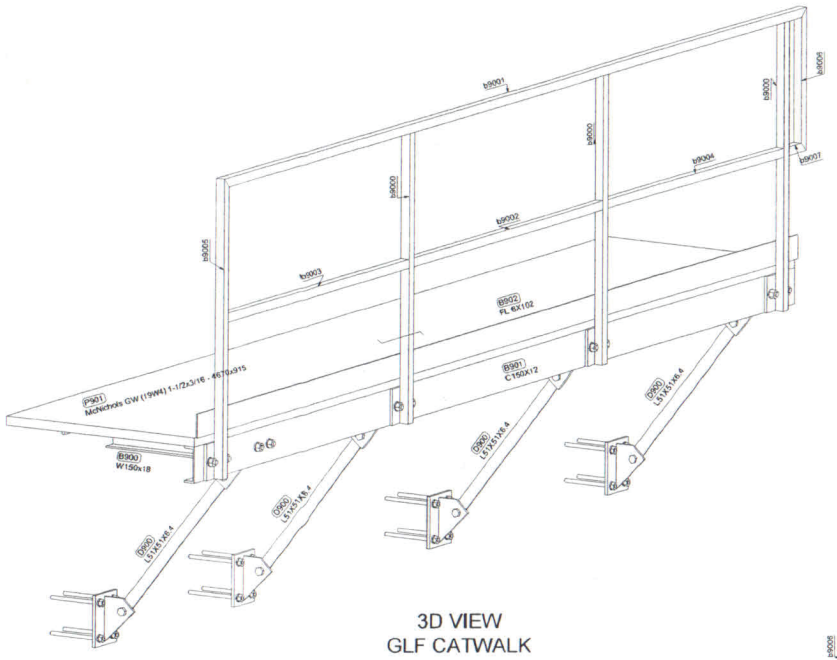

3D VIEW
GLF CATWALK

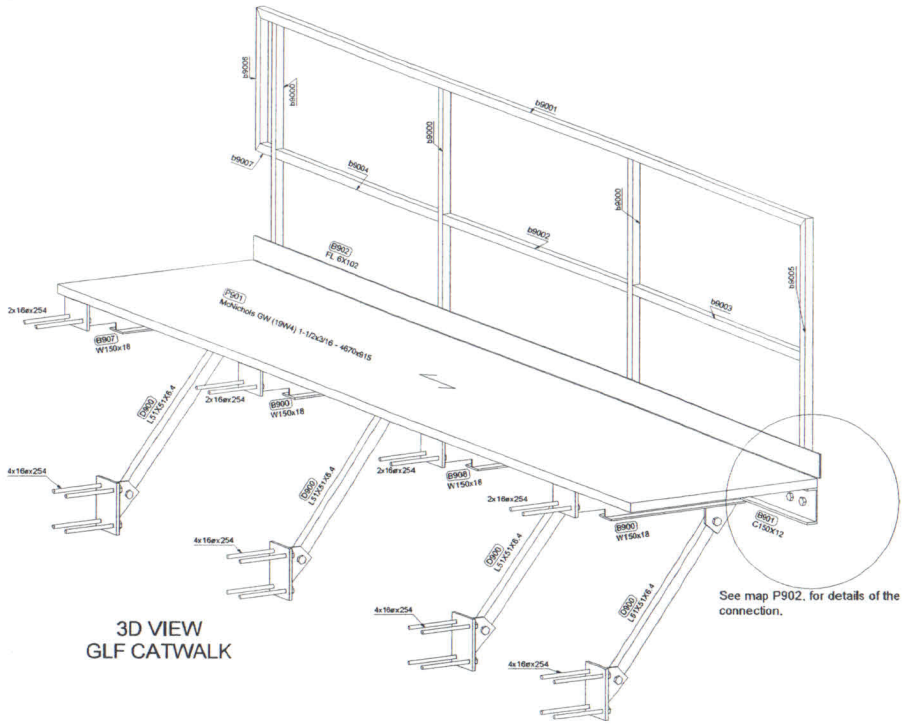

3D VIEW
GLF CATWALK

See map P902, for details of the connection.

PROJET :
IQALUIT
WASTEWATER TREATMENT
PLANT
GLFCATWALK

-ALL STEEL IS GALVANIZED

REGISTERED PROFESSIONAL ENGINEER
NT/NU

ALL WELDS COMPLY
WITH THE CWB

Rev.	Date	Par	Description
REV-A	2019-01-14	Julie Lajoie	Révision (REV-A)

STRUCTURES M.H. inc.
ENTREPRENEUR GÉNÉRAL
3,670 Av. de la Technologie, Alma QC J8Y 0B8
Téléphone : 418 480-2,36 Télécopieur : 418 668-5235
structuresmh@gmail.com
RBQ:1612-0215-01

Date : 2018-11-27

INGÉNIEUR : Jean Trudeau

Client :
KUDUK CONTS.

Projet :
IQALUIT WWTP - GLF CATWALK

No. Projet :
MH.2018.0640_ST

Détaillé par :
Julie Lajoie

TITRE :
VIEW 3D GLF CATWALK

Soudure : EXOSELECT	No. Dessin :
Trou : 13 METwin	ST-930
Axes : 3000,3500,3000-CL,CA1001,G40,21	Séquence :
Peinture : Aucun,Galvanisé,Peint	REV-A

Marque	Quantité	Description	Longueur	Nuance	Finition	Poids	Poids total
B900	2	Poutre					
b1/1	2	W150x18	887.7	350W	Galvanisé	35.226	70.451
p1/2	2	PLT12.7x110x178	178.0	G40.21	Galvanisé	4.303	8.607
p1/3	2	PLT12.7x124.2x159.3	159.3	G40.21	Galvanisé	2.680	5.359
p1/6	2	PLT9.5x76.2x152.4	152.4	G40.21	Galvanisé	1.914	3.829
	8					44.123	88.246
	8						88.246

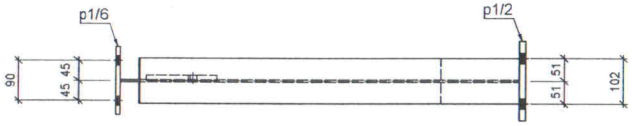

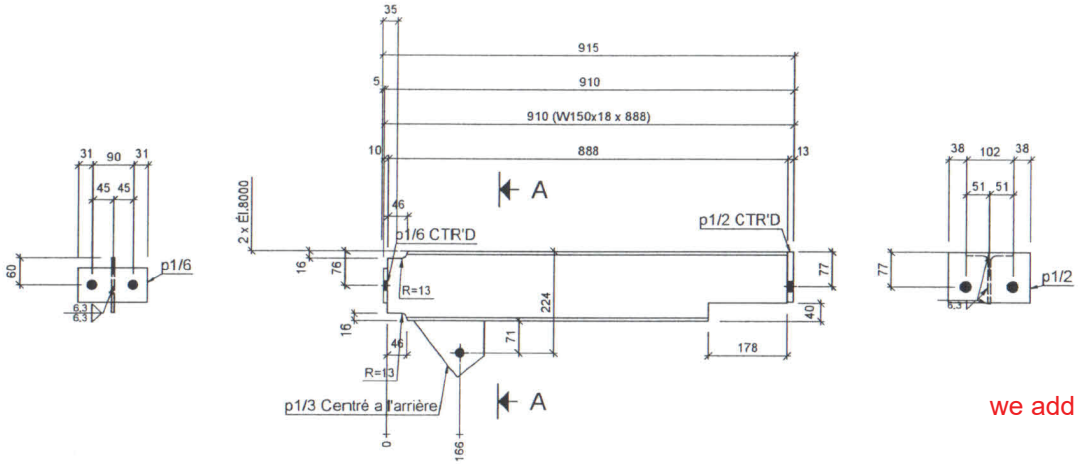

we add a noch because of the existing wall (see picture page 2)

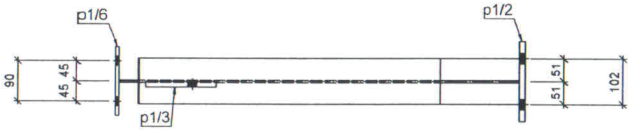

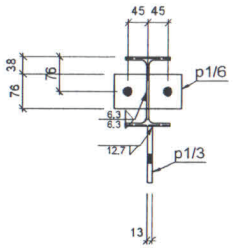

Section A - A

2 - B900 W150x18

d=153 b=102 t=7 w=6 k=19

Grid reference

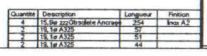



Rev.	Date	Par	Description
REV-A	2019-01-14	Julie Lajoie	Révision (REV-A).

Projet : IQALUIT WWTP - GLF CATWALK

No. Projet : MH.2018.0840_ST

Statut : Révisé	Commentaire :	
Détaillé par : Julie Lajoie	Trou : 13/16"Ø u/n	Client : KUDLIK CONTS.
Vérifié par: Jean Trudeau	Soudure : E70XXELECT	No. Dessin : B900
STRUCTURES M.H. inc. ENTREPRENEUR GÉNÉRAL	Acier : 350W	
	Peinture: Galvanisé	Sequence : REV-A
	Date : 2018-11-27	

Marque	Quantité	Description	Longueur	Nuance	Finition	Poids	Poids total
B901	1	Poutre					
b1/3	1	C150X12	4670.0	300W	Peint	123.547	123.547
	1					123.547	123.547
	1						123.547

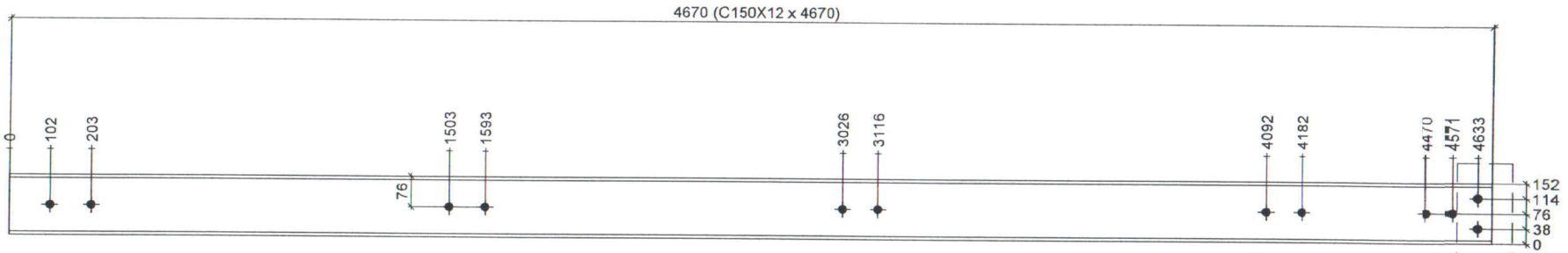

1 - B901 C150X12

d=152 b=48 t=9 w=5 k=18

Grid reference

Connection that will be adjusted at the job site to connect to the GL 5 as requested in the construction plan on page S202.
See map P902, for details of the connection

REGISTERED PROFESSIONAL ENGINEER
NT/NU
16/09/19

Quantité	Description	Longueur	Finition
2	19.1x A325	61	

Rev.	Date	Par	Description
REV-A	2019-01-14	Julie Lajoie	Revision (REV-A).

Projet : IQALUIT WWTP - GF CATWALK

No. Projet : MH.2018.0840_ST

Statut : Révisé	Commentaire :	
Détaillé par : Julie Lajoie	Trou : 13/15"Su/n	Client : KUDLIK CONTS.
Vérifié par: Jean Trudeau	Soudure : E70XXELE	No. Dessin : B901
STRUCTURES M.H. inc. ENTREPRENEUR GÉNÉRAL	Acier : 300W	
	Peinture: Peint	Sequence : REV-A
	Date : 2018-11-27	



Marque	Quantité	Description	Longueur	Nuance	Finition	Poids	Poids total
B902	1						
b1/4	1	FL 6X102	4670.0	300W		52.142	52.142
b9001	1	HSS 38.1X38.1X3.18	4539.0	350W-CL_C	Galvanisé	33.023	33.023
b9002	1	HSS 38.1X38.1X3.18	1484.9	350W-CL_C	Galvanisé	10.803	10.803
b9003	1	HSS 38.1X38.1X3.18	1410.5	350W-CL_C	Galvanisé	10.265	10.265
b9004	1	HSS 38.1X38.1X3.18	1357.9	350W-CL_C	Galvanisé	9.879	9.879
b9005	1	HSS 38.1X38.1X3.18	1260.0	350W-CL_C	Galvanisé	9.167	9.167
b9000	3	HSS 38.1X38.1X3.18	1221.9	350W-CL_C	Galvanisé	8.890	26.669
p1/7	1	PLT12.7x152x152.4	152.4	G40.21	Galvanisé	5.091	5.091
p1/8	1	PLT12.7x152x152.4	152.4	G40.21	Galvanisé	5.091	5.091
p1/5	2	PLT12.7x152x152.4	152.4	G40.21	Galvanisé	5.091	10.183
b9006	1	HSS 38.1X38.1X3.18	608.1	350W-CL_C	Galvanisé	4.424	4.424
b9007	1	HSS 38.1X38.1X3.18	132.9	350W-CL_C	Galvanisé	0.957	0.957
	15					177.704	177.704
	15						177.704

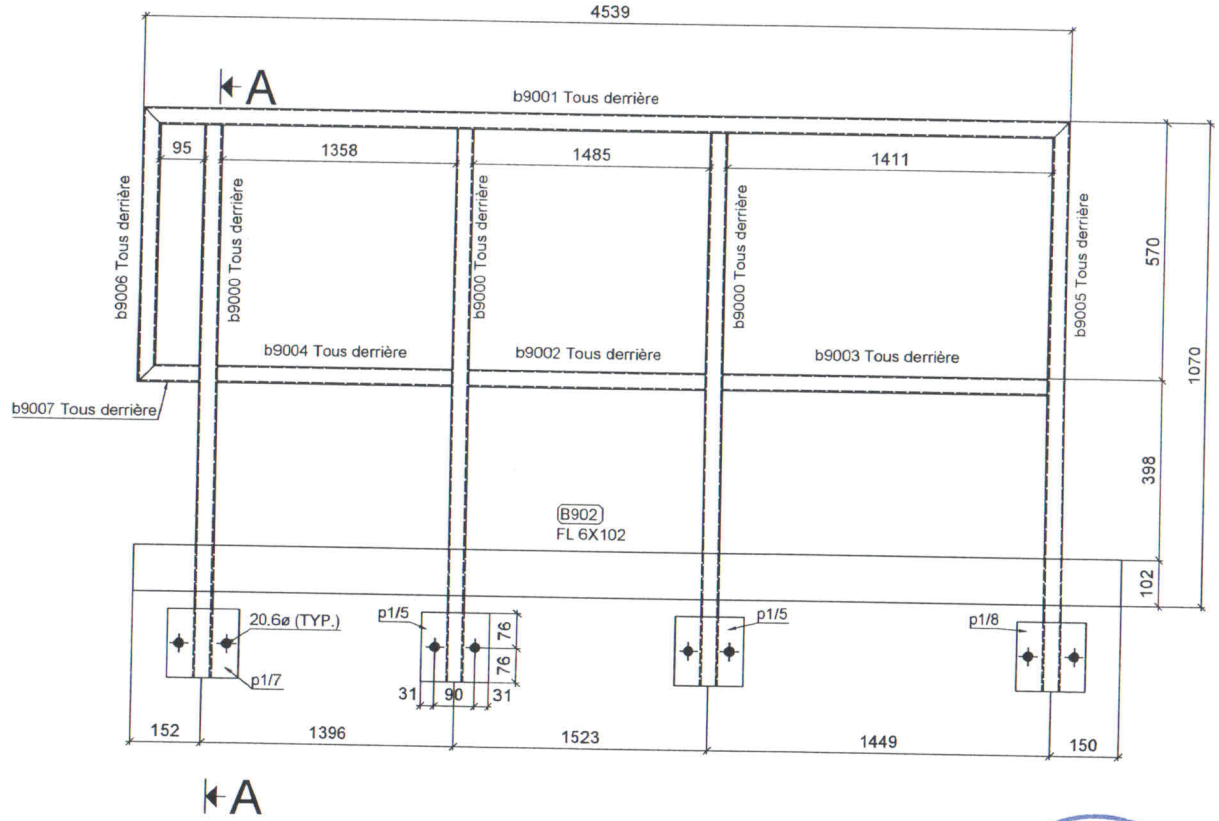

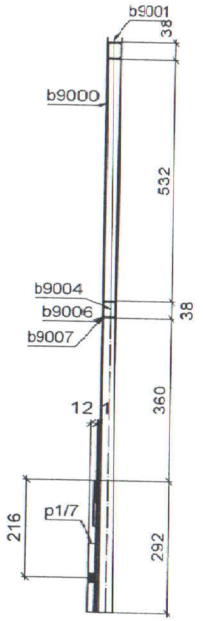

Section A - A

1 - B902 FL 6X102

d=101.6 | b=6.3 | t= | w=6.3 | k=

Grid reference

REGISTERED PROFESSIONAL ENGINEER
NT/NU

Rev.	Date	Par	Description
REV-A	2019-01-14	Julie Lajoie	Révision (REV-A).

Projet : IQALUIT WWTP - GLF CATWALK

No. Projet : MH.2018.0840_ST

Statut : Révisé	Commentaire :	
Détaillé par : Julie Lajoie	Trou : 13/16"Ø u/n	Client : KUDLIK CONTS.
Vérifié par: Jean Trudeau	Soudure : E70XXELECT	No. Dessin : B902
STRUCTURES M.H. inc ENTREPRENEUR GÉNÉRAL	Acier : 300W	
	Peinture: Aucun	Sequence : REV-A
	Date : 2018-11-27	

Marque	Quantité	Description	Longueur	Nuance	Finition	Poids	Poids total
B907	1	Poutre					
b1/1	1	W150x18	887.7	350W	Galvanisé	35.226	35.226
p1/2	1	PLT12.7x110x178	178.0	G40.21	Galvanisé	4.303	4.303
p1/3	1	PLT12.7x124.2x159.3	159.3	G40.21	Galvanisé	2.680	2.680
p1/10	1	PLT9.5x76.2x177.2	177.2	G40.21	Galvanisé	2.226	2.226
	4					44.435	44.435
	4						44.435

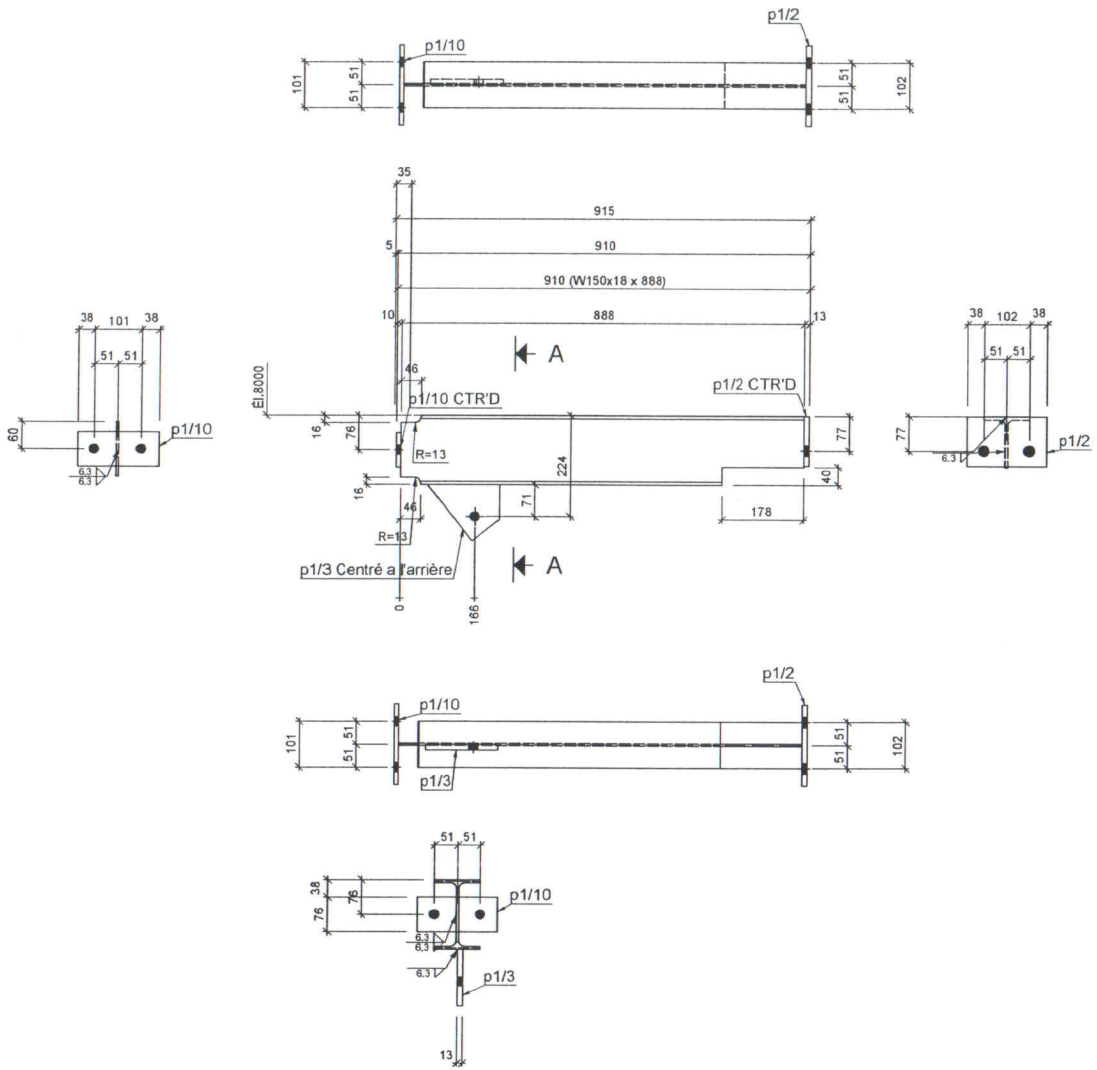

Section A - A

1 - B907 W150x18

d=153 b=102 t=7 w=6 k=19

Grid reference

Quantité	Description	Longueur	Finition
2	15.9x 22xDroite/Entraxe	254	Inox A2
1	19.1x A325	57	
1	19.1x A325	51	
3	19.1x A325	44	

REGISTERED PROFESSIONAL ENGINEER
NT/NU

Rev.	Date	Par	Description
REV-A	2019-01-14	Julie Lajoie	Révision (REV-A).

Projet : IQALUIT WWTP - GLF CATWALK

No. Projet : MH.2018.0840_ST

Statut : Révisé	Commentaire :	
Détaillé par : Julie Lajoie	Trou : 13/16"Ø u/n	Client : KUDLIK CONTS.
Vérifié par: Jean Trudeau	Soudure : E70XXELECT	No. Dessin : B907
STRUCTURES M.H. inc. ENTREPRENEUR GÉNÉRAL	Acier : 350W	
	Peinture: Galvanisé	Sequence : REV-A
	Date : 2018-11-27	

Marque	Quantité	Description	Longueur	Nuance	Finition	Poids	Poids total
B908	1	Poutre					
b1/1	1	W150x18	887.7	350W	Galvanisé	35.226	35.226
p1/2	1	PLT12.7x110x178	178.0	G40.21	Galvanisé	4.303	4.303
p1/3	1	PLT12.7x124.2x159.3	159.3	G40.21	Galvanisé	2.680	2.680
p1/9	1	PLT9.5x76.2x152.4	152.4	G40.21	Galvanisé	1.914	1.914
	4					44.123	44.123
	4						44.123

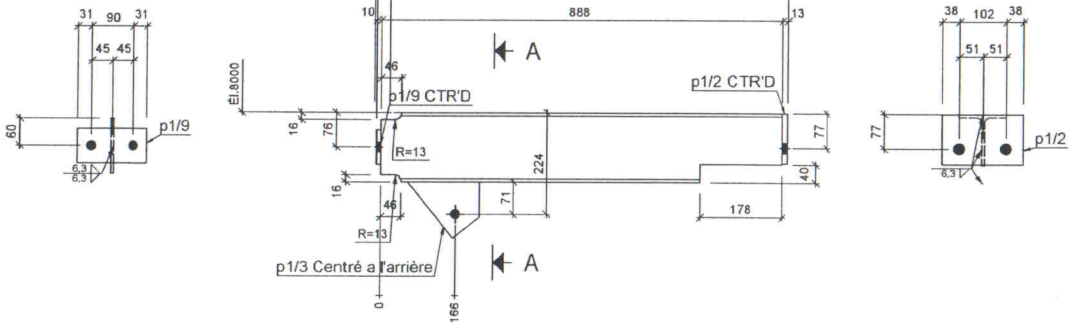





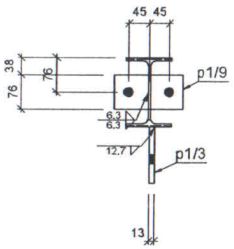

Section A - A

1 - B908 W150x18

d=153 b=102 t=7 w=6 k=19

Grid reference

REGISTERED PROFESSIONAL ENGINEER
NT/NU

Rev.	Date	Par	Description
REV-A	2019-01-14	Julie Lajoie	Révision (REV-A).

Projet : IQALUIT WWTP - GLF CATWALK

No. Projet : MH.2018.0840_ST

Statut : Révisé	Commentaire :	
Détaillé par : Julie Lajoie	Trou : 13/16"Ø u/n	Client : KUDLIK CONTS.
Vérifié par: Jean Trudeau	Soudure : E70XXELECT	No. Dessin : B908
STRUCTURES M.H. inc. ENTREPRENEUR GÉNÉRAL	Acier : 350W	
	Peinture: Galvanisé	Sequence : REV-A
	Date : 2018-11-27	

Marque	Quantité	Description	Longueur	Nuance	Finition	Poids	Poids total
D900	4	Contreventement					
d1/1	4	L51X51X6.4	850.6	300W	Galvanisé	8.814	35.256
	4					8.814	35.256
	4						35.256

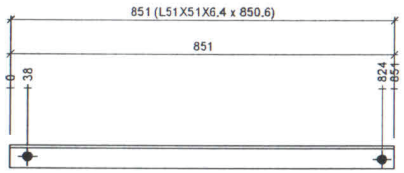

4 - D900 L51X51X6.4
Grid reference

REGISTERED PROFESSIONAL ENGINEER
NT/NU

Rev.	Date	Par	Description
REV-A	2019-01-14	Julie Lajoie	Révision (REV-A).

Projet : IQALUIT WWTP - GLF CATWALK
No. Projet : MH.2018.0840_ST

Statut : Révisé	Commentaire :	
Détaillé par : Julie Lajoie	Trou : 13/16"Ø u/n	Client : KUDLIK CONTS.
Vérifié par: Jean Trudeau	Soudure : E70XXELECT	No. Dessin : D900
STRUCTURES M.H. inc. ENTREPRENEUR GÉNÉRAL	Acier : 300W	
	Peinture: Galvanisé	Sequence : REV-A
	Date : 2018-11-27	

Quantité	Description	Longueur	Finition

Marque	Quantité	Description	Longueur	Nuance	Finition	Poids	Poids total
P900	4	Platine d'extrémité					
p1/4	4	PLT12.7x163.7x219.2	219.2	G40.21	Galvanisé	7.888	31.552
p1/1	4	PLT10x134x193.2	193.2	G40.21	Galvanisé	2.623	10.490
	8					10.511	42.042
	8						42.042

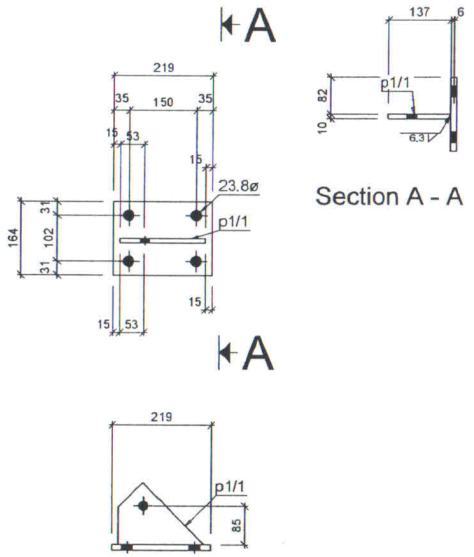

4 - P900 PLT12.7x163.7x219.2

REGISTERED PROFESSIONAL ENGINEER
NT/NU
16/05/19

Rev.	Date	Par	Description
REV-A	2019-01-14	Julie Lajoie	Révision (REV-A).

Projet : IQALUIT WWTP - GLF CATWALK

No. Projet : MH.2018.0840_ST

Statut : Révisé	Commentaire :	
Détaillé par : Julie Lajoie	Trou : 13/16"Ø u/n	Client : KUDLIK CONTS.
Vérifié par: Jean Trudeau	Soudure : E70XXELECT	No. Dessin : P900
STRUCTURES M.H. inc. ENTREPRENEUR GÉNÉRAL	Acier : G40.21	
	Peinture: Galvanisé	Sequence : REV-A
	Date : 2018-11-27	

Quantité	Description	Longueur	Finition
16	15.9ø zzzObsolète Ancrage	254	Inox A2
4	19.1ø A325	44	

Marque	Quantité	Description	Longueur	Nuance	Finition	Poids	Poids total
P901	1	Caillebotis					
p1/11	1	McNichols GW (19W4) 1-1/2x3/16 - 4670x915A-1001			Galvanisé	496.700	496.700
	1					496.700	496.700
	1						496.700

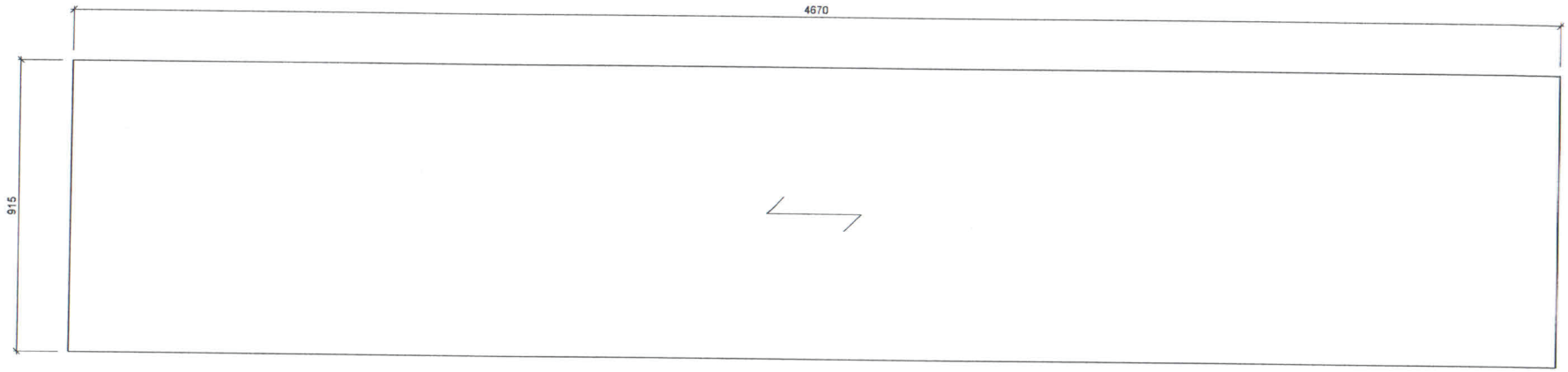

1 - P901 McNichols GW (19W4) 1-1/2x3/16 - 4670x915

REGISTERED PROFESSIONAL ENGINEER
NT/NU

Rev.	Date	Par	Description
REV-A	2019-01-14	Julie Lajoie	Révision (REV-A).

Projet : IQALUIT WWTP - GLF CATWALK
No. Projet : MH.2018.0840_ST

Statut : Révisé	Commentaire :	
Détaillé par : Julie Lajoie	Trou : 13/16"Ø u/n	Client : KUDLIK CONTS.
Vérifié par: Jean Trudeau	Soudure : E70XXELECT	No. Dessin : P901
STRUCTURES M.H. inc. ENTREPRENEUR GÉNÉRAL	Acier : A-1001	
	Peinture: Galvanisé	Sequence : REV-A
	Date : 2018-11-27	

Quantité | Description | Longueur | Finition

Marque	Quantité	Description	Longueur	Nuance	Finition	Poids	Poids total
P902	1						
p9001	1	PLT12.7x125x150	150.0	G40.21		4.121	4.121
p9000	1	PLT12.7x102.4x125	125.0	G40.21	Galvanisé	2.813	2.813
	2					6.934	6.934
	2						6.934

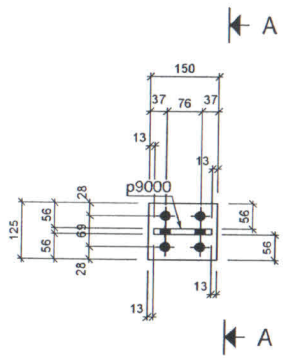

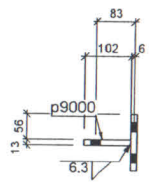

Section A - A

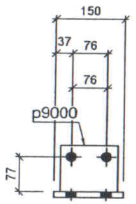

1 - P902 PLT12.7x125x150

REGISTERED PROFESSIONAL ENGINEER
J. TRUDEAU
LICENSEE
16/08/19
NT/NU

Rev.	Date	Par	Description

Projet : IQALUIT WWTP - GLF CATWALK

No. Projet : MH.2018.0840_ST

Statut : Révisé	Commentaire :	
Détaillé par : Julie Lajoie	Trou : 13/16"Ø u/n	Client: KUDLIK CONTS.
Vérifié par: Jean Trudeau	Soudure : E70XXELECT	No. Dessin : P902
STRUCTURES M.H. inc. ENTREPRENEUR GÉNÉRAL	Acier : G40.21	
	Peinture: Aucun	Sequence : 0
	Date : 2019-01-14	

Quantité	Description	Longueur	Finition
2	15.1e A325	51	

SUBMITTALS IDENTIFICATION SHEET

PROJECT: Wastewater Treatment Plant Upgrade
Iqaluit, Nunavut

NUNAMI
STANTEC LIMITED

1088C Noble House
Iqaluit NU
www.stantec.com

CONTRACTOR: Kudlik Construction Ltd, Project 2018-062

Telephone: 867-979-1166

E-mail: srousseau@kudlik.biz

SUBCONTRACTOR: Structure MH

Person responsible: Moise Harvey

Telephone: (418)487-8772 E-mail: structures.mh@gmail.com

PRODUCT SUBMITTED:

☑ As Specified

☐ Alternate

SUPPLIER or MANUFACTURER:

Person responsible:

Telephone: E-mail:

DESCRIPTION OF SUBMITTAL:

# of pages:

Reference to drawings:

Reference to specs:

Division: 05 Section: 05 12 23 - 05 21 00

REMARKS:

CCN-011

REVIEW AND COMMENTS (for use by Consultants):

STANTEC PROJECT #: 110126045 SUBMITTAL # STC-023

This review by Stantec is for general conformance with the design concept of Stantec's design of the:

☐ Architectural ☐ Electrical
☑ Structural ☐ Other
☐ Mechanical

component(s) only and does not mean that Stantec has verified or approves the shop drawing(s). The Contractor remains solely responsible for the shop drawing(s) and this review by Stantec does not relieve the Contractor of the Contractor's responsibility for errors or omissions in the shop drawing(s) or for meeting all requirements of the contract documents. This review does not mean that Stantec approves the detailed design inherent in the shop drawing, responsibility for which shall remain with the Contractor submitting same, nor does this review mean that Stantec accepts any deviation of the shop drawing(s) from the contract documents. The Contractor is responsible for confirming all dimensions and correlating them at the job site, for all construction means, methods and techniques, and for coordination of construction work of all trades, including coordination of all shop drawings.

Stantec

☐ REVIEWED
☑ REVIEWED, AS NOTED
☐ REVISE AND RESUBMIT
☐ NOT REVIEWED

DATE 2019-03-22

BY pclyne

STANTEC PROJECT #: 110126045 SUBMITTAL # STC-023 CCN-11

This review by Stantec is for general conformance with the design concept of Stantec's design of the:

☑ Architectural ☐ Electrical
☐ Structural ☐ Other
☐ Mechanical

component(s) only and does not mean that Stantec has verified or approves the shop drawing(s). The Contractor remains solely responsible for the shop drawing(s) and this review by Stantec does not relieve the Contractor of the Contractor's responsibility for errors or omissions in the shop drawing(s) or for meeting all requirements of the contract documents. This review does not mean that Stantec approves the detailed design inherent in the shop drawing, responsibility for which shall remain with the Contractor submitting same, nor does this review mean that Stantec accepts any deviation of the shop drawing(s) from the contract documents. The Contractor is responsible for confirming all dimensions and correlating them at the job site, for all construction means, methods and techniques, and for coordination of construction work of all trades, including coordination of all shop drawings.

Stantec

☐ REVIEWED
☑ REVIEWED, AS NOTED
☐ REVISE AND RESUBMIT
☐ NOT REVIEWED

DATE 2019-03-27

BY TFlender

Review of this submission is for compliance with general intent of the contract. This review does not relieve the Sub-Contractor, Supplier or Manufacturer of responsibility for error or omissions in the submission or the responsibility of meeting all requirements of the contract documents. Supplier or Manufacturer shall be at their sole risk. QUANTITIES AND D WITH FIELD DIMENSIONS.

Note:
Architectural review pertains only drawing 0-0, 1-1 and M100

SUBMITTAL TRACKING No.: **STC-023** 2019-02-20

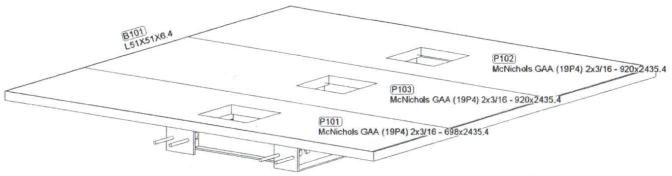

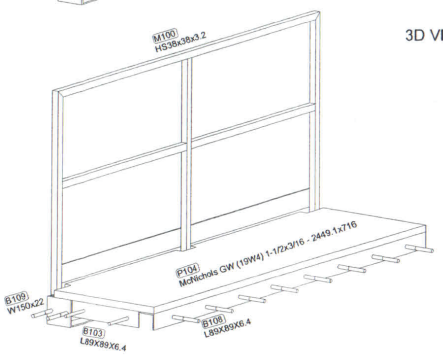

3D VIEW UPPER FLOOR WET WELL RENOVATION
AND WET WELL MID-PLATFORM

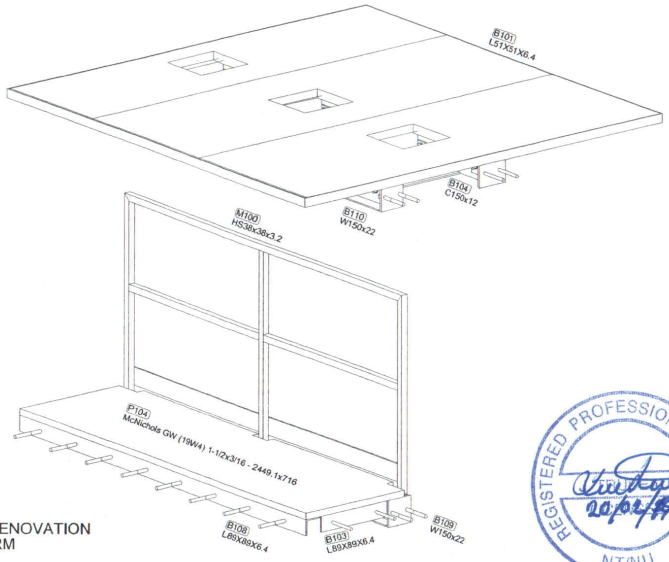

3D VIEW UPPER FLOOR WET WELL RENOVATION
AND WET WELL MID-PLATFORM

REGISTERED PROFESSIONAL ENGINEER
NT/NU

PROJET : IQALUIT
WASREWATER TREATMENT
PLANT UPGRADE

DIRECTIVE CNN-11

ALL WELDING
PLAN AND WHAT
WERE MADE
SOUS ALL COMPLIES
CWB

Rev.	Date	Par	Description

STRUCTURES M.H. inc.
ENTREPRENEUR GÉNÉRAL
1370 Av. de la Technologie, Rimo QC J0B
Téléphone : 418-460-3166 Télécopieur : 418 649-9235
structures.mh@ymail.com
RBQ : 5612-6233-01

Date : 2019-02-20

INGÉNIEUR : Jean Trudeau

Client :
KUDLIK CONSTRUCTION LTD

Projet :
WASREWATER TREATMENT PLANT UPGRADE

No. Projet :
MH.2018.0839-NCC-11R

Dessiné par :
Moise Harvey

TITRE :
VUE 3D
CCN-11 WET WELL MID-PLATFORM
AND WET WELL NEW BEAMS

Soudure :	E70XXELEC
Tuyau :	13x1/4"W sch.
Acier :	300W,350WA-180,G40.21
Peinture :	Aucun,Galvanisé

No. Dessin : 0-0

Séquence : 0

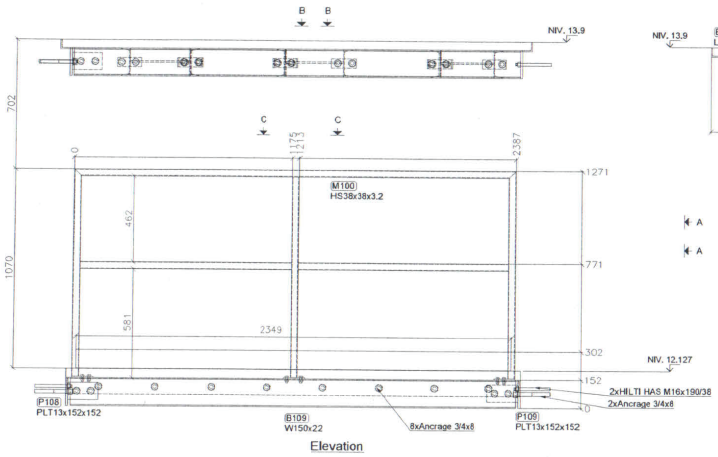

Elevation

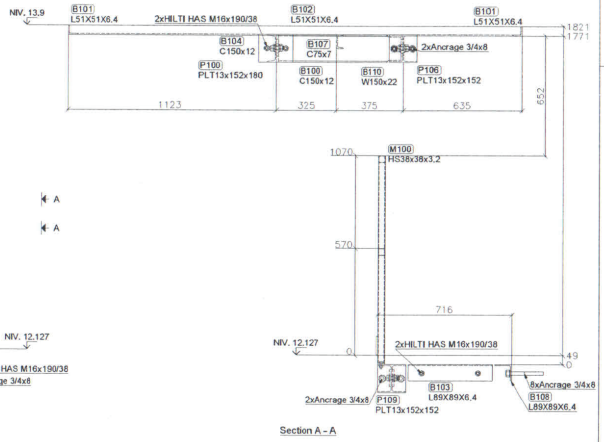

Section A - A



Section B - B

1/SKS004 CALLS UP L51X51X6.4 IN THESE AREAS. THE PURPOSE IS TO SUPPRT THE EDGE OF GRATING.

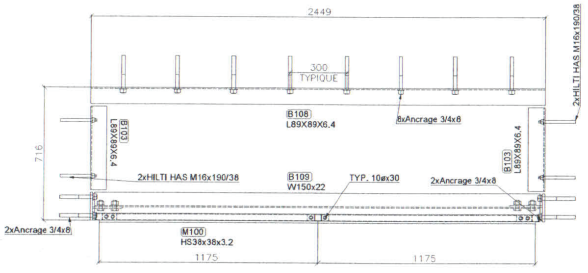

Section C - C

REGISTERED PROFESSIONAL ENGINEER
NT/NU

PROJET : IQALUIT
WASREWATER TREATMENT
PLANT UPGRADE

DIRECTIVE CIIN-11

ALL WELDING PLAN AND WHAT WERE MADE SOUS ALL COMPLIES CWB

Rev.	Date	Par	Description

STRUCTURES M.H. inc
ENTREPRENEUR GÉNÉRAL

Date : 2019-02-20

INGÉNIEUR : Jean Trudeau

Client :
KUDLIK CONSTRUCTION LTD

Projet :
WASREWATER TREATMENT PLANT UPGRADE

No. Projet :
MH.2018.0839-IICC11R

Détaillé par :
Moise Harvey

TITRE :
VUE DETAIL
CCN-11 WET WELL MID-PLATFORM AND WET WELL NEW BEAMS

1-1

Marque	Quantité	Description	Longueur	Nuance	Finition	Poids	Poids total
B100	6	Poutre					
b1000	6	C150x12	677.1	300W	Galvanisé	17.913	107.478
p1000	12	PLT10x50x129.2	129.2	G40.21		1.118	13.416
	18					20.149	120.894
	18						120.894

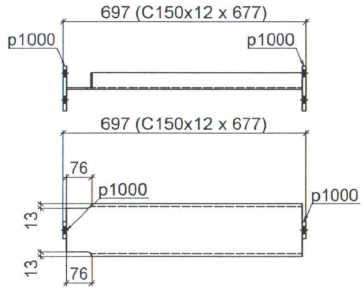

6 - B100 C150x12
Grid reference



ALL WELDING PLAN AND WHAT WERE MADE SOUS ALL COMPLIES CWB

Rev.	Date	Par	Description

Projet : CCN-011 WET WELL NEW BEAMS
No. Projet : MH.2018.0839-NCC-11R

Statut :	Commentaire:	
Détaillé par : Moise Harvey	Trou : 13/1fØ u/n	Client UDLIK CONST.
Vérifié par: Jean Trudeau	Soudure : E7XXELECT	No. Dessin : B100
	Acier : 300W	
	Peinture: Galvnisé	Sequence : 0
	Date : 201902-20	

Marque	Quantité	Description	Longueur	Nuance	Finition	Poids	Poids total



2 - B101 L51X51X6.4
Grid reference

REGISTERED PROFESSIONAL ENGINEER
NT/NU

CWB
certificationcwb
CSA W47.1

ALL WELDING
PLAN AND WHAT
WERE MADE
SOUS ALL COMPLIES
CWB

Rev.	Date	Par	Description

Projet : CCN-011 WET WELL NEW BEAMS No. Projet : MH.2018.0839-NCC-11R		
Statut :	Commentaire :	
Détaillé par : Moise Harvey	Trou : 13/16"Ø u/n	Client:UDLIK CONST.
Vérifié par: Jean Trudeau	Soudure : E70XXELECT	No. Dessin B101
STRUCTURES M.H. inc. ENTREPRENEUR GÉNÉRAL	Acier : 300W	
	Peinture: Galvanisé	Sequence : 0
	Date : 2019-02-20	

Marque	Quantité	Description	Longueur	Nuance	Finition	Poids	Poids total



2 - B102 L51X51X6.4
Grid reference

REGISTERED PROFESSIONAL ENGINEER
NT/NU

ALL WELDING
PLAN AND WHAT
WERE MADE
SOUS ALL COMPLIES
CWB

Rev.	Date	Par	Description

Projet : CCN-011 WET WELL NEW BEAMS
No. Projet : MH.2018.0839-NCC-11R

Statut :	Commentaire :	
Détaillé par : Moise Harvey	Trou : 13/16"Ø u/n	Client: UDLIK CONST.
Vérifié par: Jean Trudeau	Soudure : E70XXELECT	No. Dessin : B102
STRUCTURES M.H. Inc. ENTREPRENEUR GÉNÉRAL	Acier : 300W	
	Peinture: Galvanisé	Sequence : 0
	Date : 2019-02-20	

Quantité | Description | Longueur | Finition

Marque	Quantité	Description	Longueur	Nuance	Finition	Poids	Poids total
B103	2						
b1001	2	L89X89X6.4	451.1	300W	Galvanisé	8.503	17.006
	2					8.503	17.006
	2						17.006

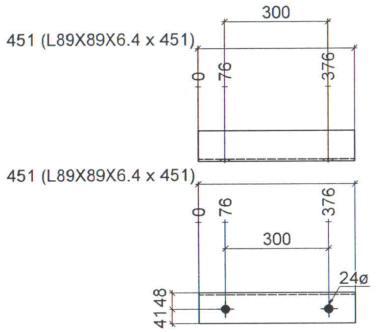

2 - B103 L89X89X6.4
Grid reference

REGISTERED PROFESSIONAL ENGINEER
NT/NU

CWB certificationcwb CSA W47.1

ALL WELDING PLAN AND WHAT WERE MADE SOUS ALL COMPLIES CWB

Rev.	Date	Par	Description

Projet : CCN-011 WET WELL NEW BEAMS
No. Projet : MH.2018.0839-NCC-11R

Statut :	Commentaire :	
Détaillé par : Moise Harvey	Trou : 13/16"Ø u/n	Client:DLK CONST.
Vérifié par: Jean Trudeau	Soudure : E70XXELECT	No. Dessin : B103
STRUCTURES M.H. Inc. ENTREPRENEUR GÉNÉRAL	Acier : 300W	
	Peinture: Galvanisé	Sequence : 0
	Date : 2019-02-20	

Marque	Quantité	Description	Longueur	Nuance	Finition	Poid	Poids total
B104	1	Poutre					
b1002	1	C150x12	2415.0	300W	Galvanisé	63.891	63.891
	1					63.891	63.891
	1						63.891

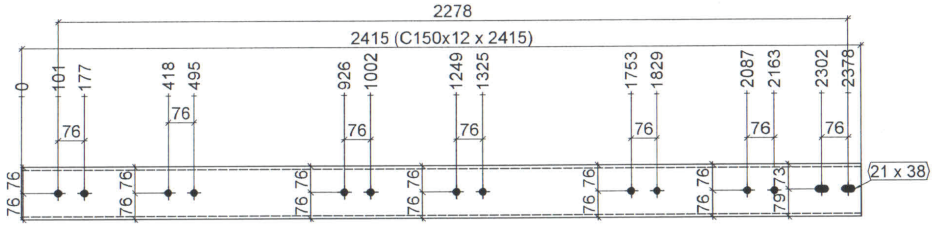

1 - B104 C150x12
Grid reference

REGISTERED PROFESSIONAL ENGINEER NT/NU

CWB certificationcwb CSA W47.1

ALL WELDING PLAN AID WHAT WERE MADE SOUS ALL COMPLIES CWB

Rev.	Date	Par	Description

Projet : CCN-011 WET WELL NEW BEAMS
No. Projet : MH.2018.0839-NCC-11R

Statut :	Commentaire :	
Détaillé par : Moise Harvey	Trou : 13/15*Ø/n	Client:UDLIKCONST.
Vérifié par: Jean Trudeau	Soudure : E70XELECT	No. Dessin : B104
STRUCTURES M.H. inc. ENTREPRENEUR GÉNÉRAL	Acier : 300W	
	Peinture: Galvani	Sequence : 0
	Date : 2019-020	

Marque	Quantité	Description	Longueur	Nuance	Finition	Poids	Poids total
B105	1						
b1003	1	C75x7	321.2	300W	Galvanisé	4.957	4.957
	1					4.957	4.957
	1						4.957

321 (C75x7 x 321)

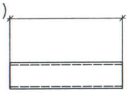

1 - B105 C75x7
Grid reference

REGISTERED PROFESSIONAL ENGINEER
NT/NU

CWB certificationcwb CSA W47.1

ALL WELDING
PLAN AND WHAT
WERE MADE
SOUS ALL COMPLIES
CWB

Rev.	Date	Par	Description

Projet : CCN-011 WET WELL NEW BEAMS
No. Projet : MH.2018.0839-NCC-11R

Statut :	Commentaire :	
Détaillé par : Moise Harvey	Trou : 13/16"Ø u/n	Client: UDLIK CONST.
Vérifié par: Jean Trudeau	Soudure : E70XXELECT	No. Dessin : B105
STRUCTURES M.H. inc. ENTREPRENEUR GÉNÉRAL	Acier : 300W	
	Peinture: Galvanisé	Sequence : 0
	Date : 2019-02-20	

Quantité	Description	Longueur	Finition

Marque	Quantité	Description	Longueur	Nuance	Finition	Poids	Poids total
B106	1						
b1004	1	C75x7	303.9	300W	Galvanisé	4.690	4.690
	1					4.690	4.690
	1						4.690

304 (C75x7 x 304)

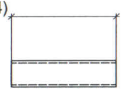

1 - B106 C75x7
Grid reference

REGISTERED PROFESSIONAL ENGINEER
NT/NU
20/02/20

CWB
certificationcwb
CSA W47.1

ALL WELDING
PLAN AND WHAT
WERE MADE
SOUS ALL COMPLIES
CWB

Rev.	Date	Par	Description

Projet : CCN-011 WET WELL NEW BEAMS
No. Projet : MH.2018.0839-NCC-11R

Statut :	Commentaire :	
Détaillé par : Moise Harvey	Trou : 13/16"Ø u/n	Client: DLK CONST.
Vérifié par: Jean Trudeau	Soudure : E70XXELECT	No. Dessin : B106
STRUCTURES M.H. inc. ENTREPRENEUR GÉNÉRAL	Acier : 300W	
	Peinture: Galvanisé	Sequence : 0
	Date : 2019-02-20	

Marque	Quantité	Description	Longueur	Nuance	Finition	Poids	Poids total
B107	1						
b1005	1	C75x7	298.6	300W	Galvanisé	4.608	4.608
	1					4.608	4.608
	1						4.608

299 (C75x7 x 299)

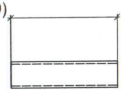

1 - B107 C75x7
Grid reference

REGISTERED PROFESSIONAL ENGINEER
NT/NU
20/03/29

CWB
certificationcwb
CSA W47.1

ALL WELDING
PLAN AND WHAT
WERE MADE
SOUS ALL COMPLIES
CWB

Rev.	Date	Par	Description

Projet : CCN-011 WET WELL NEW BEAMS No. Projet : MH.2018.0839-NCC-11R		
Statut :	Commentaire :	
Détaillé par : Moise Harvey	Trou : 13/16"Ø u/n	Client:DLK CONST.
Vérifié par: Jean Trudeau	Soudure : E70XXELECT	No. Dessin : B107
STRUCTURES M.H. inc. ENTREPRENEUR GÉNÉRAL	Acier : 300W	
	Peinture: Galvanisé	Séquence 0
	Date : 2019-02-20	

Marque	Quantité	Description	Longueur	Nuance	Finition	Poids	Poids total
B108	1						
b1006	1	L89X89X6.4	2449.1	300W	Galvanisé	46.164	46.164
	1					46.164	46.164
	1						46.164

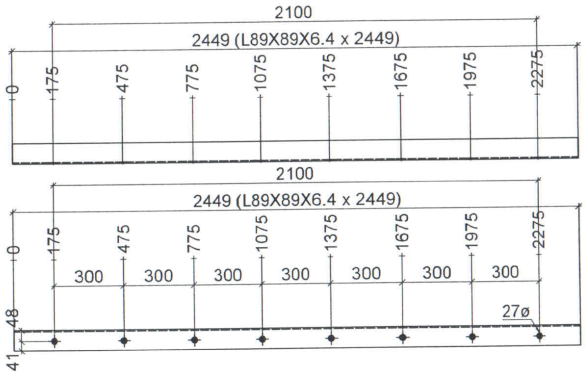

1 - B108 L89X89X6.4
Grid reference

REGISTERED PROFESSIONAL ENGINEER
NT/NU
29/02/19

CWB certificationcwb CSA W47.1

ALL WELDING PLAN AND WHAT WERE MADE SOUS ALL COMPLIES CWB

Rev.	Date	Par	Description

Projet : CCN-011 WET WELL NEW BEAMS
No. Projet : MH.2018.0839-NCC-11R

Statut :	Commentaire :	
Détaillé par : Moise Harvey	Trou : 13/16"Ø u/n	Client:DLK CONST.
Vérifié par: Jean Trudeau	Soudure : E70XXELECT	No. Dessin : B108
STRUCTURES M.H. inc. ENTREPRENEUR GÉNÉRAL	Acier : 300W	
	Peinture: Galvanisé	Sequence 0
	Date : 2019-02-20	

Marque	Quantité	Description	Longueur	Nuance	Finition	Poids	Poids total
B109	1	Poutre					
b1008	1	W150x22	2399.1	350W	Galvanisé	116.360	116.360
	1					116.360	116.360
	1						116.360

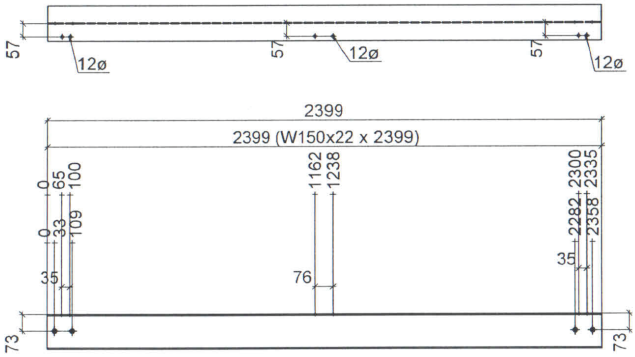

1 - B109 W150x22

d=152 b=152 t=7 w=6 k=18

Grid reference

REGISTERED PROFESSIONAL ENGINEER
NT/NU

CWB certificationcwb CSA W47.1

ALL WELDING PLAN AND WHAT WERE MADE SOUS ALL COMPLIES CWB

Rev.	Date	Par	Description

Projet : CCN-011 WET WELL NEW BEAMS

No. Projet : MH.2018.0839-NCC-11R

Statut :	Commentaire :	
Détaillé par : Moise Harvey	Trou : 13/16"Ø a/n	Client UDLIK CONST.
Vérifié par: Jean Trudeau	Soudure : E70XXE.UCT	No. Dessin : B109
STRUCTURES M.H. inc. ENTREPRENEUR GÉNÉRAL	Acier : 350W	
	Peinture: Galvanisé	Séquence : 0
	Date : 2019-02-20	

Marque	Quantité	Description	Longueur	Nuance	Finition	Poids	Poids total
B110	1	Poutre					
b1007	1	W150x22	2415.0	350W	Galvanisé	117.133	117.133
	1					117.133	117.133
	1						117.133

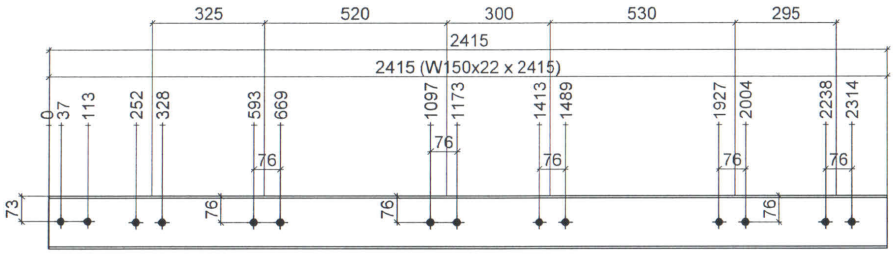

1 - B110 W150x22

d=152 b=152 t=7 w=6 k=18

Grid reference

REGISTERED PROFESSIONAL ENGINEER
NT/NU

ALL WELDING
PLAN AND WHAT
WERE MADE
SOUS ALL COMPLIES
CWB

Rev.	Date	Par	Description

Projet : CCN-011 WET WELL NEW BEAMS

No. Projet : MH.2018.0839-NCC-11R

Statut :	Commentaire :	
Détaillé par : Moise Harvey	Trou : 13/16"Ø u/n	Client: UDLIK CONST.
Vérifié par: Jean Trudeau	Soudure : E70XXELECT	No. Dessin : B110
	Acier : 350W	
	Peinture: Galvanisé	Sequence : 0
	Date : 2019-02-26	

Marque	Quantité	Description	Longueur	Nuance	Finition	Poids	Poids total
M100	1	Garde-corps plinthe palier					
m1002	1	FL100X10	2349.1	G40.21		40.654	40.654
m1003	1	HS38x38x3.2	2387.2	G40.21	Galvanisé	17.367	17.367
m1000	2	HS38x38x3.2	1136.4	G40.21		8.268	16.536
m1001	2	HS38x38x3.2	1113.0	G40.21		8.098	16.195
m1004	1	HS38x38x3.2	1074.9	G40.21		7.821	7.821
p1003	1	PLT6x38.1x114.1	114.1	G40.21	Galvanisé	0.451	0.451
	8					99.025	99.025
	8						99.025

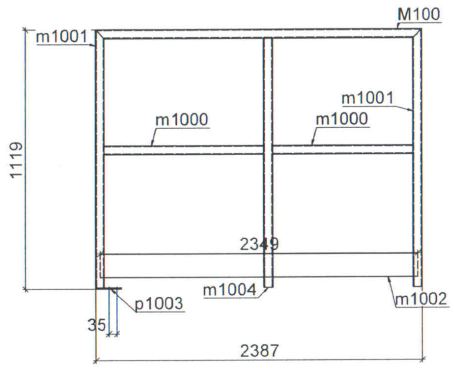

1- M100 HS38x38x3.2

REGISTERED PROFESSIONAL ENGINEER
NT/NU

CWB
certificationcwb
CSA W47.1

ALL WELDING
PLAN AND WHAT
WERE MADE
SOUS ALL COMPLIES
CWB

Rev.	Date	Par	Description

Projet : CCN-011 WET WELL NEW BEAMS
No. Projet : MH.2018.0839-NCC-11R

Statut :	Commentaire :	
Détaillé par : Moise Harvey	Trou : 13/16"Ø u/n	Client: UDLIK CONST.
Vérifié par: Jean Trudeau	Soudure : E70XXELECT	No. Dessin : M100
STRUCTURES M.H. Inc. ENTREPRENEUR GÉNÉRAL	Acier : G40.21	
	Peinture: Galvanisé	Sequence : 0
	Date : 2019-02-26	

Marque	Quantité	Description	Longueur	Nuance	Finition	Poids	Poids total
P100	2	Platine d'extrémité					
p1002	2	PLT13x152x180	180.0	G40.21		6.156	12.311
	2					6.156	12.311
	2						12.311

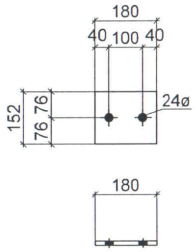

2 - P100 PLT13x152x180

REGISTERED PROFESSIONAL ENGINEER
NT/NU

CWB
certificationcwb
CSA W47.1

ALL WELDING
PLAN AND WHAT
WERE MADE
SOUS ALL COMPLIES
CWB

Rev.	Date	Par	Description

Projet : CCN-011 WET WELL NEW BEAMS
No. Projet : MH.2018.0839-NCC-11R

Statut :	Commentaire :	
Détaillé par : Moise Harvey	Trou : 13/16"ø u/n	Client: UDLIK CONST.
Vérifié par: Jean Trudeau	Soudure : E70XXELECT	No. Dessin : P100
STRUCTURES M.H. Inc. ENTREPRENEUR GÉNÉRAL	Acier : G40.21	
	Peinture: Aucun	Sequence : 0
	Date : 2019-02-20	

Marque	Quantité	Description	Longueur	Nuance	Finition	Poids	Poids total
P101	1	Caillebotis					
p1010	1	McNichols GAA (19P4) 2x3/16 - 698x2435.4		A-1001	Galvanisé	261.628	261.628
	1					261.628	261.628
	1						261.628

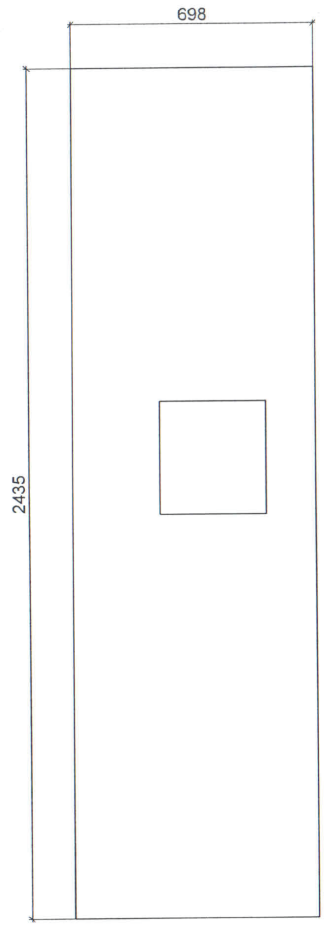

1 - P101 McNichols GAA (19P4) 2x3/16 - 698x2435.4

REGISTERED PROFESSIONAL ENGINEER
NT/NU
20/02/19

CWB certificationcwb CSA W47.1

ALL WELDING
PLAN AND WHAT
WERE MADE
SOUS ALL COMPLIES
CWB

Rev.	Date	Par	Description

Projet : CCN-011 WET WELL NEW BEAMS
No. Projet : MH.2018.0839-NCC-11R

Statut :	Commentaire :	
Détaillé par : Moïse Harvey	Trou : 13/16"Ø u/n	Client: UDLIK CONST.
Vérifié par: Jean Trudeau	Soudure : E70XXELECT	No. Dessin : P101
STRUCTURES M.H. inc. ENTREPRENEUR GÉNÉRAL	Acier : A-1001	
	Peinture: Galvanisé	Sequence : 0
	Date : 2019-02-20	

Marque	Quantité	Description	Longueur	Nuance	Finition	Poids	Poids total
P102	1	Caillebotis					
p1011	1	McNichols GAA (19P4) 2x3/16 - 920x2435.4		A-1001	Galvanisé	344.840	344.840
	1					344.840	344.840
	1						344.840

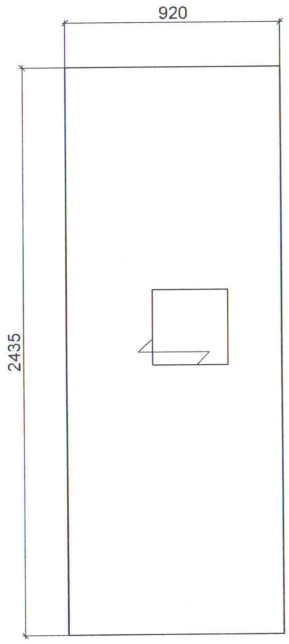

1 - P102 McNichols GAA (19P4) 2x3/16 - 920x2435.4

REGISTERED PROFESSIONAL ENGINEER
NT/NU

CWB
certificationcwb
CSA W47.1

ALL WELDING
PLAN AND WHAT
WERE MADE
SOUS ALL COMPLIES
CWB

Rev.	Date	Par	Description

Projet : CCN-011 WET WELL NEW BEAMS
No. Projet : MH.2018.0839-NCC-11R

Statut :	Commentaire :		
Détaillé par : Moïse Harvey	Trou : 13/16"Ø u/n	Client: UDLIK CONST.	
Vérifié par: Jean Trudeau	Soudure : E70XXELECT	No. Dessin : P102	
STRUCTURES M.H. inc. ENTREPRENEUR GÉNÉRAL	Acier : A-1001		
	Peinture: Galvanisé	Sequence : 0	
	Date : 2019-02-20		

Marque	Quantité	Description	Longueur	Nuance	Finition	Poids	Poids total
P103	1	Caillebotis					
p1012	1	McNichols GAA (19P4) 2x3/16 - 920x2435.4		A-1001	Galvanisé	344.840	344.840
	1					344.840	344.840
	1						344.840

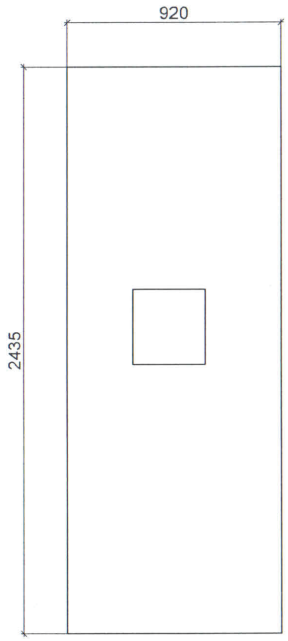

1 - P103 McNichols GAA (19P4) 2x3/16 - 920x2435.4

REGISTERED PROFESSIONAL ENGINEER
NT/NU

CWB
certificationcwb
CSA W47.1

ALL WELDING
PLAN AND WHAT
WERE MADE
SOUS ALL COMPLIES
CWB

Rev.	Date	Par	Description

Projet : CCN-011 WET WELL NEW BEAMS
No. Projet : MH.2018.0839-NCC-11R

Statut :	Commentaire :	
Détaillé par : Moise Harvey	Trou : 13/16"Ø u/n	Client: UDLIK CONST.
Vérifié par: Jean Trudeau	Soudure : E70XXELECT	No. Dessin : P103
STRUCTURES M.H. inc. ENTREPRENEUR GÉNÉRAL	Acier : A-1001	
	Peinture: Galvanisé	Sequence : 0
	Date : 2019-02-20	

Marque	Quantité	Description	Longueur	Nuance	Finition	Poids	Poids total
P104	1	Caillebotis					
p1013	1	McNichols GW (19W4) 1-1/2x3/16 - 2449.1x716		1001	Galvanisé	203.059	203.059
	1					203.059	203.059
	1						203.059

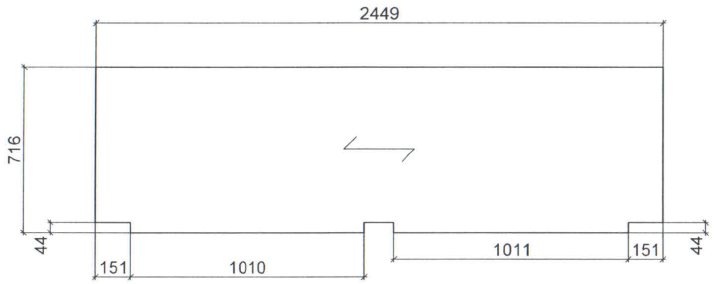

1 - P104 McNichols GW (19W4) 1-1/2x3/16 - 2449.1x716

REGISTERED PROFESSIONAL ENGINEER
NT/NU

ALL WELDING
PLAN AND WHAT
WERE MADE
SOUS ALL COMPLIES
CWB

Rev.	Date	Par	Description

Projet : CCN-011 WET WELL NEW BEAMS
No. Projet : MH.2018.0839-NCC-11R

Statut :	Commentaire :	
Détaillé par : Moise Harvey	Trou : 13/16"Ø u/n	Client: UDLIKCONST.
Vérifié par: Jean Trudeau	Soudure : E70XXELECT	No. Dessin : P104
STRUCTURES M.H. Inc. ENTREPRENEUR GÉNÉRAL	Acier : A-1001	
	Peinture: Galvanisé	Sequence : 0
	Date : 2019-02-20	

Marque	Quantité	Description	Longueur	Nuance	Finition	Poids	Poids total
P105	1						
p1005	1	PLT10x92.4x159	159.0	G40.21	Galvanisé	2544	2.544
	1					2544	2.544
	1						2.544

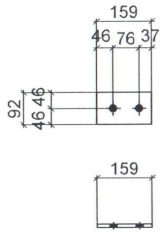

1 - P105 PLT10x92.4x159

REGISTERED PROFESSIONAL ENGINEER
NT/NU

CWB
certificationcwb
CSA W47.1

ALL WELDING
PLAN AND WHAT
WERE MADE
SOUS ALL COMPLIES
CWB

Rev.	Date	Par	Description

Projet : CCN-011 WET WELL NEW BEAMS
No. Projet : MH.2018.0839-NCC-11R

Statut :	Commentaire :	
Détaillé par : Moise Harvey	Trou : 13/16"Ø u/n	Client: JDLM CONST.
Vérifié par: Jean Trudeau	Soudure : E70XXELECT	No. Dessin : P105
STRUCTURES M.H. inc. ENTREPRENEUR GÉNÉRAL	Acier : G40.21	
	Peinture: Galvanisé	Sequence : 0
	Date : 2019-02-20	

Marque	Quantité	Description	Longueur	Nuance	Finition	Poids	Poids total
P106	1	Platine d'extrêmité					
p1008	1	PLT13x152x152	152.0	G40.21		5.198	5.198
	1					5.198	5.198
	1						5.198

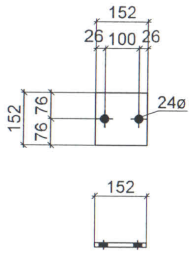

1 - P106 PLT13x152x152

REGISTERED PROFESSIONAL ENGINEER
VT/NU

ALL WELDING PLAN AND WHAT WERE MADE SOUS ALL COMPLIES CWB

Rev.	Date	Par	Description

Projet : CCN-011 WET WELL NEW BEAMS
No. Projet : MH.2018.0839-NCC-11R

Statut :	Commentaire :	
Détaillé par : Moise Harvey	Trou : 13/16"Ø u/n	Client: UDLIK CONST.
Vérifié par: Jean Trudeau	Soudure : E70XXELECT	No. Dessin : P106
STRUCTURES M.H. inc. ENTREPRENEUR GÉNÉRAL	Acier : G40.21	
	Peinture: Aucun	Sequence : 0
	Date : 2019-02-20	

Marque	Quantité	Description	Longueur	Nuance	Finition	Poids	Poids total
P107	1	Platine d'extrémité					
p1001	1	PLT13x152x152	152.0	G40.21		5.198	5.198
p1004	1	PLT10x92.4x159	159.0	G40.21	Galvanisé	2.544	2.544
	2					7.741	7.741
	2						7.741

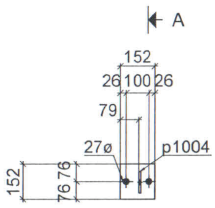

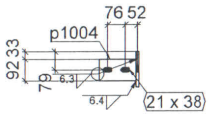

Section A - A

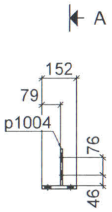

1 - P107 PLT13x152x152

REGISTERED PROFESSIONAL ENGINEER
NT/NU
20/02/29

ALL WELDING PLAN AND WHAT WERE MADE SOUS ALL COMPLIES CWB

Rev.	Date	Par	Description

Projet : CCN-011 WET WELL NEW BEAMS
No. Projet : MH.2018.0839-NCC-11R

Statut :	Commentaire :	
Détaillé par : Moïse Harvey	Trou : 13/16"Ø s/n	Client:UDLIK CONST.
Vérifié par: Jean Trudeau	Soudure : E70XXELECT	No. Dessin : P107
STRUCTURES M.H. inc. ENTREPRENEUR GÉNÉRAL	Acier : G40.21	
	Peinture: Aucun	Sequence : 0
	Date : 2019-02-20	

Marque	Quantité	Description	Longueur	Nuance	Finition	Poids	Poids total
P108	1	Platine d'extrémité					
p1001	1	PLT13x152x152	152.0	G40.21		5.198	5.198
p1006	1	PLT10x92.4x160	160.0	G40.21	Galvanisé	2.560	2.560
	2					7.757	7.757
	2						7.757

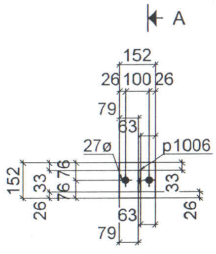

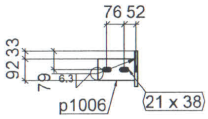

Section A - A

1 - P108 PLT13x152x152

REGISTERED PROFESSIONAL ENGINEER
J. TRUDEAU
20/02/19
NT/NU

CWB certificationcwb CSA W47.1

ALL WELDING PLAN AND WHAT WERE MADE SOUS ALL COMPLIES CWB

Rev.	Date	Par	Description

Projet : CCN-011 WET WELL NEW BEAMS
No. Projet : MH.2018.0839-NCC-11R

Statut :	Commentaire :	
Détaillé par : Moise Harvey	Trou : 13/16"Ø u/n	Client: UDUIK CONST.
Vérifié par: Jean Trudeau	Soudure : E70XXELECT	No. Dessn : P108
STRUCTURES M.H. inc. ENTREPRENEUR GÉNÉRAL	Acier : G40.21	
	Peinture: Aucun	Sequence: 0
	Date : 2019-02-20	

Marque	Quantité	Description	Longueur	Nuance	Finition	Poids	Poids total
P109	1	Platine d'extrémité					
p1001	1	PLT13x152x152	152.0	G40.21		5.198	5.198
p1007	1	PLT10x92.4x169	169.0	G40.21	Galvanisé	2.703	2.703
	2					7.901	7.901
	2						7.901

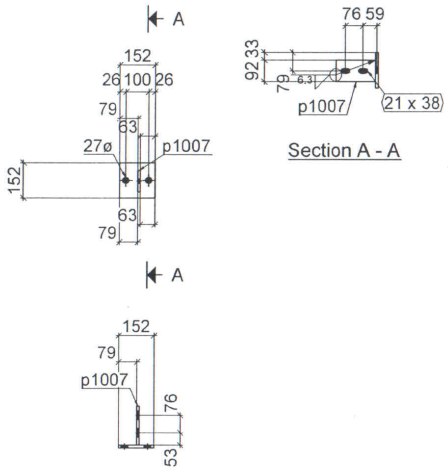

1 - P109 PLT13x152x152

REGISTERED PROFESSIONAL ENGINEER
NT/NU

CWB
certificationcwb
CSA W47.1

ALL WELDING
PLAN AND WHAT
WERE MADE
SOUS ALL COMPLIES
CWB

Rev.	Date	Par	Description

Projet : CCN-011 WET WELL NEW BEAMS
No. Projet : MH.2018.0839-NCC-11R

Statut :	Commentaire :	
Détaillé par : Moise Harvey	Trou : 13/16"Ø u/n	Client: UDLIK CONST.
Vérifié par: Jean Trudeau	Soudure : E70XXELECT	No. Dessin : P109
STRUCTURES M.H. inc. ENTREPRENEUR GÉNÉRAL	Acier : G40.21	
	Peinture: Aucun	Sequence : 0
	Date : 2019-02-20	

Marque	Quantité	Description	Longueur	Nuance	Finition	Poids	Poids total
P110	1						
p1003	1	PLT6x38.1x114.1	114.1	G40.21	Galvanisé	0.451	0.451
	1					0.451	0.451
	1						0.451

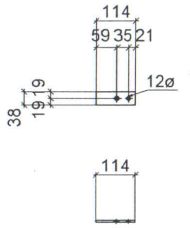

1 - P110 PLT6x38.1x114.1

REGISTERED PROFESSIONAL ENGINEER
NT/NU

CWB
certificationcwb
CSA W47.1

ALL WELDING
PLAN AND WHAT
WERE MADE
SOUS ALL COMPLIES
CWB

Rev.	Date	Par	Description

Projet : CCN-011 WET WELL NEW BEAMS
No. Projet : MH.2018.0839-NCC-11R

Statut :	Commentaire :	
Détaillé par : Moise Harvey	Trou : 13/16"Ø u/n	Client: UDLIK CONST.
Vérifié par: Jean Trudeau	Soudure : E70XXELECT	No. Dessin : P110
STRUCTURES M.H. inc. ENTREPRENEUR GÉNÉRAL	Acier : G40.21	
	Peinture: Galvanisé	Sequence : 0
	Date : 2019-02-20	

Marque	Quantité	Description	Longueur	Nuance	Finition	Poids	Poids total
P111	1						
p1009	1	PLT6x38.1x114.1	114.1	G40.21	Galvanisé	0.451	0.451
	1					0.451	0.451
	1						0.451

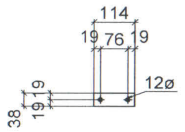



1 - P111 PLT6x38.1x114.1

REGISTERED PROFESSIONAL ENGINEER
NT/NU

CWB certificationcwb CSA W47.1

ALL WELDING
PLAN AND WHAT
WERE MADE
SOUS ALL COMPLIES
CWB

Rev.	Date	Par	Description

Projet : CCN-011 WET WELL NEW BEAMS
No. Projet : MH.2018.0839-NCC-11R

Statut :	Commentaire :	
Détaillé par : Moise Harvey	Trou : 13/16"Ø u/n	Client: UDLIK CONST.
Vérifié par: Jean Trudeau	Soudure : E70XXELECT	No. Dessin : P111
STRUCTURES M.H. inc. ENTREPRENEUR GÉNÉRAL	Acier : G40.21	
	Peinture: Galvanisé	Sequence : 0
	Date : 2019-02-20	

SUBMITTALS IDENTIFICATION SHEET

PROJECT: Wastewater Treatment Plant Upgrade
Iqaluit, Nunavut

NUNAMI
STANTEC LIMITED

1088C Noble House
Iqaluit NU
www.stantec.com

CONTRACTOR: Kudlik Construction Ltd, Project 2018-062

Telephone: 867-979-1166

E-mail: srousseau@kudlik.biz

SUBCONTRACTOR: Structure MH

Person responsible: Moise Harvey

Telephone: (418)487-8772 E-mail: structures.mh@gmail.com

PRODUCT SUBMITTED:

☑ As Specified

☐ Alternate

SUPPLIER or MANUFACTURER:

Person responsible:

Telephone: E-mail:

DESCRIPTION OF SUBMITTAL:

# of pages:

Reference to drawings:

Reference to specs:

Division: 05 Section: 05 12 23 - 05 21 00

REMARKS:

Chimney and floor opening

REVIEW AND COMMENTS (for use by Consultants):

STANTEC PROJECT #: 110126045 SUBMITTAL # STC-024

This review by Stantec is for general conformance with the design concept of Stantec's design of the:

☐ Architectural ☐ Electrical
☐ Structural ☐ Other
☐ Mechanical

component(s) only and does not mean that Stantec has verified or approves the shop drawing(s). The Contractor remains solely responsible for the shop drawing(s) and this review by Stantec does not relieve the Contractor of the Contractor's responsibility for errors or omissions in the shop drawing(s) or for meeting all requirements of the contract documents. This review does not mean that Stantec approves the detailed design inherent in the shop drawing, responsibility for which shall remain with the Contractor submitting same, nor does this review mean that Stantec accepts any deviation of the shop drawing(s) from the contract documents. The Contractor is responsible for confirming all dimensions and correlating them at the job site, for all construction means, methods and techniques, and for coordination of construction work of all trades, including coordination of all shop drawings.

Stantec

☐ REVIEWED

☑ REVIEWED, AS NOTED

☐ REVISE AND RESUBMIT

☐ NOT REVIEWED

DATE 2019-03-22

BY pclyne

Review of this submission is for compliance with general intent of the contract. This review does not relieve the Sub-Contractor, Supplier or Manufacturer of responsibility for error or omissions in the submission or the responsibility of meeting all requirements of the contract documents. Any deviation from the contract documents initiated by the Sub-Contractor, Supplier or Manufacturer shall be at their sole risk. QUANTITIES AND DETAIL DIMENSIONS ARE THE SUB-CONTRACTORS OR SUPPLIERS RESPONSIBILITY. VERIFY DATA WITH FIELD DIMENSIONS.

SUBMITTAL TRACKING No.: **STC-024**

2019-02-20

floor opening for electrical cable tray

this looks like the chimney opening?

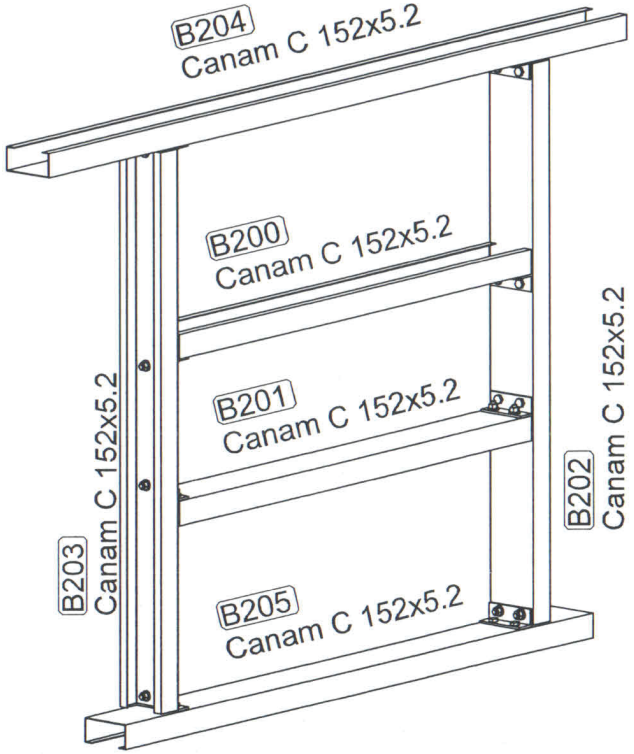

3D view

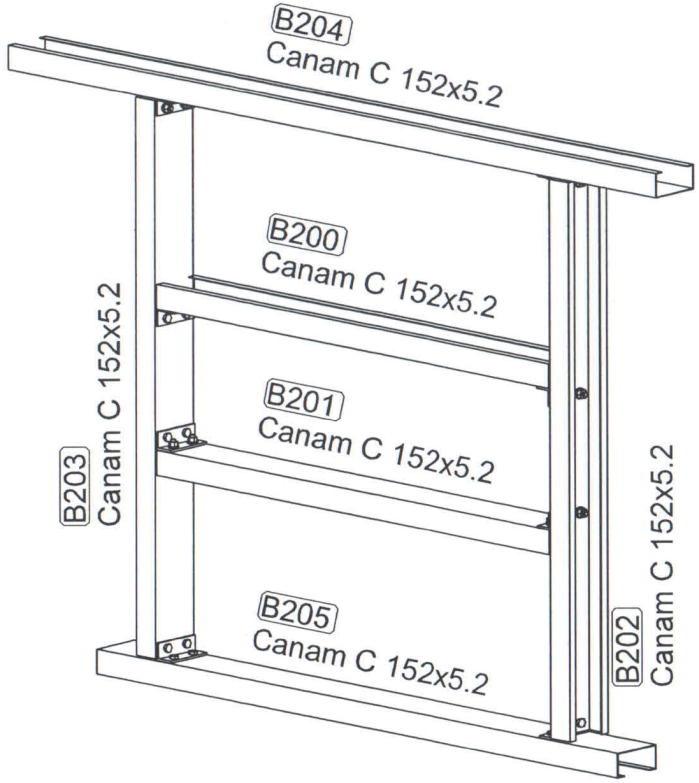

3D view

REGISTERED PROFESSIONAL ENGINEER
20/02/19
NT/NU

ALL WELDING PLAN AND WHAT WERE MADE SOUS ALL COMPLIES CWB

Rev.	Date	Par	Description

Projet : OPENING UPPER FLOOR

No. Projet : MH.2018.0839-OPENING

Statut :	Commentaire :	
Détaillé par : Julie Lajoie	Trou : 13/16"Ø u/n	Client : KUBIK CONSTRUCTION LTD
Vérifié par: Jean trudeau	Soudure : E70XXELECT	No. dessin : 0-0
STRUCTURES M.H. inc. ENTREPRENEUR GÉNÉRAL	Acier : 350W-CLC,G40.21	
	Peinture: Aucun	Sequence : 0
	Date : 2019-02-20	

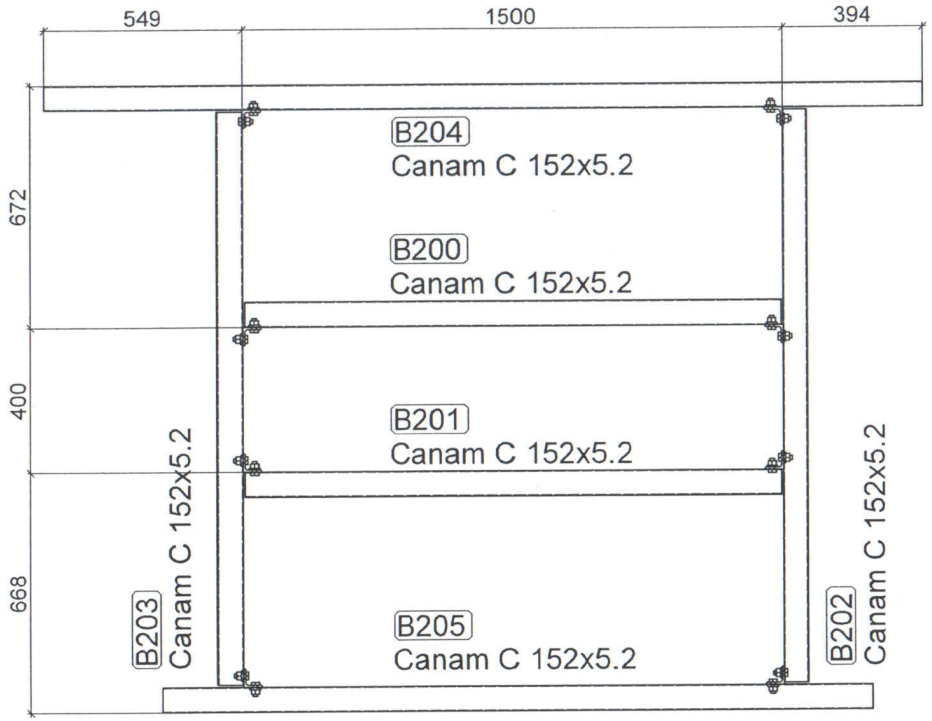

Elevation

REGISTERED PROFESSIONAL ENGINEER
NT/NU

ALL WELDING PLAN AND WHAT WERE MADE SOUS ALL COMPLIES CWB

Rev.	Date	Par	Description

Projet : OPENING UPPER FLOOR

No. Projet : MH.2018.0839-OPENING

Statut :	Commentaire :	
Détaillé par : Julie Lajoie	Trou : 13/16"Ø u/n	Client : KUGLIK CONSTRUCTION LTD
Vérifié par: Jean trudeau	Soudure : E70XXELECT	No. Dessin : 1-1
	Acier : 350W-CLC,G40.21	
	Peinture: Aucun	Sequence : 0
	Date : 2019-02-20	

STRUCTURES M.H. inc. ENTREPRENEUR GÉNÉRAL

Marque	Quantité	Description	Longueur	Nuance	Finition	Poids	Poids total
B201	1						
b1201	1	Canam C 152x5.2	1488.0	350W-CLC		17.058	17.058
m1200	2	L51X51X6.4	146.3	G40.21		1.516	3.032
1200	4	12.7ø A325	31.8	10.9		0.306	1.224
	7					2.314	21.314
	7						21.314

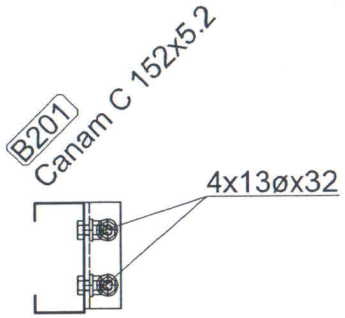

Section A - A

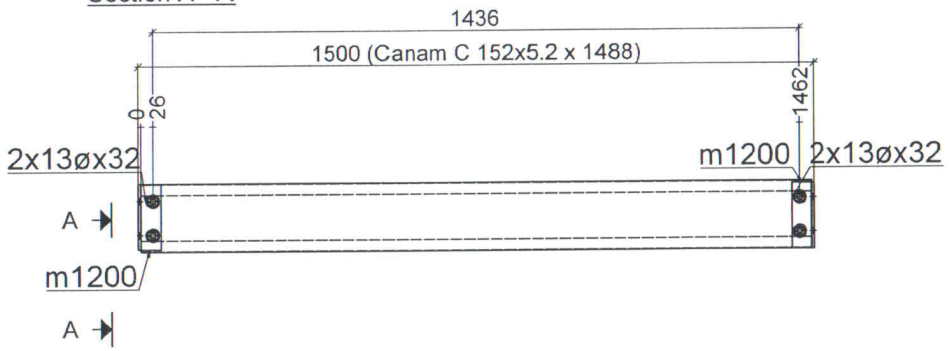

1 - B201 Canam C 152x5.2
Grid reference

REGISTERED PROFESSIONAL ENGINEER
LICENSED
IT/NU

ALL WELDING
PLAN AND WHAT
WERE MADE
SOUS ALL COMPLIES
CWB

Rev.	Date	Par	Description

Projet : OPENING UPPER FLOOR
No. Projet : MH.2018.0839-OPENING

Statut :	Commentaire :	
Détaillé par : Julie Lajoie	Trou : 1/16"Ø u/n	Client : CONSTRUCTION LTD
Vérifié par: Jean trudeau	Soudure : E70XXELECT	No. dessin : B201
	Acier : 350W-CLC	
	Peinture: Aucun	Sequence : 0
	Date : 2019-02-20	

Quantité	Description	Longueur	Finition
4	12.7ø A325	32	

Marque	Quantité	Description	Longueur	Nuance	Finition	Poids	Poids total
B200	1						
b1201	1	Canam C 152x5.2	1488.0	350W-CL.C		17.058	17.058
m1200	2	L51X51X6.4	146.3	G40.21		1.516	3.032
1200	4	12.7ø A325	31.8	10.9		0.306	1.224
	7					21.314	21.314
	7						21.314

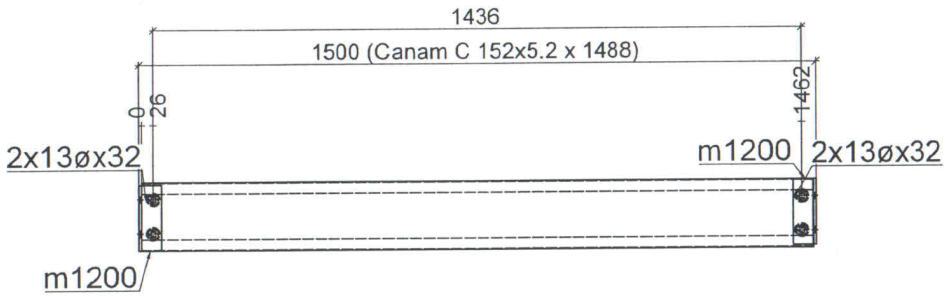

1 - B200 Canam C 152x5.2
Grid reference

REGISTERED PROFESSIONAL ENGINEER
28/08/19
NT/NU

CWB
certificationcwb
CSA W47.1

ALL WELDING PLAN AND WHAT WERE MADE SOUS ALL COMPLIES CWB

Rev.	Date	Par	Description

Projet : OPENING UPPER FLOOR
No. Projet : MH.2018.0839-OPENING

Statut :	Commentaire :	
Détaillé par : Julie Lajoie	Trou : 13/16"Ø u/n	Client CONSTRUCTION LTD
Vérifié par: Jean trudeau	Soudure : E70XXELECT	No. Dessin : B200
STRUCTURES M.H. inc. ENTREPRENEUR GÉNÉRAL	Acier : 350W-CL.C	
	Peinture: Aucun	Sequence : 0
	Date : 2019-02-20	

Quantité	Description	Longueur	Finition
4	12.7ø A325	32	

Marque	Quantité	Description	Longueur	Nuance	Finition	Poids	Poids total
B203	1						
b1200	1	Canam C 152x5.2	1588.0	350W-CL.C		18.205	18.205
m1200	2	L51X51X6.4	146.3	G40.21		1.516	3.032
1200	4	12.7ø A325	31.8	10.9		0.306	1.224
	7					22.461	22.461
	7						22.461

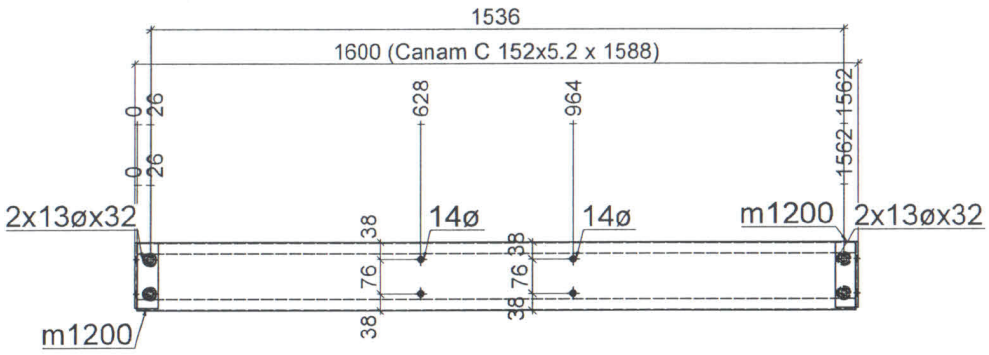

1 - B203 Canam C 152x5.2
Grid reference

REGISTERED PROFESSIONAL ENGINEER
NT/NU
20/02/19

CWB
certificationcwb
CSA W47.1

ALL WELDING
PLAN AND WHAT
WERE MADE
SOUS ALL COMPLIES
CWB

Rev.	Date	Par	Description

Projet : OPENING UPPER FLOOR
No. Projet : MH.2018.0839-OPENING

Statut :	Commentaire :	
Détaillé par : Julie Lajoie	Trou : 13/16"Ø u/n	Client : CONSTRUCTION LTD
Vérifié par: Jean trudeau	Soudure : E70XXELECT	No. Dessin : B203
STRUCTURES M.H. inc. ENTREPRENEUR GÉNÉRAL	Acier : 350W-CL.C	
	Peinture: Aucun	Sequence : 0
	Date : 2019-02-20	

Quantité	Description	Longueur	Finition
4	12.7ø A325	32	

Marque	Quantité	Description	Longueur	Nuance	Finition	Poids	Poids total
B202	1						
b1200	1	Canam C 152x5.2	1588.0	350W-CL.C		18.205	18.205
m1200	2	L51X51X6.4	146.3	G40.21		1.516	3.032
1200	4	12.7ø A325	31.8	10.9		0.306	1.224
	7					22.461	22.461
	7						22.461

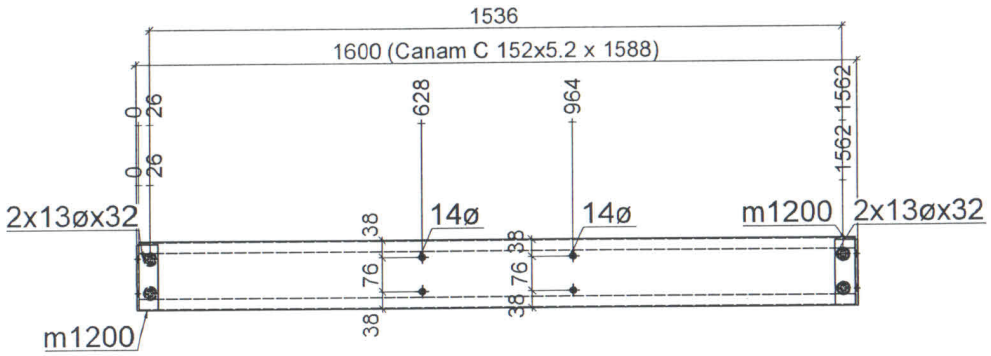

1- B202 Canam C 152x5.2
Grid reference

REGISTERED PROFESSIONAL ENGINEER
NT/NU
29/02/19

CWB
certificationcwb
CSA W47.1

ALL WELDING
PLAN AND WHAT
WERE MADE
SOUS ALL COMPLIES
CWB

Rev.	Date	Par	Description

Projet : OPENING UPPER FLOOR
No. Projet : MH.2018.0839-OPENING

Statut :	Commentaire :	
Détaillé par : Julie Lajoie	Trou : 13/16"Ø u/n	Client CONSTRUCTION LTD
Vérifié par: Jean trudeau	Soudure : E70XXELECT	No. Dessin : B202
STRUCTURES M.H. inc. ENTREPRENEUR GÉNÉRAL	Acier : 350W-CL.C	
	Peinture: Aucun	Sequence : 0
	Date : 2019-02-20	

Quantité	Description	Longueur	Finition
4	12.7ø A325	32	

Marque	Quantité	Description	Longueur	Nuance	Finition	Poids	Poids total



1 - B204 Canam C 152x5.2
Grid reference

REGISTERED PROFESSIONAL ENGINEER
20/02/19
NT/NU

CWB
certificationcwb
CSA W47.1

ALL WELDING
PLAN AND WHAT
WERE MADE
SOUS ALL COMPLIES
CWB

Rev.	Date	Par	Description

Projet : OPENING UPPER FLOOR
No. Projet : MH.2018.0839-OPENING

Statut :	Commentaire :	
Détaillé par : Julie Lajoie	Trou : 13/16"Ø u/n	Client CONSTRUCTION LTD
Vérifié par: Jean trudeau	Soudure : E70XXELECT	No. Dessin : B204
STRUCTURES M.H. inc. ENTREPRENEUR GÉNÉRAL	Acier : 350W-CL.C	
	Peinture: Aucun	Sequence : 0
	Date : 2019-02-20	

Quantité	Description	Longueur	Finition

chimney opening

this looks like the floor opening.

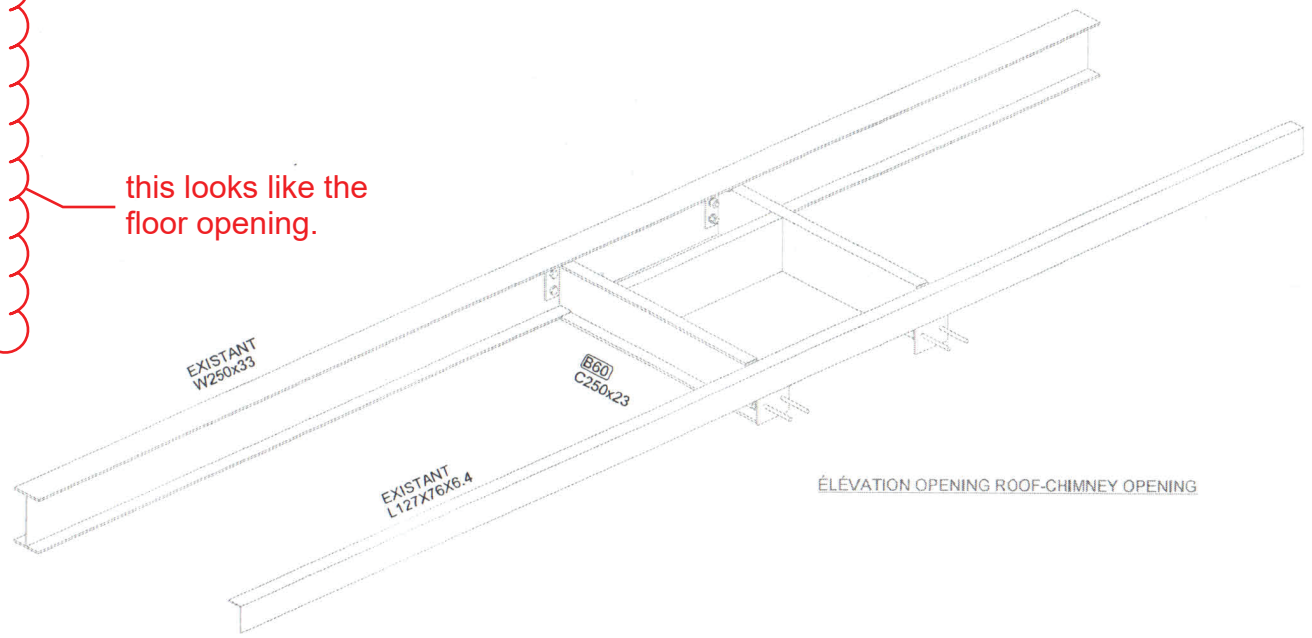

ÉLÉVATION OPENING ROOF-CHIMNEY OPENING

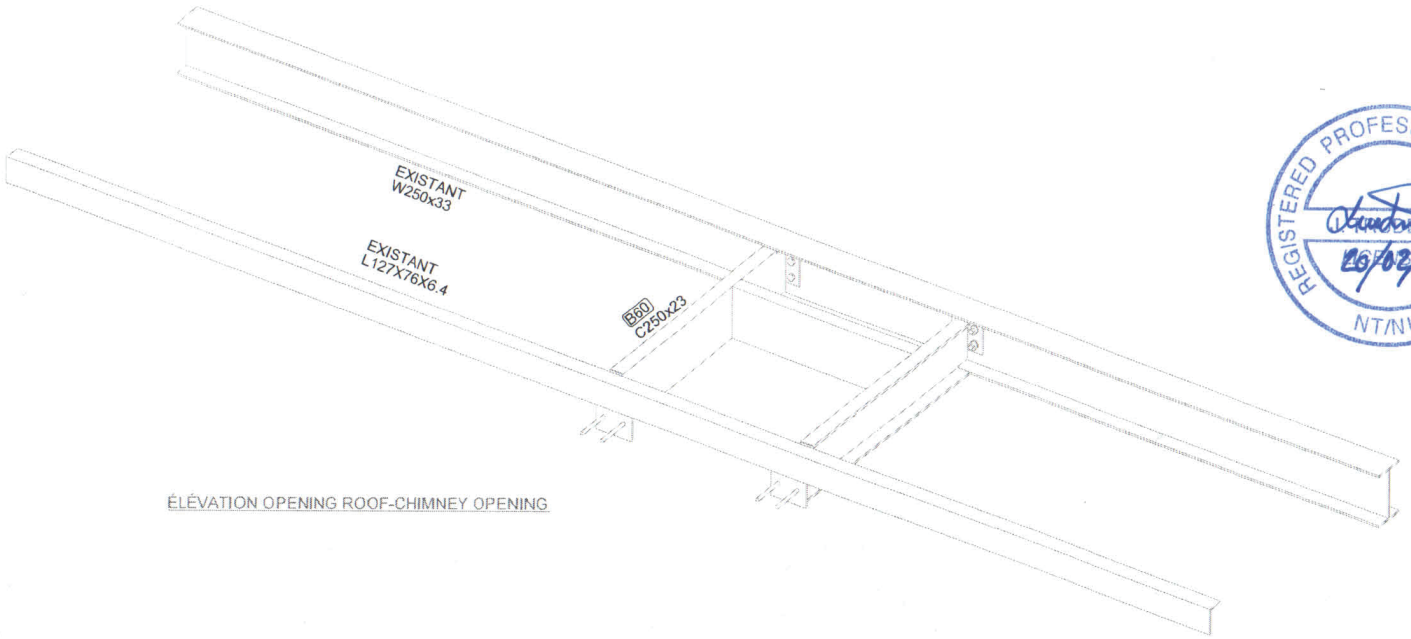

ÉLÉVATION OPENING ROOF-CHIMNEY OPENING

REGISTERED PROFESSIONAL ENGINEER
20/02/15
NT/NU

PROJET : IQALUIT

WASREWATER TREATMENT

PLANT UPGRADE

DIRECTIVE CNN-OPENING

ALL WELDING PLAN AND WHAT WERE MADE SOUS ALL COMPLIES CWB

Rev.	Date	Par	Description

STRUCTURES M.H. inc.
ENTREPRENEUR GÉNÉRAL
1670 Av. de la Technologie, Alma G8C 1E0
Téléphone : 418 480-2186 Télécopieur : 418 668-9235
structures.mh@gmail.com
RBQ : 1612-0215-41

Date : 2018-02-20

INGÉNIEUR : Jean trudeau

Client : KUDLIK CONSTRUCTION LTD

Projet : OPENING ROOF-CHIMNEY OPENING

No. Projet : MH.2018.0839-OPENING

Détaillé par : Julie Lajoie

TITRE : VUE 3D OPENING ROOF-CHIMNEY OPENING

Soudure : [illegible]
Trou : [illegible]
Acier : [illegible]
Peinture : [illegible]

No. Dessin : D-0

Séquence : 0

Marque	Quantité	Description	Longueur	Nuance	Finition	Poids	Poids total
B60	1						
b601	1	C250x23	1282.3	300W		6522	65.022
b600	1	C250x23	1282.3	300W		6522	65.022
b602	1	C250x23	899.8	300W		4527	45.627
p601	2	PLT10x152.4x152.4	152.4	G40.21		420	8.039
p600	2	PLT10x124x180	180.0	G40.21		363	7.726
	7					19186	191.436
	7						191.436

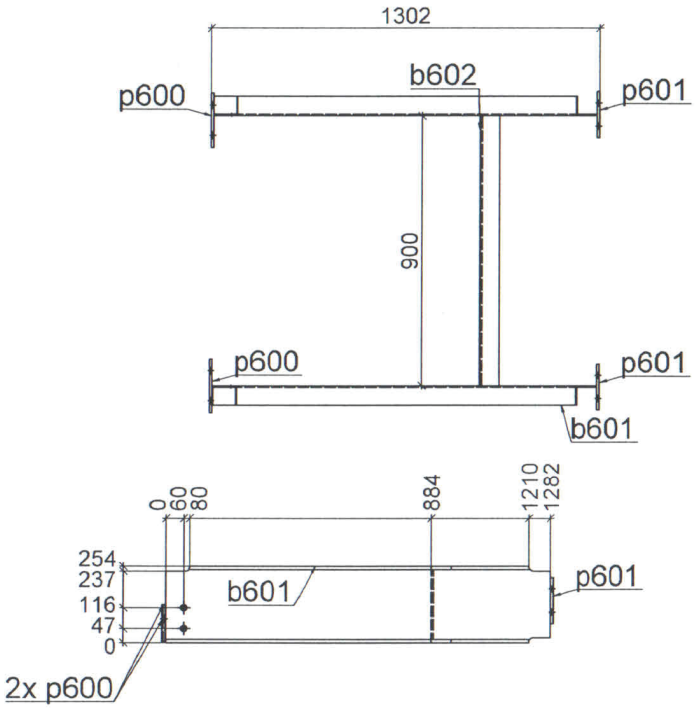

1 - B60 C250x23
Grid reference

REGISTERED PROFESSIONAL ENGINEER
NINU
28/2/19

Rev.	Date	Par	Description

Projet : OPENING ROOF-CHIMNEY OPNING
No. Projet : MH.2018.0839_ST

Statut :	Commentaire :	
Détaillé par : Julie Lajoie	Trou : 13/16"Ø u/n	CONSTRUCTION LTD
Vérifié par: Jean trudeau	Soudure : E70XXELECT	N Dessin : B60
STRUCTURES M.H. inc. ENTREPRENEUR GÉNÉRAL	Acier : 300W	
	Peinture: Aucun	Séquence : 0
	Date : 2019-02-20	

Quantité	Description	Longueur	Finition
2	19.1x A325	44	Galvanisé
4	19.1x A325	44	

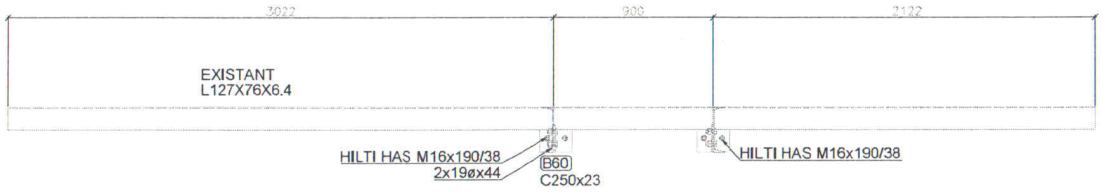

ÉLÉVATION OPENING ROOF-CHIMNEY OPENING

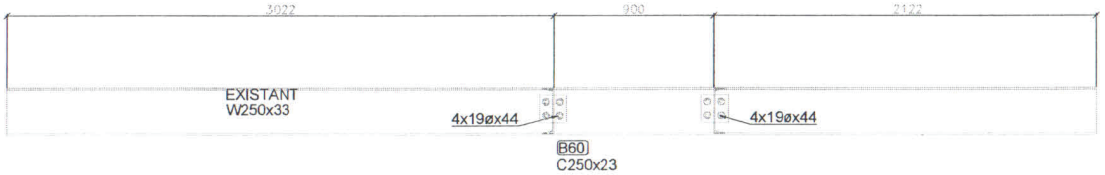

ÉLÉVATION OPENING ROOF-CHIMNEY OPENING

REGISTERED PROFESSIONAL ENGINEER
NT/NU
20/02/19

PROJET : IQALUIT
WASREWATER TREATMENT
PLANT UPGRADE

DIRECTIVE CNN-OPENING

CWB Certification cwb
ALL WELDING PLAN AND WHAT WERE MADE SOUS ALL COMPLIES CWB

Rev.	Date	Par	Description

STRUCTURES M.H. inc.
ENTREPRENEUR GÉNÉRAL
5570 Av. de la Technologie, Alma (QC) E8E
Téléphone : 418 480-2186 Télécopieur : 418 668-9035
structures.mh@gmail.com
RBQ : 5612-0215-01

Date : 2019-02-20

INGÉNIEUR : Jean Dudeau

Client :
KUDLIK CONSTRUCTION LTD

Projet :
OPENING ROOF-CHIMNEY OPENING

No. Projet :
MH-2018-0838-OPENING

Détaillé par :
Julie Lajoie

TITRE :
VUE 3D
OPENING
ROOF-CHIMNEY OPENING

Soudure :		No. Dessin :
Trou :		1-1
Acier :		
Peinture :		Séquence :

Marque	Quantité	Description	Longueur	Nuance	Finition	Poids	Poids total
P61	1	Plat soudé sur côté					
p603	1	PLT10x89x152.4	152.4	G40.21		2.347	2.347
	1					2.347	2.347
	1						2.347

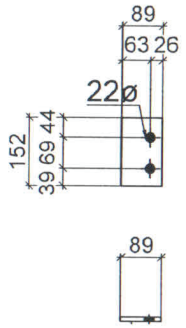

1 - P61 PLT10x89x152.4

REGISTERED PROFESSIONAL ENGINEER
J. TRUDEAU
LICENSEE
NT/NU

Rev.	Date	Par	Description

Projet : OPENING ROOF-CHIMNEY OPENING
No. Projet : MH.2018.0839_ST

Statut :	Commentaire :	
Détaillé par : Julie Lajoie	Trou : 13/16"Ø u/n	Client CONSTRUCTION LTD
Vérifié par: Jean trudeau	Soudure : E70XXELECT	No. Dessin : P61
STRUCTURES M.H. inc. ENTREPRENEUR GÉNÉRAL	Acier : G40.21	
	Peinture: Aucun	Sequence : 0
	Date : 2019-02-20	

Quantité	Description	Longueur	Finition

Marque	Quantité	Description	Longueur	Nuance	Finition	Poids	Poids total
P60	1	Plat soudé sur côté					
p602	1	PLT10x89x152.3	152.3	G40.21		2.347	2.347
	1					2.347	2.347
	1						2.347

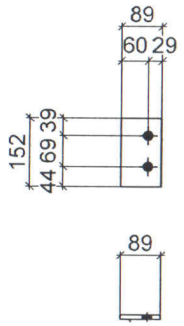

1 - P60 PLT10x89x152.3

REGISTERED PROFESSIONAL ENGINEER
J. TRUDEAU
LICENSEE
NT/NU

Rev.	Date	Par	Description

Projet : OPENING ROOF-CHIMNEY OPENING

No. Projet : MH.2018.0839_ST

Statut :	Commentaire :	
Détaillé par : Julie Lajoie	Trou : 13/16"Ø u/n	Client : KUBERT CONSTRUCTION LTD
Vérifié par: Jean trudeau	Soudure : E70XXELECT	No. Dessin : P60
STRUCTURES M.H. inc. ENTREPRENEUR GÉNÉRAL	Acier : G40.21	
	Peinture: Aucun	Sequence : 0
	Date : 2019-02-20	

Quantité	Description	Longueur	Finition
2	19.1# A 325	44	

SUBMITTALS IDENTIFICATION SHEET

PROJECT: Wastewater Treatment Plant Upgrade
Iqaluit, Nunavut

NUNAMI
STANTEC LIMITED

1088C Noble House
Iqaluit NU
www.stantec.com

CONTRACTOR: Kudlik Construction Ltd, Project 2018-062

Telephone: 867-979-1166

E-mail: srousseau@kudlik.biz

SUBCONTRACTOR: Structure MH

Person responsible: Moise Harvey

Telephone: (418)487-8772 E-mail: structures.mh@gmail.com

PRODUCT SUBMITTED:

☑ As Specified

☐ Alternate

SUPPLIER or MANUFACTURER:

Person responsible:

Telephone: E-mail:

DESCRIPTION OF SUBMITTAL:

# of pages:

Reference to drawings:

Reference to specs:

Division: 05 Section: 05 12 23 - 05 21 00

REMARKS:

TWAS tank + CCN-010

REVIEW AND COMMENTS (for use by Consultants):

STANTEC PROJECT #: 110126045 SUBMITTAL # STC-025

This review by Stantec is for general conformance with the design concept of Stantec's design of the:

☐ Architectural ☐ Electrical
☐ Structural ☐ Other
☐ Mechanical

component(s) only and does not mean that Stantec has verified or approves the shop drawing(s). The Contractor remains solely responsible for the shop drawing(s) and this review by Stantec does not relieve the Contractor of the Contractor's responsibility for errors or omissions in the shop drawing(s) or for meeting all requirements of the contract documents. This review does not mean that Stantec approves the detailed design inherent in the shop drawing, responsibility for which shall remain with the Contractor submitting same, nor does this review mean that Stantec accepts any deviation of the shop drawing(s) from the contract documents. The Contractor is responsible for confirming all dimensions and correlating them at the job site, for all construction means, methods and techniques, and for coordination of construction work of all trades, including coordination of all shop drawings.

Stantec

☑ REVIEWED

☐ REVIEWED, AS NOTED

☐ REVISE AND RESUBMIT

☐ NOT REVIEWED

DATE 2019-03-27

BY pclyne

Review of this submission is for compliance with general intent of the contract. This review does not relieve the Sub-Contractor, Supplier or Manufacturer of responsibility for error or omissions in the submission or the responsibility of meeting all requirements of the contract documents. Any deviation from the contract documents initiated by the Sub-Contractor, Supplier or Manufacturer shall be at their sole risk. QUANTITIES AND DETAIL DIMENSIONS ARE THE SUB-CONTRACTORS OR SUPPLIERS RESPONSIBILITY. VERIFY DATA WITH FIELD DIMENSIONS.

SUBMITTAL TRACKING No.: **STC-025**

2019-02-20

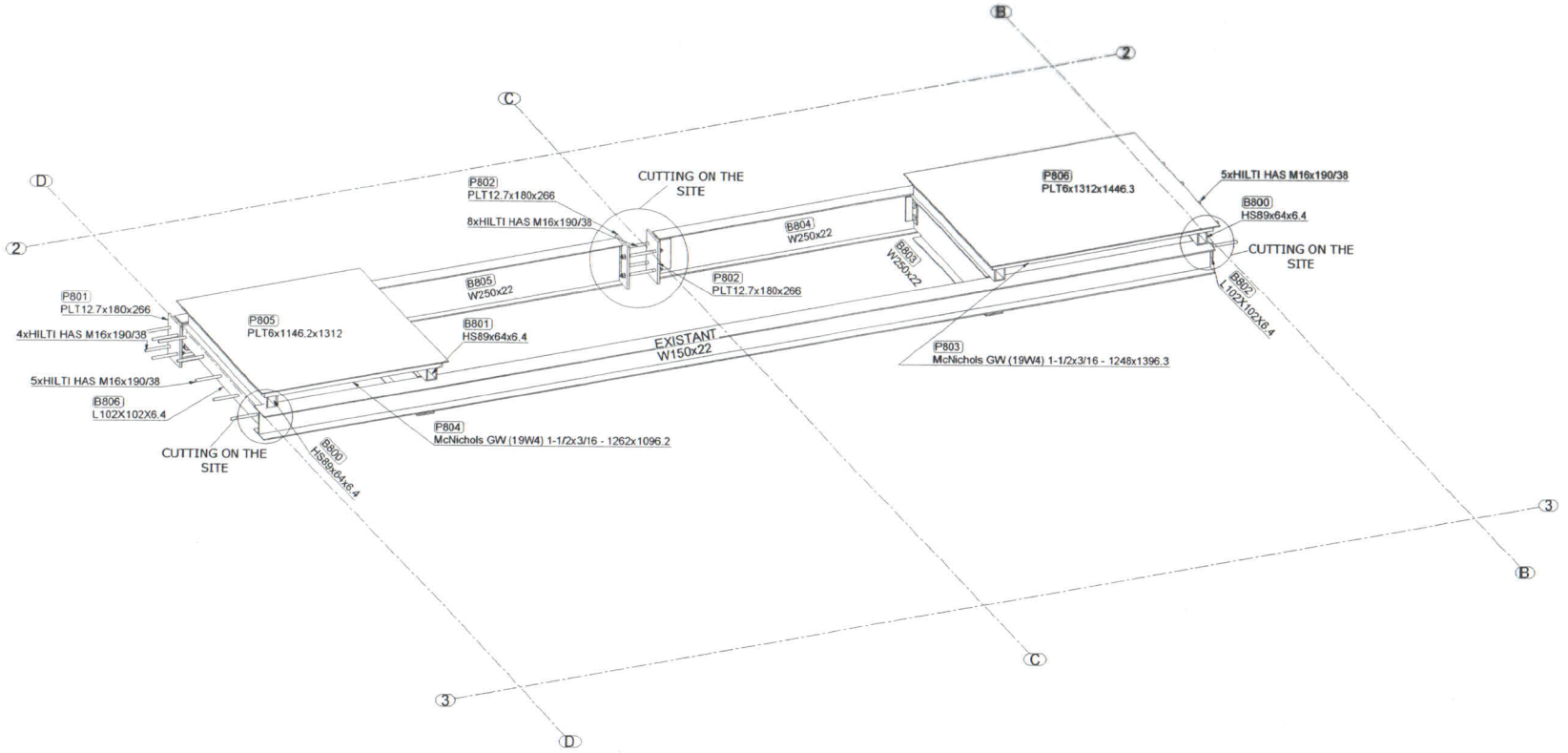

3D VIEW

PROJET :

IQALUIT

WASREWATER TREATMENT

PLANT UPGRADE

DIRECTIVE CNN-10

ALL WELDING PLAN AND WHAT WERE MADE SOUS ALL COMPLIES CWB

Rev.	Date	Par	Description

STRUCTURES M.H. inc.

ENTREPRENEUR GÉNÉRAL

1670 Av. de la Technologie Alma G6C 1J0

Téléphone : 418 480-2186 Télécopieur : 418 668-9235

structures.mh@gmail.com

RBQ : 5612-021-01

Date : 2019-02-19

INGÉNIEUR : JEAN TRUDEAU

REGISTERED PROFESSIONAL ENGINEER

20/02/19

NT/NU

Client : KUDLIK CONST.

Projet : CCN-010 THANK OPENING

No. Projet : MH.2018.084_ST

Détaillé par : MOISE HARVEY

TITRE : VUE 3D CCN-10 THANK OPENING

Soudure : E70XXELECT

Trou : 13/16"Ø um

Acier : 300W,350W,A-1001,G40.21,G40.28M-50W

Peinture : Aucun,Galvanisé

No. Dessin : C-0

Sequence : 0

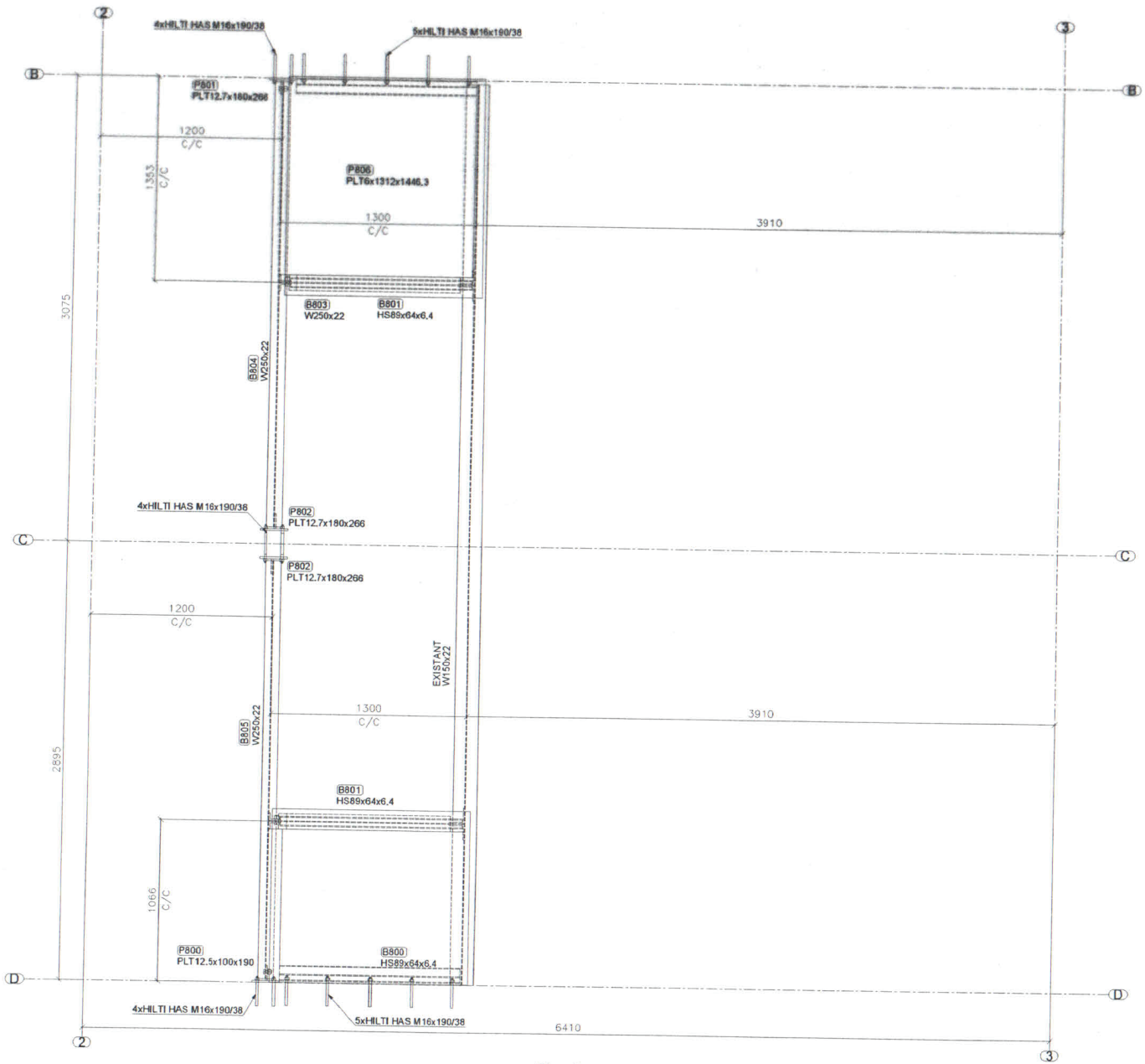

Plan view

PROJET:

IQALUIT

WAREWATER TREATMENT

PLANT UPGRADE

DIRECTIVE CNN-10

REGISTERED PROFESSIONAL ENGINEER
NT/NU
26/02/19

ALL WELDING PLAN AND WHAT WERE MADE SOUS ALL COMPLIES CWB

Rev.	Date	Par	Description

STRUCURES M.H. inc.
ENTREPRENEUR GÉNÉRAL
16701, de la Technologie, Mirra G8C 1E0
Téléphone: 18 480-2186 Téléphone : 418 668-9231
structures.mh@gmail.com
RBQ: 5612-0215-01

Date : 2019-0-19

INGÉNIEUR JEAN TRUDEAU

Client : KUDLIK CONST.

Projet : CC-010 THANK OPENNIG

No. Projet : MH.2018.0840_ST

Détaillé par : MOISE HARVEY

TITRE : VUE DETAIL CCN-10 THANK OPENING

Soudure : E70XXELEX
Trou : 15/16"Ø vin
Acier : 300W,350W,G40,G40,24A-350W
Peinture: Aucun,Galvanisé

No. Dessin : 1-1

Sequence 0

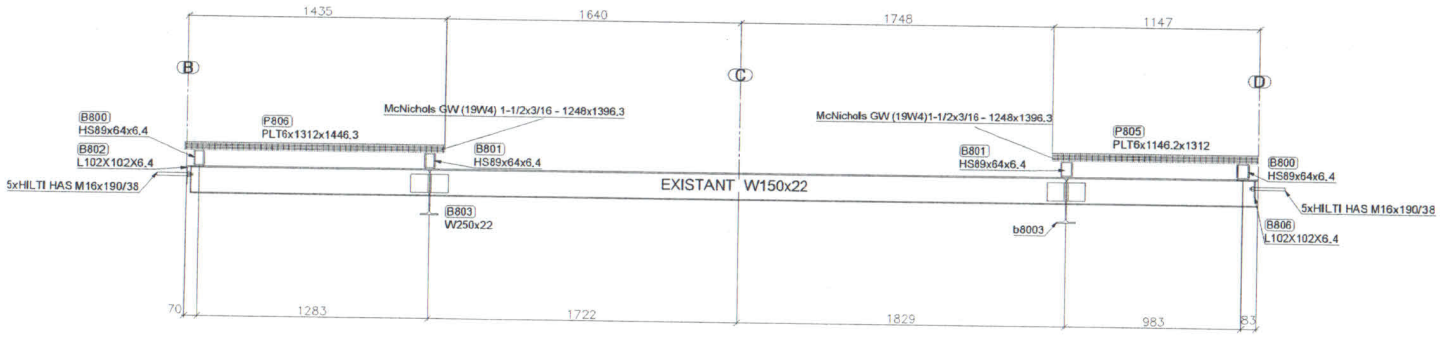

Elevation

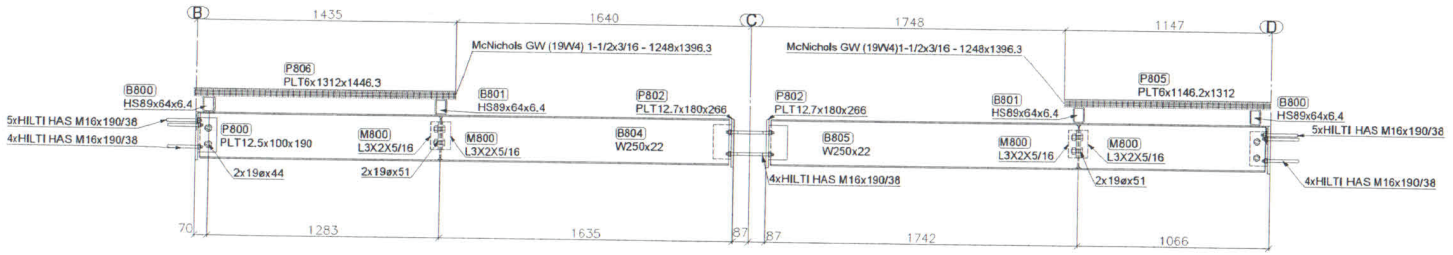

Elevation

PROJE IQALUIT

WAEWATER TREATMENT

LANT UPGRADE

DECTIVE CNN-10

REGISTERED PROFESSIONAL ENGINEER
NT/NU

ALL WELDING PLAN AND WHAT WERE MADE SOUS ALL COMPLIES CWB

Rev.	Date	Par	Description

STRUCTURES M.H. inc.
ENTREPRENEUR GÉNÉRAL
Tél. :
Télécopieur : 418 648-9235
RQ : 5612-0215-01

Date : 2019-

INGÉNIEUR EN TRUDEAU

Client
DUK CONST.

Projet
CONI THANK OPENING

No. Projet :
2018.0840_ST

Détaillé par
DISE HARVEY

TITRE :
V ELEVATION
CON- THANK OPENING

Soudure : EXXXE
Trou : XX 6" Poin
Acier : 300W,SDK/CSA-G40.21M-350W
Peinture Aucun,Galvan

No.feuille :
2-2

Issuance
0

Marque	Quantité	Description	Longueur	Nuance	Finition	Poids	Poids total
B800	2	Poutre					
b8001	2	HS89x64x6.4	1198.0	G40.21M-350W	Galvanisé	34.863	69.726
	2					34.863	69.726
	2						69.726

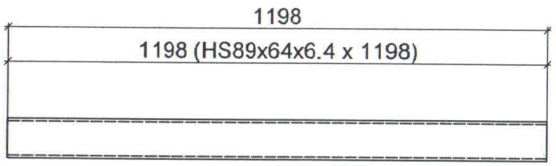

2 - B800 HS89x64x6.4

d=89 b=64 t=6 w=6 k=

Grid reference (/B), (/D)

REGISTERED PROFESSIONAL ENGINEER
NT/NU

CWB
certificationcwb
CSA W47.1

ALL WELDING
PLAN AND WHAT
WERE MADE
SOUS ALL COMPLIES
CWB

Rev.	Date	Par	Description

Projet : CCN-010 THANK OPENNIG

No. Projet : MH.2018.0840_ST

Statut :	Commentaire :	
Détaillé par : MOISE HARVEY	Trou : 13/16"Ø u/n	Client : KUDLIK CONST.
Vérifié par: JEAN TRUDEAU	Soudure : E70XXELECT	No. Dessin : B800
STRUCTURES M.H. inc. ENTREPRENEUR GÉNÉRAL	Acier : G40.21M-350W	
	Peinture: Galvanisé	Sequence : 0
	Date : 2019-02-19	

Quantité | Description | Longueur | Finition

Marque	Quantité	Description	Longueur	Nuance	Finition	Poids	Poids total
B801	2	Poutre					
b8000	2	HS89x64x6.4	1208.2	G40.21M-350W	Galvanisé	35.160	70.320
	2					35.160	70.320
	2						70.320

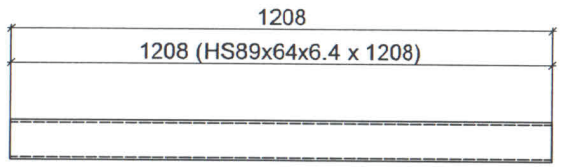

2 - B801 HS89x64x6.4

d=89 b=64 t=6 w=6 k=

Grid reference (/), (/)

REGISTERED PROFESSIONAL ENGINEER
TRUDEAU
20/02/19.
NT/NU

ALL WELDING
PLAN AND WHAT
WERE MADE
SOUS ALL COMPLIES
CWB

certificationcwb
CSA W47.1

Rev.	Date	Par	Description

Projet : CCN-010 THANK OPENNIG

No. Projet : MH.2018.0840_ST

Statut :	Commentaire :	
Détaillé par : MOISE HARVEY	Trou : 13/16"Ø u/n	Client: TUDLIK CONS.
Vérifié par: JEAN TRUDEAU	Soudure : E70XXELECT	No. Dessin : B801
STRUCTURES M.H. inc. ENTREPRENEUR GÉNÉRAL	Acier : G40.21M-350W	
	Peinture: Galvanisé	Sequence :
	Date : 2019-02-19	

Quantité	Description	Longueur	Finition

Marque	Quantité	Description	Longueur	Nuance	Finition	Poids	Poids total
B802	1						
b8002	1	L102X102X6.4	1198.0	300W	Galvanisé	26.015	26.015
	1					26.015	26.015
	1						26.015

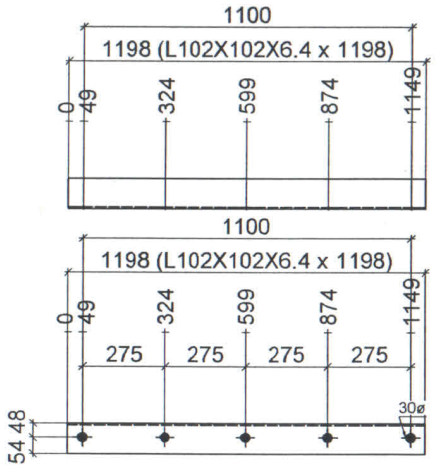

1 - B802 L102X102X6.4
Grid reference (/B)

REGISTERED PROFESSIONAL ENGINEER
NT/NU
20/02/19

CWB
certificationcwb
CSA W47.1

ALL WELDING
PLAN AND WHAT
WERE MADE
SOUS ALL COMPLIES
CWB

Rev.	Date	Par	Description

Projet : CCN-010 THANK OPENNIG
No. Projet : MH.2018.0840_ST

Statut :	Commentaire :	
Détaillé par : MOISE HARVEY	Trou : 13/16"Ø u/n	Client: UDLIK CONST.
Vérifié par: JEAN TRUDEAU	Soudure : E70XXELECT	No. Dessin : B802
STRUCTURES M.H. inc. ENTREPRENEUR GÉNÉRAL	Acier : 300W	
	Peinture: Galvanisé	Sequence : 0
	Date : 2019-02-19	

Marque	Quantité	Description	Longueur	Nuance	Finition	Poids	Poids total
B803	1	Poutre					
b8003	1	W250x22	1268.8	350W		61.539	61.539
m8000	2	L102X102X7.9	101.0	G40.21		2.694	5.389
	3					66.927	66.927
	3						66.927

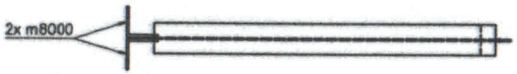

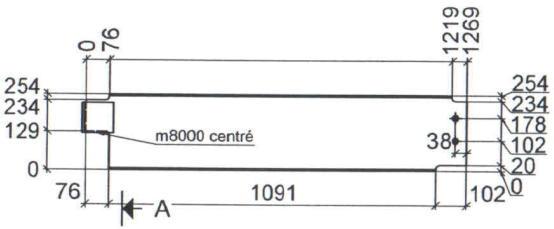

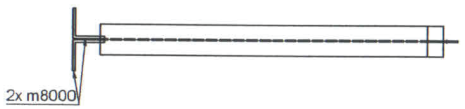

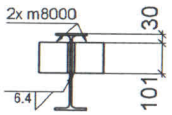

Section A - A

1 - B803 W250x22

d=254 b=102 t=7 w=6 k=20

Grid reference (/)

REGISTERED PROFESSIONAL ENGINEER
NT/NU

CWB
certificationcwb
CSA W47.1

ALL WELDING
PLAN AND WHAT
WERE MADE
SOUS ALL COMPLIES
CWB

Rev.	Date	Par	Description

Projet : CCN-010 THANK OPENNIG

No. Projet : MH.2018.0840_ST

Statut :

Commentaire :

Détaillé par : MOISE HARVEY

Vérifié par: JEAN TRUDEAU

Trou : 13/16"Ø u/n

Soudure : E70XXELECT

Acier : 350W

Peinture: Aucun

Date : 2019-02-19

Client: UDLIK CONST.

No. Dessin : E803

Sequence : 0

STRUCTURES M.H. inc. ENTREPRENEUR GÉNÉRAL

Marque	Quantité	Description	Longueur	Nuance	Finition	Poids	Poids total
B804	1	Poutre					
b8004	1	W250x22	2938.0	350W	Galvanisé	142.498	142.498
	1					142.498	142.498
	1						142.498

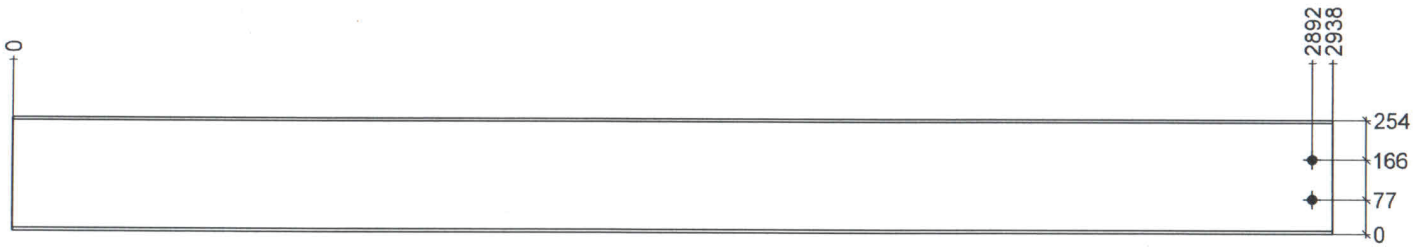

1 - B804 W250x22

d=254 b=102 t=7 w=6 k=20

Grid reference (B/)/(C/)

ALL WELDING
PLAN AND WHAT
WERE MADE
SOUS ALL COMPLIES
CWB

REGISTERED PROFESSIONAL ENGINEER
JEAN TRUDEAU
LICENSE
NT/NU

Rev.	Date	Par	Description

Projet : CCN-010 THANK OPENNIG

No. Projet : MH.2018.0840_ST

Statut :	Commentaire :	
Détaillé par : MOISE HARVEY	Trou : 13/16"Ø u/n	Client: UDUK CONST.
Vérifié par: JEAN TRUDEAU	Soudure : E70XXELECT	No. Dessin : B804
STRUCTURES M.H. inc. ENTREPRENEUR GÉNÉRAL	Acier : 350W	
	Peinture: Galvanisé	Sequence 0
	Date : 2019-02-19	

Marque	Quantité	Description	Longueur	Nuance	Finition	Poids	Poids total
B805	1	Poutre					
b8005	1	W250x22	2758.0	350W	Galvanisé	133.768	133.768
	1					133.768	133.768
	1						133.768

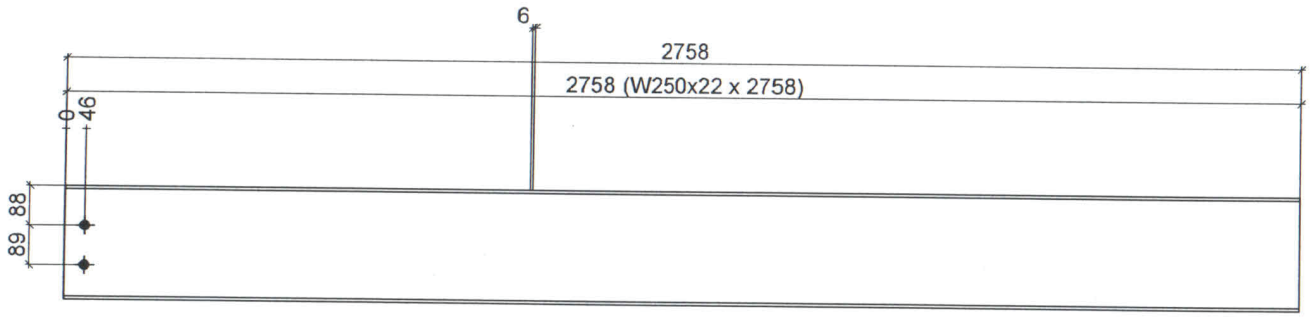

1 - B805 W250x22

d=254 b=102 t=7 w=6 k=20

Grid reference (C/)/(D/)

ALL WELDING
PLAN AND WHAT
WERE MADE
SOUS ALL COMPLIES
CWB

REGISTERED PROFESSIONAL ENGINEER
20/02/19
NT/NU

Rev.	Date	Par	Description

Projet : CCN-010 THANK OPENNIG
No. Projet : MH.2018.0840_ST

Statut :	Commentaire :	
Détaillé par : MOISE HARVEY	Vou : 13/16"Ø u/n	Client: UDLIK CONST.
Vérifié par: JEAN TRUDEAU	Soudure : E70XXELECT	No. Dessin : B805
	Acier : 350W	
	Peinture: Galvanisé	Sequence : 0
	Date : 2019-02-19	

STRUCTURES M.H. inc. ENTREPRENEUR GÉNÉRAL

Marque	Quantité	Description	Longueur	Nuance	Finition	Poids	Poids total
B806	1						
b8006	1	L102X102X6.4	1198.0	300W	Galvanisé	26.015	26.015
	1					26.015	26.015
	1						26.015

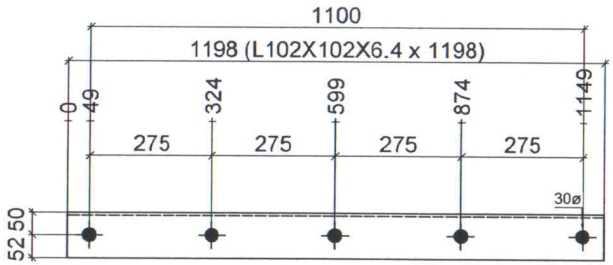

1 - B806 L102X102X6.4
Grid reference (/D)

ALL WELDING
PLAN AND WHAT
WERE MADE
SOUS ALL COMPLIES
CWB

Rev.	Date	Par	Description

Projet : CCN-010 THANK OPENNIG
No. Projet : MH.2018.0840_ST

Statut :	Commentaire :	
Détaillé par : MOISE HARVEY	Trou : 13/16"Ø u/n	Client: UDLIK CONST.
Vérifié par: JEAN TRUDEAU	Soudure : E70XXELECT	No. Dessin : B806
	Acier : 300W	
	Peinture: Galvanisé	Sequence : 0
	Date : 2019-02-19	

REGISTERED PROFESSIONAL ENGINEER
NT/NU

Marque	Quantité	Description	Longueur	Nuance	Finition	Poids	Poids total
M800	4	Cornière d'angle					
m8001	4	L3X2X5/16	152.4	G40.21		2.500	10.000
	4					2.500	10.000
	4						10.000

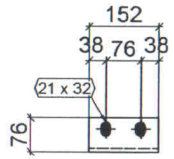

4 - M800 L3X2X5/16

ALL WELDING
PLAN AND WHAT
WERE MADE
SOUS ALL COMPLIES
CWB

Rev.	Date	Par	Description

Projet : CCN-010 THANK OPENNIG
No. Projet : MH.2018.0840_ST

Statut :	Commentaire :	
Détaillé par : MOISE HARVEY	Trou : 13/16"Ø u/n	Client UDLIK CONST.
Vérifié par: JEAN TRUDEAU	Soudure : E70XXELECT	No. Dessin : M800
	Acier : G40.21	
	Peinture: Aucun	Sequence : 0
	Date : 2019-02-19	

REGISTERED PROFESSIONAL ENGINEER
20/02/19
NT/NU

Marque	Quantité	Description	Longueur	Nuance	Finition	Poids	Poids total
P800	2						
p8000	2	PLT12.5x100x190	190.0	G40.21	Galvanisé	4.110	8.220
	2					4.110	8.220
	2						8.220

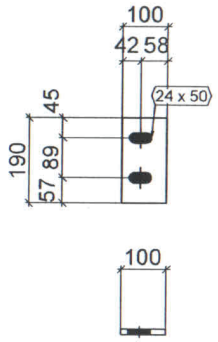

2- P800 PLT12.5x100x190

ALL WELDING
PLAN AND WHAT
WERE MADE
SOUS ALL COMPLIES
CWB

REGISTERED PROFESSIONAL ENGINEER
NT/NU
20/02/19

Rev.	Date	Par	Description

Projet : CCN-010 THANK OPENNIG
No. Projet : MH.2018.0840_ST

Statut :	Commentaire :	
Détaillé par : MOISE HARVEY	Trou : 13/16"Ø un	Client UDLIK CONST.
Vérifié par: JEAN TRUDEAU	Soudure : E70XXELECT	No. Dessin : P800
STRUCTURES M.H. inc. ENTREPRENEUR GÉNÉRAL	Acier : G40.21	
	Peinture: Galvanisé	Sequence : 0
	Date : 2019-02-19	

Quantité	Description	Longueur	Finition
2	TS 1e A325	44	

Marque	Quantité	Description	Longueur	Nuance	Finition	Poids	Poids total
P801	2	Platine d'extrémité					
p8001	2	PLT12.7x180x266	266.0	G40.21	Galvanisé	10.524	21.047
	2					10.524	21.047
	2						21.047

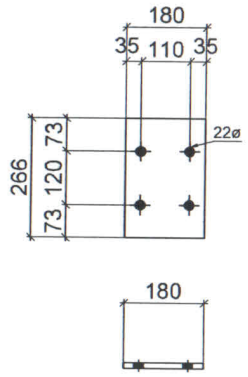

2 - P801 PLT12.7x180x266

REGISTERED PROFESSIONAL ENGINEER
NTNU
20/02/19

CWB
certificationcwb
CSA W47.1

ALL WELDING
PLAN AND WHAT
WERE MADE
SOUS ALL COMPLIES
CWB

Rev.	Date	Par	Description

Projet : CCN-010 THANK OPENNIG
No. Projet : MH.2018.0840_ST

Statut :	Commentaire :	
Détaillé par : MOISE HARVEY	Trou : 13/16"ø u/n	Client: UDLIK CONST.
Vérifié par: JEAN TRUDEAU	Soudure : E70XXELECT	No. Dessin : P801
STRUCTURES M.H. inc. ENTREPRENEUR GÉNÉRAL	Acier : G40.21	
	Peinture: Galvanisé	Sequence : 0
	Date : 2019-02-19	

Quantité | Description | Longueur | Finition

Marque	Quantité	Description	Longueur	Nuance	Finition	Poids	Poids total
P802	2	Platine d'extrémité					
p8001	2	PLT12.7x180x266	266.0	G40.21	Galvanisé	10.524	21.047
p8000	2	PLT12.5x100x190	190.0	G40.21	Galvanisé	4.110	8.220
	4					14.634	29.268
	4						29.268

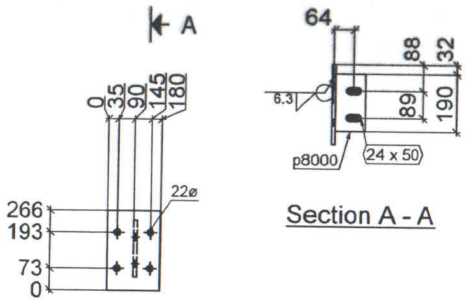

2 - P802 PLT12.7x180x266

REGISTERED PROFESSIONAL ENGINEER
NT/NU

CWB
certificationcwb
CSA W47.1

ALL WELDING PLAN AND WHAT WERE MADE SOUS ALL COMPLIES CWB

Rev.	Date	Par	Description

Projet : CCN-010 THANK OPENNIG
No. Projet : MH.2018.0840_ST

Statut :	Commentaire :	
Détaillé par : MOISE HARV	Trou : 13/16"Ø u/n	Client: UDLIK CONST.
Vérifié par: JEAN TRUDEAU	Soudure : E70XXELECT	No. Dessin : P802
STRUCTURES M.H. inc. ENTREPRENEUR GÉNÉRAL	Acier : G40.21	
	Peinture: Galvanisé	Sequence : 0
	Date : 2019-02-19	

Quantité | Description | Longueur | Finition

Marque	Quantité	Description	Longueur	Nuance	Finition	Poids	Poids total
P803	1	Caillebotis					
p8004	1	McNichols GW (19W4) 1-1/2x3/16 - 1248x1396.3			001	Galvanisé	202.551	202.551
	1					202.551	202.551
	1						202.551

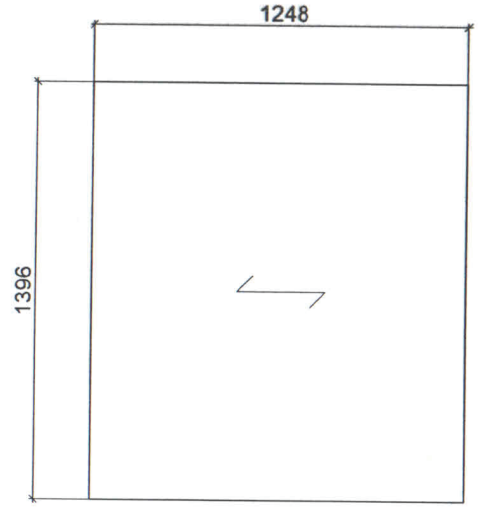

1 - P803 McNichols GW (19W4) 1-1/2x3/16 - 1248x1396.3

REGISTERED PROFESSIONAL ENGINEER
NT/NU

CWB certificationcwb CSA W47.1

ALL WELDING PLAN AND WHAT WERE MADE SOUS ALL COMPLIES CWB

Rev.	Date	Par	Description

Projet : CCN-010 THANK OPENNIG
No. Projet : MH.2018.0840_ST

Statut :	Commentaire :	
Détaillé par : MOISE HARVEY	Trou : 13/16"Ø u/n	Client: UDLIK CONST.
Vérifié par: JEAN TRUDEAU	Soudure : E70XXELECT	No. Dessin : P803
STRUCTURES M.H. inc. ENTREPRENEUR GÉNÉRAL	Acier : A-1001	
	Peinture: Galvanisé	Sequence : 0
	Date : 2019-02-19	

Quantité	Description	Longueur	Finition

Marque	Quantité	Description	Longueur	Nuance	Finition	Poids	Poids total
P804	1	Caillebotis					
p8005	1	McNichols GW (19W4) 1-1/2x3/16 - 1262x1096.2		3001	Galvanisé	160.814	160.814
	1					160.814	160.814
	1						160.814

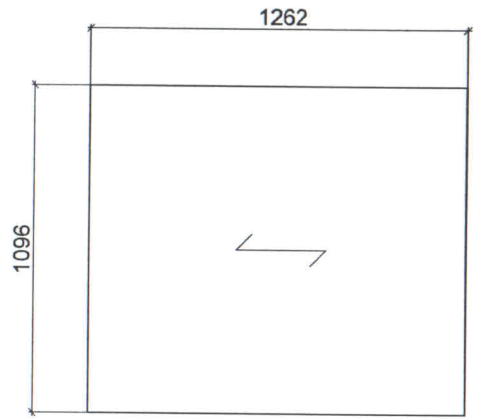

1 - P804 McNichols GW (19W4) 1-1/2x3/16 - 1262x1096.2

REGISTERED PROFESSIONAL ENGINEER
NT/NU

ALL WELDING
PLAN AND WHAT
WERE MADE
SOUS ALL COMPLIES
CWB

Rev.	Date	Par	Description

Projet : CCN-010 THANK OPENNIG
No. Projet : MH.2018.0840_ST

Statut :	Commentaire :	
Détaillé par : MOISE HARVEY	Trou : 13/16"Ø u/n	Client: UDLIK CONST.
Vérifié par: JEAN TRUDEAU	Soudure : E70XXELECT	No. Dessin : P804
STRUCTURES M.H. inc. ENTREPRENEUR GÉNÉRAL	Acier : A-1001	
	Peinture: Galvanisé	Sequence : 0
	Date : 2019-02-19	

Quantité	Description	Longueur	Finition

Marque	Quantité	Description	Longueur	Nuance	Finition	Poids	Poids total
P805	1	Platelage supérieur					
p8002	1	PLT6x1146.2x1312	1312.0	G40.21	Galvanisé	156.159	156.159
	1					156.159	156.159
	1						156.159

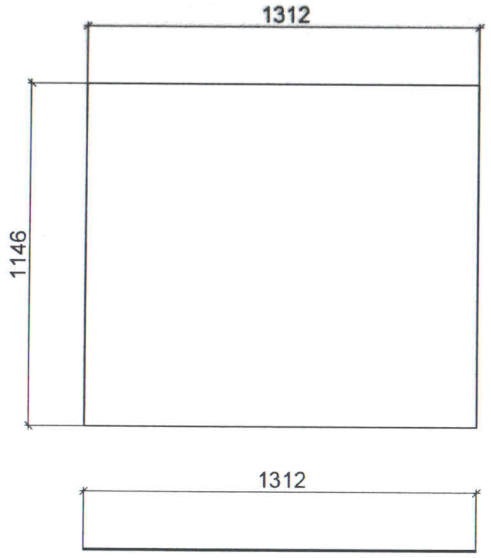

1 - P805 PLT6x1146.2x1312

REGISTERED PROFESSIONAL ENGINEER
NT/NU

CWB
certificationcwb
CSA W47.1

ALL WELDING
PLAN AND WHAT
WERE MADE
SOUS ALL COMPLIES
CWB

Rev.	Date	Par	Description

Projet : CCN-010 THANK OPENNIG
No. Projet : MH.2018.0840_ST

Statut :	Commentaire :	
Détaillé par : MOISE HARVEY	Trou : 13/16"Ø u/n	Client: UDLIK CONST.
Vérifié par: JEAN TRUDEAU	Soudure : E70XXELECT	No. Dessin : P805
STRUCTURES M.H. inc. ENTREPRENEUR GÉNÉRAL	Acier : G40.21	
	Peinture: Galvanisé	Sequence : 0
	Date : 2019-02-19	

Quantité | Description | Longueur | Finition

Marque	Quantité	Description	Longueur	Nuance	Finition	Poids	Poids total
P806	1	Platelage supérieur					
p8003	1	PLT6x1312x1446.3	1446.3	G40.21	Galvanisé	197.030	197.030
	1					197.030	197.030
	1						197.030

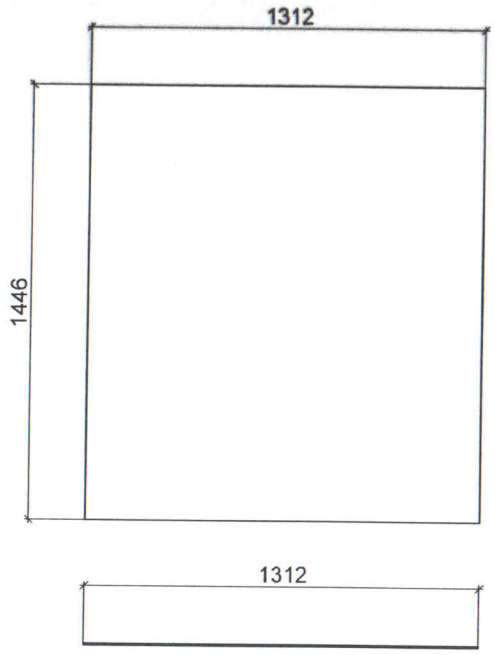

1 - P806 PLT6x1312x1446.3

REGISTERED PROFESSIONAL ENGINEER
20/02/19
NT/NU

CWB
certificationcwb
CSA W47.1

ALL WELDING
PLAN AND WHAT
WERE MADE
SOUS ALL COMPLIES
CWB

Rev.	Date	Par	Description

Projet : CCN-010 THANK OPENNIG
No. Projet : MH.2018.0840_ST

Statut :	Commentaire :	
Détaillé par : MOISE HARVEY	Trou : 13/16"Ø u/n	Client : UDLIK CONST.
Vérifié par: JEAN TRUDEAU	Soudure : E70XXELECT	No. Dessin : P806
STRUCTURES M.H. inc. ENTREPRENEUR GÉNÉRAL	Acier : G40.21	
	Peinture: Galvanisé	Sequence : 0
	Date : 2019-02-19	

Quantité | Description | Longueur | Finition

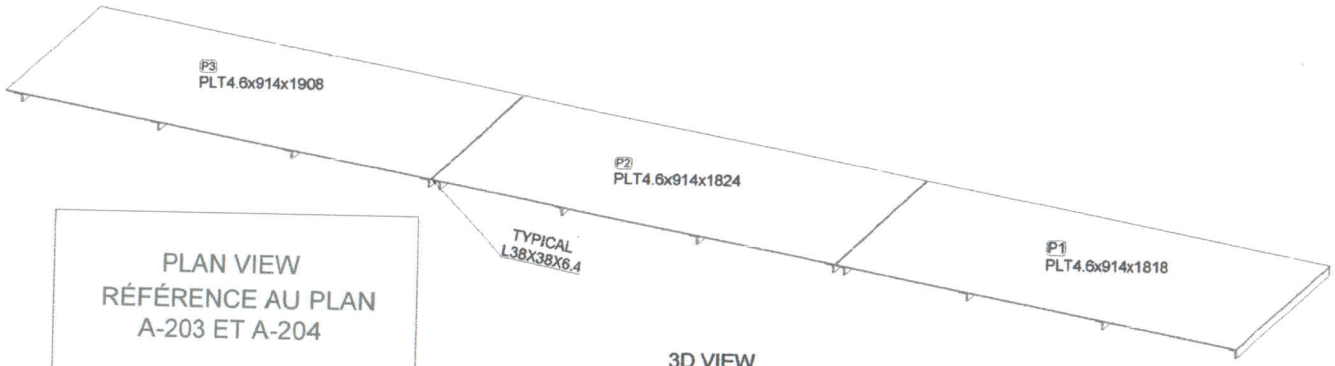

PLAN VIEW
RÉFÉRENCE AU PLAN
A-203 ET A-204

3D VIEW
CHECKER PLATE
EN ACIER GALVANISÉ
SUR L'AXE-2 ENTRE L'AXE B ET D

PROJET :

IQALUIT
WASTEWATER TREATMENT
PLANT

DFA TANK PLATEFORM

-TOUS L'ACIER EST GALVANISÉ
-ALL STEEL IS GALVANIZED

REGISTERED PROFESSIONAL ENGINEER
J. TRUDEAU
07/12/18
NT/NU

ALL WELDING
COMPLIES WITH CWB
STANDARDS

Rev.	Date	Par	Description

STRUCTURES M.H. inc.
ENTREPRENEUR GÉNÉRAL
1670 Av. de la Technologie, Alma GBC 1E9
Téléphone : 418 980-2186 Télécopieur : 418 668-9235
structures.mh@gmail.com
RBQ : 5612-0215-01

Date : 2018-12-06

INGÉNIEUR :

Client :
Kudlik Construction Ltd.

Projet :
New checker plate

No. Projet :
MH.2018.0839

Détaillé par :
Moise Harvey

TITRE :
VIEW 3D CHECKER PLATE

Soudure : EXXXXELECT
Trou : 1/16"Ø ab
Acier : 300W,G40.21
Peinture: Galvanisé

No. Dessin :
ST-00

Séquence : 0

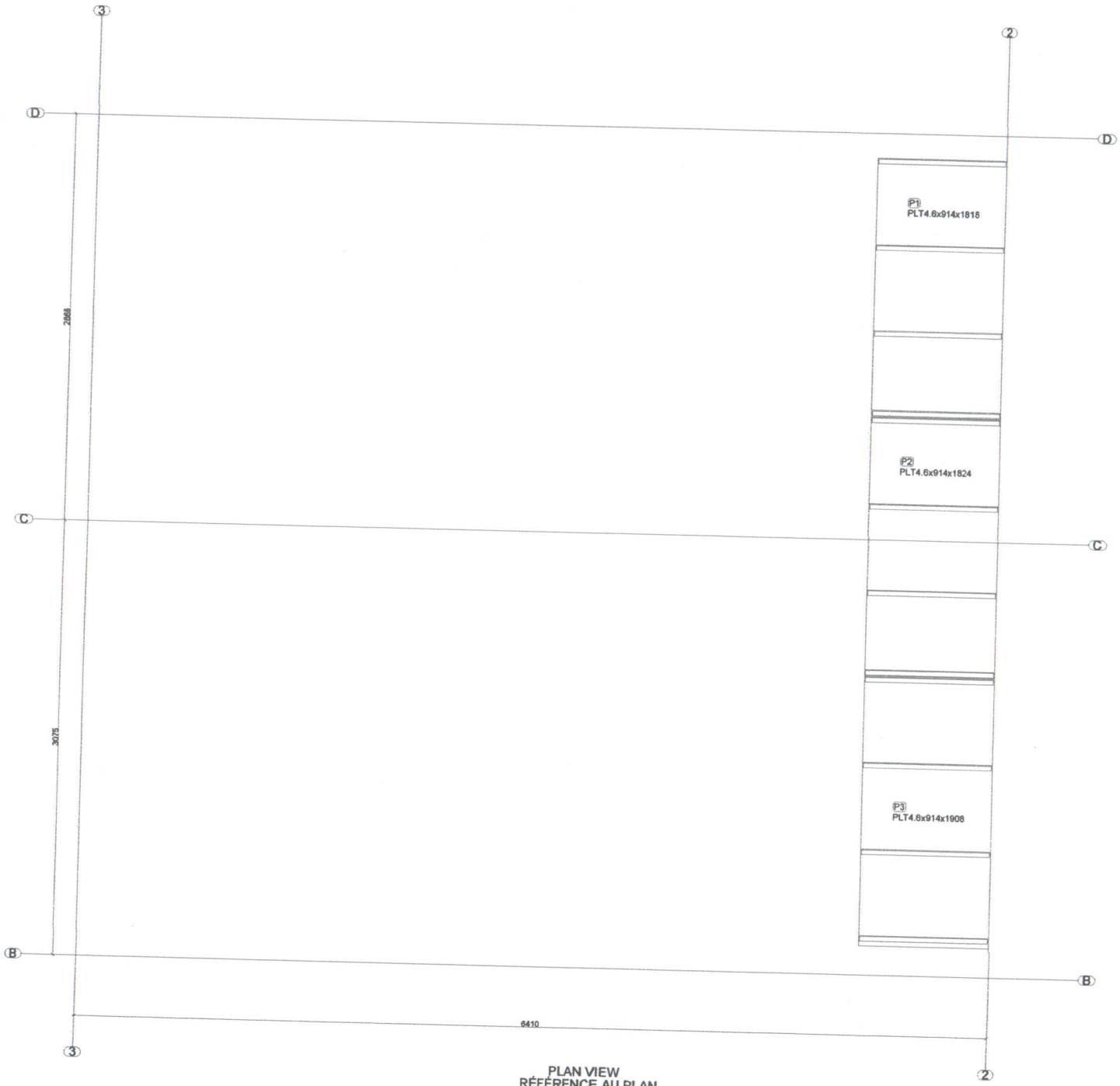

PLAN VIEW
RÉFÉRENCE AU PLAN
A-203 ET A-204

PROJET :

IQALUIT
WASTEWATER TREATMENT
PLANT

DFA TANK PLATEFORM

-TOUS L'ACIER EST GALVANISÉ
-ALL STEEL IS GALVANIZED

REGISTERED PROFESSIONAL ENGINEER
NT/NU
07/12/18

ALL WELDING
COMPLIES WITH CWB
STANDARDS

Rev.	Date	Par	Description

STRUCTURES M.H. inc.
ENTREPRENEUR GÉNÉRAL
670 Av. de la Technologie, Alma G8C 1E9
Téléphone : 418 480-2186 Télécopieur : 418 668-9235
structures.mh@gmail.com
RBQ : 5612-0215-08

Date : 2018-12-06

INGÉNIEUR :

Client :
Kudlik Construction Ltd.

Projet :
New checker plate

No. Projet :
MH.2018.0839

Détaillé par :
Moise Harvey

TITRE :
VIEW 3D CHECKER PLATE

Soudure :	E7G28LECT	No. Dessin :	ST-01
Trou :	1 M14"Ø4		
Acier :	3600X340 21		
Peinture :	Galvanisé	Surprise :	0

Marque	Quantité	Description	Longueur	Nuance	Finition	Poids	Poids total
P1	1						
p1000	1	PLT4.6x914x1818	1818.0	G40.21	Galvanisé	132.282	132.282
b1000	4	L38X38X6.4	902.0	300W	Galvanisé	6.920	27.681
	5					159.963	159.963
	5						159.963

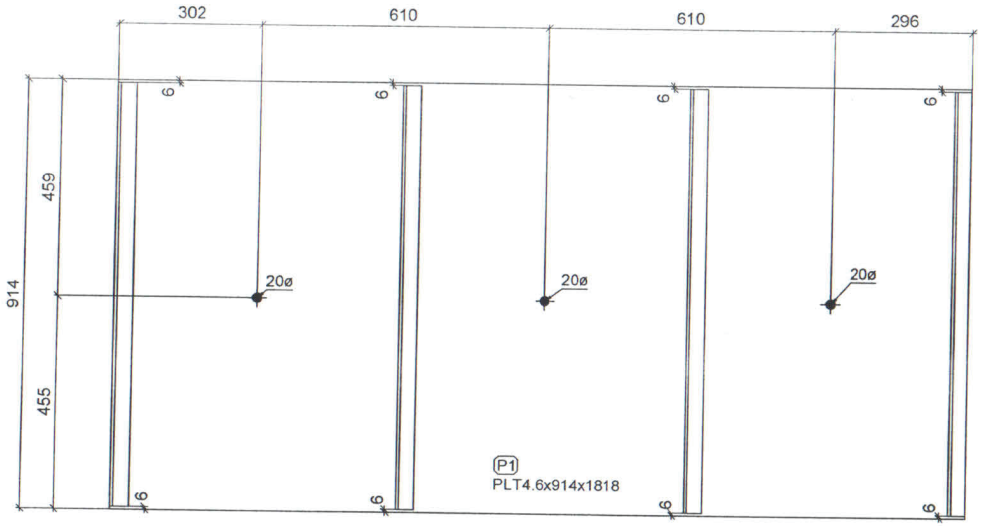

F F

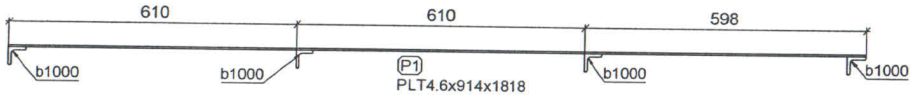

Section F - F

1 - P1 PLT4.6x914x1818

ALL WELDING COMPLIES WITH CWB STANDARDS

certificationcwb CSA W47.1

REGISTERED PROFESSIONAL ENGINEER J. TRUDEAU NT/NU

Rev.	Date	Par	Description

Projet : New checker plate
No. Projet : MH.2018.0839

Statut :	Commentaire :	
Détaillé par : Moise Harvey	Trou : 13/16"Ø u/n	Client : Kudlik Construction Ltd.
Vérifié par: Jean Trudeau	Soudure : E70XXELECT	No. Dessin : P1
STRUCTURES M.H. Inc. ENTREPRENEUR GÉNÉRAL	Acier : G40.21	
	Peinture: Galvanisé	Sequence : 0
	Date : 2018-12-06	

Marque	Quantité	Description	Longueur	Nuance	Finition	Poids	Poids total
P2	1						
p1001	1	PLT4.6x914x1824	1824.0	G40.21	Galvanisé	132.719	132.719
b1000	4	L38X38X6.4	902.0	300W	Galvanisé	6.920	27.681
	5					160.400	160.400
	5						160.400

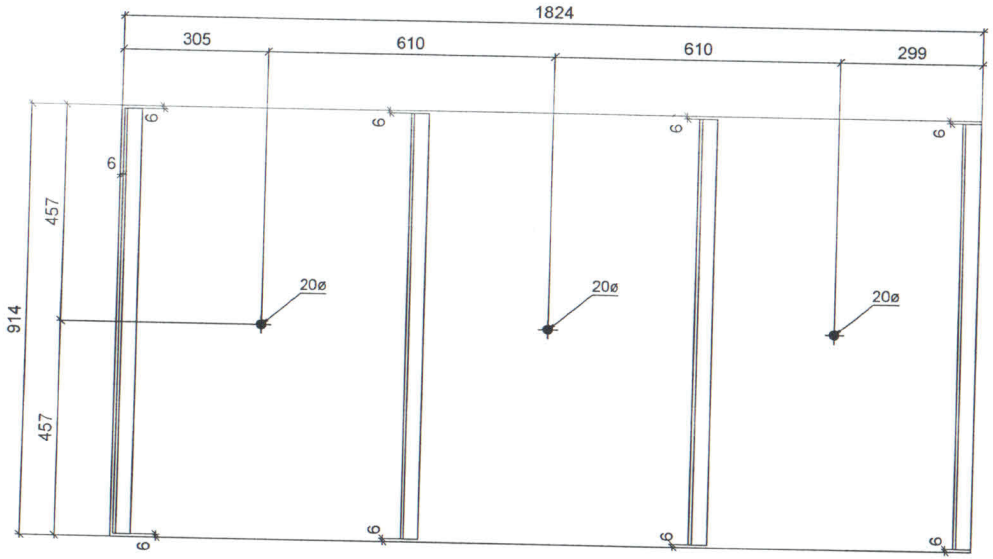

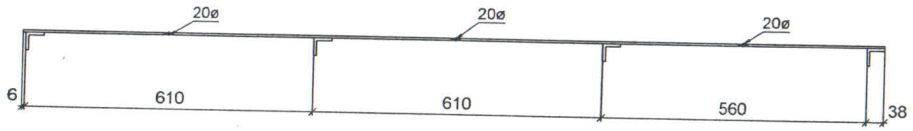

1 - P2 PLT4.6x914x1824

ALL WELDING COMPLIES WITH CWB STANDARDS

certificationcwb CSA W47.1

REGISTERED PROFESSIONAL ENGINEER NT/NU

Rev.	Date	Par	Description

Projet : New checker plate
No. Projet : 0839

Statut :	Commentaire :	
Détaillé par : Moise Harvey	Trou : 13/16"Ø u/n	Client : Kudlik Construction Ltd.
Vérifié par: Jean Trudeau	Soudure : E70XXELECT	No. Dessin : P2
STRUCTURES M.H. inc. ENTREPRENEUR GÉNÉRAL	Acier : G40.21	
	Peinture: Galvanisé	Sequence : 0
	Date : 2018-12-06	

Marque	Quantité	Description	Longueur	Nuance	Finition	Poids	Poids total
P3	1						
p1002	1	PLT4.6x914x1908	1908.0	G40.21	Galvanisé	138.831	138.831
b1000	4	L38X38X6.4	902.0	300W	Galvanisé	6.920	27.681
	5					166.512	166.512
	5						166.512

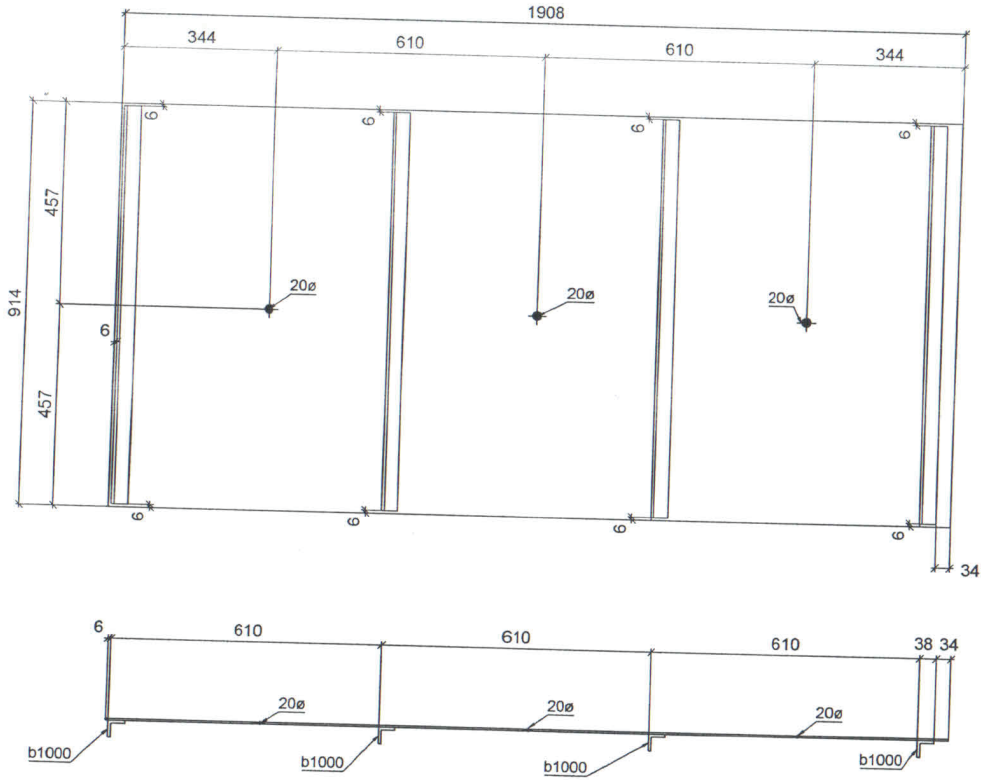

1 - P3 PLT4.6x914x1908

ALL WELDING COMPLIES WITH CWB STANDARDS

Rev.	Date	Par	Description

Projet : New checker plate
No. Projet : MH.2018.0839

Statut :	Commentaire :	
Détaillé par : Moise Harvey	Trou : 13/16"Ø u/n	Client : Kudlik Construction Ltd.
Vérifié par: Jean Trudeau	Soudure : E70XXELECT	No. Dessin : P3
STRUCTURES M.H. inc. ENTREPRENEUR GÉNÉRAL	Acier : G40.21	
	Peinture: Galvanisé	Sequence : 0
	Date : 2018-12-06	

REGISTERED PROFESSIONAL ENGINEER
J.C. TRUDEAU
NT/NU

SUBMITTALS IDENTIFICATION SHEET

PROJECT: Wastewater Treatment Plant Upgrade
Iqaluit, Nunavut

NUNAMI
STANTEC LIMITED

1088C Noble House
Iqaluit NU
www.stantec.com

CONTRACTOR: Kudlik Construction Ltd, Project 2018-062

Telephone: 867-979-1166

E-mail: srousseau@kudlik.biz

SUBCONTRACTOR:

Person responsible

Telephone: E-mail:

PRODUCT SUBMITTED:

☑ As Specified

☐ Alternate

SUPPLIER or MANUFACTURER: Atelier Roy

Person responsible: Martin Bernier

Telephone: 418-629-3384 E-mail:

DESCRIPTION OF SUBMITTAL: Bollards

# of pages:

Reference to drawings:

Reference to specs:

Division: 05 Section: 05 12 23 - 05 21 00

REMARKS:

REVIEW AND COMMENTS (for use by Consultants):

STANTEC PROJECT #: 110126045

SUBMITTAL # Slab supported bollard

This review by Stantec is for general conformance with the design concept of Stantec's design of the:

☐ Architectural ☐ Electrical
☑ Structural ☐ Other
☐ Mechanical

component(s) only and does not mean that Stantec has verified or approves the shop drawing(s). The Contractor remains solely responsible for the shop drawing(s) and this review by Stantec does not relieve the Contractor of the Contractor's responsibility for errors or omissions in the shop drawing(s) or for meeting all requirements of the contract documents. This review does not mean that Stantec approves the detailed design inherent in the shop drawing, responsibility for which shall remain with the Contractor submitting same, nor does this review mean that Stantec accepts any deviation of the shop drawing(s) from the contract documents. The Contractor is responsible for confirming all dimensions and correlating them at the job site, for all construction means, methods and techniques, and for coordination of construction work of all trades, including coordination of all shop drawings.

Stantec

☐ REVIEWED

☑ REVIEWED, AS NOTED

☐ REVISE AND RESUBMIT

☐ NOT REVIEWED

DATE 2019-06-27

BY Petr Polivka

Review of this submission is for compliance with general intent of the contract. This review does not relieve the Sub-Contractor, Supplier or Manufacturer of responsibility for error or omissions in the submission or the responsibility of meeting all requirements of the contract documents. Any deviation from the contract documents initiated by the Sub-Contractor, Supplier or Manufacturer shall be at their sole risk. QUANTITIES AND DETAIL DIMENSIONS ARE THE SUB-CONTRACTORS OR SUPPLIERS RESPONSIBILITY. VERIFY DATA WITH FIELD DIMENSIONS.

SUBMITTAL TRACKING No.: **STC-027**

2019-06-25

FINISH:

- COMMERCIAL BLASTING SSPC-SP6
- 1 COAT OF PRIMER INTERSEAL 670HS, 4-6 MILS DRY, GREY COLOR - CHROMASCAN CODE #71044
- 1 COAT OF YELLOW PAINT ON SITE BY OTHERS

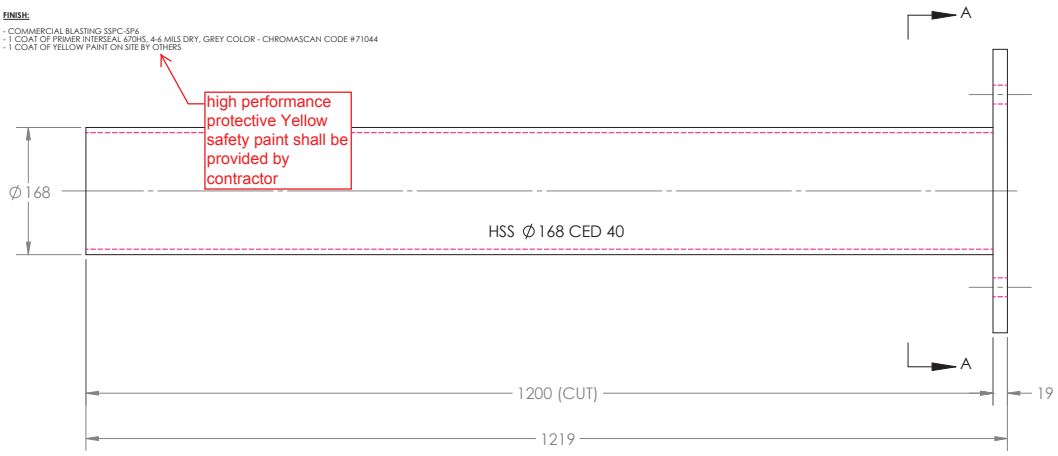

REMOVABLE GUARD POST
REQUIRED: 2

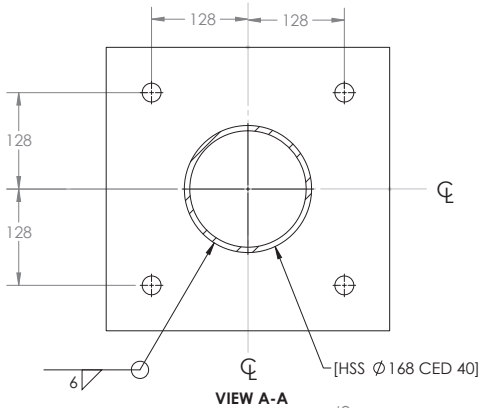

VIEW A-A
SCALE 1 : 5

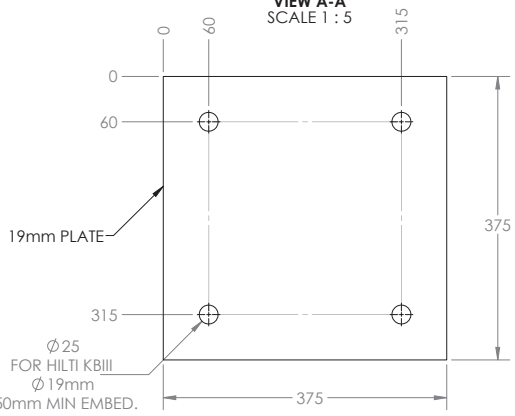

BASE PLATE
REQUIRED: 2

ATELIER DE SOUDURE GILLES ROY INC.	PROJECT: IQALUIT, PILITAK ENTERPRISES LTD, BOLLARDS	CONTRACT NUMBER: 20929	DRAWN BY: M.B. 20/06/19	0	FOR FABRICATION	20/06/2019	SEAL
			CHECKED BY:				DRAWING NUMBER: 20929-001
			UNITS: mm	NO	RÉVISION	DATE	

SUBMITTALS IDENTIFICATION SHEET

PROJECT: Wastewater Treatment Plant Upgrade
Iqaluit, Nunavut

NUNAMI
STANTEC LIMITED
1088C Noble House
Iqaluit NU
www.stantec.com

CONTRACTOR: Kudlik Construction Ltd, Project 2018-062

Telephone: 867-979-1166

E-mail: srousseau@kudlik.biz

SUBCONTRACTOR:

Person responsible:

Telephone: () E-mail:

PRODUCT SUBMITTED:

☑ As Specified

☐ Alternate

SUPPLIER or MANUFACTURER: Givesco

175 st-sacrement Quebec, qc G1N 3X4

Person responsible: Eric Godbout

Telephone: egodbout@givesco.com

DESCRIPTION OF SUBMITTAL: Sikaflex 2c NS

# of pages:

Reference to drawings: S502 detail 2

Reference to specs:

Division: 07 Section: Drawings S502

REMARKS:

REVIEW AND COMMENTS (for use by Consultants):

STANTEC PROJECT #: 110126045 SUBMITTAL # SU-013

This review by Stantec is for general conformance with the design concept of Stantec's design of the:

☑ Architectural ☐ Electrical
☐ Structural ☐ Other
☐ Mechanical

component(s) only and does not mean that Stantec has verified or approves the shop drawing(s). The Contractor remains solely responsible for the shop drawing(s) and this review by Stantec does not relieve the Contractor of the Contractor's responsibility for errors or omissions in the shop drawing(s) or for meeting all requirements of the contract documents. This review does not mean that Stantec approves the detailed design inherent in the shop drawing, responsibility for which shall remain with the Contractor submitting same, nor does this review mean that Stantec accepts any deviation of the shop drawing(s) from the contract documents. The Contractor is responsible for confirming all dimensions and correlating them at the job site, for all construction means, methods and techniques, and for coordination of construction work of all trades, including coordination of all shop drawings.

Stantec

☑ REVIEWED
☐ REVIEWED, AS NOTED
☐ REVISE AND RESUBMIT
☐ NOT REVIEWED

DATE 2018-06-26

BY Jason King

STANTEC PROJECT #: 110126045 SUBMITTAL # SU-013

This review by Stantec is for general conformance with the design concept of Stantec's design of the:

☐ Architectural ☐ Electrical
☑ Structural ☐ Other
☐ Mechanical

component(s) only and does not mean that Stantec has verified or approves the shop drawing(s). The Contractor remains solely responsible for the shop drawing(s) and this review by Stantec does not relieve the Contractor of the Contractor's responsibility for errors or omissions in the shop drawing(s) or for meeting all requirements of the contract documents. This review does not mean that Stantec approves the detailed design inherent in the shop drawing, responsibility for which shall remain with the Contractor submitting same, nor does this review mean that Stantec accepts any deviation of the shop drawing(s) from the contract documents. The Contractor is responsible for confirming all dimensions and correlating them at the job site, for all construction means, methods and techniques, and for coordination of construction work of all trades, including coordination of all shop drawings.

Stantec

☑ REVIEWED
☐ REVIEWED, AS NOTED
☐ REVISE AND RESUBMIT
☐ NOT REVIEWED

DATE 2018-06-26

BY pclyne

Review of this submission is for compliance with general intent of the contract. This review does not relieve the Sub-Contractor, Supplier or Manufacturer of responsibility for error or omissions in the submission or the responsibility of meeting all requirements of the contract documents. Any deviation from the contract documents initiated by the Sub-Contractor, Supplier or Manufacturer shall be at their sole risk. QUANTITIES AND DETAIL DIMENSIONS ARE THE SUB-CONTRACTORS OR SUPPLIERS RESPONSIBILITY. VERIFY DATA WITH FIELD DIMENSIONS.

SUBMITTAL TRACKING No.: **SU-** 13

2018-06-14

BUILDING TRUST
CONSTRUIRE LA CONFIANCE

PRODUCT DATA SHEET
Edition 12.2017/v1
CSC Master Format™ 07 92 13
ELASTOMERIC JOINT SEALANTS

Sikaflex®-2c NS EZ Mix

TWO-COMPONENT, NON-SAG, POLYURETHANE ELASTOMERIC SEALANT

Description

Sikaflex®-2c NS EZ Mix is a two-component, premium-grade, polyurethane-based, elastomeric sealant. It is principally a chemical cure in a non-sag consistency.

Where to Use

- Intended for use in all properly designed working joints with a minimum depth of 6 mm (1/4 in).
- Ideal for vertical and horizontal applications.
- Can be applied at temperatures as low as 4 °C (39 °F).
- Adheres to most substrates commonly found in construction.
- An effective sealant for use in Exterior Insulation Finish Systems (EIFS).
- Submerged environments, such as canal and reservoir joints.

Advantages

- Capable of ± 50 % joint movement.
- Chemical cure allows the sealant to be placed in joints exceeding 13 mm (1/2 in) in depth for non-moving joint.
- High elasticity with a tough, durable, flexible consistency.
- Exceptional cut and tear resistance.
- Exceptional adhesion to most substrates without priming.
- Available in 35 standard architectural colours.
- Colour uniformity assured via Color-pak system.
- Non-sag even in wide joints.
- Easy to mix.
- Paintable with water, oil, and rubber-base paints.
- Sikaflex®-2c Booster available for faster cure in cold weather.
- ANSI/NSF Standard 61 approved for potable water contact (special order Pre-tinted Limestone only).
- Meets ASTM C920, Type M, Grade NS, Class 25, use T, NT, M, G, A, O
- Meets Federal Specification TT-S-00227E, Type II, Class A
- Meets Federal Specification TT-S-001543A
- Meets Federal Specification TT-S-00230C
- Meets CAN/CGSB 19.24 - M90
- USDA approved.
- Canadian Food Inspection Agency acceptance.
- Ministry of Transport Québec acceptance.
- UL certified to CAN/ULC-S115-05: Standard Method of Firestop Systems and to ANSI/UL 2070: Fire Resistance of Building Joint Systems (FF-S-1034, FW-S-1020, HW-S-1018, WW-S-1037) for use in Canada.
- Traffic grade available, see Sikaflex®-2c NS EZ Mix TG Product Data Sheet for specifications.

Technical Data

Packaging	5.7 L and 11.4 L units (1.5 and 3 US gal. units) Color-pak and Sikaflex®-2c Booster sold separately.					
Colours	35 standard architectural colours are available. Special colours available on request.					
Yield	Linear Metre of Sealant per Litre					
Width					**Depth**	
mm (in)	**6 (¼)**	**13 (½)**	**19 (¾)**	**25 (1)**	**32 (1¼)**	**38 (1½)**
6 (¼)	24.8					
13 (½)	12.4	6.2				
19 (¾)	8.3	4.1	2.8			
25 (1)	6.2	3.1	2.1	1.6		
32 (1¼)	5.0	2.5	1.7	1.2	1.0	
38 (1½)	4.1	2.1	1.4	1.0	0.8	0.7
Shelf Life	1 year in original, unopened packaging. Store dry at temperatures between 4 and 35 °C (39 and 95 °F). Condition product between 18 and 24 °C (65 and 75 °F) before using.					

Properties at 23 °C (73 °F) and 50 % R.H.			
Application Temperature	4 to 38 °C (39 to 100 °F), ambient and substrate temperatures. Sealant should be installed when joint is at mid-range of its anticipated movement.		
Service Range	-40 to 77 °C (-40 to 170 °F)		
Curing Rate ASTM C679	Tack-free	8 - 10 hours	
	Final cure	3 days	
Working Time 5.7 L (1.5 US gal.) unit	**4 °C (39 °F)**	**23 °C (73 °F)**	**38 °C (100 °F)**
Sikaflex®-2c NS EZ Mix	6 hours	4 - 6 hours	3 hours
With 1 cold weather Booster	2 - 3 hours	2 hours	1 hour
With 2 cold weather Boosters	1 h 30 min	1 hour	< 1 hour
Tear Strength ASTM D624	7.88 N/mm (45 lb/in)		
Shore A Hardness ASTM D2240	25 ± 5		
Tensile Properties ASTM D412			
Tensile strength at break	0.62 MPa (90 psi)		
Tensile elongation	300 %		
100% modulus	0.48 MPa (70 psi)		
Adhesion in Peel (Fed Spec. TT-S-00227E)			
Substrate	Peel Strength	% Adhesion Loss	
Concrete	> 2.63 N/mm (> 15 lb/in)	Zero	
Weathering Resistance	Excellent		
VOC Content	< 64 g/L		
Chemical Resistance	Good resistance to water, diluted acids, diluted alkalines, and residential sewage. Consult Sika Canada for specific data.		

Product properties are typically averages, obtained under laboratory conditions. Reasonable variations can be expected on-site due to local factors, including environment, preparation, application, curing and test methods.

HOW TO USE

Surface Preparation

All joint surfaces must be clean, sound, dry and frost-free. Joint walls must be free of oils, tar, asphalt, bitumen, grease, paints, coatings, sealers, curing compound residues, and any other foreign matter that might prevent adhesion. Ideally this should be accomplished by mechanical means. Bond breaker tape or backer rod must be used in bottom of joint to prevent bond.

Priming

Priming is typically not necessary. Most substrates only require priming if sealant will be subjected to water immersion after cure. Testing should be done, however, on questionable substrates, to determine if priming is needed. Contact Sika Canada or consult Sikaflex® Primers Product Data Sheet for additional information on priming.
Note: Most Exterior Insulation Finish Systems (EIFS) manufacturers recommend the use of a primer. When EIFS manufacturer specifies a primer or if on-site bond testing indicates a primer is necessary, Sikaflex®-429 Primer is recommended. On-site adhesion testing is recommended with final system prior to the start of a job.

Mixing

Pour entire contents of Component B into pail of Component A. Add entire contents of Color-pak into pail and mix with a low-speed drill (400 - 600 rpm) and proper mixing paddle. Mix for three (3) to five (5) minutes to achieve a uniform colour and consistency. Scrape down sides of pail periodically. Avoid entrapment of air during mixing.

Note: When mixing in cold weather < 10 °C (50 °F), do not force the mixing paddle to the bottom of the pail. After adding Component B and Color-pak into Component A, mix the top 1/2 to 3/4 of the pail during the first minute of mixing. After scraping down the sides of the pail, mix again for another minute. The paddle should reach the bottom of the pail between the first and second minute of mixing. Scrape down the sides of the pail a second time and then mix for an additional two (2) to three (3) minutes until the sealant is well blended. When using Sikaflex®-2c Booster, add entire contents into Component A prior to mixing.

Note: When mixing 11.4 L (3 US gal.) unit, two containers of Component B and two Color-paks must be used. Color-pak must be used with tint base. For pre-pigmented Limestone, just mix with low speed drill and Sikaflex® paddle (no Color-pak needed).

Application

Recommended application temperatures: 4 to 38 °C (39 to 100 °F). Pre-conditioning units to approximately 21 °C (70 °F) is necessary when working at extremes. Move pre-conditioned units to work areas just prior to application.
Apply sealant only to clean, sound, dry, and frost-free substrates. Sikaflex®-2c NS EZ Mix should be applied into joints when joint slot is at mid-point of its designed expansion and contraction.
To place, load directly into bulk gun or use a follower plate loading system. Place nozzle of gun into bottom of joint and fill entire joint. Keeping the nozzle deep in the sealant, continue with a steady flow of sealant preceding nozzle to avoid air entrapment. Also, avoid overlapping of sealant since this also entraps air. Tool as required. Proper joint design for moving joints is 2:1 width to depth ratio, with a recommended 6 mm (1/4 in) minimum and 13 mm (1/2 in) maximum depth of sealant. For non-moving joints, the width to depth ratio can vary. To accelerate the cure of Sikaflex®-2c NS EZ Mix in cold weather temperatures, add Sikaflex®-2c Booster.

Clean Up

Uncured material can be removed from equipment and tools using Sika® Urethane Thinner and Cleaner. Cured material can only be removed manually or mechanically. For removal of uncured material from hands and sensitive surfaces, use Sika® Hand Cleaner towels.

Limitations

- The ultimate performance of Sikaflex®-2c NS EZ Mix, depends on good joint design and proper application.
- Some substrates require priming. Please refer to the Sikaflex® Primers Product Data Sheet or contact Sika Canada.
- Although applying sealants over paints, sealers or coatings is not recommended within the industry, where it cannot be avoided, it is always necessary to test for adhesion. It should also be recognized that the existing paint, sealer or coating will dictate bond values and possibly the integrity of a subsequently applied sealant and thus the performance of the joint.
- Minimum depth in working joint is 6 mm (1/4 in).
- Maximum expansion and contraction should not exceed 50 % of average joint width.
- Avoid contact with materials or surfaces impregnated with, or containing, oil, asphalt, tar or bituminous substances.
- Do not apply or cure in the presence of uncured silicone sealants, alcohol and other solvent cleaners.
- Allow three (3) day cure before subjecting sealant to total water immersion.
- Avoid exposure to high levels of chlorine (Maximum level is 5 ppm).
- Do not apply when moisture vapour transmission exists since this can cause bubbling within the sealant.
- Avoid over-mixing sealant.
- Light colour shades tend to yellow over time when exposed to ultraviolet rays.
- When overcoating, an on-site test is recommended to determine actual compatibility.

Health and Safety Information

For information and advice on the safe handling, storage and disposal of chemical products, users should refer to the most recent SAFETY DATA SHEET containing physical, ecological, toxicological and other safety-related data.

KEEP OUT OF REACH OF CHILDREN
FOR INDUSTRIAL USE ONLY

The Information, and in particular, the recommendations relating to the application and end-use of Sika products, are given in good faith based on Sika's current knowledge and experience of the products when properly stored, handled and applied under normal conditions, within their shelflife. In practice, the differences in materials, substrates and actual site conditions are such that no warranty in respect of merchantability or of fitness for a particular purpose, nor any liability arising out of any legal relationship whatsoever, can be inferred either from this information, or from any recommendations, or from any other advice offered. The information contained herein does not relieve the user of the products from testing them for the intended application and purpose. The proprietary rights of third parties must be observed. All orders are accepted subject to our current terms of sale and delivery. Users must always refer to the most recent issue of the local Product Data Sheet for the product concerned, copies of which will be supplied on request or may be downloaded from our website at: www.sika.ca

SIKA CANADA INC.
Head Office
601, avenue Delmar
Pointe-Claire, Quebec
H9R 4A9

Other locations
Toronto
Edmonton
Vancouver

1-800-933-SIKA
www.sika.ca

Certified ISO 9001 (CERT-0102780)
Certified ISO 14001 (CERT-0102791)

EACH WAY

o/c, EACH WAY

ULAR FILL COMPACTED TO

TURAL GRAVEL FILL

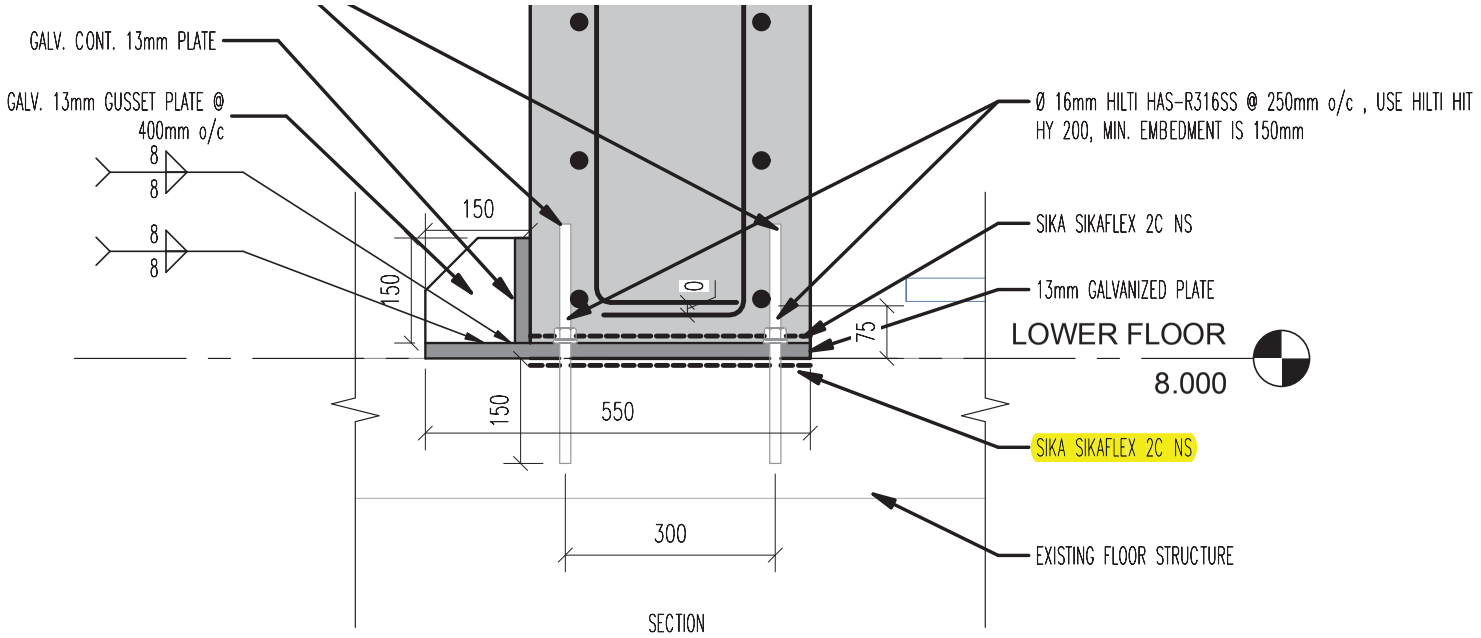

2

S201 | S502

WALL REINFORCEMENT/ANCHORAGE DETAIL

1 : 10

EXTEND HILTI HAS ROD 150MM

SUBMITTALS IDENTIFICATION SHEET

PROJECT: Wastewater Treatment Plant Upgrade
Iqaluit, Nunavut

NUNAMI
STANTEC LIMITED

1088C Noble House
Iqaluit NU
www.stantec.com

CONTRACTOR: Kudlik Construction Ltd, Project 2018-062

Telephone: 867-979-1166

E-mail: srousseau@kudlik.biz

SUBCONTRACTOR:

Person responsible:

Telephone: () E-mail:

PRODUCT SUBMITTED:

☑ As Specified

☐ Alternate

SUPPLIER or MANUFACTURER: Hilti

Person responsible: André Langlois

Telephone: 418-953-1754 E-mail: landre.langlois@hilti.com

DESCRIPTION OF SUBMITTAL: anchorage

# of pages:

Reference to drawings: 2/S502

Reference to specs:

Division: 05 Section:

REMARKS:

REVIEW AND COMMENTS (for use by Consultants):

STANTEC PROJECT #: 110126045 SUBMITTAL # SU-015

This review by Stantec is for general conformance with the design concept of Stantec's design of the:

☐ Architectural ☐ Electrical
☑ Structural ☐ Other
☐ Mechanical

component(s) only and does not mean that Stantec has verified or approves the shop drawing(s). The Contractor remains solely responsible for the shop drawing(s) and this review by Stantec does not relieve the Contractor of the Contractor's responsibility for errors or omissions in the shop drawing(s) or for meeting all requirements of the contract documents. This review does not mean that Stantec approves the detailed design inherent in the shop drawing, responsibility for which shall remain with the Contractor submitting same, nor does this review mean that Stantec accepts any deviation of the shop drawing(s) from the contract documents. The Contractor is responsible for confirming all dimensions and correlating them at the job site, for all construction means, methods and techniques, and for coordination of construction work of all trades, including coordination of all shop drawings.

Stantec

☑ REVIEWED

☐ REVIEWED, AS NOTED

☐ REVISE AND RESUBMIT

☐ NOT REVIEWED

DATE 2018-06-26

BY pclyne

Review of this submission is for compliance with general intent of the contract. This review does not relieve the Sub-Contractor, Supplier or Manufacturer of responsibility for error or omissions in the submission or the responsibility of meeting all requirements of the contract documents. Any deviation from the contract documents initiated by the Sub-Contractor, Supplier or Manufacturer shall be at their sole risk. QUANTITIES AND DETAIL DIMENSIONS ARE THE SUB-CONTRACTORS OR SUPPLIERS RESPONSIBILITY. VERIFY DATA WITH FIELD DIMENSIONS.

SUBMITTAL TRACKING No.: **SU-015**

2018-06-15

8.000

EMENT: 15M @225mm o/c, EACH WAY

ORCEMENT: 15M @225mm o/c, EACH WAY

NG THICKENING

20mm STRUCTURAL GRANULAR FILL COMPACTED TO

NATIVE MATERIAL OR STRUCTURAL GRAVEL FILL
PACTED TO 98% SPMDD.

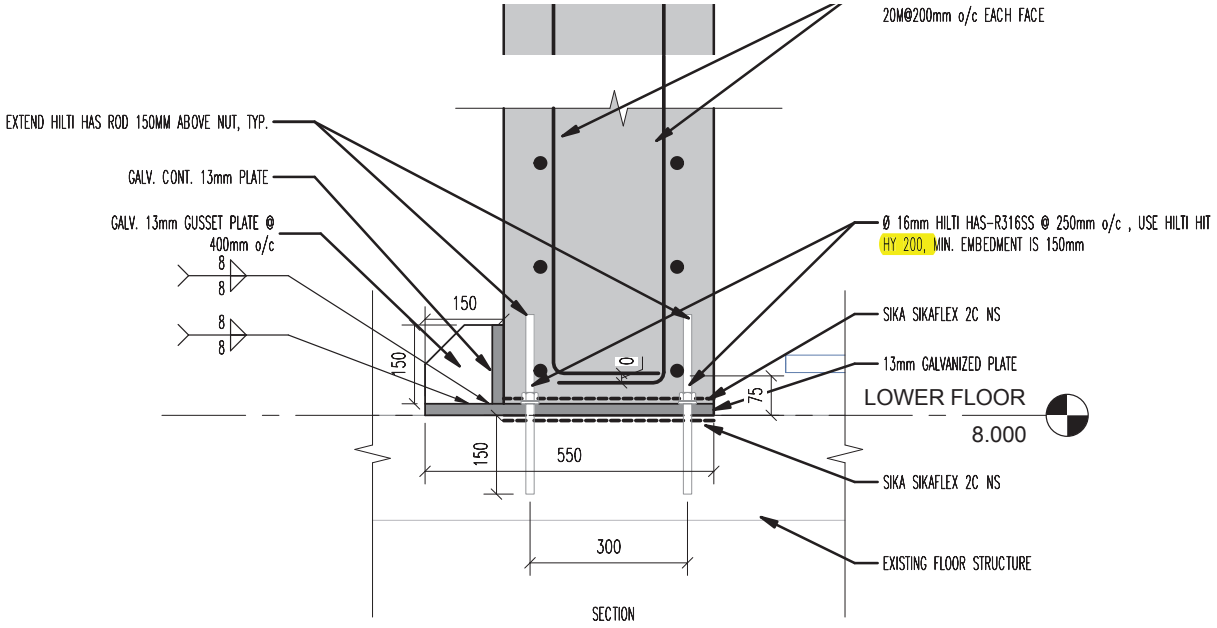

2 S201 S502 WALL REINFORCEMENT/ANCHORAGE DETAIL

1 : 10

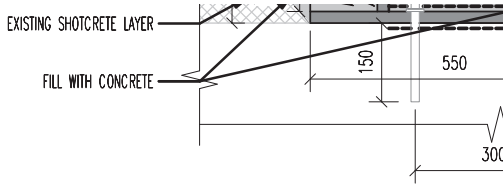

NOTE:
REMOVE OCTAFORM AND CLEAN AND SMOOTH CONCRETE BEFOR

3 S201 S502 WALL/WALL CONNEC

1 : 10

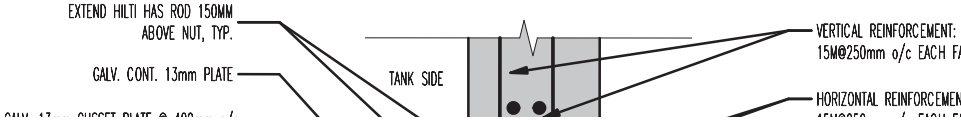

HIT-HY 200
INJECTION MORTAR

Technical Datasheet

Update: May-18

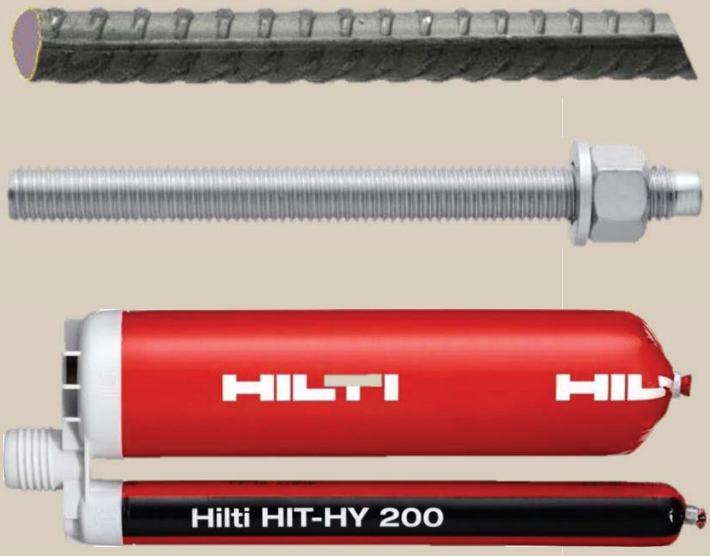

HIT-HY 200 injection mortar

Anchor design (ETAG 001) / Rods&Sleeves / Concrete

Injection mortar system



Hilti HIT- HY 200-A

500 ml foil pack
(also available as
330 ml foil pack)

Hilti HIT- HY 200-R

500 ml foil pack
(also available as
330 ml foil pack)

Anchor rod:
HIT-V
HIT-V-F
HIT-V-R
HIT-V-HCR
(M8-M30)

Internally threaded sleeve:
HIS-N
HIS-RN
(M8-M20)

Anchor rod:
HIT-Z
HIT-Z-F
HIT-Z-R
(M8-M20)

Benefits

- **SafeSet** technology: drilling and borehole cleaning in one step with Hilti hollow drill bit
- Suitable for non-cracked and cracked concrete C 20/25 to C 50/60
- ETA Approved for seismic performance category C1, C2[a)]
- Maximum load performance in cracked concrete and non-cracked concrete
- High corrosion / corrosion resistance[b)]
- Small edge distance and anchor spacing possible
- Manual cleaning for borehole diameter up to 20mm and $h_{ef} \leq 10d$ for non-cracked concrete only
- Two mortar versions: HY 200-R for slow cure applications and HY 200-A for fast cure applications

a) HIS-N internally threaded sleeves not approved for Seismic.
b) High Corrosion resistant rods available only for HIT-V. Corrosion resistant rods available for HIT-V and HIS-N

Base material

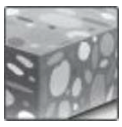
Concrete (non-cracked)

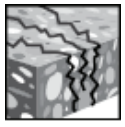
Concrete (cracked)

Installation conditions


Hammer drilled holes


Diamond drilled holes [c)]



Hilti **SafeSet** technology


Variable embedment depth

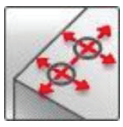
Small edge distance and spacing

Load conditions


Static/ quasi-static


Seismic, ETA-C1, C2[a)]


Fire resistance

Other information


European Technical Assessment


CE conformity



Corrosion resistance[b)]



High corrosion resistance[b)]


PROFIS Anchor design Software

a) HIS-N internally threaded sleeves not approved for Seismic category C2.
b) High Corrosion resistant rods available only for HIT-V. Corrosion resistant rods available for HIT-V and HIS-N
c) Diamond drilling only covered for HIT-Z rods

Approvals / certificates

Description	Authority / Laboratory	No. / date of issue
European technical Assessment a)	DIBt, Berlin	ETA-11/0493/ 2017-07-28 (HY200 A)
European technical Assessment a)	DIBt, Berlin	ETA-12/0006/ 2017-05-30 (HY200 A)
European technical Assessment a)	DIBt, Berlin	ETA-12/0084/ 2017-07-28 (HY200 R)
European technical Assessment a)	DIBt, Berlin	ETA-12/0028/ 2017-05-30 (HY200 R)
Shockproof fastenings in civil defence installations	Federal Office for Civil Protection, Bern	BZS D 13-604 / 2013-12-31 BZS D 13-603 / 2013-12-31
Fire test report	IBMB, Brunswick	3501/676/13 / 2012-08-03

a) All data given in this section according to ETA-11/0493, issue 2017-07-28, ETA-12/0006, issue 2017-05-30, ETA-12/0084, issue 2017-07-28 and ETA-12/0028, issue 2017-05-30

Static and quasi-static resistance (for a single anchor)

All data in this section applies to:

- Correct setting (See setting instruction)
- No edge distance and spacing influence
- *Steel* failure
- Minimum base material thickness
- One typical embedment depth, as specified in the table
- One anchor material, as specified in the tables
- Concrete C 20/25, $f_{ck,cube}$ = 25 N/mm²
- Temperature range I (min. base material temp. -40°C, max. long/short term base material temp.: +24°C/40°C)

For hammer drilled holes, hammer drilled holes with Hilti hollow drill bit:

Anchorage depth 1)

Anchor size		M8	M10	M12	M16	M20	M24	M27	M30
HIT-V									
Embedment depth	[mm]	80	90	110	125	170	210	240	270
Base material thickness	[mm]	110	120	140	161	234	266	300	340
HIS-N									
Embedment depth	[mm]	90	110	125	170	205	-	-	-
Base material thickness	[mm]	120	150	170	230	270	-	-	-
HIT-Z									
Effective anchorage depth2) $h_{ef} = l_{Helix}$	[mm]	50	60	60	96	100	-	-	-
Effective embedment depth3) $h_{ef} = h_{nom,min}$	[mm]	60	60	60	96	100	-	-	-
Base material thickness	[mm]	130	150	170	245	280	-	-	-

1) The allowed range of embedment depth is shown in the setting details.
2) For combined pull-out and concrete cone failure
3) For concrete cone failure

Mean ultimate resistance

Anchor size			M8	M10	M12	M16	M20	M24	M27	M30
Non-cracked concrete										
Tension $N_{R,um}$	HIT-V 5.8	[kN]	*18,9*	*30,5*	*44,1*	*83,0*	*129,2*	*185,9*	*241,5*	*295,1*
	HIS-N 8.8		*26,3*	*48,3*	*70,4*	*131,3*	*121,8*	-	-	-
	HIT-Z a)		*25,2*	*39,9*	*57,8*	*100,8*	*153,3*	-	-	-
Shear $V_{R,um}$	HIT-V 5.8	[kN]	*9,5*	*15,8*	*22,1*	*41,0*	*64,1*	*92,4*	*120,8*	*147,0*
	HIS-N 8.8		*13,7*	*24,2*	*35,7*	*66,2*	*60,9*	-	-	-
	HIT-Z a)		*12,6*	*20,0*	*28,4*	*50,4*	*76,7*	-	-	-
Cracked concrete										
Tension $N_{R,um}$	HIT-V 5.8	[kN]	*18,9*	28,2	*44,1*	66,8	105,9	145,4	177,7	212,0
	HIS-N 8.8		*26,3*	*48,3*	66,8	105,9	*121,8*	-	-	-
	HIT-Z a)		*25,2*	*39,9*	55,1	83,4	115,4	-	-	-
Shear $V_{R,um}$	HIT-V 5.8	[kN]	*9,5*	*15,8*	*22,1*	*41,0*	*64,1*	*92,4*	*120,8*	*147,0*
	HIS-N 8.8		*13,7*	*24,2*	*35,7*	*66,2*	*60,9*	-	-	-
	HIT-Z a)		*12,6*	*20,0*	*28,4*	*50,4*	*76,7*	-	-	-

a) Hilti anchor rod HIT-Z-F: M16 and M20

Characteristic resistance

Anchor size			M8	M10	M12	M16	M20	M24	M27	M30
Non-cracked concrete										
Tension N_{Rk}	HIT-V 5.8	[kN]	*18,0*	*29,0*	*42,0*	70,6	111,9	153,7	187,8	224,0
	HIS-N 8.8		*25,0*	*46,0*	*67,0*	111,9	*116,0*	-	-	-
	HIT-Z [a]		*24,0*	*38,0*	54,3	88,2	122,0	-	-	-
Shear V_{Rk}	HIT-V 5.8	[kN]	*9,0*	*15,0*	*21,0*	*39,0*	*61,0*	*88,0*	*115,0*	*140,0*
	HIS-N 8.8		*13,0*	*23,0*	*34,0*	*63,0*	*58,0*	-	-	-
	HIT-Z [a]		*12,0*	*19,0*	*27,0*	*48,0*	*73,0*	-	-	-
Cracked concrete										
Tension N_{Rk}	HIT-V 5.8	[kN]	15,1	21,2	35,2	50,3	79,8	109,6	133,9	159,7
	HIS-N 8.8		24,7	39,9	50,3	79,8	105,7	-	-	-
	HIT-Z [a]		21,1	30,7	41,5	62,9	86,9	-	-	-
Shear V_{Rk}	HIT-V 5.8	[kN]	*9,0*	*15,0*	*21,0*	*39,0*	*61,0*	*88,0*	*115,0*	*140,0*
	HIS-N 8.8		*13,0*	*23,0*	*34,0*	*63,0*	*58,0*	-	-	-
	HIT-Z [a]		*12,0*	*19,0*	*27,0*	*48,0*	*73,0*	-	-	-

a) Hilti anchor rod HIT-Z-F: M16 and M20

Design resistance

Anchor size			M8	M10	M12	M16	M20	M24	M27	M30
Non-cracked concrete										
Tension N_{Rd}	HIT-V 5.8	[kN]	12,0	19,3	28,0	47,1	74,6	102,5	125,2	149,4
	HIS-N 8.8		16,7	30,7	44,7	74,6	77,3	-	-	-
	HIT-Z [a]		16,0	25,3	36,2	58,8	81,3	-	-	-
Shear V_{Rd}	HIT-V 5.8	[kN]	7,2	12,0	16,8	31,2	48,8	70,4	92,0	112,0
	HIS-N 8.8		10,4	18,4	27,2	50,4	46,4	-	-	-
	HIT-Z [a]		9,6	15,2	21,6	38,4	58,4	-	-	-
Cracked concrete										
Tension N_{Rd}	HIT-V 5.8	[kN]	10,1	14,1	23,5	33,5	53,2	73,0	89,2	106,5
	HIS-N 8.8		16,5	26,6	33,5	53,2	70,4	-	-	-
	HIT-Z [a]		14,1	20,5	27,7	41,9	58,0	-	-	-
Shear V_{Rd}	HIT-V 5.8	[kN]	7,2	12,0	16,8	31,2	48,8	70,4	92,0	112,0
	HIS-N 8.8		10,4	18,4	27,2	50,4	46,4	-	-	-
	HIT-Z [a]		9,6	15,2	21,6	38,4	58,4	-	-	-

a) Hilti anchor rod HIT-Z-F: M16 and M20

Recommended loads [b]

Anchor size			M8	M10	M12	M16	M20	M24	M27	M30
Non-cracked concrete										
Tension N_{Rec}	HIT-V 5.8	[kN]	8,6	13,8	20,0	33,6	53,3	73,2	89,4	106,7
	HIS-N 8.8		11,9	21,9	31,9	53.3	55,2	-	-	-
	HIT-Z [a]		11,4	18,1	25,9	42,0	58,1	-	-	-
Shear V_{Rec}	HIT-V 5.8	[kN]	5,1	8,6	12,0	22,3	34,9	50,3	65,7	80,0
	HIS-N 8.8		7,4	13,1	19,4	36,0	33,1	-	-	-
	HIT-Z [a]		6,9	10,9	15,4	27,4	41,7	-	-	-
Cracked concrete										
Tension N_{Rec}	HIT-V 5.8	[kN]	7,2	10,1	16,8	24,0	38,0	52,2	63,7	76,1
	HIS-N 8.8		11,9	19,8	23,9	38,0	50,3	-	-	-
	HIT-Z [a]		10,0	14,6	19,8	29,9	41,4	-	-	-
Shear V_{Rec}	HIT-V 5.8	[kN]	5,1	8,6	12,0	22,3	34,9	50,3	65,7	80,0
	HIS-N 8.8		7,4	13,1	19,4	36,0	33,1	-	-	-
	HIT-Z [a]		6,9	10,9	15,4	27,4	41,7	-	-	-

a) Hilti anchor rod HIT-Z-F: M16 and M20

b) With overall partial safety factor for action γ = 1,4. The partial safety factors for action depend on the type of loading and shall be taken from national regulations.

Seismic resistance (for a single anchor)

All data in this section applies to:
- Correct setting (See setting instruction with hammer drilling)
- No edge distance and spacing influence
- *Steel* failure
- Minimum base material thickness
- Concrete C 20/25, $f_{ck,cube}$ = 25 N/mm²
- Temperature range I (min. base material temp. -40°C, max. long/short term base material temp.: +24°C/40°C)
- Installation temperature range -10°C to +40°C
- α_{gap} = 1,0 (using Hilti seismic filling set)

For hammer drilled holes and hammer drilled holes with Hilti hollow drill bit:

Anchorage depth for seismic C2

Anchor size			M8	M10	M12	M16	M20	M24	M27	M30
HIT-V										
Embedment depth	h_{ef}	[mm]	-	-	-	125	170	210	-	-
HIT-Z										
Effective anchorage depth [2]	$h_{ef} = l_{Helix}$	[mm]	-	-	60	96	100	-	-	-
Effective embedment depth [3]	h_{ef}	[mm]	-	-	60	96	100	-	-	-
Base material thickness		[mm]	-	-	170	245	280	-	-	-

2) For combined pull-out and concrete cone failure
3) For concrete cone failure

Characteristic resistance in case of seismic performance category C2

Anchor size			M8	M10	M12	M16	M20	M24	M27	M30
Tension $N_{Rk,seis}$	HIT-V 8.8, AM 8.8	[kN]	-	-	-	24,5	45,9	55,4	-	-
	HIT-Z [a]		-	-	29,4	53,4	73,9	-	-	-
Shear $V_{Rk,seis}$	HIT-V 8.8, AM 8.8	[kN]	-	-	-	46,0	77,0	103,0	-	-
	HIT-Z [a]		-	-	*23,0*	*41,0*	*61,0*	-	-	-

a) Hilti anchor rod HIT-Z-F: M16 and M20

Design resistance in case of seismic performance category C2

Anchor size			M8	M10	M12	M16	M20	M24	M27	M30
Tension $N_{Rd,seis}$	HIT-V 8.8, AM 8.8	[kN]	-	-	-	16,3	30,6	36,9	-	-
	HIT-Z [a]		-	-	19,6	35,6	49,3	-	-	-
Shear $V_{Rd,seis}$	HIT-V 8.8, AM 8.8	[kN]	-	-	-	36,8	61,6	82,4	-	-
	HIT-Z [a]		-	-	18,4	32,8	48,8	-	-	-

a) Hilti anchor rod HIT-Z-F: M16 and M20

Anchorage depth for seismic C1

Anchor size			M8	M10	M12	M16	M20	M24	M27	M30
HIT-V										
Embedment depth	h_{ef}	[mm]	-	90	110	125	170	210	240	270
HIT-Z										
Effective anchorage depth [1]	$h_{ef} = l_{Helix}$	[mm]	50	60	60	96	100	-	-	-
Effective embedment depth [2]	h_{ef}	[mm]	60	60	60	96	100	-	-	-
Base material thickness		[mm]	-	-	170	245	280	-	-	-

1) For combined pull-out and concrete cone failure
2) For concrete cone failure

Characteristic resistance in case of seismic performance category C1

Anchor size			M8	M10	M12	M16	M20	M24	M27	M30
Tension $N_{Rk,seis}$	HIT-V 8.8, AM 8.8	[kN]	-	14,7	29,0	42,8	67,8	93,1	113,8	135,8
	HIT-Z [a]; HIT-Z-R		17,9	26,1	35,3	53,4	73,9	-	-	-
Shear $V_{Rk,seis}$	HIT-V 8.8, AM 8.8	[kN]	-	*23,0*	*34,0*	*63,0*	*98,0*	*141,0*	*184,0*	*224,0*
	HIT-Z [a]		*7,0*	*17,0*	*16,0*	*28,0*	*45,0*	-	-	-
	HIT-Z-R		*8,0*	*19,0*	*22,0*	*31,0*	*48,0*	-	-	-

a) Hilti anchor rod HIT-Z-F: M16 and M20

Design resistance in case of seismic performance category C1

Anchor size			M8	M10	M12	M16	M20	M24	M27	M30
Tension $N_{Rd,seis}$	HIT-V 8.8, AM 8.8	[kN]	-	9,8	19,4	28,5	45,2	62,1	75,8	90,5
	HIT-Z [a]; HIT-Z-R		11,9	17,4	23,5	35,6	49,3	-	-	-
Shear $V_{Rd,seis}$	HIT-V 8.8, AM 8.8	[kN]	-	18,4	27,2	50,4	78,4	112,8	147,2	179,2
	HIT-Z [a]		5,6	13,6	12,8	22,4	36,0	-	-	-
	HIT-Z-R		6,4	15,2	17,6	24,8	38,4	-	-	-

a) Hilti anchor rod HIT-Z-F: M16 and M20

Materials

Materials properties for HIT-V

Anchor size			M8	M10	M12	M16	M20	M24	M27	M30
Nominal tensile strength f_{uk}	HIT-V 5.8 (F)	[N/mm²]	500	500	500	500	500	500	500	500
	HIT-V 8.8 (F) AM 8.8 (HDG)		800	800	800	800	800	800	800	800
	HIT-V-R		700	700	700	700	700	700	500	500
	HIT-V-HCR		800	800	800	800	800	700	700	700
Yield strength f_{yk}	HIT-V 5.8 (F)	[N/mm²]	400	400	400	400	400	400	400	400
	HIT-V 8.8 (F) AM 8.8 (HDG)		640	640	640	640	640	640	640	640
	HIT-V-R		450	450	450	450	450	450	210	210
	HIT-V-HCR		640	640	640	640	640	400	400	400
Stressed cross-section A_s	HIT-V	[mm²]	36,6	58,0	84,3	157	245	353	459	561
Moment of resistance W	HIT-V	[mm³]	31,2	62,3	109	277	541	935	1387	1874

Mechanical properties for HIS-N

Anchor size			M8	M10	M12	M16	M20
Nominal tensile strength f_{uk}	HIS-N	[N/mm²]	490	490	460	460	460
	Screw 8.8		800	800	800	800	800
	HIS-RN		700	700	700	700	700
	Screw A4-70		700	700	700	700	700
Yield strength f_{yk}	HIS-N	[N/mm²]	410	410	375	375	375
	Screw 8.8		640	640	640	640	640
	HIS-RN		350	350	350	350	350
	Screw A4-70		450	450	450	450	450
Stressed cross-section A_s	HIS-(R)N	[mm²]	51,5	108,0	169,1	256,1	237,6
	Screw		36,6	58	84,3	157	245
Moment of resistance W	HIS-(R)N	[mm³]	145	430	840	1595	1543
	Screw		31,2	62,3	109	277	541

Mechanical properties for HIT-Z

Anchor size			M8	M10	M12	M16	M20
Nominal tensile strength f_{uk}	HIT-Z(-F) [a]	[N/mm²]	650	650	650	610	595
	HIT-Z-R		650	650	650	610	595
Yield strength f_{yk}	HIT-Z(-F) [a]	[N/mm²]	520	520	520	490	480
	HIT-Z-R		520	520	520	490	480
Stressed cross-section of thread A_s	HIT-Z(-F) [a] HIT-Z-R	[mm²]	36,6	58,0	84,3	157	245
Moment of resistance W	HIT-Z(-F) [a] HIT-Z-R	[mm³]	31,9	62,5	109,7	278	542

a) Hilti anchor rod HIT-Z-F: M16 and M20

Material quality for HIT-V

Part	Material
Zinc coated steel	
Threaded rod, HIT-V 5.8 (F)	Strength class 5.8; Elongation at fracture A5 > 8% ductile Electroplated zinc coated ≥ 5μm; (F) hot dip galvanized ≥ 45 μm
Threaded rod, HIT-V 8.8 (F)	Strength class 8.8; Elongation at fracture A5 > 12% ductile Electroplated zinc coated ≥ 5μm; (F) hot dip galvanized ≥ 45 μm
Hilti Meter rod, AM 8.8 (HDG)	Strength class 8.8; Elongation at fracture A5 > 12% ductile Electroplated zinc coated ≥ 5μm (HDG) hot dip galvanized ≥ 45 μm
Washer	Electroplated zinc coated ≥ 5 μm, hot dip galvanized ≥ 45 μm
Nut	Strength class of nut adapted to strength class of threaded rod. Electroplated zinc coated ≥ 5μm, hot dip galvanized ≥ 45 μm
Hilti Filling set (F)	Filling washer: Electroplated zinc coated ≥ 5 μm / (F) Hot dip galvanized ≥ 45 μm
	Spherical washer: Electroplated zinc coated ≥ 5 μm / (F) Hot dip galvanized ≥ 45 μm
	Lock nut: Electroplated zinc coated ≥ 5 μm / (F) Hot dip galvanized ≥ 45 μm
Stainless Steel	
Threaded rod, HIT-V-R	Strength class 70 for ≤ M24 and strength class 50 for > M24; Elongation at fracture A5 > 8% ductile Stainless steel 1.4401; 1.4404; 1.4578; 1.4571; 1.4439; 1.4362
Washer	Stainless steel 1.4401, 1.4404, 1.4578, 1.4571, 1.4439, 1.4362 EN 10088-1:2014
Nut	Stainless steel 1.4401, 1.4404, 1.4578, 1.4571, 1.4439, 1.4362 EN 10088-1:2014
High corrosion resistant steel	
Threaded rod, HIT-V-HCR	Strength class 80 for ≤ M20 and class 70 for > M20, Elongation at fracture A5 > 8% ductile High corrosion resistance steel 1.4529; 1.4565;
Washer	High corrosion resistant steel 1.4529, 1.4565 EN 10088-1:2014
Nut	High corrosion resistant steel 1.4529, 1.4565 EN 10088-1:2014

Material quality for HIS-N

Part		Material
HIS-N	Int. threaded sleeve	Electroplated zinc coated ≥ 5 μm
	Screw 8.8	Strength class 8.8, A5 > 8 % Ductile; Steel galvanized ≥ 5 μm
HIS-RN	Int. threaded sleeve	Stainless steel 1.4401,1.4571
	Screw 70	Strength class 70, A5 > 8 % Ductile; Stainless steel 1.4401; 1.4404, 1.4578; 1.4571; 1.4439; 1.4362

Material quality for HIT-Z

Part	Material
Threaded rod HIT-Z	Elongation at fracture > 8% ductile; Electroplated zinc coated ≥ 5 μm
Washer	Electroplated zinc coated ≥ 5 μm
Nut	Strength class of nut adapted to strength class of anchor rod. Electroplated zinc coated ≥ 5 μm
HIT-Z-F	Elongation at fracture > 8% ductile Multilayer coating, ZnNi-galvanized according to DIN 50979:2008-07
Washer	Multilayer coating, ZnNi-galvanized according to DIN 50979:2008-07
Nut	Multilayer coating, ZnNi-galvanized according to DIN 50979:2008-07
HIT-Z-R	Elongation at fracture > 8% ductile; Stainless steel 1.4401, 1.4404 EN 10088-1:2014
Washer	Stainless steel A4 according to EN 10088-1:2014
Nut	Strength class of nut adapted to strength class of anchor rod. Stainless steel 1.4401, 1.4404 EN 10088-1:2014

Setting information

In service temperature range

Hilti HIT-HY 200 A (R) injection mortar with anchor rod HIT-V / HIS-(R)N may be applied in the temperature ranges given below. An elevated base material temperature leads to a reduction of the design bond resistance.

Temperature in the base material

Temperature range	Base material temperature	Maximum long term base material temperature	Maximum short term base material temperature
Temperature range I	-40 °C to +40 °C	+24 °C	+40 °C
Temperature range II	-40 °C to +80 °C	+50 °C	+80 °C
Temperature range III	-40 °C to +120 °C	+72 °C	+120 °C

Max short term base material temperature
Short-term elevated base material temperatures are those that occur over brief intervals, e.g. as a result of diurnal cycling.

Max long term base material temperature
Long-term elevated base material temperatures are roughly constant over significant periods of time.

Curing and working time

Temperature of the base material	HIT-HY 200-A		HIT-HY 200-R	
	Maximum working time t_{work}	Minimum curing time t_{cure}	Maximum working time t_{work}	minimum curing time t_{cure}
- 10°C < T_{BM} ≤ - 5°C	1,5 h	7 h	3 h	20 h
- 5°C < T_{BM} ≤ 0°C	50 min	4 h	2 h	8 h
0°C < T_{BM} ≤ 5°C	25 min	2 hour	1 h	4 h
5°C < T_{BM} ≤ 10°C	15 min	75 min	40 min	2,5 h
10°C < T_{BM} ≤ 20°C	7 min	45 min	15 min	1,5 h
20°C < T_{BM} ≤ 30°C	4 min	30 min	9 min	1 h
30°C < T_{BM} ≤ 40°C	3 min	30 min	6 min	1 h

Setting details for HIT-V

Anchor size			M8	M10	M12	M16	M20	M24	M27	M30
Nominal diameter of drill bit	d	[mm]	10	12	14	18	22	28	30	35
Eff. embedment depth and drill hole depth a)	$h_{ef,min}$	[mm]	60	60	70	80	90	96	108	120
	$h_{ef,max}$	[mm]	160	200	240	320	400	480	540	600
Minimum base material thickness	h_{min}	[mm]	h_{ef} + 30 mm ≥100 mm			h_{ef} + 2 d_0				
Maximum diameter of clearance hole in the fixture	d_f	[mm]	9	12	14	18	22	26	30	33
Thickness of Hilti filling set	h_{fs}	[mm]	-	-	-	11	13	15	-	-
Effective fixture thickness with Hilti filling set	$t_{fix,eff}$	[mm]	$t_{fix,eff}$ - h_{fs}							
Max. torque moment b)	T_{max}	[Nm]	10	20	40	80	150	200	270	300
Minimum spacing	s_{min}	[mm]	40	50	60	75	90	115	120	140
Minimum edge distance	c_{min}	[mm]	40	45	45	50	55	60	75	80
Critical spacing for splitting failure	$s_{cr,sp}$	[mm]	2 $c_{cr,sp}$							
Critical edge distance for splitting failure c)	$c_{cr,sp}$	[mm]	**1,0 · h_{ef}**	for h / h_{ef} ≥ 2,00				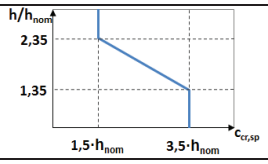		
			4,6 h_{ef} – 1,8 h	for 2,00 > h / h_{ef} > 1,3						
			2,26 h_{ef}	for h / h_{ef} ≤ 1,3						
Critical spacing for concrete cone failure	$s_{cr,N}$	[mm]	2 $C_{cr,sp}$							
Critical edge distance for concrete cone failure d)	$c_{cr,N}$	[mm]	1,5 h_{ef}							

For spacing (edge distance) smaller than critical spacing (critical edge distance) the design loads have to be reduced.

a) $h_{ef,min} \le h_{ef} \le h_{ef,max}$ (h_{ef}: embedment depth)

b) Maximum recommended torque moment to avoid splitting failure during instalation with minimum spacing and edge distance

c) h: base material thickness ($h \ge h_{min}$)

d) The critical edge distance for concrete cone failure depends on the embedment depth h_{ef} and the design bond resistance. The simplified formula given in this table is on the save side.

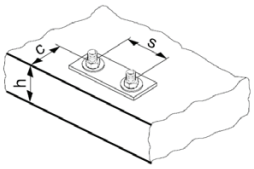

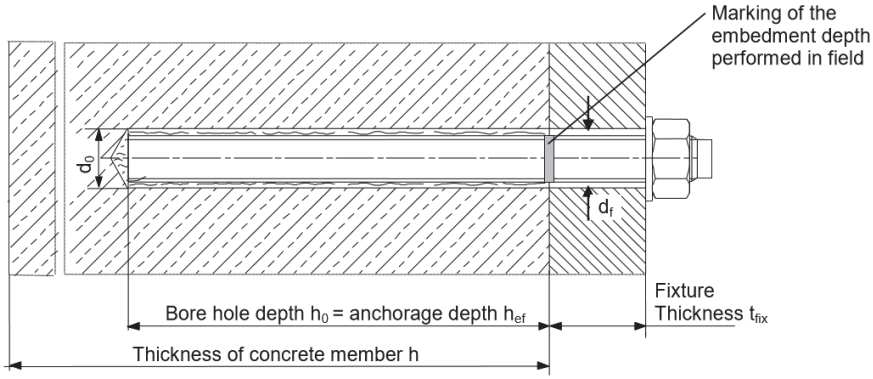

Setting details for HIS-N

Anchor size			M8	M10	M12	M16	M20
Nominal diameter of drill bit	d_0	[mm]	14	18	22	28	32
Diameter of element	d	[mm]	12,5	16,5	20,5	25,4	27,6
Effective anchorage and drill hole depth	h_{ef}	[mm]	90	110	125	170	205
Minimum base material thickness	h_{min}	[mm]	120	150	170	230	270
Diameter of clearance hole in the fixture	d_f	[mm]	9	12	14	18	22
Thread engagement length; min - max	h_s	[mm]	8-20	10-25	12-30	16-40	20-50
Minimum spacing	s_{min}	[mm]	60	75	90	115	130
Minimum edge distance	c_{min}	[mm]	40	45	55	65	90
Critical spacing for splitting failure	$s_{cr,sp}$	[mm]	$2\ c_{cr,sp}$				
Critical edge distance for splitting failure [b]	$c_{cr,sp}$	[mm]	**$1{,}0 \cdot h_{ef}$** for $h / h_{ef} \geq 2{,}0$ **$4{,}6\ h_{ef} - 1{,}8\ h$** for $2{,}0 > h / h_{ef} > 1{,}3$ **$2{,}26\ h_{ef}$** for $h / h_{ef} \leq 1{,}3$				
Critical spacing for concrete cone failure	$s_{cr,N}$	[mm]	$2\ c_{cr,N}$				
Critical edge distance for concrete cone failure [c]	$c_{cr,N}$	[mm]	$1{,}5\ h_{ef}$				
Max. torque moment [a]	T_{max}	[Nm]	10	20	40	80	150

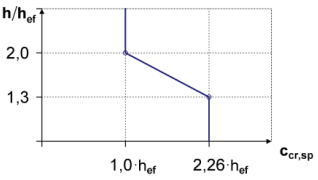

For spacing (edge distance) smaller than critical spacing (critical edge distance) the design loads have to be reduced.

a) Max. recommended torque moment to avoid splitting failure during Instalation with minimum spacing and edge distance

b) h: base material thickness ($h \geq h_{min}$)

c) The critical edge distance for concrete cone failure depends on the embedment depth h_{ef} and the design bond resistance. The simplified formula given in this table is on the save side.

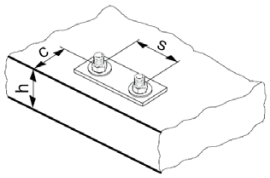

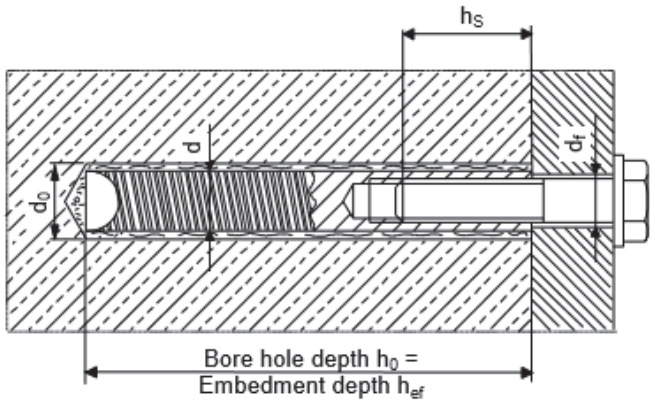

Settings details HIT-Z, HIT-Z-F and HIT-Z-R

Anchor size			M8	M10	M12	M16	M20
Nominal diameter of drill bit	d_0	[mm]	10	12	14	18	22
Length of anchor	min l	[mm]	80	95	105	155	215
	max l	[mm]	120	160	196	420	450
Nominal embedment depth range[a)]	$h_{nom,min}$	[mm]	60	60	60	96	100
	$h_{nom,max}$	[mm]	100	120	144	192	220
Borehole condition 1 Min. base material thickness	h_{min}	[mm]	h_{nom} + 60 mm			h_{nom} + 100 mm	
Borehole condition 2 Min. base material thickness	h_{min}	[mm]	h_{nom} + 30 mm ≥100 mm			h_{nom} + 45 mm ≥45 mm	
Maximum depth of drill hole	h_0	[mm]	h – 30 mm			h – 2 d_0	
Pre-setting: Diameter of clearance hole in the fixture	d_f	[mm]	9	12	14	18	22
Through-setting: Diameter of clearance hole in the fixture	d_f	[mm]	11	14	16	20	24
Maximum fixture thickness	t_{fix}	[mm]	48	87	120	303	326
Maximum fixture thickness with seismic filling set	t_{fix}	[mm]	41	79	111	292	314
Installation torque moment[b)]	T_{inst}	[Nm]	10	25	40	80	150
Critical spacing for splitting failure	$s_{cr,sp}$	[mm]	2 $c_{cr,sp}$				
Critical edge distance for splitting failure[c)]	$c_{cr,sp}$	[mm]	**1,5 · h_{nom}** for h / h_{nom} ≥ 2,35 **6,2 h_{nom} - 2,0 h** for 2,35 > h / h_{nom} > 1,35 **3,5 h_{nom}** for h / hnom ≤ 1,35			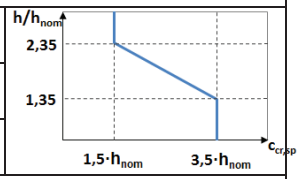	
Critical spacing for concrete cone failure	$s_{cr,N}$	[mm]	2 $C_{cr,N}$				
Critical edge distance concrete cone failure[d)]	$c_{cr,N}$	[mm]	1,5 h_{nom}				

For spacing (edge distance) smaller than critical spacing (critical edge distance) the design loads have to be reduced.

a) $H_{nom,min} \le h_{nom} \le h_{nom,max}$ (h_{nom}: embedment depth)

b) Recommended torque moment to avoid splitting failure during instalation with minimum spacing and edge distance

c) h: base material thickness ($h \ge h_{min}$)

d) The critical edge distance for concrete cone failure depends on the embedment depth h_{ef} and the design bond resistance. The simplified formula given in this table is on the save side.

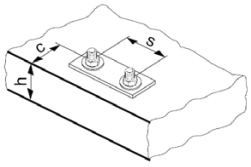

Pre-setting:
Install anchor before positioning fixture

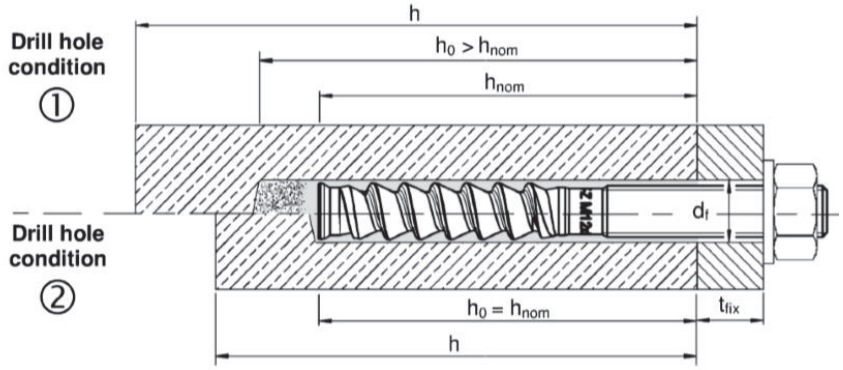

Drill hole condition 1 → non-cleaned borehole
Drill hole condition 2 → drilling dust is completely removed

Through-setting: Install anchor through positioned fixture

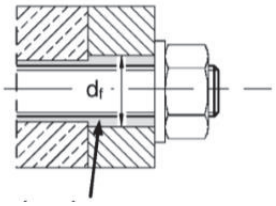

Annular gap filled with
Hilti HIT-HY 200-A

Anchor dimension for HIT-Z

Anchor size			M8	M10	M12	M16	M20
Length of anchor	min ℓ	[mm]	80	95	105	155	215
	max ℓ		120	160	196	420	450
Helix length	ℓ_{Helix}	[mm]	50	60	60	96	100

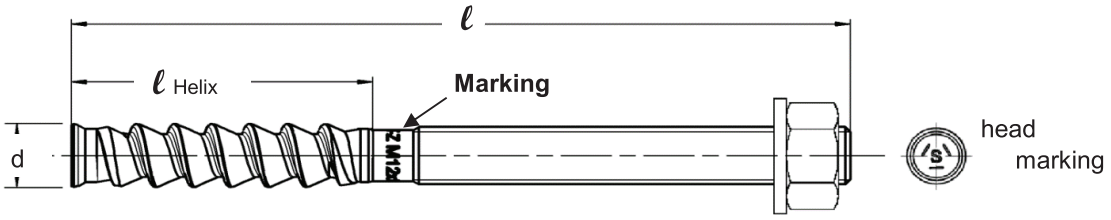

Minimum edge distance and spacing for HIT-Z

For the calculation of minimum spacing and minimum edge distance of anchors in combination with different embedment depth and thickness of concrete member the following equation shall be fulfilled: $A_{i,req} < A_{i,cal}$

Required interaction area $A_{i,cal}$ for HIT-Z

Anchor size		M8	M10	M12	M16	M20
Cracked concrete	[mm²]	19200	40800	58800	94700	148000
Non-cracked concrete	[mm²]	22200	57400	80800	128000	198000

Effective area $A_{i,ef}$ of HIT-Z

Member thickness $h \geq h_{nom} + 1{,}5 \cdot c$

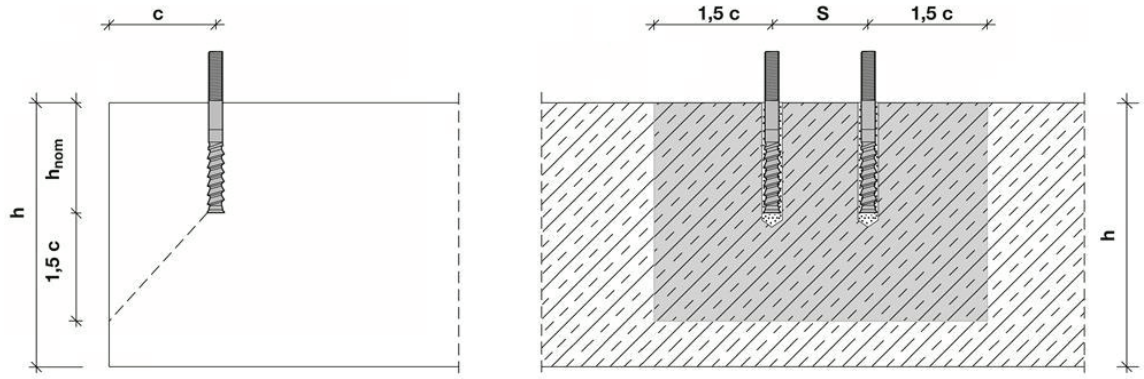

Single anchor and group of anchors with s > 3·c	[mm²]	$A_{i,cal} = (6 \cdot c) \cdot (h_{nom} + 1{,}5 \cdot c)$	with c ≥ 5·d
Group of anchors with s ≤ 3·c	[mm²]	$A_{i,cal} = (3 \cdot c + s) \cdot (h_{nom} + 1{,}5 \cdot c)$	with c ≥ 5·d and s ≥ 5·d

Member thickness $h \leq h_{nom} + 1{,}5 \cdot c$

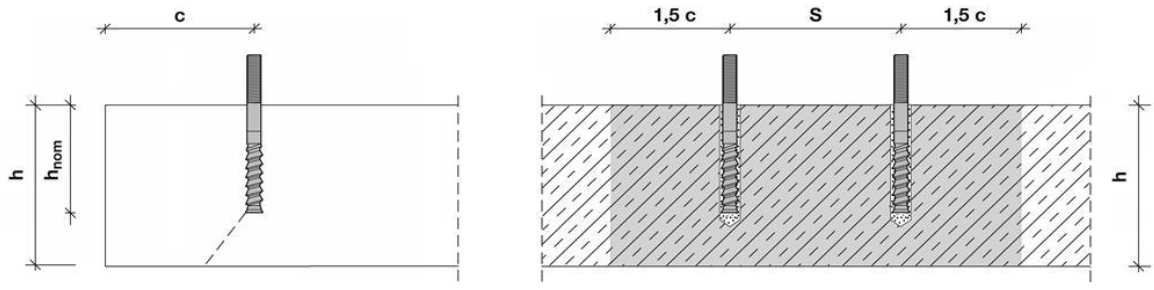

Single anchor and group of anchors with s >	[mm²]	$A_{i,cal} = (6 \cdot c) \cdot h$	with c ≥ 5·d
Group of anchors with s ≤ 3·c	[mm²]	$A_{i,cal} = (3 \cdot c + s) \cdot h$	with c ≥ 5·d and s ≥ 5·d

Best case minimum edge distance and spacing with required member thickness and embedment depth

Anchor size			M8	M10	M12	M16	M20
Cracked concrete							
Member thickness	$h \geq$	[mm]	140	200	240	300	370
Embedment depth	$h_{nom} \geq$	[mm]	80	120	150	200	220
Minimum spacing	s_{min}	[mm]	40	50	60	80	100
Corresponding edge distance	$c \geq$	[mm]	40	55	65	80	100
Minimum edge distance	$c_{min} =$	[mm]	40	50	60	80	100
Corresponding spacing	$s \geq$	[mm]	40	60	65	80	100
Non-cracked concrete							
Member thickness	$h \geq$	[mm]	140	230	270	340	410
Embedment depth	$h_{nom} \geq$	[mm]	80	120	150	200	220
Minimum spacing	s_{min}	[mm]	40	50	60	80	100
Corresponding edge distance	$c \geq$	[mm]	40	70	80	100	130
Minimum edge distance	c_{min}	[mm]	40	50	60	80	100
Corresponding spacing	$s \geq$	[mm]	40	145	160	160	235

Best case minimum member thickness and embedment depth with required minimum edge distance and spacing (borehole condition 1)

Anchor size			M8	M10	M12	M16	M20
Cracked concrete							
Member thickness	$h \geq$	[mm]	120	120	120	196	200
Embedment depth	$h_{nom} \geq$	[mm]	60	60	60	96	100
Minimum spacing	s_{min}	[mm]	40	50	60	80	100
Corresponding edge distance	$c \geq$	[mm]	40	100	140	135	215
Minimum edge distance	$c_{min} =$	[mm]	40	60	90	80	125
Corresponding spacing	$s \geq$	[mm]	40	160	220	235	365
Non cracked concrete							
Member thickness	$h \geq$	[mm]	120	120	120	196	200
Embedment depth	$h_{nom} \geq$	[mm]	60	60	60	96	100
Minimum spacing	s_{min}	[mm]	40	50	60	80	100
Corresponding edge distance	$c \geq$	[mm]	50	145	200	190	300
Minimum edge distance	c_{min}	[mm]	40	80	115	110	165
Corresponding spacing	$s \geq$	[mm]	65	240	330	310	495

Minimum edge distance and spacing – Explanation

Minimum edge and spacing geometrical requirements are determined by testing the installation conditions in which two anchors with a given spacing can be set close to an edge without forming a crack in the concrete due to tightening torque.

The HIT-Z boundary conditions for edge and spacing geometry can be found in the tables to the left. If the embedment depth and slab thickness are equal to or greater than the values in the table, then the edge and spacing values may be utilized.

PROFIS Anchor software is programmed to calculate the referenced equations in order to determine the optimized related minimum edge and spacing based on the following variables:

Cracked or non-cracked concrete	For cracked concrete it is assumed that a reinforcement is present which limits the crack width to 0,3 mm, allowing smaller values for minimum edge distance and minimum spacing
Anchor diameter	For smaller anchor diameter a smaller installation torque is required, allowing smaller values for minimum edge distance and minimum spacing
Slab thickness and embedment depth	Increasing these values allows smaller values for minimum edge distance and minimum spacing

Installation equipment

Anchor size		M8	M10	M12	M16	M20	M24	M27	M30
Rotary hammer	HIT-V	TE 2 – TE 16				TE 40 - TE 80			
	HIT-Z	TE 2 – TE 40			TE 40 – TE 80		-		
	HIS-N	TE (-A) – TE 16(-A)		TE 40 – TE 80			-		
Other tools		compressed air gun and blow out pump, set of cleaning brushes, dispenser Hollow Drill Bit							

Cleaning, drilling and installation parameters

HIT-V	HIT-Z	HIS-N	Drill bit diameters d_0 [mm]		Cleaning and installation	
			Hammer drill (HD)	Hollow Drill Bit (HDB)	Brush HIT-RB	Piston plug HIT-SZ
						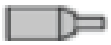
M8	**M8**	**-**	10	-	10	-
M10	**M10**	**-**	12	12	12	12
M12	**M12**	**M8**	14	14	14	14
M16	**M16**	**M10**	18	18	18	18
M20	**M20**	**M12**	22	22	22	22
M24	**-**	**M16**	28	28	28	28
M27	**-**	**-**	30	-	30	30
-	**-**	**M20**	32	32	32	32
M30	**-**	**-**	35	35	35	35

Setting instructions for HIT-V rods and HIS-N internally threaded sleeves

***For detailed information on installation see instruction for use given with the package of the product**



Safety regulations.

Review the Material Safety Data Sheet (MSDS) before use for proper and safe handling! Wear well-fitting protective goggles and protective gloves when working with Hilti HIT-HY 200 A (R).

Drilling

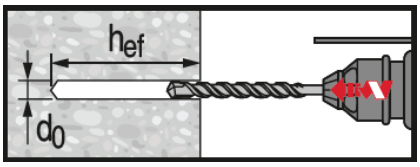

Hammer drilled hole (HD)

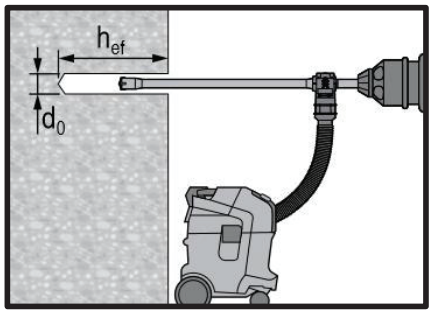

Hammer drilled hole with Hollow Drilled Bit (HDB)

No cleaning required

Cleaning

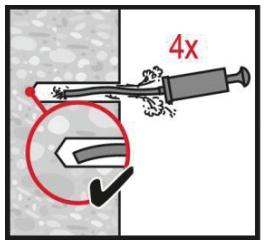

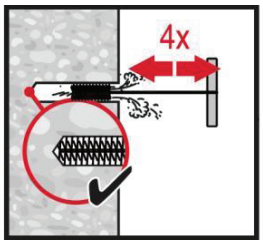

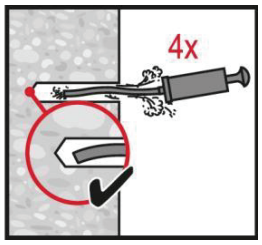

Manual cleaning (MC)
for drill diameters $d_0 \leq 20$ mm and drill hole depth $h_0 \leq 10 \cdot d$.

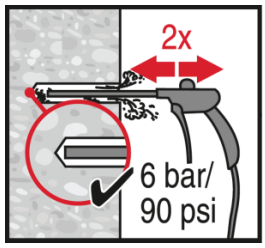

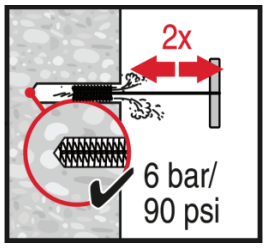

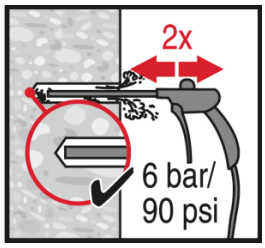

Compressed air cleaning (CAC)
for all drill hole diameters d_0 and drill hole depths $h_0 \leq 20 \cdot d$.

Injection

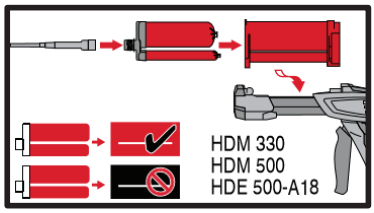

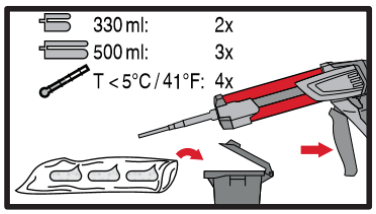

Injection system preparation.

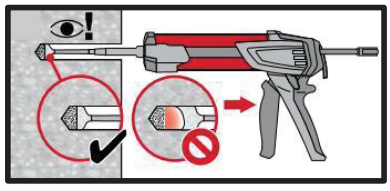

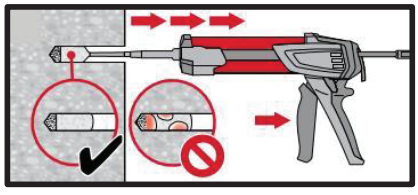

Injection method for drill hole depth $h_{ef} \leq 250$ mm.

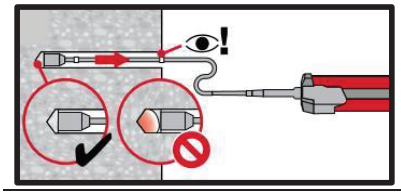

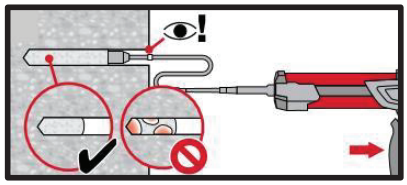

Injection method for drill hole depth h_{ef} > 250mm.

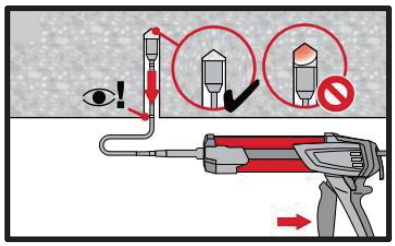

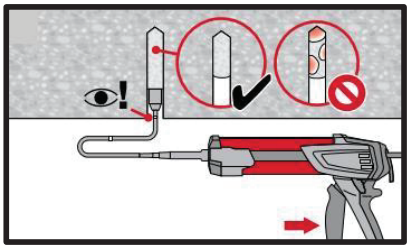

Injection method for overhead application and/or installation with embedment depth > 250 mm.

Setting the element

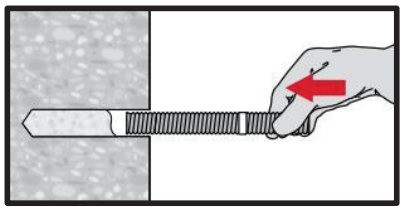

Setting element, observe working time "t_{work}".

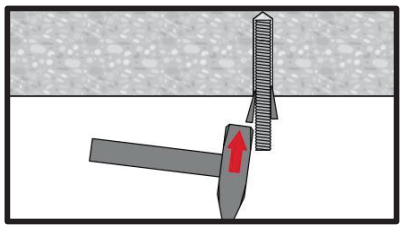

Setting element for overhead applications, observe working time "t_{work}".

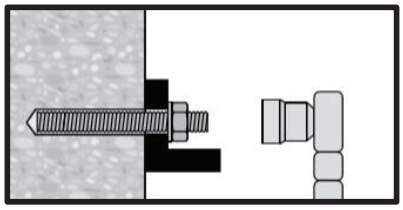

Loading the anchor after required curing time t_{cure}

Setting instructions for HIT-Z rods

***For detailed information on installation see instruction for use given with the package of the product.**



Safety regulations.

Review the Material Safety Data Sheet (MSDS) before use for proper and safe handling! Wear well-fitting protective goggles and protective gloves when working with Hilti HIT-HY 200 A (R)

Drilling

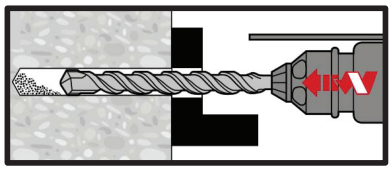



Hammer drilling: Through-setting

No cleaning required

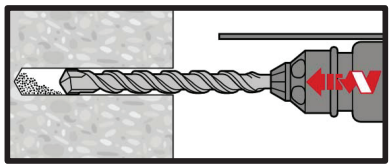



Hammer drilling: Pre-setting

No cleaning required

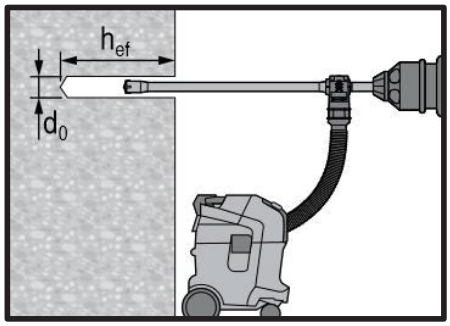

Hammer drilling with hollow drill bit: Through / pre-setting

No cleaning required

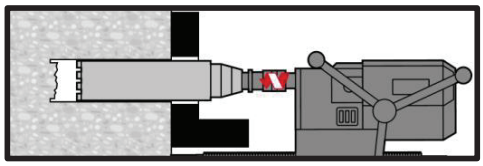

Diamond coring: Through-setting

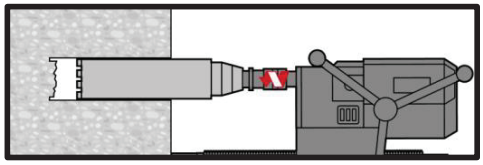

Diamond coring: Pre-setting

Cleaning

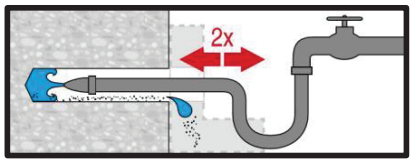

Hole flushing required for wet-drilled diamond cored holes.

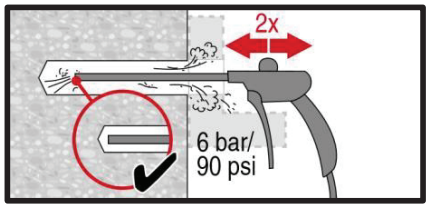

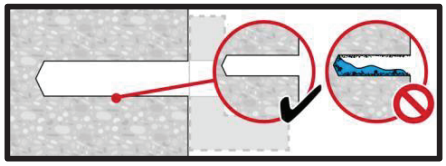

Evacuation required for wet-drilled diamond cored holes.

Injection

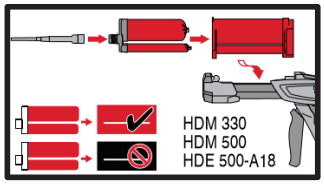

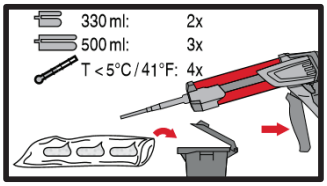

Injection system preparation.

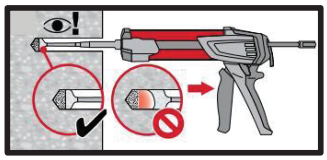

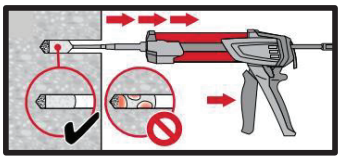

Injection of adhesive from the back of the drill hole without forming air voids.

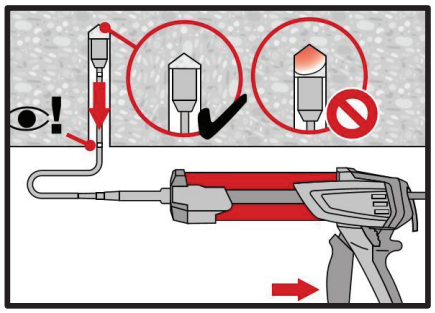

Overhead installation only with the aid of extensions and piston plugs.

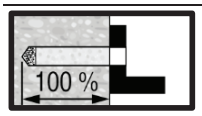

Through-setting:

Fill 100% of the drill hole.

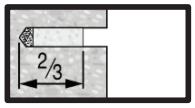

Pre-setting:

Fill approx. 2/3 of the drill hole.

Setting the element

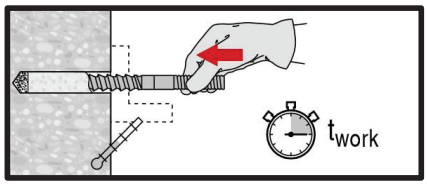

Setting element to the required embedment depth before working time "t_{work}" has elapsed.

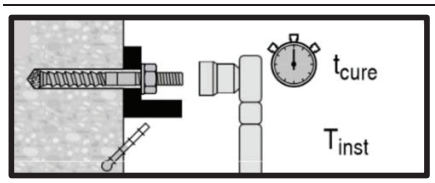

Loading the anchor: After required curing time t_{cure}.

HIT-HY 200 injection mortar

Anchor design (ETAG 001) / Rebar elements / Concrete

Injection mortar system		Benefits
	Hilti HIT - HY 200-A 330 ml foil pack (also available as 500 ml foil pack)	- **SafeSet** technology: drilling and borehole cleaning in one step with Hilti hollow drill bit - ETA seismic approval C1 - Suitable for cracked and non-cracked concrete C 12/15 to C 50/60 - Suitable for dry and water saturated concrete - High loading capacity, excellent handling - Small edge distance and anchor spacing possible - In service temperature range up to 120°C short term / 72°C long term - Large diameter applications - Two mortar versions: HY 200-R for slow cure applications and HY 200-A for fast cure applications
	Hilti HIT - HY 200-R 330 ml foil pack (also available as 500 ml foil pack)	
	Rebar B500 B (ϕ8 - ϕ32)	

Base material



Concrete (non-cracked)



Concrete (cracked)



Dry concrete



Wet concrete

Load conditions



Static/ quasi-static



Seismic, ETA-C1



Fire resistance

Installation conditions



Hammer drilling

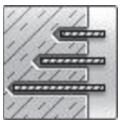

Variable embedment depth



Hilti **SafeSet** technology

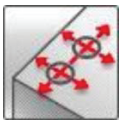

Small edge distance and spacing

Other informations



European Technical Assessment



CE conformity



PROFIS Rebar design Software

Approvals / certificates

Description	Authority / Laboratory	No. / date of issue
European technical assessment [a)]	DIBt, Berlin	ETA-11/0493 / 2017-07-28
European technical assessment [a)]	DIBT, Berlin	ETA-12/0084 / 2017-02-03

a) All data given in this section according to ETA-11/0493 issue 2017-07-28 and to ETA-12/0084 issue 2017-03-12.

Static and quasi-static loading (for a single anchor)

All data in this section applies to
-Correct setting (See setting instruction)
-No edge distance and spacing influence
-*Steel* failure
-Base material thickness, as specified in the table
-One typical embedment depth, as specified in the table
-One anchor material, as specified in the tables
-Concrete C 20/25, $f_{ck,cube}$ = 25 N/mm²
-Temperate range I
(min. base material temperature -40°C, max. long term/short term base material temperature: +24°C/40°C)

Embedment depth and base material thickness for static and quasi-static loading data

Anchor- size		ϕ8	ϕ10	ϕ12	ϕ14	ϕ16	ϕ20	ϕ25	ϕ26	ϕ28	ϕ30	ϕ32
Typical embedment depth	[mm]	80	90	110	125	145	170	210	230	270	285	300
Base material thickness	[mm]	110	120	145	165	185	220	275	295	340	360	380

Mean ultimate resistance

Anchor- size		ϕ8	ϕ10	ϕ12	ϕ14	ϕ16	ϕ20	ϕ25	ϕ26	ϕ28	ϕ30	ϕ32
Non-cracked concrete												
Tensile $N_{Ru,m}$	[kN]	*29,4*	45,0	*65,1*	87,6	93,7	148,6	204,0	249,3	297,4	297,4	348,4
Shear $V_{Ru,m}$		*14,7*	*23,1*	*32,6*	*44,1*	*57,8*	*90,3*	*141,8*	*153,3*	*177,5*	*203,7*	*232,1*
Cracked concrete												
Tensile $N_{Ru,m}$	[kN]	-	18,8	38,5	51,1	58,4	99,3	145,4	177,7	212,0	212,0	248,3
Shear $V_{Ru,m}$		-	*23,1*	*32,6*	*44,1*	*57,8*	*90,3*	*141,8*	*153,3*	*177,5*	*203,7*	*232,1*

Characteristic resistance

Anchor- size		ϕ8	ϕ10	ϕ12	ϕ14	ϕ16	ϕ20	ϕ25	ϕ26	ϕ28	ϕ30	ϕ32
Non-cracked concrete												
Tensile N_{Rk}	[kN]	24,1	33,9	49,8	66,0	70,6	111,9	153,7	187,8	224,0	224,0	262,4
Shear V_{Rk}		*14,0*	*22,0*	*31,0*	*42,0*	*55,0*	*86,0*	*135,0*	*146,0*	*169,0*	*194,0*	*221,0*
Cracked concrete												
Tensile N_{Rk}	[kN]	-	14,1	29,0	38,5	44,0	74,8	109,6	133,9	159,7	159,7	187,1
Shear V_{Rk}		-	*22,0*	*31,0*	*42,0*	*55,0*	*86,0*	*135,0*	*146,0*	*169,0*	*194,0*	*221,0*

Design resistance

Anchor- size		ϕ8	ϕ10	ϕ12	ϕ14	ϕ16	ϕ20	ϕ25	ϕ26	ϕ28	ϕ30	ϕ32
Non-cracked concrete												
Tensile N_{Rd}	[kN]	16,1	22,6	33,2	44,0	47,1	74,6	102,5	125,2	149,4	149,4	174,9
Shear V_{Rd}		9,3	14,7	20,7	28,0	36,7	57,3	90,0	97,3	112,7	129,3	147,3
Cracked concrete												
Tensile N_{Rd}	[kN]	-	9,4	19,4	25,7	29,3	49,8	73,0	89,2	106,5	106,5	124,7
Shear V_{Rd}		-	14,7	20,7	28,0	36,7	57,3	90,0	97,3	112,7	129,3	147,3

Recommended loads

Anchor- size		ϕ8	ϕ10	ϕ12	ϕ14	ϕ16	ϕ20	ϕ25	ϕ26	ϕ28	ϕ30	ϕ32
Non-cracked concrete												
Tensile N_{Rec}	[kN]	11,5	16,2	23,7	31,4	33,6	53,3	73,2	89,4	106,7	106,7	125,0
Shear V_{Rec}		6,7	10,5	14,8	20,0	26,2	41,0	64,3	69,5	80,5	92,4	105,2
Cracked concrete												
Tensile N_{Rec}	[kN]	-	6,7	13,8	18,3	20,9	35,6	52,2	63,7	76,1	76,1	89,1
Shear V_{Rec}		-	10,5	14,8	20,0	26,2	41,0	64,3	69,5	80,5	92,4	105,2

With overall partial safety factor for action γ=1,4. The partial safety factors for action depend on the type of loading and shall be taken from national regulations.

Seismic loading (for a single anchor)

All data in this section applies to:
- Correct setting (See setting)
- No edge distance and spacing influence
- *Steel* failure
- Minimum base material thickness
- Concrete C 20/25, $f_{ck,cube}$ = 25 N/mm²

-Temperate range I
(min, base material temperature -40°C, max, long term/short term base material temperature: +24°C/40°C)
- α_{gap} = 1,0

Embedment depth and base material thickness in case of seismic performance category C1

Anchor- size		ϕ8	ϕ10	ϕ12	ϕ14	ϕ16	ϕ20	ϕ25	ϕ26	ϕ28	ϕ30	ϕ32
Typical embedment depth	[mm]	-	90	110	125	145	170	210	230	270	285	300
Base material thickness	[mm]	-	120	145	165	185	220	275	295	340	360	380

Characteristic resistance in case of seismic performance category C1

Anchor- size		ϕ8	ϕ10	ϕ12	ϕ14	ϕ16	ϕ20	ϕ25	ϕ26	ϕ28	ϕ30	ϕ32
Tensile $N_{Rk,\ seis}$	[kN]	-	12,4	25,3	33,5	38,3	65,2	93,1	113,8	135,8	135,8	159,0
Shear $V_{Rk,\ seis}$		-	*15,0*	*22,0*	*29,0*	*39,0*	*60,0*	*95,0*	*102,0*	*118,0*	*136,0*	*155,0*

Design resistance in case of seismic performance category C1

Anchor- size		ϕ8	ϕ10	ϕ12	ϕ14	ϕ16	ϕ20	ϕ25	ϕ26	ϕ28	ϕ30	ϕ32
Tensile $N_{Rd,\ seis}$	[kN]	-	8,3	16,9	22,4	25,6	43,4	62,1	75,8	90,5	90,5	106,0
Shear $V_{Rd,\ seis}$		-	10,0	14,7	19,3	26,0	40,0	63,3	68,0	78,7	90,7	103,3

Materials

Mechanical properties

Anchor size		ϕ8	ϕ10	ϕ12	ϕ14	ϕ16	ϕ20	ϕ25	ϕ26	ϕ28	ϕ30	ϕ32
Nominal tensile strength f_{uk}	[N/mm²]	550	550	550	550	550	550	550	550	550	550	550
Yield strength f_{yk}	[N/mm²]	500	500	500	500	500	500	500	550	500	550	500
Stressed cross-section A_s	[mm²]	50,3	78,5	113,1	153,9	201,1	314,2	490,9	530,9	615,8	706,9	804,2
Moment of resistance W	[mm³]	50,3	98,2	169,6	269,4	402,1	785,4	1534	1726	2155	2651	3217

Material quality

Part	Material
Rebar EN 1992-1-1:2004 and AC:2010	Bars and de-coiled rods class B or C according to NDP or NCL of EN 1992-1-1/NA:2013

Setting information

Installation temperature range
- 10°C to + 40°C

Service temperature range

Hilti HIT-HY 200 injection mortar may be applied in the temperature ranges given below, An elevated base material temperature may lead to a reduction of the design bond resistance,

Temperature range	Base material temperature	Max, long term base material temperature	Max, short term base material temperature
Temperature range I	-40 °C to + 40 °C	+ 24 °C	+ 40 °C
Temperature range II	-40 °C to + 80 °C	+ 50 °C	+ 80 °C
Temperature range III	-40 °C to + 120 °C	+ 72 °C	+ 120 °C

Max, short term base material temperature
Short term elevated base material temperatures are those that occur over brief intervals, e,g, as a result of diurnal cycling,
Max, long term base material temperature
Long term elevated base material temperatures are roughly constant over significant periods of time,

Curing and working time

Temperature of the base material	HIT-HY 200-A		HIT-HY 200-R	
	Maximum working time t_{work}	Minimum curing time t_{cure}	Maximum working time t_{work}	minimum curing time t_{cure}
- 10°C < T_{BM} ≤ - 5°C	1,5 h	7 h	3 h	20 h
- 5°C < T_{BM} ≤ 0°C	50 min	4 h	2 h	8 h
0°C < T_{BM} ≤ 5°C	25 min	2 hour	1 h	4 h
5°C < T_{BM} ≤ 10°C	15 min	75 min	40 min	2,5 h
10°C < T_{BM} ≤ 20°C	7 min	45 min	15 min	1,5 h
20°C < T_{BM} ≤ 30°C	4 min	30 min	9 min	1 h
30°C < T_{BM} ≤ 40°C	3 min	30 min	6 min	1 h

The curing time data are valid for dry base material only, In wet base material the curing times must be doubled,

Installation equipment

Anchor size	ϕ8	ϕ10	ϕ12	ϕ14	ϕ16	ϕ20	ϕ25	ϕ26	ϕ28	ϕ30	ϕ32
Rotary hammer	TE 2 (-A) – TE 16 (-A)					TE 40 – TE 80					
Other tools	Compressed air gun, blow out pump Set of cleaning brushes, dispenser										

Setting details

Anchor size			Ø8	Ø10	Ø12	Ø14	Ø16	Ø20	Ø25	Ø26	Ø28	Ø30	Ø32
Nominal diameter of drill bit	d_0	[mm]	10 / 12 a)	12 / 14 a)	14 / 16 a)	18	20	25	32	32	35	37	40
Effective anchorage and drill hole depth range b)	$h_{ef,min}$	[mm]	60	60	70	75	80	90	100	104	112	120	128
	$h_{ef,max}$	[mm]	160	200	240	280	320	400	500	520	560	600	640
Minimum base material thickness	h_{min}	[mm]	h_{ef} + 30 mm ≥ 100 mm			h_{ef} + 2 d_0							
Minimum spacing	s_{min}	[mm]	40	50	60	70	80	100	125	130	140	150	160
Minimum edge distance	c_{min}	[mm]	40	45	45	50	50	65	70	75	75	80	80
Critical spacing for splitting failure	$s_{cr,sp}$	[mm]	2 $c_{cr,sp}$										
Critical edge distance for splitting failure c)	$c_{cr,sp}$	[mm]	**1,0 · h_{ef}** for h / h_{ef} ≥ 2,0 **4,6 h_{ef} - 1,8 h** for 2,0 > h / h_{ef} > 1,3 **2,26 h_{ef}** for h / h_{ef} ≤ 1,3										
Critical spacing for concrete cone failure	$s_{cr,N}$	[mm]	2 $c_{cr,N}$										
Critical edge distance for concrete cone failure d)	$c_{cr,N}$	[mm]	1,5 h_{ef}										

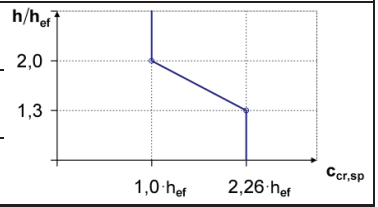

For spacing (edge distance) smaller than critical spacing (critical edge distance) the design loads have to be reduced,

a) Both given values for drill bit diameter can be used
b) $h_{ef,min} \le h_{ef} \le h_{ef,max}$ (h_{ef}: embedment depth)
c) h: base material thickness ($h \ge h_{min}$)
d) The critical edge distance for concrete cone failure depends on the embedment depth h_{ef} and the design bond resistance, The simplified formula given in this table is on the save side.

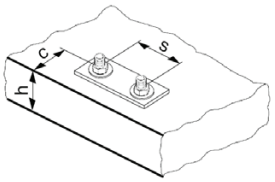

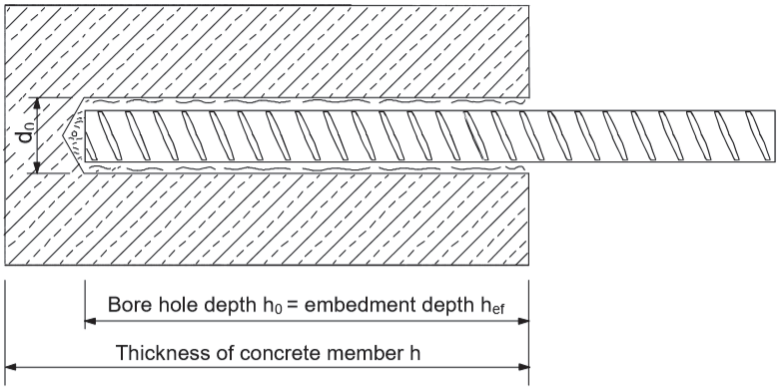

Rebar	Hammer drill (HD)	Hollow Drill Bit (HDB)	Brush HIT-RB
	d_0 [mm]		size [mm]
			
ϕ8	12 / 10 a)	12	12 / 10 a)
ϕ10	14 / 12 a)	14 / 12 a)	14 / 12 a)
ϕ12	16 / 14 a)	16 / 14 a)	16 / 14 a)
ϕ14	18	18	18
ϕ16	20	20	20
ϕ20	25	25	25
ϕ25	32	32	32
ϕ26	32	32	32
ϕ28	35	35	35
ϕ30	37	-	37
ϕ32	40	-	40

a) Both given values can be used

Setting instructions

***For detailed information on installation see instruction for use given with the package of the product,**



Safety regulations.

Review the Material Safety Data Sheet (MSDS) before use for proper and safe handling! Wear well-fitting protective goggles and protective gloves when working with Hilti HIT-HY 200.

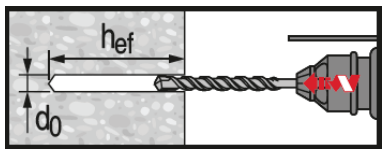

Hammer drilled hole (HD)

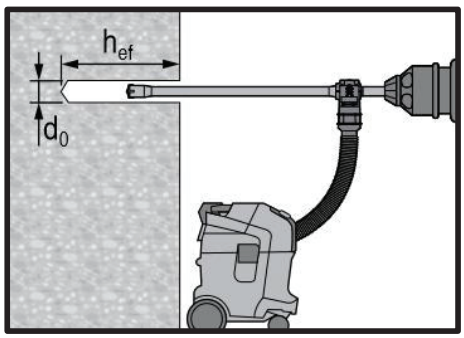

Hammer drilled hole with Hollow Drilled Bit (HDB)

No cleaning required

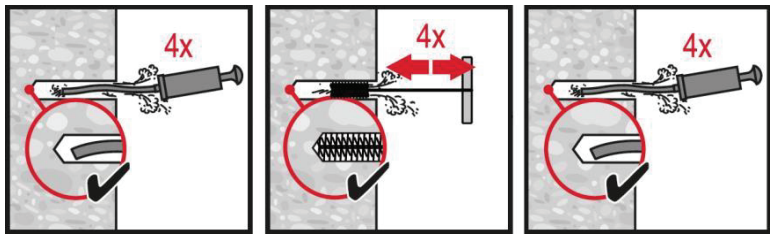

Manual cleaning (MC)
for drill diameters $d_0 \leq 20$ mm and drill hole depth $h_0 \leq 10 \cdot d$.

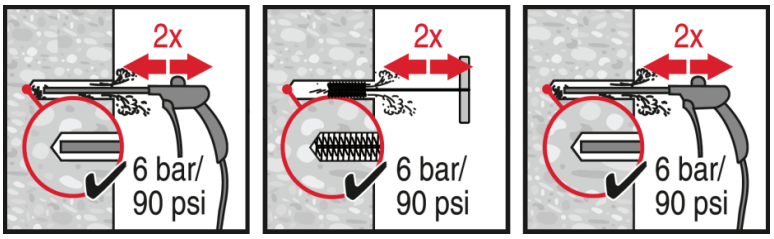

Compressed air cleaning (CAC)
for all drill hole diameters d_0 and drill hole depths $h_0 \leq 20 \cdot d$.

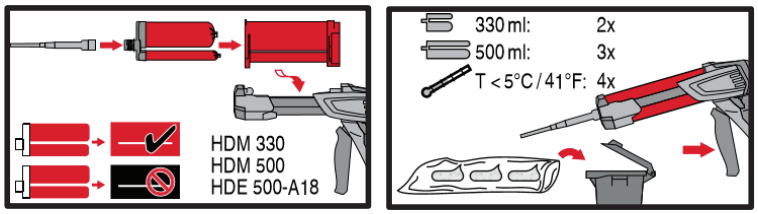

Injection system preparation.

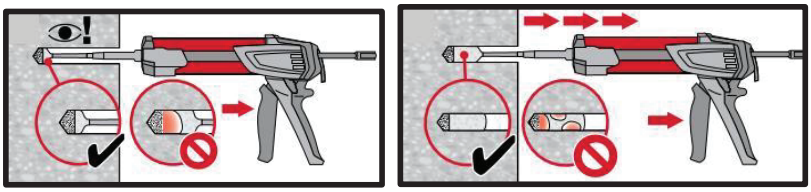

Injection method for drill hole depth $h_{ef} \leq 250$ mm.

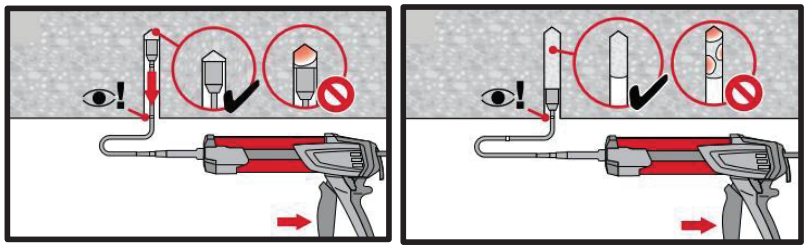

Injection method for overhead application and/or installations with embedment depth $h_{ef} \geq 250$ mm.

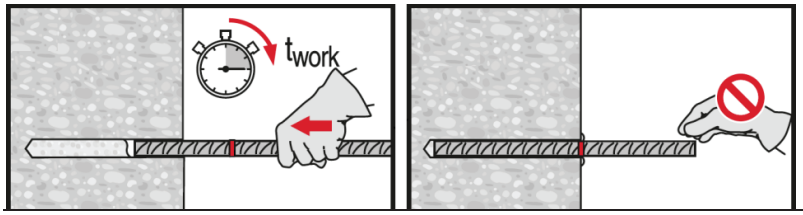

Setting element, observe working time "t_{work}".

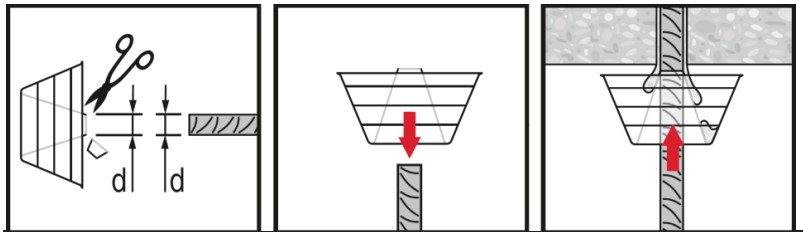

Setting element for overhead applications, observe working time "t_{work}".

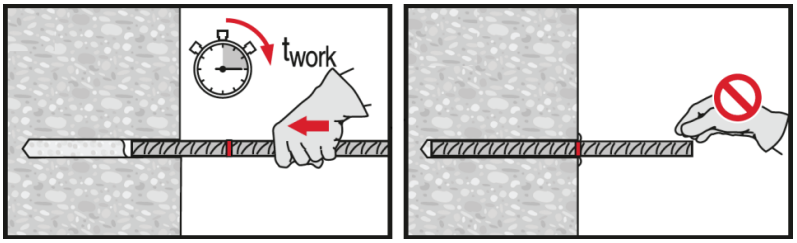

Setting element, observe working time "t_{work}".

HIT-HY 200 injection mortar

Rebar design (EN 1992-1) / Rebar elements / Concrete

Injection mortar system		Benefits
	Hilti HIT-HY 200-R 330 ml foil pack (also available as 500 ml foil pack)	- **Safe**Set technology: Hilti hollow drill bit for hammer drilling - HY 200-R version is formulated for best handling and cure time specifically for rebar applications - Suitable for concrete C 12/15 to C 50/60 - Suitable for dry and water saturated concrete - For rebar diameters up to 32 mm - Non corrosive to rebar elements - Good load capacity at elevated temperatures - Suitable for embedment length up to 1000 mm - Suitable for applications down to -10 °C - Two mortar versions: HY 200-A for slow cure applications and HY 200-R for fast cure applications
	Hilti HIT-HY 200-A 330 ml foil pack (also available as 500 ml foil pack)	
	Rebar (ϕ8 - ϕ32)	

Base material

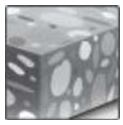

Concrete (non-cracked)

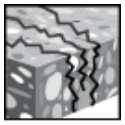

Concrete (cracked)



Dry concrete



Wet concrete

Load conditions



Static/ quasi-static



Seismic, ETA-C1



Fire resistance

Installation conditions



Hammer drilling

SAFE:SET

Hilti Safe**Set** technology

Other informations



European Technical Assessment



CE conformity



PROFIS Rebar design Software

Approvals / certificates

Description	Authority / Laboratory	No. / date of issue
European technical Assessment [a)]	DIBt, Berlin	ETA-11/0492/ 2014-06-26 (HY200 A)
European technical Assessment [a)]	DIBt, Berlin	ETA-12/0083/ 2014-06-26 (HY200 R)
Assessment (fire)	CSTB, Marne la Vallée	Z-21.8-1948 / 2013-11-14 (HY200 A)
Assessment (fire)	CSTB, Marne la Vallée	Z-21.8-1947 / 2014-07-22 (HY200 R)

b) All data given in this section according to ETA-11/0492, issue 2014-06-26 and ETA-12/0083, issue 2014-06-26,.

Static and quasi-static loading

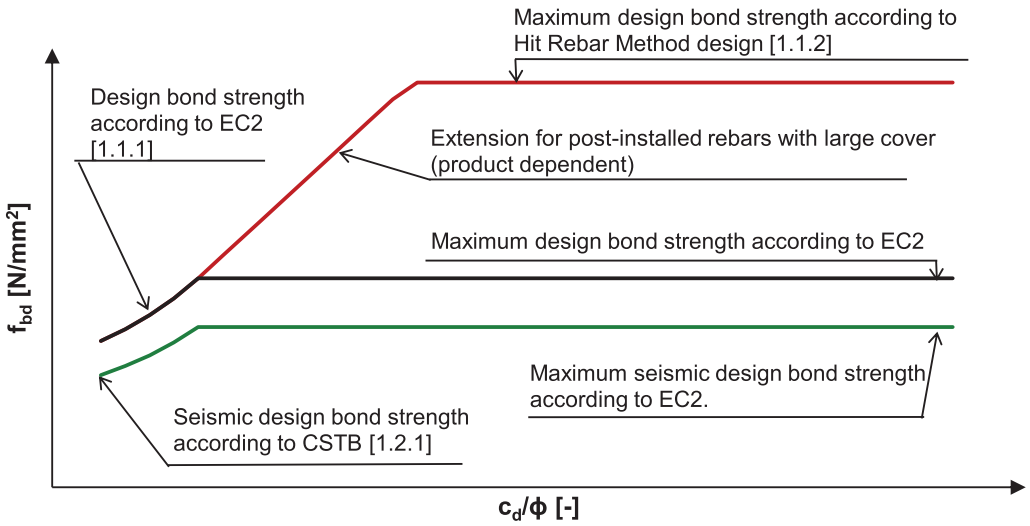

Effective limit on bond stress for post-installed rebar using Hilti mortar systems and design bond strength values as provided by the EC2.

Static EC2 design (small concrete cover)

Design bond strength in N/mm² for good bond conditions

All allowed drilling methods									
Rebar - size	Concrete class								
	C12/15	C16/20	C20/25	C25/30	C30/37	C35/45	C40/50	C45/55	C50/60
ϕ8 - ϕ32	1,6	2,0	2,3	2,7	3,0	3,4	3,7	4,0	4,3

For poor bond conditions multiply the values by 0,7. Values valid for non-cracked and cracked concrete.

Static Hit Rebar Method design (large concrete cover)

Maximum design bond strength in N/mm² for good bond conditions

Non-cracked concrete, all allowed drilling methods								
Temperature range	Rebar - size	Concrete class						
		C20/25	C25/30	C30/37	C35/45	C40/45	C45/55	C50/60
I: 40°C/24°C	ϕ8 - ϕ32	8	8,2	8,3	8,4	8,6	8,7	8,8
II: 58°C/35°C		6,7	6,8	6,9	7,0	7,1	7,2	7,3
III: 70°C/43°C		5,7	5,8	5,9	6,0	6,1	6,1	6,2
Cracked concrete, all allowed drilling methods								
I: 40°C/24°C	ϕ12 - ϕ32	4,7	4,8	4,8	4,9	5,0	5,1	5,1
II: 58°C/35°C		3,7	3,7	3,8	3,9	3,9	4,0	4,0
III: 70°C/43°C		3,3	3,4	3,5	3,5	3,6	3,6	3,7

For poor bond conditions multiply the values by 0,7. *The reduction factor for rebar diameter equal to 10 mm is 0,72

Additional Hilti Technical Data:

Reduction factor for splitting with large concrete cover: δ = 0,306 (Hilti additional data)

Minimum anchorage length and minimum lap length

The minimum anchorage length $\ell_{b,min}$ and the minimum lap length $\ell_{0,min}$ according to EN 1992-1-1 shall be multiplied by relevant **Amplification factor α_{lb}** in the table below.

Amplification factor α_{lb} for the min. anchorage length and min. lap length for

All allowed hammer drilling methods									
Rebar - size	Concrete class								
	C12/15	C16/20	C20/25	C25/30	C30/37	C35/45	C40/50	C45/55	C50/60
ϕ8 - ϕ32	1,0								

Anchorage length for characteristic steel strength f_{yk}=500 N/mm² for good conditions

All allowed drilling methods									
Rebar-size	Concrete class	Yielding load [kN]	$l_{b,min}$ [1] [mm]	$l_{0,min}$ [1] [mm]	$l_{bd,y}$ (α2=1) [2] [mm]	$l_{bd,y}$ (α2=0.7) [3] [mm]	$l_{bd,y,HRM}$ (α2<0.7) [4] [mm]	l_{max} -10°C ≤ Ct [5] ≤ 0°C [mm]	l_{max} Ct [5] > 0°C [mm]
ϕ8	C20/25	21,9	113	200	378	265	109	700	1000
ϕ8	C50/60	21,9	100	200	202	142	99	700	1000
ϕ10	C20/25	34,1	142	200	473	331	136	700	1000
ϕ10	C50/60	34,1	100	200	253	177	124	700	1000
ϕ12	C20/25	49,2	170	200	567	397	163	700	1000
ϕ12	C50/60	49,2	120	200	303	212	148	700	1000
ϕ14	C20/25	66,9	198	210	662	463	190	700	1000
ϕ14	C50/60	66,9	140	210	354	248	173	700	1000
ϕ16	C20/25	87,4	227	240	756	529	217	700	1000
ϕ16	C50/60	87,4	160	240	404	283	198	700	1000
ϕ18	C20/25	110,6	255	270	851	595	245	700	1000
ϕ18	C50/60	110,6	180	270	455	319	222	700	1000
ϕ20	C20/25	136,6	284	300	945	662	272	700	1000
ϕ20	C50/60	136,6	200	300	506	354	247	700	1000
ϕ22	C20/25	165,3	312	330	1040	728	299	700	1000
ϕ22	C50/60	165,3	220	330	556	389	272	700	1000
ϕ24	C20/25	196,7	340	360	1134	794	326	700	1000
ϕ24	C50/60	196,7	240	360	607	425	296	700	1000
ϕ25	C20/25	213,4	354	375	1181	827	340	700	1000
ϕ25	C50/60	213,4	250	375	632	442	309	700	1000
ϕ26	C20/25	230,8	369	390	1229	860	353	700	1000
ϕ26	C50/60	230,8	260	390	657	460	321	700	1000
ϕ28	C20/25	267,7	397	420	1323	926	380	700	1000
ϕ28	C50/60	267,7	280	420	708	495	346	700	1000
ϕ30	C20/25	307,3	425	450	1418	992	408	700	1000
ϕ30	C50/60	307,3	300	450	758	531	371	700	1000
ϕ32	C20/25	349,7	454	480	1512	1059	435	700	1000
ϕ32	C50/60	349,7	320	480	809	566	395	700	1000

1) According to EC2: EN 1992-1-1:2004 $l_{b,min}$ (8.6) and $l_{0,min}$ (8.11) are calculated for good bond conditions with characteristic yield strength f_{yk} = 500 N/mm², γ_M=1,15 and α_6 = 1,0
2) Embedment depth for yield of the rebar and for c_d/ϕ = 1 (characteristic yield strength f_{yk} = 500 N/mm²)
3) Embedment depth for yield of the rebar and for c_d/ϕ = 3 (characteristic yield strength f_{yk} = 500 N/mm²)
4) Embedment depth according to Hit Rebar design for yield of the rebar and for c_d/ϕ > 8 (Temperature range I,
5) characteristic yield strength f_{yk} = 500 N/mm²)
6) c_t=concrete temperature

Seismic loading

Seismic DTA 3/13-749 design

Design bond strength in N/mm² according to DTA 3/13-749 for good bond conditions

All allowed drilling methods								
Temperature range	Rebar - size	Concrete class						
		C20/25	C25/30	C30/37	C35/45	C40/50	C45/55	C50/60
-40°C - +80°C	ϕ8 - ϕ32	2,3	2,7	2,7	2,7	2,7	2,7	2,7

For poor bond conditions multiply the values 0,7.

Anchorage length for characteristic steel strength f_{yk}=500 N/mm² for good conditions

All allowed drilling methods						
Rebar - size	Concrete class	Yielding load [kN]	$l_{b,min}$ [1] [mm]	$l_{0,min}$ [1] [mm]	$l_{bd,y\ (\alpha2=1)}$ [2] [mm]	$l_{bd,y\ (\alpha2=0.7)}$ [3] [mm]
ϕ8	C20/25	21,9	113	200	378	265
ϕ8	C50/60	21,9	100	200	322	225
ϕ10	C20/25	34,1	142	200	473	331
ϕ10	C50/60	34,1	121	200	403	282
ϕ12	C20/25	49,2	170	200	567	397
ϕ12	C50/60	49,2	145	200	483	338
ϕ14	C20/25	66,9	198	210	662	463
ϕ14	C50/60	66,9	169	210	564	395
ϕ16	C20/25	87,4	227	240	756	529
ϕ16	C50/60	87,4	193	240	644	451
ϕ18	C20/25	110,6	255	270	851	595
ϕ18	C50/60	110,6	217	270	725	507
ϕ20	C20/25	136,6	284	300	945	662
ϕ20	C50/60	136,6	242	300	805	564
ϕ22	C20/25	165,3	312	330	1040	728
ϕ22	C50/60	165,3	266	330	886	620
ϕ24	C20/25	196,7	340	360	1134	794
ϕ24	C50/60	196,7	290	360	966	676
ϕ25	C20/25	213,4	354	375	1181	827
ϕ25	C50/60	213,4	302	375	1006	705
ϕ26	C20/25	230,8	369	390	1229	860
ϕ26	C50/60	230,8	314	390	1047	733
ϕ28	C20/25	267,7	397	420	1323	926
ϕ28	C50/60	267,7	338	420	1127	789
ϕ30	C20/25	307,3	425	450	1418	992
ϕ30	C50/60	307,3	362	450	1208	845
ϕ32	C20/25	349,7	454	480	1512	1059
ϕ32	C50/60	349,7	386	480	1288	902

Fire resistance

a) Anchoring application

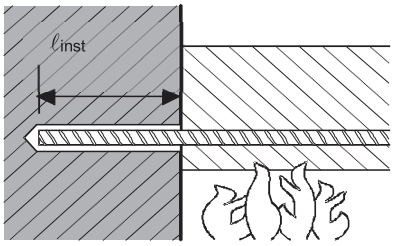

Maximum force ($F_{s,T,max}$) in rebar in conjunction with HIT-HY 200 as a function of embedment depth (ℓ_{inst}) for the fire resistance classes F30 to F180 according to EC2.

Rebar-size	$F_{s,T,max}$ [kN]	ℓ_{inst} [mm]	Fire resistance of bar [kN]				
			R30	R60	R90	R120	R180
ϕ8	16,19	80	3,0	0,7	0,2	0,0	0,0
		120	7,0	2,2	1,3	0,7	0,2
		170	*16,2*	10,2	9,2	4,0	1,7
		210		*16,2*	*16,2*	11,0	7,5
		230				14,5	10,9
		250				*16,2*	14,5
		300					*16,2*
ϕ10	25,29	100	6,1	2,0	1,0	0,4	0,0
		150	19,3	9,3	7,1	2,2	1,0
		190	*25,3*	18,0	15,9	9,3	4,9
		230		*25,3*	24,7	18,1	13,7
		260			*25,3*	24,7	20,3
		280				*25,3*	24,7
		320					*25,3*
ϕ12	36,42	120	15,3	6,0	1,9	1,1	0,3
		180	31,0	19,0	17,8	8,5	7,0
		220	*36,4*	29,6	27,0	19,1	13,8
		260		*36,4*	*36,4*	29,7	24,4
		280				35,0	29,6
		300				*36,4*	34,9
		340					*36,4*
ϕ14	49,58	140	24,0	9,9	6,9	2,6	1,0
		210	45,0	31,4	28,5	25,7	13,0
		240	*49,6*	40,6	37,7	32,8	22,3
		280		*49,6*	*49,6*	40,7	34,6
		300				44,7	40,7
		330				*49,6*	48,1
		360					*49,6*
ϕ16	64,75	160	34,5	18,4	14,9	4,4	2,3
		240	62,6	46,4	43,0	37,7	25,5
		260	*64,8*	53,5	50,0	44,7	32,5
		300		*64,8*	57,0	51,7	49,6
		330			*64,8*	61,3	57,2
		360				*64,8*	62,7
		400					*64,8*

Maximum force ($F_{s,T,max}$) in rebar in conjunction with HIT-HY 200 as a function of embedment depth (ℓ_{inst}) for the fire resistance classes F30 to F180 according to EC2.

Rebar-size	$F_{s,T,max}$ [kN]	ℓ_{inst} [mm]	Fire resistance of bar [kN]				
			R30	R60	R90	R120	R180
ϕ20	101,18	200	60,7	40,0	36,3	29,3	14,3
		250	78,3	62,5	58,3	51,3	36,3
		310	*101,2*	88,9	84,6	77,6	62,6
		350		*101,2*	*101,2*	94,2	80,2
		370				*101,2*	83,5
		390					97,8
		430					*101,2*
ϕ25	158,09	250	97,9	78,1	72,6	64,7	45,3
		280	126,5	94,6	89,4	81,2	61,8
		370	*158,1*	144,0	127,9	119,7	111,2
		410		*158,1*	150,0	141,8	123,2
		430			*158,1*	150,0	144,2
		450				*158,1*	155,2
		500					*158,1*
ϕ32	158,09	250	97,9	78,1	72,6	64,7	45,3
		280	126,5	94,6	89,4	81,2	61,8
		370	*158,1*	144,0	127,9	119,7	111,2
		410		*158,1*	150,0	141,8	123,2
		430			*158,1*	150,0	144,2
		450				*158,1*	155,2
		500					*158,1*

Characteristic yield strength f_{yk} = 500 N/mm²
Steel failure

b) Overlap joint application

Max. bond stress, $f_{bd,FIRE}$, depending on actual clear concrete cover for classifying the fire resistance.

It must be verified that the actual force in the bar during a fire, $F_{s,T}$, can be taken up by the bar connection of the selected length, ℓ_{inst}. Note: Cold design for ULS is mandatory.

$F_{s,T} \leq (\ell_{inst} - c_f) \cdot \phi \cdot \pi \cdot f_{bd,FIRE}$ where: $(\ell_{inst} - c_f) \geq \ell_s$;

ℓ_s = lap length
ϕ = nominal diameter of bar

$\ell_{inst} - c_f$ = selected overlap joint length; this must be at least ℓ_s,
but may not be assumed to be more than 80 ϕ

$f_{bd,FIRE}$ = bond stress when exposed to fire

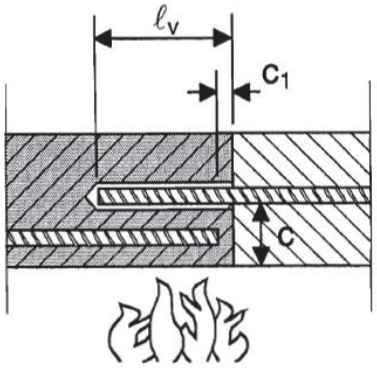

Critical temperature-dependent bond stress, τ_c, concerning "overlap joint" for Hilti HIT-HY 200 injection adhesive in relation to fire resistance class and required minimum concrete coverage c.

Clear concrete cover c	Max. bond stress, τ_c [N/mm²]				
[mm]	R30	R60	R90	R120	R180
30	0,6	0,3	-	-	-
35	0,7	0,3			
40	0,9	0,4	0,2		
45	1,0	0,4	0,2		
50	1,2	0,5	0,3		
55	1,5	0,6	0,3	0,2	
60	1,8	0,8	0,4	0,3	
65	2,2	0,9	0,5	0,3	
70		1,0	0,5	0,3	
75		1,2	0,6	0,4	0,2
80		1,5	0,7	0,5	0,3
85		1,7	0,8	0,5	0,3
90		2,0	1,0	0,6	0,3
95		2,2	1,1	0,7	0,4
100			1,3	0,8	0,4
105			1,5	0,9	0,5
110			1,7	1,1	0,5
115			2,0	1,2	0,6
120			2,2	1,4	0,6
125				1,6	0,7
130				1,9	0,8
135				2,1	0,9
200					2,3

Materials

Material quality

Part	Material
Rebar EN 1992-1-1	Bars and de-coiled rods class B or C with f_{yk} and k according to NDP or NCL of EN 1992-1-1 $f_{uk} = f_{tk} = k \cdot f_{yk}$

Fitness for use

Some creep tests have been conducted in accordance with ETAG guideline 001 part 5 and TR 023 in the following conditions: **in dry environment at 50 °C during 90 days**.
These tests show an excellent behaviour of the post-installed connection made with HIT-HY 200: low displacements with long term stability, failure load after exposure above reference load.

Resistance to chemical substances

Chemical	Resistance	Chemical	Resistance
Air	+	Gasoline	+
Acetic acid 10%	+	Glycole	o
Acetone	o	Hydrogen peroxide 10%	o
Ammonia 5%	+	Lactic acid 10%	+
Benzyl alcohol	-	Maschinery oil	+
Chloric acid 10%	o	Methylethylketon	o
Chlorinated lime 10%	+	Nitric acid 10%	o
Citric acid 10%	+	Phosphoric acid 10%	+
Concrete plasticizer	+	Potassium Hydroxide pH 13,2	+
De-icing salt (Calcium chloride)	+	Sea water	+
Demineralized water	+	Sewage sludge	+
Diesel fuel	+	Sodium carbonate 10%	+
Drilling dust suspension pH 13,2	+	Sodium hypochlorite 2%	+
Ethanol 96%	-	Sulfuric acid 10%	+
Ethylacetate	-	Sulfuric acid 30%	+
Formic acid 10%	+	Toluene	o
Formwork oil	+	Xylene	o

+ resistant
o resistant in short term (max. 48h) contact
- not resistant

Electrical Conductivity
HIT-HY 200 in the hardened state **is not conductive electrically**. Its electric resistivity is $15{,}5 \cdot 10^9\ \Omega \cdot cm$ (DIN IEC 93 – 12.93). It is adapted well to realize electrically insulating anchoring (ex: railway applications, subway)

Installation temperature range
-10°C to +40°C

Service temperature range
Hilti HIT-HY 200 injection mortar may be applied in the temperature ranges given below. An elevated base material temperature may lead to a reduction of the design bond resistance.

Temperature range	Base material temperature	Maximum long term base material temperature	Maximum short term base material temperature
Temperature range I	-40 °C to +80 °C	+50 °C	+80 °C

Max short term base material temperature
Short-term elevated base material temperatures are those that occur over brief intervals, e.g. as a result of diurnal cycling.
Max long term base material temperature
Long-term elevated base material temperatures are roughly constant over significant periods of time.

Curing and working time

Temperature of the base material	HIT-HY 200-A		HIT-HY 200-R	
	Maximum working time t_{work}	Minimum curing time t_{cure}	Maximum working time t_{work}	minimum curing time t_{cure}
- 10°C < T_{BM} ≤ - 5°C	1,5 h	7 h	3 h	20 h
- 5°C < T_{BM} ≤ 0°C	50 min	4 h	2 h	8 h
0°C < T_{BM} ≤ 5°C	25 min	2 hour	1 h	4 h
5°C < T_{BM} ≤ 10°C	15 min	75 min	40 min	2,5 h
10°C < T_{BM} ≤ 20°C	7 min	45 min	15 min	1,5 h
20°C < T_{BM} ≤ 30°C	4 min	30 min	9 min	1 h
30°C < T_{BM} ≤ 40°C	3 min	30 min	6 min	1 h

Setting information

Installation equipment

Rebar – size	ϕ8 - ϕ16	ϕ18 - ϕ32
Rotary hammer	TE 2 (-A)– TE 40(-A)	TE40 – TE80
Other tools	Blow out pump ($h_{ef} \leq 10 \cdot d$)	-
	Compressed air gun[a)] Set of cleaning brushes[b)], dispenser, piston plug	

a) Compressed air gun with extension hose for all drill holes deeper than 250 mm (for ϕ 8 to ϕ 12) or deeper than 20·ϕ (for ϕ > 12 mm)
b) Automatic brushing with round brush for all drill holes deeper than 250 mm (for ϕ 8 to ϕ 12) or deeper than 20·ϕ (for ϕ > 12 mm)

Minimum concrete cover c_{min} of the post-installed rebar

Drilling method	Bar diameter [mm]	Minimum concrete cover c_{min} [mm]		
		Without drilling aid	With drilling aid	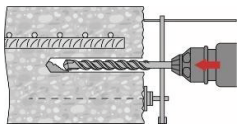
Hammer drilling **(HD) and (HDB)**	ϕ < 25	$30 + 0{,}06 \cdot l_v \geq 2 \cdot \phi$	$30 + 0{,}02 \cdot l_v \geq 2 \cdot \phi$	
	ϕ ≥ 25	$40 + 0{,}06 \cdot l_v \geq 2 \cdot \phi$	$40 + 0{,}02 \cdot l_v \geq 2 \cdot \phi$	
Compressed air drilling **(CA)**	ϕ < 25	$50 + 0{,}08 \cdot l_v$	$50 + 0{,}02 \cdot l_v$	
	ϕ ≥ 25	$60 + 0{,}08 \cdot l_v \geq 2 \cdot \phi$	$60 + 0{,}02 \cdot l_v \geq 2 \cdot \phi$	

Drilling and cleaning diameters

Rebar [mm]	Hammer drill (HD)	Hollow Drill Bit (HDB) [b)]	Compressed air drill (CA)	Brush HIT-RB	Air nozzle HIT-RB
	d_0 [mm]			size [mm]	
			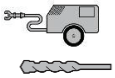		
ϕ8	12 / 10 [a)]	12	-	12 / 10 [a)]	12 / 10 [a)]
ϕ10	14 / 12 [a)]	14 / 12 [a)]	-	14 / 12 [a)]	14 / 12 [a)]
ϕ12	16 / 14 [a)]	16 / 14 [a)]	-	16 / 14 [a)]	16 / 14 [a)]
	-	-	17	18	16
ϕ14	18	18	17	18	18
ϕ16	20	20	-	20	20
	-	-	20	22	20
ϕ18	22	22	22	22	22
ϕ20	25	25	-	25	25
	-	-	26	28	25
ϕ22	28	28	28	28	28
ϕ24	32	32	32	32	32
ϕ25	32	32	32	32	
ϕ26	35	-	35	35	
ϕ28	35	-	35	35	
ϕ30	-	-	35	35	
	37	-	-	37	
ϕ32	40	-	40	40	

a) Maximum installation length l=250 mm.
b) No cleaning required

Dispensers and corresponding maximum embedment depth $\ell_{v,max}$

Rebar	Dispenser	
	HDM 330, HDM 500, HDE 500	HDE 500
	Concrete temp. ≥ -10°C	Concrete temp. ≥ 0°C
	$\ell_{v,max}$ [mm]	$\ell_{v,max}$ [mm]
ϕ8 - ϕ32	700	1000

Setting instructions

***For detailed information on installation see instruction for use given with the package of the product.**



Safety regulations.

Review the Material Safety Data Sheet (MSDS) before use for proper and safe handling! Wear well-fitting protective goggles and protective gloves when working with Hilti HIT-HY 200.

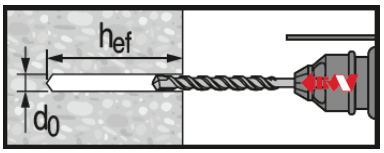

Hammer drilled hole (HD)

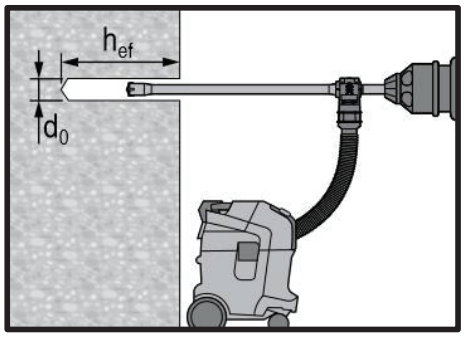

Hammer drilled hole with Hollow Drilled Bit (HDB)

No cleaning required

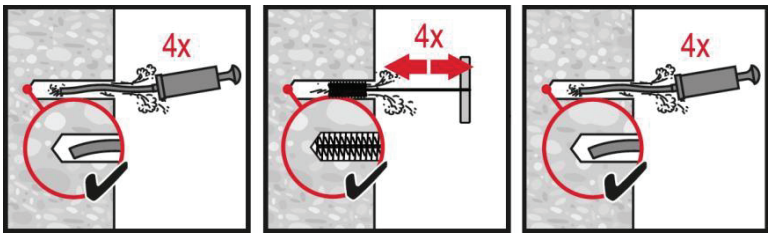

Manual cleaning (MC)
for drill diameters $d_0 \leq 20$ mm and drill hole depth $h_0 \leq 10 \cdot d$.

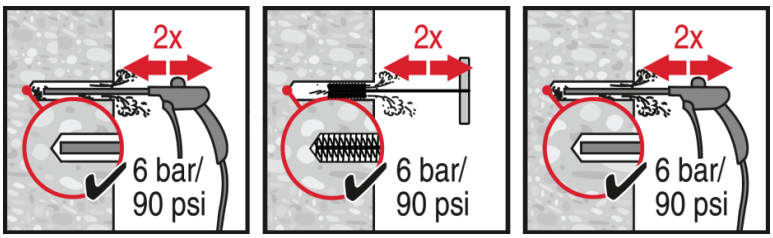

Compressed air cleaning (CAC)
for all drill hole diameters d_0 and drill hole depths $h_0 \leq 20 \cdot d$.

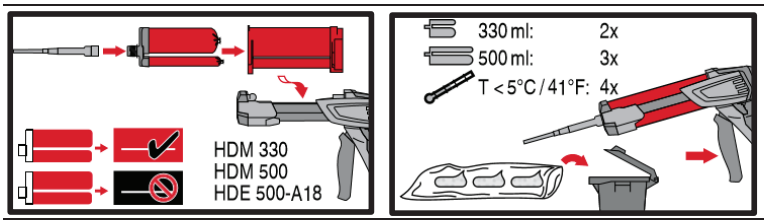

Injection system preparation.

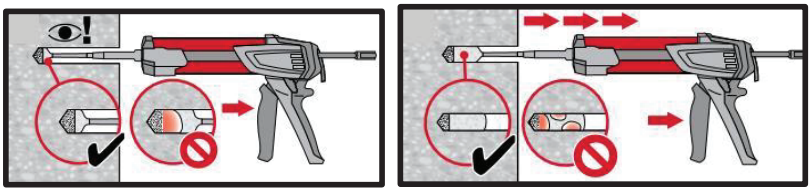

Injection method for drill hole depth $h_{ef} \leq 250$ mm.

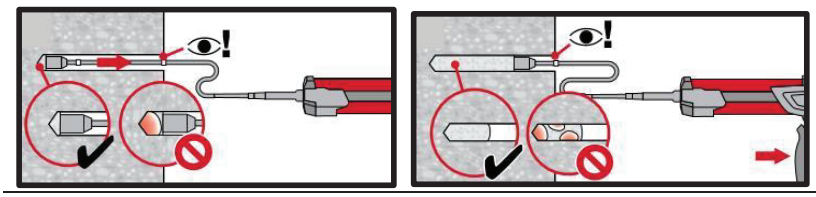

Injection method for drill hole depth $h_{ef} > 250$mm.

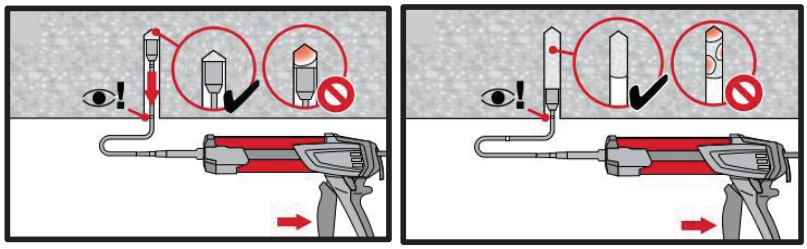

Injection method for overhead application.

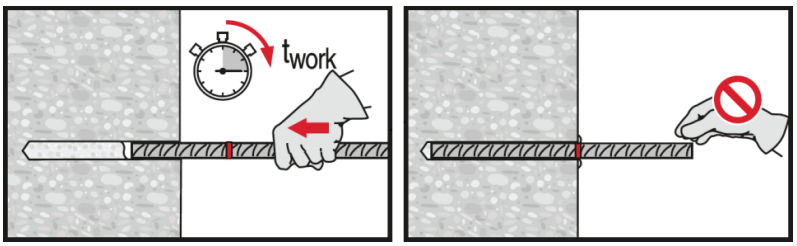

Setting element, observe working time "t_{work}".

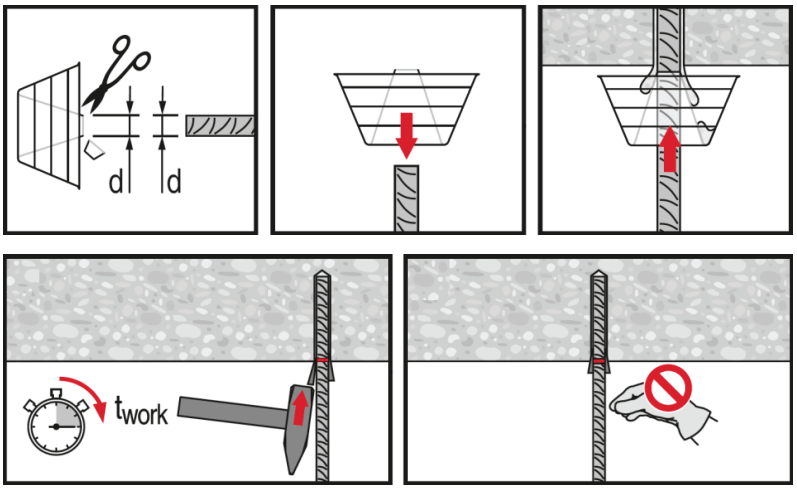

Setting element for overhead applications, observe working time "t_{work}".

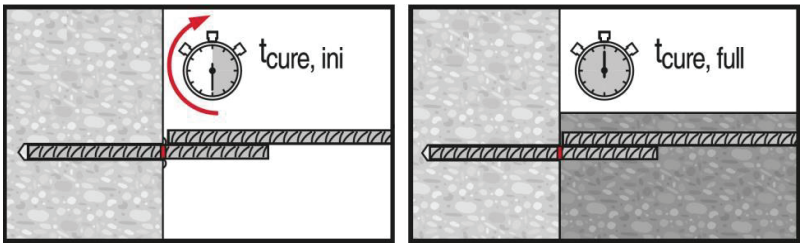

Apply full load only after curing time "t_{cure}".

SUBMITTALS IDENTIFICATION SHEET

PROJECT: Wastewater Treatment Plant Upgrade
Iqaluit, Nunavut

NUNAMI
STANTEC LIMITED

1088C Noble House
Iqaluit NU
www.stantec.com

CONTRACTOR: Kudlik Construction Ltd, Project 2018-062

Telephone: 867-979-1166

E-mail: srousseau@kudlik.biz

SUBCONTRACTOR:

Person responsible:

Telephone: () E-mail:

PRODUCT SUBMITTED:

☑ As Specified

☐ Alternate

SUPPLIER or MANUFACTURER: Atelier de mecanique Boivin

2200 Rue Lavoisier, Québec, QC G1N 4B3

Person responsible: Richard

Telephone: 418-928-3696 E-mail: richard@mecboivin.com

DESCRIPTION OF SUBMITTAL: CCN-005 stainless plate

# of pages:

Reference to drawings:

Reference to specs:

Division: 05 Section: 05 50 00

REMARKS:

REVIEW AND COMMENTS (for use by Consultants):

STANTEC PROJECT #: 110126045 SUBMITTAL # SU-029

This review by Stantec is for general conformance with the design concept of Stantec's design of the:

☐ Process ☐ Electrical
☑ Structural ☐ Other
☐ Mechanical

component(s) only and does not mean that Stantec has verified or approves the shop drawing(s). The Contractor remains solely responsible for the shop drawing(s) and this review by Stantec does not relieve the Contractor of the Contractor's responsibility for errors or omissions in the shop drawing(s) or for meeting all requirements of the contract documents. This review does not mean that Stantec approves the detailed design inherent in the shop drawing, responsibility for which shall remain with the Contractor submitting same, nor does this review mean that Stantec accepts any deviation of the shop drawing(s) from the contract documents. The Contractor is responsible for confirming all dimensions and correlating them at the job site, for all construction means, methods and techniques, and for coordination of construction work of all trades, including coordination of all shop drawings.

Stantec

☑ REVIEWED

☐ REVIEWED, AS NOTED

☐ REVISE AND RESUBMIT

☐ NOT REVIEWED

DATE September 14, 2018

BY Zachary Paquin

Review of this submission is for compliance with general intent of the contract. This review does not relieve the Sub-Contractor, Supplier or Manufacturer of responsibility for error or omissions in the submission or the responsibility of meeting all requirements of the contract documents. Any deviation from the contract documents initiated by the Sub-Contractor, Supplier or Manufacturer shall be at their sole risk. QUANTITIES AND DETAIL DIMENSIONS ARE THE SUB-CONTRACTORS OR SUPPLIERS RESPONSIBILITY. VERIFY DATA WITH FIELD DIMENSIONS.

SUBMITTAL TRACKING No.: **SU-029**

2018-09-14

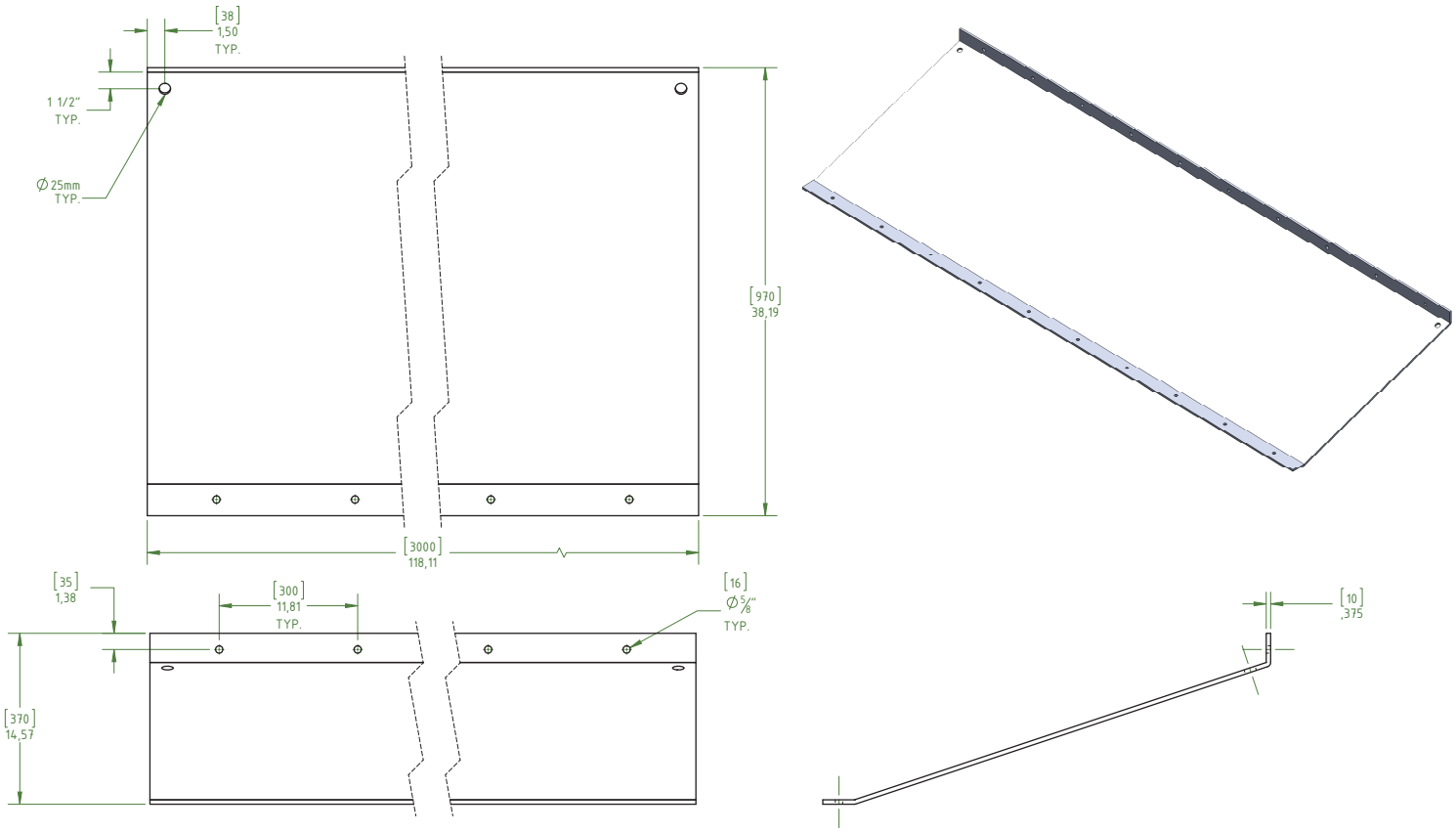

DESSINÉ PAR ALEX BOIVIN
Fabrication D'engrenages
Usinage de Précision
Soudure Générale
Conception/Fabrication Mécanique
Tél: 418-527-1350
Fax: 418-527-1485
E-mail: alex@mecboivin.com

TITRE: WASTEWATER PLANT	TOLÉRANCES SAUF SI SPÉCIFIÉ: X ±1,00; .XX ±0,10; .XXX ±0,01; FRACTION ±1/64; ANGULAIRE ±1/2°	THERMIQUE: T.THERM		CLIENT	13/09/2018
		DESSINÉ: 1	FINI	PROJET	DÉTAILLÉ: 1 DE 2
	MATÉRIAU: S/S 316-MF	UNITÉS: POUCES		ÉCHELLE: 1/2"=1"	

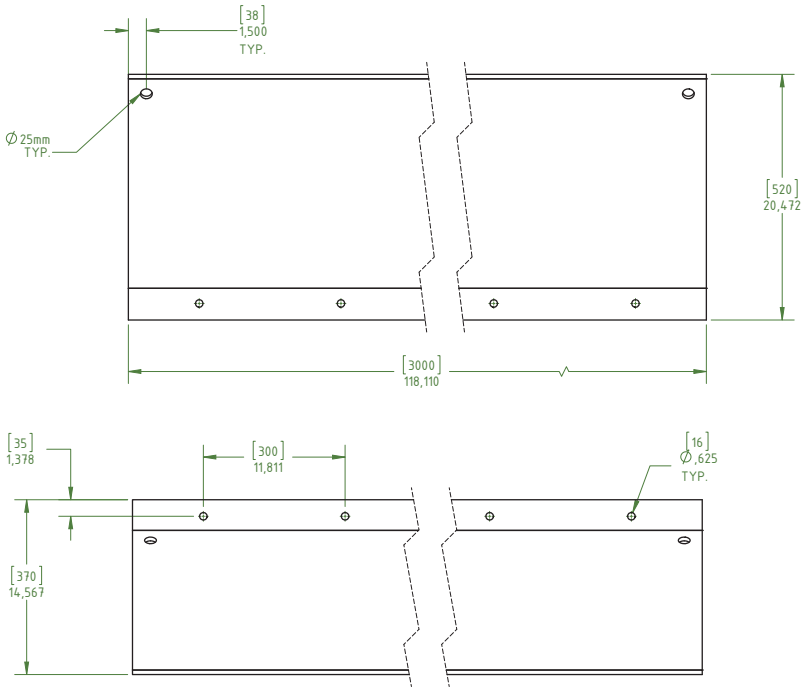

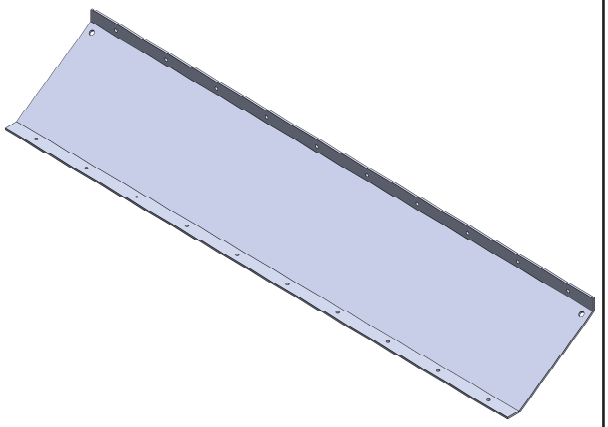

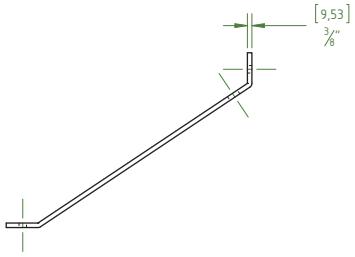

DESSINÉ PAR ALEX BOIVIN
Fabrication D'engrenages
Usinage de Précision
Soudure Générale
Conception/Fabrication Mécanique
Tél: 418-527-1350
Fax: 418-527-1485
E-mail: alex@mecboivin.com

WASTEWATER PLAN	T.THERM	CLIENT		13/09/2018
	1	FINI	PROJET	2 DE 2
S/S 316-MF	POUCES	1/2"=1"		

SUBMITTALS IDENTIFICATION SHEET

PROJECT: Wastewater Treatment Plant Upgrade
Iqaluit, Nunavut

CONTRACTOR: Kudlik Construction Ltd, Project 2018-062

Telephone: 867-979-1166

E-mail: srousseau@kudlik.biz

SUBCONTRACTOR:

Person responsible:

Telephone: () E-mail:

PRODUCT SUBMITTED:

☐ As Specified

☐ Alternate

SUPPLIER or MANUFACTURER: Schendel

20310 – 107 avenue

Edmonton, Alberta, Canada T5S 1W9

Person responsible: Monica Schendel

Telephone: (780)447-3400 E-mail:

DESCRIPTION OF SUBMITTAL: AV Components

# of pages:

Reference to drawings: 6/A424

Reference to specs:

Division: 33 Section: 33 11 18

REMARKS:

REVIEW AND COMMENTS (for use by Consultants):

STANTEC PROJECT #: 110126045

SUBMITTAL # 001

This review by Stantec is for general conformance with the design concept of Stantec's design of the:

☐ Architectural ☐ Structural ☐ Mechanical ☐ Electrical ☑ Other Civil

component(s) only and does not mean that Stantec has verified or approves the shop drawing(s). The Contractor remains solely responsible for the shop drawing(s) and this review by Stantec does not relieve the Contractor of the Contractor's responsibility for errors or omissions in the shop drawing(s) or for meeting all requirements of the contract documents. This review does not mean that Stantec approves the detailed design inherent in the shop drawing, responsibility for which shall remain with the Contractor submitting same, nor does this review mean that Stantec accepts any deviation of the shop drawing(s) from the contract documents. The Contractor is responsible for confirming all dimensions and correlating them at the job site, for all construction means, methods and techniques, and for coordination of construction work of all trades, including coordination of all shop drawings.

Stantec

☑ REVIEWED

☐ REVIEWED, AS NOTED

☐ REVISE AND RESUBMIT

☐ NOT REVIEWED

DATE 2018-06-05

BY Matt Follett

Review of this submission is for compliance with general intent of the contract. This review does not relieve the Sub-Contractor, Supplier or Manufacturer of responsibility for error or omissions in the submission or the responsibility of meeting all requirements of the contract documents. Any deviation from the contract documents initiated by the Sub-Contractor, Supplier or Manufacturer shall be at their sole risk. QUANTITIES AND DETAIL DIMENSIONS ARE THE SUB-CONTRACTORS OR SUPPLIERS RESPONSIBILITY. VERIFY DATA WITH FIELD DIMENSIONS.

SUBMITTAL TRACKING No.: **CIVIL-001**

2018-05-28

SCHENDEL MECHANICAL CONTRACTING LTD.
20310 -107 Avenue
Edmonton, Alberta, Canada T5S 1W9
Phone: 780-447-3400 Fax: 780-447-4313

SHOP DRAWINGS

RE: IQALUIT WWTP UPGRADE ACCESS VAULTS	
OWNER:	City of Iqaluit
PRIME CONSULTANT:	Nunami Stantec Ltd.
GENERAL CONTRACTOR:	Kudlik Construction Ltd.
ACCESS VAULT CONTRACTOR:	Schendel Mechanical Contracting Ltd.
MANUFACTURERS:	Kitz, MAS, Victaulic, Anvil, Clow, Thunderline,
PRODUCTS:	Ball Valves, Butterfly Valves, Couplings, Flanges, Fittings, Hydrant, Linkseals
SPECIFICATION SECTION:	33 11 18

DESCRIPTION:

Components used in Access Vaults, AV-213, AV-213-A, AV-213-B, AV-213-C, AV-2143-D, AV-213-E, AV-213-F

1 Kitz Forged Brass Ball Valve (1/2", 1", 2") Code #58 (AKSZA) Threaded Reviewed/Approved
2 MA Stewart & Sons Valves, G Series – 2" SS Ball Valve in lieu of 2" gate valve Reviewed/Approved
3 Kitz 4" (and 8") Butterfly Valve in lieu of Gate Valve Reviewed/Approved
4 Vitaulic Style 77 Reviewed/Approved
- a. Housing Coating Optional Hot dipped galvanized & others Reviewed/Approved
- b. Gasket Grade E EPDM Reviewed/Approved
- c. 4" Vitaulic Style 77 DN100 Reviewed/Approved
- d. 8" Vitaulic Style 77 DN 200 Reviewed/Approved

5 Vitaulic Vic-Flange Adapters Style 741 Reviewed/Approved
- a. Hot dipped galvanized Reviewed/Approved
- b. Vitaulic Grade "E" EPDM Reviewed/Approved
- c.4" DN 100 Style 741 Reviewed/Approved
- d. 8" DN200 Style 741 Reviewed/Approved

6 Vitaulic Grooved End Fittings Reviewed/Approved
- a. Fitting - Standard: Ductile Iron conforming to ASTMA536, Grade 65-45-12 Reviewed/ Approved
- b. Fitting Coating – Standard: Orange enamel Reviewed/Approved
- c. Dimensions Reviewed/Approved

7 Cast Iron Flanged Fittings Class 125 Reviewed/Approved
- a.Pressure rating Reviewed/Approved

8 Clow / McAvity Hydrant Reviewed/Approved

SHOP DRAWINGS NO. 001

Reviewed By: Monica Schendel
Date: May 25, 2018

Schendel Mechanical Contracting Ltd.

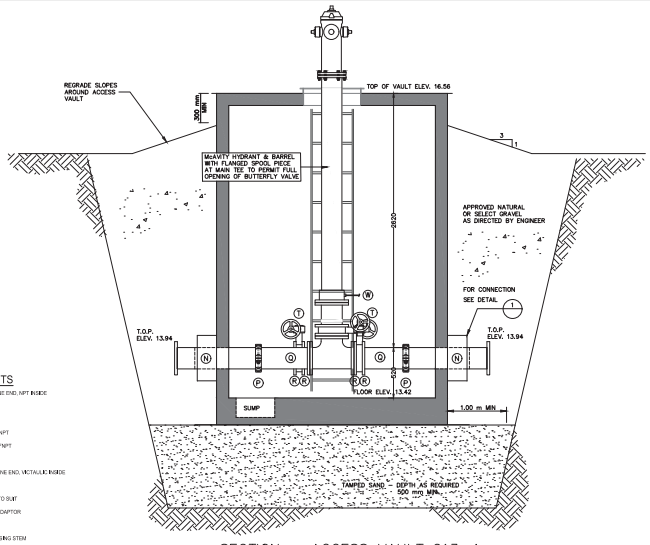

SECTION – ACCESS VAULT 213–A

SCALE: 1:20

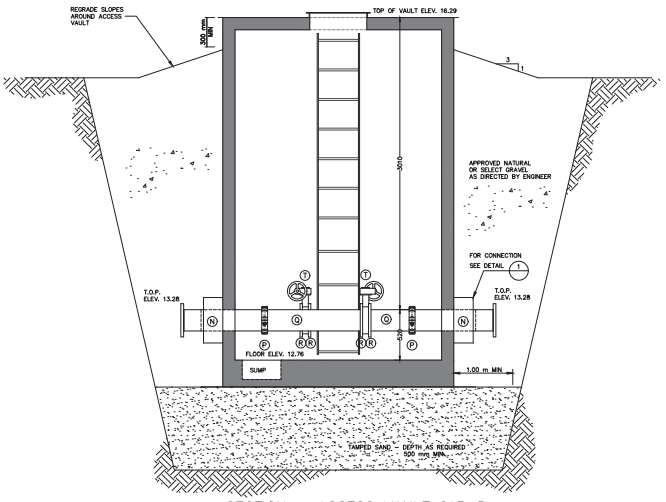

SECTION – ACCESS VAULT 213–B

SCALE: 1:20

LIST OF COMPONENTS

- (A) 50 mm STEEL TRANSITION, FLANGED ONE END, NPT INSIDE
- (B) 50 mm STAINLESS STEEL UNION, FNPT
- (C) 50 mm STAINLESS STEEL NIPPLE, MNPT
- (D) 50 mm STAINLESS STEEL ELBOW, 90°, FNPT
- (E) 50 mm STAINLESS STEEL GATE VALVE, FNPT
- (F) 50 mm STAINLESS STEEL WELDOLET
- (G) 100 mm STEEL TRANSITION, FLANGED ONE END, VICTAULIC INSIDE
- (H) 100 mm VICTAULIC STYLE 77 COUPLER
- (J) 100 mm STEEL SPOOL PIECE, LENGTH TO SUIT
- (K) 100 mm VICTAULIC STYLE 741 FLANGE ADAPTOR
- (L) 100 mm VICTAULIC ELBOW, 90 °
- (M) 100 mm GATE VALVE, FLANGED, NON-RISING STEM
- (N) 200 mm STEEL TRANSITION, FLANGED ONE END, VICTAULIC INSIDE
- (P) 200 mm VICTAULIC STYLE 77 COUPLER
- (Q) 200 mm STEEL SPOOL PIECE, LENGTH TO SUIT
- (R) 200 mmVICTAULIC STYLE 741 FLANGE ADAPTOR
- (S) 200 mm VICTAULIC ELBOW, 90°
- (T) 200 mm BUTTERFLY VALVE, LUG BODY WI HANDWHEEL & GEAR OPER
- (U) 200 mm VICTAULIC CAP, No 69 (BLIND FLANGE)
- (V) 50 mm x 50 mm x 50 mm TEE, IPT
- (W) GARDEN HOSE ATTACHED TO HYDRANT DRAIN PORT TO SUMP
- (Z) 200 mm TEE, FLANGED

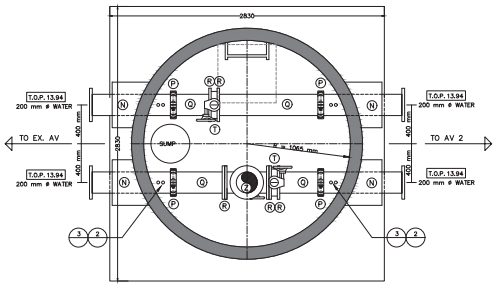

PLAN – ACCESS VAULT 213–A

SCALE: 1:20

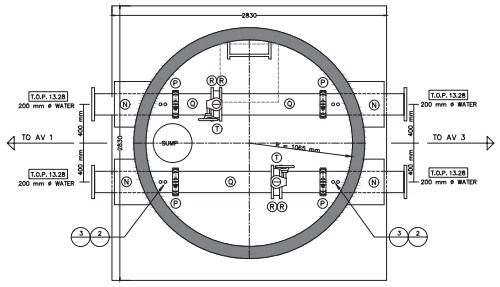

PLAN – ACCESS VAULT 213–B

SCALE: 1:20

Revision	By	Appd.	YY.MM.DD
ISSUED/DESIGN REVIEW	NF	QAP	15.03.09
Issued	By	Appd.	YY.MM.DD

Consultants

Permit-Seal

PERMIT TO PRACTICE
NUNAMI STANTEC LTD.
Signature
Date 26 APR 2017
PERMIT NUMBER: P 1117
NT/NU Association of Professional Engineers and Geoscientists

NUNAVUT TERRITORY PROFESSIONAL ENGINEER M.H. POLLETT 17367 REGISTERED

NUNAMI
STANTEC LIMITED

1088C Noble House
Iqaluit NU
www.stantec.com

The Contractor shall verify and be responsible for all dimensions. DO NOT scale the drawing - any errors or omissions shall be reported to Stantec without delay.
The Copyrights to all designs and drawings are the property of Stantec. Reproduction or use for any purpose other than that authorized by Stantec is forbidden.

Client/Project
Iqaluit
ᐃᖃᓗᐃᑦ
IQALUIT WASTEWATER TREATMENT PLANT UPGRADE
City of Iqaluit, Nunavut

File Name: C504v007.dwg	ICM: Dwn.	WO: Chkd.	MF: Dsgn.	15.02.28 YY.MM.DD

Title
CIVIL
ACCESS VAULTS 1 & 2
PLAN & SECTION

Project No.	Scale
1101126045	N.T.S.
Drawing No.	Sheet / Revision
C504	7 of 10 / 0

ORIGINAL SHEET - ISO A1

\\Cd1091-c02v01.ca.amecfw.com\Documents_and_Settings\All Users\Desktop\Working\01-Civil\Current\C502-507.dwg
2015/04/08, 9:21 PM, By: Mathieu, Ian

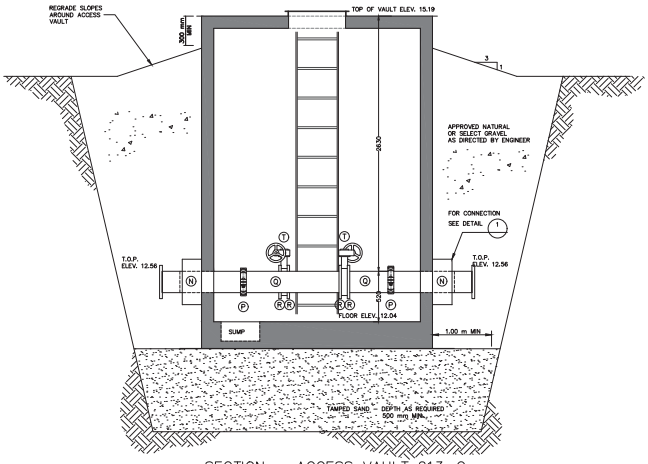

SECTION – ACCESS VAULT 213–C

SCALE: 1:20

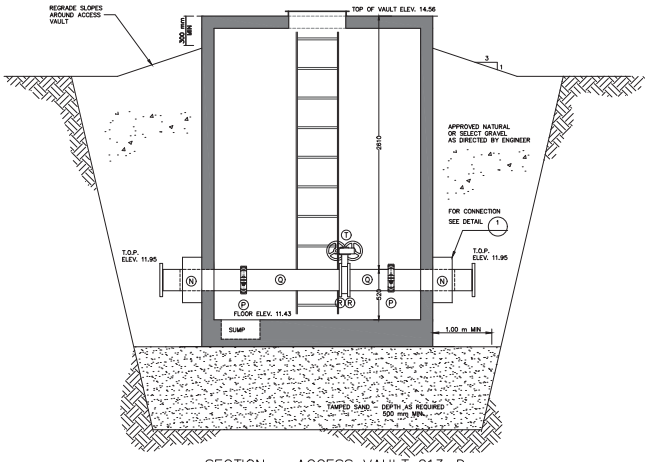

SECTION – ACCESS VAULT 213–D

SCALE: 1:20

LIST OF COMPONENTS

- (A) 50 mm STEEL TRANSITION, FLANGED ONE END, NPT INSIDE
- (B) 50 mm STAINLESS STEEL UNION, FNPT
- (C) 50 mm STAINLESS STEEL NIPPLE, MNPT
- (D) 50 mm STAINLESS STEEL ELBOW, 90°, FNPT
- (E) 50 mm STAINLESS STEEL GATE VALVE, FNPT
- (F) 50 mm STAINLESS STEEL WELDOLET
- (G) 100 mm STEEL TRANSITION, FLANGED ONE END, VICTAULIC INSIDE
- (H) 100 mm VICTAULIC STYLE 77 COUPLER
- (J) 100 mm STEEL SPOOL PIECE, LENGTH TO SUIT
- (K) 100 mm VICTAULIC STYLE 741 FLANGE ADAPTOR
- (L) 100 mm VICTAULIC ELBOW, 90 °
- (M) 100 mm GATE VALVE, FLANGED, NON-RISING STEM
- (N) 200 mm STEEL TRANSITION, FLANGED ONE END, VICTAULIC INSIDE
- (P) 200 mm VICTAULIC STYLE 77 COUPLER
- (Q) 200 mm STEEL, SPOOL PIECE, LENGTH TO SUIT
- (R) 200 mm VICTAULIC STYLE 741 FLANGE ADAPTOR
- (S) 200 mm VICTAULIC ELBOW, 90°
- (T) 200 mm BUTTERFLY VALVE, LUG BODY W/ HANDWHEEL & GEAR OPERATOR
- (U) 200 mm VICTAULIC CAP, No 60 (BLIND FLANGE)
- (V) 50 mm x 50 mm x 50 mm TEE, RPT
- (W) GARDEN HOSE ATTACHED TO HYDRANT DRAIN PORT TO SUMP
- (Z) 200 mm TEE, FLANGED

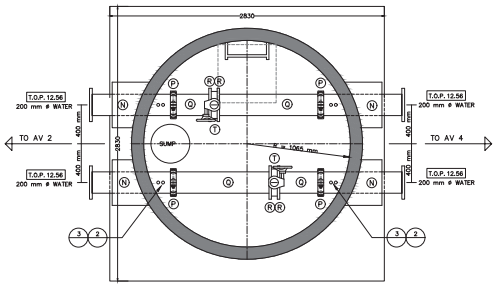

PLAN – ACCESS VAULT 213–C

SCALE: 1:20

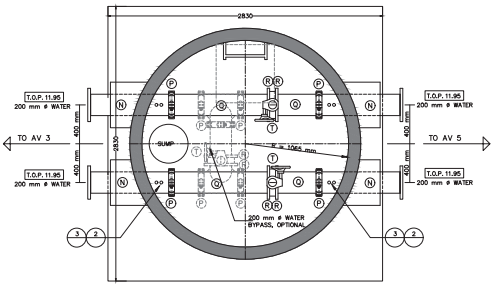

PLAN – ACCESS VAULT 213–D

SCALE: 1:20

Revision	By	Appd.	YY.MM.DD
ISSUED FOR REVIEW	MF	QAP	18.03.09
Issued	By	Appd.	YY.MM.DD

Consultants

Permit-Seal

PERMIT TO PRACTICE
NUNAMI STANTEC LTD.
Signature
Date 26 APR 2018
PERMIT NUMBER: P 1117
NT/NU Association of Professional Engineers and Geoscientists

NUNAMI
STANTEC LIMITED

1088C Noble House
Iqaluit NU
www.stantec.com

The Contractor shall verify and be responsible for all dimensions. DO NOT scale the drawing - any errors or omissions shall be reported to Stantec without delay.
The Copyrights to all designs and drawings are the property of Stantec. Reproduction or use for any purpose other than that authorized by Stantec is forbidden.

Client/Project

Iqaluit

IQALUIT WASTEWATER TREATMENT PLANT UPGRADE

City of Iqaluit, Nunavut

File Name: C505-007.dwg	IQal	WO	MF	18.02.28
	Dwn.	Chkd.	Dsgn.	YY.MM.DD

Title

CIVIL
ACCESS VAULTS 3 & 4
PLAN & SECTION

Project No.	Scale	
1101126045	N.T.S.	
Drawing No.	Sheet	Revision
C505	8 of 10	0

ORIGINAL SHEET - ISO A1

\\Qal01pw-s2201\shared_projects\110126045\active\civil\drawings\01-civil\current\C505-007.dwg
2018/04/26, 5:21 PM, By: Mathieu, Ian

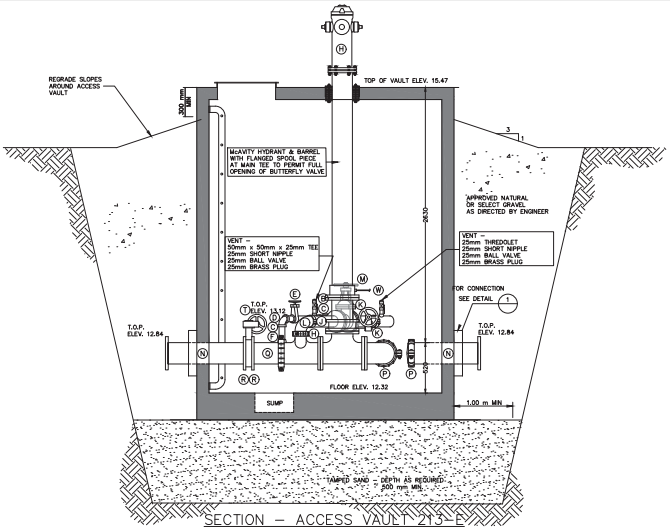

SECTION – ACCESS VAULT 213–E

SCALE: N.T.S.

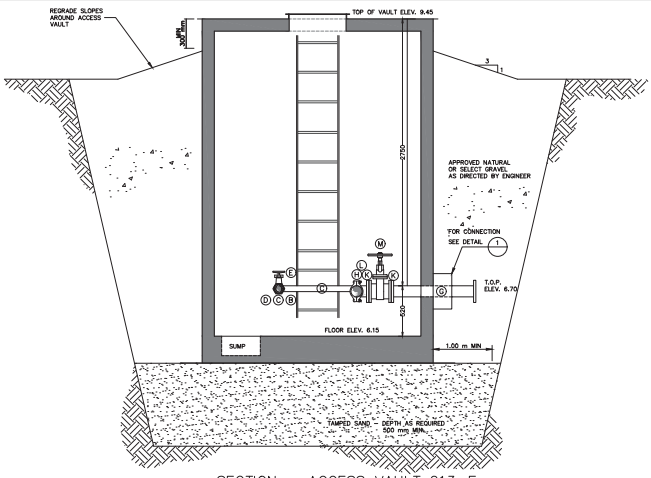

SECTION – ACCESS VAULT 213–F

SCALE: N.T.S.

LIST OF COMPONENTS

- (A) 50 mm STEEL TRANSITION, FLANGED ONE END, NPT INSIDE
- (B) 50 mm STAINLESS STEEL, UNION, FNPT
- (C) 50 mm STAINLESS STEEL NIPPLE, MNPT
- (D) 50 mm STAINLESS STEEL, ELBOW, 90°, FNPT
- (E) 50 mm STAINLESS STEEL, GATE VALVE, FNPT
- (F) 50 mm STAINLESS STEEL, WELDOLET
- (G) 100 mm STEEL TRANSITION, FLANGED ONE END, VICTAULIC INSIDE
- (H) 100 mm VICTAULIC STYLE 77 COUPLER
- (J) 100 mm STEEL SPOOL PIECE, LENGTH TO SUIT
- (K) 100 mm VICTAULIC STYLE 741 FLANGE ADAPTOR
- (L) 100 mm VICTAULIC ELBOW, 90 °
- (M) 100 mm GATE VALVE, FLANGED, NON-RISING STEM
- (N) 200 mm STEEL TRANSITION, FLANGED ONE END, VICTAULIC INSIDE
- (P) 200 mm VICTAULIC STYLE 77 COUPLER
- (Q) 200 mm STEEL, SPOOL PIECE, LENGTH TO SUIT
- (R) 200 mm VICTAULIC STYLE 741 FLANGE ADAPTOR
- (S) 200 mm VICTAULIC ELBOW, 90°
- (T) 200 mm BUTTERFLY VALVE, LUG BODY W/ HANDWHEEL & GEAR OPERATOR
- (U) 200 mm VICTAULIC CAP, No 60 (BLIND FLANGE)
- (V) 50 mm x 50 mm x 50 mm TEE, RPT
- (W) GARDEN HOSE ATTACHED TO HYDRANT DRAIN PORT TO SUMP
- (Z) 200 mm TEE, FLANGED

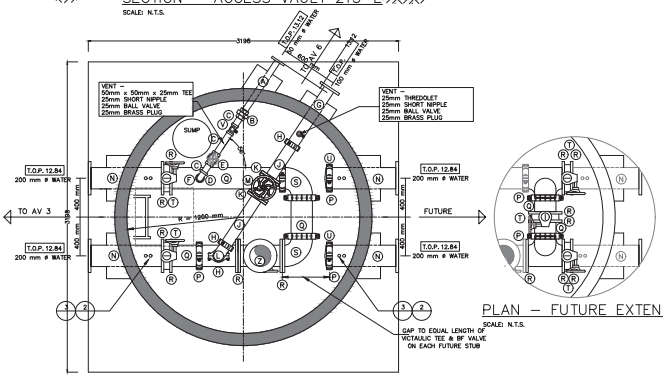

PLAN – ACCESS VAULT 213–E

SCALE: N.T.S.

PLAN – FUTURE EXTENSION

SCALE: N.T.S.

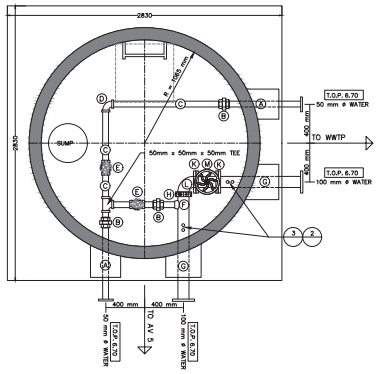

PLAN – ACCESS VAULT 213–F

SCALE: N.T.S.

Revision	By	Appd.	YY.MM.DD
ISSUED FOR REVIEW	NF	GAP	15.03.09
Issued	By	Appd.	YY.MM.DD

Consultants

Permit-Seal

PERMIT TO PRACTICE
NUNAMI STANTEC LTD.
Signature
Date 26 MAR 2015
PERMIT NUMBER: P 1117
NT/NU Association of Professional Engineers and Geoscientists

NUNAMI
STANTEC LIMITED
1088C Noble House
Iqaluit NU
www.stantec.com

The Contractor shall verify and be responsible for all dimensions. DO NOT scale the drawing - any errors or omissions shall be reported to Stantec without delay.
The Copyrights to all designs and drawings are the property of Stantec. Reproduction or use for any purpose other than that authorized by Stantec is forbidden.

Client/Project
Iqaluit
ᐃᖃᓗᐃᑦ
IQALUIT WASTEWATER TREATMENT PLANT UPGRADE
City of Iqaluit, Nunavut

File Name: C506-007.dwg	IQal	WO	NF	15.02.28
	Dwn.	Chkd.	Dsgn.	YY.MM.DD

Title
CIVIL
ACCESS VAULTS 5 & 6
PLAN & SECTION

Project No.	Scale	
110126045	N.T.S.	
Drawing No.	Sheet	Revision
C506	9 of 10	0

ORIGINAL SHEET - ISO A1

\\CD1091-C2001\shared_projects\110126045\Workflow\Workflow\01-civil\current\C5002-5010.dwg
2015/03/26, 9:23 PM, By: Mathieu, Ian

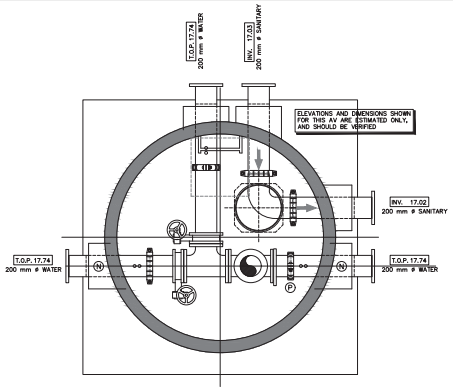

PLAN – EX. ACCESS VAULT 213

SCALE: 1:20

LIST OF COMPONENTS

- (A) 50 mm STEEL TRANSITION, FLANGED ONE END, NPT INSIDE
- (B) 50 mm STAINLESS STEEL UNION, FNPT
- (C) 50 mm STAINLESS STEEL NIPPLE, MNPT
- (D) 50 mm STAINLESS STEEL ELBOW, 90°, FNPT
- (E) 50 mm STAINLESS STEEL GATE VALVE, FNPT
- (F) 50 mm STAINLESS STEEL WELDOLET
- (G) 100 mm STEEL TRANSITION, FLANGED ONE END, VICTAULIC INSIDE
- (H) 100 mm VICTAULIC STYLE 77 COUPLER
- (J) 100 mm STEEL SPOOL PIECE, LENGTH TO SUIT
- (K) 100 mm VICTAULIC STYLE 741 FLANGE ADAPTOR
- (L) 100 mm VICTAULIC ELBOW, 90 °
- (M) 100 mm GATE VALVE, FLANGED, NON-RISING STEM
- (N) 200 mm STEEL TRANSITION, FLANGED ONE END, VICTAULIC INSIDE
- (P) 200 mm VICTAULIC STYLE 77 COUPLER
- (Q) 200 mm STEEL, SPOOL PIECE, LENGTH TO SUIT
- (R) 200 mm VICTAULIC STYLE 741 FLANGE ADAPTOR
- (S) 200 mm VICTAULIC ELBOW, 90°
- (T) 200 mm BUTTERFLY VALVE, LUG BODY W/ HANDWHEEL & GEAR OPERATOR
- (U) 200 mm VICTAULIC CAP, No 60 (BLIND FLANGE)
- (V) 50 mm x 50 mm x 50 mm TEE, RPT
- (W) GARDEN HOSE ATTACHED TO HYDRANT DRAIN PORT TO SUMP
- (Z) 200 mm TEE, FLANGED

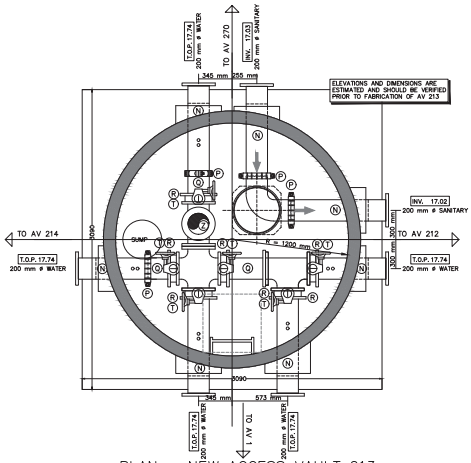

PLAN – NEW ACCESS VAULT 213

SCALE: 1:20

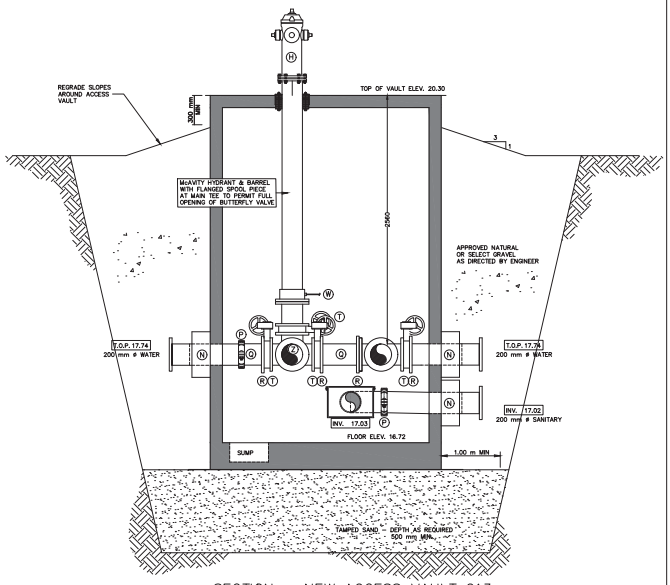

SECTION – NEW ACCESS VAULT 213

SCALE: 1:20

Revision	By	Appd.	YY.MM.DD
ISSUED/DESIGN REVIEW	NF	QAP	15.03.09
Issued	By	Appd.	YY.MM.DD

Consultants

Permit-Seal

PERMIT TO PRACTICE
NUNAMI STANTEC LTD.
Signature
Date 26 APR 2017
PERMIT NUMBER: P 1117
NT/NU Association of Professional Engineers and Geoscientists

NUNAVUT PROFESSIONAL ENGINEER M.H. SPOLLETT 11345 NT/NU

NUNAMI
STANTEC LIMITED

1088C Noble House
Iqaluit NU
www.stantec.com

The Contractor shall verify and be responsible for all dimensions. DO NOT scale the drawing - any errors or omissions shall be reported to Stantec without delay.
The Copyrights to all designs and drawings are the property of Stantec. Reproduction or use for any purpose other than that authorized by Stantec is forbidden.

Client/Project
Iqaluit
ᐃᖃᓗᐃᑦ

IQALUIT WASTEWATER TREATMENT PLANT UPGRADE

City of Iqaluit, Nunavut

File Name: C507-007.dwg	ICM Dwn.	WO Chkd.	NF Dsgn.	15.02.28 YY.MM.DD

Title
CIVIL
NEW ACCESS VAULT AV 213
PLAN & SECTION

Project No.	Scale
1101260045	N.T.S.
Drawing No.	Sheet
C507	10 of 10
	Revision 0

ORIGINAL SHEET - ISO A1

\\Ca1011-c32v01\current_projects\1101260045\Workflow\Workspace\01-civil\current\C500-507.dwg
2015/04/06, 5:53 PM, By: Mathieu, Ian

FORGED BRASS BALL VALVE

MAINTENANCE FREE DOUBLE O-RING STEM SEALS

Two Piece Body • Full Port • Chrome Plated / Vented Ball
Blowout Proof Stem (Ni Plated) • PTFE Seats
CSA (US/C) • UL • FM

CODE # 58 (AKSZA)
THREADED

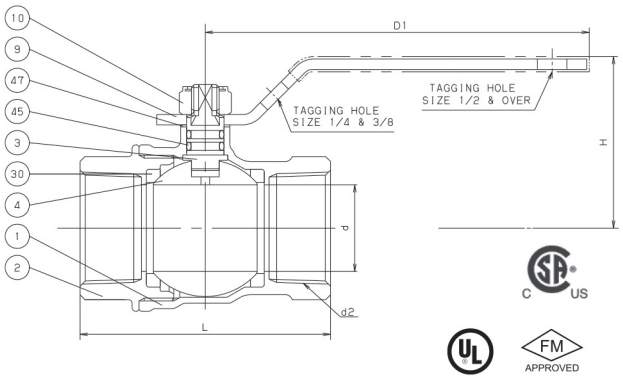

CODE # 59 (CSZA)
SOLDER*

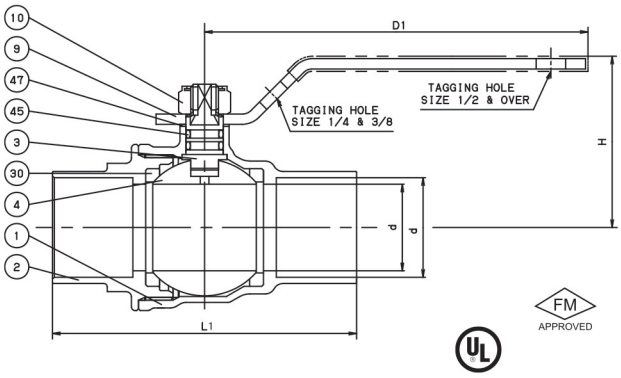

**REFERENCE VALVE INSTALLATION TIPS FOR SOUND SOLDER JOINTS (PAGE BV-70) OR SEE INSTALLATION SHEET PACKAGED WITH VALVE.*

STANDARDS	
END TO END	KITZ
THREADED ENDS	ANSI B1.20.1
SOLDER JOINT ENDS	ANSI B16.18
WALL THICKNESS	KITZ
CONFORMS TO MSS-SP 110 - REPLACES US. FED.	
SPEC. WWW-V-35B, TYPE II, CLASS A, STYLE 3	

PRESSURE/TEMPERATURE
150 PSI SATURATED STEAM TO 366ºF
600 PSI - NON-SHOCK COLD WATER, OIL OR GAS

NOTE: PRESSURE/TEMPERATURE CHART - PAGE BV-35

MATERIAL LIST		
NO.	NAME OF PART	SPECIFICATION
1	BODY	FORGED BRASS (B283, C37700)
2	BODY CAP	FORGED BRASS (B283, C37700)
3	STEM	(1) BRASS ROD (B16)
4	BALL (Vented)	(2) FORGED BRASS (B283, C37700) STRAIGHT OR HOLLOW BALL
9	HANDLE	(3) CARBON STEEL
10	HANDLE NUT	CARBON STEEL
30	BALL SEATS	PTFE
45	O-RINGS	FPM
47	THRUST WASHER	PBT

NOTES:
(1) Ni PLATING
(2) CR. PLATING
(3) ELECTROPLATED ZINC WITH PLASTIC COVERING

DIMENSIONS • WEIGHTS • QUANTITIES

	d2 SIZE	d	H	D1	L	L1	d1 Max.	d1 Min.	APPROX. NET WT.	CARTON QTY
in.	1/4	0.39	1.46	2.76	1.65	1.05	.381	.377	29	120
mm.		9.9	37.1	70.1	41.9	26.7	9.7	9.6	13.2	
in.	3/8	0.39	1.46	2.76	1.65	1.11	.506	.502	29	120
mm.		9.9	37.1	70.1	41.9	28.2	12.9	12.8	13.2	
in.	1/2	0.59	1.57	3.15	2.08	1.13	.631	.627	29	96
mm.		14.0	39.9	80.0	52.8	28.7	16.0	15.9	13.2	
in.	3/4	0.79	1.69	3.15	2.36	1.37	.881	.877	45	60
mm.		20.1	42.9	80.0	59.9	34.8	22.4	22.3	20.5	
in.	1	0.98	1.97	4.33	2.83	1.64	1.132	1.128	60	36
mm.		24.9	50.0	50.038	71.9	41.7	28.8	28.7	27.3	
in.	1 1/4	1.26	2.16	4.33	3.31	2	1.382	1.378	68	24
mm.		32.0	54.9	54.864	84.1	50.8	35.1	35.0	30.9	
in.	1 1/2	1.57	2.52	5.9	3.62	2.35	1.633	1.628	50	16
mm.		39.9	64.0	149.9	91.9	59.7	41.5	41.4	22.7	
in.	2	1.97	2.83	5.9	4.33	2.83	2.133	2.128	71	16
mm.		50.0	71.9	149.9	149.86	71.9	54.2	54.1	32.3	

SPECIFICATION

Approved valve shall have two piece forged brass body, blowout proof stem (Ni Plated), PTFE seats, maintenance free double o-ring stem seals, chrome plated ball and full port design. Valves shall be pressure rated to 150 WSP/600 WOG and conform to MSS-SP 110 and certified to CSA, UL & FM.

KITZ Code No. 58 (AKSZA) Threaded Ends
59 (CSZA) Solder Ends

CERTIFICATIONS:

CSA (US/C) -40ºC~65ºC (-40ºF~149ºF)
CGA 9.1b-2001/ANSI 21.15b-2006 - .5 PSI
CGA CR 91-002 - 2 PSI
ASME B16.44 - 5 PSI
CAN/CGA 3.16-M88 - 125 PSI
ASME B16.33-2002 - 125 PSI
UL-258 - 175 WWP (Fire Trim Protection Valves)
FM-1140 - 175 WWP (Fire Protection Systems)

M. A. Stewart & Sons Ltd.
VALVES AND FITTINGS

G Series Investment Cast Stainless Steel 1000 WOG Ball Valves

G2E

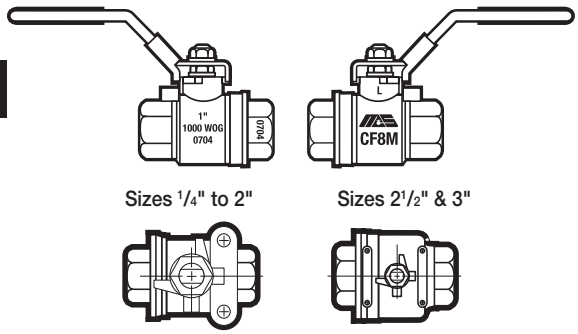

Sizes 1/4" to 2" | Sizes 2 1/2" & 3"



- Full port
- NPT ends to ANSI B1.20.1
- Two piece body
- Blowout-proof stem
- Adjustable packing nut
- Locking lever handle
- Floating ball
- Complies with NACE MR-0103 & Supplier Requirements of NACE MR-0175/ISO 15156
- 1000 PSI, WOG 1/4" to 3"
- P-T 100 PSI @ 450°F

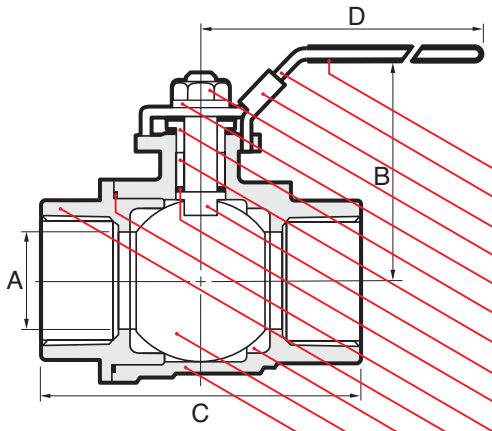

NAME / MATERIAL
1. Handle Grip / Vinyl
2. Handle / Stainless Steel A276 Type 304
3. Locking Device / Stainless Steel A276 Type 304
4. Handle Nut / Stainless Steel A276 Type 304
5. Stem Washer / Stainless Steel A276 Type 304
6. Gland Nut / Stainless Steel A276 Type 304
7. Packing / R-PTFE 15% Glass-Filled
8. Stem / Stainless Steel A276 Type 316
9. Thrust Washer / R-PTFE 15% Glass-Filled
10. Gasket / R-PTFE 15% Glass-Filled
11. Cap / Stainless Steel A351 - CF8M (316)
12. Seat / R-PTFE 15% Glass-Filled
13. Ball / Stainless Steel A351 - CF8M (316)
14. Body / Stainless Steel A351 - CF8M (316)

2" SS Ball Valve in lieu of 2" Gate Valve

DIMENSIONS

size	8	10	15	20	25	32	40	50	65	80
mm/in	1/4	3/8	1/2	3/4	1	1 1/4	1 1/2	2	2 1/2	3
A	9.6	9.6	12.7	20.0	24.0	31.8	38.1	50.0	65.0	78.0
mm/in	0.378	0.378	0.500	0.787	0.945	1.252	1.50	1.968	2.559	3.071
B	54.0	54.0	54.6	64.8	67.8	79.4	84.4	100.7	135.0	145.00
mm/in	2.126	2.126	2.150	2.551	2.669	3.126	3.323	3.965	5.315	5.709
C	49.4	49.4	56.0	66.0	77.7	90.4	102.4	119.0	151.4	171.4
mm/in	1.945	1.945	2.205	2.598	3.059	3.559	4.031	4.685	5.961	6.748
D	98.0	98.0	98.0	122.0	122.0	152.0	152.0	178.0	247.0	247.0
mm/in	3.858	3.858	3.858	4.803	4.803	5.984	5.984	7.008	9.724	9.724
CV	7.0	7.0	15.0	45.0	65.0	125.0	175.0	380.0	500.0	900.0
weights	0.20	0.21	0.235	0.43	0.63	1.11	1.49	2.60	5.42	8.38
kg/lb	0.440	0.462	0.517	0.946	1.386	2.442	3.278	5.720	11.924	18.436

PRESSURE TEMPERATURE RATING

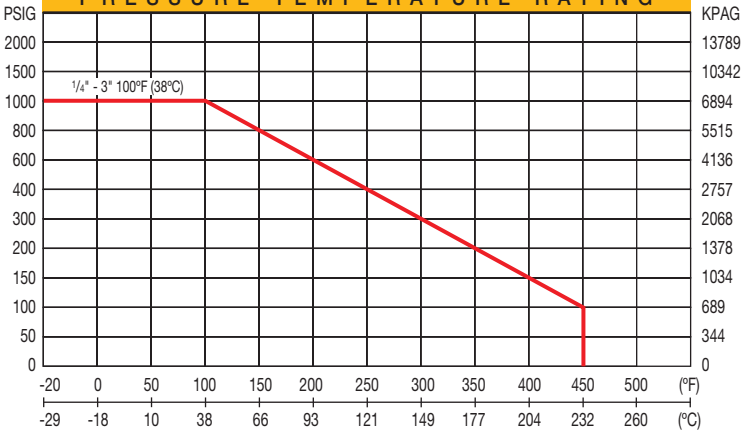

Technical data, dimensions, materials & specifications are subject to change without notice.

4" Butterfly Valve in lieu of Gate Valve
- Schendel Mech. May 25/18

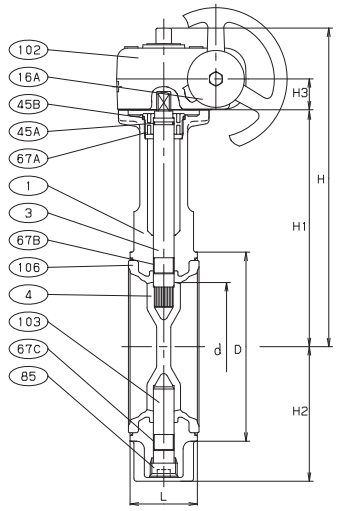

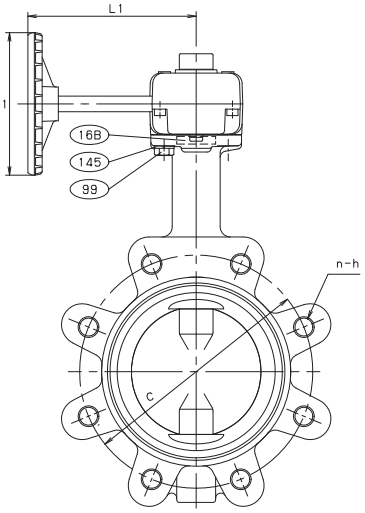

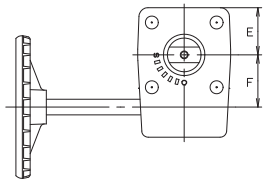



GEAR TYPE:No.0

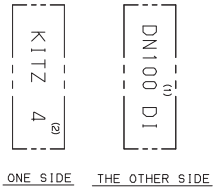

ONE SIDE THE OTHER SIDE

MARKING ON THE BODY

DIMENSIONS. UNIT:mm

NOMINAL SIZE									END CONNECTION							GEAR UNIT		
NPS	DN	d	H	H1	H2	H3	L	D	C	h	n	D1	L1	E	F	TYPE		
2	50	50	194	147	67	18.5	42.9	90	120.5	5/8-11UNC	4	80	121.5	29	28	NO.0		
2.1/2	65	65	202	155	75	18.5	46	104	139.5	5/8-11UNC	4	80	121.5	29	28	NO.0		
3	80	80	236	173	91	24	46	124	152.5	5/8-11UNC	4	110	135	36.5	40.5	NO.1		
4	100	100	246	183	104	24	52.3	146	190.5	5/8-11UNC	8	110	135	36.5	40.5	NO.1		
5	125	125	274	211	127	24	55.6	176	216	3/4-10UNC	8	110	150	36.5	40.5	NO.1		
6	150	150	286	223	139	24	55.6	206	241.5	3/4-10UNC	8	110	150	36.5	40.5	NO.1		
8	200	197	325	248	169	32	60.5	257	298.5	3/4-10UNC	8	170	180	51	63	NO.2		

NOTE (1) VALVE SIZE (DN) IDENTIFICATION.
(2) VALVE SIZE (NPS) IDENTIFICATION.
(3) CHROMATE COATING.
(4) VULCANIZED TO THE BODY.
(5) THE VALVES ARE RATED FOR DEAD END SERVICE WITH THE DOWN STREAM FLANGED REMOVE AT 200PSI 2"-8".
(6) THE LINE PAINTED ON TOP OF THE STEM INDICATES THE DISC DIRECTION.

KITZ

NO.	NAME OF PARTS	QTY	MATERIALS	SPECIFICATION EQUIV. ASTM	EQUIV. ASTM
1	BODY	1	DUCTILE IRON	A536	⟶
3	STEM	1	STAINLESS STEEL	A276 TYPE410	⟶
4	DISC	1	ALUMINUM-BRONZE		
16A	NAME PLATE	1	ALUMINUM		
16B	NAME PLATE	1	ALUMINUM		
45A	O RING	1		NBR	EPDM
45B	O RING	1		NBR	EPDM
67A	BEARING	1	POLYACETAL		
67B	STEM BEARING	1	G/F PTFE		
67C	STEM BEARING	1	G/F PTFE		
85	PLUG	1	ZINC DIE-CAST (3)		
99	SET BOLT	4	CARBON STEEL		
102	GEAR UNIT	1			
103	BOTTOM STEM	1	STAINLESS STEEL	A276 TYPE410	⟶
106	SEAT RUBBER (4)	1		NBR	EPDM
145	SPRING WASHER	4	CARBON STEEL		

FIGURE		☐ G-200DJLA	☐ G-200DJLAE
MAS MODEL No.		6122BG	6122EG
STANDARD	FACE TO FACE OR END TO END	MSS SP67	
	END CONNECTION	LUG TYPE (ASME B 16.5 CL.150)	
	WALL THICKNESS	KITZ STANDARD	
	PRESSURE TEST	KITZ STANDARD	

NSF/ANSI 372

200psi DUCTILE IRON
BUTTERFLY VALVES

GEAR OPERATED.

DATE APPD	MAR.02.'16	DRAWING NO	△			
APPD BY	T. KOYANAGI	947-B10107 REV-04	△			
CHKD BY	H. NAKAGAWA		△			
DSGND BY	F. AKAHANE		△			
DRAWD BY	Y. ASAKAWA		MARK	DATE	BY	

KITZ CORPORATION

Victaulic® Standard Flexible Coupling Style 77

06.04



¾ – 12"/DN20 – DN300 sizes



14 – 24"/DN350 – DN600 sizes

1.0 PRODUCT DESCRIPTION

Available Sizes

- ¾ – 24"/DN20 – DN600

Maximum Working Pressure

- Accommodates pressures ranging from full vacuum (29.9 in Hg/760 mm Hg) up to 1000 psi/6894 kPa.
- Working pressure dependent on material, wall thickness and size of pipe.

Application

- Joins standard roll grooved and cut grooved pipe, as well as grooved fittings, valves and accessories.
- Provides a flexible pipe joint with allows for expansion, contraction and deflection.
- Operating temperature dependent upon gasket and/or seal selection - see Section 3.0.
- Exclusively for use with pipe and Victaulic products which feature ends formed with the Victaulic OGS groove profile (See section 7.0 for Reference Materials).

Pipe Material

- Carbon steel.
- For use with stainless steel pipe, refer to Victaulic publication 17.09 for pressure ratings and end loads.

2.0 CERTIFICATION/LISTINGS

NOTE

- See publication 02.06: Victaulic Potable Water Approvals ANSI/NSF for potable water approvals if applicable.

ALWAYS REFER TO ANY NOTIFICATIONS AT THE END OF THIS DOCUMENT REGARDING PRODUCT INSTALLATION, MAINTENANCE OR SUPPORT.

System No.		Location	
Submitted By		Date	

Spec Section		Paragraph	
Approved		Date	

 © 2017 Victaulic Company. All rights reserved.

3.0 MATERIAL SPECIFICATIONS

Housing: Ductile iron conforming to ASTM A536, Grade 65-45-12. Ductile iron conforming to ASTM A395, Grade 65-45-15, is available upon special request.

Housing Coating: (specify choice)

- ☐ Standard: Orange enamel.
- ☐ Optional: Hot dipped galvanized and others.
- ☐ Optional: Contact Victaulic with your requirements for other coatings.

Gasket: (specify choice[1])

- ☐ **Grade "E" EPDM**
  EPDM (Green stripe color code). Temperature range –30°F to +230°F/–34°C to +110°C. May be specified for cold and hot water service within the specified temperature range plus a variety of dilute acids, oil-free air and many chemical services. UL Classified in accordance with ANSI/NSF 61 for cold +73°F/+23°C and hot +180°F/+82°C potable water service and ANSI/NSF 372. NOT COMPATIBLE FOR PETROLEUM SERVICES OR STEAM SERVICES.
- ☐ **Grade "T" Nitrile**
  Nitrile (Orange stripe color code). Temperature range -20°F to +180°F/-29°C to +82°C. May be specified for petroleum products, air with oil vapors, vegetable and mineral oils within the specified temperature range. Not compatible for hot water services over +150°F/+66°C or for hot dry air over +140°F/+60°C.
- ☐ **Others**
  For alternate gasket selection, reference publication 05.01: Victaulic Seal Selection Guide - Elastomeric Seal Construction.

[1] Services listed are General Service Guidelines only. It should be noted that there are services for which these gaskets are not compatible. Reference should always be made to the latest Victaulic Seal Selection Guide for specific gasket service guidelines and for a listing of services which are not compatible.

Bolts/Nuts: (specify choice[2])

- ☐ Standard: Carbon steel oval neck track bolts meeting the mechanical property requirements of ASTM A449 (imperial) and ISO 898-1 Class 9.8 (metric). Carbon steel hex nuts meeting the mechanical property requirements of ASTM A563 Grade B (imperial - heavy hex nuts) and ASTM A563M Class 9 (metric - hex nuts). Track bolts and hex nuts are zinc electroplated per ASTM B633 ZN/FE5, finish Type III (imperial) or Type II (metric).
- ☐ Optional: Stainless steel oval neck track bolts meeting the mechanical property requirements of ASTM F593, Group 2 (316 stainless steel), condition CW. Stainless steel heavy hex nuts meeting the mechanical property requirements of ASTM F594, Group 2 (316 stainless steel), condition CW, with galling reducing coating.

[2] Optional bolts/nuts are available in imperial size only.

 © 2017 Victaulic Company. All rights reserved.

4.0 DIMENSIONS

Style 77

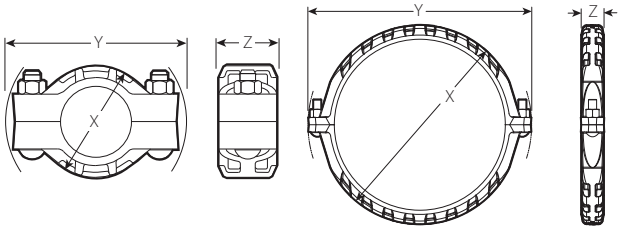

¾ – 12"/DN20 – DN300 sizes 14 – 24"/DN350 – DN600 sizes

Size		Pipe End Separation[3]	Deflection from Centerline[3]		Bolt/Nut		Dimensions			Weight
Nominal inches DN	Actual Outside Diameter inches mm	Allowable inches mm	Per Cplg. Degrees	Pipe inches/ft. mm/m	Qty.	Size inches	X inches mm	Y inches mm	Z inches mm	Approx. (Each) lb kg
¾ DN20	1.050 26.7	0–0.06 0–1.6	3°–24′	0.72 60	2	⅜ x 2	2.13 54	4.00 102	1.75 44	1.1 0.5
1 DN25	1.315 33.4	0–0.06 0–1.6	2°–43′	0.57 48	2	⅜ x 2	2.38 61	4.12 105	1.75 44	1.2 0.5
1¼ DN32	1.660 42.2	0–0.06 0–1.6	2°–10′	0.45 38	2	½ x 2½	2.65 67	5.00 127	1.88 48	2.0 0.9
1½ DN40	1.900 48.3	0–0.06 0–1.6	1°–56′	0.40 33	2	½ x 2½	3.13 79	5.38 137	1.88 48	2.1 1.0
2 DN50	2.375 60.3	0–0.06 0–1.6	1°–31′	0.32 26	2	½ x 2½	3.63 92	5.88 149	1.88 48	2.6 1.2
	2.664 57.0	0–0.06 0–1.6	1°–34′	0.33 27	2	½ x 2½	3.43 87	5.73 146	1.90 48	3.0 1.4
2½	2.875 73.0	0–0.06 0–1.6	1°–15′	0.26 22	2	½ x 2¾	4.25 108	6.50 165	1.88 48	3.1 1.4
DN65	3.000 76.1	0–0.06 0–1.6	1°–12′	0.26 22	2	½ x 2¾	4.38 111	6.63 168	1.88 48	3.2 1.5
3 DN80	3.500 88.9	0–0.06 0–1.6	1°–2′	0.22 18	2	½ x 2¾	5.00 127	7.13 181	1.88 48	3.7 1.7
3½ DN90	4.000 101.6	0–0.06 0–1.6	0°–54′	0.19 16	2	⅝ x 3¼	5.63 143	8.25 210	1.88 48	5.6 2.5
4 DN100	4.500 114.3	0–0.13 0–3.2	1°–36′	0.34 28	2	⅝ x 3¼	6.13 156	8.88 226	2.13 54	6.7 3.0
	4.250 108.0	0–0.13 0–3.2	1°–41′	0.35 29	2	16 x 82.5	6.00 152	8.63 219	2.13 54	11.0 5.0
5	5.563 141.3	0–0.13 0–3.2	1°–18′	0.27 23	2	2– ¾ x 4¼	7.75 197	10.65 270	2.13 54	10.6 4.8

[3] Allowable Pipe End Separation and Deflection figures show the maximum nominal range of movement available at each joint for standard **roll** grooved pipe. Figures for standard **cut** grooved pipe may be doubled. These figures are maximums; for design and installation purposes these figures should be reduced by: 50% for ¾ – 3 ½"/DN20 – DN90; 25% for 4"/DN100 and larger.

NOTE

- Metric thread size bolts are available (color coded gold) for all coupling sizes upon request. Contact Victaulic for details.

 © 2017 Victaulic Company. All rights reserved.

4.0 DIMENSIONS (Continued)

Style 77

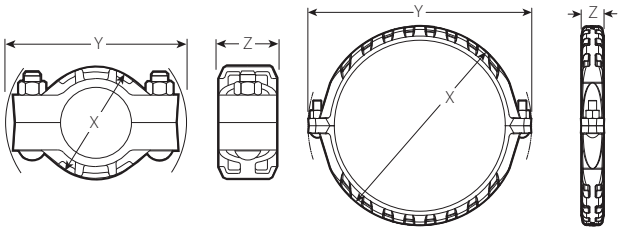

¾ – 12"/DN20 – DN300 sizes 14 – 24"/DN350 – DN600 sizes

Size		Pipe End Separation[3]	Deflection from Centerline[3]		Bolt/Nut		Dimensions			Weight
Nominal inches DN	Actual Outside Diameter inches mm	Allowable inches mm	Per Cplg. Degrees	Pipe inches/ft. mm/m	Qty.	Size inches	X inches mm	Y inches mm	Z inches mm	Approx. (Each) lb kg
	5.250 133.0	0–0.13 0–3.2	1°–21′	0.28 24	2	20 x 108	7.63 194	10.38 264	2.13 54	10.0 4.5
DN125	5.500 139.7	0–0.13 0–3.2	1°–18′	0.28 24	2	20 x 108	8.63 219	10.65 270	2.13 54	10.0 4.5
6 DN150	6.625 168.3	0–0.13 0–3.2	1°–5′	0.23 18	2	¾ x 4¼	8.63 219	11.88 302	2.13 54	12.0 5.4
	6.250 159.0	0–0.13 0–3.2	1°–9′	0.24 20	2	20 x 108	8.63 219	11.50 292	2.13 54	13.2 6.0
	6.500 165.1	0–0.13 0–3.2	1°–6′	0.23 19	2	¾ x 4¼	8.88 226	11.63 295	2.13 54	13.2 6.0
8[4] DN200	8.625 219.1	0–0.13 0–3.2	0°–50′	0.18 14	2	⅞ x 5	11.00 279	14.75 375	2.50 63	20.8 9.4
10[4] DN250	10.750 273.0	0–0.13 0–3.2	0°–40′	0.14 12	2	1 x 6	13.63 346	17.13 435	2.63 67	27.8 12.6
12[4] DN300	12.750 323.9	0–0.13 0–3.2	0°–34′	0.12 9	2	1 x 6½	15.63 397	19.25 489	2.63 67	31.1 14.1
14[5] DN350	14.000 355.6	0–0.13 0–3.2	0°–31′	0.11 9	2	1 x 3½	16.75 425	20.25 514	3.00 76	39.2 17.8
	14.842 377.0	0–0.13 0–3.2	0°–31′	0.11 9	2	1 x 3½	17.39 442	20.96 531	2.80 71	48.8 22.1
16[5] DN400	16.000 406.4	0–0.13 0–3.2	0°–27′	0.10 9	2	1 x 3½	18.75 476	22.25 565	3.00 76	45 20.4
	16.772 426.0	0–0.13 0–3.2	0°–27′	0.10 9	2	1 x 3½	19.69 500	22.92 581	2.92 74	56.7 25.7
18[5] DN450	18.000 457.2	0–0.13 0–3.2	0°–24′	0.08 7	2	1⅛ x 4	21.56 548	25.00 635	3.13 80	64.1 29.1
	18.898 480.0	0–0.13 0–3.2	0°–24′	0.08 7	2	1⅛ x 4	22.38 569	25.86 655	3.04 77	77.2 35

[3] Allowable Pipe End Separation and Deflection figures show the maximum nominal range of movement available at each joint for standard **roll** grooved pipe. Figures for standard **cut** grooved pipe may be doubled. These figures are maximums; for design and installation purposes these figures should be reduced by: 50% for ¾ – 3 ½"/DN20 – DN90; 25% for 4"/DN100 and larger.

[4] Couplings 8, 10, 12"/DN200, DN250, DN300 sizes available to JIS standards. Refer to Victaulic publication 06.17 for details.

[5] For 14 – 72"/DN350 – DN1800 Roll Groove systems Victaulic offers the Advanced Groove System (AGS) line of products. Refer to Victaulic publication 20.03 for information on the Style W77 flexible AGS coupling.

NOTE

- Metric thread size bolts are available (color coded gold) for all coupling sizes upon request. Contact Victaulic for details.

 © 2017 Victaulic Company. All rights reserved.

4.0 DIMENSIONS (Continued)

Style 77

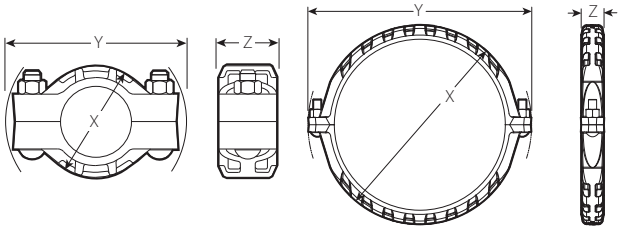

¾ – 12"/DN20 – DN300 sizes 14 – 24"/DN350 – DN600 sizes

Size		Pipe End Separation[3]	Deflection from Centerline[3]		Bolt/Nut		Dimensions			Weight
Nominal inches DN	Actual Outside Diameter inches mm	Allowable inches mm	Per Cplg. Degrees	Pipe inches/ft. mm/m	Qty.	Size inches	X inches mm	Y inches mm	Z inches mm	Approx. (Each) lb kg
20[5] DN500	20.000 508.0	0–0.13 0–3.2	0º–22′	0.08 7	2	1⅛ x 4	23.63 600	27.00 686	3.13 80	74.8 34
22[5] DN550	22.000 559.0	0–0.13 0–3.2	0º–19′	0.07 6	2	1⅛ x 4	25.63 651	29.13 740	3.13 80	82.6 37.5
	20.866 530.0	0–0.13 0–3.2	0º–22′	0.08 7	2	1⅛ x 4	24.29 617	27.80 704	3.07 77	91.7 41.6
	22.835 580.0	0–0.13 0–3.2	0º–19′	0.07 6	2	1⅛ x 4	26.76 680	30.01 762	3.12 79	92.8 42.2
24[5] DN600	24.000 609.6	0–0.13 0–3.2	0º–18′	0.07 6	2	1⅛ x 4	27.75 705	31.00 787	3.19 81	89.6 40.7
	24.803 630.0	0–0.13 0–3.2	0º–18′	0.07 6	2	1⅛ x 4	28.42 722	32.16 817	3.12 79	96.8 44
14–72 DN350– DN1800	**AGS See Style W77, refer to Victaulic** publication 20.03 AGS™									

[3] Allowable Pipe End Separation and Deflection figures show the maximum nominal range of movement available at each joint for standard **roll** grooved pipe. Figures for standard **cut** grooved pipe may be doubled. These figures are maximums; for design and installation purposes these figures should be reduced by: 50% for ¾ – 3 ½"/DN20 – DN90; 25% for 4"/DN100 and larger.

[5] For 14 – 72"/DN350 – DN1800 Roll Groove systems Victaulic offers the Advanced Groove System (AGS) line of products. Refer to Victaulic publication 20.03 for information on the Style W77 flexible AGS coupling.

NOTE

- Metric thread size bolts are available (color coded gold) for all coupling sizes upon request. Contact Victaulic for details.

 © 2017 Victaulic Company. All rights reserved.

5.0 PERFORMANCE

Style 77

Size		Working Pressure[6]	End Load[6]
Nominal inches DN	**Actual Outside Diameter** inches mm	**Maximum** psi kPa	**Maximum** lb N
¾ DN20	1.050 26.7	1000 6894	865 3,850
1 DN25	1.315 33.4	1000 6894	1360 6,050
1¼ DN32	1.660 42.2	1000 6894	2160 9,610
1½ DN40	1.900 48.3	1000 6894	2835 12,615
2 DN50	2.375 60.3	1000 6894	4430 19,715
	2.664 57.0	1000 6894	3955 17,592
2½	2.875 73.0	1000 6894	6490 28,880
DN65	3.000 76.1	1000 6894	7070 31,460
3 DN80	3.500 88.9	1000 6894	9620 42,810
3½ DN90	4.000 101.6	1000 6894	12565 55,915
4 DN100	4.500 114.3	1000 6894	15900 70,755
	4.250 108.0	1000 6894	14180 63,100
5	5.563 141.3	1000 6894	24300 108,135

[6] Working Pressure and End Load are total, from all internal and external loads, based on standard weight (ANSI) steel pipe, standard **roll** or **cut** grooved in accordance with Victaulic specifications. Contact Victaulic for performance on other pipe.

NOTE

- WARNING: FOR ONE TIME FIELD TEST ONLY, the Maximum Joint Working Pressure may be increased to 1½ times the figures shown.

 © 2017 Victaulic Company. All rights reserved.

5.0 PERFORMANCE (Continued)

Style 77

Size		Working Pressure[6]	End Load[6]
Nominal inches DN	**Actual Outside Diameter** inches mm	**Maximum** psi kPa	**Maximum** lb N
	5.250 133.0	1000 6894	21635 96,275
DN125	5.500 139.7	1000 6894	23745 105,665
6 DN150	6.625 168.3	1000 6894	34470 153,390
	6.250 159.0	1000 6894	30665 136,460
	6.500 165.1	1000 6894	33185 147,660
8[4] DN200	8.625 219.1	800 5515	46740 207,995
10[4] DN250	10.750 273.0	800 5515	73280 326,100
12[4] DN300	12.750 323.9	800 5515	102000 453,900
14[5] DN350	14.000 355.6	300 2068	46180 205,500
	14.842 377.0	300 2068	51875 230,845
16[5] DN400	16.000 406.4	300 2068	60320 268,425
	16.772 426.0	300 2068	66245 294,795
18[5] DN450	18.000 457.2	300 2068	76340 339,710
	18.898 480.0	300 2068	84105 374,265
20[5] DN500	20.000 508.0	300 2068	94000 418,300
22[5] DN550	22.000 559.0	300 2068	114000 507,300
	20.866 530.0	300 2068	102535 456,280
	22.835 580.0	300 2068	102380 455,591
24[5] DN600	24.000 609.6	250 1723	113000 502,850
	24.803 630.0	250 1723	102790 457,416
14–72 DN350–DN1800	**AGS See Style W77, refer to Victaulic** publication 20.03 AGS™		

4 Couplings 8, 10, 12"/DN200, DN250, DN300 sizes available to JIS standards. Refer to Victaulic publication 06.17 for details.

5 For 14 – 72"/DN350 – DN1800 Roll Groove systems Victaulic offers the Advanced Groove System (AGS) line of products. Refer to Victaulic publication 20.03 for information on the Style W77 flexible AGS coupling.

6 Working Pressure and End Load are total, from all internal and external loads, based on standard weight (ANSI) steel pipe, standard **roll** or **cut** grooved in accordance with Victaulic specifications. Contact Victaulic for performance on other pipe.

NOTE

- WARNING: FOR ONE TIME FIELD TEST ONLY, the Maximum Joint Working Pressure may be increased to 1½ times the figures shown.

 © 2017 Victaulic Company. All rights reserved.

6.0 NOTIFICATIONS

- For 14 – 72"/DN350 – DN1800 flexible roll groove systems, Victaulic recommends Style W77 AGS couplings. For more information, refer to Victaulic publication 20.03.

⚠ WARNING

- **Victaulic RX roll sets must be used when grooving light-wall/thin-wall stainless steel pipe for use with Victaulic Couplings.**

Failure to use Victaulic RX roll sets when grooving light-wall/thin-wall stainless steel pipe may cause joint failure, resulting in serious personal injury and/or property damage.

NOTICE

- **Victaulic RX grooving rolls must be ordered separately. They are identified by a silver color and the designation RX on the front of the roll sets.**

7.0 REFERENCE MATERIALS

02.06: Victaulic® Potable Water Approvals ANSI/NSF
05.01: Victaulic® Seal Selection Guide
06.15: Pressure Ratings and End Loads for Victaulic® Couplings on Steel Pipe
06.17: Victaulic® Couplings and Fittings for JIS Pipe
10.01: Victaulic® Products for Fire Protection Piping Systems - Regulatory Approval
17.01: Victaulic® Pipe Preparation for Use on Stainless Steel Pipe With Victaulic Products
17.09: Victaulic® Ductile Iron Grooved Couplings Performance Data for Stainless Steel Pipe
20.03: Victaulic® AGS Flexible Coupling Style W77
25.01: Victaulic® Original Groove System (OGS) Groove Specifications
26.01: Victaulic® Design Data
26.04: Victaulic® Couplings Vibration Attenuation Characteristics
26.12: Design Data for Seismic Applications of Victaulic® Grooved System
29.01: Victaulic® Terms and Conditions of Sale
I-100: Victaulic® Field Installation Handbook

User Responsibility for Product Selection and Suitability
Each user bears final responsibility for making a determination as to the suitability of Victaulic products for a particular end-use application, in accordance with industry standards and project specifications, and the applicable building codes and related regulations as well as Victaulic performance, maintenance, safety, and warning instructions. Nothing in this or any other document, nor any verbal recommendation, advice, or opinion from any Victaulic employee, shall be deemed to alter, vary, supersede, or waive any provision of Victaulic Company's standard conditions of sale, installation guide, or this disclaimer.

Intellectual Property Rights
No statement contained herein concerning a possible or suggested use of any material, product, service, or design is intended, or should be constructed, to grant any license under any patent or other intellectual property right of Victaulic or any of its subsidiaries or affiliates covering such use or design, or as a recommendation for the use of such material, product, service, or design in the infringement of any patent or other intellectual property right. The terms "Patented" or "Patent Pending" refer to design or utility patents or patent applications for articles and/or methods of use in the United States and/or other countries.

Note
This product shall be manufactured by Victaulic or to Victaulic specifications. All products to be installed in accordance with current Victaulic installation/assembly instructions. Victaulic reserves the right to change product specifications, designs and standard equipment without notice and without incurring obligations.

Installation
Reference should always be made to the Victaulic installation handbook or installation instructions of the product you are installing. Handbooks are included with each shipment of Victaulic products, providing complete installation and assembly data, and are available in PDF format on our website at www.victaulic.com.

Warranty
Refer to the Warranty section of the current Price List or contact Victaulic for details.

Trademarks
Victaulic and all other Victaulic marks are the trademarks or registered trademarks of Victaulic Company, and/or its affiliated entities, in the U.S. and/or other countries.

 © 2017 Victaulic Company. All rights reserved.

Victaulic® *Vic-Flange* Adapters
Styles 741 and 743



Style 741
2 – 12"/DN50 – DN300

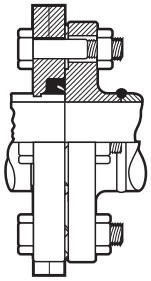

Exaggerated for clarity

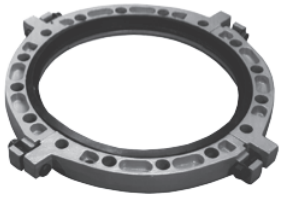

Style 741
14 – 24"/DN350 – DN600

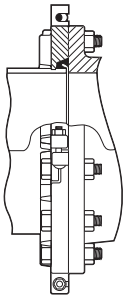

Exaggerated for clarity



Style 743
2 – 12"/DN50 – DN300

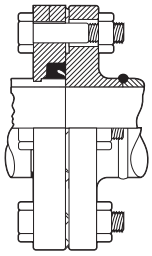

Exaggerated for clarity

1.0 PRODUCT DESCRIPTION

Available Sizes

- **Style 741:** 2 – 24"/DN50 – DN600
- **Style 743:** 2 – 12"/DN50 – DN300

Maximum Working Pressure

- **Style 741:** Up to 300 psi/2068 kPa/20 Bar
- **Style 743:** Up to 720 psi/4964 kPa/49 Bar

Application

- Designed to transition from flanged to grooved piping systems

Pipe Material

- Carbon steel
- For use with stainless steel pipe, refer to Victaulic publication 17.09 for pressure ratings and end loads.
- For use with PVC pipe, refer to Victaulic publication 32.01 for pressure ratings.
- For use with aluminum pipe, refer to Victaulic publication 21.04 for pressure ratings and end loads.

ALWAYS REFER TO ANY NOTIFICATIONS AT THE END OF THIS DOCUMENT REGARDING PRODUCT INSTALLATION, MAINTENANCE OR SUPPORT.

System No.		Location	
Submitted By		Date	

Spec Section		Paragraph	
Approved		Date	

© 2018 Victaulic Company. All rights reserved.

2.0 CERTIFICATION/LISTINGS

FM LPCB UL ULC VdS

NOTE

- See Victaulic publication 02.06: Victaulic Potable Water Approvals ANSI/NSF for potable water approvals if applicable.

3.0 SPECIFICATIONS - MATERIAL

Housing: Ductile iron conforming to ASTM A536, Grade 65-45-12. Ductile iron conforming to ASTM A395, Grade 65-45-15, is available upon special request.

Housing Coating: (specify choice)

☐ Standard: Black enamel.

☐ Optional: Hot dipped galvanized.

☐ Optional: Contact Victaulic with your requirements for other coatings.

Gasket: (specify choice[1])

☐ **Victaulic Grade "E" EPDM**
EPDM (Green stripe color code). Temperature range –30°F to +230°F/–34°C to +110°C. May be specified for hot water service within the specified temperature range plus a variety of dilute acids, oil-free air and many chemical services. UL Classified in accordance with ANSI/NSF 61 for cold +73°F/+23°C and hot +180°F/+82°C potable water service and ANSI/NSF 372. **NOT COMPATIBLE FOR USE WITH PETROLEUM SERVICES OR STEAM SERVICES.**

☐ **Victaulic Grade "T" Nitrile**
Nitrile (Orange stripe color code). Temperature range 20°F to +180°F/29°C to +82°C. May be specified for oil related services, including air with oil vapor, this gasket may be specified for temperatures rated up to +180°F/+82°C. For water related services, this gasket may be specified for temperatures rated up to +150°F/+66°C. For oil free, dry air services, this gasket may be specified for temperatures rated up to +140°F/+60°C. **NOT COMPATIBLE FOR USE WITH HOT WATER SERVICES OR STEAM SERVICES.**

☐ **Others**
For alternate gasket selection, reference publication 05.01: Victaulic Seal Selection Guide.

[1] Services listed are General Service Guidelines only. It should be noted that there are services for which these gaskets are not compatible. Reference should always be made to the latest Victaulic Seal Selection Guide for specific gasket service guidelines and for a listing of services which are not compatible.

Draw Bolts/Nuts (14 – 24"/DN350 – DN600 only):

☐ Carbon steel oval neck track bolts meeting the mechanical property requirements of ASTM A449 (imperial) and ISO 898-1 Class 9.8 (metric). Carbon steel hex flange nuts meeting the mechanical property requirements of ASTM A563 Grade B (imperial - heavy hex nuts) and ASTM A563M Class 9 (metric - hex nuts). Track bolts and hex flange nuts are zinc electroplated per ASTM B633 ZN/FE5, finish Type III (imperial) or Type II (metric).

 © 2018 Victaulic Company. All rights reserved.

4.0 DIMENSIONS

Style 741

2 – 12"/DN50 – DN300
ANSI Class 125 and 150 Flanges

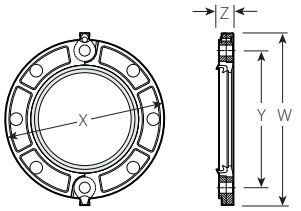

Shaded area of mating face must be free from gouges, undulations or deformities of any type for effective sealing.

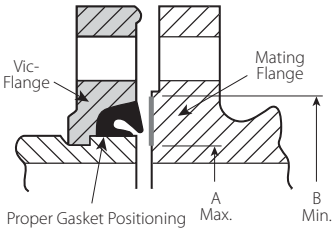

Exaggerated for clarity

Size		Assembly Bolt/Nut[2]		Sealing Surface		Dimensions				Weight
Nominal inches DN	Actual Outside Diameter inches mm	Qty.	Size inches	"A" Max. inches mm	"B" Min. inches mm	W inches mm	X inches mm	Y inches mm	Z inches mm	Approximate (Each) lb kg
2 DN50	2.375 60.3	4	⅝ x 2 ¾	2.38 60	3.41 87	6.75 172	6.00 152	4.75 121	0.75 19	3.1 1.4
2 ½	2.875 73.0	4	⅝ x 3	2.88 73	3.91 99	7.88 200	7.00 178	5.50 140	0.88 22	4.8 2.1
3 DN80	3.500 88.9	4	⅝ x 3	3.50 89	4.53 115	8.50 216	7.50 191	6.00 152	1.00 25	5.3 2.4
4 DN100	4.500 114.3	8	⅝ x 3	4.50 114	5.53 141	10.00 254	9.00 229	7.50 191	1.00 25	7.4 3.4
5	5.563 141.3	8	¾ x 3 ½	5.56 141	6.71 171	11.00 279	10.00 254	8.50 216	1.00 25	8.6 3.9
6 DN150	6.625 168.3	8	¾ x 3 ½	6.63 168	7.78 198	12.00 305	11.00 279	9.50 241	1.00 25	9.9 4.5
8 DN200	8.625 219.1	8	¾ x 3 ½	8.63 219	9.94 252	14.75 375	13.50 343	11.75 298	1.13 29	16.6 7.5
10 DN250	10.750 273.0	12	⅞ x 4	10.75 273	12.31 313	17.25 438	16.00 406	14.25 362	1.25 32	24.2 11.0
12 DN300	12.750 323.9	12	⅞ x 4	12.75 324	14.31 364	20.25 514	19.00 483	17.00 432	1.25 32	46.8 21.2

[2] Total assembly bolts required to be supplied by installer, may be ordered from Victaulic.

NOTE

- IMPORTANT: Style 741 *Vic-Flange* adapters provide rigid joints when used on pipe with standard cut or roll groove dimensions and consequently allow no linear or angular movement at the joint. When used with Victaulic Series 700 butterfly valves, plastic pipe or light wall metallic pipe, small teeth in I.D. of key section should be removed and may be used on one side of the valve. Contact Victaulic for information on ISO 2084 (PN10); DIN 2532 (PN10) and JIS B-2210 (10K) flanges.

 © 2018 Victaulic Company. All rights reserved.

6.0 NOTIFICATIONS

- The Style 741 (2 – 12"/DN50 – DN300) design incorporates small teeth inside the key shoulder I.D. to prevent rotation. These teeth should be removed when *Vic-Flange* adapter is utilized with a Victaulic Series 700 grooved-end butterfly valve, Schedule 5 pipe or plastic pipe. *Vic-Flange* adapter Style 741 may only be used on one side of Victaulic Series 700 butterfly valve, sizes 2 – 4"/DN50 – DN100 fitted with standard or latch-lock handles.
- *Vic-Flange* adapter must be assembled so it does not interfere with handle operation. Because of the outside flange dimension, *Vic-Flange* adapter should not be used within 90º of one another on a standard fitting. When wafer or lug-type valves are used adjoining a Victaulic fitting, check disc dimensions to assure proper clearance.
- *Vic-Flange* adapters should not be used as anchor points for tie-rods across nonrestrained joints. Mating rubber faced flanges, valves, etc. requires the use of a *Vic-Flange* washer.
- Area A-B noted in the above drawing must be free from gouges, undulations or deformities of any type for effective sealing.
- *Vic-Flange* adapter gaskets must always be assembled with the color coded lip on the pipe and the other lip facing the mating flange.
- *Vic-Flange* hinge points must be oriented approximately 90º to each other when mated.
- Flange Washers: *Vic-Flange* adapters require a smooth hard surface at the mating flange face for effective sealing. Some applications for which the *Vic-Flange* adapter is otherwise well suited do not provide an adequate mating surface. In such cases, it is recommended that a metal (Type F phenolic for Style 641 with copper systems) Flange Washer be inserted between the *Vic-Flange* adapter and the mating flange to provide the necessary sealing surface.
- Typical applications where a Flange Washer should be used are:
  A. When mating to a serrated flange: a flange gasket should be used adjacent to the serrated flange and then the Flange Washer is inserted between the *Vic-Flange* adapter and the flange gasket.
  B. When mating to a wafer valve: where typical valves are rubber lined and partially rubber faced (smooth or not), the Flange Washer is placed between the valve and the *Vic-Flange* adapter.
  C. When mating a rubber faced flange: the Flange Washer is placed between the *Vic-flanges* and the rubber faced flange.
  D. When mating AWWA cast flanges to IPS flanges: the Flange Washer or Transition Ring is placed between two *Vic-Flange* adapters with the hinge points oriented 90º to each other. If one flange is not a *Vic-Flange* adapter (e.g., flanged valve), then a flange gasket must be placed adjacent to that flange and the Flange Washer inserted between the flange gasket and the *Vic-Flange* adapter. Transition rings rather than Flange Washers must be used when mating Style 741 to Style 341 Flange Adapters in sizes 14 – 24"/DN350 – DN600.
  E. When mating to components (valves, strainers, etc.) where the component flange face has an insert: follow the same arrangement as in Application 1.
- When ordering Flange Washers, always specify product style (Style 741, 743, 341, 641, 994) and size to assure proper Flange Washer is supplied.

NOTE

- Style 741 is compatible with ANSI CL 125 or CL150, PN10/16 and Australian Standard Table E bolt hole patterns.

 © 2018 Victaulic Company. All rights reserved.

6.0 NOTIFICATIONS (Continued)

⚠ WARNING

- **Victaulic RX roll sets must be used when grooving light-wall/thin-wall stainless steel pipe for use with Victaulic Couplings.**

Failure to use Victaulic RX roll sets when grooving light-wall/thin-wall stainless steel pipe may cause joint failure, resulting in serious personal injury and/or property damage.

NOTICE

- **Victaulic RX grooving rolls must be ordered separately. They are identified by a silver color and the designation RX on the front of the roll sets.**

7.0 REFERENCE MATERIALS

02.06: Victaulic Potable Water Approvals
05.01: Victaulic Seal Selection Guide
10.01: Victaulic Regulatory Approval Reference Guide
17.01: Victaulic Pipe Preparation for Use on Stainless Steel Pipe With Victaulic Products
17.09: Victaulic Pressure Ratings and End Loads for Victaulic Ductile Iron Grooved Couplings on Stainless Steel Pipe
29.01: Victaulic Terms and Conditions/Warranty
1-100: Victaulic Field Installation Handbook

User Responsibility for Product Selection and Suitability
Each user bears final responsibility for making a determination as to the suitability of Victaulic products for a particular end-use application, in accordance with industry standards and project specifications, as well as Victaulic performance, maintenance, safety, and warning instructions. Nothing in this or any other document, nor any verbal recommendation, advice, or opinion from any Victaulic employee, shall be deemed to alter, vary, supersede, or waive any provision of Victaulic Company's standard conditions of sale, installation guide, or this disclaimer.

Intellectual Property Rights
No statement contained herein concerning a possible or suggested use of any material, product, service, or design is intended, or should be constructed, to grant any license under any patent or other intellectual property right of Victaulic or any of its subsidaries or affiliates covering such use or design, or as a recommendation for the use of such material, product, service, or design in the infringement of any patent or other intellectual property right. The terms "Patented" or "Patent Pending" refer to design or utility patents or patent applications for articles and/or methods of use in the United States and/or other countries.

Note
This product shall be manufactured by Victaulic or to Victaulic specifications. All products to be installed in accordance with current Victaulic installation/assembly instructions. Victaulic reserves the right to change product specifications, designs and standard equipment without notice and without incurring obligations.

Installation
Reference should always be made to the Victaulic installation handbook or installation instructions of the product you are installing. Handbooks are included with each shipment of Victaulic products, providing complete installation and assembly data, and are available in PDF format on our website at www.victaulic.com.

Warranty
Refer to the Warranty section of the current Price List or contact Victaulic for details.

Trademarks
Victaulic and all other Victaulic marks are the trademarks or registered trademarks of Victaulic Company, and/or its affiliated entities, in the U.S. and/or other countries.

 © 2018 Victaulic Company. All rights reserved.

Victaulic® Grooved End Fittings



No. 20 Tee



No. 10 Elbow

1.0 PRODUCT DESCRIPTION

Available Sizes

- ¾ – 60"/DN20 – DN1500

Maximum Working Pressure

- Pressure ratings for Victaulic standard fittings conform to the ratings of Victaulic Style 177N couplings (refer to publication 06.24 for more information).

Application

- Connects pipe, provides change in direction and adapts sizes or components
- Supplied with Victaulic OGS grooves
- Exclusively for use with Victaulic couplings, valves, accessories and pipe which feature ends formed with the Victaulic OGS groove profile

Pipe Materials

- Carbon steel or stainless steel

NOTE

- These fittings are not intended for use with Victaulic plain end couplings. Intended for use only in grooved piping systems. When connecting wafer or lug type butterfly valves directly to Victaulic fittings using Style 741 or Style 743 flange adapters, be sure to check disc clearance dimensions with I.D. dimension of fitting.

ALWAYS REFER TO ANY NOTIFICATIONS AT THE END OF THIS DOCUMENT REGARDING PRODUCT INSTALLATION, MAINTENANCE OR SUPPORT.

System No.		Location	
Submitted By		Date	

Spec Section		Paragraph	
Approved		Date	

© 2017 Victaulic Company. All rights reserved.

2.0 CERTIFICATION/LISTINGS

NOTES

- When supplied as “hot dip galvanized” the following fittings are UL Classified in accordance with ANSI/NSF 61 and for use on cold +86°F/+30°C potable water service and ANSI/NSF 372: No. 10 90° Elbow, No. 11 45° Elbow, No. 12 22½° Elbow, No. 13 11¼° Elbow, No. 100 90° Long Radius Elbow, No. 110 45° Long Radius Elbow, No. 20 Tee, No. 25 Tee with Grooved Branch, No. 30 45° Lateral, No. 60 Cap, No. 50 Concentric Reducers, No. 51 Eccentric Reducers.
- The following Victaulic fittings are VdS approved: No.10 90° Elbow, No.11 45° Elbow, No.20 Tee and No.60 Cap.
- The following Victaulic fittings are LPCB approved: No.10 90° Elbow, No.11 45° Elbow, No.12 22 ½ Elbow, No.13 11 ¼° Elbow, No.30 45° Lateral, No.30-R Reducing Lateral, No.100 Long Radius Elbow, No.110 Long Radius Elbow, No.20 Tee, No.35 Cross, No.60 Cap, No.25 Reducing Tee, No.33 True Wye, No.50 Concentric Reducer, No.51 Eccentric Reducer and No.29M Tee with Threaded Branch.
- The following Victaulic fittings are FM approved: No.10 90° Elbow, No.11 45° Elbow, No.12 22½ Elbow, No.13 11¼° Elbow, No.30 45° Lateral, No.100 Long Radius Elbow, No.20 Tee, No.35 Cross, No.60 Cap, No.25 Reducing Tee and No.50 Concentric Reducer.

3.0 SPECIFICATIONS - MATERIAL

Fitting: (specify choice)

- ☐ Standard: Ductile iron conforming to ASTM A536, Grade 65-45-12.
- ☐ Optional: Segmentally welded steel as shown under nipples

Nipples: (specify choice)

- ☐ ¾ – 4"/DN20 – DN100: Carbon steel, Schedule 40, conforming to ASTM A53, Type F
- ☐ 5 – 6"/DN125 – DN150: Carbon steel, Schedule 40, conforming to ASTM A53, Type E or S, Gr. B
- ☐ 8 – 12"/DN200 – DN300: Carbon steel, Schedule 30 or 40, conforming to ASTM A53, Type E or S, Gr. B

Flanged Adapter Nipples: (specify choice)

- ☐ Class 125 Flange: Cast iron conforming to ANSI B16.1
- ☐ Class 150 Flange: Carbon steel conforming to ANSI B16.5, raised or flat face
- ☐ Class 300 Flange: Carbon steel conforming to ANSI B16.5, raised or flat face

Fitting Coating: (specify choice)

- ☐ Standard: Orange enamel
- ☐ Optional: Hot dip galvanized and others. Some fittings supplied electroplated as standard – see product specifications

Flanged Adapter Nipple Coating: (specify choice)

- ☐ Standard: None (Unfinished)
- ☐ Optional: Orange enamel, hot dip galvanized and others

 © 2017 Victaulic Company. All rights reserved.

4.0 DIMENSIONS

Elbows

No. 10 90° Elbow
No. 11 45° Elbow
No. 12 22½° Elbow
No. 13 11¼° Elbow
No. 100 90° Long Radius Elbow
No. 110 45° Long Radius Elbow

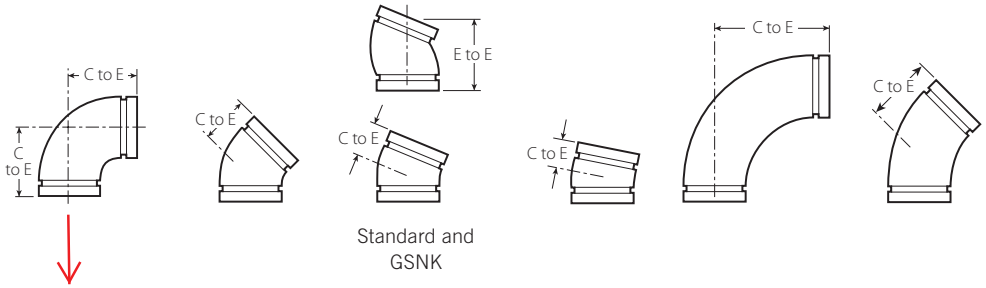

Standard and GSNK

Size		No. 10 90° Elbow		No. 11 45° Elbow		No. 12 22½° Elbow		No. 13 11¼° Elbow		No. 100 90° Long Radius Elbow		No. 110 45° Long Radius Elbow	
Nominal inches DN	Actual Outside Diameter inches mm	C to E inches mm	Approx. Wgt. (Each) lb kg	C to E inches mm	Approx. Wgt. (Each) lb kg	C to E inches mm	Approx. Wgt. (Each) lb kg	C to E inches mm	Approx. Wgt. (Each) lb kg	C to E inches mm	Approx. Wgt. (Each) lb kg	C to E inches mm	Approx. Wgt. (Each) lb kg
¾ DN20	1.050 26.9	2.25 57	0.5 0.2	1.50 38	0.5 0.2	1.63 (sw) 41	—	1.38 (sw) 35	—	2.50 (sw) 64	0.4 0.2	1.88 (sw) 48	0.3 0.1
1 DN25	1.315 33.7	2.25 57	0.6 0.3	1.75 44	0.6 0.3	3.25[1] 83	0.6 0.3	1.38 (sw) 35	0.3 0.1	2.88 (sw) 73	0.6 0.3	2.25 (sw) 57	0.5 0.2
1 ¼ DN32	1.660 42.4	2.75 70	1.0 0.5	1.75 44	0.9 0.4	1.75 44	0.8 0.4	1.38 (sw) 35	0.5 0.2	3.25 (sw) 83	1.1 0.5	2.38 (sw) 60	0.7 0.3
1 ½ DN40	1.900 48.3	2.75 70	1.2 0.5	1.75 44	0.9 0.4	1.75 44	0.8 0.4	1.38 (sw) 35	0.5 0.2	3.63 (sw) 92	2.2 1.0	2.50 (sw) 64	1.3 0.6
2 DN50	2.375 60.3	3.25 83	1.8 0.8	2.00 51	1.3 0.6	1.88 48	1.2 0.5	1.38 35	1.0 0.5	4.38 111	2.5 1.1	2.75 70	1.8 0.8
2 ½	2.875 73.0	3.75 95	3.2 1.5	2.25 57	2.2 1.0	4.00[1] 102	2.3 1.0	1.50 38	1.1 0.5	5.13 130	3.4 1.5	3.00 76	2.8 1.3
DN65	3.000 76.1	3.75 95	3.7 1.7	2.25 57	3.4 1.5	2.25 57	—	1.50 38	—	—	—	—	—
3 DN80	3.500 88.9	4.25 108	4.5 2.0	2.50 64	3.1 1.4	4.50[1] 114	3.1 1.4	1.50 38	2.1 1.0	5.88 149	6.0 2.7	3.38 86	4.9 2.2
3 ½ DN90	4.000 101.6	4.50 114	5.6 2.5	2.75 70	4.3 2.0	2.50 (sw) 64	4.0 1.8	1.75 (sw) 44	2.7 1.2	—	—	—	—
4 DN100	4.500 114.3	5.00 127	7.1 3.2	3.00 76	5.6 2.5	2.88 73	5.6 2.5	1.75 44	3.6 1.6	7.50 191	12.3 5.6	4.00 102	7.3 3.3
	4.250 108.0	5.00 127	11.0 5.0	3.00 76	5.6 2.5	—	—	—	—	—	—	—	—
	5.000 127.0	5.25 (sw) 133	10.0 4.5	3.13 (sw) 79	6.0 2.7	3.50 (sw) 89	6.6 3.0	1.88 (sw) 48	4.2 1.9	—	—	—	—
5	5.563 141.3	5.50 140	11.7 5.3	3.25 83	8.3 3.8	2.88 (sw) 73	7.8 3.5	2.00 (sw) 51	5.0 2.2	9.25 (sw) 235	18.0 8.2	4.88 (sw) 124	14.8 6.7
	5.250 133.0	5.50 140	11.7 5.3	3.25 83	8.3 3.8	—	—	—	—	—	—	—	—
DN125	5.500 139.7	5.50 140	11.7 5.3	3.25 83	8.3 3.8	2.88 73	—	2.00 51	—	—	—	—	—
6 DN150	6.625 168.3	6.50 165	17.2 7.8	3.50 89	10.8 4.9	6.25[1] 159	12.2 5.5	2.00 51	7.0 3.2	10.75 273	30.4 13.8	5.50 140	17.4 7.9
	6.250 159.0	6.50 165	18.6 8.4	3.50 89	10.8 4.9	—	—	—	—	—	—	—	—
	6.500 165.1	6.50 165	15.5 7.0	3.50 89	9.8 4.4	3.13 79	11.4 5.2	2.00 51	7.4 3.4	10.75 (sw) 273	29.0 13.2	5.50 (sw) 140	19.0 8.6

[1] Gooseneck design, end-to-end dimension fittings in this size, contact your nearest Victaulic sales representative.

(s) = Carbon Steel Direct Roll Groove (OGS)

(sw) = Carbon Steel Segmentally Welded

NOTE

- All fittings are ductile iron unless otherwise noted with an (sw) or (s).

 © 2017 Victaulic Company. All rights reserved.

4.0 DIMENSIONS (Continued)

Elbows

No. 10 90° Elbow
No. 11 45° Elbow
No. 12 22½° Elbow
No. 13 11¼° Elbow
No. 100 90° Long Radius Elbow
No. 110 45° Long Radius Elbow

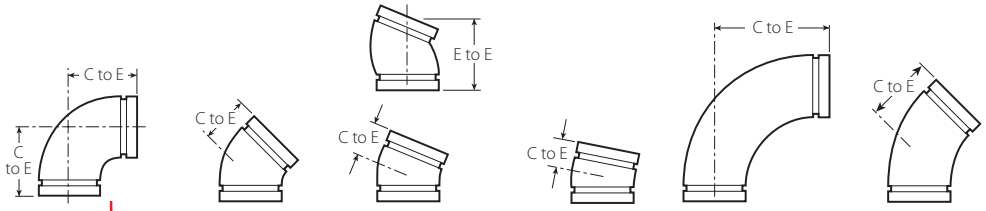

Standard and GSNK

Size		No. 10 90° Elbow		No. 11 45° Elbow		No. 12 22½° Elbow		No. 13 11¼° Elbow		No. 100 90° Long Radius Elbow		No. 110 45° Long Radius Elbow	
Nominal inches DN	Actual Outside Diameter inches mm	C to E inches mm	Approx. Wgt. (Each) lb kg	C to E inches mm	Approx. Wgt. (Each) lb kg	C to E inches mm	Approx. Wgt. Each lb kg	C to E inches mm	Approx. Wgt. (Each) lb kg	C to E inches mm	Approx. Wgt. (Each) lb kg	C to E inches mm	Approx. Wgt. (Each) lb kg
8 DN200	8.625 219.1	7.75 197	29.9 13.6	4.25 108	20.4 9.3	7.75[1] 197	20.0 9.1	2.00 51	10.1 4.6	14.25 362	66.0 30.0	7.25 184	36.0 16.3
10 DN250	10.750 273.0	9.00 229	63.3 28.7	4.75 121	37.5 17.0	4.38 (sw) 111	30.0 13.6	2.13 54	11.8 5.3	15.00 381	107.0 48.5	6.25 159	57.0 25.9
12 DN300	12.750 323.9	10.00 254	74.0 33.6	5.25 133	66.7 30.3	4.88 (sw) 124	40.0 18.1	2.25 57	29.3 13.3	18.00 457	156.0 70.8	7.50 191	90.0 40.8
14[2] DN350	14.000 355.6	14.00 356	136.0 61.7	5.75 146	65.0 29.5	5.00 (sw) 127	46.0 20.9	3.50 (sw) 89	32.0 14.5	21.00 (s) 533	164.0 74.4	8.75 222	82.0 37.2
	14.843 377.0	14.84 377	149.3 67.7	6.13 156	82.0 37.2	—	—	—	—	—	—	—	—
16[2] DN400	16.000 406.5	16.00 406	171.0 77.6	6.63 168	88.0 39.3	5.00 (sw) 127	58.0 26.3	4.00 (sw) 102	42.0 19.1	24.00 (s) 610	210.0 95.3	10.00 (s) 254	100.0 45.4
	16.773 426.0	16.75 425	198.6 90.1	7.00 178	101.3 45.9	—	—	—	—	—	—	—	—
18[2] DN450	18.000 457.2	18.00 457	228.0 103.4	7.50 190	108.0 50.0	5.50 (sw) 140	65.0 29.5	4.50 (sw) 144	53.2 24.1	27.00 (s) 686	273.0 123.8	11.25 (s) 286	135.0 61.2
	18.898 480.0	18.88 480	291.0 132.0	7.83 200	141.7 64.3	—	—	—	—	—	—	—	—
20[2] DN500	20.000 508.0	20.00 508	298.0 135.2	8.25 210	138.0 62.6	6.00 (sw) 152	78.6 36.0	5.00 (sw) 127	65.0 29.5	30.00 (s) 762	343.0 155.6	12.50 (s) 318	174.0 78.9
	20.866 530.0	20.88 530	355.0 161.0	8.63 219	179.0 81.2	—	—	—	—	—	—	—	—
24[2] DN600	24.000 609.6	24.00 610	438.0 198.7	10.00 254	221.0 100.2	7.00 (sw) 178	140.0 63.5	6.00 (sw) 152	60.0 27.2	36.00 (s) 914	516.0 234.1	15.00 (s) 381	251.0 113.9
	24.803 630.0	24.80 630	545.0 247.2	10.25 261	255.2 115.7	—	—	—	—	—	—	—	—
14 – 60 DN350 – DN1500	For AGS fitting information, see publication 20.05 AGS™												

[1] Gooseneck design, end-to-end dimension fittings in this size, contact your nearest Victaulic sales representative.

[2] For 14"/DN350 and larger roll grooved systems, Victaulic offers the Advanced Groove System (AGS). For pricing and availability of cut groove fittings in this size, contact your nearest Victaulic sales representative.

(s) = Carbon Steel Direct Roll Groove (OGS)

(sw) = Carbon Steel Segmentally Welded

NOTE

- All fittings are ductile iron unless otherwise noted with an (sw) or (s).

 © 2017 Victaulic Company. All rights reserved.

5.0 PERFORMANCE

Flow Data

(Frictional Resistance)

The chart expresses the frictional resistance of various Victaulic fittings as equivalent feet of straight pipe. Fittings not listed can be estimated from the data given, for example, a 22½° elbow is approximately one-half the resistance of a 45° elbow. Values of mid-sizes can be interpolated.

Size		Dimensions					
		90° Elbows		45° Elbows		Tees	
Nominal	Actual Outside Diameter	No. 10 Std. Radius	No. 100 1 ½ D Long Radius	No. 11 Std. Radius	No. 110 1 ½ D Long Radius	Branch	Run
inches DN	inches mm	feet meters	feet meters	feet meters	feet meters	feet meters	feet meters
1 DN25	1.315 33.7	1.7 0.5	—	0.8 0.2	—	4.2 1.3	1.7 0.5
2 DN50	2.375 60.3	3.5 1.1	2.5 0.8	1.8 0.5	1.1 0.3	8.5 2.6	3.5 1.1
DN65	3.000 76.1	4.3 1.3	—	2.1 0.7	—	10.8 3.3	4.3 1.3
3 DN80	3.500 88.9	5.0 1.5	3.8 1.2	2.6 0.8	1.6 0.5	13.0 4.0	5.0 1.5
	4.250 108.0	6.4 2.0	—	3.2 0.9	—	15.3 4.7	6.4 2.0
4 DN100	4.500 114.3	6.8 2.1	5.0 1.5	3.4 1.0	2.1 0.6	16.0 4.9	6.8 2.1
	5.250 133.0	8.1 2.5	—	4.1 1.2	—	20.0 6.2	8.1 2.5
DN125	5.500 139.7	8.5 2.6	—	4.2 1.3	—	21.0 6.4	8.5 2.6
5	5.563 141.3	8.5 2.6	—	4.2 1.3	—	21.0 6.4	8.5 2.6
	6.250 159.0	9.4 2.9	—	4.9 1.5	—	25.0 7.6	9.6 2.9
	6.500 165.1	9.6 2.9	—	5.0 1.5	—	25.0 7.6	10.0 3.0
6 DN150	6.625 168.3	10.0 3.0	7.5 2.3	5.0 1.5	3.0 0.9	25.0 7.6	10.0 3.0
8 DN200	8.625 219.1	13.0 4.0	9.8 3.0	6.5 2.0	4.0 1.2	33.0 10.1	13.0 4.0
10 DN250	10.750 273.0	17.0 5.2	12.0 3.7	8.3 2.5	5.0 1.5	41.0 12.5	17.0 5.2
12 DN300	12.750 323.9	20.0 6.1	14.5 4.4	10.0 3.0	6.0 1.8	50.0 15.2	20.0 6.1
14 DN350	14.000 355.6	24.5[4] 7.5	15.8 4.8	18.5[4] 5.6	11.0 3.4	70.0 21.3	23.0 7.0
16 DN400	16.000 406.4	28.0[4] 8.5	18.0 5.5	21.0[4] 6.4	13.0 4.0	80.0 24.4	27.0 8.2
18 DN450	18.000 457.0	31.0[4] 9.5	20.0 6.1	23.5[4] 7.2	14.0 4.3	90.0 27.4	30.0 9.1
20 DN800	20.000 508.0	34.0[4] 10.4	22.5 6.9	25.5[4] 7.8	16.0 4.9	100.0 30.5	33.0 10.1
24 DN600	24.000 610.0	42.0[4] 12.8	27.0 8.2	29.5[4] 9.0	19.0 5.8	120.0 36.6	40.0 12.2
AGS fittings available up to 60"/DN1500. Contact Victaulic for details.							

[4] Fitting flow data for 14-24"/DN350-DN600 size No. 10 and No. 11 Elbows is based on fittings for Style 07 and 77 couplings. For flow data on AGS fittings (No. W10 and No. W11 Elbows), refer to publication 20.05.

 © 2017 Victaulic Company. All rights reserved.

User Responsibility for Product Selection and Suitability

Each user bears final responsibility for making a determination as to the suitability of Victaulic products for a particular end-use application, in accordance with industry standards and project specifications, and the applicable building codes and related regulations as well as Victaulic performance, maintenance, safety, and warning instructions. Nothing in this or any other document, nor any verbal recommendation, advice, or opinion from any Victaulic employee, shall be deemed to alter, vary, supersede, or waive any provision of Victaulic Company's standard conditions of sale, installation guide, or this disclaimer.

Intellectual Property Rights

No statement contained herein concerning a possible or suggested use of any material, product, service, or design is intended, or should be constructed, to grant any license under any patent or other intellectual property right of Victaulic or any of its subsidiaries or affiliates covering such use or design, or as a recommendation for the use of such material, product, service, or design in the infringement of any patent or other intellectual property right. The terms "Patented" or "Patent Pending" refer to design or utility patents or patent applications for articles and/or methods of use in the United States and/or other countries.

Note

This product shall be manufactured by Victaulic or to Victaulic specifications. All products to be installed in accordance with current Victaulic installation/assembly instructions. Victaulic reserves the right to change product specifications, designs and standard equipment without notice and without incurring obligations.

Installation

Reference should always be made to the Victaulic installation handbook or installation instructions of the product you are installing. Handbooks are included with each shipment of Victaulic products, providing complete installation and assembly data, and are available in PDF format on our website at www.victaulic.com.

Warranty

Refer to the Warranty section of the current Price List or contact Victaulic for details.

Trademarks

Victaulic and all other Victaulic marks are the trademarks or registered trademarks of Victaulic Company, and/or its affiliated entities, in the U.S. and/or other countries.

07.01 1449 Rev AF Updated 08/2017 © 2017 Victaulic Company. All rights reserved.

Class 125 (Standard)

FIGURE 811
Flanged Tee



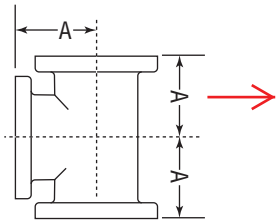

Size		A		AA		Flange Diameter		Thickness				Unit Weight			
								Flange		Wall		Black		Galv.	
NPS	*DN*	in	*mm*	in	*mm*	in	*mm*	in	*mm*	in	*mm*	lbs	*kg*	lbs	*kg*
1 1/2	*40*	4	*102*	8	*203*	5	*127*	9/16	*14*	5/16	*8*	15.00	*6.80*	–	–
2	*50*	4 1/2	*114*	9	*229*	6	*152*	5/8	*16*	5/16	*8*	21.00	*9.52*	–	–
2 1/2	*65*	5	*127*	10	*254*	7	*178*	11/16	*17*	5/16	*8*	30.00	*13.61*	–	–
3	*80*	5 1/2	*140*	11	*279*	7 1/2	*191*	3/4	*19*	3/8	*10*	37.00	*16.78*	37.00	*16.78*
4	*100*	6 1/2	*165*	13	*330*	9	*229*	15/16	*24*	1/2	*13*	64.00	*29.02*	64.00	*29.02*
5	*125*	7 1/2	*191*	15	*381*	10	*254*	15/16	*24*	1/2	*13*	81.00	*36.73*	–	–
6	*150*	8	*203*	16	*406*	11	*279*	1	*25*	9/16	*14*	105.00	*47.62*	105.00	*47.62*
8	*200*	9	*229*	18	*457*	13 1/2	*343*	1 1/8	*29*	5/8	*16*	165.00	*74.83*	165.00	*74.83*
10	*250*	11	*279*	22	*559*	16	*406*	1 3/16	*30*	3/4	*19*	270.00	*122.45*	–	–
12	*300*	12	*305*	24	*610*	19	*483*	1 1/4	*32*	13/16	*22*	380.00	*172.34*	–	–

Note: See following page for pressure-temperature ratings.

PROJECT INFORMATION	APPROVAL STAMP
Project:	☐ **Approved**
Address:	☐ **Approved as noted**
Contractor:	☐ **Not approved**
Engineer:	**Remarks:**
Submittal Date:	
Notes 1:	
Notes 2:	

CAST IRON FLANGED FITTINGS AND FLANGES

Class 125 (Standard) and Class 250 (Extra Heavy)

c UL us FM APPROVED

For Listings/Approval Details and Limitations, visit our website at www.anvilintl.com or contact an Anvil Sales Representative.



Specifications

All Cast Iron Flanged Fittings and Flanges in sizes listed are made to ASME and are marked 125 or 250 for pipe sizes 12 NPS *(300 DN)* and smaller. Unless otherwise specified, cast iron flanges and fittings are drilled and faced in accordance with ASME B 16.1.

Coatings

Flanged fittings and flanges are available in both black painted and galvanized. Consult an Anvil Representative for available sizes.

Sizes

Size of all flanged fittings and flanges scheduled indicates nominal pipe diameter of ports. Standard reducing elbows carry the same dimensions center-to-face as regular elbows of largest straight size.

Ordering

To order reducing companion flanges, specify threaded or reduced size first, then the outside diameter of flange wanted. For instance, if a reducing flange is required to connect a 5-inch pipe to an 8-inch flanged valve or fitting having a 13 1/2 inch O.D. flange, order: 5 x 13 1/2 inch standard reducing flange.

Dimensions

Bolt holes for bolts smaller than 1 3/4 inches *(44mm)* in diameter are drilled 1/8 inch larger than the bolt diameter; 1 3/4 inch *(44mm)* and larger bolts have holes drilled 1/4 inch *(6mm)* larger than bolt diameter. Bolt holes straddle the center line. Bolt holes are spot faced on order only.

Tolerances

An inspection limit of plus or minus 1/32 inch *(1mm)* shall be allowed on all center to contact surface dimensions for sizes up to and including 10 NPS *(250 DN)*; plus or minus 1/16 inch *(1.5mm)* on sizes larger than 10 NPS *(250 DN)*. Inspection limit of plus or minus 1/16 inch *(1.5mm)* shall be allowed on all contact surface to contact surface dimensions for sizes up to and including 10 NPS *(250 DN)*; plus or minus 1/8 inch *(3mm)* on sizes larger than 10 NPS *(250 DN)*. The largest opening in the fitting governs the tolerance to be applied to all openings.

Cast Iron Flanged Fittings and Cast Iron Flanges

Temperature		Pressure* Class 125 1"–12"		Pressure* Class 250 1"–12"	
(°F)	*(°C)*	psi	*bar*	psi	*bar*
-20° to 150°	*-28.9° to 65.6°*	200	*13.8*	500	*34.5*
200°	*93.3°*	190	*13.1*	460	*31.7*
225°	*107.2°*	180	*12.4*	440	*30.3*
250°	*121.1°*	175	*12.1*	415	*28.6*
275°	*135.0°*	170	*11.7*	395	*27.2*
300°	*148.9°*	165	*11.4*	375	*25.9*
325°	*162.8°*	155	*10.7*	355	*24.5*
350°	*178.3°*	150	*10.3*	335	*23.1*
375°	*190.6°*	145	*10.0*	315	*21.7*
400°	*207.8°*	140	*9.7*	290	*20.0*
425°	*218.3°*	130	*9.0*	270	*18.6*
450°	*232.2°*	125	*8.6*	250	*17.2*

* Applies to fittings and flanges manufactured with ASTM A-126 Class B material only.

Standards and Specifications

	Dimensions	Material	Galvanizing**	Thread	Pressure Rating
CAST IRON FLANGES AND FLANGED FITTINGS					
Class 125 (1"-12")	ASME B16.1	ASTM A- 126 (A) or (B)	ASTM A-153	ASME B1.20.1	ASME B16.1
Class 250 (1"-12")	ASME B16.1	ASTM A- 126 (A) or (B)	ASTM A-153	ASME B1.20.1	ASME B16.1

** ASTM B 633. Type I, SC 4, may be supplied as alternate zinc coating per applicable ASME B16 product standard.

CAST IRON FLANGED FITTINGS

Class 125 (Standard)

FIGURE 821
Flanged Cross



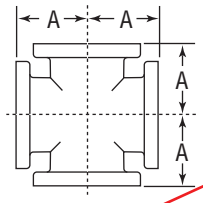

Size		A		AA		Flange Diameter		Thickness				Unit Weight	
								Min. Flange		Wall		Black	
NPS	DN	in	mm	in	mm	in	mm	in	mm	in	mm	lbs	kg
2	50	4 1/2	114	9	225	6	152	5/8	16	5/16	8	28.00	12.70
3	80	5 1/2	140	11	275	7 1/2	191	3/4	19	3/8	10	48.00	21.77
4	100	6 1/2	165	13	325	9	229	15/16	24	1/2	13	82.00	37.19
6	150	8	203	16	400	11	279	1	25	9/16	14	135.00	61.22
8	200	9	229	18	450	13 1/2	343	1 1/8	29	5/8	16	210.00	95.24

FIGURE 823
Flanged Lateral



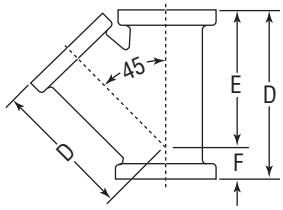

Size		Face to Face D		Center to Face E		Center to Face F		Flange Diameter		Thickness				Unit Weight	
										Min. Flange		Wall		Black	
NPS	DN	in	mm	in	mm	in	mm	in	mm	in	mm	in	mm	lbs	kg
3	80	13	330	10	254	3	76	7 1/2	191	3/4	19	3/8	10	44.00	19.95
4	100	15	381	12	305	3	76	9	229	15/16	24	1/2	13	75.00	34.01
6	150	18	457	14 1/2	368	3 1/2	89	11	279	1	25	9/16	14	125.00	56.69
8	200	22	559	17 1/2	445	4 1/2	114	13 1/2	343	1 1/8	29	5/8	16	210.00	95.24

Note: See following page for pressure-temperature ratings.

PROJECT INFORMATION	APPROVAL STAMP
Project:	☐ Approved
Address:	☐ Approved as noted
Contractor:	☐ Not approved
Engineer:	**Remarks:**
Submittal Date:	
Notes 1:	
Notes 2:	

CAST IRON FLANGED FITTINGS AND FLANGES

Class 125 (Standard) and Class 250 (Extra Heavy)

c UL us FM APPROVED

For Listings/Approval Details and Limitations, visit our website at www.anvilintl.com or contact an Anvil Sales Representative.



Specifications

All Cast Iron Flanged Fittings and Flanges in sizes listed are made to ASME and are marked 125 or 250 for pipe sizes 12 NPS *(300 DN)* and smaller. Unless otherwise specified, cast iron flanges and fittings are drilled and faced in accordance with ASME B 16.1.

Coatings

Flanged fittings and flanges are available in both black painted and galvanized. Consult an Anvil Representative for available sizes.

Sizes

Size of all flanged fittings and flanges scheduled indicates nominal pipe diameter of ports. Standard reducing elbows carry the same dimensions center-to-face as regular elbows of largest straight size.

Ordering

To order reducing companion flanges, specify threaded or reduced size first, then the outside diameter of flange wanted. For instance, if a reducing flange is required to connect a 5-inch pipe to an 8-inch flanged valve or fitting having a 13 1/2 inch O.D. flange, order: 5 x 13 1/2 inch standard reducing flange.

Dimensions

Bolt holes for bolts smaller than 1 3/4 inches *(44mm)* in diameter are drilled 1/8 inch larger than the bolt diameter; 1 3/4 inch *(44mm)* and larger bolts have holes drilled 1/4 inch *(6mm)* larger than bolt diameter. Bolt holes straddle the center line. Bolt holes are spot faced on order only.

Tolerances

An inspection limit of plus or minus 1/32 inch *(1mm)* shall be allowed on all center to contact surface dimensions for sizes up to and including 10 NPS *(250 DN)*; plus or minus 1/16 inch *(1.5mm)* on sizes larger than 10 NPS *(250 DN)*. Inspection limit of plus or minus 1/16 inch *(1.5mm)* shall be allowed on all contact surface to contact surface dimensions for sizes up to and including 10 NPS *(250 DN)*; plus or minus 1/8 inch *(3mm)* on sizes larger than 10 NPS *(250 DN)*. The largest opening in the fitting governs the tolerance to be applied to all openings.

Cast Iron Flanged Fittings and Cast Iron Flanges

Temperature		Pressure* Class 125 1"–12"		Pressure* Class 250 1"–12"	
(°F)	*(°C)*	psi	*bar*	psi	*bar*
-20° to 150°	*-28.9° to 65.6°*	200	*13.8*	500	*34.5*
200°	*93.3°*	190	*13.1*	460	*31.7*
225°	*107.2°*	180	*12.4*	440	*30.3*
250°	*121.1°*	175	*12.1*	415	*28.6*
275°	*135.0°*	170	*11.7*	395	*27.2*
300°	*148.9°*	165	*11.4*	375	*25.9*
325°	*162.8°*	155	*10.7*	355	*24.5*
350°	*178.3°*	150	*10.3*	335	*23.1*
375°	*190.6°*	145	*10.0*	315	*21.7*
400°	*207.8°*	140	*9.7*	290	*20.0*
425°	*218.3°*	130	*9.0*	270	*18.6*
450°	*232.2°*	125	*8.6*	250	*17.2*

* Applies to fittings and flanges manufactured with ASTM A-126 Class B material only.

Standards and Specifications

	Dimensions	Material	Galvanizing**	Thread	Pressure Rating
CAST IRON FLANGES AND FLANGED FITTINGS					
Class 125 (1"-12")	ASME B16.1	ASTM A- 126 (A) or (B)	ASTM A-153	ASME B1.20.1	ASME B16.1
Class 250 (1"-12")	ASME B16.1	ASTM A- 126 (A) or (B)	ASTM A-153	ASME B1.20.1	ASME B16.1

** ASTM B 633. Type I, SC 4, may be supplied as alternate zinc coating per applicable ASME B16 product standard.

CLOW CANADA - M-67 / M93 BRIGADIER FIRE HYDRANT SPECIFICATION

TESTING AND DESIGN SPECIFICATIONS (PER AWWA C502 / NSF /ULC & FM)

1. Hydrant shall be manufactured in accordance with AWWA C502 latest revision
2. Hydrant Has been certified by **UL** in accordance with the **ANSI/NSF 61 and ANSI/NSF 372** (LEAD CONTENT VERIFICATION OF PRODUCTS INCONTACT WITH POTABLE WATER)
3. Hydrant shall be designed for 250 *PSI* working pressure and tested to 500 *PSI* hydrostatic pressure.
4. Hydrant shall be rated for 250 *PSI*. **FM** working pressure and 200 *PSI*. **ULC** working pressure.
5. Hydrant shall be a compression type, dry barrel design with centre operating stem construction.
6. The O-ring seating surface on the upper stem shall be constructed of stainless steel.
7. Epoxy coating to be applied to interior and exterior of hydrant shoe for corrosion protection.
8. Hydrant shall be manufactured with operating nut and integral thrust collar made of bronze. A Delrin washer bearing shall be located above thrust collar for ease of hydrant operation.
9. Hydrant shall have a lower valve assembly that fully encapsulates the lower operating rod threads. This allows for increased corrosion resistance and ease of disassembly.
10. Intermediate section shall be ductile iron**.** (AWWA C110 – 08)

STANDARD HYDRANT FEATURES

1. Body style: Round
2. Hydrant shall have an internally lubricated bronze operating nut with O-ring seals. Operating nut shall be of the Hydra-lubeTM design to ensure self lubrication during operation.
3. Hydrant hose nozzles shall be mechanically locked into place by an external allen screw, and have O-ring seals.
4. Hydrant Lower rod shall be 1-1/4” in sq.
5. Hydrant shall have a main valve opening of 5-1/4”.
6. Hydrant shall be a traffic model, complete with safety flanges and stem coupling. Upper body can be rotated 360 degrees to adjust pumper direction.
7. Hydrant shall be manufactured with a lower valve plate that bottoms out in the shoe for maximum opening.
8. Hydrant shall be backed by manufacturer’s 12 year limited warranty
9. Hydrant shall be the Clow Canada Brigadier as manufactured by Clow Canada.

OPTIONAL HYDRANT FEATURES

1. 2hose **or** 2hose & one pumper upper body

2. AVAILABLE INLETS:
   150mm (6”) Mechanical Joint (ANSI A-21.11)
   150mm (6”) Online chamber flanged (ANSI B16.1 Class 125) for (AWWA C110 – 08) tee
   200mm (8”) Mechanical Joint (ANSI A-21.11)
   200mm (8”) Online chamber flanged (ANSI B16.1 Class 125) for (AWWA C110 – 08) tee
   150mm (6”) flanged (ANSI B16.1 Class 125)
   150mm (6”) flanged (ANSI B16.1 Class 250)
   150mm (6”) Tyton (AWWA C111/A21.11)

3. All standard inlets available in CAST IRON ASTM A126 Class B
   Or Ductile Iron ASTM A536 (65-45-12)
4. Hydra-lube operating nut – see standard shapes on submittal drawing
5. Two 65mm (2.5”) hose nozzles - threads on nozzle ends to suit national, provincial or municipal standard or STORZ quick connect
6. One 114mm (4.5”) pumper nozzle - threads on nozzle ends to suit national, provincial or municipal standard
7. 100mm (4”) or 125mm (5”) STORZ quick connect pumper nozzle.
8. Nozzle caps to suit – see standard shapes on submittal drawing.
9. Two external .375” NPT plugs in inlet @ 180 degrees / one internal .25” NPT plug
10. Hose & pumper nozzle cap chains
11. Hydrants painted / coated to suit national, provincial or municipal standard per AWWA C502 / AWWA C550

		PATT OR DIE No.	FINISH	UNLESS OTHERWISE SPECIFIED DECIMAL DIM'S IN 2 PLACES + or - .02 DIM'S IN 3 PLACES + or - .01 FRACTION DIM'S UNDER 6" + or - DIM'S OVER 6" + or -
LETTER CHANGE	MATERIAL	WEIGHT		

REF. Nos.

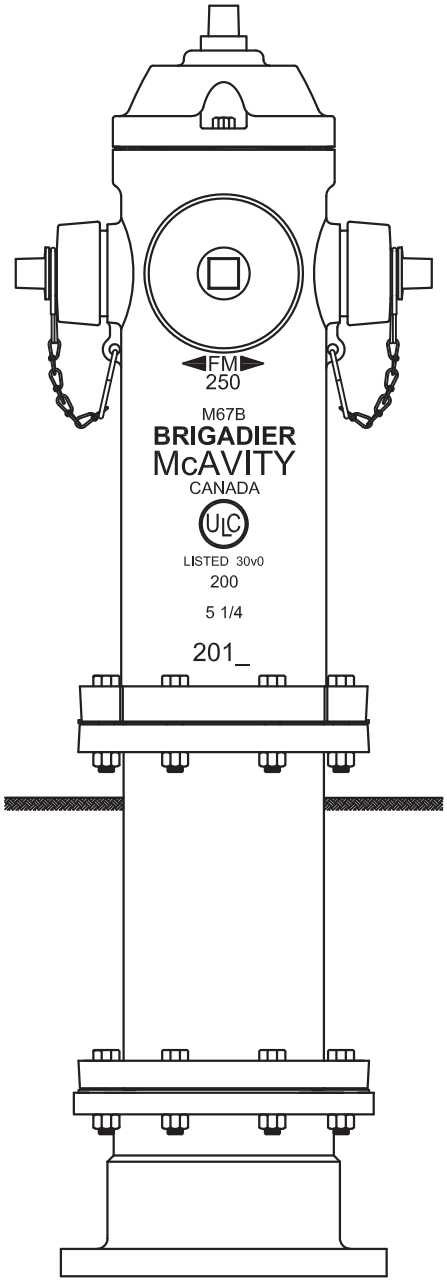

DRAWN	CHECKED	EXAMINED	NOTED	APPROVED
L.G. McKAY				

M67B 2 HOSE 1 PUMPER WITH 8" ON-LINE CHAMBER

SCALE NOT TO SCALE DATE SEPT. / 2010

CLOW CANADA

M67B - 039

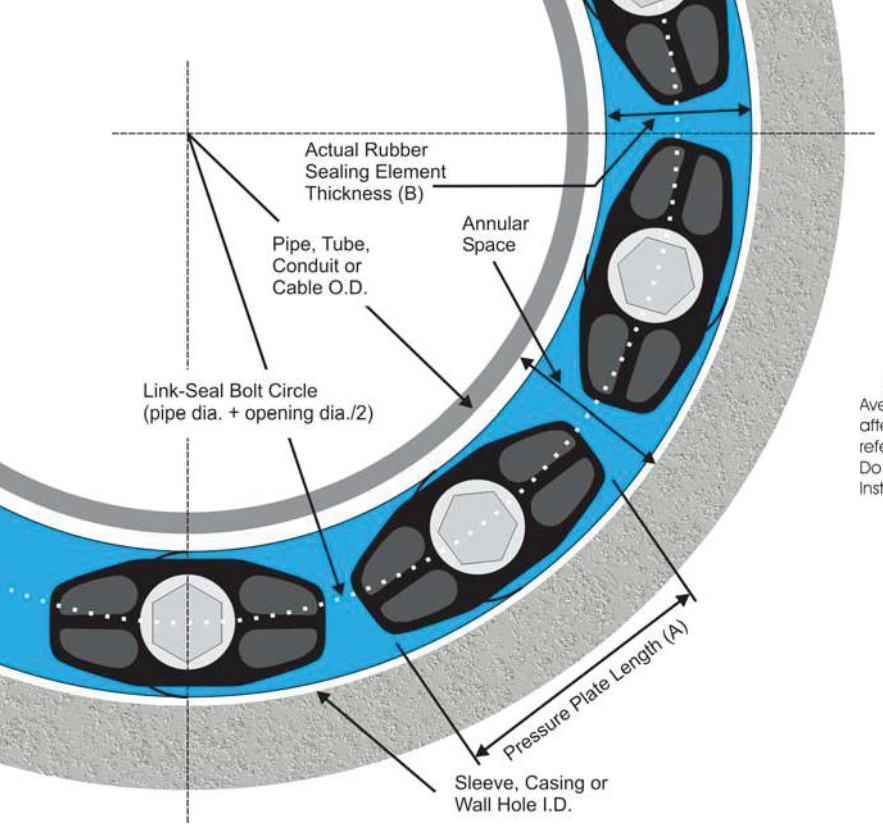

Drawings for Reference Only

For LS-200 through LS-315

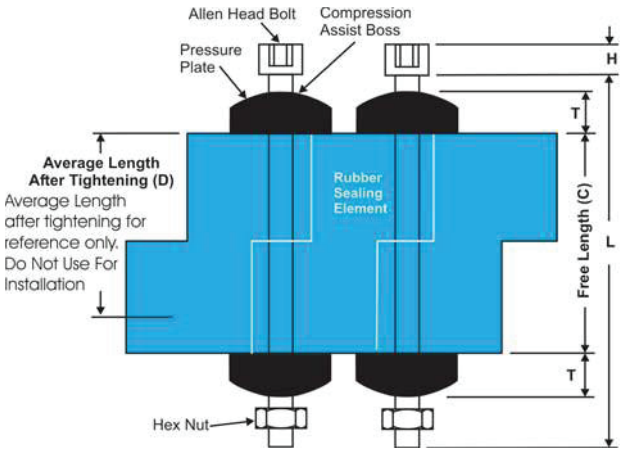

For LS-325 through LS-650

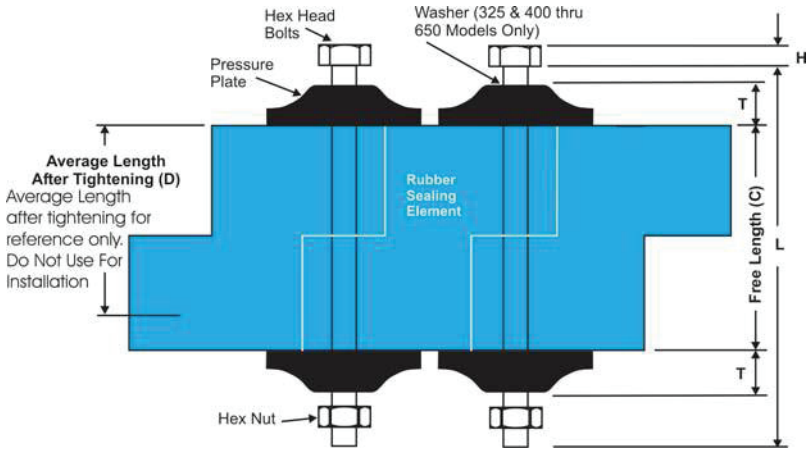

Technical Data Submittal Sheet

Supplement 02/16/16

*Dimensional Data for Models C, L, O, S-316. LS-316 and OS-316

	RUBBER SEALING ELEMENT			PRESSURE PLATE		BOLT				WEIGHT FOR 10 LINK SECTION (LBS)	MIN. REQUIRED SEATING WIDTH
LINK-SEAL MODEL NO.	ACTUAL THICKNESS (B)	FREE LENGTH (C)	AVG. LENGTH AFTER TIGHTENING (D)	(A)	(T)	ALLEN HEAD HEX ACROSS FLATS	(H)	THREAD SIZE	(L)		
LS-200-*	0.48”	1.75”	1.38”	1.06”	0.31”	4mm Allen (0.157”)	4.95mm (0.195”)	M5-0.8	70mm (2.755”)	0.70	2.25”
LS-275-*	0.61”	1.75”	1.38”	0.97”	0.31”	4mm Allen (0.157”)	4.95mm (0.195”)	M5-0.8	70mm (2.755”)	0.75	2.25”
LS-300-*	0.69”	2.37”	1.87”	1.56”	0.44”	6mm Allen (0.236”)	7.87mm (0.310”)	M8-1.25	90mm (3.543”)	2.15	3.00”
LS-315-*	0.81”	2.37”	1.87”	1.44”	0.44”	6mm Allen (0.236”)	7.87mm (0.310”)	M8-1.25	90mm (3.543”)	2.30	3.00”
LS-325-*	0.88”	2.63”	2.00”	3.13”	1.00”	13mm (0.511”)	5.30mm (0.215”)	M8-1.25	90mm (3.543”)	5.50	4.00”
LS-340-*	1.00”	2.70”	2.25”	1.48”	0.66”	13mm (0.511”)	5.30mm (0.215”)	M8-1.25	120mm (4.720”)	3.30	4.00”
LS-360-*	1.24”	2.70”	2.25”	2.05”	0.77”	13mm (0.511”)	5.30mm (0.215”)	M8-1.25	120mm (4.720”)	5.10	4.00”
LS-400-*	1.38”	3.50”	2.75”	3.50”	1.06”	17mm (0.669”)	6.40mm (0.250”)	M10-1.5	130mm (5.118”)	12.00	5.00”
LS-410-*	1.43”	3.37”	2.87”	2.52”	0.88”	17mm (0.669”)	6.40mm (0.250”)	M10-1.5	130mm (5.118”)	8.20	5.00”
LS-425-*	1.06”	3.00”	2.25”	3.50”	1.19”	17mm (0.669”)	6.40mm (0.250”)	M10-1.5	130mm (5.118”)	10.00	5.00”
LS-475-*	1.56”	3.38”	2.63”	2.63”	0.88”	17mm (0.669”)	6.40mm (0.250”)	M10-1.5	130mm (5.118”)	10.00	5.00”
LS-500-*	2.25”	3.75”	2.75”	3.63”	1.06”	19mm (0.748”)	7.50mm (0.300”)	M12-1.75	140mm (5.511”)	22.50	5.00”
LS-525-*	2.06”	3.75”	2.87”	3.63”	1.06”	19mm (0.748”)	7.50mm (0.300”)	M12-1.75	140mm (5.511”)	21.00	5.00”
LS-575-*	1.81”	3.75”	3.00”	3.00”	1.00”	19mm (0.748”)	7.50mm (0.300”)	M12-1.75	140mm (5.511”)	15.50	5.00”
LS-615-*	3.09”	4.00”	3.00”	6.00”	1.90”	24mm (0.944”)	12. 50mm (.490”)	M12-2	180mm (7.086”)	60.60	6.00”
LS-650-*	2.71”	3.98”	3.00”	3.96”	1.19”	19mm (0.748”)	7.50mm (0.300”)	M12-1.75	140mm (5.511”)	26.10	6.00”

GPT
an EnPro Industries company

VISIT WWW.GPTINDUSTRIES.COM FOR LITERATURE AND INSTALLATION INSTRUCTIONS

Link-Seal® Modular Seal Model Properties

with EPDM Seal Elements



EPDM (Black)
EPDM (Blue) Low Durometer

Model "C" or "L" Link-Seal Modular Seal
Suitable for use in water, direct ground burial and atmospheric conditions. Provides electrical isolation where cathodic protection is required.
Type: Standard
Seal Element: EPDM (Black) or EPDM (Blue)
Pressure Plates: Reinforced Nylon Polymer
Bolts & Nuts: Steel with 2-part Zinc Dichromate & proprietary corrosion inhibiting coating.
Temp. Range: -40 to +250ºF (-40 to +121ºC)*

Model "S-316" or "LS-316" Link-Seal Modular Seal
For chemical processing & waste water treatment. EPDM rubber is resistant to most inorganic acids and alkalis, some organic chemicals (acetone, alcohol, ketones).
Type: Stainless
Seal Element: EPDM (Black) or EPDM (Blue)
Pressure Plates: Reinforced Nylon Polymer
Bolts & Nuts: 316 Stainless Steel
Temp. Range: -40 to +250ºF (-40 to +121ºC)*

* = Sustained operation near temperature limits may affect life expectancy.

with Nitrile Seal Elements



Nitrile (Green)

Model "O" Link-Seal Modular Seal
Nitrile rubber is resistant to oils, fuel and many solvents (gasoline, motor oil, kerosene, methane, jet fuel, hydraulic fluid, water, etc.).
Type: Oil Resistant
Seal Element: Nitrile (Green) Note: Not U.V resistant.
Pressure Plates: Reinforced Nylon Polymer
Bolts & Nuts: Steel with 2-part Zinc Dichromate & proprietary corrosion inhibiting coating.
Temp. Range: -40 to +210ºF (-40 to +99ºC)*

Model "OS-316" Link-Seal Modular Seal
Combination of oil resistant rubber and stainless steel hardware.
Type: Oil Resistant
Seal Element: Nitrile (Green) Note: Not U.V resistant.
Pressure Plates: Reinforced Nylon Polymer
Bolts & Nuts: 316 Stainless Steel
Temp. Range: -40 to +210 ºF (-40 to +99ºC)*

* = Sustained operation near temperature limits may affect life expectancy.

with Silicone Seal Elements



Silicone (Grey)

Model "T" Link-Seal Modular Seal
Silicone rubber is ideal for temperature extremes. The "T" model is one-hour Factory Mutual approved.
Type: High/Low Temperature
Seal Element: Silicone (Grey)
Pressure Plates: Steel Zinc Dichromate
Bolts: Steel with 2-part Zinc Dichromate & proprietary corrosion inhibiting coating.
Temp. Range: -67 to +400ºF (-55 to +204ºC)*

Model "FD/FS" Link-Seal Modular Seal
Double seal for added protection.
Type: Fire Seals
Seal Element: Silicone (Grey)
Pressure Plates: Steel zinc dichromate
Bolts: Steel with 2-part Zinc Dichromate proprietary corrosion inhibiting coating.
Temp. Range: -67 to +400ºF (-55 to +204ºC)*
NOTE: Sustains a constant temp. of 325ºF. (163º C.)

* = Sustained operation near temperature limits may affect life expectancy.

Material Properties of Link-Seal Modular Seal Elements

PROPERTY	ASTM METHOD	EPDM (EPDM L)	NITRILE	SILICONE
Hardness (shore A)	D-2240	50 ±5 (40 ±5)	50 ±5	50 ±5
Tensile	D-412	1450 psi	1300 psi	860 psi
Elongation	D-412	400%	300%	250%
Compression Set	S-395	15% 22 hrs. @ 158ºF (70ºC)	45% 22 hrs. @ 212ºF (100ºC)	40% 22 hrs. @ 350ºF (177ºC)
Specific Gravity	D-297	1.10	1.15	1.40

Material Properties of Composite Pressure Plates

PROPERTY	ASTM METHOD	VALUE
Izod Impact - Notched	D-256	2.05 ft-lb/in
Tensile Strength @ Yield	D-638	20,000 psi
Tensile Strength - Break	D-638	20,250 psi
Flexural Strength @ Yield	D-790	30,750 psi
Flexural Modulus	D-790	1,124,000 psi
Elongation, Break	D-638	11.07%
Specific Gravity	D-792	1.38
Moisture Content	--	0.18%

Bolt & Nut Specifications

Standard: Carbon Steel
Carbon steel, zinc dichromate per ASTM B633, with an additional corrosion inhibiting proprietary organic coating. (Passes 1470 hour salt spray test)
Tensile Strength = 60,000 psi, minimum.

Option: Stainless Steel
ANSI Type = 316, Per ASTM F593-95
Tensile Strength = 85,000 psi, average.

GPT
an EnPro Industries company
6455 Clara Road, Suite 300 Houston Texas 77041 U.S.A.
Tel: 713-747-6948, Fax: 713-747-6029, Toll Free: 800-423-2410
www.gptindustries.com

LSTECH-02/16/16
©2015, GPT

SUBMITTALS IDENTIFICATION SHEET

PROJECT: Wastewater Treatment Plant Upgrade
Iqaluit, Nunavut

CONTRACTOR: Kudlik Construction Ltd, Project 2018-062

Telephone: 867-979-1166

E-mail: srousseau@kudlik.biz

SUBCONTRACTOR:

Person responsible:

Telephone: () E-mail:

PRODUCT SUBMITTED:

☐ As Specified

☐ Alternate

SUPPLIER or MANUFACTURER: Produits BCM

340 Emile Couture

Chicoutimi

Person responsible: Denis Bernier

Telephone: (418)545-1698 E-mail: denis-bernier@produitsbcm.com

DESCRIPTION OF SUBMITTAL: HDPE

# of pages:

Reference to drawings: 6/A424

Reference to specs:

Division: 33 Section: 33 11 17

REMARKS:

REVIEW AND COMMENTS (for use by Consultants):

STANTEC PROJECT #: 110126045 SUBMITTAL # 002

This review by Stantec is for general conformance with the design concept of Stantec's design of the:

☐ Architectural ☐ Structural ☐ Mechanical ☑ Electrical ☑ Other Civil

component(s) only and does not mean that Stantec has verified or approves the shop drawing(s). The Contractor remains solely responsible for the shop drawing(s) and this review by Stantec does not relieve the Contractor of the Contractor's responsibility for errors or omissions in the shop drawing(s) or for meeting all requirements of the contract documents. This review does not mean that Stantec approves the detailed design inherent in the shop drawing, responsibility for which shall remain with the Contractor submitting same, nor does this review mean that Stantec accepts any deviation of the shop drawing(s) from the contract documents. The Contractor is responsible for confirming all dimensions and correlating them at the job site, for all construction means, methods and techniques, and for coordination of construction work of all trades, including coordination of all shop drawings.

Stantec

☑ REVIEWED

☐ REVIEWED, AS NOTED

☐ REVISE AND RESUBMIT

☐ NOT REVIEWED

DATE 2018-06-07

BY Matt Follett

Review of this submission is for compliance with general intent of the contract. This review does not relieve the Sub-Contractor, Supplier or Manufacturer of responsibility for error or omissions in the submission or the responsibility of meeting all requirements of the contract documents. Any deviation from the contract documents initiated by the Sub-Contractor, Supplier or Manufacturer shall be at their sole risk. QUANTITIES AND DETAIL DIMENSIONS ARE THE SUB-CONTRACTORS OR SUPPLIERS RESPONSIBILITY. VERIFY DATA WITH FIELD DIMENSIONS.

SUBMITTAL TRACKING No.: **CIVIL-002 rev1**

2018-06-07

Stub Ends - Butt Fusion (Molded)

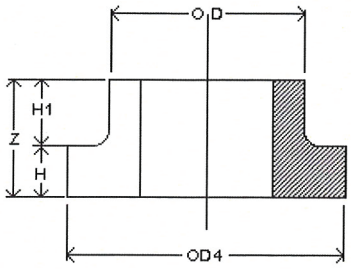

Dimensions

Nominal Pipe Size	OD	OD4	Z	H1	H	Rahn Part #: HDPE3408 Black	DR
1-¼" IPS	1.660	2.750	1.400	1.125	0.250	SE-125	DR9
1-½" IPS	1.900	3.000	1.500	1.250	0.250	SE-150	DR9
2" IPS	2.375	3.894	1.750	1.350	0.400	SE-2	DR7
3" IPS	3.500	4.900	2.250	1.560	0.690	SE-3	DR7
4" IPS	4.500	6.630	1.732	0.748	0.984	SE-4	DR9
5" IPS	5.563	7.543	2.008	1.024	0.984	SE-5	DR9
6" IPS	6.625	8.535	2.008	0.945	1.063	SE-6	DR9
8" IPS	8.625	10.760	2.244	0.984	1.260	SE-8	DR9
10" IPS	10.750	13.133	2.717	1.217	1.500	SE-10	DR7
12" IPS	12.750	15.525	3.150	1.400	1.750	SE-12	DR9
14" IPS	14.000	17.354	3.843	2.093	1.750	SE-14	DR9
16" IPS	16.000	19.317	3.937	1.575	2.362	SE-16	DR9
18" IPS	18.000	21.171	4.528	1.772	2.756	SE-18	DR9
20" IPS	20.000	23.435	4.724	1.968	2.756	SE-20	DR9

- Specify SDR required when ordering.

Flange Adapter - Butt Fusion (Molded)

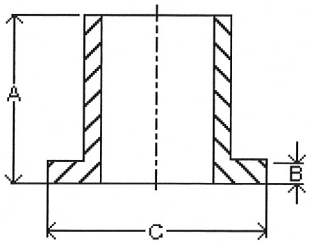

Dimensions

Nominal Pipe Size	A	B	C	Rahn Part #: HDPE3408 Black	DR
1-¼" IPS	6.000	0.250	2.750	3158B-125	DR9
1-½" IPS	6.000	0.275	3.125	3158B-150	DR9
2" IPS	6.000	0.450	3.875	3158B-2	DR7
3" IPS	6.000	0.600	5.000	3158B-3	DR5
4" IPS	6.000	1.000	6.600	3158B-4	DR5
4" DIPS	6.000	1.000	6.600	3158B-4-DIPS	DR9
5" IPS	8.000	1.100	7.515	3158B-5	DR9
6" IPS	8.000	1.100	8.500	3158B-6	DR5
6" DIPS	8.000	1.100	8.500	3158B-6-DIPS	DR9
8" IPS	9.000	1.500	10.600	3158B-8	DR7
10" IPS	12.000	1.500	12.750	3158B-10	DR9
12" IPS	12.000	1.775	15.500	3158B-12	DR9

Backup Flanges – Ductile Iron *

Normal Pipe Size	Flange Order #	Outside Dia. of Flange	Min. Thickness of Flange	Min. Dia. of Bore	Length through Hub	# of Bolts	Min. Dia. of Bolt Holes	Dia. of Bolt Circle	Inside Corner Radius	Weight Lbs.	Non Shock Operating Pressure
1-¼"	BU-125C	4.63	0.63	1.72	0.22	4	0.63	3.50	0.19	1.8	275
1-½"	BU-150C	5.00	0.69	1.97	0.22	4	0.63	3.88	0.25	2.0	275
2"	BU-2A	6.00	0.75	3.00	0.23	4	0.75	4.75	0.13	2.5	275
2"	BU-2B	6.00	0.75	2.63	0.23	4	0.75	4.75	0.13	2.5	275
2"	BU-2C	6.00	0.75	2.46	0.37	4	0.75	4.75	0.31	2.5	275
3"	BU-3A	7.50	0.94	4.00	0.25	4	0.75	6.00	0.13	3.8	275
3"	BU-3B	7.50	0.94	3.75	0.25	4	0.75	6.00	0.13	3.8	275
3"	BU-3C	7.50	0.94	3.60	0.50	4	0.75	6.00	.038	3.8	275
3"	BU-3D	7.50	0.94	Special	0.50	4	0.75	6.00	0.38	3.8	275
4"	BU-4B	9.00	0.94	4.75	0.25	8	0.75	7.50	0.13	5.3	275
4"	BU-4C	9.00	0.94	4.60	0.50	8	0.75	7.50	0.44	5.3	275
4"	BU-4D	9.00	0.94	Special	0.50	8	0.75	7.50	0.44	5.3	275
5"	BU-5B	10.00	0.94	5.81	0.27	8	0.88	8.50	0.13	6.4	275
5"	BU-5C	10.00	0.94	5.69	0.50	8	0.88	8.50	0.44	6.4	275
6"	BU-6B	11.00	1.00	6.88	0.28	8	0.88	9.50	0.13	7.3	275
6"	BU-6C	11.00	1.00	6.75	0.50	8	0.88	9.50	0.50	7.3	275
6"	BU-6D	11.00	1.00	Special	0.50	8	0.88	9.50	0.50	7.3	275
8"	BU-8B	13.50	1.00	8.88	0.32	8	0.88	11.75	0.13	11.1	275
8"	BU-8C	13.50	1.13	8.75	0.50	8	0.88	11.75	0.50	11.1	275
8"	BU-8D	13.50	1.13	Special	0.50	8	0.88	11.75	0.50	11.1	275
10"	BU-10A	16.00	1.19	10.31	0.49	12	1.00	14.25	0.30	18.0	275
10"	BU-10B	16.00	1.19	11.00	0.49	12	1.00	14.25	0.38	16.8	275
10"	BU-10C	16.00	1.19	10.92	0.50	12	1.00	14.25	0.50	16.8	275
11"	BU-11A	16.00	1.19	11.37	0.49	12	1.00	14.25	0.34	16.3	275
12"	BU-12B	19.00	1.25	13.13	0.63	12	1.00	17.00	0.31	24.1	275
12"	BU-12C	19.00	1.25	12.92	0.63	12	1.00	17.00	0.50	24.1	275
14"	BU-14B	21.00	1.38	14.38	0.70	12	1.13	18.75	0.40	29.5	250
14"	BU-14C	21.00	1.38	14.18	0.70	12	1.13	18.75	0.50	29.5	250
16"	BU-16B	23.50	1.44	16.38	0.70	16	1.13	21.25	0.40	36.6	250
16"	BU-16C	23.50	1.44	16.19	0.70	16	1.13	21.25	0.50	36.6	250
18"	BU-18B	25.00	1.56	18.38	0.75	16	1.25	22.75	0.38	46.0	250
18"	BU-18C	25.00	1.56	18.20	0.75	16	1.25	22.75	0.50	46.0	250
20"	BU-20B	27.50	1.69	20.38	0.88	20	1.25	29.50	0.50	58.4	200

* Also Available in other materials and finishes (i.e. HDPE, Stainless Steel, Carbon Steel, Epoxy Coated, Galvanized)

Note: A, B, C refer to different inside diameters

FLYING W PLASTICS, INC.

IPS PipeData (Iron Pipe Size Outside Diameter)

		IPS DR - 7			*IPS DR - 7.3*			*IPS DR - 9*			*IPS DR - 11*			*IPS DR - 13.5*		
Pipe Size	Nominal OD	Min. Wall	Average ID	Weight (lbs/ft.)	Min. Wall	Average ID	Weight (lbs/ft.)	Min. Wall	Average ID	Weight (lbs/ft.)	Min. Wall	Average ID	Weight (lbs/ft.)	Min. Wall	Average ID	Weight (lbs/ft.)
1/2"	0.840	0.120	0.58	0.118	0.115	0.59	0.114	0.093	0.64	0.096	0.076	0.67	0.08	0.062	0.70	0.071
3/4"	1.050	0.150	0.73	0.185	0.144	0.74	0.18	0.117	0.80	0.15	0.095	0.84	0.125	0.078	0.88	0.104
1"	1.315	0.188	0.91	0.29	0.180	0.93	0.28	0.146	1.00	0.235	0.120	1.06	0.197	0.097	1.10	0.163
1-1/4"	1.660	0.237	1.15	0.462	0.227	1.17	0.447	0.184	1.26	0.374	0.151	1.34	0.313	0.123	1.39	0.26
1-1/2"	1.900	0.271	1.32	0.606	0.260	1.34	0.585	0.211	1.45	0.49	0.173	1.53	0.411	0.141	1.60	0.341
2"	2.375	0.339	1.65	0.947	0.325	1.68	0.914	0.264	1.81	0.766	0.216	1.91	0.642	0.176	2.00	0.533
2-1/2"	2.875	0.411	2.00	1.39	0.389	2.05	1.34	0.319	2.19	1.12	0.261	2.32	0.94	0.213	2.42	0.781
3"	3.500	0.500	2.44	2.06	0.479	2.48	1.99	0.389	2.67	1.66	0.318	2.82	1.39	0.259	2.95	1.16
4"	4.500	0.643	3.13	3.40	0.616	3.19	3.28	0.500	3.44	2.75	0.409	3.63	2.30	0.333	3.79	1.91
5"	5.563	0.795	3.87	5.19	0.762	3.94	5.02	0.618	4.25	4.20	0.506	4.49	3.52	0.412	4.68	2.93
6"	6.625	0.946	4.61	7.37	0.908	4.70	7.12	0.736	5.06	5.96	0.602	5.34	4.99	0.491	5.58	4.15
8"	8.625	1.232	6.01	12.49	1.182	6.12	12.06	0.958	6.59	10.10	0.784	6.96	8.46	0.639	7.27	7.03
10"	10.750	1.536	7.49	19.40	1.473	7.62	18.74	1.194	8.21	15.68	0.977	8.67	13.14	0.796	9.06	10.92
12"	12.750	1.821	8.88	27.28	1.747	9.04	26.36	1.417	9.74	22.06	1.159	10.29	18.49	0.944	10.74	15.36
14"	14.000							1.556	10.70	26.60	1.273	11.30	22.29	1.037	11.80	18.52
16"	16.000							1.778	12.23	34.60	1.455	12.91	29.12	1.185	13.48	24.19
18"	18.000							2.000	13.76	43.79	1.636	14.53	36.85	1.333	15.17	30.62

Pipe weights are calculated in accordance with PPI TR-7. Average ID is calculated using nominal OD and minimum wall plus 6% for use in estimating fluid flows. Actual inside diameter will vary. Pipe dimensions are in accordance with applicable ASTM standards.

DESIGN-FLOW®

Convoluted - Epoxy Coated & Galvanized DI

IPS Bolt Rings

Designed Specifically for use with HDPE Flange Adapters*

ASME / ANSI B16.5, B16.47Ser.A CL150
B16.1 CL125 AWWA C207 B,D & E

(Dimensions in Inches)

U.S. Patent # 7,401,821

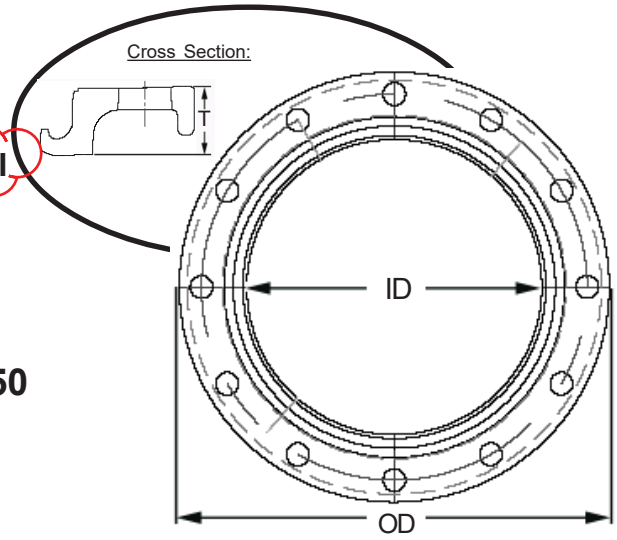

IPS Nominal Size	T (Thickness)	OD	ID	Bolt Hole Circle	Number Of Bolt Holes	Diameter Of Bolt Holes	WPR (psi)	Weight (lbs)
3/4"	.53	3.88	1.11	2.75	4	5/8"	335	1.0
1"	.53	4.25	1.38	3.13	4	5/8"	335	1.2
1-1/4"	.63	4.63	1.72	3.50	4	5/8"	335	1.5
1-1/2"	.69	5.00	1.97	3.88	4	5/8"	335	1.6
2"	.75	6.00	2.50	4.69	4	3/4"	335	2.7
3"	.94	7.50	3.63	6.00	4	3/4"	335	4.5
4"	.94	9.00	4.63	7.50	8	3/4"	335	5.5
5"	.94	10.00	5.69	8.50	8	7/8"	335	5.9
6"	1.00	11.00	6.75	9.50	8	7/8"	335	7.5
8"	1.13	13.50	8.75	11.75	8	7/8"	335	12
10"	1.19	16.00	10.94	14.25	12	1"	335	15
12"	1.25 1.50	19.00	13.00	17.00	12	1"	200 335	24 25
14"	1.38 1.63	21.00	14.38	18.75	12	1-1/8"	200 335	29 35

WPR (working pressure rating) is for free-floating rings on HDPE flange adapters and includes a 2:1 safety factor. These are cast convoluted ductile-iron metal bolt rings with 150# bolt-hole pattern; primed and surfaced with an epoxy based paint; the material is in compliance with ASTM A536 GR 65/45/12. Rings also available with galvanized coating.

GF Piping Systems

+GF+ URECON

GF Urecon Pre-insulated Pipe



URECON

DETAILED SPECIFICATION

Standard U.I.P.® system for below grade piping

1. GENERAL

The pipe shall be insulated using the unique U.I.P.® factory insulation process, as supplied by Urecon Ltd., complete with integral conduit(s) for electric heat trace cable (if required) and 1.27 mm *(50 mils)* to 2.54 mm (*100 mils*) black polyethylene jacket with UV inhibitor. The jacket thickness is dependent on the insulated pipe diameter and its intended function. The insulation of associated joints, fittings and accessories shall be as per Urecon's recommendations. The product shall be manufactured in accordance to ISO 9001 Standards, or approved equal.

2. PIPE PREPARATION

Pipe shall be cleaned of surface dust or dirt to ensure adhesion of the foam to the pipe.

3. HEAT TRACING CONDUIT

Heat tracing conduit(s) shall consist of an extruded molding and shall be applied to the pipe prior to application of the insulation. The conduit(s) will be securely fastened to the pipe to prevent the ingress of foam therein during the insulation process. All conduit(s) shall be checked after insulating to ensure they are not blocked. The ends shall be sealed prior to shipping to prevent any foreign material from entering the conduit while in transit or during installation.

4. INSULATION

a) Material: Rigid polyurethane foam, factory applied.
b) Thickness: 50.8 mm *(2 in)* or as required.
c) Density: (ASTM D1622) 35 to 48 kg/m^3 *(2.2 to 3.0 lbs/ft^3).*
d) Closed cell content: (ASTM D6226) 90%, minimum.
e) Water absorption: (ASTM D2842) maximum 4.0% by volume.
f) Thermal conductivity: (ASTM C518) 0.020 to 0.025 W/m°C *(0.14 to 0.17 Btu • in/ft² • hr • °F).*
g) Temperature range: Cryogenic to 93.3 °C *(200 °F).*

5. SYSTEM PROPERTIES

a) System compressive strength: (modified ASTM D1621 with 1.27 mm *(50 mils)* jacket) approximately 414 to 552 kPa *(60-80 lbs/in²),* varies with pipe diameter.
b) Service temperature range: the overall factory insulated system limitations are dependent on the core pipe type, insulation and application.
c) Temperature limitations: minimum ambient installation temperature -34 °C *(-29 °F).*

6. OUTER JACKET ON PIPE INSULATION (WITH ENHANCED COLD CLIMATE HANDLING PROPERTIES)

The outer protective jacket shall consist of either:

i.) Tape wrap system: (available from both manufacturing facilities)
  a) Jacket material: Scapa #366 polyethylene, UV inhibited, formulated for superior cold environment properties.
  b) Sealant: Butyl rubber and resin, applied hot in 0.63 mm (*25 mils*) multiple layers providing a shrink tightened waterproof bond throughout its entire length.
  c) Minimum elongation: (ASTM D1000) 300%, 6 month test.
  d) Tensile strength: (ASTM D1000) 6.83 kg/cm wide *(38 lbs/in wide).*

ii.) Extruded system*:* (available from Calmar, AB only)
  a) Jacket material: Extruded black high density polyethylene copolymer, UV inhibited and factory applied.
  b) Minimum cell classification 435560A for PE as per ASTM D3350.
  c) Minimum 2% carbon black, well dispersed.
  d) Density 0.953 g/cm^3 *(59.5 lbs/ft^3)* ASTM D4883.
  e) Tensile Strength at yield (50.8 mm *(2 in)* /min) 26 MPa (*3700 psi*), ASTM D638.

URECON PRE-INSULATED PIPE
Coteau-du-Lac, Quebec (450) 455-0961
Calmar, Alberta (780) 985-3636
Florida (321) 638-2364
www.urecon.com

Recommended PE Jacket thicknesses* for below grade applications-

Jacket OD ≤ 406.4 mm (*16 in*)	@ 1.27 mm (*50 mils)*
Jacket OD > 406.4 mm (*16 in*) to 609.6 mm (*24 in*)	@ 1.90 mm (*75 mils*)
Jacket OD ≥ 609.6 mm (*24 in*)	@ 2.54 mm (*100 mils*)

*other jacket thicknesses are available upon request

7. INSULATED PIPE JOINTS

a) Butt-fused and welded joints

Insulated pipe joints shall be completed using pre-fabricated rigid polyisocyanurate or polyurethane foam half shells and sealed with the application of suitable wrap around adhesive lined heat shrink sleeves as supplied by Urecon. The heat shrink sleeves shall overlap the insulation jacket by a minimum of 75.2 mm *(3 in)* on either side of the joint. The insulation shall be pre-grooved on the inside or slightly oversized to accommodate heat trace cable(s) if applicable.

b) Bell x spigot joints

Insulated pipe joints shall be sealed with a 152.4 mm (*6 in*) wide heat shrink sleeve or butyl mastic tape if the system is not electrically heat traced, 304.8 mm (*12 in*) to 609.6 mm (24 in) wide if traced, depending on pipe size.

8. INSULATION KITS FOR FITTINGS

Insulation kits for fittings shall consist of rigid polyisocyanurate or polyurethane foam half shells with a fully bonded polymer protective coating on all exterior and interior surfaces, including ends. All insulation kits shall be supplied complete with silicone caulking for seams, stainless steel bands and gear clamps.

a) Rigid polyisocyanurate or polyurethane foam

1. Density: (ASTM D1622) 32 kg/m³ *(2.0 lbs/ft³)*.
2. Compressive strength: (ASTM D1621) 124 to 186 kPa (18 to 27 lbs/in²).
3. Closed cell content: (ASTM D2856) 90%, minimum.
4. Water absorption: (ASTM C272) 2.0% by volume.
5. K factor: (ASTM C518) 0.027 W/m℃ (0.19 Btu • in/ft² • hr • ℉).
6. Thickness: 50.8 mm (2 in), other thicknesses upon request, shall match pipe insulation thickness.

b) Polymer coating, Urecon BL-70-20EP

1. Two component high density polyurethane coating, black in color.
2. Density: 1170 kg/m³ *(73 lbs/ft³).*
3. Durometer D scale 60.
4. Tensile strength: 11.10 MPa *(1610 lbs/in²).*
5. Tear strength: 26.5 N/mm *(151 lbs/in).*
6. Thickness: 1.78 mm *(70 mils)* outside surfaces, 0.51 mm *(20 mils)* inside surfaces.

9. ELECTRIC TRACING SYSTEM

The electric tracing system and associated controls shall be as per the manufacturer's recommendations with particular attention being paid to the watt densities applied through conduits on plastic pipes. All tracing cables and related accessories to be CSA approved and comply with CSA heat tracing standard C22.2 No. 130-03. Standard of acceptance is Urecon's Thermocable or approved equal. Please contact your Urecon representative for further details and design assistance.

Note: *Physical characteristics are nominal and may vary depending on pipe type and diameter.*

CANADA

75 boulevard Dupont
Coteau-du-lac (Québec) J0P 1B0
Tél: (450) 455-0961 Fax: (450) 455-0350
E-mail: sales.east@urecon.com

5010 – 43rd Avenue
Calmar (Alberta) T0C 0V0
Tel: (780) 985-3636 Fax: (780) 985-2466
E-mail: sales.west@urecon.com

WEB SITE: www.urecon.com

I S O 9 0 0 1 Registered Company

UNITED STATES

Tel: (321) 638-2364 Fax: (321) 638-2371
E-mail: sales.usa@urecon.com

WEB SITE: www.urecon.com

[TECHNICAL DATA SHEET]

VERSAPROFILES
TUBES, PROFILES, COMPLEX SOLUTIONS MADE SIMPLE

VERSAPIPE® HD100 PW

High Density Polyethylene IPS and SIDR Pipe for Potable Applications
Manufactured from PE3408/4710, certified to NSF pw, CSA B137.1, ANSI/AWWA C901/C906 and NSF 14/61

SCOPE

This specification sheet designates the requirements for **VERSAPIPE® HD100 PW** high density polyethylene pipe for use in potable water and wastewater transport applications and third party certified by NSF, to CSA B137.1 and ANSI/AWWA C901/C906 standards. It describes the minimum requirements for the design and manufacture of all **VERSAPIPE® HD100 PW** high density polyethylene pipe. Our products also meet the main applicable standards such as ASTM D-3035 and D-2239. The maximum recommended operating temperature for pressure service is 60ºC (140ºF). (See the tables below for more information.)

RAW MATERIAL

All **VERSAPIPE® HD100 PW** high density polyethylene pipe are manufactured from PE3408/4710 high density polyethylene resin meeting the cell classification 445574, or equivalent, as per ASTM D-3350. The raw material is filled with carbon black as an ultra violet inhibitor and can be stored outside. In addition, this pipe is also available in blue color and is protected against UV rays with high quality additives. (See the tables below for more information.)

PRINTLINE

Versaprofiles **VERSAPIPE® HD100 PW** pipe is identified with permanent marking and sequential footage numbering every two (2) feet*:

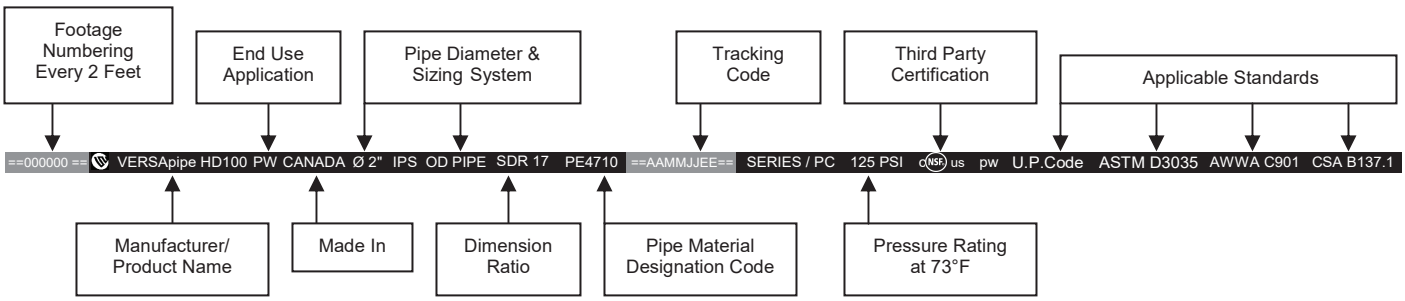

*The example shown here represents 2" SDR17 pipe. Some classifications may vary depending of the pipe application.

HANDLING, JOINING AND INSTALLATION

Do not drag or roll **VERSAPIPE® HD100 PW** pipe across rocks or rough ground. Installation and backfill practices for **VERSAPIPE® HD100 PW** pipe in trenched should comply with guidelines prepared by the Plastic Pipe Institute (PPI)[1], and according to the installation recommendations found in CSA B137.1 standards. **VERSAPIPE® HD100 PW** pipe is connected by heat fusions in accordance with ASTM F2620 and Plastic Pipe Institute (PPI)[2] recommendations. The fittings have to be made of the same type of polyethylene as the pipe itself.

1 : http://plasticpipe.org/pdf/chapter07.pdf
2 : http://plasticpipe.org/pdf/chapter09.pdf

130 Aubé street, Saint-Lazare-de-Bellechasse, QC, G0R 3J0
Ph. **1-877-335-PIPE(7473)** | **418-883-2036** | Fax: 418-883-5044
Email: info@versaprofiles.com | **www.versaprofiles.com**

VERSAPIPE® HD100 PW

High Density Polyethylene IPS and SIDR Pipe for Potable Applications

Manufactured from PE3408/4710, certified to NSF pw, CSA B137.1, ANSI/AWWA C901/C906 and NSF 14/61

RAW MATERIAL PROPERTIES AND CELL CLASSIFICATION AS PER ASTM D3350

Property	Cell Classification (445574)	ASTM Test Method	Typical Values	
			Imperial Units	*SI Units*
Density (natural)	4	D 792	-	0.949 g/cm^3
Melt Index	4	D 1238	-	0.075 g/10min.
Flexural Modulus	5	D 790	150,000 psi	1034 MPa
Tensile Strength at Yield	5	D 638	3,500 psi	24.1 MPa
Resistance to Slow Crack Growth of compound (SCG), hrs. (PENT)	7	F 1473	>5000 h	>5000 h
Hydrostatic Design Basis @ 73°F (23°C)	4	D 2837	1,600 psi	11.0 MPa
Carbon Black Weight Concentration (black option)	C	-	-	2%
UV Stabilizer (blue option)	E	-	Yes	Yes
Elongation at Break		D 638	> 800%	> 800%
IZOD Impact Strength, notched		D 256	> 8.0 pi-lb./po.	> 427 J/m
Brittleness Temperature		D 746	<-180°F	<-118°C
Environmental Stress Crack Resistance		D 1693 (C Condition)	>1,000 h	>1,000 h
Thermal conductivity			0.24 BTU/hr ft °F	0.42 W/m °K

STANDARD PRODUCT SIZES* SDR[1] AS PER ASTM D3035 AND F714

			SDR 17		SDR 15.5		SDR 13.5		SDR 11	
Nominal Pipe Size,IN	Outside Diameter, IN (mm)	Tolerance, IN (mm)	Average Wall Thickness, IN (mm)	Weight for 100 Ft. LBS (Kg)	Average Wall Thickness, IN (mm)	Weight for 100 Ft. LBS (Kg)	Average Wall Thickness, IN (mm)	Weight for 100 Ft. LBS (Kg)	Average Wall Thickness, IN (mm)	Weight for 100 Ft. LBS (Kg)
¾	1.050 (26.67)	± 0.004 (0.10)	0.072 (1.83)	9,20 (4.17)	0.078 (1.98)	9,90 (4.49)	0.088 (2.24)	11,06 (5.02)	0.105 (2.67)	12,96 (5.88)
1	1.315 (33.40)	± 0.005 (0.13)	0.087 (2.21)	13,95 (6.33)	0.094 (2.39)	14,99 (6.80)	0.107 (2.72)	16,88 (7.66)	0.130 (3.30)	20,12 (9.13)
1 ¼	1.660 (42.16)	± 0.005 (0.13)	0.108 (2.74)	21,89 (9.93)	0.117 (2.97)	23,58 (10.70)	0.133 (3.38)	26,53 (12.03)	0.161 (4.09)	31,52 (14.30)
1 ½	1.900 (48.26)	± 0.006 (0.15)	0.122 (3.10)	28,33 (12.85)	0.133 (3.38)	30,70 (13.93)	0.151 (3.84)	34,49 (15.64)	0.184 (4.67)	41,24 (18.71)
2	2.375 (60.31)	± 0.006 (0.15)	0.150 (3.81)	43,59 (19.77)	0.163 (4.14)	47,09 (21.36)	0.187 (4.75)	53,44 (24.24)	0.229 (5.82)	64,19 (29.12)
3	3.500 (88.90)	± 0.008 (0.20)	0.219 (5.56)	93,65 (42.48)	0.240 (6.08)	101,99 (46.26)	0.275 (6.99)	115,64 (52.45)	0.337 (8.56)	139,22 (63.15)
4	4.500 (114.30)	± 0.009 (0.23)	0.281 (7.14)	154,85 (70.24)	0.308 (7.81)	168,38 (76.38)	0.353 (8.97)	191,20 (86.73)	0.434 (11.01)	228,58 (103.68)
6	6.625 (168.28)	± 0.011 (0.28)	0.414 (10.52)	335,47 (152.17)	0.453 (11.49)	364,81 (165.48)	0.521 (13.23)	415,01 (188.25)	0.638 (16.21)	494,70 (224.39)
8	8.625 (219.08)	± 0.013 (0.33)	0.538 (13.67)	567,77 (257.54)	0.590 (14.97)	618,70 (280.64)	0.678 (17.22)	703,27 (319.00)	0.831 (21.11)	845,95 (383.72)

* Ask your account manager about the availability of the displayed sizes. Versaprofiles may also offer options that are not listed in this document.

1 : IPS (Iron Pipe Size) SDR (Outside diameter controlled pipe) pipe dimensions.

130 Aubé street, Saint-Lazare-de-Bellechasse, QC, G0R 3J0
Ph. **1-877-335-PIPE(7473)** | **418-883-2036** | Fax: 418-883-5044
Email: info@versaprofiles.com | **www.versaprofiles.com**

VERSAPIPE® HD100 PW

High Density Polyethylene IPS and SIDR Pipe for Potable Applications

Manufactured from PE3408/4710, certified to NSF pw, CSA B137.1, ANSI/AWWA C901/C906 and NSF 14/61

STANDARD PRODUCT SIZES* SIDR[2] AS PER ASTM D2239

Nominal Pipe Size, IN	Inside Diameter, IN (mm)	Tolerance, IN (mm)	SIDR 11.5		SIDR 9		SIDR 7		SIDR 5.3	
			Average Wall Thickness, IN (mm)	Weight for 100 Ft. LBS (Kg)	Average Wall Thickness, IN (mm)	Weight for 100 Ft. LBS (Kg)	Average Wall Thickness, IN (mm)	Weight for 100 Ft. LBS (Kg)	Average Wall Thickness, IN (mm)	Weight for 100 Ft. LBS (Kg)
¾	0.824 (20.93)	+0.010 -0.015 (+0.25) (-0.38)	0.082 (2.08)	9,70 (4.40)	0.102 (2.59)	12,34 (5.60)	0.128 (3.25)	15,92 (7.22)	0.165 (4.19)	21,31 (9.67)
1	1.049 (26.64)	+0.010 -0.020 (+0.25) (-0.51)	0.101 (2.57)	15,17 (6.88)	0.127 (3.23)	19,51 (8.85)	0.160 (4.06)	25,27 (11.46)	0.210 (5.33)	34,53 (15.66)
1 ¼	1.380 (35.05)	+0.010 -0.020 (+0.25) (-0.51)	0.130 (3.30)	25,64 (11.63)	0.163 (4.14)	32,85 (14.90)	0.209 (5.31)	43,38 (19.68)	0.276 (7.01)	59,70 (27.08)
1 ½	1.610 (40.89)	+0.015 -0.020 (+0.38) (-0.51)	0.150 (3.81)	34,48 (15.64)	0.189 (4.80)	44,41 (20.14)	0.244 (6.20)	59,09 (26.80)	0.322 (8.18)	81,25 (36.85)
2	2.067 (52.50)	+0.015 -0.020 (+0.38) (-0.51)	0.191 (4.85)	56,33 (25.55)	0.244 (6.20)	73,65 (33.41)	0.313 (7.95)	97,12 (44.05)	0.414 (10.52)	134,16 (60.85)

* Ask your account manager about the availability of the displayed sizes. Versaprofiles may also offer options that are not listed in this document.

2 : SIDR (Inside diameter controlled pipe) pipe dimensions.

130 Aubé street, Saint-Lazare-de-Bellechasse, QC, GOR 3J0
Ph. **1-877-335-PIPE(7473)** | **418-883-2036** | Fax: 418-883-5044
Email: info@versaprofiles.com | **www.versaprofiles.com**

VERSAPIPE® HD100 PW

High Density Polyethylene IPS and SIDR Pipe for Potable Applications

Manufactured from PE3408/4710, certified to NSF pw, CSA B137.1, ANSI/AWWA C901/C906 and NSF 14/61

PRESSURE RATING SDR

Pipe Standard Diameter Ratio (SDR)	Standard Pressure Rating (PSIG @ 73°F (23°C))
21	100
17	125
15.5	138
13.5	160
11	200
9	250

PRESSURE RATING SIDR

Pipe Standard Diameter Ratio (SIDR)	Standard Pressure Rating (PSIG @ 73°F (23°C))
19	100
15	125
11.5	160
9	200
7	250
5.3	315

TEMPERATURE COMPENSATING MULTIPLIER

Maximum Pipe Sustained Temperature °F (°C)	Compensating Multiplier
-20 (-29)	2.54
-10 (-23)	2.36
0 (-18)	2.18
10 (-12)	2.00
20 (-7)	1.81
30 (-1)	1.65
40 (4)	1.49
50 (10)	1.32
60 (16)	1.18
73.4 (23)	1.00
80 (27)	0.93
90 (32)	0.82
100 (38)	0.73
110 (43)	0.64
120 (49)	0.58
130 (54)	0.50
140 (60)	0.43

THERMAL EXPANSION CALCULATION

$\Delta L = L\ \alpha\ \Delta T$

Where
ΔL = pipeline length variation, ft
L = pipe length, ft
$\alpha = 10^{-6}$ 67 (thermal expansion coefficient, in/in/ºF)
ΔT = temperature variation, ºF

FLUID VOLUME CALCULATION

$V = \pi\ r^2\ L$

Where
V = volume , ft^3 (m^3)
π = 3.1416…
r = pipe inside radius (ID/2), ft (m)
L = pipe length, ft (m)

Note :For weight calculation, **W = V D**

Where
W = weight, lb
V = calculated volume, ft^3
D = fluid density, lb/ft^3

MINIMUM BENDING RADIUS

Pipe Diameter Ratio (DR)	Minimum Long Term Cold Bending Radius
9 or less	20 X OD
11, 13.5	25 X OD
15.5, 17, 21	27 X OD

OD = Pipe outside diameter.

References :
-ASTM Standards D3035, D3350, D2239, F2620 and F714
-CSA Standards B137.1
-Plastic Pipe Institute (PPI), http://plasticpipe.org/publications/pe_handbook.html

VERSAPROFILES
ISO 9001 : 2008

Versaprofiles can change the information contained in this document without notice. Please contact the customer service to receive an updated version.

130 Aubé street, Saint-Lazare-de-Bellechasse, QC, G0R 3J0
Ph. **1-877-335-PIPE(7473)** | **418-883-2036** | Fax: 418-883-5044
Email: info@versaprofiles.com | **www.versaprofiles.com**

SUBMITTALS IDENTIFICATION SHEET

PROJECT: Wastewater Treatment Plant Upgrade
Iqaluit, Nunavut

CONTRACTOR: Kudlik Construction Ltd, Project 2018-062

Telephone: 867-979-1166

E-mail: srousseau@kudlik.biz

SUBCONTRACTOR:

Person responsible:

Telephone: () E-mail:

PRODUCT SUBMITTED:

☐ As Specified

☑ Alternate

SUPPLIER or MANUFACTURER: Produits BCM

340 Emile Couture

Chicoutimi

Person responsible: Denis Bernier

Telephone: (418)545-1698 E-mail: denis-bernier@produitsbcm.com

DESCRIPTION OF SUBMITTAL: HDPE

# of pages:

Reference to drawings: 6/A424

Reference to specs:

Division: 33 Section: 33 11 17

REMARKS:

Alternate for insulated final effluent line to existing

Sealift delay

REVIEW AND COMMENTS (for use by Consultants):

Pipe must be rated DR11 (200 psi), at a minimum.

STANTEC PROJECT #: 110126045 SUBMITTAL # 003

This review by Stantec is for general conformance with the design concept of Stantec's design of the:

☐ Architectura ☐ Structural ☐ Mechanical ☑ Electrical ☐ Other Civil

component(s) only and does not mean that Stantec has verified or approves the shop drawing(s). The Contractor remains solely responsible for the shop drawing(s) and this review by Stantec does not relieve the Contractor of the Contractor's responsibility for errors or omissions in the shop drawing(s) or for meeting all requirements of the contract documents. This review does not mean that Stantec approves the detailed design inherent in the shop drawing, responsibility for which shall remain with the Contractor submitting same, nor does this review mean that Stantec accepts any deviation of the shop drawing(s) from the contract documents. The Contractor is responsible for confirming all dimensions and correlating them at the job site, for all construction means, methods and techniques, and for coordination of construction work of all trades, including coordination of all shop drawings.

Stantec

☑ REVIEWED

☐ REVIEWED, AS NOTED

☐ REVISE AND RESUBMIT

☐ NOT REVIEWED

DATE 2018-06-12

BY Matt Follett

Review of this submission is for compliance with general intent of the contract. This review does not relieve the Sub-Contractor, Supplier or Manufacturer of responsibility for error or omissions in the submission or the responsibility of meeting all requirements of the contract documents. Any deviation from the contract documents initiated by the Sub-Contractor, Supplier or Manufacturer shall be at their sole risk. QUANTITIES AND DETAIL DIMENSIONS ARE THE SUB-CONTRACTORS OR SUPPLIERS RESPONSIBILITY. VERIFY DATA WITH FIELD DIMENSIONS.

SUBMITTAL TRACKING No.: **CIVIL-003**

2018-06-11

PERFORMANCE PIPE
A DIVISION OF CHEVRON PHILLIPS CHEMICAL COMPANY LP



PERFORMANCE PIPE INDUSTRIAL PRODUCTS

Industrial and Mining Piping Systems

- Chemical Piping
- Dewatering
- Dredging
- Dual Containment
- FM Approved Fire Water Piping
- Ice Rink
- Intake & Outfall Lines
- Irrigation
- Landfill
- Leachate Collection
- Mining Applications
- Power Plants
- Process Piping
- Refineries
- Slurry Lines

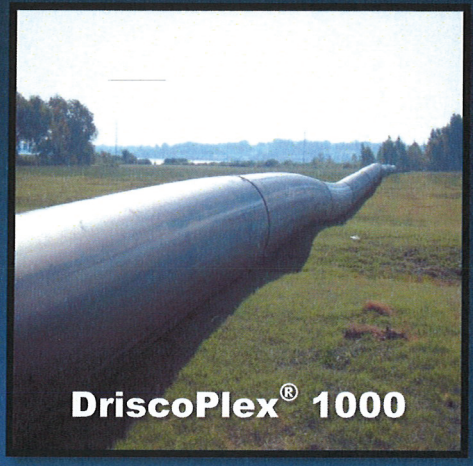

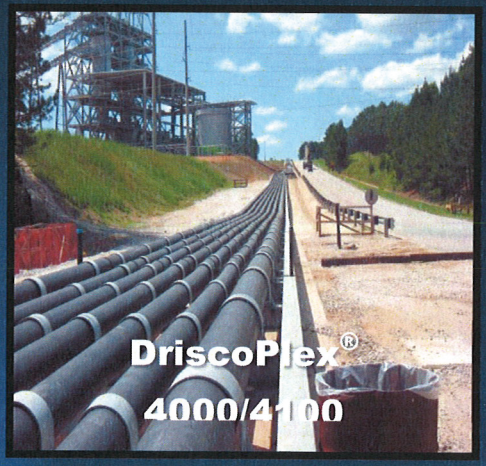

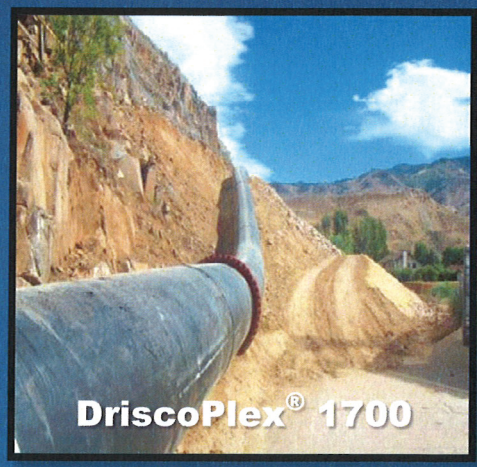



When Performance Matters
Rely on Us!

PERFORMANCE PIPE
A Division of Chevron Phillips Chemical Company LP

IPS Size and Dimension Data
DriscoPlex® Municipal, Industrial & Energy Series

Pressure Ratings are calculated using 0.63 design factor for HDS at 73°F as listed in PPI TR-4 for PE 4710 materials. HDPE can accomodate up to a recurring surge and up to 2.0 times the pipe pressure rating for an occasional surge. Temperature, Chemical, and Environmental use considerations design factors.

Pressure Rating		317 psi DR 7.3			250 psi DR 9.0			200 psi DR 11.0			
Nominal Pipe Size	IPS OD (in)	Minimum Wall (in)	Average ID (in)	Weight (lbs/ft)	Minimum Wall (in)	Average ID (in)	Weight (lbs/ft)	Minimum Wall (in)	Average ID (in)	Weight (lbs/ft)	Minimum Wall (in)
1 1/4"	1.660	0.227	1.179	0.45	0.184	1.270	0.37	0.151	1.340	0.31	0.123
1 1/2"	1.900	0.260	1.349	0.59	0.211	1.453	0.49	0.173	1.533	0.41	0.141
2"	2.375	0.325	1.686	0.92	0.264	1.815	0.77	0.216	1.917	0.64	0.176
3"	3.500	0.479	2.485	1.99	0.389	2.675	1.66	0.318	2.826	1.39	0.259
4"	4.500	0.616	3.194	3.29	0.500	3.440	2.75	0.409	3.633	2.31	0.333
6"	6.625	0.908	4.700	7.12	0.736	5.065	5.96	0.602	5.349	5.00	0.491
8"	8.625	1.182	6.119	12.07	0.958	6.594	10.11	0.784	6.963	8.47	0.639
10"	10.750	1.473	7.627	18.75	1.194	8.219	15.70	0.977	8.679	13.16	0.796
12"	12.750	1.747	9.046	26.38	1.417	9.746	22.08	1.159	10.293	18.51	0.944
14"	14.000	1.918	9.934	31.81	1.556	10.701	26.63	1.273	11.301	22.32	1.037
16"	16.000	2.192	11.353	41.55	1.778	12.231	34.78	1.455	12.915	29.15	1.185
18"	18.000	2.466	12.772	52.58	2.000	13.760	44.02	1.636	14.532	36.89	1.333
20"	20.000	2.740	14.191	64.91	2.222	15.289	54.34	1.818	16.146	45.54	1.481
22"	22.000	3.014	15.610	78.55	2.444	16.819	65.76	2.000	17.760	55.10	1.630
24"	24.000	3.288	17.029	93.48	2.667	18.346	78.25	2.182	19.374	65.58	1.778
26"	26.000				2.889	19.875	91.84	2.364	20.988	76.96	1.926
28"	28.000				3.111	21.405	106.51	2.545	22.605	89.26	2.074
30"	30.000				3.333	22.934	122.27	2.727	24.219	102.47	2.222
32"	32.000				3.556	24.462	139.12	2.909	25.833	116.58	2.370
34"	34.000							3.091	27.447	131.61	2.519
36"	36.000							3.273	29.061	147.55	2.667
42"	42.000							3.818	33.906	200.84	3.111
48"	48.000										
54"	54.000										

This size and dimension chart is intended for reference purposes. It should not be used in place of the advice from a licensed Professional Engineer. accordance with PPI TR-7. Average inside diameter is calculated using IPS OD and Minimum wall plus 6% for use in estimating fluid flows. Actual ID components to fit the pipe ID, refer to pipe dimension and tolerances in the applicable pipe manufacturing specification.

Visit www.performancepipe.com for the most current literature.

© 20(

PERFORMANCE PIPE
A Division of Chevron Phillips Chemical Company LP

IPS Size and Dimension Data
DriscoPlex® Municipal, Industrial & Energy Series

Pressure Ratings are calculated using 0.63 design factor for HDS at 73°F as listed in PPI TR-4 for PE 4710 materials. HDPE can accomodate up to a recurring surge and up to 2.0 times the pipe pressure rating for an occasional surge. Temperature, Chemical, and Environmental use consideratior design factors.

Pressure Rating		125 psi DR 17.0			100 psi DR 21.0			80 psi DR 26.0			
Nominal Pipe Size	IPS OD (in)	Minimum Wall (in)	Average ID (in)	Weight (lbs/ft)	Minimum Wall (in)	Average ID (in)	Weight (lbs/ft)	Minimum Wall (in)	Average ID (in)	Weight (lbs/ft)	Minimum Wall (in)
1 1/4"	1.660										
1 1/2"	1.900										
2"	2.375	0.140	2.078	0.43							
3"	3.500	0.206	3.063	0.94							
4"	4.500	0.265	3.938	1.55	0.214	4.046	1.27				
6"	6.625	0.390	5.798	3.36	0.315	5.957	2.75	0.255	6.084	2.24	0.204
8"	8.625	0.507	7.550	5.69	0.411	7.754	4.66	0.332	7.921	3.80	0.265
10"	10.750	0.632	9.410	8.83	0.512	9.665	7.24	0.413	9.874	5.91	0.331
12"	12.750	0.750	11.160	12.43	0.607	11.463	10.19	0.490	11.711	8.31	0.392
14"	14.000	0.824	12.253	14.98	0.667	12.586	12.28	0.538	12.859	10.02	0.431
16"	16.000	0.941	14.005	19.57	0.762	14.385	16.04	0.615	14.696	13.09	0.492
18"	18.000	1.059	15.755	24.77	0.857	16.183	20.30	0.692	16.533	16.57	0.554
20"	20.000	1.176	17.507	30.58	0.952	17.982	25.07	0.769	18.370	20.45	0.615
22"	22.000	1.294	19.257	37.00	1.048	19.778	30.33	0.846	20.206	24.75	0.677
24"	24.000	1.412	21.007	44.03	1.143	21.577	36.10	0.923	22.043	29.45	0.738
26"	26.000	1.529	22.759	51.67	1.238	23.375	42.36	1.000	23.880	34.57	0.800
28"	28.000	1.647	24.508	59.93	1.333	25.174	49.13	1.077	25.717	40.09	0.862
30"	30.000	1.765	26.258	68.80	1.429	26.971	56.40	1.154	27.554	46.02	0.923
32"	32.000	1.882	28.010	78.28	1.524	28.769	64.17	1.231	29.390	52.36	0.985
34"	34.000	2.000	29.760	88.37	1.619	30.568	72.44	1.308	31.227	59.11	1.046
36"	36.000	2.118	31.510	99.07	1.714	32.366	81.21	1.385	33.064	66.27	1.108
42"	42.000	2.471	36.761	134.84	2.000	37.760	110.54	1.615	38.576	90.20	1.292
48"	48.000	2.824	42.013	176.12	2.286	43.154	144.38	1.846	44.086	117.81	1.477
54"	54.000	3.176	47.266	222.90	2.571	48.549	182.73	2.077	49.597	149.10	1.662

This size and dimension chart is intended for reference purposes. It should not be used in place of the advice from a licensed Professional Engineer. accordance with PPI TR-7. Average inside diameter is calculated using IPS OD and Minimum wall plus 6% for use in estimating fluid flows. Actual IE components to fit the pipe ID, refer to pipe dimension and tolerances in the applicable pipe manufacturing specification.

Visit www.performancepipe.com for the most current literature.

© 20(

SUBMITTALS IDENTIFICATION SHEET

PROJECT: Wastewater Treatment Plant Upgrade
Iqaluit, Nunavut

CONTRACTOR: Kudlik Construction Ltd, Project 2018-062

Telephone: 867-979-1166

E-mail: srousseau@kudlik.biz

SUBCONTRACTOR:

Person responsible:

Telephone: () E-mail:

PRODUCT SUBMITTED:

☐ As Specified

☐ Alternate

SUPPLIER or MANUFACTURER: Produits BCM

340 Emile Couture

Chicoutimi

Person responsible: Denis Bernier

Telephone: (418)545-1698 E-mail: denis-bernier@produitsbcm.com

DESCRIPTION OF SUBMITTAL: Effluent

# of pages:

Reference to drawings: C501

Reference to specs:

Division: 33 Section: 33 11 17

REMARKS:

REVIEW AND COMMENTS (for use by Consultants):

STANTEC PROJECT #: 110126045

SUBMITTAL # Civil-004

This review by Stantec is for general conformance with the design concept of Stantec's design of the:

☐ Architectural ☐ Structural ☐ Mechanical ☑ Electrical ☐ Other Civil

component(s) only and does not mean that Stantec has verified or approves the shop drawing(s). The Contractor remains solely responsible for the shop drawing(s) and this review by Stantec does not relieve the Contractor of the Contractor's responsibility for errors or omissions in the shop drawing(s) or for meeting all requirements of the contract documents. This review does not mean that Stantec approves the detailed design inherent in the shop drawing, responsibility for which shall remain with the Contractor submitting same, nor does this review mean that Stantec accepts any deviation of the shop drawing(s) from the contract documents. The Contractor is responsible for confirming all dimensions and correlating them at the job site, for all construction means, methods and techniques, and for coordination of construction work of all trades, including coordination of all shop drawings.

Stantec

☑ REVIEWED

☐ REVIEWED, AS NOTED

☐ REVISE AND RESUBMIT

☐ NOT REVIEWED

DATE 2018-07-10

BY Matt Follett

Review of this submission is for compliance with general intent of the contract. This review does not relieve the Sub-Contractor, Supplier or Manufacturer of responsibility for error or omissions in the submission or the responsibility of meeting all requirements of the contract documents. Any deviation from the contract documents initiated by the Sub-Contractor, Supplier or Manufacturer shall be at their sole risk. QUANTITIES AND DETAIL DIMENSIONS ARE THE SUB-CONTRACTORS OR SUPPLIERS RESPONSIBILITY. VERIFY DATA WITH FIELD DIMENSIONS.

SUBMITTAL TRACKING No.: **CIVIL-004**

2018-06-15

45° LATERAL REDUCING WYES (continued)

Size	Wt.	CAST IRON Item No.	DUCTILE IRON Item No.	A	B	C	T	T1
48 x 14	7,275		DFY4814	65.00	9.00	65.00	1.42	0.66
48 x 16	7,400		DFY4816	65.00	9.00	65.00	1.42	0.70
48 x 18	7,620		DFY4818	65.00	9.00	65.00	1.42	0.75
48 x 20	7,685		DFY4820	65.00	9.00	65.00	1.42	0.80
48 x 24	6,840		DFY4824	58.00	5.00	64.00	1.42	0.89
48 x 30	8,015		DFY4830	63.00	9.00	68.00	1.42	1.03
48 x 36	8,970		DFY4836	69.00	7.00	72.00	1.42	1.15
48 x 42	11,010		DFY4842	77.00	12.00	77.00	1.42	1.28
54 x 36			DFY5436	78.00	12.00	78.00	1.05	0.77
54 x 42			DFY5442	80.00	12.00	80.00	0.90	0.82
60 x 36			DFY6036	80.00	12.00	80.00	0.94	0.66
64 x 36			DFY6436	100.00	10.00	105.00	1.16	0.77

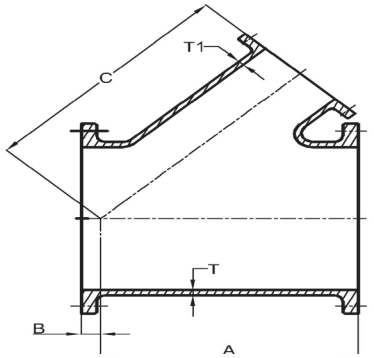

45° Lateral Reducing Wyes

CONCENTRIC REDUCERS

Size	Wt.	CAST IRON Item No.	DUCTILE IRON Item No.	L	T	T1
2 1/2 x 2		CFR252	DFR252	6.00	0.48	0.31
3 x 2	16	CFR32	DFR32	6.00	0.48	0.31
3 x 2 1/2	21	CFR325	DFR325	6.00	0.48	0.31
4 x 2	25	CFR42	DFR42	7.00	0.52	0.31
4 x 2 1/2	28	CFR425	DFR425	7.00	0.52	0.31
4 x 3	30	CFR43	DFR43	7.00	0.52	0.48
6 x 2	35	CFR62	DFR62	9.00	0.55	0.31
6 x 2 1/2	38	CFR625	DFR625	9.00	0.55	0.31
6 x 3	40	CFR63	DFR63	9.00	0.55	0.48
6 x 4	45	CFR64	DFR64	9.00	0.55	0.52
6 x 5	51	CFR65	DFR65	10.00	0.55	0.52
8 x 4	65	CFR84	DFR84	11.00	0.60	0.52
8 x 5	70	CFR85	DFR85	11.00	0.60	0.52
8 x 6	75	CFR86	DFR86	11.00	0.60	0.55
10 x 4	85	CFR104	DFR104	12.00	0.68	0.52
10 x 6	90	CFR106	DFR106	12.00	0.68	0.55
10 x 8	110	CFR108	DFR108	12.00	0.68	0.60
12 x 4	120	CFR124	DFR124	14.00	0.75	0.52
12 x 6	130	CFR126	DFR126	14.00	0.75	0.55
12 x 8	145	CFR128	DFR128	14.00	0.75	0.60
12 x 10	170	CFR1210	DFR1210	14.00	0.75	0.68
14 x 6	155	CFR146	DFR146	16.00	0.66	0.55
14 x8	175	CFR148	DFR148	16.00	0.66	0.60
14 x 10	190	CFR1410	DFR1410	16.00	0.66	0.68
14 x 12	220	CFR1412	DFR1412	16.00	0.66	0.75
16x6	190	CFR166	DFR166	18.00	0.70	0.55
16 x 8	210	CFR168	DFR168	18.00	0.70	0.60
16 x 10	235	CFR1610	DFR1610	18.00	0.70	0.68
16 x 12	265	CFR1612	DFR1612	18.00	0.70	0.75
16 x 14	280	CFR1614	DFR1614	18.00	0.70	0.66
18 x 6			DFR186	19.00	0.75	0.55
18 x 8	240	CFR188	DFR188	19.00	0.75	0.60
18 x 10	265	CFR1810	DFR1810	19.00	0.75	0.68
18 x 12	295	CFR1812	DFR1812	19.00	0.75	0.75
18 x 14	310	CFR1814	DFRI814	19.00	0.75	0.66
18 x 16	340	CFR1816	DFR1816	19.00	0.75	0.70
20 x 6			DFR206	20.00	0.80	0.55
20 x 8			DFR208	20.00	0.80	0.60
20 x 10	310	CFR2010	DFR2010	20.00	0.80	0.68
20 x 12	345	CFR2012	DFR2012	20.00	0.80	0.75
20 x 14	355	CFR2014	DFR2014	20.00	0.80	0.66
20 x 16	390	CFR2016	DFR2016	20.00	0.80	0.70
20 x 18	410	CFR2018	DFR2018	20.00	0.80	0.75
24 x 6			DFR246	24.00	0.89	0.55
24 x 10			DFR2410	24.00	0.89	0.68
24 x 12	480	CFR2412	DFR2412	24.00	0.89	0.75
24 x 14	490	CFR2414	DFR2414	24.00	0.89	0.66
24 x 16	525	CFR2416	DFR2416	24.00	0.89	0.70

Size	Wt.	CAST IRON Item No.	DUCTILE IRON Item No.	L	T	T1
24 x 18	550	CFR2418	DFR2418	24.00	0.89	0.75
24 x 20	590	CFR2420	DFR2420	24.00	0.89	0.80
30 x 6			DFR306	30.00	1.03	0.55
30 x 16			DFR3016	30.00	1.03	0.70
30 x 18	810	CFR3018	DFR3018	30.00	1.03	0.75
30 x 20	870	CFR3020	DFR3020	30.00	1.03	0.80
30 x 24	970	CFR3024	DFR3024	30.00	1.03	0.89
36 x 14			DFR3614	36.00	1.15	0.66
36 x 16			DFR3616	36.00	1.15	0.70
36 x 18			DFR3618	36.00	1.15	0.75
36 x 20	1,230	CFR3620	DFR3620	36.00	1.15	0.80
36 x 24	1,345	CFR3624	DFR3624	36.00	1.15	0.89
36 x 30	1,555	CFR3630	DFR3630	36.00	1.15	1.03
42 x 24	1,820	CFR4224	DFR4224	42.00	1.28	0.89
42 x 30	2,060	CFR4230	DFR4230	42.00	1.28	1.03
42 x 36	2,345	CFR4236	DFR4236	42.00	1.28	1.15
48 x 14			DFR4814	48.00	1.42	0.66
48 x 24			DFR4824	48.00	1.42	0.89
48 x 30	2,625	CFR4830	DFR4830	48.00	1.42	1.03
48 x 36	2,950	CFR4836	DFR4836	48.00	1.42	1.15
48 x 42	3,320	CFR4842	DFR4842	48.00	1.42	1.28
54 x 36			DFR5436	28.00	0.90	0.66
54 x 48	1,695	CFR5448	DFR5448	18.00	0.90	0.80
60 x 36			DFR6036	32.00	0.94	0.66
60 x 48			DFR6048	32.00	0.94	0.80
60 x 54			DFR6054	15.00	0.94	0.90
72 x 36			DFR7236	40.00	1.40	1.15
72 x 48			DFR7248	40.00	1.40	1.40
72 x 54			DFR7254	40.00	1.40	0.90

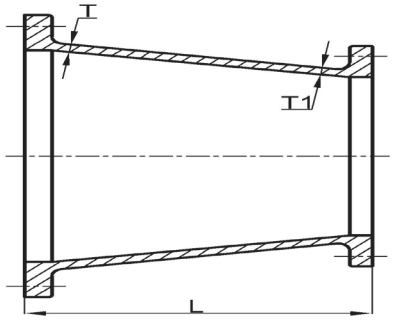

Concentric Reducers

Note: Cast Iron fittings available upon request
Weights in Pounds, Less Accessories / Dimensions in inches

Quality – Service – Commitment – Delivered.

C110 DUCTILE IRON FLANGED FITTINGS

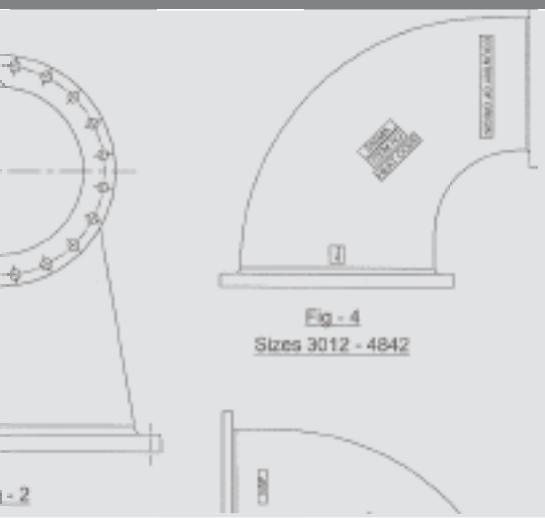

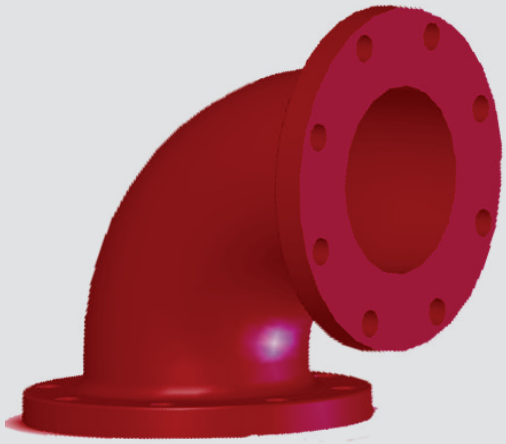



C110 DUCTILE IRON FLANGED FITTINGS
BASIC SPECIFICATIONS

SIZES:
- 2” - 64”

MATERIAL:
- Ductile Iron ASTM A536 Grade 60-42-10, 65-45-12 or 70-50-05.

PRESSURE:
- 250 PSI Water Working Pressure for Ductile Iron sizes 2” - 48”.
- 150 PSI Water Working Pressure for Ductile Iron sizes 54” - 64”.

TESTING:
- In accordance with ANSI / AWWA C110 / A21.10 where applicable.
- Other items are in accordance with manufacturer’s standards.
- 54” and above Flanged Fittings are manufactured as per AWWA C153/A21.53.
- All fittings are hydrostatically tested in accordance with SIGMA Quality Management Standard.
- All fittings are heat coded to ensure traceability and verification of metallurgical properties in accordance with SIGMA Quality Management Standards.

LAYING LENGTH:
- In accordance with ANSI / AWWA C110 / A21.10 where applicable.
- Other items are in accordance with manufacturer’s standards.
- 54” and above Flanged Fittings are manufactured as per AWWA C153/A21.53.

CEMENT LINING:
- Double cement lined in accordance with ANSI/AWWA C104 / A21.4.

COATING:
- Interior of fitting is seal coated (asphalt material) in accordance with ANSI / AWWA C104/A21.4 and NSF61 approved.
- Red Primer Outside.
- For special conditions, other types of coatings and linings are available.
- Please specify when ordering.

GASKETS:
- SBR in accordance with ANSI/AWWA C111/A21.11 & ANSI/AWWA C111/A21.11.
- Also available in EPDM, NBR and CR.

APPROVALS:
- 2”-16” Underwriters Laboratories listed and Factory Mutual Approved.

STANDARDS:
- Certified to NSF61 Standard including Annex G & 372.
- ANSI / AWWA C110 / A21.10 Where applicable.
- Other items are in accordance with manufacturer’s standards.
- 54” and above Flanged Fittings are manufactured as per AWWA C153/A21.53.

INSTALLATION:
- Per ANSI/AWWA C600 and C111 using DIP conforming to C150/C151 and PVC pipe conforming to C900/C905.

SIGMA Corporation
700 Goldman Drive
Cream Ridge, NJ 08514
800 999 2550 p
609 758 1163 f
crm-sales@sigmaco.com
www.sigmaco.com

C110 FLANGED FITTINGS

INDEX

BENDS

90° Bends 4
45° Bends 4
22 1/2° Bends 4
11 1/4° Bends 5
90° Reducing Bends 5-6
90° Long Radius Bends 6
45° Long Radius Reducing Bends 6
90° Long Radius Reducing Bends 7
90° Long Radius Base Bends 8
90°Base Bends 8
Reducing Base Bends 8
90° Side Outlet Bend 9

TEES

Tees & Crosses 9
Bullhead Tees 9
Reducing Tees 10-11
Base Tees 13
Reducing Base Tees 13-14

CROSSES

Reducing Crosses 11-12

WYES

45° Lateral Wyes 14
45° Lateral Reducing Wyes 15-16
True Wyes 17

REDUCERS

Concentric Reducers 16
Eccentric Reducers 17

BLIND FLANGES - Solid and Tapped 18
Threaded Flanges 18
SLUDGE SHOES 18

FLARES

Straight Flare Pieces 19
90° Flare Bends 19
90° Flare Long Radius Bends 19

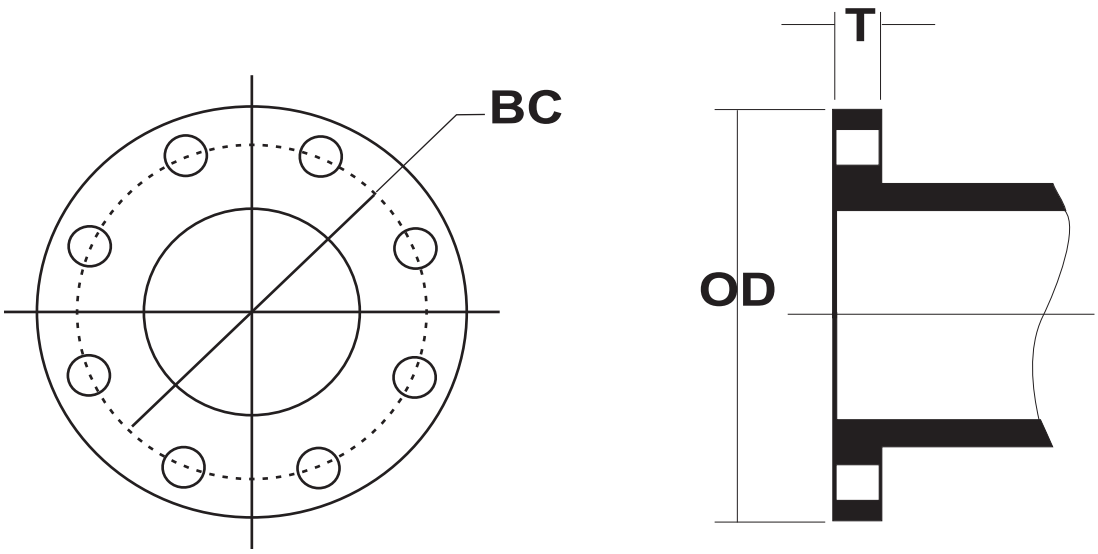

Size	OD	BC	T	Hole Dia.	Bolt Size	No. Bolts
2	6.00	4.75	0.62	0.75	5/8 x 2 1/2	4
3	7.50	6.00	0.75	0.75	5/8 x 2 1/2	4
4	9.00	7.50	0.94	0.75	5/8 x 3	8
5	10.00	8.50	0.94	0.88	3/4 x 3	8
6	11.00	9.50	1.00	0.88	3/4 x 3 1/2	8
8	13.50	11.75	1.12	0.88	3/4 x 3 1/2	8
10	16.00	14.25	1.19	1.00	7/8 x 4	12
12	19.00	17.00	1.25	1.00	7/8 x 4	12
14	21.00	18.75	1.38	1.12	1 x 4 1/2	12
16	23.50	21.25	1.44	1.12	1 x 4 1/2	16
18	25.00	22.75	1.56	1.25	1 1/8 x 5	16
20	27.50	25.00	1.69	1.25	1 1/8 x 5	20
24	32.00	29.50	1.88	1.37	1 1/4 x 5 1/2	20
30	38.75	36.00	2.12	1.37	1 1/4 x 6 1/2	28
36	46.00	42.75	2.38	1.62	1 1/2 x 7	32
42	53.00	49.50	2.62	1.62	1 1/2 x 7 1/2	36
48	59.50	56.00	2.75	1.62	1 1/2 x 8	44
54	66.25	62.75	3.00	2.00	1 3/4 x 8 1/2	44
60	73.00	69.25	3.12	2.00	1 3/4 x 9	52
64*	80.00	76.00	3.38	2.00	1 3/4 x 9	52

** Contact SIGMA for available fittings.*

FM APPROVED
AWWA Member
UL
NSF Certified to ANSI/NSF 61

Note: Cast Iron fittings available upon request
Weights in Pounds, Less Accessories / Dimensions in inches

C110 FLANGED FITTINGS

BENDS, 1/4 90°

Size	Wt.	CAST IRON Item No.	DUCTILE IRON Item No.	A	R	T
2	16	CFB290	DFB290	4.50	3.00	0.31
2.5			DFB2.590	5.00	3.50	0.31
3	25	CFB390	DFB390	5.50	4.00	0.48
4	45	CFB490	DFB490	6.50	4.50	0.52
5	52	CFB590	DFB590	7.50	5.50	0.52
6	65	CFB690	DFB690	8.00	6.00	0.55
8	105	CFB890	DFB890	9.00	7.00	0.60
10	165	CFB1090	DFB1090	11.00	9.00	0.68
12	235	CFB1290	DFB1290	12.00	10.00	0.75
14	290	CFB1490	DFB1490	14.00	11.50	0.66
16	370	CFB1690	DFB1690	15.00	12.50	0.70
18	450	CFB1890	DFB1890	16.50	14.00	0.75
20	580	CFB2090	DFB2090	18.00	15.50	0.80
24	900	CFB2490	DFB2490	22.00	18.50	0.89
30	1,430	CFB3090	DFB3090	25.00	21.50	1.03
36	2,135	CFB3690	DFB3690	28.00	24.50	1.15
42	3,055	CFB4290	DFB4290	31.00	27.50	1.28
48	4,095	CFB4890	DFB4890	34.00	30.50	1.42
54	3,740	CFB5490	DFB5490	39.00	33.50	0.90
60	4,965	CFB5490	DFB6090	43.00	36.50	0.94

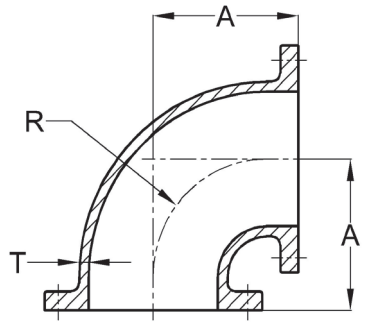

FLXFL Bend 90°

BENDS, 1/8 45°

Size	Wt.	CAST IRON Item No.	DUCTILE IRON Item No.	A	R	T
2	12	CFB245	DFB245	2.50	2.41	0.31
2.5		CFB2545	DFB2545	3.00	3.62	0.48
3	20	CFB345	DFB345	3.00	3.62	0.48
4	40	CFB445	DFB445	4.00	4.81	0.52
5	45	CFB545	DFB545	4.50	6.04	0.52
6	55	CFB645	DFB645	5.00	7.25	0.55
8	90	CFB845	DFB845	5.50	8.44	0.60
10	130	CFB1045	DFB1045	6.50	10.88	0.68
12	195	CFB1245	DFB1245	7.50	13.25	0.75
14	220	CFB1445	DFB1445	7.50	12.06	0.66
16	280	CFB1645	DFB1645	8.00	13.25	0.70
18	325	CFB1845	DFB1845	8.50	14.50	0.75
20	430	CFB2045	DFB2045	9.50	16.88	0.80
24	630	CFB2445	DFB2445	11.00	18.12	0.89
30	1,120	CFB3045	DFB3045	15.00	27.75	1.03
36	1,755	CFB3645	DFB3645	18.00	35.00	1.15
42	2,600	CFB4245	DFB4245	21.00	42.25	1.28
48	3,580	CFB4845	DFB4845	24.00	49.50	1.42
54	2,735	CFB5445	DFB5445	20.50	55.68	0.90

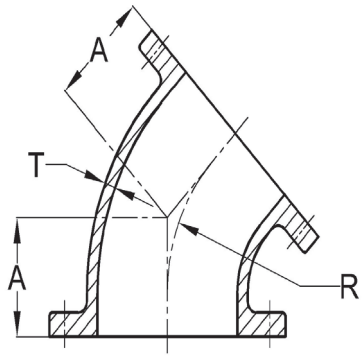

FLXFL Bend 45°

BENDS, 1/16 22-1/2°

Size	Wt.	CAST IRON Item No.	DUCTILE IRON Item No.	A	R	T
2	12	CFB222	DFB222	2.50	6.04	0.31
3	20	CFB322	DFB322	3.00	7.56	0.48
4	40	CFB422	DFB422	4.00	10.06	0.52
5	45	CFB522	DFB522	4.50	10.86	0.52
6	55	CFB622	DFB622	5.00	15.06	0.55
8	90	CFB822	DFB822	5.50	17.62	0.60
10	135	CFB1022	DFB1022	6.50	22.62	0.68
12	205	CFB1222	DFB1222	7.50	27.62	0.75
14	225	CFB1422	DFB1422	7.50	25.12	0.66
16	285	CFB1622	DFB1622	8.00	27.62	0.70
18	335	CFB1822	DFB1822	8.50	30.19	0.75
20	435	CFB2022	DFB2022	9.50	35.19	0.80
24	640	CFB2422	DFB2422	11.00	37.69	0.89
30	1,135	CFB3022	DFB3022	15.00	57.81	1.03
36	1,790	CFB3622	DFB3622	18.00	72.88	1.15
42	2,665	CFB4222	DFB4222	21.00	88.00	1.28
48	3,665	CFB4822	DFB4822	24.00	103.06	1.42
54	2,260	CFB5422	DFB5422	14.00	50.00	0.90
60	2,985	CFB6022	DFB6022	14.00	48.50	0.94

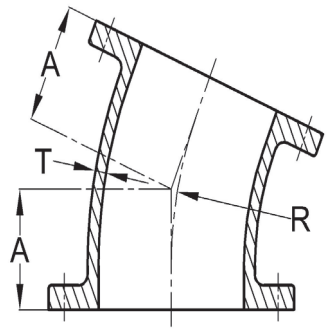

FLXFL Bend 22-1/2°

Note: Cast Iron fittings available upon request
Weights in Pounds, Less Accessories / Dimensions in inches

DESIGN-FLOW®

Convoluted - Epoxy Coated & Galvanized DI

IPS Bolt Rings (cont.)

Designed Specifically for use with HDPE Flange Adapters*

ASME / ANSI B16.5, B16.47Ser.A CL150 B16.1 CL125 AWWA C207 B,D & E

(Dimensions in Inches)

U.S. Patent # 7,401,821

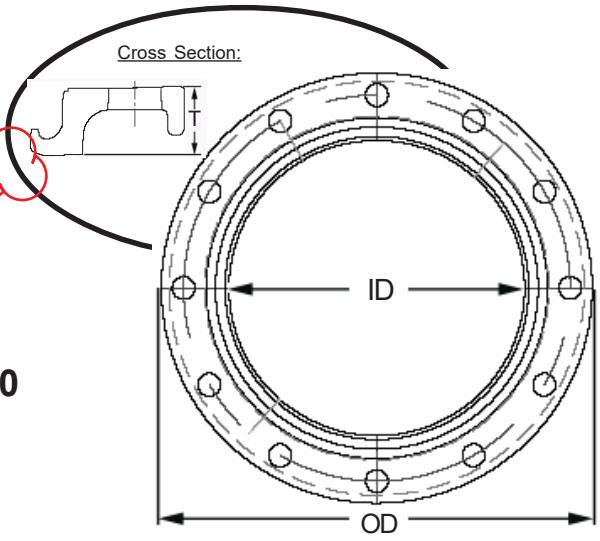

IPS Nominal Size	T (Thickness)	OD	ID	Bolt Hole Circle	Number Of Bolt Holes	Diameter Of Bolt Holes	WPR (psi)	Weight (lbs)
16"	1.63 1.84	23.50	16.19	21.25	16	1-1/8"	200 335	39 48
18"	1.70 2.00	25.00	18.38	22.75	16	1-1/4"	200 335	42 53
20"	1.84 2.23	27.50	20.38	25.00	20	1-1/4"	200 335	57 70
22"	2.41	29.50	22.38	27.25	20	1-3/8"	335	80
24"	2.16 2.56	32.00	24.38	29.50	20	1-3/8"	200 335	80 103
26"	2.50	34.25	26.38	31.75	24	1-3/8"	250	109
28"	2.59	36.50	28.38	34.00	28	1-3/8"	250	130
30"	2.28 2.47	38.75	30.38	36.00	28	1-3/8"	130 200	118 139
32"	2.56	41.75	32.38	38.50	28	1-5/8"	200	165
34"	2.88	43.75	34.38	40.50	32	1-5/8"	200	191
36"	2.75 3.00	46.00	36.38	42.75	32	1-5/8"	130 200	193 214
42"	3.25	53.00	42.38	49.50	36	1-5/8"	130	265
48"	3.63	59.50	48.50	56.00	44	1-5/8"	100	354
54"	4.03	66.25	54.62	62.75	44	1-7/8"	100	519

WPR (working pressure rating) is for free-floating rings on HDPE flange adapters and includes a 2:1 safety factor. These are cast convoluted ductile-iron metal bolt rings with 150# bolt-hole pattern; primed and surfaced with an epoxy based paint; the material is in compliance with ASTM A536 GR 65/45/12. Rings also available with galvanized coating.

SUBMITTALS IDENTIFICATION SHEET

PROJECT: Wastewater Treatment Plant Upgrade
Iqaluit, Nunavut

CONTRACTOR: Kudlik Construction Ltd, Project 2018-062

Telephone: 867-979-1166

E-mail: srousseau@kudlik.biz

SUBCONTRACTOR:

Person responsible:

Telephone: () E-mail:

PRODUCT SUBMITTED:

☐ As Specified

☐ Alternate

SUPPLIER or MANUFACTURER: Produits BCM

340 Emile Couture

Chicoutimi

Person responsible: Denis Bernier

Telephone: (418)545-1698 E-mail: denis-bernier@produitsbcm.com

DESCRIPTION OF SUBMITTAL: Effluent

# of pages:

Reference to drawings:

Reference to specs:

Division: 33 Section: 33 11 17

REMARKS:

please confirm if you prefer a 90 degrees or 2 x 45 degrees for elbow?

REVIEW AND COMMENTS (for use by Consultants):

STANTEC PROJECT #: 110126045 SUBMITTAL #

This review by Stantec is for general conformance with the design concept of Stantec's design of the:

☐ Architectural ☐ Electrical
☐ Structural ☑ Other
☐ Mechanical

component(s) only and does not mean that Stantec has verified or approves the shop drawing(s). The Contractor remains solely responsible for the shop drawing(s) and this review by Stantec does not relieve the Contractor of the Contractor's responsibility for errors or omissions in the shop drawing(s) or for meeting all requirements of the contract documents. This review does not mean that Stantec approves the detailed design inherent in the shop drawing, responsibility for which shall remain with the Contractor submitting same, nor does this review mean that Stantec accepts any deviation of the shop drawing(s) from the contract documents. The Contractor is responsible for confirming all dimensions and correlating them at the job site, for all construction means, methods and techniques, and for coordination of construction work of all trades, including coordination of all shop drawings.

Stantec

☐ REVIEWED
☑ REVIEWED, AS NOTED
☐ REVISE AND RESUBMIT
☐ NOT REVIEWED

DATE June 22, 2018

BY Glenn Prosko

Provide 90 degree elbow

Review of this submission is for compliance with general intent of the contract. This review does not relieve the Sub-Contractor, Supplier or Manufacturer of responsibility for error or omissions in the submission or the responsibility of meeting all requirements of the contract documents. Any deviation from the contract documents initiated by the Sub-Contractor, Supplier or Manufacturer shall be at their sole risk. QUANTITIES AND DETAIL DIMENSIONS ARE THE SUB-CONTRACTORS OR SUPPLIERS RESPONSIBILITY. VERIFY DATA WITH FIELD DIMENSIONS.

SUBMITTAL TRACKING No.: **CIVIL-005**

2018-06-19

90° ELBOW FABRICATED THREE-SEGMENT MITERED BEND

Codo De 90° Fabricado De Tres Segmentos



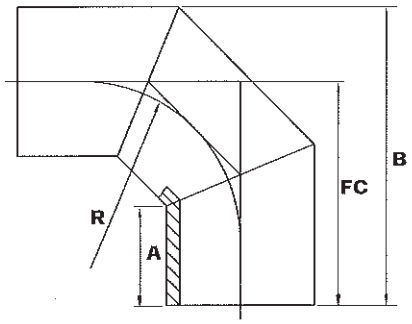

DR	32.5	26	21	17	15.5	13.5	11	9	7
Pressure Rating Resistencia a la Presión	31 psi	41 psi	54 psi	71 psi	81 psi	96 psi	126 psi	164 psi	229 psi

Nominal Size (in) Tamaño nominal	Actual OD (in) DE Actual	A (in)	B (in)	FC (in)	R (in)
2	2.375	4.5	10.06	8.87	6.62
3	3.5	4.5	11.18	9.43	7.18
4	4.5	4.5	12.18	9.93	7.68
6	6.625	5.5	16.01	12.7	9.95
8	8.625	6.5	19.72	15.41	12.16
10	10.75	6.5	21.5	16.13	12.63
12	12.75	8.5	25.5	19.12	13.63
14	14	8.5	26.75	19.75	14.25
16	16	8.5	28.75	20.75	15.25
18	18	8.5	30.75	21.75	16.25
20	20	8.5	32.75	22.75	17.25
22	22	8.5	37.57	26.57	23.07
24	24	8.5	39.57	27.57	24.07
26	26	10	43.9	30.9	26.5
28	28	10	46.5	32.5	28.5
30	30	10	49.1	34.1	30.5
32	32	10	54.9	38.9	38
36	36	10	60.6	42.6	43
42	42	16	75	54	50
48	48	16	83.9	59.9	58
54	54	16	91.7	64.7	64
63	63	18	96.18	64.7	57.4

1. Some size/DR combinations may have limited availability.

1. Algunos Tamaño / DR Combinaciones puede tener disponibilidad limitada.

For reference only. Actual dimensions may vary.
Solo para referencia. Las dimensiones reales pueden variar.

45° ELBOW FABRICATED THREE-SEGMENT MITERED BEND

Codo De 45° Fabricato De Tres Segmentos

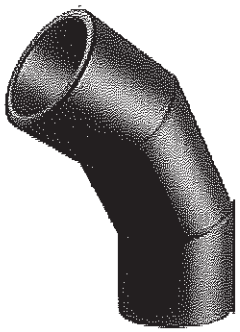

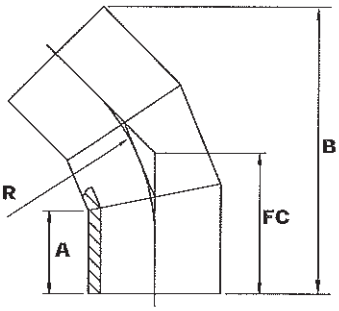

DR	32.5	26	21	17	15.5	13.5	11	9	7
Pressure Rating Resistencia a la Presión	42 psi	55 psi	72 psi	92 psi	103 psi	126 psi	161 psi	202 psi	274 psi

Nominal Size (in) Tamaño nominal	Actual OD (in) DE Actual	A (in)	B (in)	FC (in)	R (in)
2	2.375	4	12.9	7	13.125
3	3.5	4	13.69	7.25	13.625
4	4.5	5	16.11	8.5	14.25
6	6.625	6	19.32	10	15.25
8	8.625	6.5	21.58	10.875	16.25
10	10.75	6.5	23.09	11.25	17.25
12	12.75	8	27.52	13.5	19.5
14	14	8	28.64	13.875	21
16	16	8	30.74	14.75	24
18	18	8	33.08	15.625	27
20	20	8	35.19	16.5	30
22	22	8	37.3	17.25	33
24	24	8	39.4	18.250	36
26	26	14	51.85	25	39
28	28	14	54.09	25.88	42
30	30	14	56.2	26.625	45
32	32	14	58.31	27.5	48
36	36	14	62.52	29.22	54
42	42	21	81.02	38.75	63
48	48	21	87.34	41.25	72
54	54	21	93.9	43.75	81
63	63	21	100.3	45.7	85.5

1. Some size/DR combinations may have limited availability.

1. Algunos Tamaño / DR Combinaciones puede tener disponibilidad limitada.

For reference only. Actual dimensions may vary.
Solo para referencia. Las dimensiones reales pueden variar.

CONCENTRIC REDUCER

Reductor Concéntrico

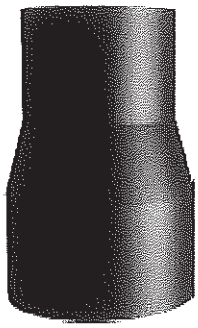

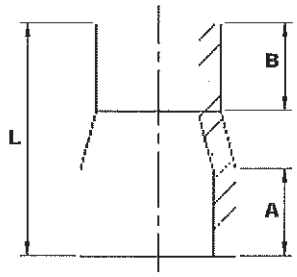

DR	32.5	26	21	17	15.5	13.5	11	9	7
Pressure Rating Resistencia a la Presión	63 psi	80 psi	100 psi	125 psi	138 psi	160 psi	200 psi	250 psi	333 psi

Nominal Size (in) Tamaño nominal	A (in)	B (in)	L (in)
1 x ½	1.5	1.25	4
1 x ¾	1.5	1.75	4.5
1¼ x 1	1.86	1.92	4.25
1½ x ¾	2.5	2.4	5.69
1½ x 1	2.5	2.28	5.75
1½ x 1¼	1.88	2	4
2 x ¾	3.25	1.25	6.25
2 x 1	2.49	2.88	6.31
2 x 1¼	3.15	2.56	6.44
2 x 1½	2.5	2.72	6
3 x 2	3.22	2.5	6.65
4 x 2	3	3	11.87
4 x 3	3.13	3.13	8.62
5 x 4	1.75	1.25	3.75
6 x 3	5.12	3.94	11.42
6 x 4	4.22	3.75	9.13
6 x 5	4.8	4.15	11.2
8 x 4	4.65	3.55	11.425
8 x 6	5	4.64	10.7
10 x 6	6	6	12
10 x 8	6.63	6.25	14.98
12 x 8	6	6	16
12 x 10	6.63	6.25	14.88
14 x 10	7	7	14

Nominal Size (in) Tamaño nominal	A (in)	B (in)	L (in)
14 x 12	7	7	18
16 x 12	7	7	14
16 x 14	7	7	18
18 x 12	8	8	19
18 x 14	7	7	14
18 x 16	7	7	18
20 x 18	7	7	14
22 x 20	8	8	20
24 x 18	8	8	19
24 x 20	9	9	18
24 x 22	8	8	17
26 x 24	8	8	17
28 x 26	8	8	17
30 x 24	8	8	18
30 x 28	8	8	19
32 x 30	8	8	17
34 x 32	8	8	17
36 x 30	8	8	19
36 x 32	8	8	18
36 x 34	8	8	17
42 x 36	10	10	23
48 x 42	16.5	16.5	36
54 x 48	16.5	16.5	36
63 x 54	16.5	16.5	37.5

SUBMITTALS IDENTIFICATION SHEET

PROJECT: Wastewater Treatment Plant Upgrade
Iqaluit, Nunavut

CONTRACTOR: Kudlik Construction Ltd, Project 2018-062

Telephone: 867-979-1166

E-mail: srousseau@kudlik.biz

SUBCONTRACTOR:

Person responsible:

Telephone: () E-mail:

PRODUCT SUBMITTED:

☐ As Specified

☐ Alternate

SUPPLIER or MANUFACTURER:

Person responsible:

Telephone: E-mail:

DESCRIPTION OF SUBMITTAL: signalization /traffic

# of pages:

Reference to drawings: 6/A424

Reference to specs:

Division: 33 Section:

REMARKS:

REVIEW AND COMMENTS (for use by Consultants):

STANTEC PROJECT #: 110126045 SUBMITTAL # Civil 006

This review by Stantec is for general ~~conformance~~ with the design concept of Stantec's design of the:

☐ Architectura ☐ Electrical
☐ I Structural ☑ Other Civil
☐ Mechanical

component(s) only and does not mean that Stantec has verified or approves the shop drawing(s). The Contractor remains solely responsible for the shop drawing(s) and this review by Stantec does not relieve the Contractor of the Contractor's responsibility for errors or omissions in the shop drawing(s) or for meeting all requirements of the contract documents. This review does not mean that Stantec approves the detailed design inherent in the shop drawing, responsibility for which shall remain with the Contractor submitting same, nor does this review mean that Stantec accepts any deviation of the shop drawing(s) from the contract documents. The Contractor is responsible for confirming all dimensions and correlating them at the job site, for all construction means, methods and techniques, and for coordination of construction work of all trades, including coordination of all shop drawings.

Stantec

☑ REVIEWED

☐ REVIEWED, AS NOTED

☐ REVISE AND RESUBMIT

☐ NOT REVIEWED

DATE 2018-08-21

BY Matt Follett

Review of this submission is for compliance with general intent of the contract. This review does not relieve the Sub-Contractor, Supplier or Manufacturer of responsibility for error or omissions in the submission or the responsibility of meeting all requirements of the contract documents. Any deviation from the contract documents initiated by the Sub-Contractor, Supplier or Manufacturer shall be at their sole risk. QUANTITIES AND DETAIL DIMENSIONS ARE THE SUB-CONTRACTORS OR SUPPLIERS RESPONSIBILITY. VERIFY DATA WITH FIELD DIMENSIONS.

SUBMITTAL TRACKING No.: **CIVIL-006**

2018-08-21


PHASE 1A - FROM WASTE WATER TO AKILIQ
N
Akiliq
Concrete jersey
Cone line
Access Vault
Excavation trench


PHASE 1B -
SOUTH BOUND
OF AKILIQ DRIVE
N
Akiliq
SPEED LIMIT 30
SPEED LIMIT 30
STOP LINE
STOP LINE
ROAD CLOSED
Concrete jersey
Cone line
Access Vault
Excavation trench
Lane deviation
Traffic light with timer

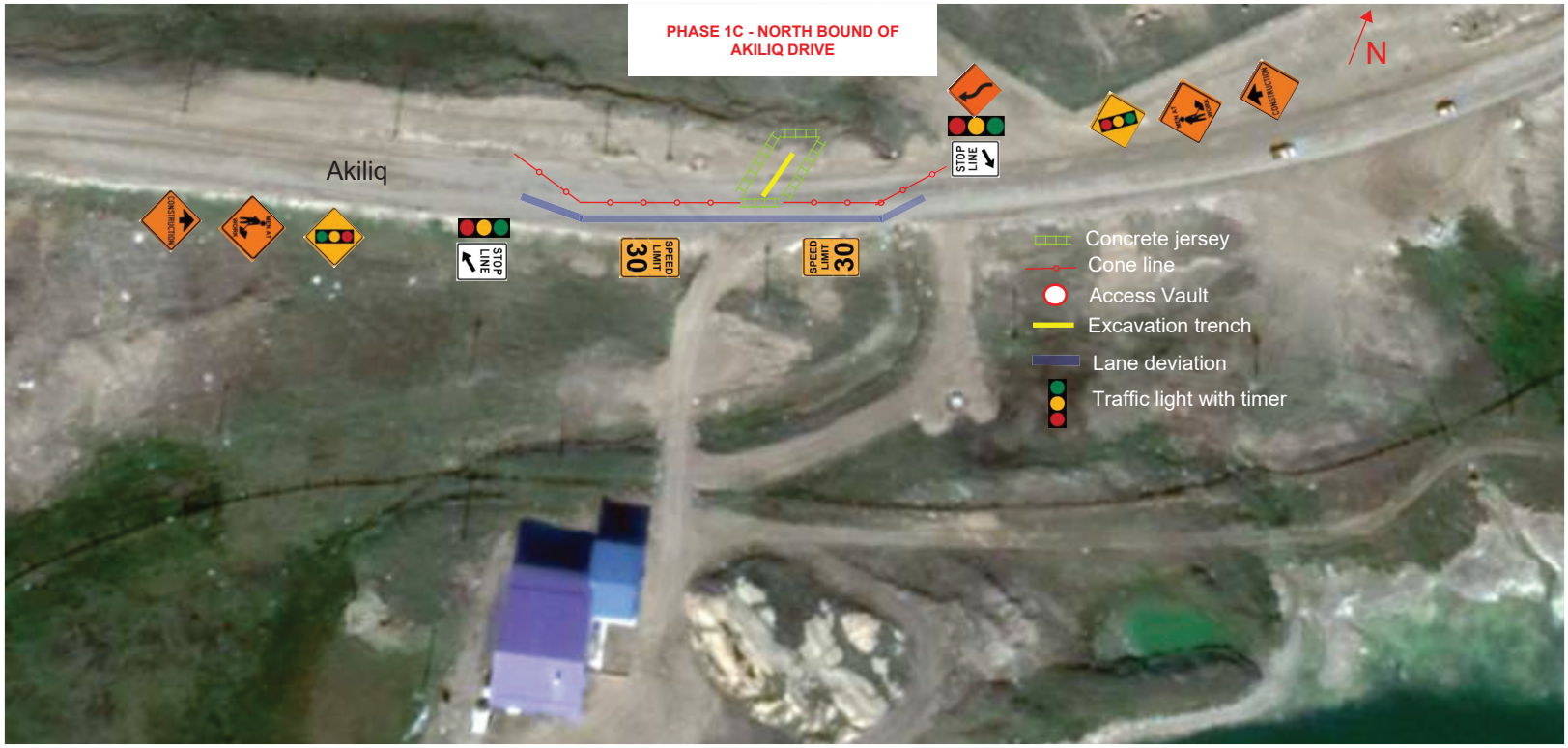
PHASE 1C - NORTH BOUND OF AKILIQ DRIVE
Akiliq
STOP LINE
SPEED LIMIT 30
SPEED LIMIT 30
STOP LINE
N
Concrete jersey
Cone line
Access Vault
Excavation trench
Lane deviation
Traffic light with timer


PHASE 2 - FROM AV213-E TO AV213-D
N
AV213-E
CH: 0+577
AV213-D
CH: 0+466
Akiliq
Akiliq
STOP LINE
STOP LINE
SPEED LIMIT 30
SPEED LIMIT 30
Concrete jersey
Cone line
Access Vault
Excavation trench
Lane deviation
Traffic light with timer


PHASE 3 - FROM AV213-D TO AV213-C
N
Concrete jersey
Cone line
Access Vault
Excavation trench
Lane deviation
Traffic light with timer
AV213-C
CH: 0+346
AV213-D
CH: 0+466
Ikaluktuutiak Dr.
Akiliq
SPEED LIMIT 30
SPEED LIMIT 30
STOP LINE
STOP LINE
CONSTRUCTION
© 2018 Google
Image © 2018 DigitalGlobe
Google Earth


PHASE 4 - FROM AV213-C TO AV213-B
N
AV213-B
CH: 0+225
AV213-C
CH: 0+346
FLAGMEN TO DIRECT TRAFFIC LEAVING ALLANGUA STREET
STOP
Ikaluktuutiak Dr
Allanngua
Akiliq
34
30
Concrete jersey
Cone line
Access Vault
Excavation trench
Lane deviation
Traffic light with timer
© 2018 Google
Image © 2018 DigitalGlobe
Google Earth

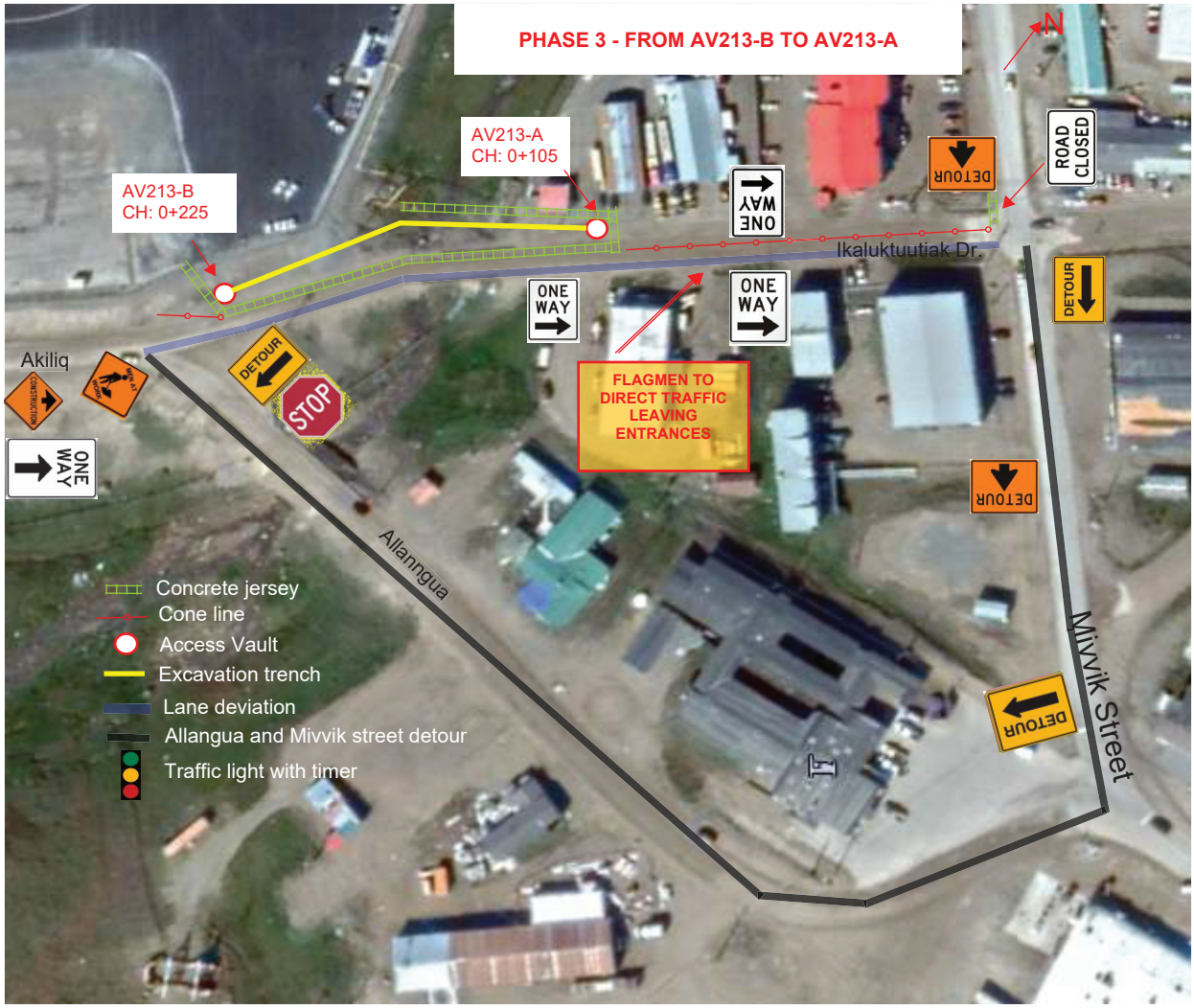
PHASE 3 - FROM AV213-B TO AV213-A
N
AV213-A
CH: 0+105
AV213-B
CH: 0+225
Ikaluktuutiak Dr.
ROAD CLOSED
DETOUR
ONE WAY
ONE WAY
ONE WAY
DETOUR
DETOUR
Akiliq
DETOUR
STOP
ONE WAY
FLAGMEN TO DIRECT TRAFFIC LEAVING ENTRANCES
DETOUR
Allanngua
Mivvik Street
Concrete jersey
Cone line
Access Vault
Excavation trench
Lane deviation
Allangua and Mivvik street detour
Traffic light with timer


PHASE 6A - FROM 213A TO MIVVIK STREET
N
ROAD CLOSED
DETOUR
ONE WAY
Ikaluktuutiak Dr.
ONE WAY
ONE WAY
DETOUR
Akiliq
DETOUR
STOP
FLAGMEN TO DIRECT TRAFFIC LEAVING ENTRANCES
Allanngua
Mivvik Street
ONE WAY
DETOUR
DETOUR
DETOUR
Concrete jersey
Cone line
Access Vault
Excavation trench
Lane deviation
Allangua and Mivvik streets detour
Traffic light with timer


PHASE 6B- AROUND AV213
N
Concrete jersey
Cone line
Access Vault
Excavation trench
Lane deviation
Detour around Akiliq drive
Traffic light with timer
AV213
CH: 0+000
Akiliq
Allanngua
ROAD CLOSED
LOCAL TRAFFIC ONLY
DETOUR
STOP LINE
CONSTRUCTION
MEN AT WORK


PHASE 6C- MIVVIK STREET CROSSING
N
Concrete jersey
Cone line
Access Vault
Excavation trench
Lane deviation
Detour around Akiliq drive
Traffic light with timer
AV213
CH: 0+000
Akiliq
Allanngua
Mivvik Street
ROAD CLOSED
LOCAL TRAFFIC ONLY
DETOUR
STOP LINE
CONSTRUCTION
MEN AT WORK

APPENDIX C

MAINTENANCE SCHEDULE

This section is not applicable for structural and architectural.

APPENDIX D

EQUIPMENT MAINTENANCE AND OPERATION MANUALS

This section is not applicable for structural and architectural.

APPENDIX E

SPARE PART LIST

EXTRA MATERIALS LIST

Description	Spec section	Initiales Kudlik	Initiales Client
Sectional Metal Doors: - Door rollers 4 sets	08 36 13	OK	OK
Sectional Metal Doors: - weatherstripping (1 set per door width)	08 36 13	OK	OK
Sectional Metal Doors: - Springs and cables (1 complete set per door width)	08 36 13	OK	OK
2 squere meter resilient flooring material of each color	09 65 16	OK	OK
1 four litter paint PT1	09 91 00	OK	OK
1 four litter paint PT2	09 91 00	OK	OK
Special tool for washroom accessories	10 28 13	OK	OK

Submitted by: [signature] Eric Munger
Signature Block letters Date

Received by: Pat Wolfe [signature] Dec 10/2019
Signature Block letters Date

APPENDIX F

CONTACT SERVICE INFORMATION

This section is not applicable for structural and architectural.

GENERAL CONTRACTOR & PROFESSIONALS

General Contractor	**Kudlik Construction Ltd** 1519 Federal Road, P.O. Box 727 Iqaluit, Nunavut, X0A 0H0 Contact : General Manager: René Déziel, P.Eng. | 866.781.0704 ext. 211 Project Manager : Sandra Rousseau, P.Eng. | 866.781.0704 ext. 257
Engineer	**Nunami Stantec** 1088C Noble House Iqaluit Nu Contact : Project Manager : Glenn Prosko P.Eng. | 780.969.3258 Site administrator: Matt Follet P.Eng. | 867.979.0555 Process Lead : Alejandro Rojas | 409.716.8012 Programming Lead: Andre Santerre | 780.917.8551

SUBCONTRACTORS/ SUPPLIERS LIST

Piles	**Canadrill Ltd** 1500 Federal Road Iqaluit, Nunavut, X0A 0H0 Contact: Cody Dean | 867.979.6031
Steel Structure	**Structures M.H. inc.** 1670 Av. de la Technologie Alma, Québec, G8C 1E0 Contact : Moise Harvey | 418-480-2186
Mechanical	**Mécanique Nordique inc.** 1255 Rue J.A Bombardier Lévis, Québec G7A 2P4 Contact: Jean-Robert Girard | 418.496.1109
Mechanical Process	**Norclair inc.** 1100, Montée Masson Laval, Qc H7E 4P2 Contact : Dominic Papineau | 450.688.4012 **Veolia Water Technologies** 4105 Sartelon St-Laurent, Qc H4S 2B3 Contact : Clément Bekaert | 514-334-7230 **Enviro-Care** 1570 St-Paul ave Gurnee, IL 60031 Contact : Urban G.Jones | 224.302.0310 **Trojan Technologies** 3020 Gore Road, London, Canada N5V 4T7 Contact: Darren Preete | 519.457.2701

Floor	**Tapico Québec inc.** 3260 rue Watt, suite 105 Québec City, Québec, G1X 4T5 Contact : Maryse Arbour | 418.659.4400
Exterior wall and roof assemblies	**Concentric Engineering & Consulting** 700 Richmond Street, Suite 307 London, Ontario, N6A 5C7 Contact : Adam Palmer | 866.919.4531
Metals	**Structures M.H. inc.** 1670 Av. de la Technologie Alma, Québec, G8C 1E0 Contact : Moise Harvey | 418-480-2186
Membrane	**Soprema** 1688 rue J.B.Michaud Drummondville, Québec, J2C 8E9 Contact: Jean-François Tremblay | 418.681.8788
Door & Frame Hardware (Steel)	**Quincaillerie Architecturale Centre du Québec** 195 rue Saint-Denis Drummondville, Québec, J2B 5T7 Contact : Marc-André Bourget | 819.474.1010
Metal Claddings	**Moulures 2000 inc.** 103 rue du Parc Saint-Patrick-de-Beaurivage, Québec, G0S 1B0 Contact: Benoit Prévost | 418.596.2606
Architectural Woodwork	**Ébénisterie Lac-St-Jean** 575, avenue Château St-Bruno, Qc G0W 2L0 Contact: Jessica Bouchard| 418.343.3487

APPENDIX G

WARRANTIES

WARRANTY LETTER

City of Iqaluit
Department of Engineering & Sustainability
P.O. BOX 460
Iqaluit, Nunavut X0A 0H0

Date: 2020 February

PROJECT: Wastewater Treatment Plant Upgrade, Iqaluit, Nu.

SUBJECT: General Warranty for the project

With the following, we are pleased to confirm that Kudlik Construction Ltd will warranty the material & installation as per specifications and drawings on this project for a period of one (1) year from the date of substantial completion.

Owner will notify Kudlik by writing of any deficiencies during this period and allow us a reasonable delay for corrections.

No responsibilities will be assumed for deficiencies or damages resulting of special events such as blast of winds, hurricanes, tornados, hail storms, lightning, etc., or vandalism.

The warranty shall be void if the owner fails to maintain the product as per manufacturer's instructions and specifications and/or makes modifications to the product. Kudlik will not be held responsible for any and all deficiencies resulting from such circumstances.

This warranty cannot be transferred or negotiated.

Sandra Rousseau, Project Manager
Kudlik Construction Ltd.

WARRANTY LETTER

Section 07 21 13 – Board Insulation

Warranty letters will be provided by Dow - Rockwool (materials)
and Kudlik Construction Ltd (installation)

Limited Thermal Warranty

Issued: 2013
Re: LIMITED 30 YEAR THERMAL WARRANTY

What is Covered

ROCKWOOL warrants to the owner of a building in Canada or the US in which the warranted ROCKWOOL products are installed, for thirty (30) Years after installation, that its listed products, when used in the building and handled and serviced only in accordance with ROCKWOOL instructions ("intended use"), will maintain the originally declared R Value as published on the product packaging and specification data sheets existing on the date of sale by ROCKWOOL. Products must have been installed within six months after date of sale to be covered by this warranty.

If the ROCKWOOL products do not conform to this warranty, ROCKWOOL will, at its own election, redeliver the product with like quantities delivered to the original point of delivery, repair the product if removed by the claimant, or refund the original purchase price of the product.

"The Owner" is defined as the owner of a building or structure incorporating the ROCKWOOL products at the time the warranty claim accrues. A "listed product" is a ROCKWOOL product whose product packaging or specification data sheet states that the product is covered by the Limited 30-Year Thermal Warranty issued by ROCKWOOL.

What is Not Covered

The Warranty does not cover any damage or change to ROCKWOOL products resulting from improper material handling or storage, water, fire, wind, accident, disaster, non-intended use, improper installation, abuse, failure of other system components or modification. See additional Exclusions and Limitations, below.

Claims Process

The owner, within 90 days after it or its representatives knew or should have known information suggesting a possible warranty claim, shall provide written notice to ROCKWOOL, at the appropriate address below, including a full statement of the owner's identity, building location, product description and all other relevant information. With the written notice, the Owner must provide documentary evidence as to date of sale and installation including, for example, sales receipts. Failure to initiate the claim in this manner and within this timeframe voids this warranty.

Sampling and Testing

All sampling and testing of ROCKWOOL products subject to a claim under this warranty must be conducted in accordance with the prescribed methods from ROCKWOOL and in the presence of a ROCKWOOL representative, with 30 days written advance notice to ROCKWOOL of the time of testing. All sampling and testing costs incurred by claimant in connection with a claim under this warranty are the sole responsibility of the claimant. ROCKWOOL shall be entitled to split samples at its own expense.

EXCLUSIONS and LIMITATIONS

TO THE FULLEST EXTENT PERMITTED BY APPLICABLE LAW, ROCKWOOL EXPRESSLY DISCLAIMS ALL OTHER WARRANTIES, WHETHER EXPRESS OR IMPLIED, INCLUDING WARRANTIES OF MERCHANTABILITY, FITNESS FOR A PARTICULAR PURPOSE, AND NON-INFRINGEMENT, AND ANY OTHER WARRANTIES ARISING BY LAW, OTHER AGREEMENT, USAGE OF TRADE, OR COURSE OF DEALING, EVEN IF ROCKWOOL HAS KNOWLEDGE OF HOW THE PRODUCT IS TO BE USED.

ROCKWOOL SHALL NOT BE LIABLE TO THE OWNER FOR ANY INCIDENTAL DAMAGES INCLUDING, WITHOUT LIMITATION, FOR INSPECTION, RECEIPT, TRANSPORTATION AND CARE AND CUSTODY OF GOODS RIGHTLY REJECTED.

ROCKWOOL SHALL NOT BE LIABLE TO THE OWNER FOR ANY CONSEQUENTIAL DAMAGES INCLUDING, WITHOUT LIMITATION, LOST REVENUES OR PROFITS, LOSS IN REAL ESTATE OR OTHER PROPERTY VALUE, ARCHITECT OR ENGINEER FEES, CONTRACTOR OR LABOR COSTS TO REMOVE AND/OR REPLACE THE PRODUCTS, AND LOSSES OR COSTS FROM EXTRA HEATING OR COOLING REQUIREMENTS.

ROCKWOOL SHALL NOT BE LIABLE TO ANYONE BESIDES THE OWNER, AS DEFINED HEREIN, FOR ANY OTHER DAMAGES OR AMOUNTS.

THE ABOVE WARRANTY IS THE EXCLUSIVE AND ONLY THERMAL WARRANTY MADE BY ROCKWOOL AND DOES NOT NEGATE THE LIMITED WARRANTY FOUND IN THE ROCKWOOL TERMS & CONDITIONS OF SALE. ROCKWOOL'S AGGREGATE LIABILITY ARISING UNDER THIS LIMITED WARRANTY SHALL NOT EXCEED THE ACTUAL PURCHASE PRICE PAID FOR THE RELEVANT ROCKWOOL PRODUCT.

ROXUL Inc. makes this warranty for Canada and may be contacted at 8024 Esquesing Line, Milton, Ontario, Canada L9T 6W3. Phone: 800-265-6878 or (905) 878-8474.

ROXUL USA Inc. makes this warranty for the US and is found at160 Greentree Drive Suite 100 City of Dover, County of Kent, Delaware 19904. Phone: 800-265-6878 or (905) 878-8474.

This Limited Warranty covers the following ROCKWOOL products: MONOBOARD® roof board insulation, TOPROCK® dual density roof board insulation and CAVITYROCK® wall cavity insulation.

To Whom It May Concern

Re: ROCKWOOL Terms and Conditions regarding Limited Warranty

ROCKWOOL warrants that products sold to Purchaser shall meet such specifications at the place of manufacture as are outlined in the most recently published ROCKWOOL data sheets. If not in conformity with such specifications, ROCKWOOL will, in its sole discretion, replace products at the original point of delivery or repair the products. To be allowed, claims must be reported within (3) days if the defect is visible and within (10) days if it is not visible. This warranty does not include service to repair damage to the product resulting from accident, disaster, misuse, abuse, or non-ROCKWOOL modification to the product. THE FOREGOING WARRANTIES ARE IN LIEU OF AND PURCHASER THEREBY WAIVES ALL OTHER WARRANTIES AND CONDITIONS, EXPRESS, IMPLIED, OR STATUTORY, INCLUDING BUT NOT LIMITED TO ANY WARRANTY OR CONDITION OF MERCHANTABLE QUALITY OR FITNESS FOR USE FOR A PARTICULAR PURPOSE. THE SAID REMEDY OR REPAIR OR REPLACEMENT IS THE SOLE REMEDY OF THE PURCHASER FOR ROCKWOOL'S BREACH OF WARRANTY AND SUCH REMEDY EXTENDS ONLY TO THE PURCHASER.

For further information or assistance, please contact:

ROCKWOOL Technical Support

1-877-823-9790

contactus@rockwool.com

STYROFOAM™ HIGHLOAD 40, 60 AND 100 Extruded Polystyrene Insulation

1. PRODUCT NAME

STYROFOAM™ HIGHLOAD Extruded Polystyrene Foam Insulation

2. MANUFACTURER

The Dow Chemical Company
Dow Building Solutions
200 Larkin
Midland, MI 48674
1-866-583-BLUE (2583)
Fax 1-989-832-1465

Dow Chemical Canada ULC
Dow Building Solutions
450 – 1st St. SW, Suite 2100
Calgary, AB T2P 5H1
1-866-583-BLUE (2583) (English)
1-800-363-6210 (French)

www.dowbuildingsolutions.com

3. PRODUCT DESCRIPTION

STYROFOAM™ HIGHLOAD Extruded Polystyrene Foam Insulation is a closed-cell foam insulation. Available in compressive strengths of 40, 60 and 100 psi (275, 415 and 690 kPa), STYROFOAM™ HIGHLOAD insulation features exceptional moisture resistance and R-value* retention. All three STYROFOAM™ HIGHLOAD insulation products resist compressive creep and fatigue, delivering long-term compressive strength. Like all STYROFOAM™ insulation products, STYROFOAM™ HIGHLOAD 40, 60 and 100 are durable, versatile and reusable – making them a preferred choice for a variety of high-load applications.

BASIC USE

STYROFOAM™ HIGHLOAD insulation is designed for use in low-temperature (freezer floor) applications, highways, airport runways, bridge abutments, parking decks, utility lines, ice rinks and plaza decks. It is the responsibility of the designer to select the proper STYROFOAM™ HIGHLOAD insulation product based on the dead and live loads expected in the application.

4. TECHNICAL DATA

APPLICABLE STANDARDS

STYROFOAM™ HIGHLOAD 40, 60 and 100 insulation meets ASTM C578 – Standard Specification for Rigid Cellular Polystyrene Thermal Insulation. Applicable ASTM standards include:

- C518 – Standard Test Method for Steady-State Thermal Transmission Properties by Means of the Heat Flow Meter Apparatus
- C177 – Standard Test Method for Steady-State Heat Flux Measurements and Thermal Transmission Properties by Means of the Guarded-Hot-Plate Apparatus
- D1621 – Standard Test Method for Compressive Properties of Rigid Cellular Plastics
- D2842 – Standard Test Method for Water Absorption of Rigid Cellular Plastics
- E96 – Standard Test Methods for Water Vapor Transmission of Materials
- C272 - Standard Test Method for Water Absorption of Core Materials for Structural Sandwich Constructions
- D696 – Standard Test Method for Coefficient of Linear Thermal Expansion of Plastics Between -30°C and 30°C With a Vitreous Silica Dilatometer
- C203 – Standard Test Methods for Breaking Load and Flexural Properties of Block-Type Thermal Insulation Cellular Plastics
- D4716 – Standard Test Method for Determining the (In-plane) Flow Rate per Unit Width and Hydraulic Transmissivity of a Geosynthetic Using a Constant Head
- CAN/ULC S701 Type 4

TABLE 1: U.S. VALUES AND TYPICAL PHYSICAL PROPERTIES OF STYROFOAM™ HIGHLOAD 40, 60 AND 100 INSULATION

PROPERTY AND TEST METHOD	HIGHLOAD 40	HIGHLOAD 60	HIGHLOAD 100
Thermal Resistance, per inch, ASTM C518, C177, @ 75°F mean temp., ft²•h•°F/Btu, R-value, min.	5.0	5.0	5.0
Compressive Strength(1), ASTM D1621, psi, min.	40	60	100
Water Absorption, ASTM C272, % by volume, max. (24hr water immersion)	0.3	0.3	0.3
Water Vapor Permeance(2), ASTM E96, perms	1.0 (57.2 ng/Pa.s.m²)	0.8 (45.8 ng/Pa.s.m²)	0.6 (34.3 ng/Pa.s.m²)
Maximum Use Temperature, °F	165	165	165
Coefficient of Linear Thermal Expansion, ASTM D696, in/in•°F	3.5×10^{-5}	3.5×10^{-5}	3.5×10^{-5}
Flexural Strength, ASTM C203, psi, min.	60	75	100
Complies with ASTM C578, Type	VI	VII	V

(1) Vertical compressive strength is measured at 5 percent deformation or at yield, whichever occurs first. Since STYROFOAM insulations are visco-elastic materials, adequate design safety factors should be used to prevent long-term creep. For static loads, 3:1 is suggested. For dynamic loads, call 1-866-583-BLUE (2583) for safety factor recommendation.
(2) Water vapor permeance varies with product type and thickness. Values are based on the desiccant method and they apply to insulation 1" or greater in thickness.

®™Trademark of The Dow Chemical Company ("Dow") or an affiliated company of Dow
* R means resistance to heat flow. The higher the R-value or RSI, the greater the insulating power.

TABLE 2: CANADA VALUES AND TYPICAL PHYSICAL PROPERTIES OF STYROFOAM™ HIGHLOAD 40, 60 AND 100 INSULATION

PROPERTY AND TEST METHOD	HIGHLOAD 40	HIGHLOAD 60	HIGHLOAD 100
Thermal Resistance, per inch (25 mm), ASTM C518, C177, @ 75°F (24°C) mean temp., ft²•h•°F/Btu (m²•°C/W), R-value (RSI), min.	5.0 (.88)	5.0 (.88)	5.0 (.88)
Compressive Strength(1), ASTM D1621, psi (kPa), min.	40 (275)	60 (415)	100 (690)
Water Absorption, ASTM D2842, % by volume, max. (96hr water immersion)	0.7	0.7	0.7
Water Vapour Permeance(2), ASTM E96, perms (ng/Pa•s•m²)	1.0 (57.2 ng/ Pa.s.m²)	0.8 (45.8 ng/ Pa.s.m²)	0.6 (34.3 ng/ Pa.s.m²)
Maximum Use Temperature, °F (°C)	165 (74)	165 (74)	165 (74)
Coefficient of Linear Thermal Expansion, ASTM D696, in/in•°F (mm/m•°C)	3.5 x 10^{-5} (6.3 x 10^{-2})	3.5 x 10^{-5} (6.3 x 10^{-2})	3.5 x 10^{-5} (6.3 x 10^{-2})
Flexural Strength, ASTM C203, psi (kPa), min.	70 (480)	85 (585)	85 (585)
Compressive Modulus (typical), ASTM D1621, psi (kPa)	1,400 (9,650)	2,200 (15,170)	3,700 (25,510)
Complies with CAN/ULC S701, Type	4	4	4

(1) Vertical compressive strength is measured at 5 percent deformation or at yield, whichever occurs first. Since STYROFOAM insulations are visco-elastic materials, adequate design safety factors should be used to prevent long-term creep. For static loads, 3:1 is suggested. For dynamic loads, call 1-866-583-BLUE (2583) for safety factor recommendation.
(2) Water vapour permeance varies with product type and thickness. Values are based on the desiccant method and they apply to insulation 1" (25 mm) or greater in thickness.

CODE COMPLIANCES

STYROFOAM™ HIGHLOAD 40, 60 and 100 insulation complies with the following codes:

- International Residential Code (IRC) and International Building Code (IBC); see ICC-ES ESR 2142 (excluding STYROFOAM™ HIGHLOAD 100)
- California Std. Reg. #CA T-064
- Underwriters Laboratories, see Classification Certificate D369
- Underwriters Laboratories Verified to ESR 2142

Contact your Dow sales representative or local authorities for state/provincial and local building code requirements and related acceptances.

TYPICAL PHYSICAL PROPERTIES

STYROFOAM™ HIGHLOAD 40, 60 and 100 insulation products exhibit the typical physical properties indicated in Tables 1 and 2 when tested as represented.

ENVIRONMENTAL DATA

STYROFOAM™ HIGHLOAD 40, 60 and 100 insulation is manufactured with proprietary blowing agent potential with zero percent ozone depletion potential.

STYROFOAM™ Extruded Polystyrene Foam Insulation products are reusable in many applications.

®™Trademark of The Dow Chemical Company ("Dow") or an affiliated company of Dow

FIRE PROTECTION
STYROFOAM™ HIGHLOAD 40, 60 and 100 insulation is combustible; protect from high heat sources. Local building codes may require a protective or thermal barrier. For more information, consult MSDS, call Dow at 1-866-583-BLUE (2583) or contact your local building inspector.

5. INSTALLATION

STYROFOAM™ HIGHLOAD 40, 60 and 100 insulation boards are easy to handle and install. They can be cut with a utility knife or any sharp blade. Contact a local Dow representative or access the literature library at www.dowbuildingsolutions.com for more specific instructions.

6. AVAILABILITY

STYROFOAM™ HIGHLOAD 40, 60 and 100 insulation products are distributed through an extensive network. For more information, call:
1-800-232-2436 (English)
1-800-565-1255 (French)

7. WARRANTY

In the United States, a 15-year limited thermal warranty is available. Warranties are available as described at http://building.dow.com/na/en/tools/warranty.htm

8. MAINTENANCE

Not applicable.

9. TECHNICAL SERVICES

Dow can provide technical information to help address questions when using STYROFOAM™ HIGHLOAD 40, 60 and 100 insulation products. Technical personnel are available to assist with any insulation project. For technical assistance call:
1-866-583-BLUE (2583) (English)
1-800-363-6210 (French)

10. FILING SYSTEMS

- www.dowbuildingsolutions.com
- www.sweets.com

®™Trademark of The Dow Chemical Company ("Dow") or an affiliated company of Dow

www.dowbuildingsolutions.com

Technical Information
1-866-583-BLUE (2583) (English)
1-800-363-6210 (French)

Sales Information
1-800-232-2436 (English)
1-800-565-1255 (French)

IN THE U.S.
THE DOW CHEMICAL COMPANY
200 Larkin
Midland, MI 48674

IN CANADA
DOW CHEMICAL CANADA ULC
450 – 1st St. SW . Suite 2100
Calgary, AB T2P 5H1

NOTICE: No freedom from any patent owned by Dow or others is to be inferred. Because use conditions and applicable laws may differ from one location to another and may change with time, Customer is responsible for determining whether products and the information in this document are appropriate for Customer's use and for ensuring that Customer's workplace and disposal practices are in compliance with applicable laws and other government enactments. The product shown in this literature may not be available for sale and/or available in all geographies where Dow is represented. The claims made may not have been approved for use in all countries or regions. Dow assumes no obligation or liability for the information in this document. References to "Dow" or the "Company" mean the Dow legal entity selling the products to Customer unless otherwise expressly noted. NO EXPRESS WARRANTIES ARE GIVEN EXCEPT FOR ANY APPLICABLE WRITTEN WARRANTIES SPECIFICALLY PROVIDED BY DOW. ALL IMPLIED WARRANTIES INCLUDING THOSE OF MERCHANTABILITY AND FITNESS FOR A PARTICULAR PURPOSE ARE EXPRESSLY EXCLUDED.

COMBUSTIBLE: Protect from high heat sources. Local building codes may require a protective or thermal barrier. For more information, consult MSDS, call Dow at 1-866-583-BLUE (2583) or contact your local building inspector. In an emergency, call 1-989-636-4400 in the U.S. or 1-519-339-3711 in Canada.

Building and/or construction practices unrelated to building materials could greatly affect moisture and the potential for mold formation. No material supplier including Dow can give assurance that mold will not develop in any specific system.

ENERGY STAR PARTNER

Printed in U.S.A.

®™Trademark of The Dow Chemical Company ("Dow") or an affiliated company of Dow

Form No. 179-02548X-1210MCK
178-00202X-1210MCK
MCKAY207222

WARRANTY LETTER

07 21 13 – Board Insulation

City of Iqaluit
Department of Engineering & Sustainability
P.O. BOX 460
Iqaluit, Nunavut X0A 0H0

Date: 2020 February

PROJECT: Wastewater Treatment Plant Upgrade, Iqaluit, Nu.

SUBJECT: Warranty for item 07 21 13 – Board Insulation

With the following, we are pleased to confirm that Kudlik Construction Ltd will warranty the installation of the materials provided by DOW and Rockwool, as per specifications and drawings on this project, during one (1) years from the date of substantial completion.

Owner will notify Kudlik by writing of any deficiencies during this period and allow us a reasonable delay for corrections.

No responsibilities will be assumed for deficiencies or damages resulting of special events such as blast of winds, hurricanes, tornados, hail storms, lightning, etc., or vandalism.

The warranty shall be void if the owner fails to maintain the product as per manufacturer's instructions and specifications and/or makes modifications to the product. Kudlik will not be held responsible for any and all deficiencies resulting from such circumstances.

This warranty cannot be transferred or negotiated.

Sandra Rousseau, Project Manager
Kudlik Construction Ltd.

WARRANTY LETTER

07 22 00 – Semi Rigid Roof Insulation

City of Iqaluit
Department of Engineering & Sustainability
P.O. BOX 460
Iqaluit, Nunavut X0A 0H0

Date: 2020 February

PROJECT: Wastewater Treatment Plant Upgrade, Iqaluit, Nu.

SUBJECT: Warranty for item 07 22 00 – Semi Rigid Roof Insulation

With the following, we are pleased to confirm that Kudlik Construction Ltd will warranty the installation of the materials provided by Toiture Gilles Veuilleux, as per specifications and drawings on this project, during one (1) years from the date of substantial completion..

Owner will notify Kudlik by writing of any deficiencies during this period and allow us a reasonable delay for corrections.

No responsibilities will be assumed for deficiencies or damages resulting of special events such as blast of winds, hurricanes, tornados, hail storms, lightning, etc., or vandalism.

The warranty shall be void if the owner fails to maintain the product as per manufacturer's instructions and specifications and/or makes modifications to the product. Kudlik will not be held responsible for any and all deficiencies resulting from such circumstances.

This warranty cannot be transferred or negotiated.

Sandra Rousseau, Project Manager
Kudlik Construction Ltd.

WARRANTY LETTER

Section 07 27 10 – Air Vapour Barrier

A warranty letter will be provided by Soprema Inc. and Blue skin

3 years for installation by Kudlik construction

WARRANTY LETTER

07 27 10 – Air Vapour Barrier

City of Iqaluit
Department of Engineering & Sustainability
P.O. BOX 460
Iqaluit, Nunavut X0A 0H0

Date: 2020 February

PROJECT: Wastewater Treatment Plant Upgrade, Iqaluit, Nu.

SUBJECT: Warranty for item 07 27 10 – Air Vapour Barrier

With the following, we are pleased to confirm that Kudlik Construction Ltd will warranty the installation of the materials provided by Soprema and Blue skin, as per specifications and drawings on this project, during three (3) years from the date of substantial completion.

Owner will notify Kudlik by writing of any deficiencies during this period and allow us a reasonable delay for corrections.

No responsibilities will be assumed for deficiencies or damages resulting of special events such as blast of winds, hurricanes, tornados, hail storms, lightning, etc., or vandalism.

The warranty shall be void if the owner fails to maintain the product as per manufacturer's instructions and specifications and/or makes modifications to the product. Kudlik will not be held responsible for any and all deficiencies resulting from such circumstances.

This warranty cannot be transferred or negotiated.

Sandra Rousseau, Project Manager
Kudlik Construction Ltd.

WARRANTY LETTER

Section 07 46 13 – Preformed Metal Siding

A warranty letter will be provided by Moulure 2000 (vicwest).

2-year warranty for the material

WARRANTY LETTER

Section 07 46 19 – Steel Roofing

A warranty letter will be provided by Moulure 2000 (vicwest). (material)

Vicwest Products
Limited Warranty

RBQ License: 8256-5821-32

WARRANTY RECIPIENT:	Pilitak Enterprises LTD	**TOGETHER WITH:**	MOULURES 2000 INC.
ADDRESS, CITY, POSTAL CODE:	1519, Federal Road Iqaluit, Nunavut, X0A 0H0	ADDRESS, CITY, POSTAL CODE:	103, RUE DU PARC ST-PATRICE-DE-BEAURIVAGE Quebec G0S 1B0
PHONE:	866-781-0704	PHONE:	418-596-2606

PROJECT NAME: Iqaluit Wastewater Treatment Plant Upgrade / Project #1QA15-4964-C

PROJECT ADDRESS: N/A

PRODUCTS AND COLOURS USED:

TRADITION 100-4, GAUGE 22, WHITE WHITE #56076 WXL FINISH	CORRUGUE 7/8, GAUGE 24, GOLD #56070 WXL FINISH
CORRUGUE 7/8, GAUGE 22, ROYAL BLUE #56081 WXL FINISH	CORRUGUE 7/8, GAUGE 24, ORANGE #56063 WXL FINISH
CORRUGUE 7/8, GAUGE 22, GALVALUME PLUS AZ180 NU FINISH	MURALIC, CALIBRE 26, WHITE WHITE #56076 WXL FINISH
CORRUGUE 7/8, GAUGE 26, BRIGHT RED #56080 WXL FINISH	

PERIOD COVERED: 2 **YEAR(S) FROM** Substantial date

Vicwest Building Products, a division of Vicwest Inc. (hereinafter called "Vicwest") located at 707 Pierre-Roux Est Boulevard, Victoriaville, QC G6T 1S7, hereby warrants to the above-stated warranty recipient that the metal cladding materials manufactured and supplied and used as the aforementioned building materials are guaranteed according to their specifications and are free from manufacturing defects, but in the event that such defects exist and appear during the period specified in the section, then the warranty – subject to the following conditions and limitations – will come into effect:

1. In case the materials provided by ***Vicwest*** have manufacturing defects insofar that the materials supplied by ***Vicwest*** cannot be used for the use normally intended and provided that such materials have been installed and incorporated as per the specifications and shop drawings prepared by ***Vicwest*** and approved by the general contractor, *and contractors if applicable*, ***Vicwest*** undertakes to provide, free of charge, ***Vicwest*** replacement materials only for the duration of the said material warranty. Under this warranty, in no event shall ***Vicwest*** be liable for any direct, indirect, incidental or consequential damages other than damages to the metal product. ***Vicwest*** cannot be held liable, especially but not limited to, for the loss of use of the building or of any of its equipment and/or contents, lost profits, the building owner's cost of production shutdowns and/or any other damages of any nature caused to the owner of the building, its users and/or customers.

2. In the event that the materials covered by this warranty are no longer manufactured or available through ***Vicwest***, ***Vicwest*** reserves the right to provide similar materials it manufactures that can be adapted to the rework.

3. The current warranty is only issued upon receipt of full payment for the delivered materials.

4. Subject to this warranty's other provisions and without limiting its scope, ***Vicwest*** will not be held liable for damages resulting from any of the following:
   a) faulty, unacceptable or improper installation and/or non-compliance with ***Vicwest*** installation requirements;
   b) neglect to remove the filings from the installation of fasteners regardless of the installation method used;
   c) abusive or abnormal use of the product, such as the use of abrasives, the result of air pollution, or objects left on products;
   d) faulty design or faulty building construction;
   e) mechanical systems malfunction leading to the deformation of the air/vapour barrier;
   f) modifications, alterations, additions or repairs made to the product after the completion date mentioned above and without ***Vicwest's*** previous agreement in writing;
   g) other products dropped on the material regardless of their provenance, or collision/impact with an object (e.g., snow removal tools);
   h) any uncontrollable event or event caused by the customer;
   i) relocation or deterioration of a material adjacent to the product or incorporated into the product, as well as materials used as direct or indirect support for the product, as well as building structure defects or abnormal behaviour;
   j) Poor maintenance of the product and lack of reasonable care for it.

5. The potential warranty recipient must inform ***Vicwest*** in writing within five (5) business days after the finding of a defect that could bring this warranty into effect by sending a letter to the aforementioned location address. Said warranty recipient will make no repairs before the product is inspected and a repair solution is developed by ***Vicwest***.

6. For the term of this warranty, agents or employees of ***Vicwest*** shall have free and unlimited access to inspect the building during regular business hours.

7. This warranty is transferable to subsequent purchasers of the building, but only if a written notice is sent to ***Vicwest*** at the above-mentioned address within five (5) days of said building ownership transfer. If such notice is not sent, the warranty will be terminated.

8. In case of a dispute regarding the interpretation or application of this warranty, the relevant court is that of the province where the property is located and in the judicial district of this province where ***Vicwest*** has the nearest place of business. Should ***Vicwest*** have no place of business in that province, the recourse must be filed in the judicial district where the property is located.

9. The agents, suppliers, representative and employees of ***Vicwest*** are not allowed to make any changes to this warranty. All statements and/or additional warranties hereby, whether oral or written, cannot in any way engage ***Vicwest*** beyond the terms of this warranty.

10. This warranty replaces and excludes any other warranty or obligation, express or implied, resulting from legal decisions or not. Failure to comply with any conditions or requirements referred to in this warranty will make it void and inapplicable. If the invalidity of any of these clauses is subsequently pronounced by a relevant court, the remainder of the warranty remains in effect.

11. The recipient is deemed to have understood the nature and extent of each of the clauses of this warranty if they do not request explanations in writing from ***Vicwest*** within ten (10) days from the date it is issued.

INVOICE(S) NUMBER(S) : #90948111, #90947825, #90971343, #90950893

August 17, 2018

Date

Philippe Caissy
Sales Manager, Quebec and Northern United States

Vicwest Building Products, a division of Vicwest Inc.

WARRANTY LETTER

Section 08 11 00 – Metal Doors and Frames

A warranty letter will be provided by Quincaillerie Architecturale Centre du Québec Inc.

1-year warranty from substantial completion

Installation 1-year by Kudlik Construction

QUINCAILLERIE ARCHITECTURALE CENTRE DU QUÉBEC INC.

Drummondville, August 28, 2018

City of Iqaluit
P.O. Box 460
Iqaluit, Nunavut
X0A 0H0

SUBJET: CERTIFICATE OF WARRANTY
FOR THE FOLLOWING BUILDING

PROJECT: **CITY OF IQALUIT WWTP**
IQALUIT, NUNAVUT

The following represents QACQ's warranty for provided items: steel frames (1) year, steel doors (1) year and finishing hardware (1) year. This warranty is in effect as of the date mentioned in the certificate of completion provided by the architect and owner. The owner must inform QACQ inc. immediately, in writing, of any defectiveness. The owner must also give a reasonable time frame to execute the repairs. These repairs will be done within normal working hours.

Note that all periods of allocated warranties are established according to standard warranty norms given by manufacturers.

Q.A.C.Q Inc.'s responsibility is limited to its products only. Warranty does not include installation or any modification done on the products after delivery.

QUINCAILLERIE ARCHITECTURALE
CENTRE DU QUEBEC INC.

Jean Chapdelaine,
President

195, rue Saint-Denis, Drummondville (Québec) J2B 5T7 • Tél.: (819) **474-1010** Fax: (819) **474-8084**

WARRANTY LETTER

08 11 00 – Metal Doors and Frames

City of Iqaluit
Department of Engineering & Sustainability
P.O. BOX 460
Iqaluit, Nunavut X0A 0H0

Date: 2020 February

PROJECT: Wastewater Treatment Plant Upgrade, Iqaluit, Nu.

SUBJECT: Warranty for item 08 11 00 – Metal Doors and Frames

With the following, we are pleased to confirm that Kudlik Construction Ltd will warranty the installation of the materials provided by QACQ, as per specifications and drawings on this project, during One (1) years from the date of substantial completion.

Owner will notify Kudlik by writing of any deficiencies during this period and allow us a reasonable delay for corrections.

No responsibilities will be assumed for deficiencies or damages resulting of special events such as blast of winds, hurricanes, tornados, hail storms, lightning, etc., or vandalism.

The warranty shall be void if the owner fails to maintain the product as per manufacturer's instructions and specifications and/or makes modifications to the product. Kudlik will not be held responsible for any and all deficiencies resulting from such circumstances.

This warranty cannot be transferred or negotiated.

Sandra Rousseau, Project Manager
Kudlik Construction Ltd.

WARRANTY LETTER

Section 08 54 13 – Fiberglass Windows

A warranty letter will be provided by Cascadia.

20 years for fiberglass frame components (material)
10 years for integral hardware (material)
20 years for insulated glass units to cover premature hermetic seal failure (condensation between the lites at normal service temperatures) (material)

20 years for installation by Kudlik construction

WARRANTY LETTER

Section 08 80 50 – Glazing

A warranty letter will be provided by Cascadia windows

CASCADIA WINDOWS LTD.
TEL 604 857 4600
FAX 604 857 4606

27050 GLOUCESTER WAY
LANGLEY, BC CANADA V4W 3Y5

INFO@CASCADIAWINDOWS.COM
WWW.CASCADIAWINDOWS.COM

CASCADIA WINDOWS LTD.
LIMITED EXPRESS WARRANTIES & LIMITATIONS

Cascadia Windows Ltd. ("Cascadia"), with respect to the sale, supply, use and installation (when installed by Cascadia), of its fiberglass window and door products (the "products") and subject to the exclusions and limitations herein, provides to the original purchaser of the products the following limited express warranty (the "Warranty"):

FIBERGLASS FRAMES: Cascadia warrants, for a period of twenty (20) years, commencing from the date of delivery of the products to the original purchaser, that its fiberglass window and door frame components are free from defects in materials and workmanship. Fiberglass has material properties relative to strength, flexibility, durability, and thermal resistance that make it ideal for window and door frame applications. It is possible, however, for fiberglass to exhibit micro fissures at penetrations or concentrated stress locations. Cascadia's products are designed, manufactured, and tested with this potential in mind. Such minor fissures are a function of the material properties of fiberglass, do not compromise product performance, structural integrity, or durability, are not a product defect and therefore are not covered by this Warranty. Cascadia reserves the right to determine if stress induced micro fissures are material in nature. Cascadia's obligations under this section of this Warranty are limited to the repair or replacement of fiberglass frames, at its sole discretion.

HARDWARE: Cascadia warrants, for a period of ten (10) years, commencing from the date of delivery of the products to the original purchaser, that its operating hardware supplied integrally with the products is free from defects in materials and workmanship. Cascadia's obligations under this section of this Warranty are limited to the supply only of replacement hardware components, FOB Cascadia's plant. Labor costs to replace defective hardware components are not covered under this Warranty.

INSULATING GLASS UNITS - Annealed and Tempered Glass: The sealed insulating glass units (IGUs), consisting of annealed and/or tempered glass, which are contained in Cascadia products are manufactured by a third-party glazing supplier, and are installed by Cascadia within its fiberglass frames. The IGUs shall only be covered by the manufacturer's limited warranty for a period of 10 (ten) years, commencing from the date stamp found on the spacer bar between the sheets of glass. An optional warranty, up to 20 (twenty) years, may be provided to the purchaser to the extent that it is available from the manufacturer. The warranty of the IGUs is limited to the failure of the hermetic seal, and warrants only against the formation of water and/or dust on or within the interior surfaces of the IGUs. Cascadia shall provide no warranty of the IGUs separate and apart, or in addition to, the manufacturer's warranty. The remedy provided under this section of this warranty is limited to the supply only of replacement IGUs by Cascadia, FOB Cascadia's

plant, for defective IGUs. Labor costs to replace defective IGUs are not covered under this warranty.

INSULATING GLASS UNITS - Laminated Glass and Capillary Tubes: The sealed insulating glass units (IGUs) consisting of laminated glass, and /or those IGU's that have capillary tubes, and which are incorporate into Cascadia Products, are manufactured by a third-party glazing supplier, and are installed by Cascadia within its fiberglass frames. The IGUs shall only be covered by the manufacturer's limited warranty for a period of 5 (five) years, commencing from the date stamp found on the spacer bar between the sheets of glass. The warranty of the IGUs is limited to the failure of the hermetic seal, and warrants only against the formation of water and/or dust on or within the interior surfaces of the IGUs. Cascadia shall provide no warranty of the IGUs separate and apart, or in addition to, the manufacturer's warranty. The remedy provided under this section of this warranty is limited to the supply only of replacement IGUs by Cascadia, FOB Cascadia's plant, for defective IGUs. Labor costs to replace defective IGUs are not covered under this warranty.

EXCLUSIONS: This Warranty does not cover, and excludes without limitation, the following:

1. Damage caused by others arising from improper handling, accidents, abuse, or vandalism, or any other causes beyond Cascadia's control;
2. Glass breakage or screen tears occurring after delivery of the products;
3. Malfunction or reduced performance resulting from improper building design or product installation;
4. Damage or malfunction resulting from settlement of the building containing the products;
5. Discoloration occurring after delivery of the products to the original purchaser and arising from accumulations of dirt or other substances having the capacity to stain the painted surface or fiberglass products;
6. Damage resulting from wind, hail, fire, lightning, or other acts of God, or exposure to caustic chemicals or pollutants;
7. Defects or damage resulting from any modification of the product(s) without Cascadia's written approval;
8. Condensation on the surface of any product that may occur as the result of excess humidity or moisture; and
9. Micro fissures in the fiberglass frames at penetrations or concentrated stress locations.
10. Screens are covered under a separate warranty if provided by Cascadia.

Unless otherwise specifically provided herein, Cascadia's sole liability and Purchaser's exclusive remedy with respect to this Warranty shall be, in Cascadia's sole discretion, limited to either the repair or replacement of defective products covered by the Warranty.

This Warranty is null and void if Purchaser fails to properly maintain the products, or fails to comply with Cascadia's maintenance guide and maintenance requirements, or if the Purchaser fails to maintain complete and accurate maintenance records confirming compliance with stated

maintenance requirements. Cascadia's maintenance guide and maintenance requirements are found at http://www.cascadiawindows.com/maintenance-guide.php.

NO IMPLIED WARRANTIES: The foregoing limited express warranties are the only warranties applicable to products sold and/or supplied by Cascadia, and are provided to the exclusion of any other warranties. **ALL IMPLIED WARRANTIES, INCLUDING BUT NOT LIMITED TO THOSE RELATING TO MERCHANTABILITY, QUALITY, AND FITNESS FOR A PARTICULAR PURPOSE, ARE EXCLUDED EXCEPT TO THE EXTENT THEY ARE CONSISTENT WITH CASCADIA'S LIMITED EXPRESS WARRANTIES OR ARE OTHERWISE EXPRESSLY AGREED TO BY CASCADIA. ACCORDINGLY, THERE ARE NO WARRANTIES WHICH EXTEND BEYOND THE WARRANTIES DESCRIBED HEREIN.**

LIMITATION OF CLAIMS: Except as otherwise stated in Cascadia's Terms and Conditions, Cascadia's liability for any and all claims made against it arising from the sale, supply, use and installation (when installed by Cascadia), of its products shall cease if no action is commenced prior to the expiration of the warranty periods defined above. In no event shall Cascadia be liable to purchaser for any indirect, incidental, or consequential damages of any kind whatsoever.

Project Description: _____

Project Number: _____

Purchaser: _____

Warranty Issued by: _____

Date Warranty Issued: _____

WARRANTY LETTER

08 54 13 – Fiberglass Windows

City of Iqaluit
Department of Engineering & Sustainability
P.O. BOX 460
Iqaluit, Nunavut X0A 0H0

Date: 2020 February

PROJECT: Wastewater Treatment Plant Upgrade, Iqaluit, Nu.

SUBJECT: Warranty for item 08 54 13 – Fiberglass Windows

With the following, we are pleased to confirm that Kudlik Construction Ltd will warranty the installation of the materials provided by Cascadia, as per specifications and drawings on this project, during twenty (20) years from the date of substantial completion.

Owner will notify Kudlik by writing of any deficiencies during this period and allow us a reasonable delay for corrections.

No responsibilities will be assumed for deficiencies or damages resulting of special events such as blast of winds, hurricanes, tornados, hail storms, lightning, etc., or vandalism.

The warranty shall be void if the owner fails to maintain the product as per manufacturer's instructions and specifications and/or makes modifications to the product. Kudlik will not be held responsible for any and all deficiencies resulting from such circumstances.

This warranty cannot be transferred or negotiated.

Sandra Rousseau, Project Manager
Kudlik Construction Ltd.

WARRANTY LETTER

Section 09 65 16 – Resilient Sheet Flooring

A warranty letter will be provided by Tapico Inc.

Forbo Limited Commercial Warranty
Marmoleum® with Topshield2™

A. What Does Forbo Warrant?

Forbo Flooring Canada Corp. ("Forbo") warrants to the original purchaser ("Purchaser"), or to the original End-User ("End-User") identified in the purchase agreement under which the flooring materials were purchased, if the conditions stated in Section C below are met, that:

(a) Marmoleum® with Topshield2™ and the recommended Forbo adhesive will perform in accordance with the version of Forbo's published Technical Data Sheets in effect on the date of original purchase,
(b) Marmoleum® with Topshield2™ and the recommended Forbo adhesive will be free from manufacturing defects, and
(c) Marmoleum® with Topshield2™ under normal use shall not require the application of floor finish for a period of ten (10) years from the date of original installation when maintained in accordance with the version of Forbo's published floor care guidelines in effect on the date of original purchase.

B. How Long Does the Warranty Coverage Last?

This limited warranty extends for thirty (30) years to the original Purchaser or End-User from the original purchase date from Forbo. For applications where Forbo Sustain 1195 adhesive is used and the in-situ relative humidity levels exceed 90%, the adhesive warranty shall be limited to fifteen (15) years from the original purchase date from Forbo. For applications where Forbo Sustain 1299 is used and all substrate and testing requirements as listed on the latest version of Forbo's published Technical Data Sheet in effect on the date of original purchase are documented and strictly followed, the adhesive warranty shall be limited to fifteen (15) years from the original purchase date from Forbo. If the requirements outlined for Forbo Sustain 1299 are not met, there will be no warranty on the adhesive. Forbo Sustain 1299 is not recommended for use with Marmoleum® Decibel.

C. In Order For The Warranty Coverage To Apply:

1. the substrate on which the material will be installed must be prepared in accordance with the ASTM industry recommendations and Forbo's published Installation Guide in effect on the date of original purchase,
2. the material must be installed in accordance with Forbo's published Installation Guide in effect on the date of original purchase and must be installed by a certified Forbo Installer in good standing, using the recommended Forbo adhesive, and
3. the material must be maintained and cared for in accordance with Forbo's published Care Guidelines in effect on the date of original purchase.

D. What Will Forbo Do If The Conditions For Warranty Coverage Are NOT Met?

If all conditions for warranty coverage are not met, Forbo will only warrant the material to be free of manufacturing defects for ten (10) years.

E. What Should You Do If You Believe Forbo Flooring Products Have Failed To Conform With The Warranty?

1. As soon as possible after you discover a problem, but in any case no later than thirty (30) days after you discover a problem, and before any action is taken to change the condition of the affected floors, send your warranty claim to Forbo via Federal Express, UPS, or U.S. mail, with tracking and delivery confirmation, or via email and confirming telephone call, addressed as follows:

Forbo Flooring Canada Corp.
Attn: Product Support & Education Services / WARRANTY CLAIM
18 Maplewood Drive
Hazleton, Pennsylvania 18202
technical.na@forbo.com
570-459-0771

2. The claim should include all of the following:
   (a) your name and address, and both email and telephone contact information that Forbo can use to contact you about your claim,
   (b) the location at which the floors were installed, the name of the company that sold you the flooring, the name of the installer, the date of installation, and the size of the installation,
   (c) documentation of all pre-installation test results including but not limited to in-situ relative humidity testing, calcium chloride testing, concrete surface moisture testing, pH testing, adhesive mat bond testing, and substrate porosity testing,
   (d) photographs you have taken of the conditions, if any,
   (e) the date on which you discovered the damage, and
   (f) a reasonable description of the type, extent, and location of the damage.

F. What Will Forbo Do In Response To A Warranty Claim?

1. Forbo will contact you to confirm receipt of your claim and schedule a time for its representative to inspect and document the claimed warranty defect, and to perform testing if Forbo decides that testing is necessary to determine whether the conditions in Section C have been met and whether a warranty defect has occurred. It is a condition of Forbo's duty to remedy a warranty defect that you promptly permit Forbo to carry out an inspection and perform the testing that Forbo determines is appropriate.

2. If Forbo confirms that a warranty defect has occurred, that the warranty claim was submitted within one (1) year after the original purchase date, and that the defect was not discovered or reasonably discoverable by visual inspection before the flooring was installed, Forbo will, at its option, either:
   (a) deliver to the Purchaser/End-User, free of charge, flooring material of the same kind as was originally purchased, or of a similar kind and quality to allow for replacement of the defective originally purchased flooring material, and reimburse the Purchaser/End-User for the reasonably documented costs of installing the replacement flooring material (but not the cost of removing or disposing of the defective flooring material) or
   (b) refund the original purchase price paid to Forbo for the flooring products and materials.
3. If Forbo confirms that a warranty defect has occurred, but the conditions in Section F.2 are not met, Forbo will, at its option, either:
   (a) deliver to the Purchaser/End-User, free of charge, flooring material of the same kind as was originally purchased, or of a similar kind and quality to allow for replacement of the defective originally purchased flooring material at the Purchaser's/End-User's own cost or
   (b) refund the original purchase price paid to Forbo for the flooring products and materials.

G. What Does This Warranty NOT Cover?

1. This Limited Warranty does NOT cover material which has been subjected to misuse, neglect, accident, abuse, undue or excessive wear or conditions of use other than those defined as normal. The Forbo Technical Data Sheet and Forbo Product Application Chart define normal use.
2. This Limited Warranty does NOT cover material which has not been installed, cleaned or otherwise maintained in accordance with Forbo's published guidelines in effect on the date of original purchase.
3. This Limited Warranty does NOT cover damage to flooring materials caused by anything other than the failure of the flooring product to perform in accordance with the Limited Warranty.
4. This Limited Warranty does NOT cover surface stains including those due to exposure of the flooring material to asphalt, driveway sealer, adhesives, carpet dyes, or floor care products other than those recommended by Forbo.
5. This Limited Warranty does NOT cover damage due to improper installation or floor care, undue wear and tear, burns, cuts, tears, scratches, scuffs, indentation damage caused by high heels, or damage due to rolling loads, improperly castered chairs, failure to use recommended floor protectors, extended direct exposure to sunlight, moisture, acid or alkaline substances, hydrostatic pressure damage from the subfloor, mold or mildew, installation over insufficient substrates, or differences in color between samples or photographs and the actual flooring.
6. This Limited Warranty does NOT cover claims regarding Drying Room Yellowing / Ambering of Marmoleum®. While Marmoleum® and linoleum products are maturing in the drying stoves, a yellow cast, called "drying room yellowing" or "ambering" may appear on the surface. This yellow cast is caused by the oxidation of linseed oil and is TEMPORARY. It occurs intermittently and with varying intensity. It is most noticeable on blue and grey shades of material. When the material is exposed to light, the drying room yellowing will disappear. The process may take as little as a few hours in bright sunlight or longer with artificial light. Because this is a natural occurrence in the product, there is no set time frame for the yellowing to disappear. This is not a material defect. In regards to floor care, applying spray buff or mop on restorer to the material before the drying room yellowing disappears will make no difference; it will still disappear with exposure to light.

H. Additional Important Legal Terms

1. This warranty is governed by and will be construed in accordance with the substantive laws of the Province of Ontario, without regard to any of that province's conflict of laws principles that would require application of the substantive law of another jurisdiction. The United Nations Convention on Contracts for the International Sale of Goods does not apply to this warranty.
2. **THE LIMITED WARRANTY DESCRIBED ABOVE IS FORBO'S SOLE WARRANTY ON FLOORING MATERIALS. ALL OTHER WARRANTIES OR CONDITIONS OF ANY KIND, WHETHER ORAL OR WRITTEN, EXPRESSED OR IMPLIED, STATUTORY OR OTHERWISE, ARE EXPRESSLY DISCLAIMED AND EXCLUDED. WITHOUT LIMITING THE FOREGOING, WE EXPRESSLY DISCLAIM AND EXCLUDE ANY IMPLIED WARRANTIES OR CONDITIONS OF QUALITY, UNINTERRUPTED USE, MERCHANTABILITY OR FITNESS FOR A PERTICULAR PURPOSE.**
3. **THE WARRANTY REMEDIES STATED ABOVE ARE THE SOLE AND EXCLUSIVE REMEDIES FOR FAILURE OF FORBO FLOORING PRODUCTS TO COMPLY WITH THIS LIMITED WARRANTY FOR ANY OTHER CLAIMED DEFECTS IN FORBO FLOORING MATERIALS.**
4. **FORBO'S MAXIMUM AGGREGATE LIABILITY FOR BREACHES OF THIS LIMITED WARRANTY OR FOR ANY OTHER CLAIMED DEFECT IN FORBO FLOORING MATERIALS IS LIMITED TO THE AMOUNT OF THE ORIGINAL PURCHASE PRICE OF THE FLOORING MATERIALS.**
5. **SINCE FORBO'S MAXIMUM LIABILITY IS LIMITED TO THE ORIGINAL PURCHASE PRICE, FORBO SHALL NOT ASSUME LIABILITY FOR DAMAGES OF ANY KIND, INCLUDING:**
   (a) **DIRECT, INDIRECT, SPECIAL, CONSEQUENTIAL, INDICENTIAL OR PUNITIVE DAMAGES, OR**
   (b) **DAMAGES FOR PERSONAL INJURY, PROPERTY DAMAGE, LOSS OF USE OF PREMISES, LOSS OF REVENUES, LOSS OF PROFITS OR DELAYS IN PERFORMANCE.**
6. **THE ABOVE EXCLUSION OF LIABILITY FOR WARRANTIES, CONDITIONS, DAMAGES OR LIABILITY IN EXCESS OF THE ORIGINAL PURCHASE PRICE APPLIES TO ANY CLAIM BROUGHT AGAINST FORBO, REGRDLESS OF WHETHER (A) THE CLAIM RELATES TO THE DESIGN, MANUFACTURE, SALE, DELIVERY, INSTALLATION, SERVICE, USE, REPAIR OR REPLACEMENT OF ANY FORBO FLOORING MATERIALS, (B) THE CLAIM IS BASED ON THE TERMS AND CONDITIONS OF THIS LIMITED WARRANTY, OR (C) THE CLAIM IS BASED ON BREACH OF CONTRACT, BREACH OF WARRANTY, NEGLIGENCE, TORT, PRODUCT LIABILITY, STRICT LIABILITY OR ANY OTHER LEGAL OR EQUITABLE THEORY.**

Forbo Limited Commercial Warranty
Marmoleum® with Topshield2™

7. All disputes with Forbo, including any dispute that relates directly or indirectly to this Limited Warranty or any defect in Forbo flooring products shall be resolved solely by the courts of the Province of Ontario. As conditions of this Limited Warranty, Forbo, the Purchaser and End-User:
   (a) irrevocably submit, attorn and consent to the exclusive jurisdiction of the courts of the Province of Ontario,
   (b) waive any right to object the exclusive jurisdiction of the courts of the Province of Ontario,
   (c) waive any right to rely on the doctrine of forum non-conveniens or to the otherwise argue that the Ontario courts are an inconvenient forum for the resolution of the dispute,
   (d) waive any right to seek the transfer of any Ontario legal action to another jurisdiction,
   (e) waive any right to trial by jury, and
   (f) agree that any final order or judgment rendered by the courts of the Province of Ontario shall be conclusive and binding.
8. As conditions precedent to commencing suit on this Limited Warranty, the Purchaser or End-User must submit a warranty claim to Forbo, and must give Forbo at least thirty (30) days' written notice, at the address shown in Section E.1, of its intent to sue. All actions arising from or in connection with this Limited Warranty must be brought within one (1) year after the Purchaser's submission of its warranty claim to Forbo.
9. The Purchaser and End-User are expressly cautioned that Forbo has not authorized and will not authorize any person, including, without limitation, any field representative, agent, employee, dealer, distributor or contractor to modify the terms of this warranty in any way. The warranty may be modified only in a writing signed by Forbo's Vice President.

Caring for Marmoleum® with Topshield2™

The Forbo Marmoleum® with Topshield2™ product range includes: Marmoleum® sheet (including Marmoleum® Striato Textura), Marmoleum® Decibel sheet, Marmoleum® Composition Sheet (MCS), Walton sheet, Marmoleum® Modular (including Marmoleum® Modular Striato Textura) and Marmoleum® Composition Tile (MCT).

Forbo Marmoleum® products are made from natural ingredients including linseed oil, rosin binders, wood flour, limestone and dry pigments which are mixed and then calendared onto a natural jute backing. Marmoleum® features Topshield2™ – Forbo's high performance factory applied finish. Its double layer UV cured technology delivers extraordinary performance and clear and vibrant colors that remain over time. Marmoleum® with Topshield2™ requires no initial maintenance or polymer application. This means that at the time of installation, cleaning with a neutral pH cleaning solution is all that is necessary. The surface can be repaired or refreshed in cases of accidents or after years of intensive use.

IMPORTANT! Before starting any cleaning procedures on any Forbo products, contact Forbo's Product Support & Education Services for additional information, recommendations or to schedule a site visit. The best results may not be achieved if the chemical and equipment types recommended below are not used. The size of the equipment recommended may also vary based on the size of the space or application type.

NOTE: Forbo Flooring Systems does not warrant or guarantee the performance of other manufacturers' products mentioned in these guidelines. For specific information regarding Forbo's warranty, visit www.forboflooringNA.com or contact Forbo's Product Support & Education Services.

INITIAL CLEANING

Cleaning performed for new installations exposed to normal construction soil and traffic. It is necessary to protect newly installed floors from construction soil, traffic and damage until they are ready for initial cleaning. In order to allow the adhesive to dry and cure properly, wait a minimum of five days following the installation before conducting initial cleaning or other wet cleaning procedures. For installations over non-porous substrates, additional time may be necessary because the adhesive may take longer to dry and cure.

IMPORTANT!! Forbo does not recommend or require the application of finish to Marmoleum®. However, some clients request finish application on newly installed floors. To ensure proper adhesion of the finish to the Topshield2™ surface, contact Forbo's Product Support & Education Services PRIOR to any finish application.

1. Remove all surface soil, debris, sand and grit by dust mopping the floor with 3M™ Easy Trap, sweeping or vacuuming with a wet/dry vacuum such as Tennant/Nobles V-WD-15S or equivalent.
2. Mix a neutral pH cleaning solution according to the label directions. The pH of the cleaner in solution must be between 6.0 – 8.0 pH. Refer to the list at the end of this section for recommended products.
3. Apply the solution to the floor. Do NOT flood the floor. The solution can be applied with either a mop or an automatic scrubber such as Tennant T300, Nobles Speed Scrub 300 or equivalent. Allow the solution to dwell on the floor for 5 – 10 minutes. Additional dwell time may be necessary for heavily soiled areas or for flooring with embossment.
4. Scrub the floor with either a low speed rotary machine such as Tennant/Nobles FM-17-SS or equivalent or an automatic scrubber such as Tennant T300, Nobles Speed Scrub 300 or equivalent using a 3M™ Red Buffer Pad #5100 or equivalent. If using an automatic scrubber, it is recommended to double scrub the floor.
   NOTE: For heavier soil loads or to remove adhesive residue, use a 3M™ TopLine Autoscrubber Pad #5000 or equivalent.
5. Pick up the scrubbing solution with a wet vacuum such as Tennant/Nobles V-WD-15S or equivalent or an automatic scrubber such as Tennant T300, Nobles Speed Scrub 300 or equivalent.
   NOTE: For flooring with embossment, it is easier to recover the solution by running the equipment perpendicular to the embossment.
6. Rinse the entire floor surface with a clean mop using clean, cool water. Pick up rinse water with wet vacuum such as Tennant/Nobles V-WD-15S or equivalent or an automatic scrubber such as Tennant T300, Nobles Speed Scrub 300 or equivalent.
7. Allow the floor to dry thoroughly before allowing traffic.

ROUTINE CLEANING

Cleaning performed a minimum of once a day, depending on the application, type of traffic and hours of operation.

1. Stains or spills should be wiped or mopped up immediately with a damp mop using a neutral pH cleaning solution. Rinse the affected area with clean, cool water. Be sure to allow the floor to dry thoroughly before allowing traffic. The pH of the cleaner in solution must be between 6.0 – 8.0 pH. Refer to the list at the end of this section for recommended products.
2. Remove all surface soil, debris, sand and grit by dust mopping the floor with 3M™ Easy Trap, sweeping or vacuuming with a wet/dry vacuum such as Tennant/Nobles V-WD-15S or equivalent.
3. Mix a neutral pH cleaning solution according to the label directions. The pH of the cleaner in solution must be between 6.0 – 8.0 pH. Refer to the list at the end of this section for recommended products.
4. Apply the solution to the floor. Do NOT flood the floor. The solution can be applied with either a mop or an automatic scrubber such as Tennant T300, Nobles Speed Scrub 300 or equivalent. Allow the solution to dwell on the floor for 5 – 10 minutes. Additional dwell time may be necessary for heavily soiled areas or for flooring with embossment.
5. Scrub the floor with either a low speed rotary machine such as Tennant/Nobles FM-17-SS or equivalent or an automatic scrubber such as Tennant T300, Nobles Speed Scrub 300 or equivalent using a 3M™ Red Buffer Pad #5100 or equivalent. If using an automatic scrubber, it is recommended to double scrub the floor.
   NOTE: For heavier soil loads, a 3M™ TopLine Autoscrubber Pad #5000 or equivalent may be used.

Caring for Marmoleum® with Topshield2™

6. Pick up the scrubbing solution with a wet vacuum such as Tennant/Nobles V-WD-15S or equivalent or an automatic scrubber such as Tennant T300, Nobles Speed Scrub 300 or equivalent.
   NOTE: For flooring with embossment, it is easier to recover the solution by running the equipment perpendicular to the embossment.
7. Rinse the entire floor surface with a clean mop using clean, cool water. Pick up rinse water with wet vacuum such as Tennant/Nobles V-WD-15S or equivalent or an automatic scrubber such as Tennant T300, Nobles Speed Scrub 300 or equivalent.
8. Allow the floor to dry thoroughly before allowing traffic.

INTERIM CLEANING

Cleaning performed as needed, depending on the application, type of traffic and hours of operation. The following processes should be followed when the routine cleaning is not removing the soil from the floor.

1. Remove all surface soil, debris, sand and grit by dust mopping the floor with 3M™ Easy Trap, sweeping or vacuuming with a wet/dry vacuum such as Tennant/Nobles V-WD-15S or equivalent.
2. For light soiling, mix a neutral pH solution according to the label directions. The pH of the neutral cleaner in solution must be between 6.0 – 8.0 pH. For medium or heavy soiling, mix 2 oz. of a general purpose cleaner per gallon of water. The pH of the general purpose cleaner in solution must be between 8.0 – 10.4 pH. Refer to the list at the end of this section for recommended products.
3. Apply the solution to the floor. Do NOT flood the floor. The solution can be applied with either a mop or an automatic scrubber such as Tennant T300, Nobles Speed Scrub 300 or equivalent. Allow the solution to dwell on the floor for 5 – 10 minutes. Additional dwell time may be necessary for heavily soiled areas or for flooring with embossment.
4. Scrub the floor with either a low speed rotary machine such as Tennant/Nobles FM-17-SS or equivalent or an automatic scrubber such as Tennant T300, Nobles Speed Scrub 300 or equivalent using either a 3M™ Red Buffer Pad #5100 or equivalent for light soiling or a 3M™ TopLine Autoscrubber Pad #5000 or equivalent for medium or heavy soiling.
5. Pick up the scrubbing solution with a wet vacuum such as Tennant/Nobles V-WD-15S or equivalent or an automatic scrubber such as Tennant T300, Nobles Speed Scrub 300 or equivalent.
   NOTE: For flooring with embossment, it is easier to recover the solution by running the equipment perpendicular to the embossment.
6. Rinse the entire floor surface with a clean mop using clean, cool water. Pick up rinse water with wet vacuum such as Tennant/Nobles V-WD-15S or equivalent or an automatic scrubber such as Tennant T300, Nobles Speed Scrub 300 or equivalent.
7. Allow the floor to dry thoroughly before allowing traffic.
8. One of the following procedures must be performed:
   a. Spray buff the floor using a low speed rotary machine such as Tennant/Nobles FM-17-SS or equivalent and a 3M™ Red Buffer Pad #5100 or equivalent, followed by dust mopping.
   b. Apply a mop-on restorer according to the label directions. Burnish the floor using a burnisher such as Tennant/Nobles BR-2000-DC or equivalent with a 3M™ Eraser Pad #3600 or equivalent, followed by dust mopping.
   c. Burnish / Dry buff the floor using a burnisher such as Tennant/Nobles BR-2000-DC or equivalent with a 3M™ Eraser Pad #3600 or equivalent, followed by dust mopping.
9. If the floor requires restoration cleaning procedures, contact Forbo's Product Support & Education Services.

NOTE: Weather, traffic and geographical location will influence the required frequency of this procedure. For example, in areas where there are large amounts of snow and chemicals used in the winter months it will likely be necessary to perform this procedure more frequently. In dry climates, or where there is less dirt traffic, it may not be necessary to perform this procedure as frequently.

CAUTION: Marmoleum® with Topshield2™ can be damaged by traditional wet stripping methods. If the above floor care recommendations are followed, wet stripping will NOT be necessary. If wet stripping methods are or have been used on the floor, contact Forbo's Product Support & Education Services for additional information.

Forbo Marmoleum® should be cared for by a staff trained to understand the following:

- A regular floor care program, as described above, should be followed closely.
- Forbo Marmoleum® with Topshield2™ is OCCUPANCY READY following installation.
- The removal of Topshield2™ is NOT recommended.
- If finish is applied, Topsheild2™ is no longer the wear surface and the properties it provides to Marmoleum® will be compromised.
- If applying a third party polymer to Marmoleum®, follow the manufacturer's recommended guidelines.
- It is the responsibility of the chemical manufacturer to provide a resolution for any issues that may arise when using their product on Forbo Marmoleum® and linoleum products.

Caring for Marmoleum® with Topshield2™

RECOMMENDED FLOOR CARE PRODUCTS

The following list of recommended floor care chemicals have been tested for compatibility with Forbo products. This list is provided to offer the best opportunity to care for your flooring and meet the needs of your facility. **If you prefer to use a manufacturer's floor care chemicals that are not listed, be sure to use a corresponding cross-referenced product.** For additional information on a product or for your local supplier, refer to the Contacts section of the Forbo Commercial Floor Care Guide.

Neutral pH Cleaners:

Forbo Neutral pH Cleaner
3M™ Neutral Cleaner 3H
Pro-Link Level 7
Spartan Damp Mop
Diversey Stride
Ecolab® QC 34 High Performance Neutral Floor Cleaner

Spray Buffs:

Forbo Spray Buff
3M™ Top Line Pre-Burnish Conditioner
Pro-Link Enhance
Spartan Spray Buff
Ecolab® Easy Glow Daily Floor Maintainer
Ecolab® Diluted Quik Fill PourPak 330 Floor Restorer

Mop on Restorers:

Forbo Mop on Restorer
3M™ Top Line Pre-Burnish Conditioner
Pro-Link Optimum Response
Spartan SunSwept
Diversey Revive
Ecolab® QC 33 Floor Finish Restorer

General Purpose Cleaners:

Forbo Heavy Duty Cleaner
3M™ General Purpose Cleaner/Concentrate 8H
Pro-Link Synthetic Floor HD Cleaner
Spartan Industrial Pathmaker
Diversey Profi
Diversey GP Forward
Ecolab® QC 35 MAXX Dual Action Floor Cleaner

Forbo's Commercial Floor Care Guide contains additional information and is available for download at www.forboflooringNA.com. For a hard copy, or for additional information, contact Forbo's Product Support & Education Services at 1-800-842-7839.

POLYFLOR™
COVERING THE WORLD

10 YEAR PRODUCT WARRANTY

Polyflor guarantees that the product will be free from any manufacturing defects and that it will provide a minimum of 10 years serviceable life in normal wear and tear circumstances.

This guarantee is dependent upon strict adherence to the following conditions:

1. The respective products are installed strictly in accordance with the instructions as described in the Polyflor Technical Information Manual and to the prescribed Industry Standard, with a Polyflor approved adhesive and in accordance with the manufacturer specification.

2. The products are maintained strictly in accordance with the instructions contained in the products' respective maintenance instructions.

3. Adequate entrance barrier matting protection is provided as detailed in the Polyflor Technical Brochure.

4. The products are used strictly in accordance with manufacturer's specifications, recommendations or instructions.

Polyflor reserves the right to send an authorised representative to verify any claim and to confirm or not any manufacturing defects. Polyflor may also request samples of material to be returned to the factory for inspection and testing by our Technical Department.

In the unlikely event of the product being found to be defective, Polyflor will pay reasonable uplift and relay-costs and provide sufficient replacement material for the affected area.

In providing this guarantee at no extra cost to the end user, Polyflor reserves the right to offer an alternative colour or equal product should a direct replacement no longer be available.

This guarantee does not cover defects arising from incorrect or poor installation or workmanship relating to the installation, excessive moisture, chemical reaction, corrosion, extremes in temperature, abuse and abnormal usage above which the product is specified, scuffs, scratches, indentations.

The material should never be installed over any existing floorcovering or old existing contaminated concrete subfloor.

Prior to commencing any replacement work, Polyflor or their agent reserves the right to visit the installation to investigate the cause of the problem. If Polyflor agree that the product is at fault, they will arrange with the installer the remedial course of action, who will then carry out the necessary work. The replacement will cover the immediate affected area only. Polyflor will not accept or be liable for any liquidated damages or other costs not included in the aforementioned statements. This guarantee does not affect the individual's statutory rights with regard to both the product and services supplied. This guarantee is non-transferable. Proof of purchase will be required for any claim.

Claims under this limited warranty must be made in written form and addressed to the address printed on this letter head.

Polyflor Limited reserves the right to update the product specifications at any time.

James Halstead™ FLOORING

2007 2011

Polyflor Canada Inc.
6350 Northwest Drive,
Mississuaga, ON, Canada L4V 1J7
TEL: 1 905 364 3000 WEB: www.polyflor.ca
SALES: sales@polyflor.ca • SAMPLES: samples@polyflor.ca

SAFETY FLOORING

- The following maintenance instructions are designed to minimise the cost factor, while ensuring that your floorcovering retains the optimum appearance and performance. The incorporation of PUR within the product reduces the intensity of cleaning and the use of chemicals, which helps minimise the effect on the environment, without compromising such key elements as hygiene and underfoot safety.
- Polysafe PUR ranges are designed to resist soiling, which ensures that - even after transportation, installation and the period prior to handover - the intensity of construction clean can be significantly reduced. This will have a beneficial impact on the initial costs.



INITIAL CONSTRUCTION CLEAN

- Remove all loose debris.
- Remove surface dust and grit by sweeping or vacuuming.
- Apply a solution of neutral cleanser (or alkaline cleanser, dependent upon the level of soiling), diluted to the manufacturer's instructions, with a spray over the section to be cleaned. Leave for sufficient time to react with the soiling.
- Pick up the solution with a clean microfibre mop, using a continuous side-to-side motion. When the mop head becomes loaded, it will start streaking the floor. At this point the dirty mop head should be removed and placed into a laundry bag and a clean mop head fitted. The cycle should then be repeated until the whole floor is completed.
- The dirty mop heads should then be laundered, in preparation for reuse.



ROUTINE MAINTENANCE

DAILY

- Remove surface dust and grit by sweeping or vacuum.
- Apply a solution of neutral cleanser (or alkaline cleanser, dependent upon the level of grease or oily contaminates), diluted to the manufacturer's instructions, with a spray over the section to be cleaned. Leave for sufficient time to react with the soiling.
- Pick up the solution with a clean microfibre mop, using a continuous side-to-side motion. When the mop head becomes loaded, it will start streaking the floor. At this point the dirty mop head should be removed and placed into a laundry bag and a clean mop head fitted. The cycle should then be repeated until the whole floor is completed.
- The dirty mop heads should then be laundered, in preparation for reuse.
- Where detergent residue remains on the floor surface, the area should be rinsed completely with clean, warm water, picked up with a wet vacuum and left to dry thoroughly.
- This maintenance procedure has been designed to optimise the benefits of the Polysafe PUR system - the latest in cleaning technology. The maximum benefits are derived from this system by carrying out this quick and simple procedure on a daily basis, and by using clean equipment each time, to maximise dirt pick-up and eliminate streaking.
- More traditional mechanical cleaning methods such as a 165rpm rotary scrubbing machine, deck scrubber or mop and bucket system can be used with the appropriate neutral or alkaline cleanser - full details are available from Polyflor.
- In areas subject to heavy soiling, machine scrubbing should be undertaken on a periodic basis, after neutral or alkaline cleanser has been applied to the floor, diluted to the manufacturer's instructions.



APPLICATION OF A FLOOR DRESSING

- A floor dressing or maintainer containing polish should not be applied to Polysafe PUR ranges, as this may impair the slip resistance but, if in doubt, consult our Technical Support staff.



- Always follow the Health and Safety guidance provided.
  REGULAR CLEANING IS MORE BENEFICIAL TO THE FLOORCOVERING AND MORE COST-EFFECTIVE THAN OCCASIONAL HEAVY CLEANING.
- Cleaners and detergents should be diluted as per the manufacturers' instructions. For recommended products, see the Polyflor Approved Maintenance Products sheet located within the Technical section of www.polyflor.com.
  Polysafe safety flooring ranges are compatible for use with the most commonly used alco-based hand gels and are suitable for steam cleaning on a periodic basis.
- For further clarification and advice on specific applications, consult Polyflor Customer Technical Services on +44 (0)161 767 1912, or email tech@polyflor.com.

POLYFLOR LTD. PO BOX 3 RADCLIFFE NEW ROAD WHITEFIELD MANCHESTER M45 7NR UK
UK SALES DIRECT: +44 (0)161 767 1122 UK SAMPLE REQUESTS: +44 (0)161 767 2551
EXPORT SALES DIRECT: +44 (0)161 767 1913 TECHNICAL SUPPORT: +44 (0)161 767 1912
RECEPTION: +44 (0)161 767 1111 UK FAX: +44 (0)161 767 1128
EXPORT FAX: +44 (0)161 767 1166
E-MAIL: INFO@POLYFLOR.COM WWW.POLYFLOR.COM

James Halstead™ FLOORING

2011

July 2014

POLYFLOR

POLYSAFE™ PUR RANGES

FLOORCARE FOR ALL POLYSAFE PUR RANGES
MODENA PUR,
ARENA PUR,
MOSAIC PUR,
VERONA PUR
WOOD FX PUR,
CORONA PUR,
ASTRAL PUR,
STANDARD PUR,
VOGUE ULTRA PUR AND
WOOD FX ACOUSTIX PUR

POLYFLOR™
COVERING THE WORLD

Limited Warranty

ROPPE.
Proven. Flooring. Experiences.

Roppe Corporation, Inc. manufactures and markets its products under the trade name Roppe. All Roppe products are covered by a warranty period from the date of purchase by the Installer or End User against defects in material and workmanship and conform to product specifications, provided installation, maintenance and use falls within Roppe's current written instructions. Most products, as described below, also carry a Limited Wear Warranty and those details are described on a per product basis. The Limited Wear Warranty is related to "Wear Through" of the product wear layer.

NOTICE OF DEFECT PRIOR TO INSTALLATION

Roppe requests notification of any defect prior to installation. If this occurs, Roppe will replace the material at no charge to the Installer or End User. Failure to notify Roppe prior to installation could result in voided product warranty. The installation of defective material waves any right to product and/or labor reimbursement.

NOTICE OF DEFECT DURING OR AFTER INSTALLATION

If defect is discovered during or after installation, notification must be made to Roppe. Roppe must be permitted the right to a sample or inspection of the installation. Upon inspection of the sample or installation, if Roppe determines the product to be defective, Roppe will repair or replace the determined defective product, subject to the limitations of this warranty, and prorated as described within each product section relevant to the limited manufacturers' and/or limited wear warranty. Intentional installation of defective material waves any right to product and/or labor reimbursement.

INDIVIDUAL PRODUCT LIMITED WARRANTIES

PINNACLE, PINNACLE PLUS, BASEMATES, VISUELLE, 700 SERIES, VINYL & ALPHABASE WALL BASE PRODUCTS

Limited 2 (two) Year Manufacturers' Warranty including conformity to written specifications and free from manufacturing defects, subject to the terms and conditions of this document.

No Commercial or Residential Wear Warranty

If determined by Roppe to be defective, Roppe will replace or repair the material subject to the warranty, however labor costs will be the end user's responsibility except as provided on the following prorated basis:

- Year 1, Material & 100% Reasonable Labor
- Year 2, Material & 50% Reasonable Labor

DIMENSIONS RUBBER, RAISED DESIGN RUBBER, SMOOTH RUBBER, MARBLEIZED RUBBER, SAFETCORK RUBBER, FIESTA RUBBER, MARBLE FIESTA RUBBER, HEALTH & LEARNING RUBBER, DESIGNER'S CHOICE RUBBER & SPIKE/SKATE RUBBER TILE PRODUCTS

Limited 1 (one) Year Manufacturers' Warranty including conformity to written specifications and free from manufacturing defects, subject to the terms and conditions of this document.

Limited 5 (five) Year Commercial Wear Warranty

If determined by Roppe to be defective and/or a wear warranty issue, Roppe will replace or repair the material subject to the warranty, however labor costs will be the end user's responsibility except as provided on the following prorated basis:

- Year 1, Material & 100% Reasonable Labor
- Year 2, Material & 50% Reasonable Labor
- Years 3-5, Material Only

ESD RUBBER STATIC CONTROL TILE

Limited 1 (one) Year Manufacturers' Warranty including conformity to written specifications and free from manufacturing defects, subject to the terms and conditions of this document.

Limited 10 (ten) Year Commercial Wear Warranty
Limited 10 (ten) Year Conductivity Warranty

If determined by Roppe to be defective and/or a wear warranty issue, Roppe will replace or repair the material subject to the warranty, however labor costs will be the end user's responsibility except as provided on the following prorated basis:

- Year 1, Material & 100% Reasonable Labor
- Year 2, Material & 50% Reasonable Labor
- Years 3-10, Material Only
- Conductivity Warranty applies to product readings between ($1 \times 10^6 - 1 \times 10^9$) for the warranted life of the product. Roppe does not recommend and therefore does not warrant the performance of floor finishes, sealers, waxes of any kind, nor will be held liable if the conductivity or dissipated properties of the flooring is either reduced or eliminated, or if the flooring is adversely affected in any way.

TUFLEX TITAN & TUFLEX SPARTUS RECYCLED RUBBER TILE

Premature wear in heavy use areas (Penalty Boxes, Walkways to the Ice, Etc.) is excluded from this warranty and will not be covered.

Limited Warranty

ROPPE.
Proven. Flooring. Experiences.

Limited 1 (one) Year Manufacturers' Warranty including conformity to written specifications and free from manufacturing defects, subject to the terms and conditions of this document.

Limited 5 (five) Year Commercial Wear Warranty

If determined by Roppe to be defective and/or a wear warranty issue, Roppe will replace or repair the material subject to the warranty, however labor costs will be the end user's responsibility except as provided on the following prorated basis:

- Year 1, Material & 100% Reasonable Labor
- Year 2, Material & 50% Reasonable Labor
- Years 3-5, Material Only

Recoil Fitness Flooring

Material may contain skiving marks from the manufacturing process; Roppe does not consider these defects unless they are excessive in nature. Installation of material containing these skive marks is considered acceptance of the material and therefore waiving the right of replacement except under special circumstances determined by Roppe. Recoil is made from recycled materials and may contain some light shading within the black material used for production. Roppe recommends dry laying the floor for acceptance prior to installation. In areas where Recoil is subjected to Ice Skates, Roppe requires the use of blade guards to ensure full valid warranty is in effect.

Limited 1 (one) Year Manufacturers' Warranty including conformity to written specifications and free from manufacturing defects, subject to the terms and conditions of this document.

Limited 3 (three) Year Commercial Wear Warranty
If determined by Roppe to be defective and/or a wear warranty issue, Roppe will replace or repair the material subject to the warranty, however labor costs will be the end user's responsibility except as provided on the following prorated basis:

- Year 1, Material & 100% Reasonable Labor
- Year 2, Material & 50% Reasonable Labor
- Year 3, Material Only

Rop-Cord Recycled Rubber Tile

Limited 1 (one) Year Manufacturers' Warranty including conformity to written specifications and free from manufacturing defects, subject to the terms and conditions of this document.

Limited 5 (five) Year Commercial Wear Warranty

Lifetime Delamination Warranty
If determined by Roppe to be defective and/or a wear warranty issue, Roppe will replace or repair the material subject to the warranty, however labor costs will be the end user's responsibility except as provided on the following prorated basis:

- Year 1, Material & 100% Reasonable Labor
- Year 2, Material & 50% Reasonable Labor
- Years 3-5, Material Only
- Years 5+ for Delamination, Affected Material Only

Northern Timbers Premium Vinyl Wood Plank & Northern Leathers Premium Vinyl Leather Tile

Limited 1 (one) Year Manufacturers' Warranty including conformity to written specifications and free from manufacturing defects, subject to the terms and conditions of this document.

Limited 10 (ten) Year Commercial Wear Warranty
Limited 20 (twenty) Year Residential Wear Warranty

If determined by Roppe to be defective and/or a wear warranty issue, Roppe will replace or repair the material subject to the warranty, however labor costs will be the end user's responsibility except as provided on the following prorated basis:

- Year 1, Material & 100% Reasonable Labor
- Year 2, Material & 50% Reasonable Labor
- Years 3-10, Material Only
- Residential Years 11-20, Material Only

Northern Timbers Solutions Wood Plank

Limited 1 (one) Year Manufacturers' Warranty including conformity to written specifications and free from manufacturing defects, subject to the terms and conditions of this document.

Limited 7 (seven) Year Light Commercial Wear Warranty
Limited 20 (twenty) Year Residential Wear Warranty

Light Commercial is defined by Roppe as no rolling loads.
If determined by Roppe to be defective and/or a wear warranty issue, Roppe will replace or repair the material subject to the warranty, however labor costs will be the end user's responsibility except as provided on the following prorated basis:

- Year 1, Material & 100% Reasonable Labor
- Year 2, Material & 50% Reasonable Labor
- Years 3-10, Material Only
- Residential Years 11-20, Material Only

Limited Warranty

ROPPE.
Proven. Flooring. Experiences.

ESD Vinyl Static Control Tile

Limited 1 (one) Year Manufacturers' Warranty including conformity to written specifications and free from manufacturing defects, subject to the terms and conditions of this document.

Limited 10 (ten) Year Commercial Wear Warranty
Limited Lifetime Conductivity Warranty

If determined by Roppe to be defective and/or a wear warranty issue, Roppe will replace or repair the material subject to the warranty, however labor costs will be the end user's responsibility except as provided on the following prorated basis:

- Year 1, Material & 100% Reasonable Labor
- Year 2, Material & 50% Reasonable Labor
- Years 3-10, Material Only
- Conductivity Warranty applies to Conductive products to read between ($2.5 \times 10^4 - 1 \times 10^6$) and Dissipative products to read between ($1 \times 10^6 - 1 \times 10^9$) for the life of the product. Roppe does not recommend and therefore does not warrant the performance of floor finishes, sealers, waxes of any kind, nor will be held liable if the conductivity or dissipated properties of the flooring is either reduced or eliminated, or if the flooring is adversely affected in any way.

SafeTcork Solid Vinyl Tile

Limited 1 (one) Year Manufacturers' Warranty including conformity to written specifications and free from manufacturing defects, subject to the terms and conditions of this document.

Limited 10 (ten) Year Commercial Wear Warranty

If determined by Roppe to be defective and/or a wear warranty issue, Roppe will replace or repair the material subject to the warranty, however labor costs will be the end user's responsibility except as provided on the following prorated basis:

- Year 1, Material & 100% Reasonable Labor
- Year 2, Material & 50% Reasonable Labor
- Years 3-10, Material Only

Rubber Stair Tread Products

Limited 1 (one) Year Manufacturers' Warranty including conformity to written specifications and free from manufacturing defects, subject to the terms and conditions of this document.

Limited 3 (three) Year Commercial Wear Warranty on Light Duty Treads (As noted in catalog)

Limited 5 (five) Year Commercial Wear Warranty on Heavy Duty Treads

If determined by Roppe to be defective and/or a wear warranty issue, Roppe will replace or repair the material subject to the warranty, however labor costs will be the end user's responsibility except as provided on the following prorated basis:

- Year 1, Material & 100% Reasonable Labor
- Year 2, Material & 50% Reasonable Labor
- Years 3-5, Material Only

Abrasive Safety Inserts – Limited 1 (one) Year Manufacturer's Warranty and Commercial Wear Warranty

Smooth & Ribbed Rubber Inserts – Same Limited Manufacturer's Warranty and Commercial Wear Warranty as the Roppe Tread carrying it.

Vinyl Stair Tread Products

Limited 1 (one) Year Manufacturers' Warranty including conformity to written specifications and free from manufacturing defects, subject to the terms and conditions of this document.

Limited 5 (five) Year Commercial Wear Warranty

If determined by Roppe to be defective and/or a wear warranty issue, Roppe will replace or repair the material subject to the warranty, however labor costs will be the end user's responsibility except as provided on the following prorated basis:

- Year 1, Material & 100% Reasonable Labor
- Year 2, Material & 50% Reasonable Labor
- Years 3-5, Material Only

Abrasive Safety Inserts – Limited 1 (one) Year Manufacturer's Warranty and Commercial Wear Warranty

Smooth & Ribbed Rubber Inserts – Same Limited Manufacturer's Warranty and Commercial Wear Warranty as the Roppe Tread carrying it.

Metal Stair Tread Products

Limited 1 (one) Year Manufacturers' Warranty including conformity to written specifications and free from manufacturing defects, subject to the terms and conditions of this document.

Limited 5 (five) Year Commercial Wear Warranty

If determined by Roppe to be defective and/or a wear warranty issue, Roppe will replace or repair the material

subject to the warranty, however labor costs will be the end user's responsibility except as provided on the following prorated basis:

- Year 1, Material & 100% Reasonable Labor
- Year 2, Material & 50% Reasonable Labor
- Years 3-5, Material Only

Rubber Accessories, Vinyl Accessories & Subfloor Leveler

Limited 1 (one) Year Manufacturers' Warranty including conformity to written specifications and free from manufacturing defects, subject to the terms and conditions of this document.

No Commercial or Residential Wear Warranty.

If determined by Roppe to be defective, Roppe will replace or repair the material subject to the warranty, however labor costs will be the end user's responsibility except as provided on the following prorated basis:

- Year 1, Material & 100% Reasonable Labor

Adhesives

Limited 1 (one) Year Manufacturers' Warranty including conformity to written specifications and free from manufacturing defects, subject to the terms and conditions of this document.

We provide a bond warranty that covers the life of the wear warranty of the Roppe product the adhesive is being used with. This is as long as it is the recommended adhesive used appropriately per the written documentation. Replacement schedule will fall under the same schedule as the installed Roppe product.

ALL ROPPE PRODUCTS

The described Limited Warranty applies to all Roppe products, which are installed, maintained and used within the written recommendations of Roppe through the current documented specifications at the time of purchase and installation for the product. To be considered eligible for replacement under this documented warranty, notice must be made 15 (fifteen) days of discovery of the defect by submission of a claim to the appropriate Roppe representative. Appropriate Roppe representatives include active Distribution and/or Regional Territory Managers. Roppe reserves the right to replace the determined defective product with a product of its choice, within reason, due to the unavailability of installed original product or discontinued product offering. Roppe will only be responsible for the replacement of affected Roppe products and products used to install Roppe products. We will not be responsible for other products used in conjunction with Roppe products.

WARRANTY EXCLUSIONS

This written Roppe Limited Warranty does not include issues that fall into the following:

- Any promise made by any salesperson or representative that is not expressly made in written form.
- Workmanship errors, Roppe products should be installed by professional flooring contractors who have demonstrated expertise in the installation of commercial flooring.
- Material installed with obvious defects that are not reported prior to installation.
- Variations in embossing, mottling, color or shade to any products to any photographs, printed brochures and samples provided as marketing tools due to the uncontrolled nature of the samples once they leave the possession of Roppe.
- Fading and/or Discoloration resulting from heavy sunlight and/or UV light exposure from direct and/or indirect glass-filtered sunlight.
- Tears, burns or damage due to improper use, installation or maintenance including cleaning materials and methods.
- Unreasonable labor costs and labor cost outside of the described prorated schedule.
- Any concern directly related to the use of a non-approved Roppe adhesive unless approval is given in written form.
- Concerns created from moisture or alkali in the substrate. Roppe requires testing for moisture and alkali prior to installation and all results made available for review upon request.
- Concerns created from markings and/or contamination that "transfer" and/or "bleed through" causing discoloration or staining.
- Concerns from telegraphing of the substrate or improperly prepared substrate.
- Concerns from product installed over raised access panels creating uneven areas within the flooring surface.
- Damage from stiletto high heels, spiked heels, spiked footwear, improper leg and/or chair casters or protection, damaged leg and/or chair casters or protection. The suitability and warranty of casters and/or protection devices used on the flooring surfaces are the responsibility of the appliance or furniture manufacturers and not Roppe.
- Damage resulting from the use of automobiles, pallet jacks and/or forklift traffic.

- Damage, deterioration or premature wear from the use of cleats, spikes (other than Recoil) and/or ice skates without blade guards (other than Spike/Skate & Tuflex).
- Product installed in restaurants, commercial kitchens, cafeterias, work areas or shops in which the products are exposed to oils and grease. Oil & Grease Resistant formulation is recommended for these areas (excluding commercial kitchens) while following the prescribed maintenance programs.
- Products installed outdoors (other than Recoil & Tuflex) as Roppe products are designed to perform within indoor applications only.
- Any product sold as "seconds," "mill run," "nonconforming," or otherwise designated as non-first quality materials. These items are sold "as is."
- Any additional expenses associated with overtime, replacing or moving appliances or furniture, interruption of business, loss of use or other related costs associated with the replacement of defective product.

WARRANTY DISCLAIMER

ROPPE MAKES NO WARRANTIES, EXPRESSED OR IMPLIED TO MERCHANTABILITY OR FITNESS FOR USE WITH ANY ROPPE PRODUCT.

The above written warranties supersede any previous written warranties described in any product literature. Roppe is not responsible for an inaccuracies or misinterpretations of this Limited Warranty document.

The above written warranties are in lieu of any warranties which are expressed or implied and Roppe shall not be held liable for any incidental or consequential damages resulting from any defect, negligence, breach of expressed or implied warranty, except where the exclusion or limitation of incidental or consequential damages is prohibited by state law. These warranties provide specific legal rights; these and other rights may vary from state to state. To learn the legal rights in a specific state, consult the local or state Consumer Affairs Office or the State Attorney General.

Pinnacle Rubber Wall Base

MADE IN THE USA

PRODUCT QUICK SPEC

ROPPE.

Proven. Flooring. Experiences.

1. MANUFACTURER

Roppe Corporation
1602 N. Union Street
P.O. Box 1158
Fostoria, Ohio USA 44830-1158
t: (419) 435.8546 | tf: (800) 537.9527
f: (419) 435.1056
E-mail: sales@roppe.com | Internet: www.roppe.com

2. PRODUCT DESCRIPTION

Roppe Pinnacle Rubber Base is designed for use in commercial and residential wall base applications. PVC free Pinnacle Base is the professional's choice, because 100% Type TS Pinnacle rubber base is highly durable and extremely flexible, allowing for easy installations around columns, corners and architectural curves.

Available Styles (All Dimensions Nominal)



Profile: Standard Cove
Gauge: 1/8" (3.2 mm)
Heights: 2 1/2" (63.5 mm), 3" (76.2 mm), 3 1/2" (88.9 mm), 4" (101.6 mm), 4 1/2" (114.3 mm), 5" (127 mm), 5 1/2" (139.7 mm), 6" (152.4 mm)
Lengths: 48" (1.22 m) Pieces & 120' (36.58 m) Coils
Factory Corners: Inside & Outside Corners in 2 1/2" (63.5 mm), 4" (101.6 mm), 6" (152.4 mm) heights with 2 1/4" (57.15 mm) returns



Profile: Standard No Toe
Gauge: 1/8" (3.2 mm)
Heights: 2 1/2" (63.5 mm), 3" (76.2 mm), 3 1/2" (88.9 mm), 4" (101.6 mm), 4 1/2" (114.3 mm), 5" (127 mm), 5 1/2" (139.7 mm), 6" (152.4 mm)
Lengths: 48" (1.22 m) Pieces & 120' (36.58 m) Coils
Factory Corners: Outside Corners in 2 1/2" (63.5 mm), 4" (101.6 mm) heights with 2 1/4" (57.15 mm) returns



Profile: Butt Toe
Gauge: 1/8" (3.2 mm)
Heights: 4" (101.6 mm)
Lengths: 48" (1.22 m) Pieces
Factory Corners: No Corners Available



Profile: Long Toe
Gauge: 1/8" (3.2 mm)
Heights: 4" (101.6 mm)
Lengths: 48" (1.22 m) Pieces
Factory Corners: Outside Corners in 4" (101.6 mm) height with 2 1/4" (57.15 mm) returns



Profile: Sanitary Toe
Gauge: 1/8" (3.2 mm)
Heights: 4" (101.6 mm)
Lengths: 48" (1.22 m) Pieces
Factory Corners: Outside Corners in 4" (101.6 mm) height with 3 3/4" (95.25 mm) returns

Inside & Outside Corner Blocks



Gauge: 1/2" (12.77 mm)
Width: 1" (25.4 mm)
Heights: Available in all heights matching Pinnacle wall base heights. Custom order height as needed and Roppe recommends that corner blocks are ordered at least 1/4" taller than the finished height of the wall base being installed with. Any necessary corner height reductions can be achieved by simply trimming the bottom end of the corner blocks.

Inside & Outside Micro Corner Blocks



Gauge: 0.060" – 0.080" (1.5 mm – 2 mm)
Width: 1" (25.4 mm)
Heights: Available in all heights matching Pinnacle wall base heights. Custom order height as needed and Roppe recommends that corner blocks are ordered at least 1/4" taller than the finished height of the wall base being installed with. Any necessary corner height reductions can be achieved by simply trimming the bottom end of the corner blocks.

3. TECHNICAL DATA

ASTM F 1861 - Type TS, Group 1, Styles A, B & C
ASTM E 648, Critical Radiant Flux - Class 1 >.45 W/cm^2
ASTM E 662, Smoke Density - Passes <450
ASTM E 84, Surface Burning - Class C

According to the BOCA (Building Officials & Code Administrators International Inc.) codes and the NFPA (National Fire Protection Agency), Accessories are considered incidental trim. According to these sections, any incidental trim not in excess of 10% of the aggregate wall and ceiling area of any room or space may be Class C material in occupancies where interior finish of Class A or Class B is required.

4. LIMITATIONS

Roppe Pinnacle Rubber Wall Base is for indoor use only. Do not install on any surface exposed to moisture or extreme temperature changes. Do not install in areas subject to vegetable or petroleum based oils & greases. Fading can

occur from extensive exposure to heavy direct or glass-filtered sunlight, or unfiltered ultra-violet rays.

5. INSTALLATION
General Preparation and Conditioning
Allow all trades to complete work prior to installation of Pinnacle Wall Base. Deliver all materials to the installation location in its original packaging with labels intact. Maintain the installation area, material, and adhesive between 65° F (18° C) and 85° F (30° C) for at least 48 hours before installation, during installation, and after the installation.

Wall Surface Inspection
Use only on structurally sound interior wall surfaces such as dry plaster, cured drywall, exterior grade plywood (Group 1, CC type), concrete and masonry that is clean, smooth, dry and structurally sound. All surfaces must be free from moisture, alkali, old adhesive, dust dirt, wax, oil, grease, loose paint or plaster, nonporous wall coverings or paints and other extraneous coatings or materials that could prevent a successful bond. Any rough or uneven surfaces may telegraph through the wall base. Follow the manufacturer's recommendations for any patching materials.

Adhesive for Porous Substrates
1100 Wall Base Adhesive is a premium solvent free Acrylic adhesive with aggressive wet suction grip for all Roppe Wall Base products. Coverages are described on the 1100 Wall Base Adhesive quick spec.

Adhesive for Non-Porous Substrates
Use a premium contact adhesive for installation over all non-porous substrates such as metal, FRP panels, etc.

6. MAINTENANCE
Do not clean, rub or apply lateral or vertical pressure to the Pinnacle Rubber Wall Base for at least 72 hours after the installation is complete to allow the adhesive to properly cure. Pinnacle Wall Base can be routinely cleaned by wiping with a soft cloth slightly dampened with warm water or by using a properly diluted neutral pH cleaner. Some disinfectants, cleaning agents, floor maintenance products and pesticides may stain or damage the surface of the Pinnacle Rubber Wall Base. If applying finish to flooring, take necessary precautions to keep finish from the Pinnacle Rubber Wall Base. If applying finish to the Pinnacle Rubber Wall Base, test inconspicuous area first for compatibility.

7. AVAILABILITY AND COST
Products are available through Roppe distributors. Contact Roppe Customer Service (800) 537-9527 or visit www.roppe.com.

8. TECHNICAL ASSISTANCE
Technical service information and assistance may be obtained by calling Roppe Customer Service at 1-800-537-9527, or by visiting www.roppe.com.

9. SAMPLES
Obtain samples by calling Roppe Customer Service at 1-800-537-9527, or by visiting www.roppe.com.

10. LIMITED WARRANTY
Limited two (2) Year Manufacturer's Warranty

For complete substrate preparation, installation and/or maintenance instructions please visit www.roppe.com

ROPPE.

pinnacle

Maintenance Overview

Rubber wall base does not typically require specialized maintenance within the parameters of a maintenance program. However, these products may require occasional cleaning, which is usually consistent with the adjoining floor covering. The frequency of daily and routine maintenance will depend upon the amount and type of traffic and wear in the area.

When installing Pinnacle wall base in areas where desks, chairs and or furniture with castors will be used or in areas where auto-scrubbers and/or vacuums will be used, it is extremely important to protect the base from unnecessary damage due to moving furniture or equipment. Whenever possible, prevent damage and abuse to wall base.

Always use untreated, new or thoroughly cleaned cloth when conducting daily or routine maintenance. Do not use Kerosene, Gasoline, Naphtha and/or other solvents to clean wall base. As with any maintenance program, be sure to use proper PPE (Personal Protective Equipment) per the cleaning product SDS and ensure all maintenance procedures are conducted per the cleaning products instructions.

Additional Information

Approved Cleaners
- Excelsior NC-900 Neutral Cleaner

Approved Finish Removers
- Excelsior PR-930 Performance Remover

Technical Documents & Support
Additional product resources and technical documents are available online at **roppe.com.** For additional technical support, send an e-mail to **solutions@rhctechnical.com.**

1. POST-INSTALLATION CHECKLIST

- When moving furniture or heavy equipment, protect wall base from scuffing and scratching that may not come out during the maintenance procedures.
- ***DO NOT*** use vacuums or electric brooms which have beater bars, hard plastic bottoms, a rubber bumper or are lacking proper padding or protection, as this may cause marking, discoloration, scratching and loss of sheen.
- ***DO NOT*** use detergents, abrasive, alkaline or acidic cleaners, cleaning agents which contain oil or solvents, as well as "mop and shine" type products, as they will dull the finish and sheen and potentially damage the flooring material.
- ***DO NOT*** clean area per the adhesives traffic limits (48-72 hours) to allow proper curing of the adhesive.
- ***DO NOT*** flood the area when cleaning.
- ***DO NOT*** allow the cleaning solution or topical moisture to work its way beneath the material, as this can result in an adhesive and/or installation failure.

2. INITIAL MAINTENANCE

Ensure that adhesive has cured for recommended period of time prior to conducting initial maintenance. Remove any protective coverings prior to cleaning. Sweep, dust or wipe material to remove any dirt, dust or debris. DO NOT use vacuums or electric brooms which have beater bars, hard plastic bottoms, a rubber bumper or are lacking proper padding or protection, as this may cause marking, discoloration, scratching and loss of sheen. Do not use detergents, abrasive cleaners or "mop and shine" type products, as they will dull the finish and sheen of the material.

Mix 2-4 ounces of Excelsior NC-900 Neutral Cleaner per gallon of clean, potable water. Use a clean towel or cloth to apply cleaner to material. If heavily soiled, an additional cleaning may be required. Use clean towel or cloth to remove any and all excess cleaning solution. Rinse area with clean, cool water and allow material to dry entirely. Ensure material is clean and that all all cleaning residue has been removed (this may require additional rinsing).

3. DAILY MAINTENANCE

Ensure that initial maintenance has been conducted prior to conducting daily maintenance. Sweep, dust mop or wipe material to remove any dirt, dust or debris.

Mix 2-4 ounces of Excelsior NC-900 per gallon of clean, potable water. Use a clean mop or cloth to clean spills, dirt buildup and other debris. Allow material to dry before allowing foot traffic.

4. MATERIAL PROTECTION

Protect newly installed material with construction grade paper or protective boards, such as Masonite or Ram Board, to protect material from damage by other trades. Limit usage and foot traffic according to the adhesive's requirements. When moving appliances or heavy furniture, protect wall base from scuffing and tearing using temporary floor protection.

For more information regarding cleaner application or finish removal, please consult the associated Excelsior product data sheet.

WARRANTY LETTER

Section 10 28 13 – Washroom Accessories

A warranty letter will be provided by Bobrick

Bobrick Washroom Equipment, Inc.

Product Warranties and Limitations

The following Bobrick products are warranted to be free from defects in workmanship and material under normal usage from the date of purchase for the periods set forth below. (*Rust and discoloration to stainless steel parts resulting from exposure to harsh environmental and/or chemical conditions are not considered to be defects in workmanship or material and there is no expressed or implied warranty for such condition. Refer to Bobrick Advisory Bulletin TB-21, Stainless Steel Cleaning and Maintenance.*):

Washroom Accessories / Soap Dispensers	***Limited Warranty***
ConturaSeries® Washroom Accessories	3 years
Soap Dispensers B-26607, B-26617, B-26627, B-26637, B-306, B-4063, B-4112, B-822 Series, B-823, B-8231, B-8236, B-82316, B-824, B-840, B-845, B-846, B-848 B-849, B-850, B-855, B-856, B-858	3 years
B-830 SureFlo® Soap System Soap Pumps	Lifetime warranty provided Bobrick SureFlo Soap is used exclusively with this product.
Designer Faucets B-8870, B-8875, B-8876, B-8878	3 years
Mirrors[1]	
B-165, B-1658, B-166 Series B-290, B-2908, B-292, B-293, B-294 Series	15 years
B-167, B-168, B-169 LED Series	3 years
Hand Dryers[2]	
B-3725	Motor brushes 3 years; Ceramic water absorbent surface 1 year; all other parts 5 years
B-750 AirCraft®	Motor brushes 3 years; all other parts 10 years
B-708 AirGuard™	Motor brushes 3 years; all other parts 10 years
B-710 Compac™	1 year
B-7120, B-7128 TrimDry™	Motor brushes 3 years; all other parts 10 years
B-7125 InstaDry™	5 years
B-7180, B-7188 TerraDry™	Motor brushes 3 years; all other parts 10 years
B-770; B-778 DuraDry™	Motor brushes 3 years; all other parts 10 years

The following Bobrick dryers warranties is limited to the repair or exchange of defective parts at the option of Bobrick and is only extended to the original owner of the installed unit against defects in factory workmanship or material under normal use and service.

Koala Kare Products®[3]	
Baby Changing Stations KB101-00, KB-110-SSRE, KB110-SSWM, KB200-00, KB200-SS	5 years
Child Protection Seat KB102-00	5 years

Toilet Partitions

***Toilet Partitions*[4]**	
HPL AccentSeries™, 1530	5 Year[5]
HPL ClassicSeries®, 1540	2 Year[5]
HPL DesignerSeries™, 1040	2 Year[5]
HPL MetroSeries™, 1550	2 Year[5]
HPL TrimLineSeries™, 1030	5 Year[5]
SierraSeries®, 1090	25 years[6]
DuraLine® Series, 1080/1180	25 years
Toilet Partition Hardware	***1 year*[7]**

[1] The following Bobrick mirrors are warranted against silver spoilage from the date of purchase for the periods set forth.

[2] The following Bobrick hand dryers are warranted to be free from defects in workmanship and material under normal usage from the date of purchase for the periods set forth.

[3] The following Koala Kare® Products are warranted to be free of defects in workmanship and material under normal usage, and a replacement policy against vandalism from the date of purchase for periods set forth.

[4] The following Bobrick toilet partition panels, doors and stiles are warranted against breakage, corrosion, delaminating and defects in workmanship from the date of purchase for the periods set forth (*this limited warranty is conditioned on the toilet partitions being properly installed, used and serviced*).

[5] Spraying down or hosing HPL partitions voids warranty.

[6] SCRC is a natural material comprised of wood chips, dyes and resins with a melamine surface. Edges lack a melamine surface and may discolor in environments with significant UV lighting. Discoloration of edges, should it occur, is not covered under warranty.

[7] *All hardware and mounting brackets are guaranteed to be free from defects in material and workmanship provided for a period of one year from date of purchase. (this limited warranty is conditioned on the hardware being properly installed, used and serviced).*

Other Products

Bobrick washroom accessories not listed above and hardware for all series of Bobrick toilet partitions are warranted to be free from defects in workmanship and material under normal usage service for one year from the date of purchase. (*Rust and discoloration to stainless steel parts resulting from exposure to harsh environmental and/or chemical conditions are not considered to be defects in workmanship or material and there is no expressed or implied warranty provided for such condition. Refer to Bobrick Advisory Bulletin TB-21, Effective Ways to Clean Stainless Steel.*)

Limitations on Warranties

In all instances, the purchaser's exclusive remedy against Bobrick is for the repair or replacement, at Bobrick's option, of warranted defective products or parts. Bobrick will also bear the cost of the purchaser's return of defective products or parts to Bobrick. Bobrick's warranties set forth above do not cover damage resulting from vandalism. No other remedy (including, but not limited to, damages for field labor charges, lost profits, lost sales, injury to persons or property or any other incidental or consequential losses) is available.

Date of Terms: Last updated 10/12/18