Architectural/Structural Operation & Maintenance Manual

for the

Iqaluit Wastewater Treatment Plant –

Conversion & Expansion – Phase 1

Iqaluit, Nunavut

Chapter 1

Year of Completion: 2006

Original Scope: Design and upgrade existing Wastewater Treatment Plant to meet current and future demands.

This manual has been updated to include:

Date	Description of Change

Iqaluit Wastewater Treatment Plant – Conversion & Expansion – Phase 1

Project History

The City of Iqaluit:	**City of Iqaluit Public Works & Engineering** **P.O. Box 460** **Iqaluit, NU X0A 0H0** **Mr. Geoff Baker** **Phone: (867) 975-8502** **Fax: (867) 975-8505**
Project Engineer:	**Earth Tech Canada Inc.** **17203-103 Ave** **Edmonton, Alberta T5S 1J4** **Mr. Glenn Prosko, P.Eng.** **Phone: (780) 488-6800** **Fax: (780) 488-2121**
General Contractor:	**Kudlik Construction Ltd.** **P.O. Box 727 1519 Federal Road** **Iqaluit, NU X0A 0H0** **Mr. Martin Simard** **Phone: (867) 979-1166** **Fax: (867) 979-1169**
Mechanical Subcontractor:	**Sifec North Inc.** **P.O. Box 727 1519 Federal Road** **Iqaluit, NU X0A 0H0** **Mr. Guy Fauteux, Pres. P.Eng.** **Phone: (866) 437-4001** **Fax: (450) 430-7106**
Electrical Subcontractor:	**Sifec North Inc.** **P.O. Box 727 1519 Federal Road** **Iqaluit, NU X0A 0H0** **Mr. Guy Fauteux, Pres. P.Eng.** **Phone: (866) 437-4001** **Fax: (450) 430-7106**
Instrumentation Subcontractor:	**Sifec North Inc.** **P.O. Box 727 1519 Federal Road** **Iqaluit, NU X0A 0H0** **Mr. Guy Fauteux, Pres. P.Eng.** **Phone: (866) 437-4001** **Fax: (450) 430-7106**

Architectural/Structural Operation & Maintenance Manual

for the

Iqaluit Wastewater Treatment Plant – Conversion & Expansion – Phase 1

Iqaluit, Nunavut

Chapter 2

INDEX

Chapter 1 INTRODUCTION 1-1
Project History 1-2

Chapter 2 INDEX 2-1

Chapter 3 BACKGROUND AND DESIGN DATA ..... **Error! Bookmark not defined.**
3.1 General ..... **Error! Bookmark not defined.**
3.2 Background ..... **Error! Bookmark not defined.**
3.3 New Process Description ..... **Error! Bookmark not defined.**
3.4 New Building (General) ..... **Error! Bookmark not defined.**
3.4.1 New Building Lower Floor ..... **Error! Bookmark not defined.**
3.4.2 New Building Upper Floor ..... **Error! Bookmark not defined.**
3.4.3 Lower Wall Construction ..... **Error! Bookmark not defined.**
3.4.4 Upper Wall Construction ..... **Error! Bookmark not defined.**
3.4.5 New Building Interior Wall Construction. **Error! Bookmark not defined.**
3.4.6 New Building Roof Construction **Error! Bookmark not defined.**
3.4.7 New Electrical Room Construction ..... **Error! Bookmark not defined.**
3.4.8 New Lab Room Construction ..... **Error! Bookmark not defined.**
3.4.9 Doors and Stairs ..... **Error! Bookmark not defined.**
Chapter 4 SCHEMATICS AND FUNCTIONAL DATA ..... **Error! Bookmark not defined.**
4.1 General ..... **Error! Bookmark not defined.**
Chapter 5 COMPONENT DETAILS ..... **Error! Bookmark not defined.**
5.1 General Overview ..... **Error! Bookmark not defined.**
Chapter 6 OPERATING PROCEDURES ..... **Error! Bookmark not defined.**
6.1 General ..... **Error! Bookmark not defined.**
Chapter 7 MAINTENANCE ..... **Error! Bookmark not defined.**
7.1 General Maintenance ..... **Error! Bookmark not defined.**
7.2 Keep it Clean ..... **Error! Bookmark not defined.**
7.3 Keep it Tight ..... **Error! Bookmark not defined.**
7.4 Renewal Parts ..... **Error! Bookmark not defined.**
7.5 Parts and Equipment Ordering Procedure . **Error! Bookmark not defined.**

7.6 Scheduled Preventative Maintenance .....**Error! Bookmark not defined.**

Chapter 8 TESTING AND CERTIFICATION DATA ..... **Error! Bookmark not defined.**
8.1 General ..... **Error! Bookmark not defined.**
Chapter 9 MANUFACTURER DATA AND SERVICE INFORMATION .. **Error! Bookmark not defined.**
9.1 General ..... **Error! Bookmark not defined.**
Chapter 10 APPENDIX ..... **Error! Bookmark not defined.**
10.1 General ..... **Error! Bookmark not defined.**
10.2 Photographs ..... **Error! Bookmark not defined.**
10.3 Drawings ..... **Error! Bookmark not defined.**

Chapter 3

BACKGROUND AND DESIGN DATA

3.1 General

The discussion in this document includes the background and design data for the Architectural and structural systems included in the Iqaluit Wastewater Treatment Plant only. Refer to the Electrical & Instrumentation, Mechanical and Process Operation and Maintenance Manuals for information on those systems.

3.2 Background

Earth Tech (Canada) Inc. (ET) was retained by the City of Iqaluit to undertake the design of improvements/upgrades to the Iqaluit WWTP, and provide inspection services during the construction stage of the project.

Further information is provided in the following reports:

- "Structural Review of the Process Tanks at the Iqaluit Reclamation Facility" prepared by CH_2M Gore & Storrie.
- "Sewage Treatment Plant Investigation" prepared by Earth Tech (Canada) Inc.
- "Completion Study for the Iqaluit Wastewater" prepared by CH_2M Hill.

As part of this project, it is the City's intention to address the deficiencies and issues identified in these previous reports. Furthermore, it is the City's desire to convert the existing facility to a conventional activated sludge secondary treatment plant to meet the projected flows and loadings for a 20-year design horizon.

The objectives of the design team are to:

- Provide a complete operation system to meet the needs of the community and also to address the specific characteristics of its location;

- Provide a simple operational design with features suited to the community and avoid processes or equipment that require highly specialized technical skills or sophisticated maintenance procedures;
- Maximize the re-use and integration of salvageable components within the existing facility; and
- Minimize life cycle costs of the facility.

3.3 New Process Description

Phase 1 incorporates only the headworks ("preliminary treatment") of the new WWTP. The new headworks building houses the following components for Preliminary Treatment:

- New influent pumping;
- Relocate the existing screw screens;
- New fine screening equipment;
- New valves; and
- New PLC-based control.

3.4 New Building (General)

The new building has been constructed to the current building code, and to good northern engineering practices. The new building foundation is set on rock socket piles with lengths varying up to 7m long. The new building consists of an upper and lower level. There are also two new rooms in the existing building one is the electrical room and the new lab.

3.4.1 New Building Lower Floor

The lower floor consists of a concrete slab covering a bituminous damp proofing, 100mm Rigid insulation. The concrete slab is 150mm thick on top of a compacted fill.

3.4.2 New Building Upper Floor

The upper floor consists of 150mm thick concrete slab, with grating covering the channels and the hole to the sludge hopper.

3.4.3 Lower Wall Construction

The lower wall assembly consists of a concrete wall that supports the upper floor. On the exterior of the concrete wall is attached bituminous damp proofing, 100mm rigid insulation and finally cement board.

3.4.4 Upper Wall Construction

The upper wall assembly consists of a prefinished metal liner; notched Z bar sub grit, the cavity is filled with a semi rigid insulation, weather barrier and a prefinished metal siding.

3.4.5 New Building Interior Wall Construction

The interior wall has a 1 hour fire rating and is constructed of 15.9mm 'Densarmour' Densguard Fireguard, 91mm steel studs 400mm on center and 15.9mm 'Densarmour' Densguard Fireguard.

3.4.6 New Building Roof Construction

The new building roof assembly consists of a prefinished metal liner, 12.7mm exterior grade GWB, a thermal barrier, an air/vapour barrier, 2 layers of 100mm rigid insulation with Zgrit and finally prefinished sheet metal roofing.

3.4.7 New Electrical Room Construction

The three new electrical room wall assemblies are constructed of two types one with a 1 hour fire rating and is constructed of 15.9mm 'Densarmour' Densguard Fireguard, 38x89mm wood studs 400mm on center, 9.5mm plywood backing on the electrical room side and 15.9mm 'Densarmour' Densguard Fireguard, the other two new walls are fire rated for 1 hour and is constructed of 15.9mm 'Densarmour' Densguard Fireguard, 91mm steel studs 400mm on center and 15.9mm 'Densarmour' Densguard Fireguard.

3.4.8 New Lab Room Construction

The new Lab walls are constructed of three different types of assemblies. The one wall is common with the new electrical room which is fire rated for 1 hour and is constructed of 15.9mm 'Densarmour' Densguard Fireguard, 91mm steel studs 400mm on center and 15.9mm 'Densarmour' Densguard Fireguard, one of the other walls is common with the existing washroom and constructed of 12.7mm 'Densarmour' Densguard, 152mm steel studs 400mm on center and 12.7mm 'Densarmour' Densguard. The last wall is constructed of 12.7mm 'Densarmour' Densguard, 91mm steel studs 400mm on center and 12.7mm 'Densarmour' Densguard. The new lab also has new cabinets for the storage of the laboratory equipment.

3.4.9 Doors and Stairs

The doors are fire rated in fire rated walls and regular doors in non fire rated walls, there are two new overhead doors are installed for access to the lower floor in the new headworks building and the second floor for installation of equipment onto the second floor in phase 2. The new stairs are galvanized for access from the lower headworks floor to the upper headworks floor and another from the upper headworks floor to the second floor in the existing building as well as the exterior access to the second floor of the existing building.

END OF CHAPTER 3

Chapter 4

SCHEMATICS AND FUNCTIONAL DATA

4.1 General

This Section is Not Applicable.

END OF CHAPTER 4

Chapter 5

COMPONENT DETAILS

5.1 General Overview

This Section is Not Applicable.

END OF CHAPTER 5

Chapter 6

OPERATING PROCEDURES

6.1 General

This Section is Not Applicable.

END OF CHAPTER 6

Chapter 7

MAINTENANCE

7.1 General Maintenance

To ensure uninterrupted use, equipment should be regularly inspected, tested, and proper repairs made and recorded. The objective is to minimize equipment operating problems and prevent failures by making minor or necessary repairs before major difficulties occur. The importance of record keeping cannot be over-emphasized. Good maintenance protects the owner's interest with manufacturer warranties, continuity, or maintenance despite staff turnovers and equipment reliability track record.

Environmental and operating conditions are key elements affecting proper and reliable operation of equipment. Costly repairs can be minimized if the following items are attended to:

KEEP IT CLEAN

KEEP IT TIGHT

7.2 Keep it Clean

Day-to day accumulation of normal atmospheric particles, lint, metallic particles form mechanical equipment cause problems with equipment over a long period of time. An accumulation affects equipment reliability and operating life. ALL equipment should be regularly cleaned.

7.3 Keep it Tight

All contactors and control devices operate with high speed movement. This motion creates vibration that can loosen hardware and other parts. External vibration from equipment may cause the loosening of hardware and connections in any equipment. All hardware and connections should be tightened regularly. This simple procedure takes only a small amount of time and can save hours of searching for intermittent problems.

All rotating equipment such as motors are affected by vibrations. This can cause alignment problems, which can result in bearing failures.

7.4 Renewal Parts

Availability of parts can be a major problem these days as distributors are keeping very low inventories in a move to economize. This may make any part a long delivery item. For this reason local distributors should be contacted and parts availability assessed.

Any critical part affecting the reliability of the system should be ordered, recorded and stored by the maintenance department.

7.5 Parts and Equipment Ordering Procedure

During the first year of operation, the Contractor should be contacted for any replacement parts required. This will ensure that parts covered by warranty will be replaced under warranty. Failure to contact the Contractor may result in difficulties in obtaining warranty replacement.

Following the first year of operation, it is recommended that the Contractor also be contacted as many of the suppliers have a wholesale only policy. If it is necessary to purchase parts directly from the original supplier, the following information is required.

- **Make**
- **Model No.**
- **Year of Installation**
- **Installing Contractor**
- **Description of Part Required (i.e. Fan Bearing)**
- **Part No. if Available.**

When quoting a part number contained in manufacturer’s catalogue, always provide the date of the catalogue you are referring to, as these numbers are often subject to change. The equipment supplier will have the latest edition of the manufacturer's catalogue.

If the original supplier is no longer in business, contact the contractor who will be able to suggest an alternate source of supply.

7.6 Scheduled Preventative Maintenance

See the manufacturer's data in Chapter 9 to see what items require regular maintenance.

END OF CHAPTER 7

Chapter 8

TESTING AND CERTIFICATION DATA

8.1 General

Re: 75360 - 08

Trow Associates Inc.
154 Colonnade Road South
Ottawa, Ontario K2E 7J5
Telephone: (613) 225-9940
Facsimile: (613) 225-7337
E-mail: ottawa@trow.com
Web Site: www.trow.com

EARTH TECH
A TETRA TECH INTERNATIONAL LTD. COMPANY
AUG 16 2005
Edmonton, AB

GAP

Reference: OTGE00017181B

August 12, 2005

Mr. Glen Prosko, P.Eng.
Earth Tech (Canada) Inc.
17203 – 103 Avenue
Edmonton, AB T5S 1J4

Dgk Message 05/08/16

Via Facsimile:
(780) 488-2121

Piling Supervision
Waste Water Treatment Plant, Phase I
City of Iqaluit, Nunavut

Dear Mr. Prosko:

We have now completed the installation of the piles on the above site. This work was authorized by you on July 11, 2005.

Installation of the piles on the site was undertaken between July 16, 2005 and July 26, 2005. A total of 32 piles were installed on the site. Each pile consisted of HSS 168 x 6.4 open ended steel pipe. The piles were installed in a 230 mm diameter pre drilled hole which extended a minimum of 2000 mm into the bedrock. The base of the hole was then cleaned and the hole filled with fast setting concrete grout. The open ended steel pipe was then vibrated into the grout to ensure that it is seated on bedrock. Reinforcing steel was then placed in the pipe. The portion of the pile that projected above the ground surface was wrapped with two layers of 6 mil poly prior to backfilling.

The annual space between the pipe and the drilled hole was filled with sand slurry after the grout had set. The top of the pile was filled with dry cuttings.

Attached summary sheets give the relevant data for each pile including pile number, length of the pile from cut off to tip, ground surface elevation, top of bedrock elevation and pile tip elevation. A review of this summary indicates that a total of 191.486 linear metres of piling was installed on the project. The pile numbering system is shown on the attached Drawing I. Individual pile installation records and daily field reports have also been attached for your records.

We trust that this information is satisfactory for your purposes. Should you have any questions, please contact this office.

Yours truly,

Trow Associates Inc.

Surinder K. Aggarwal, M.Sc., P.Eng.
Principal Geotechnical Engineer
Assistant Branch Manager

Ismail M. Taki, M.Eng., P.Eng.
Manager
Geotechnical & Materials Testing Services

Enclosures

Trow Associates Inc.
154 Colonnade Road South. Ottawa
Ontario K2E 7J5
Tel.: (613) 225-9940
Fax: (613) 225-7337

Piling Summary Report

Project No: OTGE00017181B **Date** July 24, 2005

Project Name Waste Water Treatment Plant, Phase I, Iqaluit

Pile No.	Pile Length C/o to Tip	Elevation at Ground Level	Top of Bedrock	Tip of Pile Elevation	Final Location	% Plumb	Comments
1	7.297	7.6	3.902	1.703	on centre	within tolerance	
2	5.985	7.6	5.162	3.015	on centre	within tolerance	
3	4.851	7.63	6.43	4.149	on centre	within tolerance	
4	4.912	7.6	6.4	4.088	55mm S of centre	within tolerance	gusset
5	5.421	7.6	5.771	3.579	on centre	within tolerance	
6	5.696	7.825	5.691	3.304	60mm N of centre	within tolerance	gusset
7	5.377	8.05	5.916	3.623	50mm N of centre	within tolerance	gusset
8	6.662	8.03	4.677	2.338	90mm E of centre	within tolerance	gusset
9	7.200	8	4.038	1.8	60mm E of centre	within tolerance	gusset
10	5.650	7.9	5.462	3.35	25mm E of centre	within tolerance	
11	5.712	7.9	5.462	3.288	on centre	within tolerance	
12	5.361	7.9	5.766	3.639	on centre	within tolerance	
13	6.340	7.95	4.902	2.66	on centre	within tolerance	
14	5.670	8.05	5.612	3.33	190mm N of centre	within tolerance	18" x 12" x 1/2 plate gusset
15	4.625	7.76	6.76	4.375	70mm N of centre	within tolerance	gusset
16	3.856	7.73	7.58	5.144	on centre	within tolerance	
17	5.850	7.8	5.362	3.15	on centre	within tolerance	
18	7.758	7.75	3.483	1.242	25mm W of centre	within tolerance	gusset
19	8.749	7.7	2.518	0.251	on centre	within tolerance	
20	8.553	7.7	2.823	0.447	on centre	within tolerance	
21	5.998	7.62	5.212	3.002	on centre	within tolerance	
22	5.280	7.625	6.101	3.72	on centre	within tolerance	
23	6.997	7.9	4.242	2.003	70mm E of centre	within tolerance	gusset
24	8.720	7.7	2.518	0.28	on centre	within tolerance	
25	7.250	7.7	4.042	1.75	65mm W of centre	within tolerance	
26	5.230	7.65	6.126	3.77	on centre	within tolerance	
27	5.675	8.25	8.25	3.825	220mm N of centre	within tolerance	gusset 18" x 12" x 1/2 plate
28	5.044	7.72	7.12	4.456	150mm N of centre	within tolerance	gusset 12" plate
29	4.180	7.53	7.53	5.32	100mm N 11.5cm splice	within tolerance	gusset 14" plate
30	5.288	7.495	6.595	4.212	40mm E of centre	within tolerance	Resurvey, relocated July 26/05 & reweldcap plate - gusset
31	5.111	7.54	5.406	3.189	50mm S of centre	within tolerance	gusset
32	5.188	7.51	5.376	3.112	140mm S of centre	within tolerance	gusset 15" plate
Total	191.486						

Notes
* Refer to pile records for additional information

Chapter 9

MANUFACTURER DATA AND SERVICE INFORMATION

9.1 General

TABLE OF CONTENTS

- APPROVED SHOP DRAWINGS

DIVISION 05: METALS
05120 Joist Calculation (Canam)
05120 Structural Steel, Metal Stairs, Handrails, etc.

DIVISION 07: THERMAL & MOISTURE PROTECTION
07465 Preformed Metal Cladding/ Siding

DIVISION 08: DOORS AND WINDOWS
08111 Steel doors and frames & Hardware
08362 Sectional Metal Overhead Doors

DIVISION 9: FINISHES
09652 Resilient Sheet Flooring

ANNEX - Approved Shop drawings

ANNEX 1. Shop drawings - Concrete reinforcement

ANNEX 2. Steel Structure - Erection Drawings

ANNEX 3. Shop drawings - Metal siding and roofing

canam aciers
Une division de Le Groupe Canam Manac Inc.

Project: Iqualuit WWTP Plant Conversion
05/06/30 15:48:53

Project: Iqualuit WWTP Plant Conversion

JOIST CALCULATION ACCORDING TO S16-01 & S136 CODES

Mark.....: J1 (Short Span Warren Continuous, Symmetrical, Parallel, Free ends)

Δ = 996 / 250 = 38

ALL RUNNINGS ARE GIVEN FROM THE LEFT REFERENCE

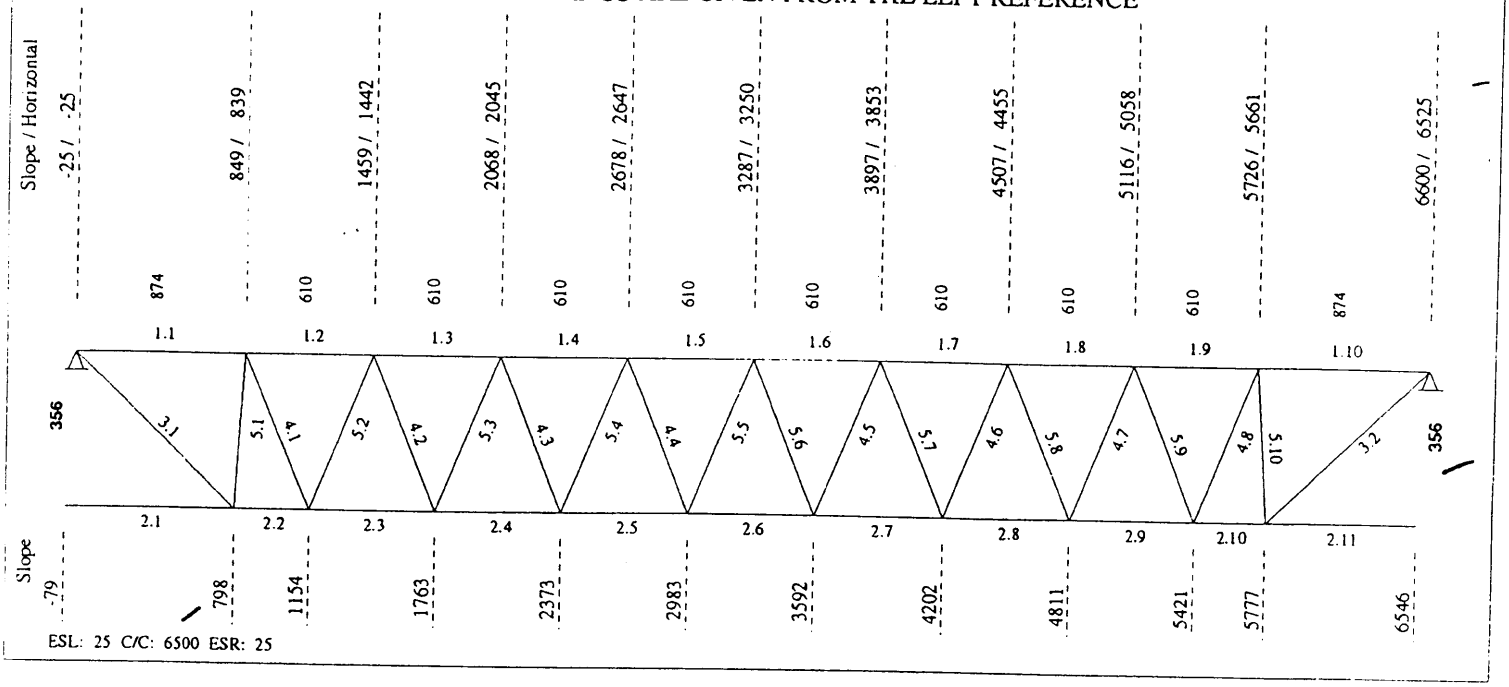

---------- LOADING CONDITIONS ----------
(THE SHOWN VALUES ARE REAL)

DEAD LOAD ....: 2.40 kN/m
1.60 Kn/m^2 x 1.50 m

LIVE LOAD ..: 3.60 kN/m
2.40 Kn/m^2 x 1.50 m

---------- (REAL) DEFLECTION ----------

Allowed deflection under live load	=	27.19 mm (L/ 240)
Calculated deflection under service live load	=	15.54 mm (L/ 415)
Allowed deflection under total load	=	35.83 mm (L/ 180)
Calculated deflection under service total load ...	=	25.90 mm (L/ 249)
Joist inertia	=	25.83 x10^6 mm^4
Required camber	=	13.25 mm

Use of the joist .....: Roof

REVIEWED ACCORDING TO THE REQUIREMENTS OF THE GENERAL CONDITIONS OF THE CONTRACT. ANY ACTION INDICATED IS SUBJECT TO THESE REQUIREMENTS.

- [x] NO EXCEPTIONS TAKEN
- [ ] MAKE NOTED CORRECTIONS
- [ ] REVISE & RESUBMIT
- [ ] REJECTED

DATE NV BY JULY 19/05
EARTH TECH (CANADA) INC.

KUDLIK CONSTRUCTION LTD
P.O. BOX 727, 1519 FEDERAL ROAD
IQUALUIT, NUNAVUT X0A 0H0
PHONE: (867) 979-1166
FAX: (867) 979-1169

7/7/2005.

INGÉNIEUR - ENGINEER
Sébastien Paré
121591
QUÉBEC

05.06.30

canam aciers
Une division de Le Groupe Canam Manac Inc.

Mark: J1

Project: Iqualuit WWTP Plant Conversion

05/06/30 15:48:53

FORCES IN MEMBERS [Kn]

(THE SHOWN FORCES ARE FACTORED)
(Fy = 380 MPa U/N) (Eff. depth = 334.43 mm)

Left Reaction = 27.09/ 0.00 Kn Right Reaction = 27.09/ 0.00 Kn

No	Tension	Compres.		REQUIRED MATERIAL x = tied at mid-length	Slend.	Util.	Length	REQUIRED WELD Eff.Throat-Ea.Side	Remarks
Top Chord									
1.1	0.00	-57.87		LL 1 1/2 x 0.157	z 101	0.97	874		
1.2	0.00	-76.43		do	z 75	0.94	610		
1.3	0.00	-102.99		do	z 75	0.94	do		
1.4	0.00	-120.43	x	do	xx 47	0.77	do		
1.5	0.00	-128.74	x	do	xx 47	0.83	do		
1.6	0.00	-127.93	x	do	xx 47	0.82	do		
1.7	0.00	-118.00	x	do	xx 47	0.76	do		
1.8	0.00	-98.94		do	z 75	0.91	do		
1.9	0.00	-70.76		do	z 75	0.91	610		
1.10	0.00	-50.29		LL 1 1/2 x 0.157	z 101	0.91	874		
Bottom Chord									
2.1	0.00	0.00		LL 1 3/8 x 0.118	z 110	0.43	878		
2.2	57.63	0.00		do	z 47	0.67	356		
2.3	89.56	0.00		do	z 81	0.84	610		
2.4	112.37	0.00		do	z 81	0.95	do		
2.5	126.06	0.00		do	z 81	0.98	do		
2.6	130.62	0.00		do	z 81	0.98	do		
2.7	126.06	0.00		do	z 81	0.98	do		
8	112.37	0.00		do	z 81	0.95	do		
.9	89.56	0.00		do	z 81	0.84	610		
2.10	57.63	0.00		do	z 47	0.67	356		
2.11	0.00	0.00		LL 1 3/8 x 0.118	z 95	0.43	769		
End Diagonal									
3.1	55.93	0.00		BR 5/8 (50W)	z 214	0.91	851	3.00 - 43	
3.2	55.93	0.00		BR 5/8 (50W)	z 214	0.91	851	3.00 - 43	
Diagonal Towards End									
4.1	23.37	0.00		BR 11/16 (50W)	z 107	0.32	469	4.00 - 16	
4.2	17.25	0.00		do	z 107	0.23	do	do	
4.3	11.33	0.00		do	z 107	0.15	do	do	
4.4	5.60	-0.44		do	z 107	0.08	do	do	
4.5	5.60	-0.44		do	z 107	0.08	do	do	
4.6	11.33	0.00		do	z 107	0.15	do	do	
4.7	17.25	0.00		do	z 107	0.23	do	do	
4.8	23.37	0.00		BR 11/16 (50W)	z 107	0.32	469	4.00 - 16	
Diagonal Towards Center									
5.1	0.00	-23.64		BR 5/8 (50W)	z 91	0.93	360	3.00 - 18	
5.2	0.00	-23.37		BR 11/16 (50W)	z 107	0.81	469	4.00 - 16	
5.3	0.00	-17.25		do	z 107	0.60	do	do	
5.4	0.00	-11.33		do	z 107	0.39	do	do	
5.5	0.44	-5.60		do	z 107	0.19	do	do	
5.6	0.44	-5.60		do	z 107	0.19	do	do	
5.7	0.00	-11.33		do	z 107	0.39	do	do	
5.8	0.00	-17.25		do	z 107	0.60	do	do	
5.9	0.00	-23.37		BR 11/16 (50W)	z 107	0.81	469	4.00 - 16	
5.10	0.00	-23.64		BR 5/8 (50W)	z 91	0.93	360	3.00 - 18	

KUDLIK CONSTRUCTION LTD
P.O. BOX 727, 1519 FEDERAL ROAD
IQUALUIT, NUNAVUT X0A 0H0
PHONE: (867) 979-1166
FAX: (867) 979-1169

---------- BRIDGING ----------

Maximum spacing between rows of bridging

				Laterals supports
@ Top Chord:	3824.48	==>	1 Row(s) Minimum	Deck (304.8)
@ Bottom Chord:	5037.36	==>	1 Row(s) Minimum	Acc. to the code

POSITION	@ Top Chord	@ Bottom Chord
	3287.64 (3250)	3287.64 (3250)

V3.6.3.2

Fabrication code unless noted
-LL = 2 angles short legs back to back, BL = 2 angles welded in box, BR = Round bar
-U = 1 U profile, UU = 2 U profiles one inside the other, -CL = Crimped angle
The welding length of web members is calculated according to non continuous joints.
It is shorter for continuous joints.

Projets no.: F03913
67 / 72

Designer: Marianne Berthelot
Area to Paint: 4.48 m2

Shop: Les aciers Canam -- St-Gedeon [Production]
Material Sort: Weight

KUDLIK CONSTRUCTION LTD
P.O. BOX 727, 1519 FEDERAL ROAD
IQUALUIT, NUNAVUT X0A 0H0
PHONE: (867) 979-1166
FAX: (867) 979-1169

canam aciers
Une division de Le Groupe Canam Manac Inc.

Project: Iqualuit WWTP Plant Conversion
05/06/30 15:48:54

Project: Iqualuit WWTP Plant Conversion

JOIST CALCULATION ACCORDING TO S16-01 & S136 CODES

Mark.....: J2 (Short Span Warren Continuous, Symmetrical, Parallel, Free ends)

Δ = 1510 / 250 52

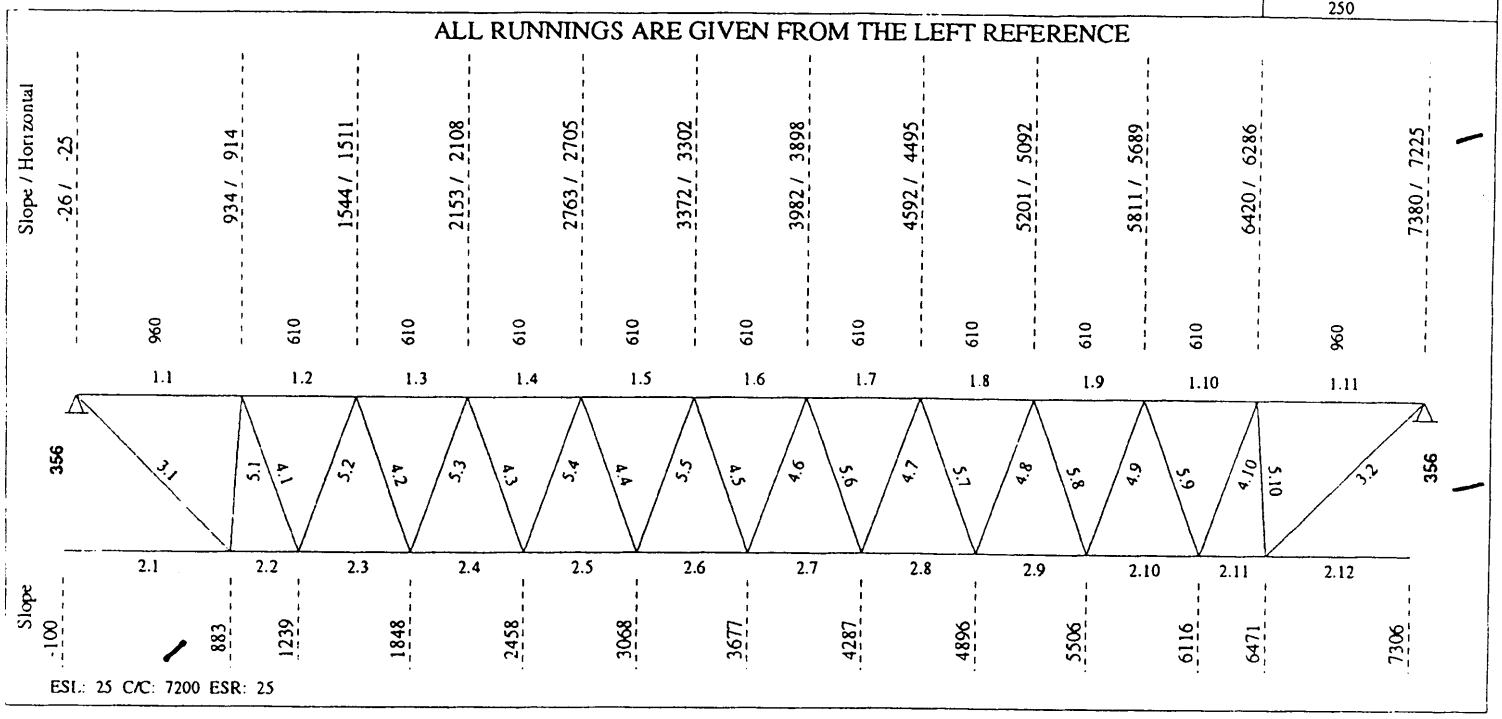

---------- **LOADING CONDITIONS** ----------

(THE SHOWN VALUES ARE REAL)

DEAD LOAD ....: 2.40 kN/m
1.60 Kn/m^2 x 1.50 m

LIVE LOAD ..: 3.60 kN/m
2.40 Kn/m^2 x 1.50 m

---------- **(REAL) DEFLECTION** ----------

Allowed deflection under live load	=	30.44 mm (L/ 240)
Calculated deflection under service live load	=	20.03 mm (L/ 357)
Allowed deflection under total load	=	39.72 mm (L/ 180)
Calculated deflection under service total load ...	=	33.41 mm (L/ 214)
Joist inertia	=	29.32 x10^6 mm^4
Required camber	=	14.81 mm

Use of the joist .....: Roof

KUDLIK CONSTRUCTION LTD
P.O. BOX 727, 1519 FEDERAL ROAD
IQUALUIT, NUNAVUT X0A 0H0
PHONE: (867) 979-1166
FAX: (867) 979-1169

INGÉNIEUR - ENGINEER
Sébastien Paré
121591
QUÉBEC

05-06-30

Mark: J2

Project: Iqualuit WWTP Plant Conversion

05/06/30 15:48:54

FORCES IN MEMBERS [Kn]

(THE SHOWN FORCES ARE FACTORED)
(Fy = 380 MPa U/N) (Eff. depth = 332.06 mm)

Left Reaction = 30.03/ 0.00 Kn Right Reaction = 30.03/ 0.00 Kn

No	Tension	Compres.		REQUIRED MATERIAL x = tied at mid-length	Slend.	Util.	Length	REQUIRED WELD Eff.Throat-Ea.Side	Remarks
Top Chord									
1.1	0.00	-72.24	x	LL 1 5/8 x 0.157	xx 64	0.98	960		
1.2	0.00	-92.84		do	z 69	0.98	610		
1.3	0.00	-123.27		do	z 69	0.95	do		
1.4	0.00	-144.70	x	do	xx 43	0.82	do		
1.5	0.00	-157.12	x	do	xx 43	0.89	do		
1.6	0.00	-160.53	x	do	xx 43	0.91	do		
1.7	0.00	-154.93	x	do	xx 43	0.88	do		
1.8	0.00	-140.32	x	do	xx 43	0.80	do		
1.9	0.00	-116.70		do	z 69	0.90	do		
1.10	0.00	-84.07		do	z 69	0.94	610		
1.11	0.00	-60.75		LL 1 5/8 x 0.157	z 103	0.95	960		
Bottom Chord									
2.1	0.00	0.00		LL 1 5/8 x 0.118	z 104	0.44	983		
2.2	70.43	0.00		do	z 40	0.67	356		
2.3	106.47	0.00		do	z 68	0.84	610		
2.4	133.50	0.00		do	z 68	0.95	do		
2.5	151.52	0.00		do	z 68	1.01	do		
2.6	160.53	0.00		do	z 68	1.01	do		
2.7	160.53	0.00		do	z 68	1.01	do		
2.8	151.52	0.00		do	z 68	1.01	do		
2.9	133.50	0.00		do	z 68	0.95	do		
2.10	106.47	0.00		do	z 68	0.84	610		
2.11	70.43	0.00		do	z 40	0.67	356		
2.12	0.00	0.00		LL 1 5/8 x 0.118	z 87	0.44	835		
End Diagonal									
3.1	67.15	0.00		BR 11/16 (50W)	z 213	0.90	929	4.00 - 39	
3.2	67.15	0.00		BR 11/16 (50W)	z 213	0.90	929	4.00 - 39	
Diagonal Towards End									
4.1	26.16	0.00		BR 11/16 (50W)	z 107	0.35	469	4.00 - 16	
4.2	20.14	0.00		do	z 107	0.27	do	do	
4.3	14.28	0.00		do	z 107	0.19	do	do	
4.4	8.60	0.00		do	z 107	0.12	do	do	
4.5	3.09	-3.09		do	z 107	0.11	do	do	
4.6	3.09	-3.09		do	z 107	0.11	do	do	
4.7	8.60	0.00		do	z 107	0.12	do	do	
4.8	14.28	0.00		do	z 107	0.19	do	do	
4.9	20.14	0.00		do	z 107	0.27	do	do	
4.10	26.16	0.00		BR 11/16 (50W)	z 107	0.35	469	4.00 - 16	
Diagonal Towards Center									
5.1	0.00	-26.00		BR 11/16 (50W)	z 82	0.76	360	4.00 - 16	
5.2	0.00	-26.16		do	z 107	0.91	469	do	
5.3	0.00	-20.14		do	z 107	0.70	do	do	
5.4	0.00	-14.28		do	z 107	0.50	do	do	
5.5	0.00	-8.60		do	z 107	0.30	do	do	
5.6	0.00	-8.60		do	z 107	0.30	do	do	
5.7	0.00	-14.28		do	z 107	0.50	do	do	
5.8	0.00	-20.14		do	z 107	0.70	do	do	
5.9	0.00	-26.16		do	z 107	0.91	469	do	
5.10	0.00	-26.00		BR 11/16 (50W)	z 82	0.76	360	4.00 - 16	

KUDLIK CONSTRUCTION LTD
P.O. BOX 727, 1519 FEDERAL ROAD
IQUALUIT, NUNAVUT X0A 0H0
PHONE: (867) 979-1166
FAX: (867) 979-1169

BRIDGING

Maximum spacing between rows of bridging

				Laterals supports
@ Top Chord:	4145.19	==>	1 Row(s) Minimum	Deck (304.8)
@ Bottom Chord:	5781.3	==>	1 Row(s) Minimum	Acc. to the code

POSITION	@ Top Chord	@ Bottom Chord
	3677.83 (3601)	3677.83 (3601)

V3.6.3.2

Fabrication code unless noted

-LL = 2 angles short legs back to back, BL = 2 angles welded in box, BR = Round bar
-U = 1 U profile, UU = 2 U profiles one inside the other, -CL = Crimped angle

The welding length of web members is calculated according to non continuous joints.
It is shorter for continuous joints.

Projets no.: F03913
83 / 88

Designer: Marianne Berthelot
Area to Paint: 5.55 m2

Shop: Les aciers Canam -- St-Gedeon [Production]
Material Sort: Weight

KUDLIK CONSTRUCTION LTD
P.O. BOX 727, 1519 FEDERAL ROAD
IQUALUIT, NUNAVUT X0A 0H0
PHONE: (867) 979-1166
FAX: (867) 979-1169

KUDLIK CONSTRUCTION LTD
P.O. BOX 727, 1519 FEDERAL ROAD
IQUALUIT, NUNAVUT X0A 0H0
PHONE: (867) 979-1166
FAX: (867) 979-1169

NORTH

HSS 102x102x6.4 STRUT BRACE

356 DEEP OWSJ

C250 X 23

W460 X 68

38 X 0.76 GALVANIZED METAL DECK TYPICAL

J1

J2

ROOF FRAMING PLAN
1:50

PL20 X 150 X 225 BASE WITH 2-19 DIA. ANCHOR BOLTS

TOP OF CURB EL. 14.100

DETAIL A
S132 1:20

PL20 X 150 X 300 BASE WITH 2-19 DIA. ANCHOR BOLTS

DETAIL B
S132 1:20

TOP OF SLAB EL. 13.900

TOP OF CURB EL. 14.100

DETAIL C
S132 1:20

DETAIL D
S132 1:20

OUTSIDE FACE CONCRETE

COLUMN CENTER LINE

SLOTTED CONNECTION IN HSS

PL12 X 150 X 500 EMBED INTO SLAB C/W 6-10 DIA. X 100 LONG NELSON STUDS

HSS STRUT SEE ELEVATION

PL12 X 200 X 500 GUSSET WELDED TO EMBED PLATE

DETAIL E
S132 1:15

HEADWORKS EAST ELEVATION
1:75

HSS 102 X 102 X 6.4

CFC 250 X 88 X 3.4 GIRTS

TOP OF BEAM EL. 18.900

TOP OF BEAM EL. 17.400

TOP OF CURB EL. 14.100

HEADWORKS NORTH ELEVATION
1:75

SEE MECHANICAL FOR OPENINGS

MANDOOR

HEADWORKS SOUTH ELEVATION
1:75

TOP OF BEAM EL. 17.800

REMOVEABLE PANEL

TOP OF SLAB EL. 13.800

2-20M EACH FACE TYPICAL

1-15M X 1200 LG TYPICAL EACH CORNER

OVERHEAD DOOR

1-15M EACH FACE AT OPENING EDGE TYPICAL

RECEIVED
2005
CANAM ST-GIDEON
FORMS

EarthTech
A Tyco International Ltd. Company
17203-103rd Avenue
EDMONTON, ALBERTA
T5S 1J4 CANADA
Tel. 780-486-6800
Fax. 780-488-2121
www.earthtech.ca

PERMIT TO PRACTICE
EARTH TECH (CANADA) INC.
Signature R.J. GILLIS
Date 2005-03-04
PERMIT NUMBER: P 005
The Association of Professional Engineers, Geologists and Geophysicists of the NWT/NU

Stamp
PROFESSIONAL ENGINEER
ORIGINALLY SIGNED BY R.J. GILLIS
2005-03-04

No.	Date	Description
1	2005 08/14	ISSUED FOR CONSTRUCTION
0	2005 03/04	ISSUED FOR TENDER

REVISIONS

Iqaluit
CITY of IQALUIT,
Nunavut

Design
Drawn NV
Approved
Checked

Project Title
CITY OF IQALUIT
WASTEWATER
TREATMENT PLANT
PHASE 1

Drawing Title
STRUCTURAL ROOF FRAMING

Scale AS NOTED
Project No. 75360
Date 08.03.05
Drawing No. S133
Revision 1

LAST SAVED: 15/8/2005 9:00 AM
L:\work\75000\75360\02a-CAD\CAD\Issued\2005.08.14 Phase 1 Construction\Work\S133.dwg

CERTIFIÉ ISO 9002

DIV	GRID LOC.	ELEV.
1	A'/1'-3'	+17.400
1	A'/3'-5'	+17.400

REVIEWED ACCORDING TO THE REQUIREMENTS OF THE GENERAL CONDITIONS OF THE CONTRACT. ANY ACTION INDICATED IS SUBJECT TO THESE REQUIREMENTS.

☑ NO EXCEPTIONS TAKEN
☐ MAKE NOTED CORRECTIONS
☐ REVISE & RESUBMIT
☐ REJECTED

DATE JUL 11 2005 BY RR
EARTH TECH (CANADA) INC.

KUDLIK CONSTRUCTION LTD
P.O. BOX 727, 1519 FEDERAL ROAD
IQUALUIT, NUNAVUT X0A 0H0
PHONE: (867) 979-1166
FAX: (867) 979-1169

05/07/2005

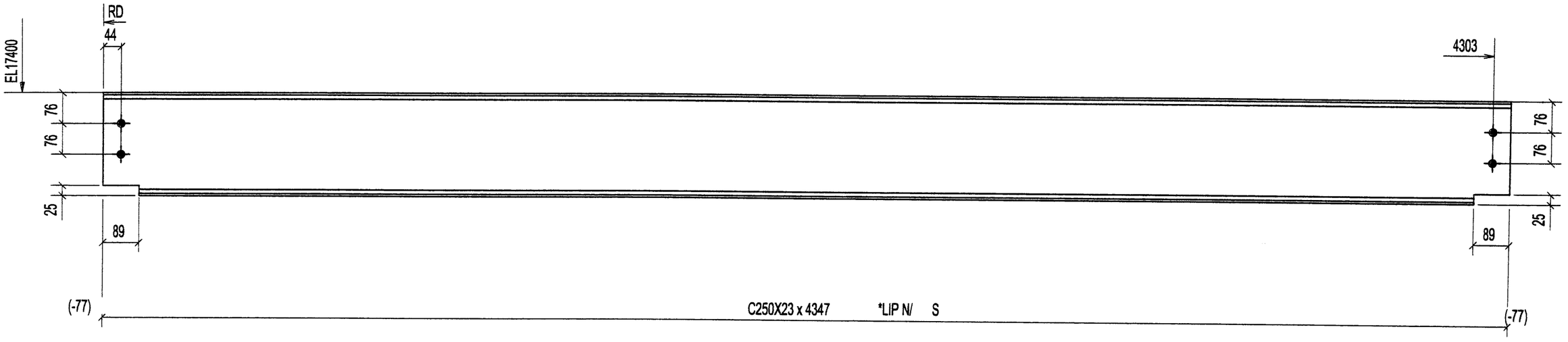

2 - BEAM - B1000

QTE	DESCRIPTION
BOULONS DE CHANTIER	

QTE	MARQUE	DESCRIPTION	LONG.	REMARKS
2	B1000	BEAM		
2	B1000	C250X23	4347	

QUEBEC METAL
930, DE L'ÉGLISE,
ST-ROMUALD,
QUÉBEC, G6W 5M6
Tel.:(418) 839-3969
Fax:(418) 839-3810
www.quebecmetal.com

REV.	DESCRIPTION	DATE	PAR
0	FOR APPROVAL	29-06-05	

TROUS	PEINTURE	ACIER
13/16 Ø U/N	GALVANIZED	300W U/N

DESSINER PAR	VÉRIFIER PAR	REV.
A.P. 06/29/2005	B.P.	0

PROJET: W.W.T IQUALUIT

DIV.	CONTRAT	
E001	C2005-42	B1000

DIV	GRID LOC.	ELEV.
1	C'/2'-4'	+17.900

CERTIFIÉ ISO 9002

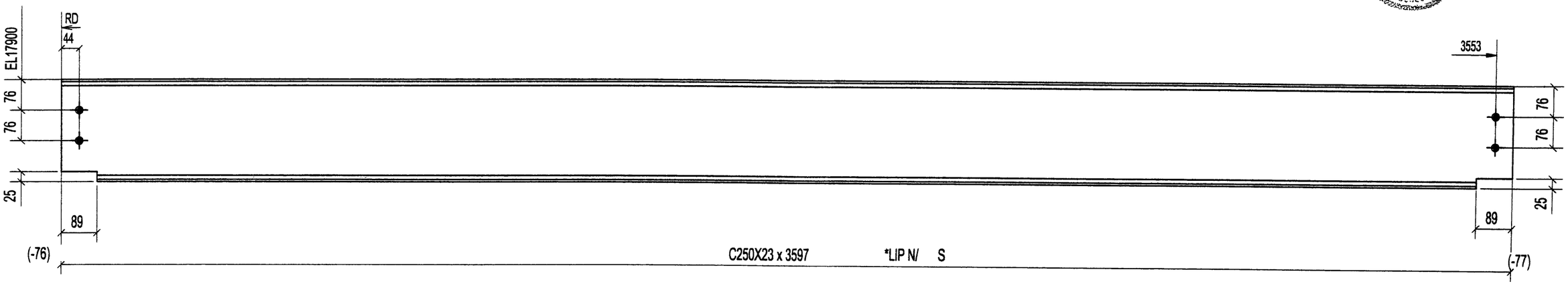

1 - BEAM - B1001

QTE	DESCRIPTION
BOULONS DE CHANTIER	

QTE	MARQUE	DESCRIPTION	LONG.	REMARKS
1	B1001	BEAM		
1	B1001	C250X23	3597	

QUÉRO METAL
900, DE L'ÉGLISE,
ST-ROMUALD,
QUÉBEC, G6W 5M6
Tel.:(418) 839-0999
Fax:(418) 839-3810
www.queremetal.com

REV.	DESCRIPTION	DATE	PAR
0	FOR APPROVAL	29-06-05	

TROUS	PEINTURE	ACIER
13/16 Ø U / N	GALVANIZED	300W U/N

DESSINER PAR	VÉRIFIER PAR	REV.
A.P. 06/28/2005	B.P.	0

PROJET: W.W.T IQUALUIT

DIV.	CONTRAT	
E001	C2005-42	B1001

DIV	GRID LOC.	ELEV.
1	B'/1'-5'	+18.900

CERTIFIÉ ISO 9002

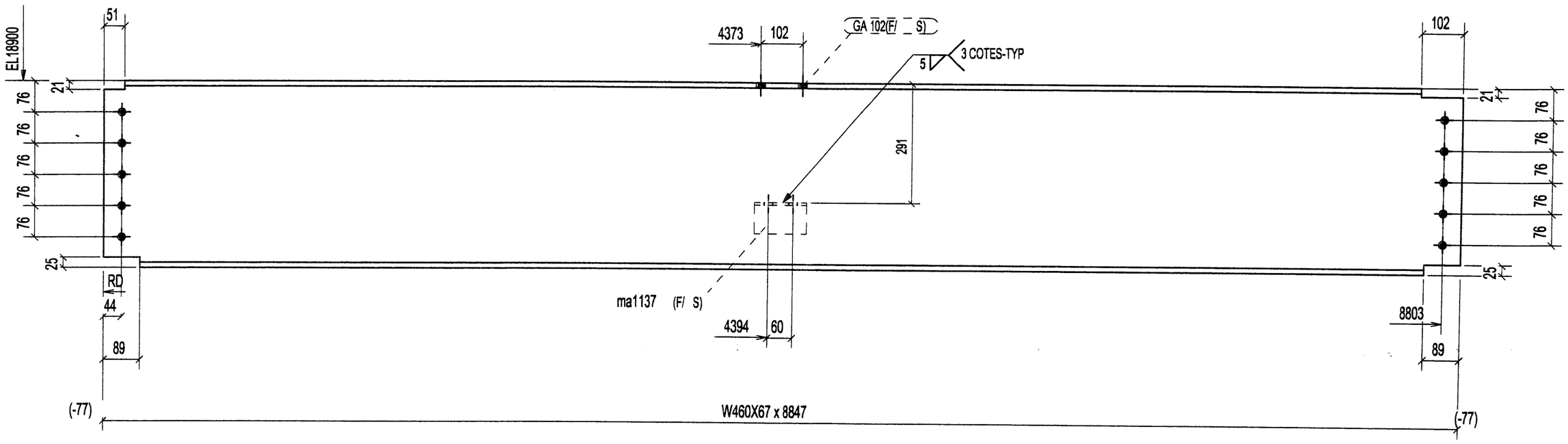

1 - BEAM - B1002

-	BOLT_3/4"DIA_A325_1"3/4
2	BOLT_3/4"DIA_A325_2"
QTE	DESCRIPTION
BOULONS DE CHANTIER	

QTE	MARQUE	DESCRIPTION	LONG.	REMARKS
1	B1002	BEAM		
1	B1002	W460X67	8847	350W
1	ma1137	L102X76X6.4	127	

930, DE L'ÉGLISE,
ST-ROMUALD,
QUÉBEC, G6W 5M6
Tel.:(418) 839-0969
Fax:(418) 839-3810
www.queurometal.com

REV.	DESCRIPTION	DATE	PAR
0	FOR APPROVAL	29-06-05	

TROUS	PEINTURE	ACIER
13/16 Ø U / N	GALVANIZED	300W U/N

DESSINER PAR	VÉRIFIER PAR	REV.
A.P. 06/29/2005	B.P.	0

PROJET: W.W.T IQUALUIT

DIV.	CONTRAT	
E001	C2005-42	B1002

DIV	GRID LOC.	ELEV.
1	A'-B'/4'-5'	+15.485

CERTIFIÉ ISO 9002

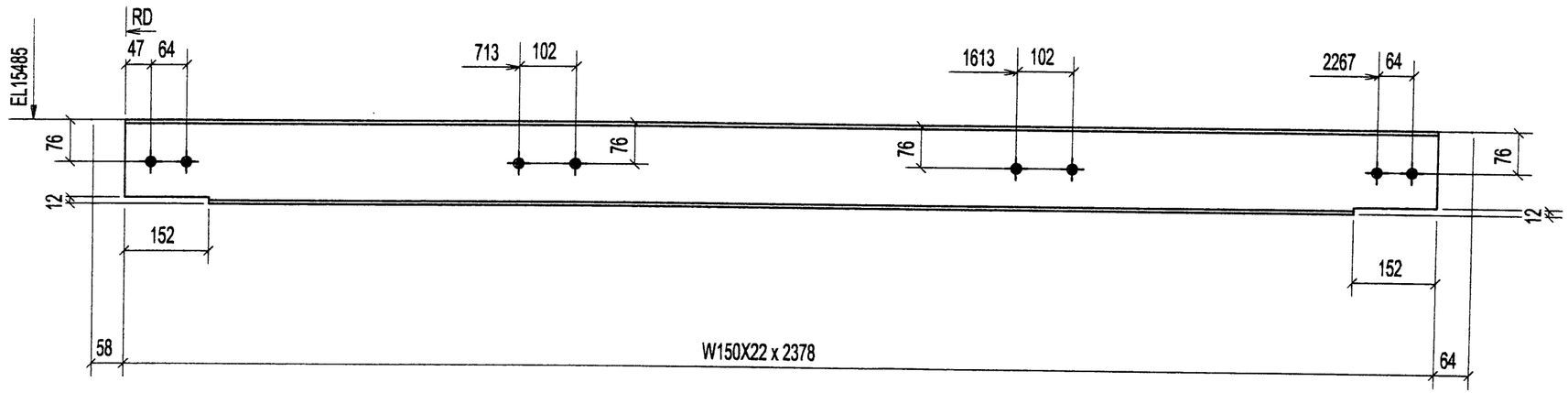

Ingénieur - Engineer
Joël Rhéaume
100724
Québec

1 - BEAM - B1003

QTE	DESCRIPTION
BOULONS DE CHANTIER	

QTE	MARQUE	DESCRIPTION	LONG.	REMARKS
1	B1003	BEAM		
1	B1003	W150X22	2378	350W

QUÉRO METAL
930, DE L'ÉGLISE,
ST-ROMUALD,
QUÉBEC, G6W 5M6
Tél.:(418) 839-0999
Fax:(418) 839-3810
www.querometal.com

REV.	DESCRIPTION	DATE	PAR
0	FOR APPROVAL	29-06-05	

TROUS	PEINTURE	ACIER	
13/16 Ø U / N	GALVANIZED	300W U/N	
DESSINER PAR: A.P. 06/28/2005	VÉRIFIER PAR: B.P.	REV.: 0	

PROJET: W.W.T IQUALUIT

DIV.	CONTRAT	
E001	C2005-42	B1003

DIV	GRID LOC.	ELEV.
1	A'-B'/3'	+15.485

CERTIFIÉ ISO 9002

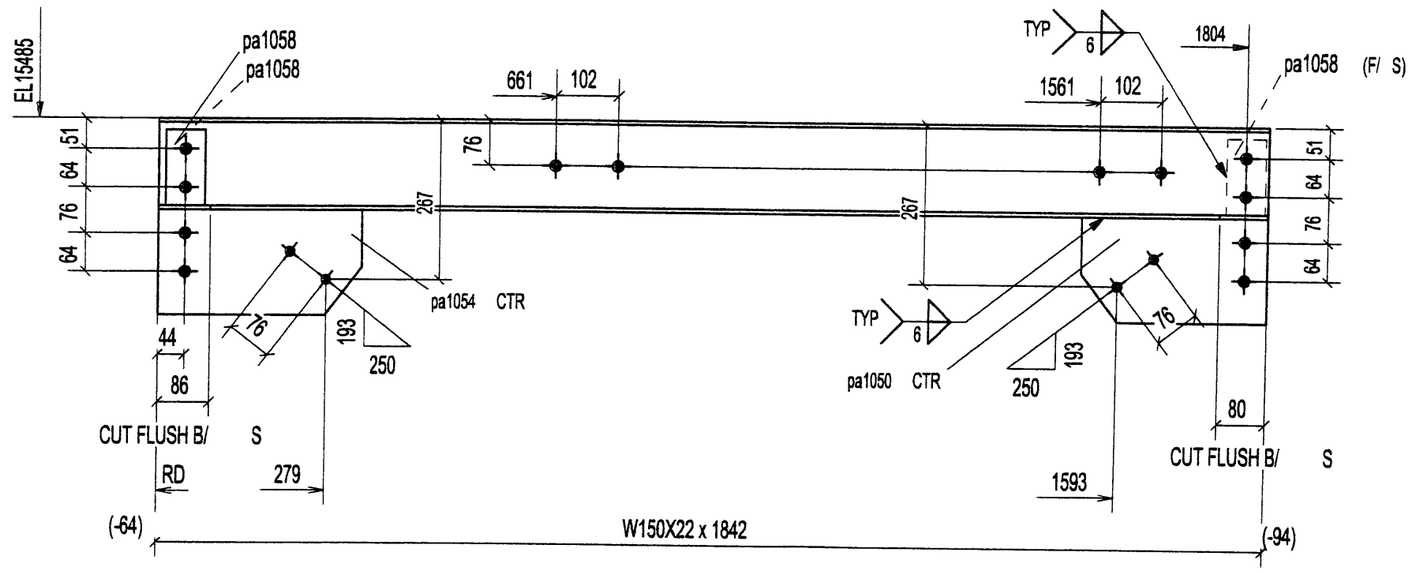

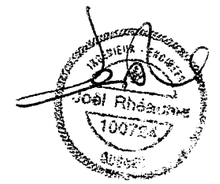

1 - BEAM - B1004

1	B1004	BEAM			
1	B1004	W150X22	1842	350W	
1	pa1050	PL10X174.6	309		
1	pa1054	PL10X174.6	339		
3	pa1058	PL 2X65	126		
QTE	MARQUE	DESCRIPTION	LONG.	REMARKS	

4	BOLT_3/4"DIA_A325_2"
4	BOLT_5/8"DIA_A325_1"1/2
QTE	DESCRIPTION
BOULONS DE CHANTIER	

QUERO METAL
300, DE L'ÉGLISE,
ST-ROMUALD,
QUÉBEC, G6W 5M6
Tel.(418) 839-0999
Fax(418) 839-3810
www.querometal.com

REV.	DESCRIPTION	DATE	PAR
0	FOR APPROVAL	29-06-05	

TROUS	PEINTURE	ACIER
13/16 Ø U / N	GALVANIZED	300W U/N

DESSINER PAR	VÉRIFIER PAR	REV.
A.P. 06/28/2005	B.P.	0

PROJET: W.W.T IQUALUIT

DIV.	CONTRAT	
E001	C2005-42	B1004

DIV	GRID LOC.	ELEV.
1	A'-B'/3'	+15.485

CERTIFIÉ ISO 9002

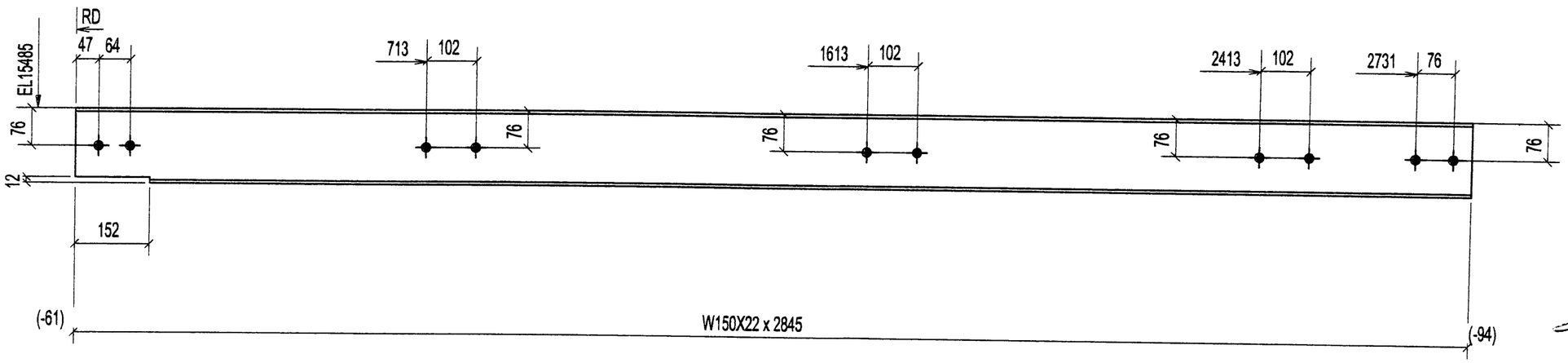

1 - BEAM - B1005

QTE	DESCRIPTION
2	BOLT_3/4"DIA_A325_2"
BOULONS DE CHANTIER	

QTE	MARQUE	DESCRIPTION	LONG.	REMARKS
1	B1005	BEAM		
1	B1005	W150X22	2845	350W

QUÉBEC METAL
930, JE L'ÉGLISE,
ST-ROMUALD,
QUÉBEC, G6W 5M6
Tel.:(418) 839-0959
Fax:(418) 839-3810
www.quebecmetal.com

REV.	DESCRIPTION	DATE	PAR
0	FOR APPROVAL	29-06-05	

TROUS	PEINTURE	ACIER	
13/16 Ø U/N	GALVANIZED	300W U/N	

DESSINER PAR	VÉRIFIER PAR	REV.
A.P. 06/28/2005	S.P.	0

PROJET: W.W.T IQUALUIT

DIV	CONTRAT	
E001	C2005-42	B1005

Joël Rhéaume
100724
QUÉBEC

DIV	GRID LOC.	ELEV.
1	A'-B'/3'-5'	+15.485
1	A'-B'/3'-5'	+15.485
1	A'-B'/3'-5'	+15.485
1	A'-B'/3'-5'	+15.485

CERTIFIÉ ISO 9002

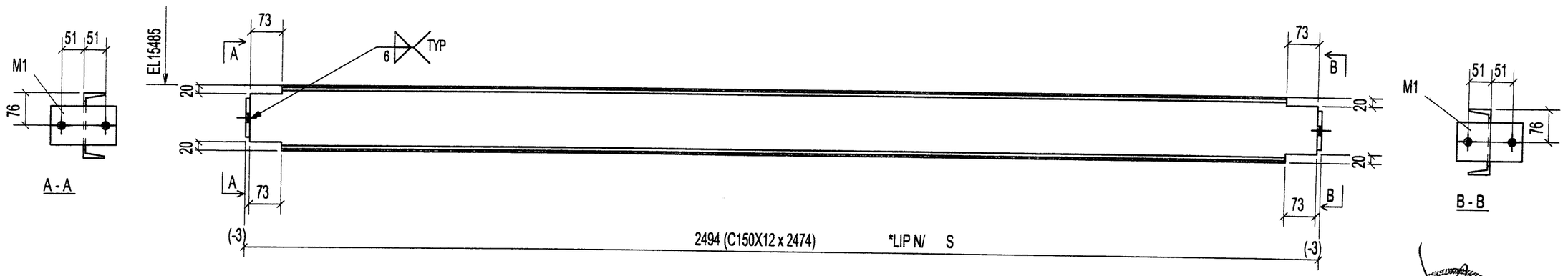

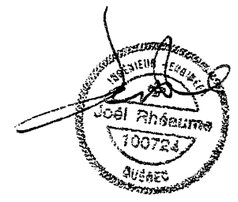

4 - BEAM - B1006

4	BOLT_3/4"DIA_A325_1"3/4
QTE	DESCRIPTION
BOULONS DE CHANTIER	

QTE	MARQUE	DESCRIPTION	LONG.	REMARKS
4	B1006	BEAM		
4	B1006	C150X12	2474	
8	M1	PL10X90	152	

QUERO METAL
930, DE L'ÉGLISE,
ST-ROMUALD,
QUÉBEC, G6W 5M6
Tel.:(418) 839-0999
Fax:(418) 839-3810
www.querometal.com

REV.	DESCRIPTION	DATE	PAR
0	FOR APPROVAL	29-06-05	

TROUS	PEINTURE	ACIER	
13/16 Ø U / N	GALVANIZED	300W U/N	
DESSINER PAR: A.P. 06/28/2005	VÉRIFIER PAR: B.P	REV.: 0	

PROJET: W.W.T IQUALUIT

DIV.	CONTRAT	
E001	C2005-42	B1006

CERTIFIÉ ISO 9002

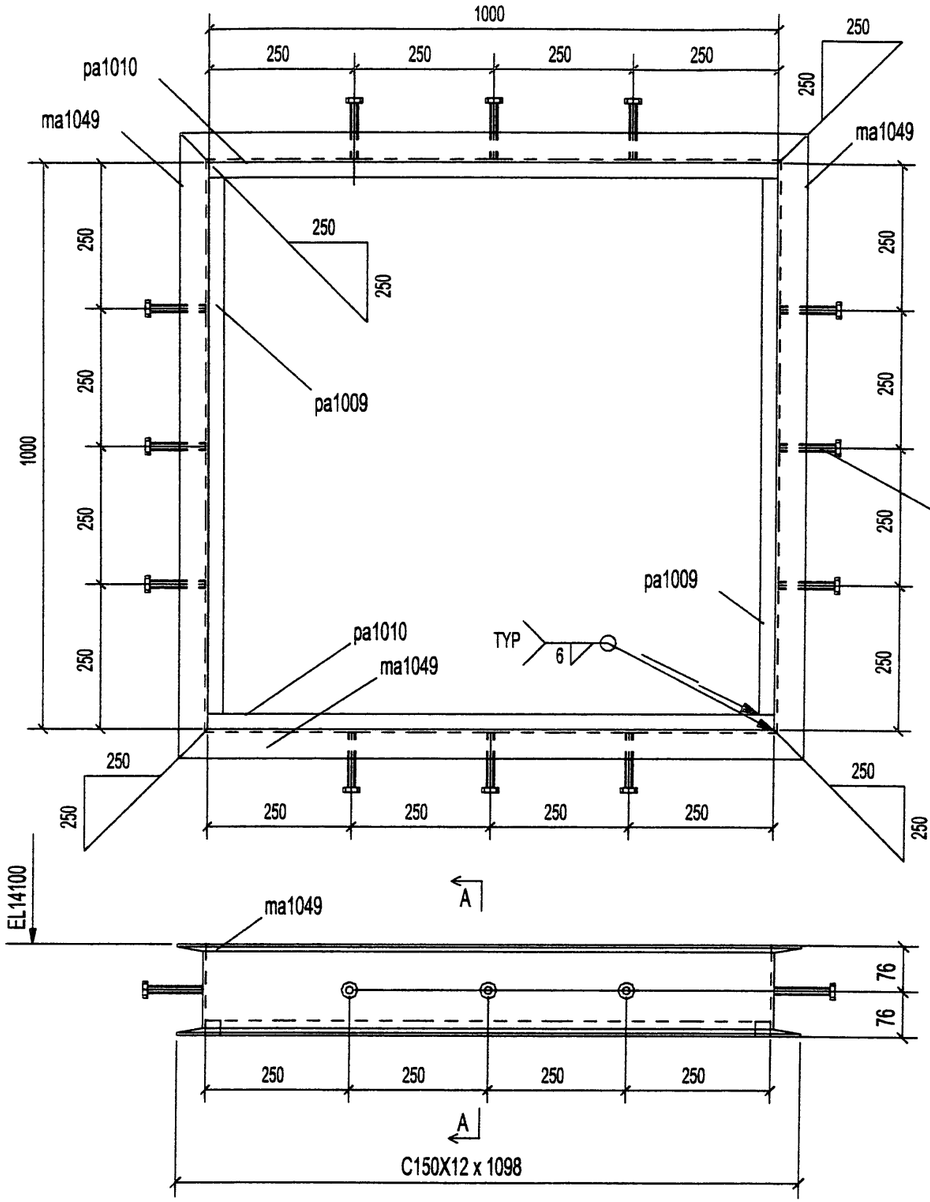

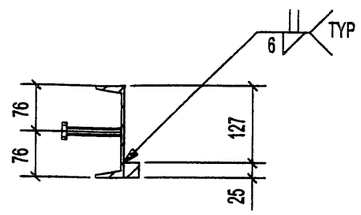

A - A

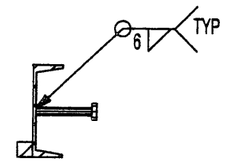

* 12-12 X 100 LONG. NELSON STUDS TO BE PPROVIDED FOR WORKSHOP ASSEMBLY

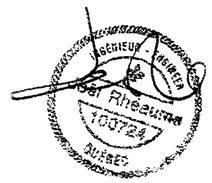

1 - BEAM - B1007

QTE	MARQUE	DESCRIPTION	LONG.	REMARKS
1	B1007	BEAM		
1	B1007	C150X12	1098	
3	ma1049	C150X12	1098	
2	pa1009	FL25X25	950	
2	pa1010	FL25X25	1000	

QTE	DESCRIPTION
BOULONS DE CHANTIER	

QUÉRO METAL
930, DE L'ÉGLISE,
ST-ROMUALD,
QUÉBEC, G6W 5M6
Tel.:(418) 839-0959
Fax:(418) 839-3810
www.querometal.com

REV.	DESCRIPTION	DATE	PAR
0	FOR APPROVAL	27-06-05	

TROUS	PEINTURE	ACIER
13/16 Ø U/N	GALVANIZED	300W U/N

DESSINER PAR	VÉRIFIER PAR	REV.
A.P. 06/23/2005	-	0

PROJET: W.W.T IQUALUIT

DIV.	CONTRAT	
E001	C2005-42	B1007

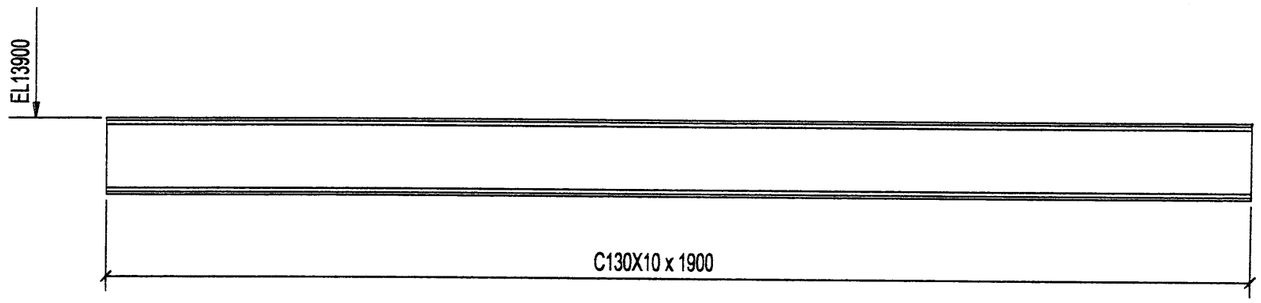

1 - BEAM - B1008

QTE	DESCRIPTION
	BOULONS DE CHANTIER

QTE	MARQUE	DESCRIPTION	LONG.	REMARKS
1	B1008	BEAM		
1	B1008	C130X10	1900	

QUEBEC METAL
330, DE L'ÉGLISE,
ST-ROMUALD,
QUÉBEC, G6W 5M6
Tel.:(418) 839-0999
Fax:(418) 839-3910
www.quebecmetal.com

REV.	DESCRIPTION	DATE	PAR
0	FOR APPROVAL	27-06-05	

TROUS	PEINTURE	ACIER
13/16 Ø U/N	NO PAINT	300W U/N

DESSINER PAR	VÉRIFIER PAR	REV.
A.P. 06/23/2005	-	0

PROJET: W.W.T IQUALUIT

DIV.	CONTRAT	
E001	C2005-42	B1008

CERTIFIÉ ISO 9002

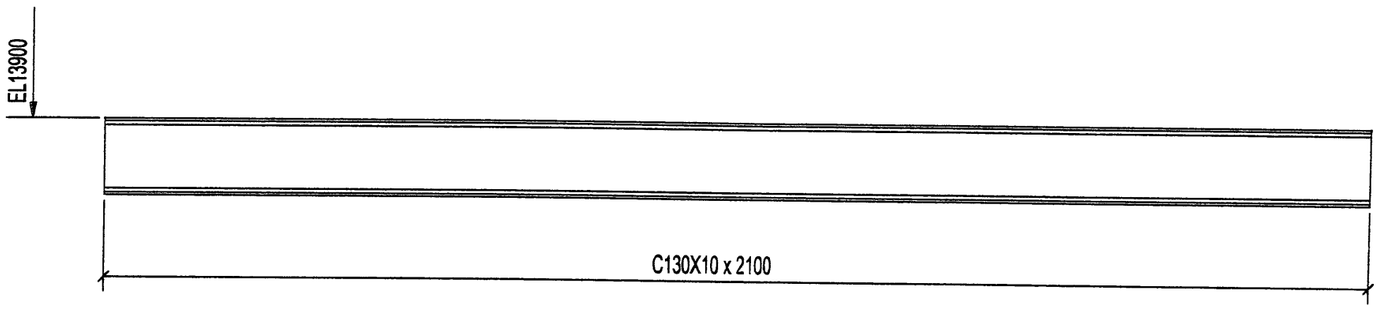

1 - BEAM - B1009

QTE	DESCRIPTION
BOULONS DE CHANTIER	

QTE	MARQUE	DESCRIPTION	LONG.	REMARKS
1	B1009	BEAM		
1	B1009	C130X10	2100	

QUÉBEC METAL
930, DE L'ÉGLISE,
ST-ROMUALD,
QUÉBEC, G6W 5M6
Tel.:(418) 839-0999
Fax:(418) 839-3810
www.quebecmetal.com

REV.	DESCRIPTION	DATE	PAR
0	FOR APPROVAL	27-06-05	

TROUS	PEINTURE	ACIER	
13/16 Ø U / N	NO PAINT	300W U/N	
DESSINER PAR: A.P. 06/23/2005	VÉRIFIER PAR: -	REV.: 0	

PROJET: W.W.T IQUALUIT

DIV.	CONTRAT	
E001	C2005-42	B1009

CERTIFIÉ ISO 9002

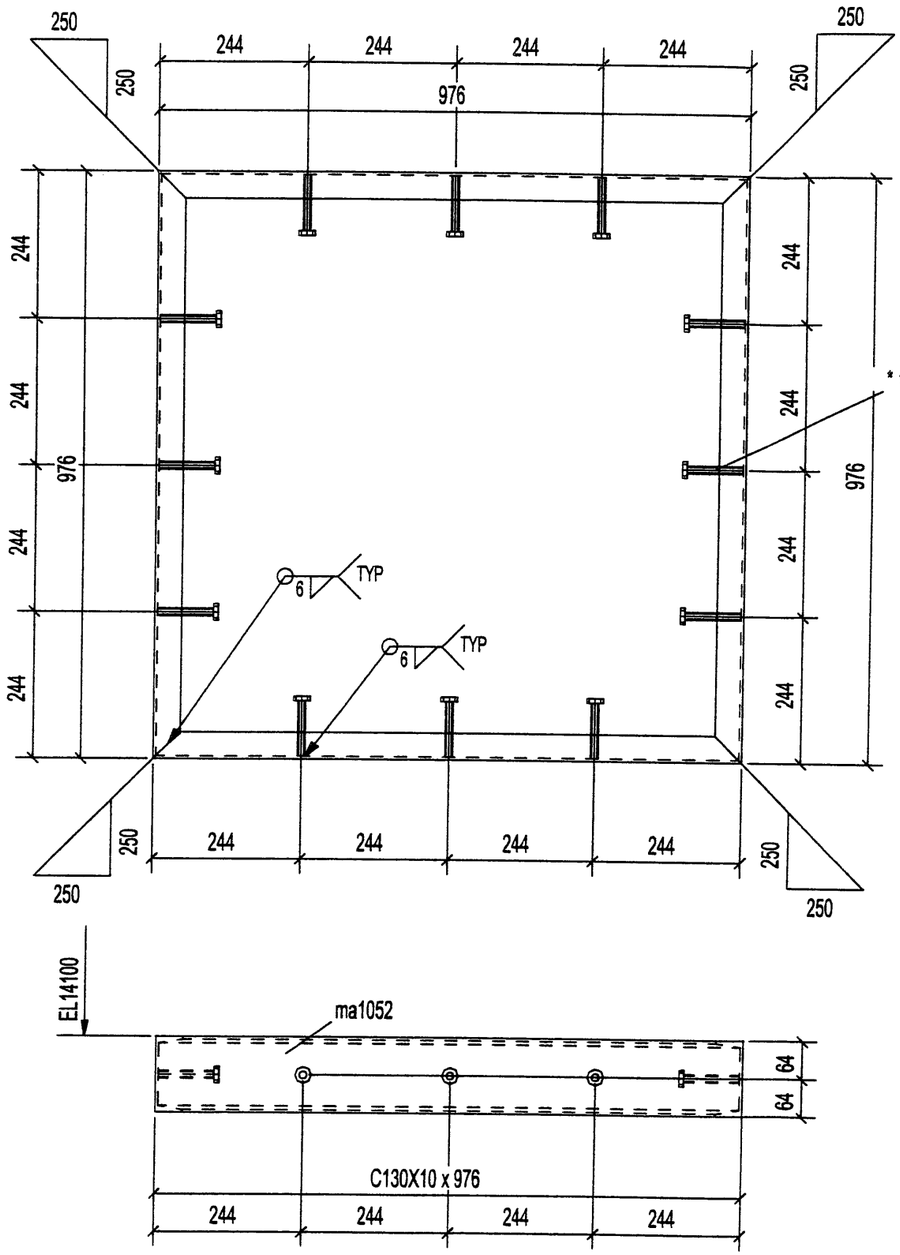

* 12-12 X 100 LONG. NELSON STUDS TO BE PPROVIDED FOR WORKSHOP ASSEMBLY

1 - BEAM - B1010

QTE	DESCRIPTION
BOULONS DE CHANTIER	

QTE	MARQUE	DESCRIPTION	LONG.	REMARKS
1	B1010	BEAM		
1	B1010	C130X10	976	
3	ma1052	C130X10	976	

QUÉBEC METAL
930, DE L'ÉGLISE,
ST-ROMUALD,
QUÉBEC, G6W 5M6
Tel.:(418) 839-0369
Fax:(418) 839-3810
www.quebecmetal.com

REV.	DESCRIPTION	DATE	PAR
0	FOR APPROVAL	27-06-05	

TROUS	PEINTURE	ACIER
13/16 Ø U / N	GALVANIZED	300W U/N

DESSINER PAR	VÉRIFIER PAR	REV.
A.P. 06/23/2005	-	0

PROJET: W.W.T IQUALUIT

DIV.	CONTRAT	
E001	C2005-42	B1010

DIV	GRID LOC.	ELEV.
1	B'/3'-5'	+15.485

CERTIFIÉ ISO 9002

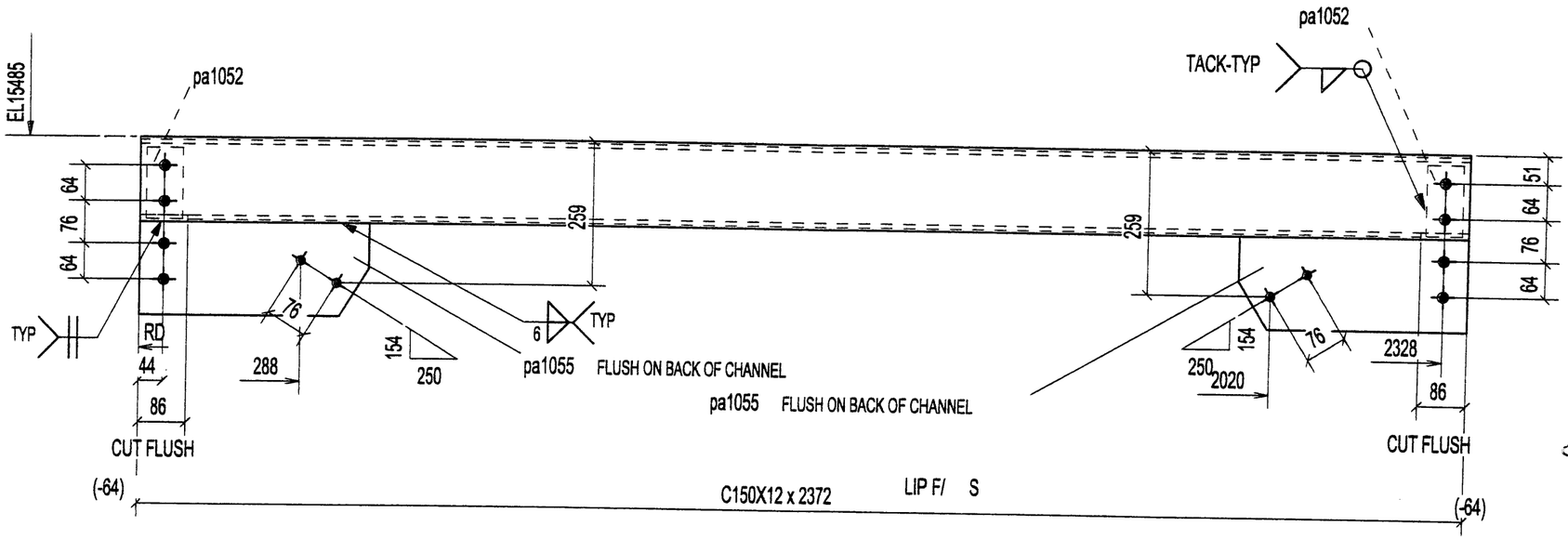

1 - BEAM - B1011

QTE	DESCRIPTION
4	BOLT_3/4"DIA_A325_2"1/4
4	BOLT_5/8"DIA_A325_1"1/2
BOULONS DE CHANTIER	

QTE	MARQUE	DESCRIPTION	LONG.	REMARKS
1	B1011	BEAM		
1	B1011	C150X12	2372	
2	pa1052	PL 4X65	128	
2	pa1055	PL10X166.5	410	

QUÉRO METAL
930, DE L'ÉGLISE,
ST-ROMUALD,
QUÉBEC, G6W 5M6
Tel.:(418) 839-3999
Fax:(418) 839-3810
www.querometal.com

REV.	DESCRIPTION	DATE	PAR
0	FOR APPROVAL	29-06-05	

TROUS	PEINTURE	ACIER
13/16 Ø U/N	GALVANIZED	300W U/N

DESSINER PAR	VÉRIFIER PAR	REV.
A.P. 06/28/2005	B.P.	0

PROJET: W.W.T IQUALUIT

DIV	CONTRAT	
E001	C2005-42	B1011

Joël Rhéaume
100724
QUÉBEC
INGÉNIEURS ERAMA

DIV.	GRID LOC.	ELEV.
1	A'-B'/3'-5'	+15.485

CERTIFIÉ ISO 9002

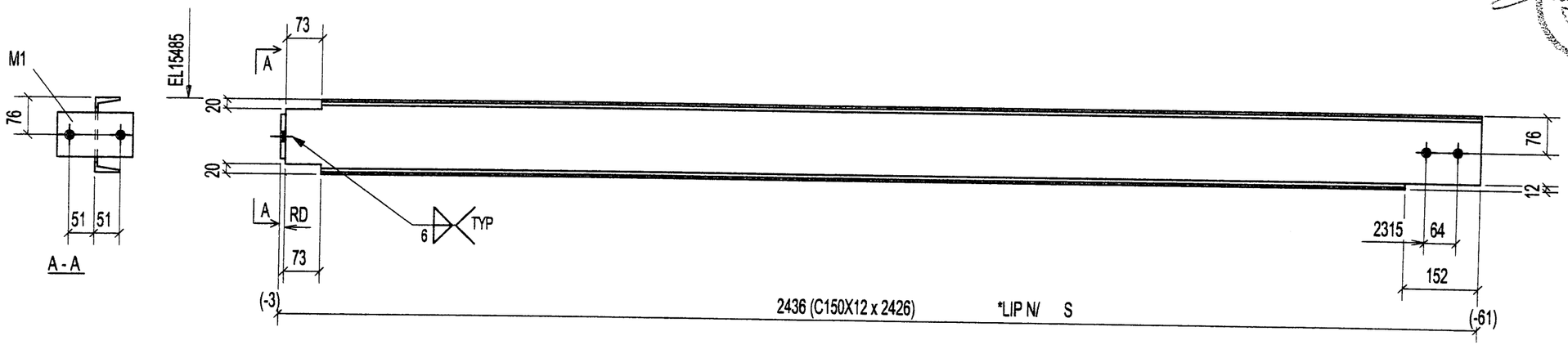

1 - BEAM - B1012

QTE	DESCRIPTION
2	BOLT_3/4"DIA_A325_1"3/4
BOULONS DE CHANTIER	

QTE	MARQUE	DESCRIPTION	LONG.	REMARKS
1	B1012	BEAM		
1	B1012	C150X12	2426	
1	M1	PL10X90	152	

QUÉRO METAL
930, DE L'ÉGLISE,
ST-ROMUALD,
QUÉBEC, G6W 5M6
Tél.:(418) 839-0999
Fax:(418) 839-3810
www.querometal.com

REV.	DESCRIPTION	DATE	PAR
0	FOR APPROVAL	29-06-05	

TROUS	PEINTURE	ACIER
13/16 Ø U / N	GALVANIZED	300W U/N

DESSINER PAR	VÉRIFIER PAR	REV.
A.P. 06/28/2005	S.P.	0

PROJET: W.W.T IQUALUIT

DIV.	CONTRAT	
E001	C2005-42	B1012

DIV.	GRID LOC.	ELEV.
1	C'/4'-5'	+17.900

CERTIFIÉ ISO 9002

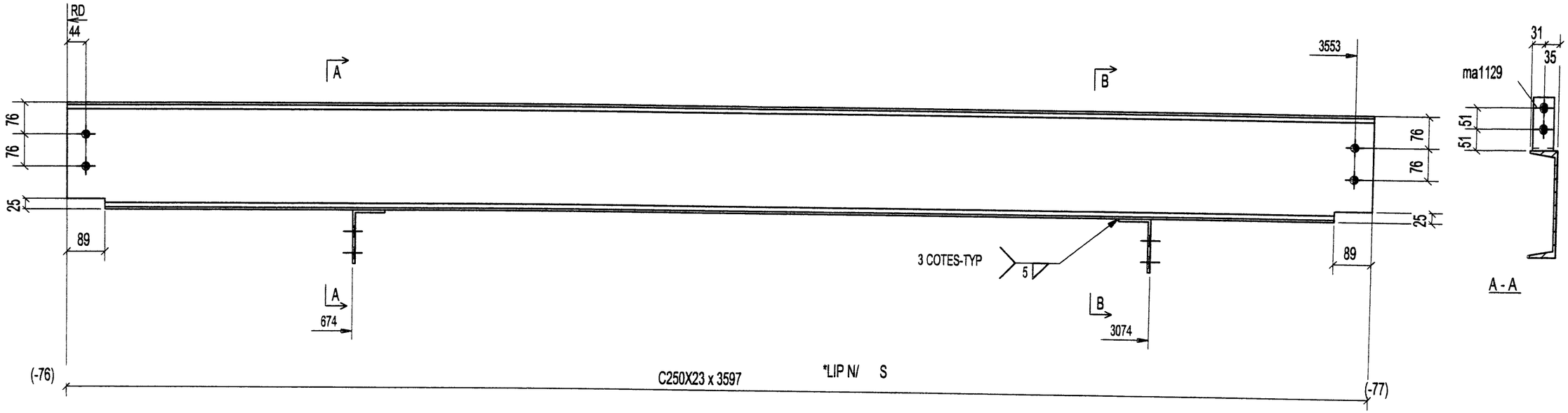

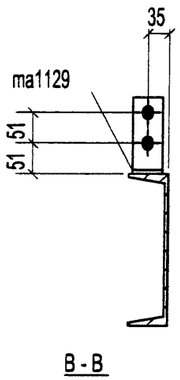

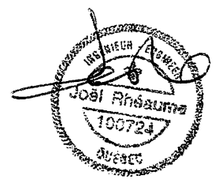

1 - BEAM - B1013

QTE	DESCRIPTION
BOULONS DE CHANTIER	

QTE	MARQUE	DESCRIPTION	LONG.	REMARKS
1	B1013	BEAM		
1	B1013	C250X23	3597	
2	ma1129	L127X76X6.4	50	

QUEBEC METAL
800, DE L'ÉGLISE,
ST-ROMUALD,
QUÉBEC, G6W 5M6
Tel.:(418) 839-0999
Fax:(418) 839-3810
www.quebecmetal.com

REV.	DESCRIPTION	DATE	PAR
0	FOR APPROVAL	29-06-05	

TROUS	PEINTURE	ACIER
13/16 Ø U/N	GALVANIZED	300W U/N

DESSINER PAR	VÉRIFIER PAR	REV.
A.P. 06/28/2005	B.P.	0

PROJET: W.W.T IQUALUIT

DIV	CONTRAT	
E001	C2005-42	B1013

DIV.	GRID LOC.	ELEV.
1	A'-B'/4'-5'	+15.485

CERTIFIÉ ISO 9002

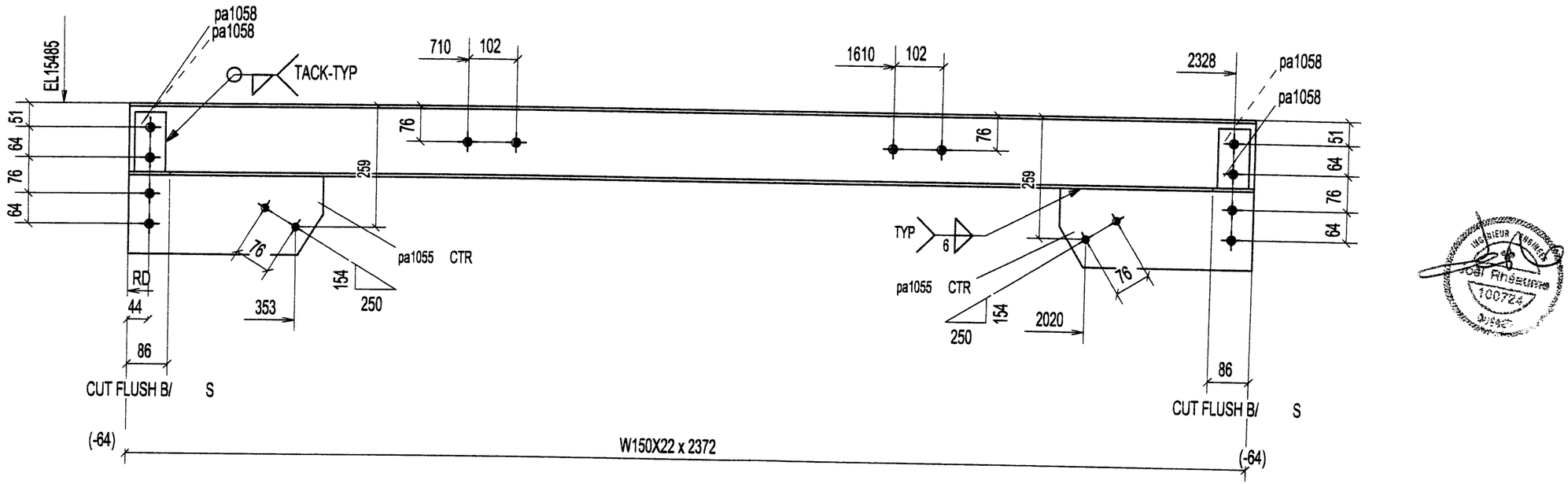

1 - BEAM - B1014

	BOLT_3/4"DIA_A325_2"1/4
4	BOLT_5/8"DIA_A325_1"1/2
QTE	DESCRIPTION
BOULONS DE CHANTIER	

QTE	MARQUE	DESCRIPTION	LONG.	REMARKS
1	B1014	BEAM		
1	B1014	W150X22	2372	350W
2	pa1055	PL10X166.5	410	
4	pa1058	PL 2X65	126	

QUÉRO METAL LIMITÉE
930, DE L'ÉGLISE,
ST-ROMUALD,
QUÉBEC, G6W 5M6
Tel.(418) 839-0999
Fax(418) 839-3810
www.queometal.com

REV.	DESCRIPTION	DATE	PAR
0	FOR APPROVAL	29-06-05	

TROUS	PEINTURE	ACIER
13/16 Ø U / N	GALVANIZED	300W U/N

DESSINER PAR	VÉRIFIER PAR	REV.
A.P. 06/28/2005	B.P.	0

PROJET: W.W.T IQUALUIT

DIV.	CONTRAT	
E001	C2005-42	B1014

INGÉNIEUR
Joël Rhéaume
100724
QUÉBEC

DIV.	GRID LOC.	ELEV.
1	A'-B'/3'-5'	+15.485

CERTIFIÉ ISO 9002

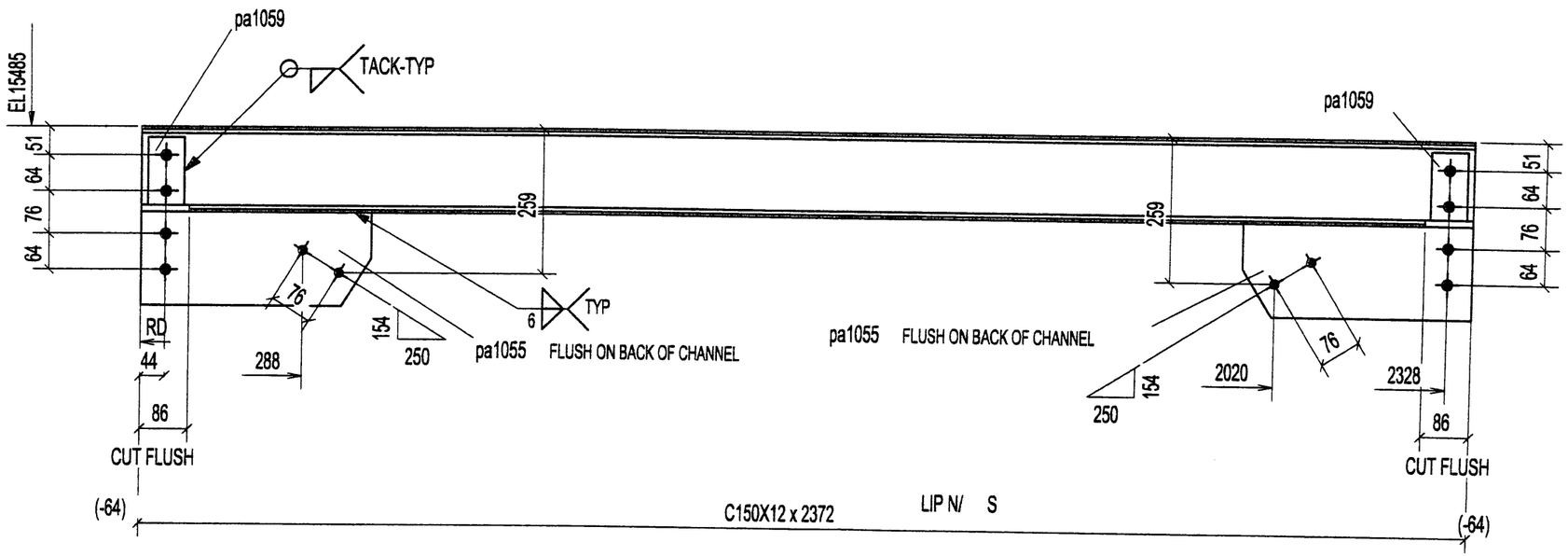

1 - BEAM - B1015

QTE	DESCRIPTION
	BOLT_3/4"DIA_A325_2"1/4
4	BOLT_5/8"DIA_A325_1"1/2
BOULONS DE CHANTIER	

QTE	MARQUE	DESCRIPTION	LONG.	REMARKS
1	B1015	BEAM		
1	B1015	C150X12	2372	
2	pa1055	PL10X166.5	410	
2	pa1059	PL 4X65	121	

QUEBEC METAL
800, DE L'ÉGLISE,
ST-ROMUALD,
QUÉBEC, G6W 5M6
Tel.:(418) 839-0999
Fax:(418) 839-3818
www.quebecmetal.com

REV.	DESCRIPTION	DATE	PAR
0	FOR APPROVAL	29-06-05	

TROUS	PEINTURE	ACIER
13/16 Ø U / N	GALVANIZED	300W U/N

DESSINER PAR	VÉRIFIER PAR	REV.
A.P. 06/29/2005	B.P.	0

PROJET: W.W.T IQUALUIT

DIV.	CONTRAT	
E001	C2005-42	B1015

DIV	GRID LOC.	ELEV.
1	B'/1'	+18.887

CERTIFIÉ ISO 9002

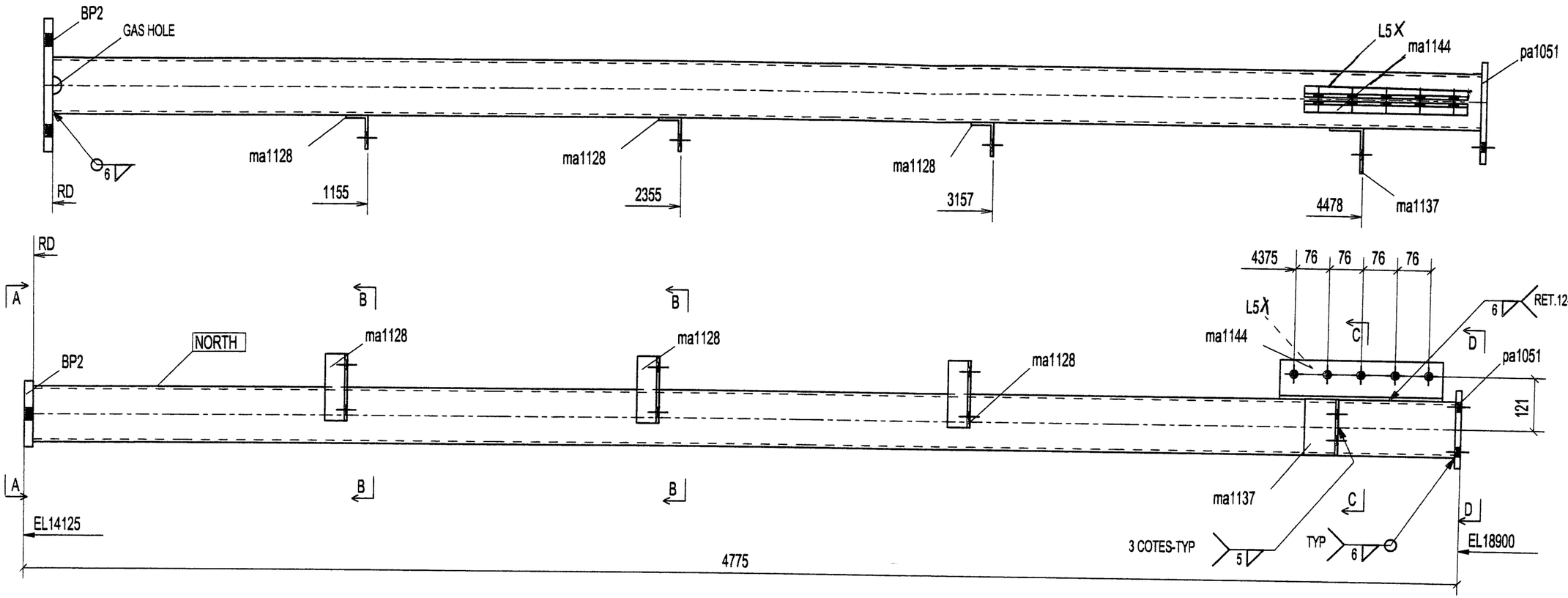

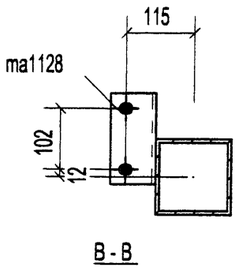

B - B

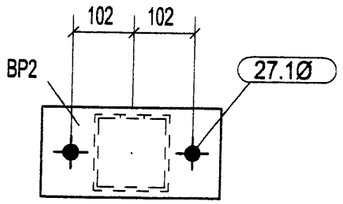

A - A

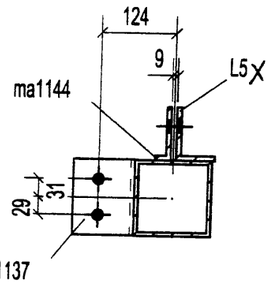

C - C

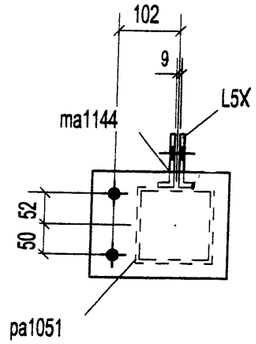

D - D

1 - COLUMN - C1000

1	C1000	COLUMN		
1	C1000	HSS127X127X6.4	4742	350W-GR-C
1	BP2	PL20X150	300	
1	L5 X	L89X64X7.9	368	CUT @ 25mm
3	ma1128	L76X51X6.4	152	
1	ma1137	L102X76X6.4	127	
1	ma1144	L89X64X7.9	368	
1	pa1051	PL13X177	228	CUT @ 25mm
QTE	MARQUE	DESCRIPTION	LONG.	REMARKS

2	BOLT_3/4"DIA_A325_1"3/4
	BOLT_3/4"DIA_A325_2"
5	BOLT_3/4"DIA_A325_2"1/4
QTE	DESCRIPTION
BOULONS DE CHANTIER	

QUEBEC METAL
930, DE L'ÉGLISE,
ST-ROMUALD,
QUÉBEC, G6W 5M6
Tel.:(418) 839-0999
Fax:(418) 839-3810
www.quebecmetal.com

REV.	DESCRIPTION	DATE	PAR
0	FOR APPROVAL	29-06-05	

TROUS	PEINTURE	ACIER
13/16 Ø U / N	GALVANIZED	300W U/N

DESSINER PAR	VÉRIFIER PAR	REV.
A.P. 06/28/2005	B.P.	0

PROJET: W.W.T IQUALUIT

DIV.	CONTRAT	
E001	C2005-42	C1000

DIV	GRID LOC.	ELEV.
1	A'/1'	+17.415

CERTIFIÉ ISO 9002

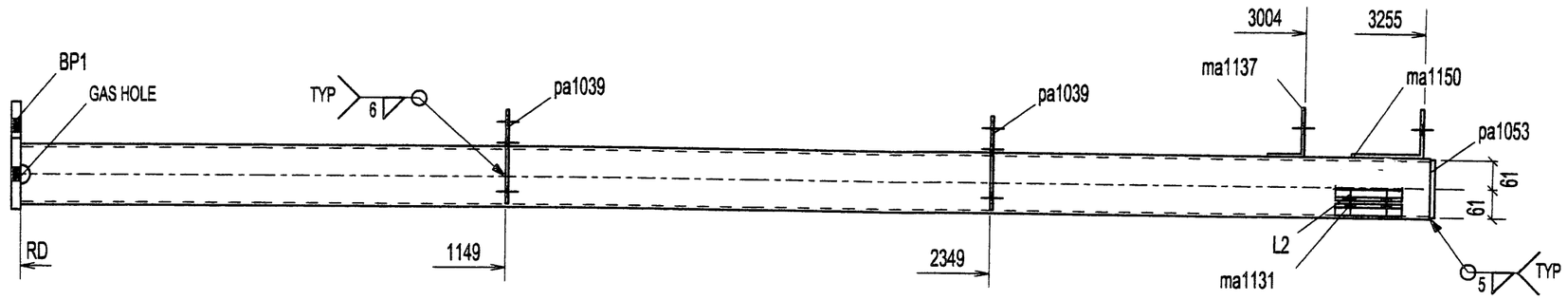

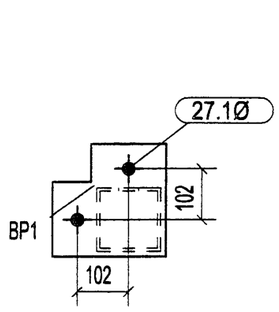

A - A

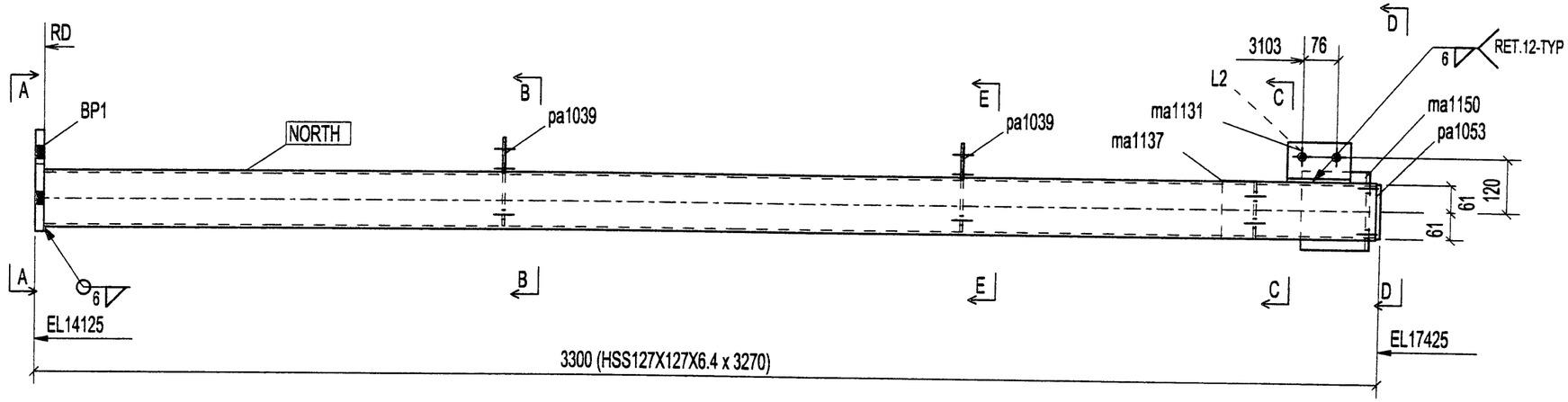

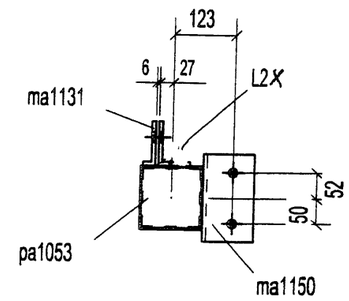

D - D

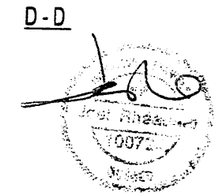

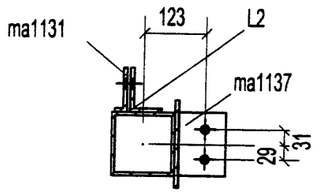

C - C

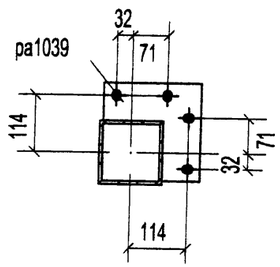

B - B

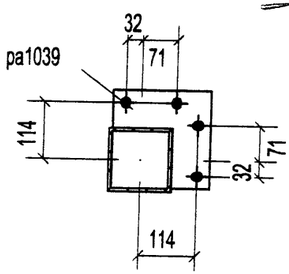

E - E

1 - COLUMN - C1001

QTE	MARQUE	DESCRIPTION	LONG.	REMARKS
1	C1001	COLUMN		
1	C1001	HSS127X127X6.4	3270	350W-GR-C
1	BP1	PL20X225	225	
1	L2K	L89X64X7.9	140	CUT @ 25mm
1	ma1131	L89X64X7.9	140	CUT @ 25mm
1	ma1137	L102X76X6.4	127	
1	ma1150	L152X102X7.9	175	
2	pa1039	PL 6X196.2	196	
1	pa1053	FL10X121	121	

QTE	DESCRIPTION
4	BOLT_3/4"DIA_A325_1"3/4
2	BOLT_3/4"DIA_A325_2"
BOULONS DE CHANTIER	

QUEBEC METAL
930, DE L'ÉGLISE,
ST-ROMUALD,
QUÉBEC, G6W 5M6
Tél.:(418) 839-3999
Fax:(418) 839-3810
www.quebecmetal.com

REV.	DESCRIPTION	DATE	PAR
0	FOR APPROVAL	29-06-05	

TROUS	PEINTURE	ACIER
13/16 Ø U / N	GALVANIZED	300W U/N

DESSINER PAR	VÉRIFIER PAR	REV.
A.P. 06/28/2005	B.P.	0

PROJET: W.W.T IQUALUIT

DIV	CONTRAT	
E001	C2005-42	C1001

DIV	GRID LOC.	ELEV.
1	C'/5'	+17.915

CERTIFIÉ ISO 9002

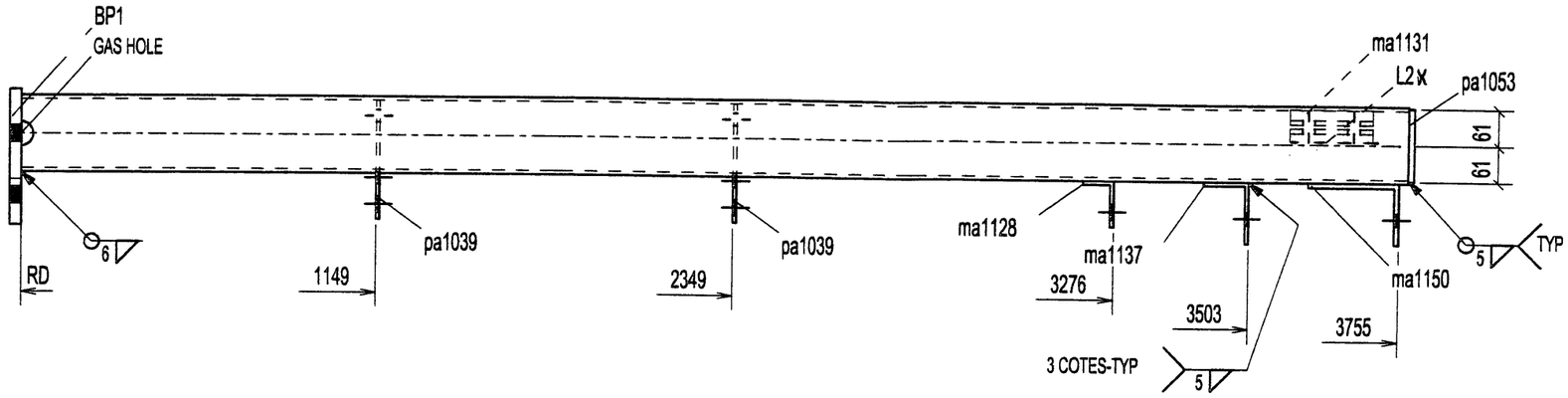

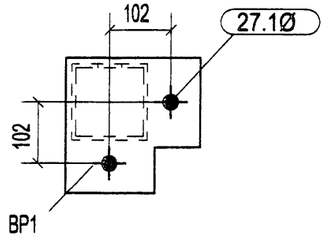

A - A

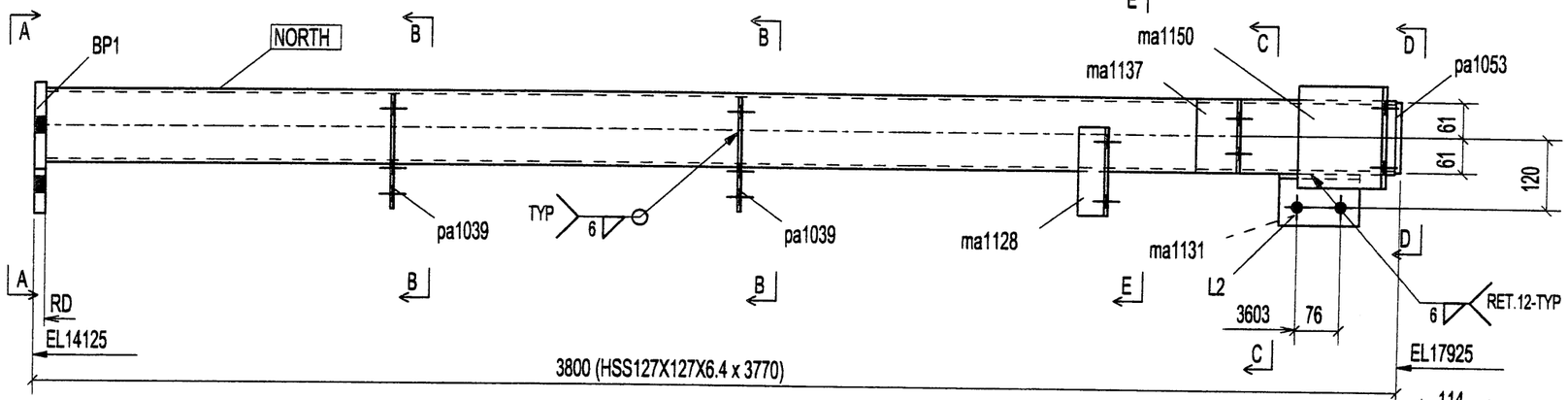

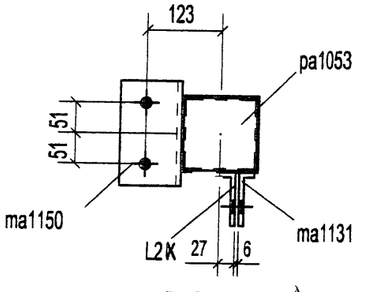

D - D

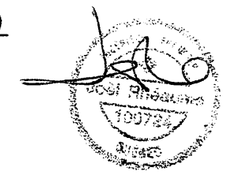

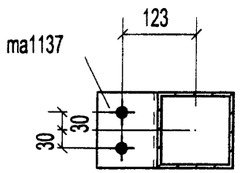

C - C

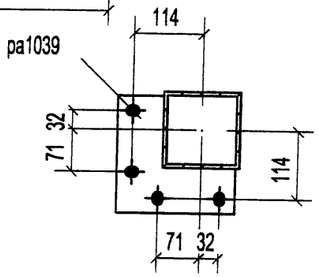

B - B

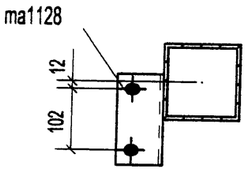

E - E

1 - COLUMN - C1002

QTE	MARQUE	DESCRIPTION	LONG.	REMARKS
1	C1002	COLUMN		
1	C1002	HSS127X127X6.4	3770	350W-GR-C
1	BP1	PL20X225	225	
1	L2 x	L89X64X7.9	140	CUT @ 25mm
1	ma1128	L76X51X6.4	152	
1	ma1131	L89X64X7.9	140	CUT @ 25mm
1	ma1137	L102X76X6.4	127	
1	ma1150	L152X102X7.9	175	
2	pa1039	PL 6X196.2	196	
1	pa1053	FL10X121	121	

QTE	DESCRIPTION
*	BOLT_3/4"DIA_A325_1"3/4
2	BOLT_3/4"DIA_A325_2"

BOULONS DE CHANTIER

QUEBEC METAL GMBL
330, DE L'ÉGLISE,
ST-ROMUALD,
QUÉBEC, G6W 5M6
Tel.:(418) 839-0999
Fax:(418) 839-3810
www.quebecmetal.com

REV.	DESCRIPTION	DATE	PAR
0	FOR APPROVAL	29-06-05	

TROUS	PEINTURE	ACIER
13/16 Ø U / N	GALVANIZED	300W U/N

DESSINER PAR	VÉRIFIER PAR	REV.
A.P. 06/28/2005	B.P.	0

PROJET: W.W.T IQUALUIT

DIV.	CONTRAT	
E001	C2005-42	C1002

DIV.	GRID LOC.	ELEV.
1	A'-B'/4'-5'	+15.475

CERTIFIÉ ISO 9002

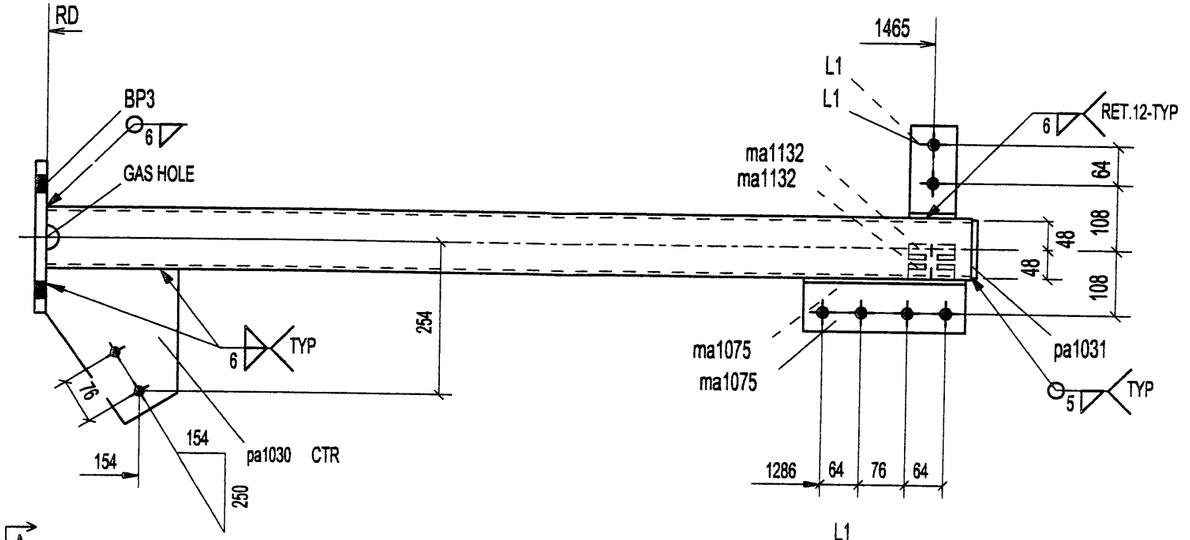

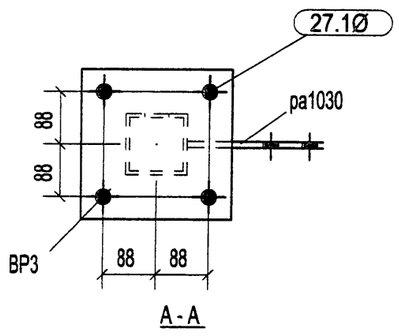

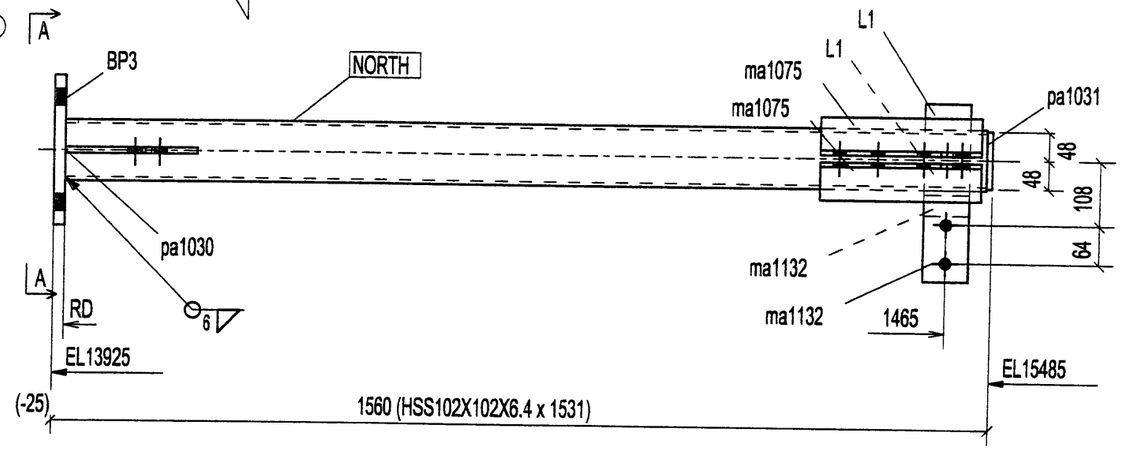

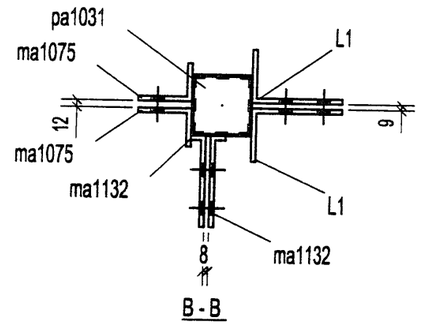

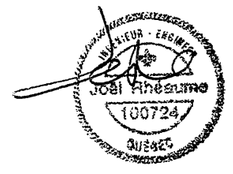

1 - COLUMN - C1003

QTE	MARQUE	DESCRIPTION	LONG.	REMARKS
1	C1003	COLUMN		
1	C1003	HSS102X102X6.4	1531	350W-GR-C
1	BP3	PL19X250	250	
2	L1	L152X89X7.9	76	
2	ma1075	L89X64X7.9	268	
2	ma1132	L152X89X7.9	76	Cut @ 25mm
1	pa1030	PL10X217.1	258	
1	pa1031	PL10X95.6	96	

QTE	DESCRIPTION
3	BOLT_3/4"DIA_A325_2"1/4
2	BOLT_5/8"DIA_A325_1"3/4

BOULONS DE CHANTIER

BUERO METAL
930, DE L'ÉGLISE,
ST-ROMUALD,
QUÉBEC, G6W 5M6
Tel.:(418) 839-0959
Fax:(418) 839-3810
www.quebecmetal.com

REV.	DESCRIPTION	DATE	PAR
0	FOR APPROVAL	29-06-05	

TROUS	PEINTURE	ACIER
13/16 Ø U / N	GALVANIZED	300W U/N

DESSINER PAR	VÉRIFIER PAR	REV.
A.P. 06/28/2005	B.P.	0

PROJET: W.W.T IQUALUIT

DIV.	CONTRAT	
E001	C2005-42	C1003

DIV.	GRID LOC.	ELEV.
1	A'-B'/3'	+17.000

CERTIFIÉ ISO 9002

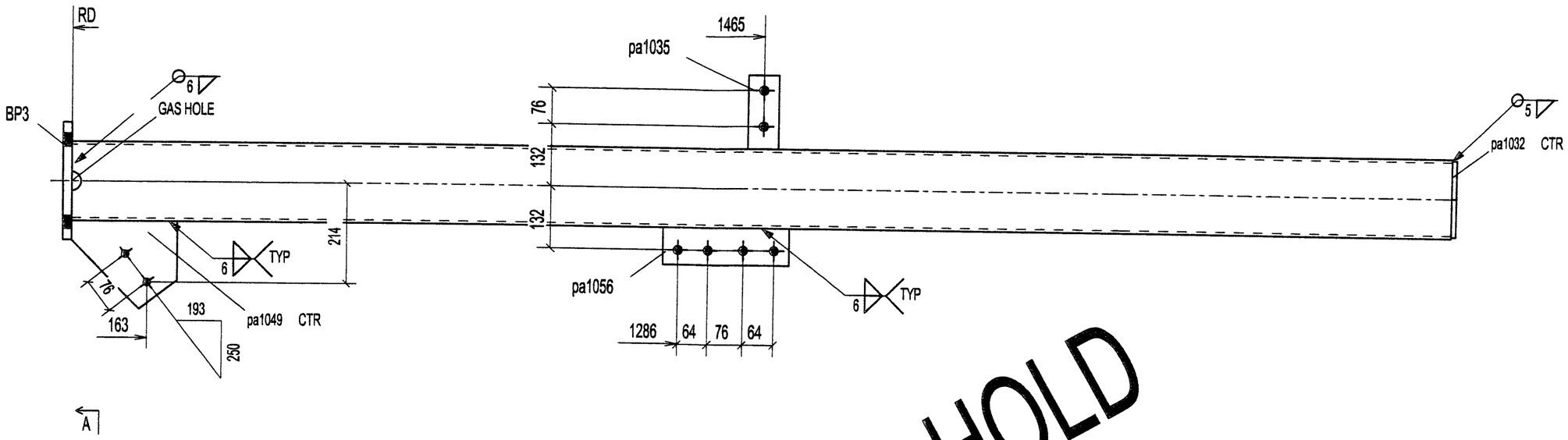

HOLD

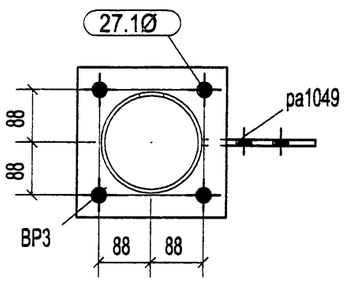

A - A

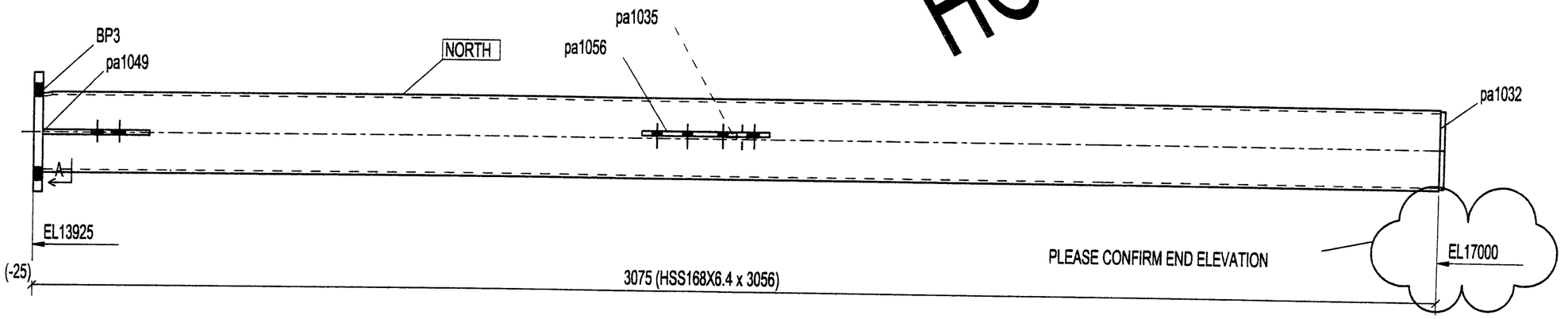

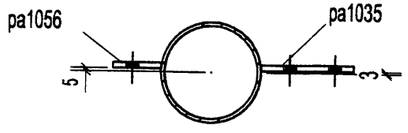

B - B

1 - COLUMN - C1004

QTE	MARQUE	DESCRIPTION	LONG.	REMARKS
1	C1004	COLUMN		
1	C1004	HSS168X6.4	3056	350W-GR-C
1	BP3	PL19X250	250	
1	pa1032	PL 10X162.3	162	
1	pa1035	FL10X64	156	
1	pa1049	PL10X187.3	225	
1	pa1056	PL10X80	268	

QTE	DESCRIPTION
2	BOLT_5/8"DIA_A325_1"3/4
BOULONS DE CHANTIER	

QUÉBEC METAL
800, DE L'ÉGLISE,
ST-ROMUALD,
QUÉBEC, G6W 5M6
Tel.:(418) 839-0999
Fax:(418) 839-3810
www.quebecmetal.com

REV.	DESCRIPTION	DATE	PAR
0	FOR APPROVAL	29-06-05	

TROUS	PEINTURE	ACIER
13/16 Ø U/N	GALVANIZED	300W U/N

DESSINER PAR	VÉRIFIER PAR	REV.
A.P. 06/28/2005	B.P.	0

PROJET: W.W.T IQUALUIT

DIV.	CONTRAT	
E001	C2005-42	C1004

DIV	GRID LOC.	ELEV.
1	A'/3'	+17.415

CERTIFIÉ ISO 9002

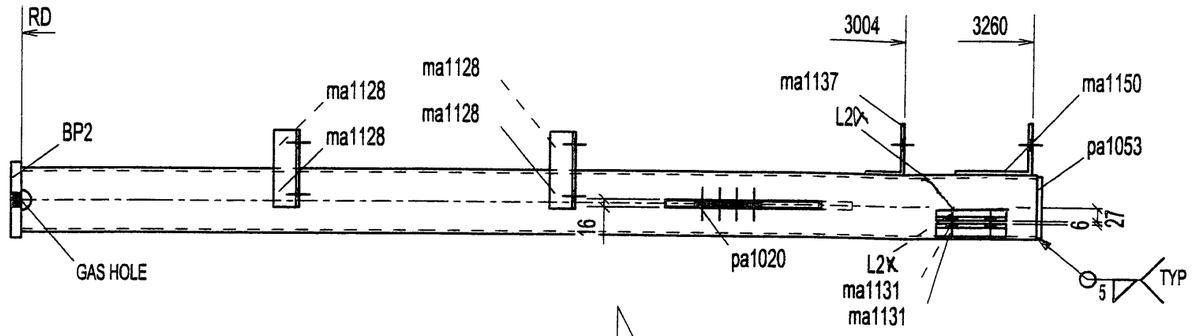

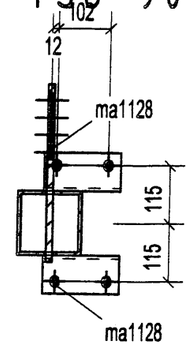

B - B

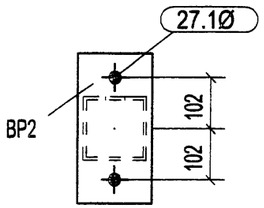

A - A

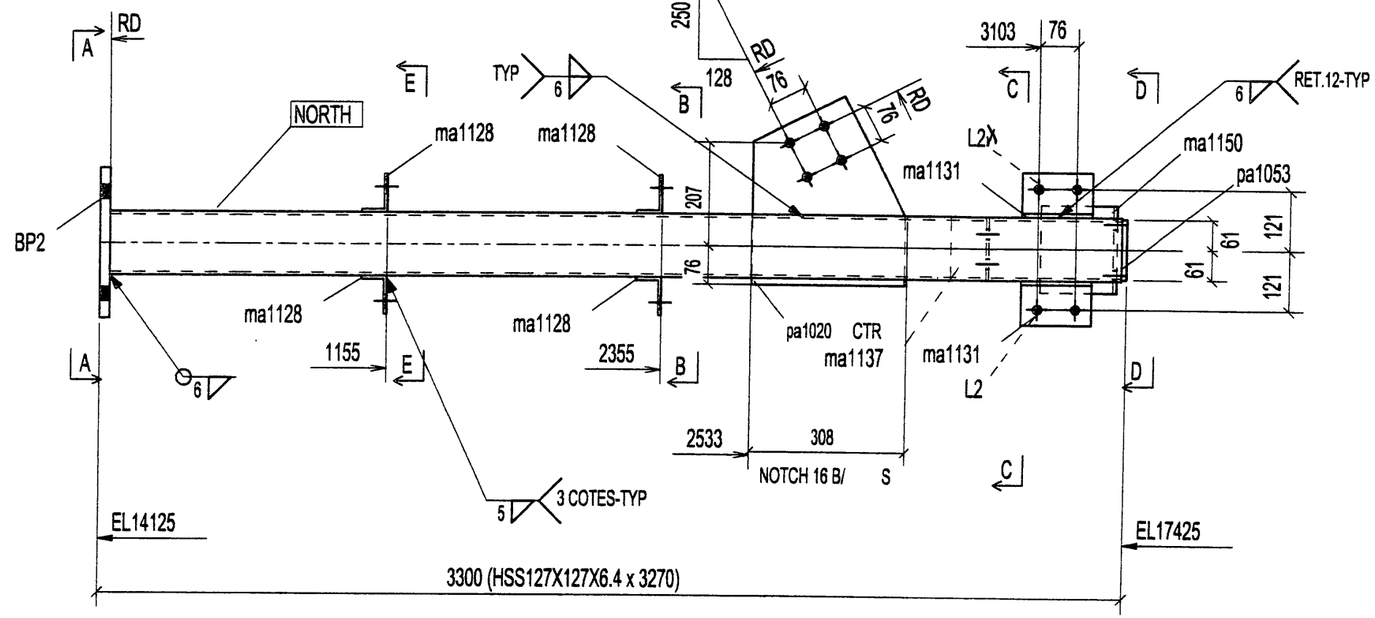

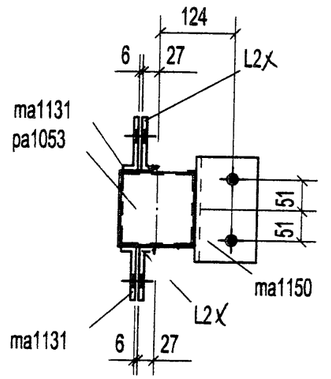

D - D

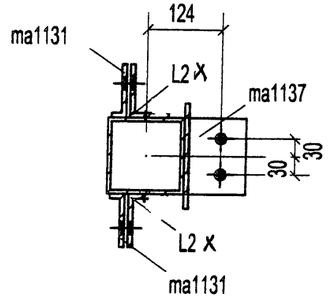

C - C

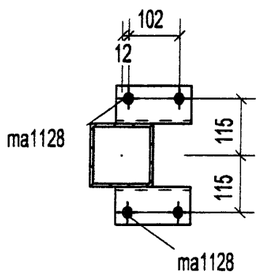

E - E

1 - COLUMN - C1005

1	C1005	COLUMN		
1	C1005	HSS127X127X6.4	3270	350W-GR-C
1	BP2	PL20X150	300	
2	L2 X	L89X64X7.9	140	CUT @ 25mm
4	ma1128	L76X51X6.4	152	
2	ma1131	L89X64X7.9	140	CUT @ 25mm
1	ma1137	L102X76X6.4	127	
1	ma1150	L152X102X7.9	175	
1	pa1020	PL13X332.3	392	
1	pa1053	FL10X121	121	
QTE	MARQUE	DESCRIPTION	LONG.	REMARKS

QTE	DESCRIPTION
	BOLT_3/4"DIA_A325_1"3/4
4	BOLT_3/4"DIA_A325_2"
BOULONS DE CHANTIER	

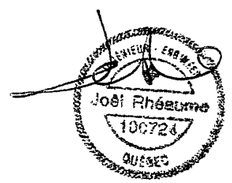

QUÉBEC METAL
300, DE L'ÉGLISE,
ST-ROMUALD,
QUÉBEC, G6W 5M6
Tel.:(418) 839-0999
Fax:(418) 839-3810
www.quebecmetal.com

REV.	DESCRIPTION	DATE	PAR
0	FOR APPROVAL	29-06-05	

TROUS	PEINTURE	ACIER
13/16 Ø U / N	GALVANIZED	300W U/N

DESSINER PAR	VÉRIFIER PAR	REV.
A.P. 06/29/2005	B.P.	0

PROJET: W.W.T IQUALUIT

DIV.	CONTRAT	
E001	C2005-42	C1005

DIV	GRID LOC.	ELEV.
1	C'/4'	+17.915

CERTIFIÉ ISO 9002

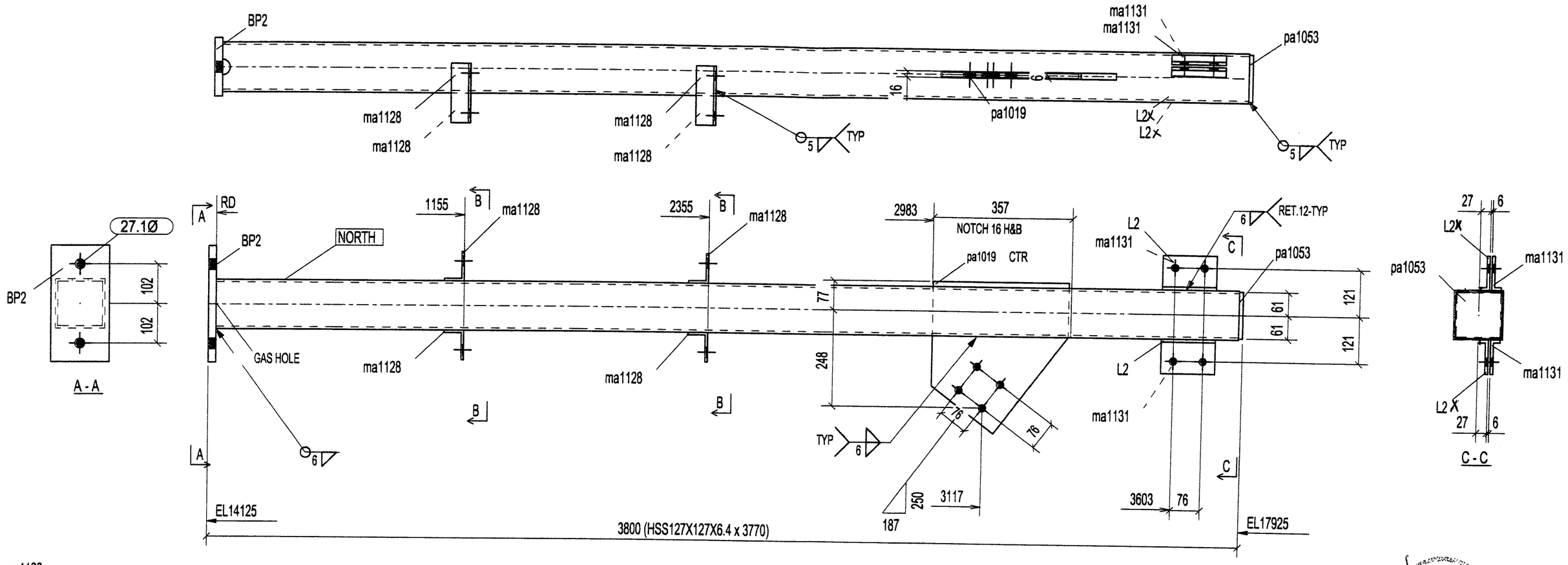

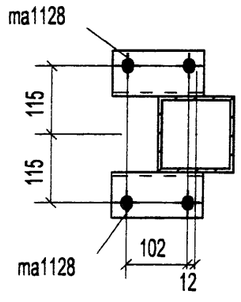

B - B

1 - COLUMN - C1006

QTE	MARQUE	DESCRIPTION	LONG.	REMARKS
1	C1006	COLUMN		
1	C1006	HSS127X127X6.4	3770	350W-GR-C
1	BP2	PL20X150	300	
2	L2X	L89X64X7.9	140	CUT @ 25mm
4	ma1128	L76X51X6.4	152	
2	ma1131	L89X64X7.9	140	CUT @ 25mm
1	pa1019	PL13X363.2	425	
1	pa1053	FL10X121	121	

QTE	DESCRIPTION
4	BOLT_3/4"DIA_A325_2"
BOULONS DE CHANTIER	

QUÉRO METAL
200, DE L'ÉGLISE,
ST-ROMUALD,
QUÉBEC, G6W 5M6
Tél.:(418) 839-0999
Fax:(418) 839-3810
www.queerometal.com

REV.	DESCRIPTION	DATE	PAR
0	FOR APPROVAL	29-06-05	

TROUS	PEINTURE	ACIER
13/16 Ø U / N	GALVANIZED	300W U/N

DESSINER PAR	VÉRIFIER PAR	REV.
A.P. 06/28/2005	B.P.	0

PROJET: W.W.T IQUALUIT

DIV.	CONTRAT	
E001	C2005-42	C1006

DIV	GRID LOC.	ELEV.
1	3-4/A>	+12.577

CERTIFIÉ ISO 9002

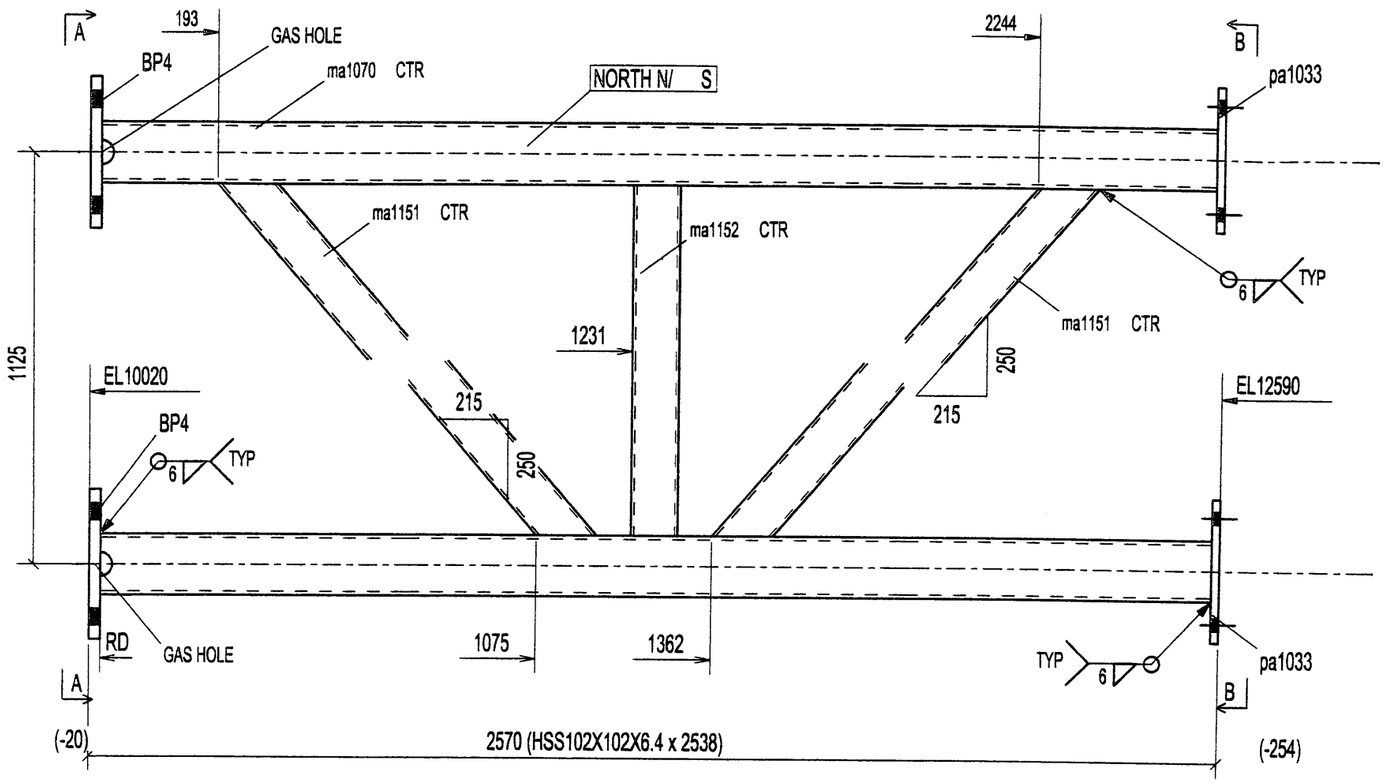

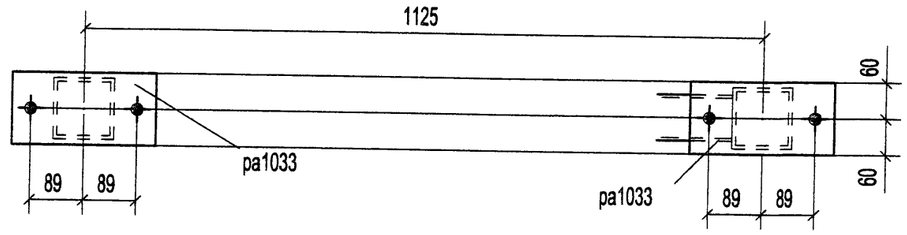

B - B

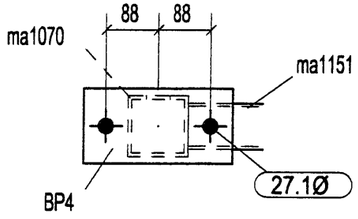

A - A

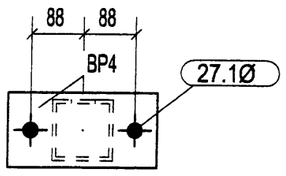

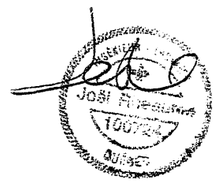

1 - FRAME - C1007

1	C1007	FRAME		
1	C1007	HSS102X102X6.4	2538	350W-GR-C
2	BP4	PL19X125	250	
1	ma1070	HSS102X102X6.4	2538	350W-GR-C
2	ma1151	HSS76X76X4.8	1416	
1	ma1152	HSS76X76X4.8	1023	
2	pa1033	PL13X120	240	
QTE	MARQUE	DESCRIPTION	LONG.	REMARKS

QTE	DESCRIPTION
BOULONS DE CHANTIER	

GUERARD METAL
900, DE L'ÉGLISE,
ST-ROMUALD,
QUÉBEC, G6W 5M6
Tél.:(418) 839-0959
Fax:(418) 839-3810
www.guerardmetal.com

REV.	DESCRIPTION	DATE	PAR
0	FOR APPROVAL	29-06-05	

TROUS	PEINTURE	ACIER	
13/16 Ø U/N	GALVANIZED	300W U/N	
DESSINER PAR: A.P. 06/28/2005	VÉRIFIER PAR: B.P.	REV.: 0	

PROJET: W.W.T IQUALUIT

DIV.	CONTRAT	
E001	C2005-42	C1007

DIV	GRID LOC.	ELEV.
1	A'/5'	+17.415

CERTIFIÉ ISO 9002

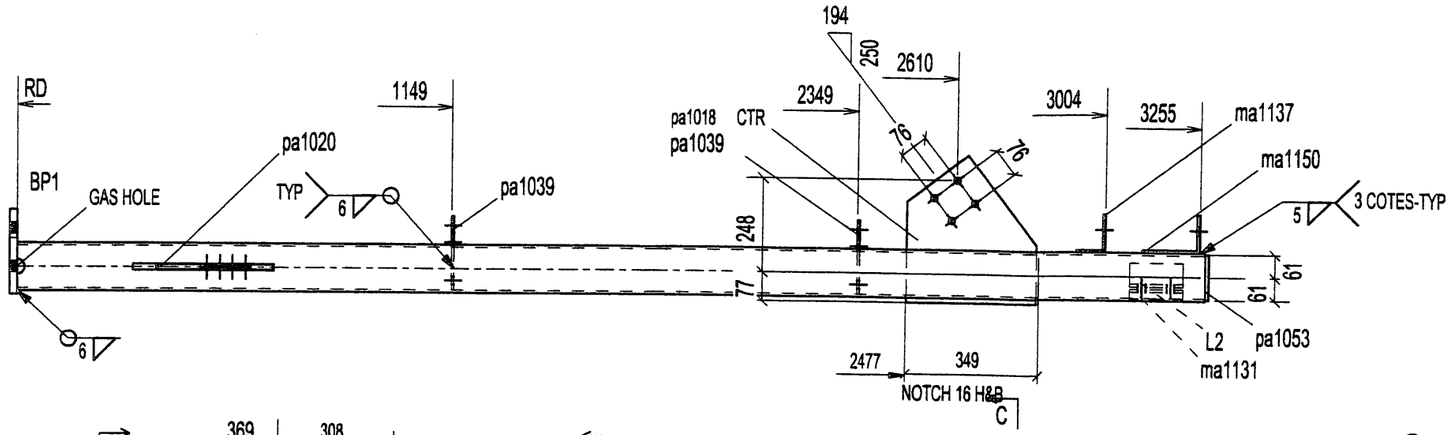

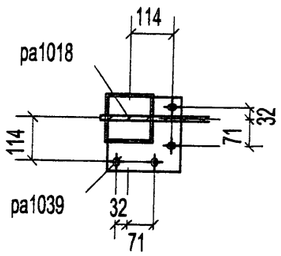

C - C

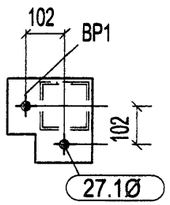

A - A

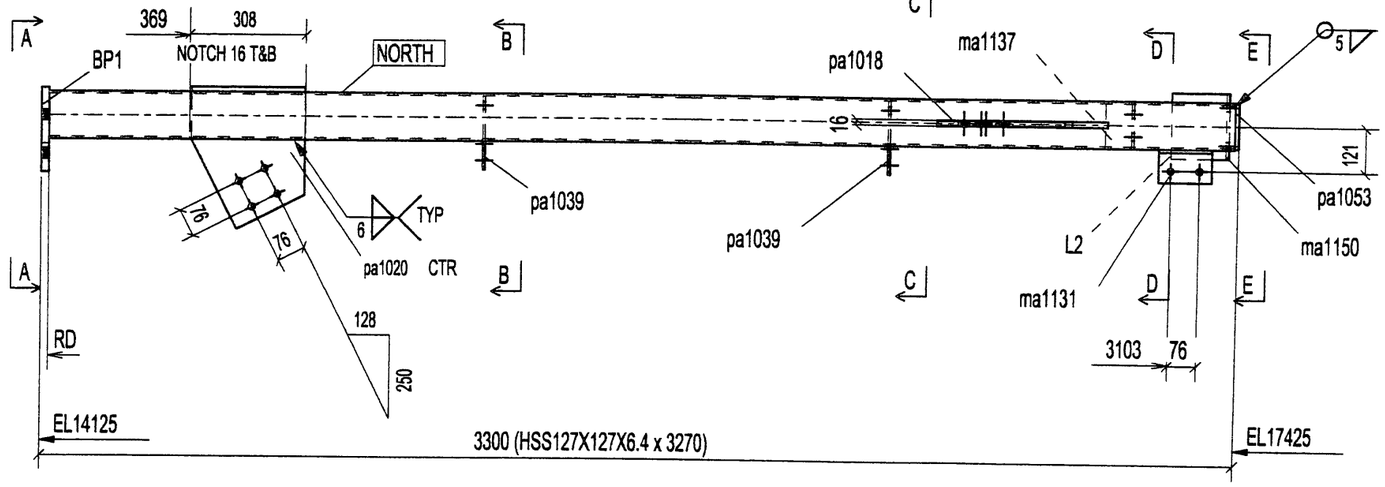

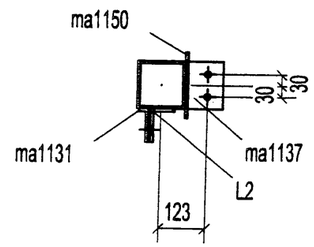

D - D

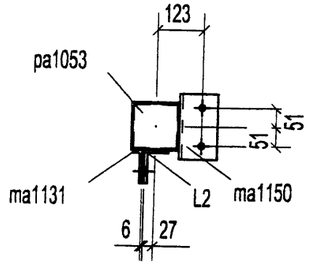

E - E

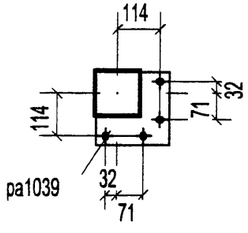

B - B

1 - COLUMN - C1008

QTE	MARQUE	DESCRIPTION	LONG.	REMARKS
1	C1008	COLUMN		
1	C1008	HSS127X127X6.4	3270	350W-GR-C
1	BP1	PL20X225	225	
1	L2	L89X64X7.9	140	
1	ma1131	L89X64X7.9	140	CUT @ 25mm
1	ma1137	L102X76X6.4	127	
1	ma1150	L152X102X7.9	175	
1	pa1018	PL13X366.1	421	
1	pa1020	PL13X332.3	392	
2	pa1039	PL 6X196.2	196	
1	pa1053	FL10X121	121	

QTE	DESCRIPTION
	BOLT_3/4"DIA_A325_1"3/4
2	BOLT_3/4"DIA_A325_2"
BOULONS DE CHANTIER	

Joël Rhéaume 100724 QUÉBEC

QUEBEC METAL

930, DE L'ÉGLISE
ST-ROMUALD,
QUÉBEC, G6W 5M6
Tel.:(418) 839-0999
Fax:(418) 839-3910
www.quebecmetal.com

REV.	DESCRIPTION	DATE	PAR
0	FOR APPROVAL	29-06-05	

TROUS	PEINTURE	ACIER
13/16 Ø U/N	GALVANIZED	300W U/N

DESSINER PAR	VÉRIFIER PAR	REV.
A.P. 06/28/2005	B.P.	0

PROJET: W.W.T IQUALUIT

DIV.	CONTRAT	
E001	C2005-42	C1008

DIV	GRID LOC.	ELEV.
1	B'/5'	+18.887

CERTIFIÉ ISO 9002

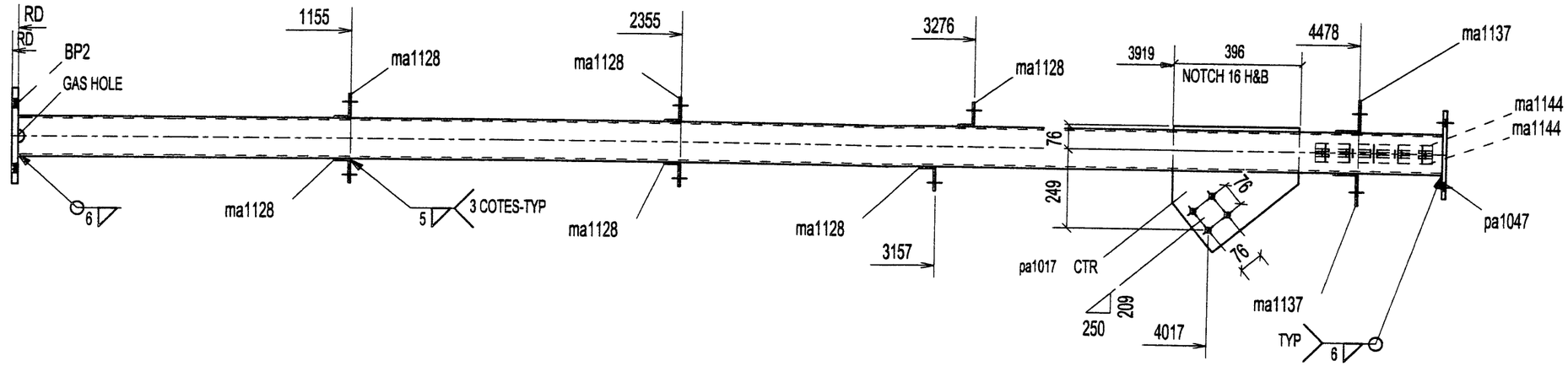

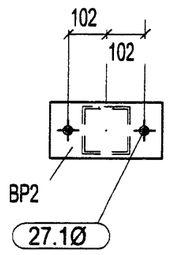

A - A

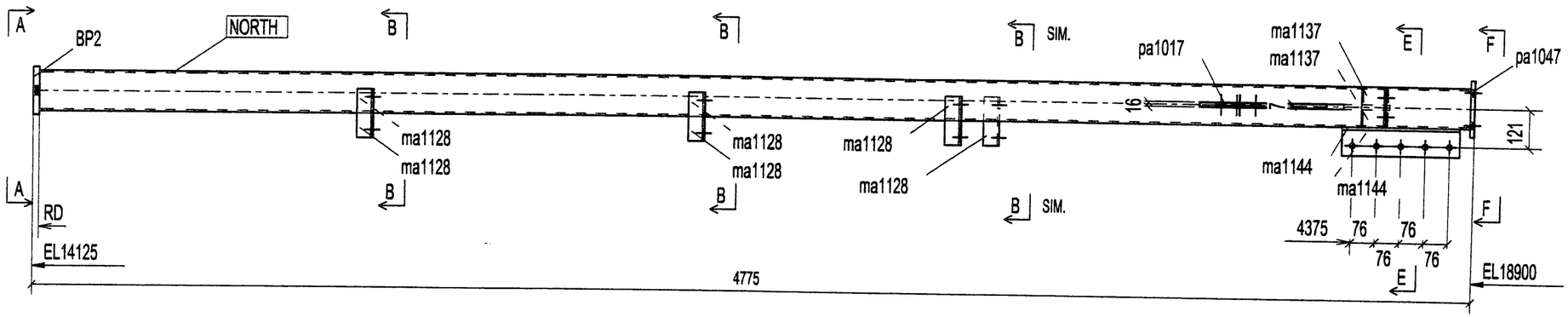

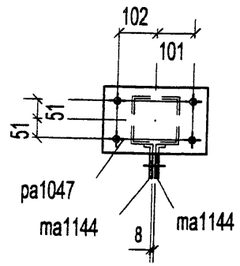

F - F

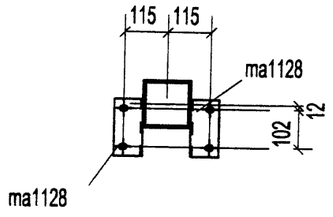

B - B

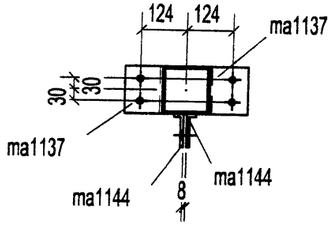

E - E

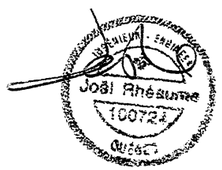

1 - COLUMN - C1009

1	C1009	COLUMN		
1	C1009	HSS127X127X6.4	4742	350W-GR-C
1	BP2	PL20X150	300	
6	ma1128	L76X51X6.4	152	
2	ma1137	L102X76X6.4	127	
2	ma1144	L89X64X7.9	368	Cut @ 25 mm
1	pa1017	PL13X387.2	456	
1	pa1047	PL13X177	278	
QTE	MARQUE	DESCRIPTION	LONG.	REMARKS

4	BOLT_3/4"DIA_A325_1"3/4
	BOLT_3/4"DIA_A325_2"
5	BOLT_3/4"DIA_A325_2"1/4
QTE	DESCRIPTION
BOULONS DE CHANTIER	

QUEBEC METAL
330, DE L'ÉGLISE,
ST-ROMUALD,
QUÉBEC, G6W 5M6
Tél.:(418) 839-0999
Fax:(418) 839-3810
www.quebecmetal.com

REV.	DESCRIPTION	DATE	PAR
0	FOR APPROVAL	29-06-05	

TROUS	PEINTURE	ACIER
13/16 Ø U / N	GALVANIZED	300W U/N

DESSINER PAR	VÉRIFIER PAR	REV.
A.P. 06/28/2005	B.P.	0

PROJET: W.W.T IQUALUIT

DIV.	CONTRAT	
E001	C2005-42	C1009

DIV	GRID LOC.	ELEV.
1	2/A	+17.915

CERTIFIÉ ISO 9002

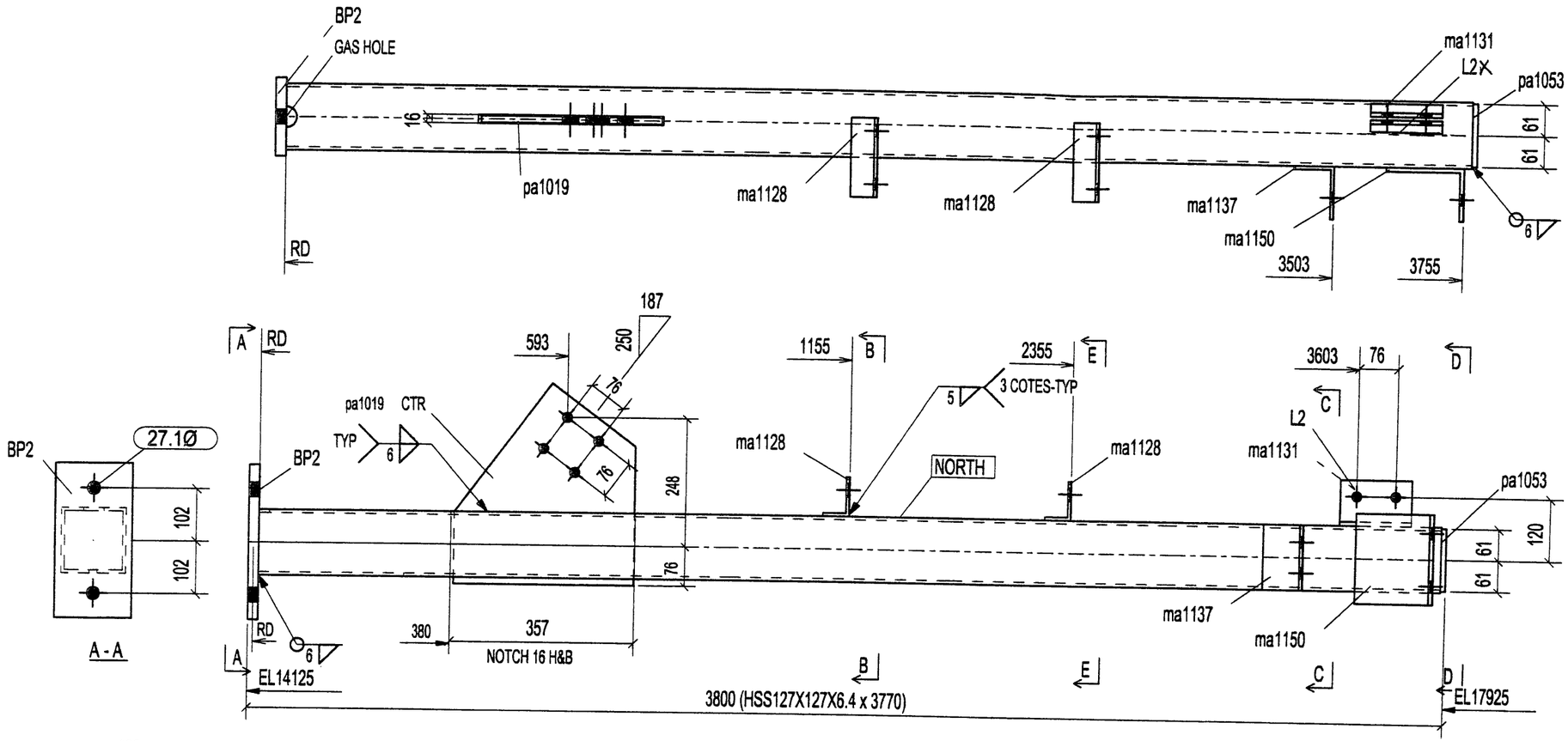

1 - COLUMN - C1010

QTE	MARQUE	DESCRIPTION	LONG.	REMARKS
1	C1010	COLUMN		
1	C1010	HSS127X127X6.4	3770	350W-GR-C
1	BP2	PL20X150	300	
1	L2X	L89X64X7.9	140	Cut @ 25mm
2	ma1128	L76X51X6.4	152	
1	ma1131	L89X64X7.9	140	CUT @ 25mm
1	ma1137	L102X76X6.4	127	
1	ma1150	L152X102X7.9	175	
1	pa1019	PL13X363.2	425	
1	pa1053	PL10X121	121	

QTE	DESCRIPTION
1	BOLT_3/4"DIA_A325_1"3/4
2	BOLT_3/4"DIA_A325_2"
BOULONS DE CHANTIER	

QUEBEC METAL
930, DE L'ÉGLISE,
ST-ROMUALD,
QUÉBEC, G6W 5M6
Tél.:(418) 839-0999
Fax:(418) 839-3910
www.quebecmetal.com

REV.	DESCRIPTION	DATE	PAR
0	FOR APPROVAL	29-06-05	

TROUS	PEINTURE	ACIER
13/16 Ø U/N	GALVANIZED	300W U/N

DESSINER PAR	VÉRIFIER PAR	REV.
A.P. 06/28/2005	B.P.	0

PROJET: W.W.T IQUALUIT

DIV.	CONTRAT	
E001	C2005-42	C1010

Joël Rhéaume
100724
Québec

DIV	GRID LOC.	ELEV.
1	A'-B'/3'	+15.475

CERTIFIÉ ISO 9002

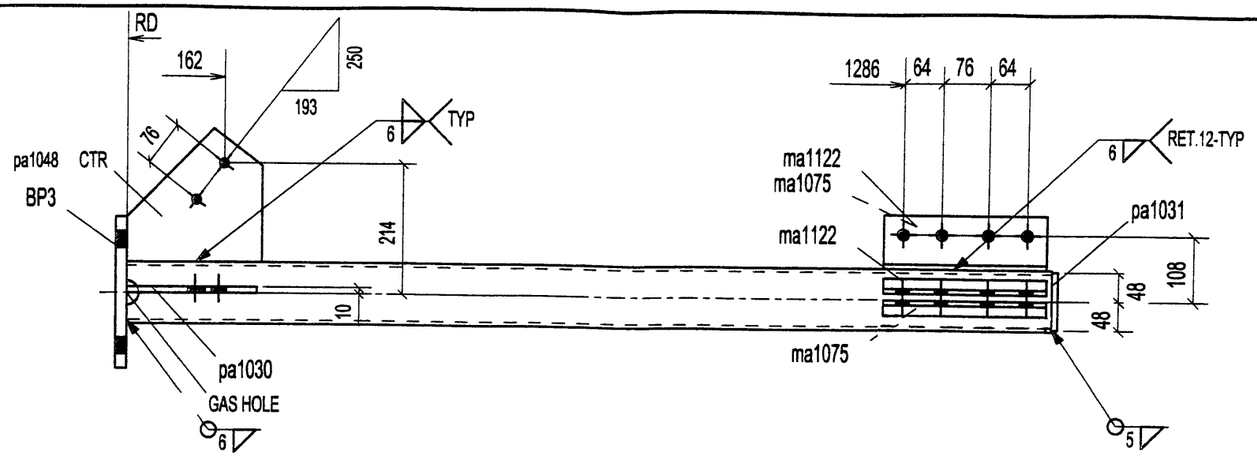

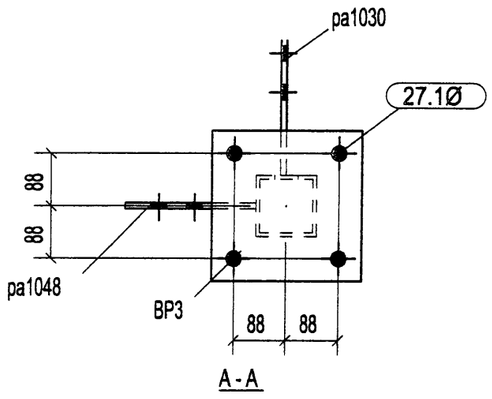

A - A

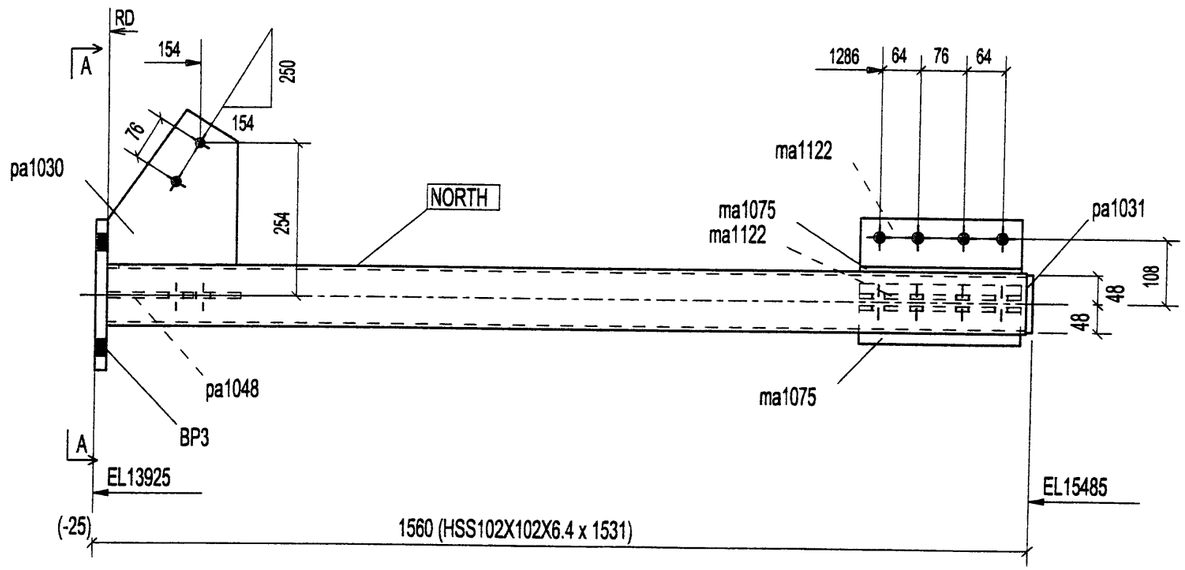

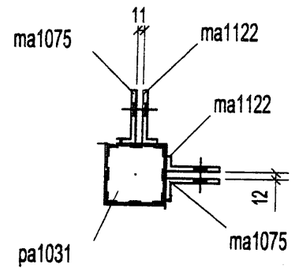

B - B

1 - COLUMN - C1011

1	C1011	COLUMN		
1	C1011	HSS102X102X6.4	1531	350W-GR-C
1	BP3	PL19X250	250	
2	ma1075	L89X64X7.9	268	CUT@25mm
2	ma1122	L89X64X7.9	268	CUT @ 25mm
1	pa1030	PL10X217.1	258	
1	pa1031	PL10X95.6	96	
1	pa1048	PL10X220.4	225	
QTE	MARQUE	DESCRIPTION	LONG.	REMARKS

QTE	DESCRIPTION
	BOLT_3/4"DIA_A325_2"1/4
4	BOLT_5/8"DIA_A325_1"3/4
BOULONS DE CHANTIER	

QUÉRO METAL
930, DE L'ÉGLISE,
ST-ROMUALD,
QUÉBEC, G6W 5M6
Tel.:(418) 839-0969
Fax:(418) 839-3810
www.querometal.com

REV.	DESCRIPTION	DATE	PAR
0	FOR APPROVAL	29-06-05	

TROUS	PEINTURE	ACIER
13/16 Ø U/N	GALVANIZED	300W U/N

DESSINER PAR	VÉRIFIER PAR	REV.
A.P. 06/29/2005	B.P.	0

PROJET: W.W.T IQUALUIT

DIV.	CONTRAT	
E001	C2005-42	C1011

INGÉNIEUR CONSEIL
José Rhéaume
10C721
QUÉBEC

DIV	GRID LOC.	ELEV.
1	B'/4'-5'	+15.475

CERTIFIÉ ISO 9002

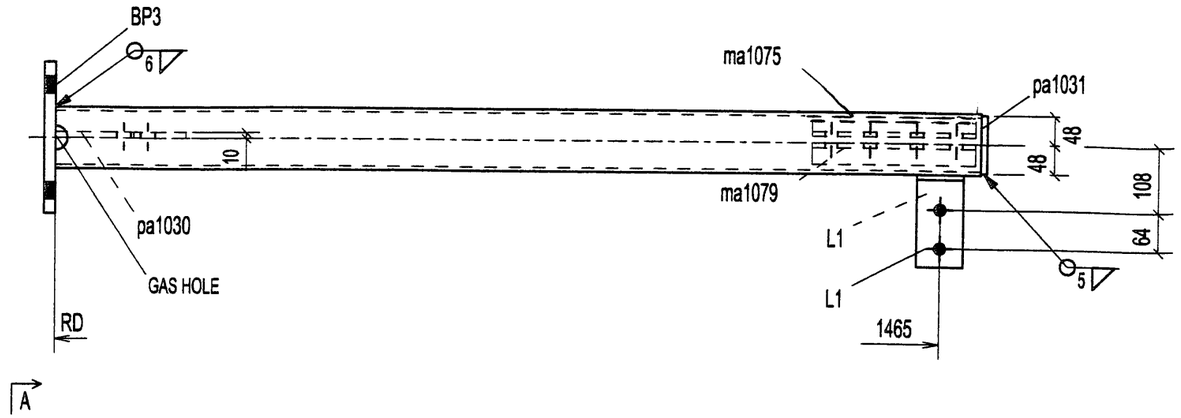

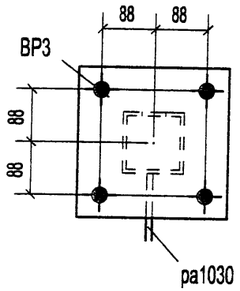

A - A

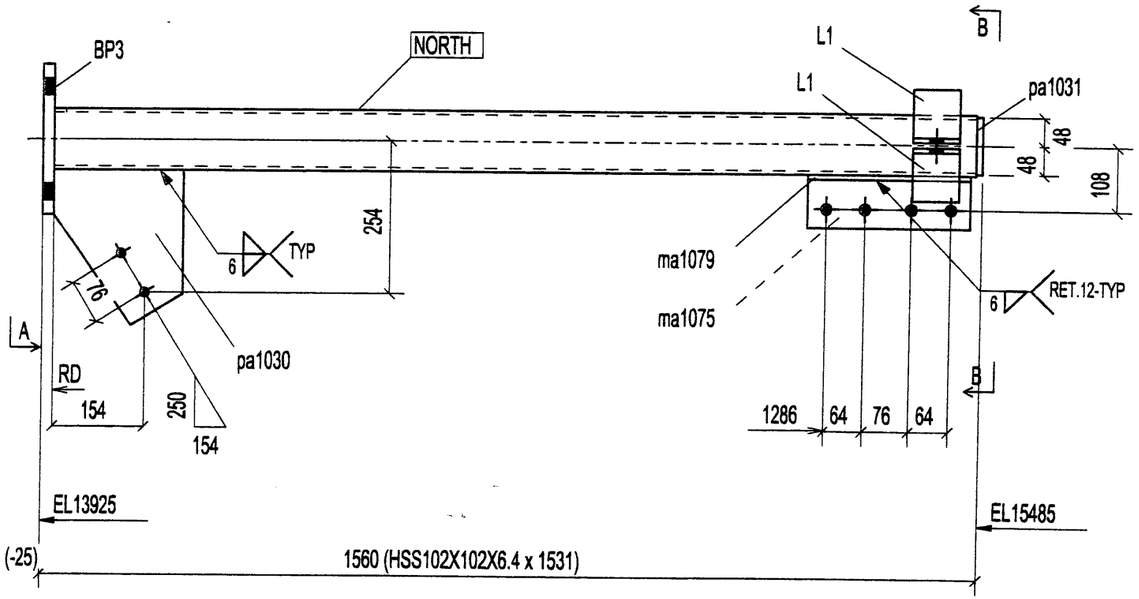

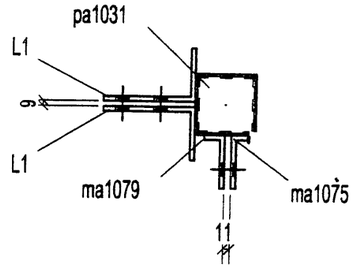

B - B

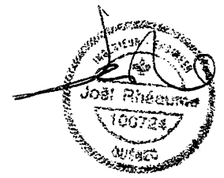

1 - COLUMN - C1012

1	C1012	COLUMN			
1	C1012	HSS102X102X6.4	1531	350W-GR-C	
1	BP3	PL19X250	250		
2	L1	L152X89X7.9	76		
1	ma1075	L89X64X7.9	268	CUT @ 25mm	
1	ma1079	L89X64X7.9	268	CUT @ 25mm	
1	pa1030	PL10X217.1	258		
1	pa1031	PL10X95.6	96		
QTE	MARQUE	DESCRIPTION	LONG.	REMARKS	

QTE	DESCRIPTION
	BOLT_3/4"DIA_A325_2"1/4
2	BOLT_5/8"DIA_A325_1"3/4
BOULONS DE CHANTIER	

QUEBEC METAL
330, DE L'ÉGLISE,
ST-ROMUALD,
QUÉBEC, G6W 5M6
Tel.:(418) 839-0969
Fax:(418) 839-3810
www.quebecmetal.com

REV.	DESCRIPTION	DATE	PAR
0	FOR APPROVAL	29-06-05	

TROUS	PEINTURE	ACIER
13/16 Ø U / N	GALVANIZED	300W U/N

DESSINER PAR	VÉRIFIER PAR	REV.
A.P. 06/29/2005	B.P.	0

PROJET: W.W.T IQUALUIT

DIV.	CONTRAT	
E001	C2005-42	C1012

DIV.	GRID LOC.	ELEV.
1	A'-B'/4'-5'	+15.475

CERTIFIÉ ISO 9002

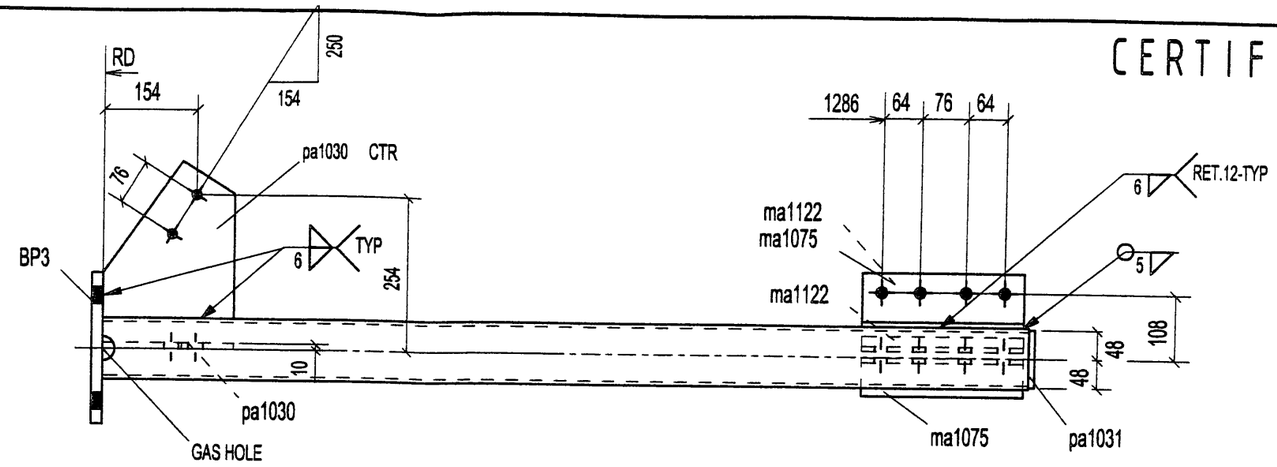

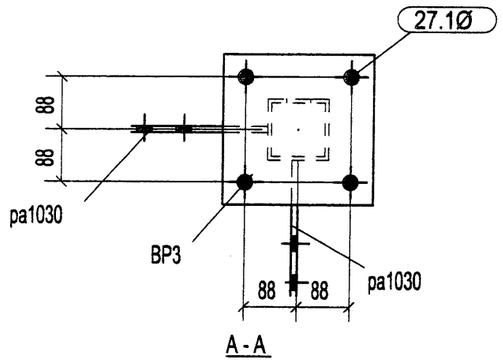

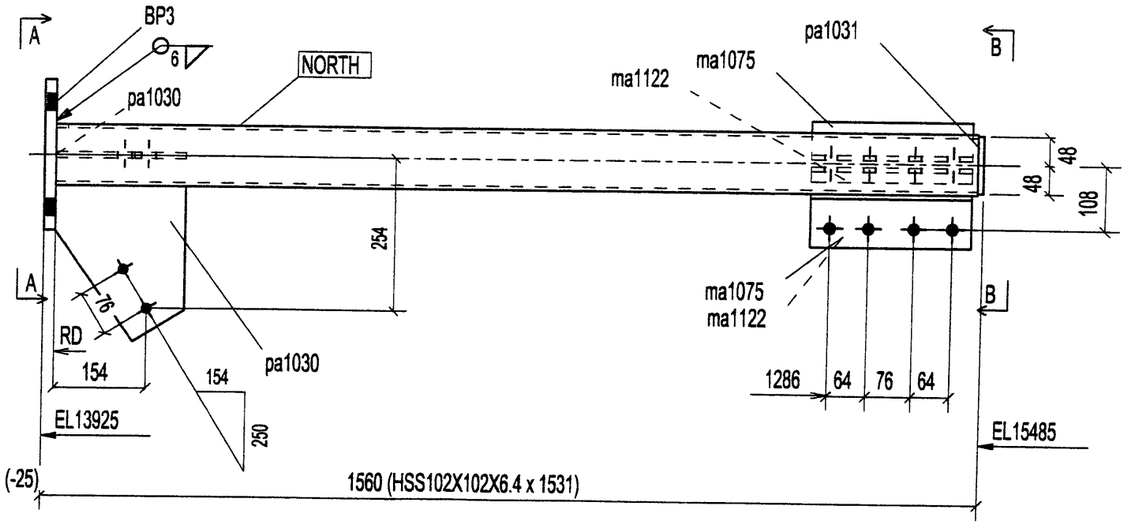

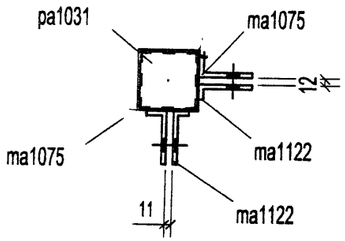

1 - COLUMN - C1013

QTE	MARQUE	DESCRIPTION	LONG.	REMARKS
1	C1013	COLUMN		
1	C1013	HSS102X102X6.4	1531	350W-GR-C
1	BP3	PL19X250	250	
2	ma1075	L89X64X7.9	268	CUT @ 25mm
2	ma1122	L89X64X7.9	268	CUT @ 25mm
2	pa1030	PL10X217.1	258	
1	pa1031	PL10X95.6	96	

QTE	DESCRIPTION
	BOLT_3/4"DIA_A325_2"1/4
4	BOLT_5/8"DIA_A325_1"3/4
BOULONS DE CHANTIER	

GUERO METAL
930, DE L'ÉGLISE,
ST-ROMUALD,
QUÉBEC, G6W 5M6
Tél.:(418) 839-0999
Fax:(418) 839-3810
www.guerometal.com

REV.	DESCRIPTION	DATE	PAR
0	FOR APPROVAL	29-06-05	

TROUS	PEINTURE	ACIER
13/16 Ø U / N	GALVANIZED	300W U/N

DESSINER PAR	VÉRIFIER PAR	REV.
A.P. 06/28/2005	B.P.	0

PROJET: W.W.T IQUALUIT

DIV.	CONTRAT	
E001	C2005-42	C1013

DIV	GRID LOC.	ELEV.
1	B'/3'	+15.475

CERTIFIÉ ISO 9002

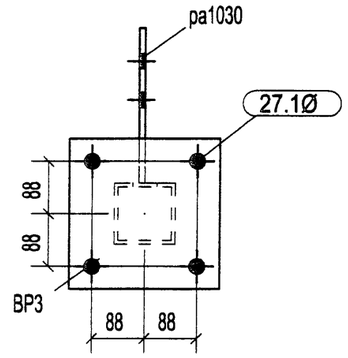

A - A

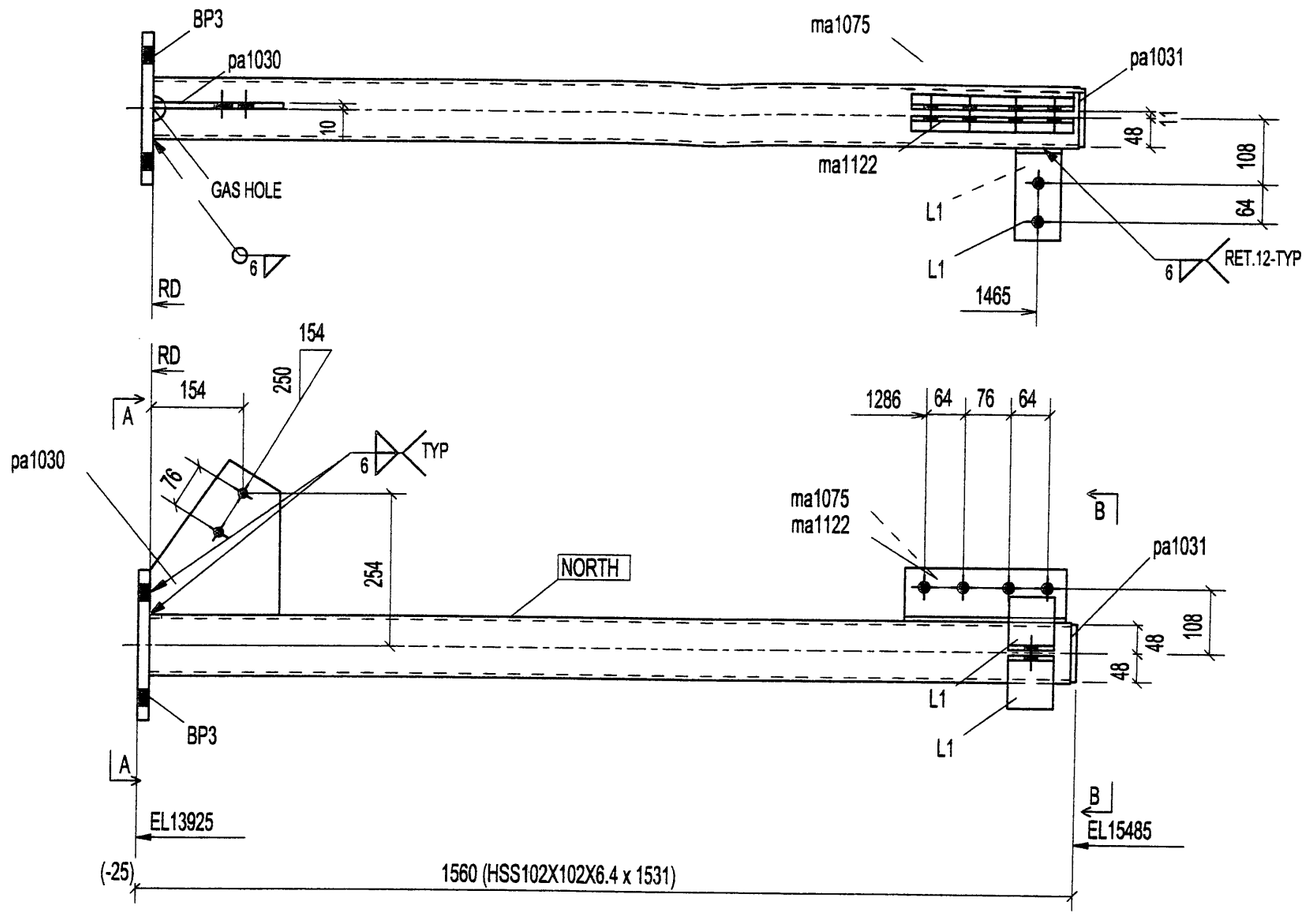

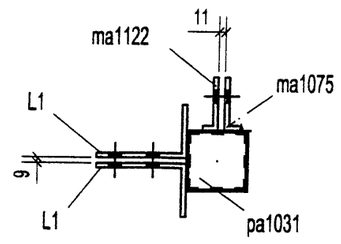

B - B

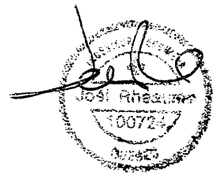

1 - COLUMN - C1014

1	C1014	COLUMN		
1	C1014	HSS102X102X6.4	1531	350W-GR-C
1	BP3	PL19X250	250	
2	L1'	L152X89X7.9	76	
1	ma1075	L89X64X7.9	268	CUT @ 25mm
1	ma1122	L89X64X7.9	268	CUT @ 25mm
1	pa1030	PL10X217.1	258	
1	pa1031	PL10X95.6	96	
QTE	MARQUE	DESCRIPTION	LONG.	REMARKS

.	BOLT_3/4"DIA_A325_2"1/4
2	BOLT_5/8"DIA_A325_1"3/4
QTE	DESCRIPTION
BOULONS DE CHANTIER	

QUÉBEC METAL
330, DE L'ÉGLISE,
ST-ROMUALD,
QUÉBEC, G6W 5M6
Tel.:(418) 839-3999
Fax:(418) 839-3810
www.quebecmetal.com

REV.	DESCRIPTION	DATE	PAR
0	FOR APPROVAL	29-06-05	

TROUS	PEINTURE	ACIER
13/16 Ø U / N	GALVANIZED	300W U/N

DESSINER PAR	VÉRIFIER PAR	REV.
A.P. 06/28/2005	B.P.	0

PROJET: W.W.T IQUALUIT

DIV.	CONTRAT	
E001	C2005-42	C1014

DIV	GRID LOC.	ELEV.
1	A'-B'/4'-5'	+15.304

CERTIFIÉ ISO 9002

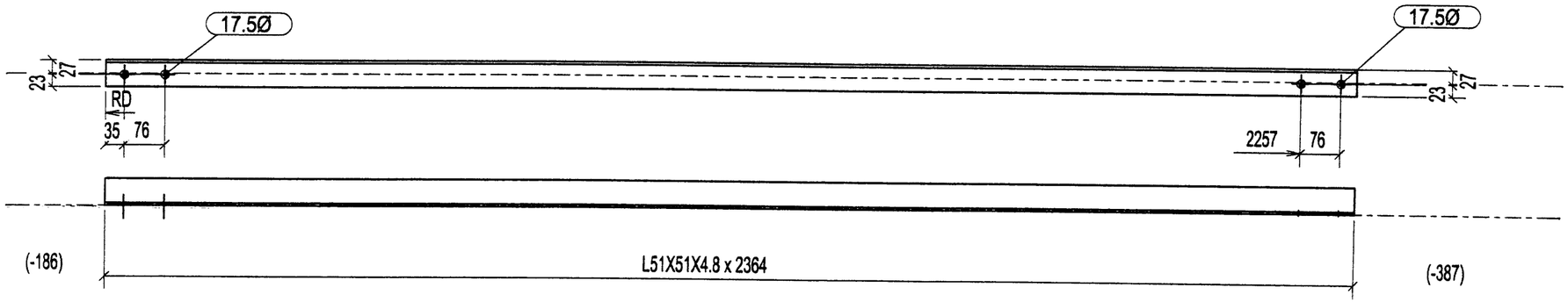

1 - BRACE - D1000

QTE	DESCRIPTION
BOULONS DE CHANTIER	

QTE	MARQUE	DESCRIPTION	LONG.	REMARKS
1	D1000	BRACE		
1	D1000	L51X51X4.8	2364	

QUEBEC METAL
330, DE L'ÉGLISE,
ST-ROMUALD,
QUÉBEC, G6W 5M6
Tél.:(418) 839-0999
Fax:(418) 839-3810
www.quebecmetal.com

REV.	DESCRIPTION	DATE	PAR
0	FOR APPROVAL	29-06-05	

TROUS	PEINTURE	ACIER	
13/16 Ø U / N	GALVANIZED	300W U/N	

DESSINER PAR	VÉRIFIER PAR	REV.
A.P. 06/28/2005	B.P.	0

PROJET: W.W.T IQUALUIT

DIV.	CONTRAT	
E001	C2005-42	D1000

DIV	GRID LOC.	ELEV.
1	A'-B'/5'	+16.624

CERTIFIÉ ISO 9002

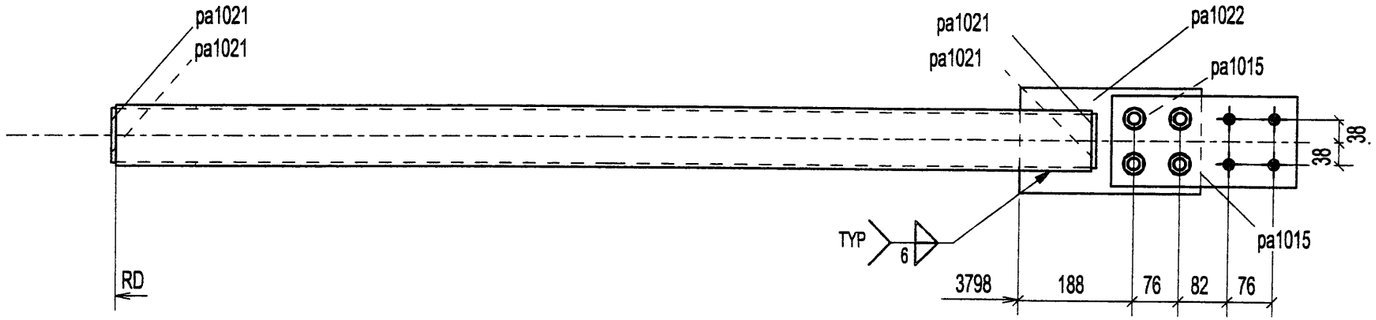

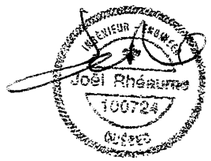

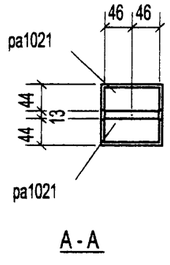

A - A

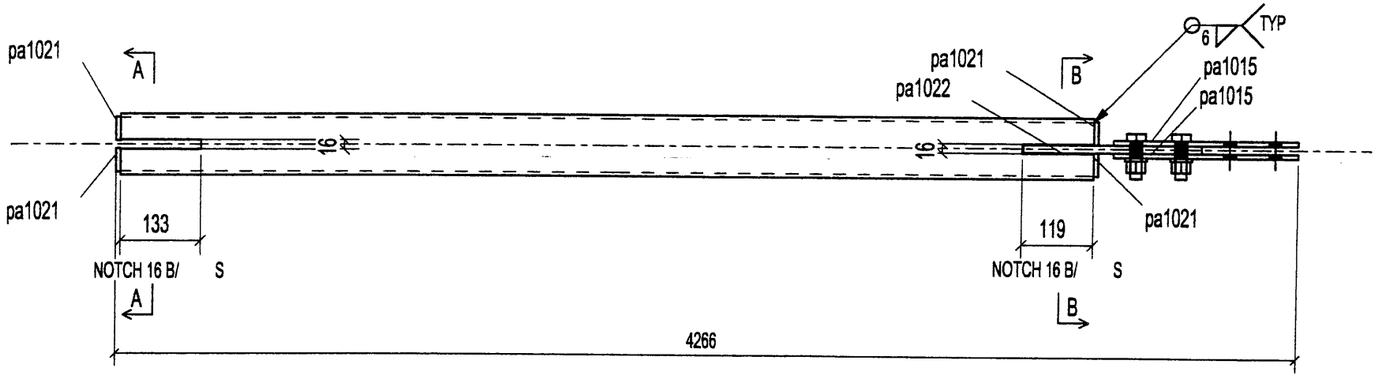

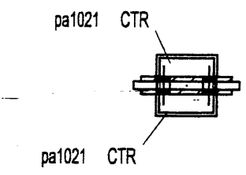

B - B

1 - BRACE - D1001

1	D1001	BRACE		
1	D1001	HSS102X102X6.4	3915	
2	pa1015	FL8X152	310	
4	pa1021	PL8X39	91	
1	pa1022	PL13X177	299	
4		BOLT_3/4"DIA_A325_2"1/2		

QTE	MARQUE	DESCRIPTION	LONG.	REMARKS

4	BOLT_3/4"DIA_A325_2"1/2
QTE	DESCRIPTION
BOULONS DE CHANTIER	

QUÉBEC METAL
800, DE L'ÉGLISE,
ST-ROMUALD,
QUÉBEC, G6W 5M6
Tel.:(418) 839-0999
Fax:(418) 839-3810
www.quebecmetal.com

REV.	DESCRIPTION	DATE	PAR
0	FOR APPROVAL	29-06-05	

TROUS	PEINTURE	ACIER
13/16 Ø U / N	GALVANIZED	300W U/N

DESSINER PAR	VÉRIFIER PAR	REV.
A.P. 06/28/2005	B.P.	0

PROJET: W.W.T IQUALUIT

DIV.	CONTRAT	
E001	C2005-42	D1001

DIV	GRID LOC.	ELEV.
1	C'/2'-3'	+17.135

CERTIFIÉ ISO 9002

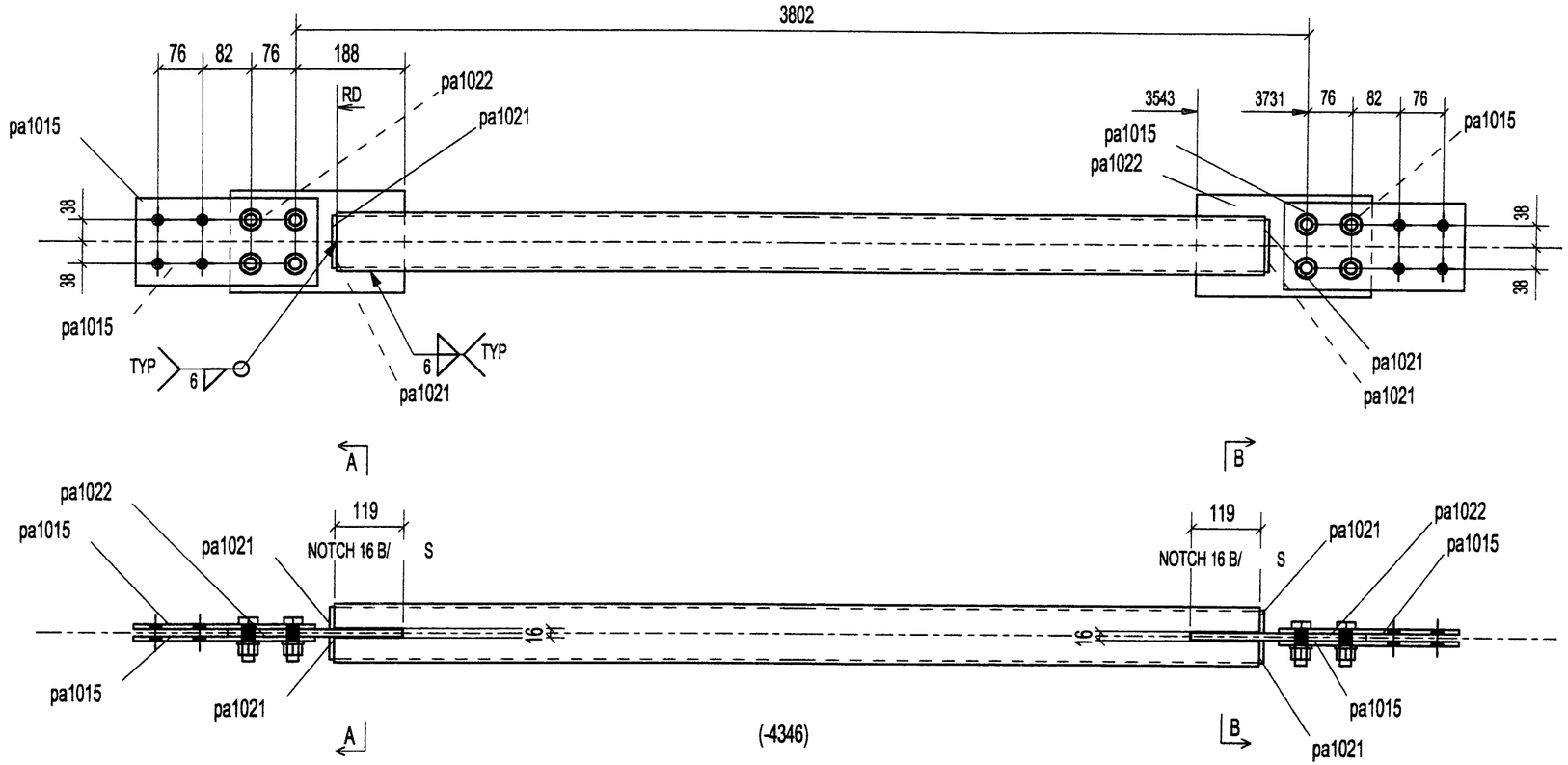

1 - BRACE - D1002

1	D1002	BRACE		
1	D1002	HSS102X102X6.4	3660	
4	pa1015	FL8X152	310	
4	pa1021	PL8X39	91	
2	pa1022	PL13X177	299	
4		BOLT_3/4"DIA_A325_2"1/2		
4		BOLT_3/4"DIA_A325_2"1/2		
QTE	MARQUE	DESCRIPTION	LONG.	REMARKS

8	BOLT_3/4"DIA_A325_2"1/2
QTE	DESCRIPTION
BOULONS DE CHANTIER	

QUÉBEC METAL
930, DE L'ÉGLISE,
ST-ROMUALD,
QUÉBEC, G6W 5M6
Tel.:(418) 839-0959
Fax:(418) 839-3810
www.quebecmetal.com

REV.	DESCRIPTION	DATE	PAR
0	FOR APPROVAL	29-06-05	

TROUS	PEINTURE	ACIER
13/16 Ø U/N	GALVANIZED	300W U/N

DESSINER PAR	VÉRIFIER PAR	REV.
A.P. 06/29/2005	B.P.	0

PROJET: W.W.T IQUALUIT

DIV.	CONTRAT	
E001	C2005-42	D1002

Joël Rhéaume 100724 QUÉBEC

DIV	GRID LOC.	ELEV.
1	A'/4'-5'	+16.726

CERTIFIÉ ISO 9002

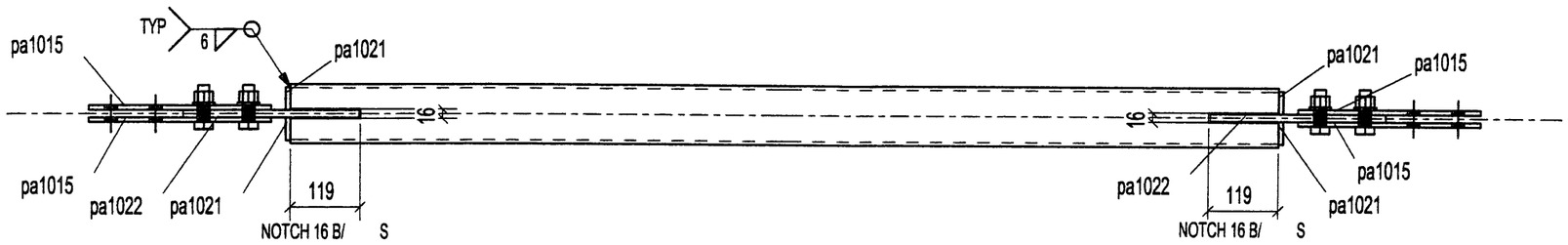

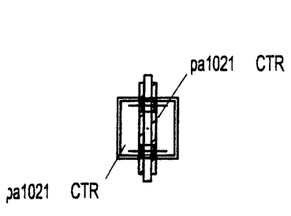

A - A

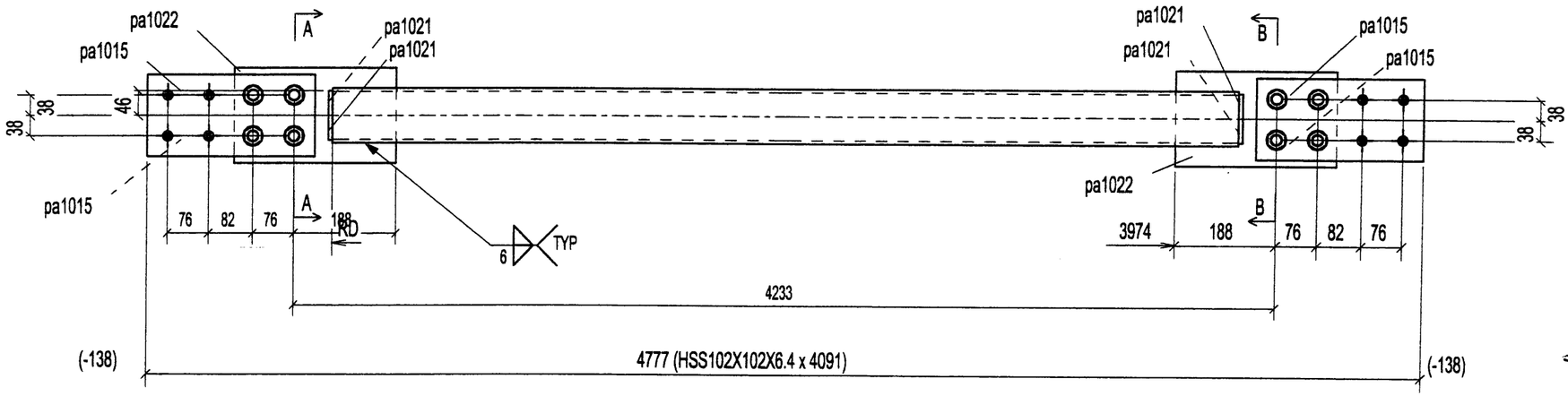

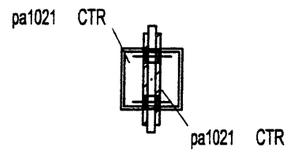

B - B

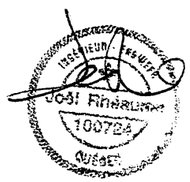

1 - BRACE - D1003

1	D1003	BRACE		
1	D1003	HSS102X102X6.4	4091	
4	pa1015	FL8X152	310	
4	pa1021	PL8X39	91	
2	pa1022	PL13X177	299	
4		BOLT_3/4"DIA_A325_2"1/2		
4		BOLT_3/4"DIA_A325_2"1/2		
QTE	MARQUE	DESCRIPTION	LONG.	REMARKS

8	BOLT_3/4"DIA_A325_2"1/2
QTE	DESCRIPTION
BOULONS DE CHANTIER	

QUÉRO METAL
900, DE L'ÉGLISE,
ST-ROMUALD,
QUÉBEC, G6W 5M6
Tel.:(418) 839-0999
Fax:(418) 839-3910
www.queremetal.com

0	FOR APPROVAL	29-06-05	
REV.	DESCRIPTION	DATE	PAR

TROUS	PEINTURE	ACIER	
13/16 Ø U / N	GALVANIZED	300W U/N	
DESSINER PAR: A.P. 06/29/2005	VÉRIFIER PAR: B.P.	REV.: 0	

PROJET: W.W.T IQUALUIT

DIV.	CONTRAT	
E001	C2005-42	D1003

DIV	GRID LOC.	ELEV.
1	A'-B'/5'	+17.994

CERTIFIÉ ISO 9002

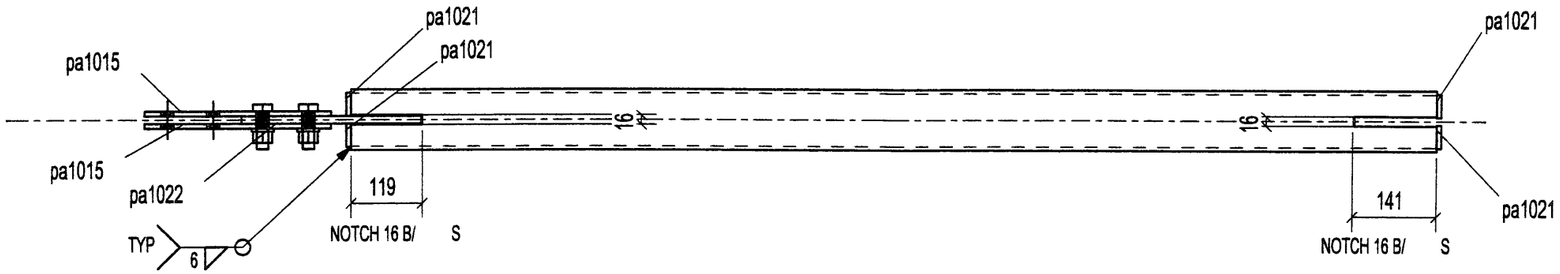

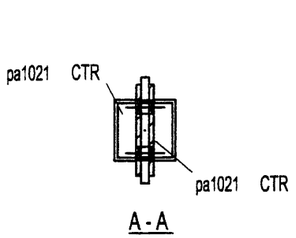

A - A

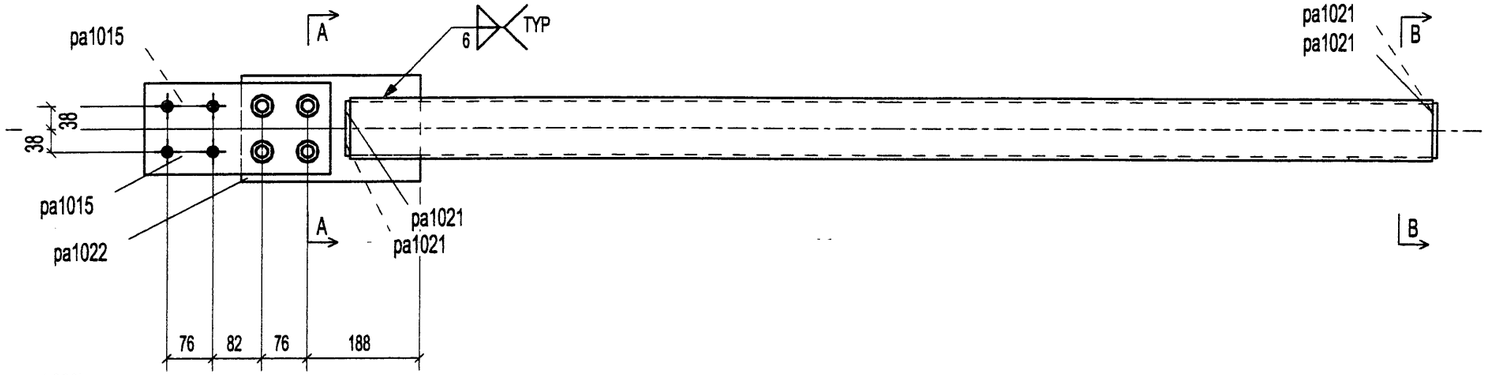

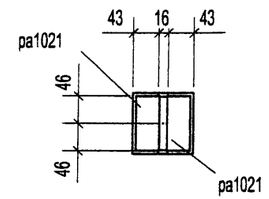

B - B

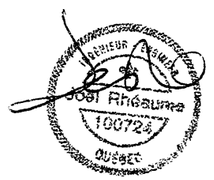

1 - BRACE - D1004

1	D1004	BRACE		
1	D1004	HSS102X102X6.4	4956	
2	pa1015	FL8X152	310	
4	pa1021	PL8X39	91	
1	pa1022	PL13X177	299	
4		BOLT_3/4"DIA_A325_2"1/2		
QTE	MARQUE	DESCRIPTION	LONG.	REMARKS

4	BOLT_3/4"DIA_A325_2"1/2
QTE	DESCRIPTION
BOULONS DE CHANTIER	

QUÉBEC METAL
930, DE L'ÉGLISE,
ST-ROMUALD,
QUÉBEC, G6W 5M6
Tel.:(418) 839-0999
Fax:(418) 835-3910
www.quebecmetal.com

REV.	DESCRIPTION	DATE	PAR
0	FOR APPROVAL	29-06-05	

TROUS	PEINTURE	ACIER	
13/16 Ø U/N	GALVANIZED	300W U/N	

DESSINER PAR	VÉRIFIER PAR	REV.
A.P. 06/28/2005	B.P.	0

PROJET: W.W.T IQUALUIT

DIV	CONTRAT	
E001	C2005-42	D1004

DIV	GRID LOC.	ELEV.
1	A'-B'/3'	+15.308
1	A'-B'/3'	+15.308

CERTIFIÉ ISO 9002

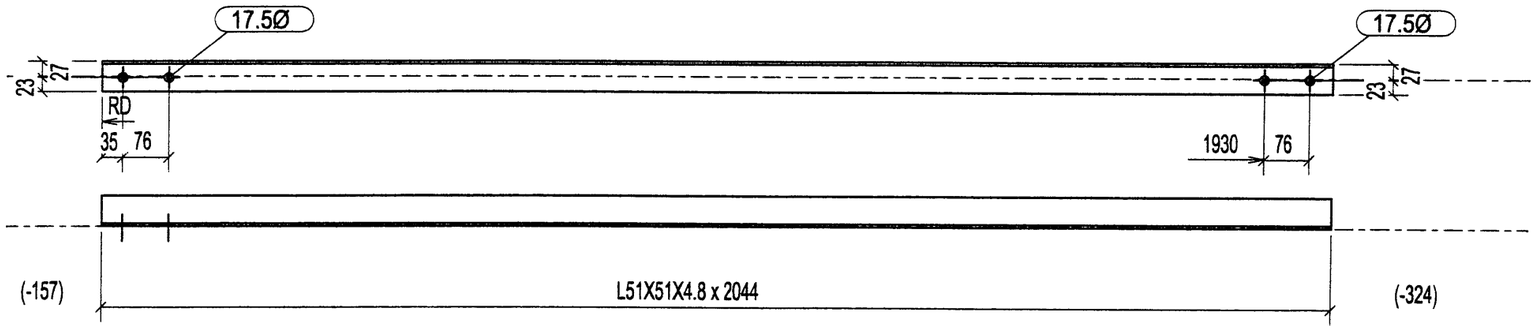

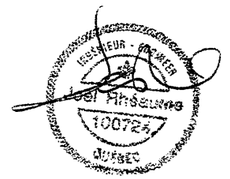

2 - BRACE - D1005

QTE	DESCRIPTION
BOULONS DE CHANTIER	

QTE	MARQUE	DESCRIPTION	LONG.	REMARKS
2	D1005	BRACE		
2	D1005	L51X51X4.8	2044	

QUÉBEC METAL
930, DE L'ÉGLISE,
ST-ROMUALD,
QUÉBEC, G6W 5M6
Tel.:(418) 839-0999
Fax:(418) 839-3810
www.quebecmetal.com

REV.	DESCRIPTION	DATE	PAR
0	FOR APPROVAL	29-06-05	

TROUS	PEINTURE	ACIER
13/16 Ø U/N	GALVANIZED	300W U/N

DESSINER PAR	VÉRIFIER PAR	REV.
A.P. 06/28/2005	B.P.	0

PROJET: W.W.T IQUALUIT

DIV.	CONTRAT	
E001	C2005-42	D1005

DIV	GRID LOC.	ELEV.
1	A'-B'/3'-5'	+15.308
1	B'/3'-5'	+15.308
1	B'/4'-5'	+15.308

CERTIFIÉ ISO 9002

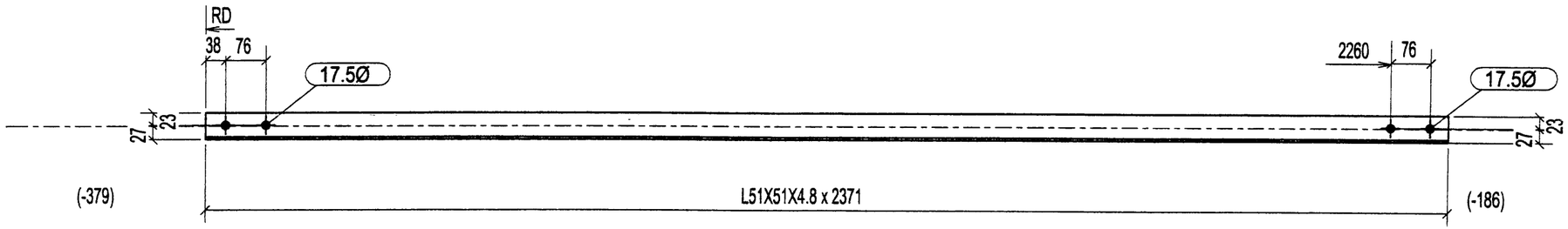

3 - BRACE - D1006

QTE	DESCRIPTION
BOULONS DE CHANTIER	

QTE	MARQUE	DESCRIPTION	LONG.	REMARKS
3	D1006	BRACE		
3	D1006	L51X51X4.8	2371	

QUÉRO METAL
930, DE L'ÉGLISE,
ST-ROMUALD,
QUÉBEC, G6W 5M6
Tel.:(418) 839-0969
Fax:(418) 839-3810
www.querometal.com

REV.	DESCRIPTION	DATE	PAR
0	FOR APPROVAL	29-06-05	

TROUS	PEINTURE	ACIER
13/16 Ø U/N	GALVANIZED	300W U/N

DESSINER PAR	VÉRIFIER PAR	REV.
A.P. 06/28/2005	B.P.	0

PROJET: W.W.T IQUALUIT

DIV.	CONTRAT	
E001	C2005-42	D1006

DIV	GRID LOC.	ELEV.
1	A'-B'/4'-5'	+15.308
1	A'-B'/4'-5'	+15.308

CERTIFIÉ ISO 9002

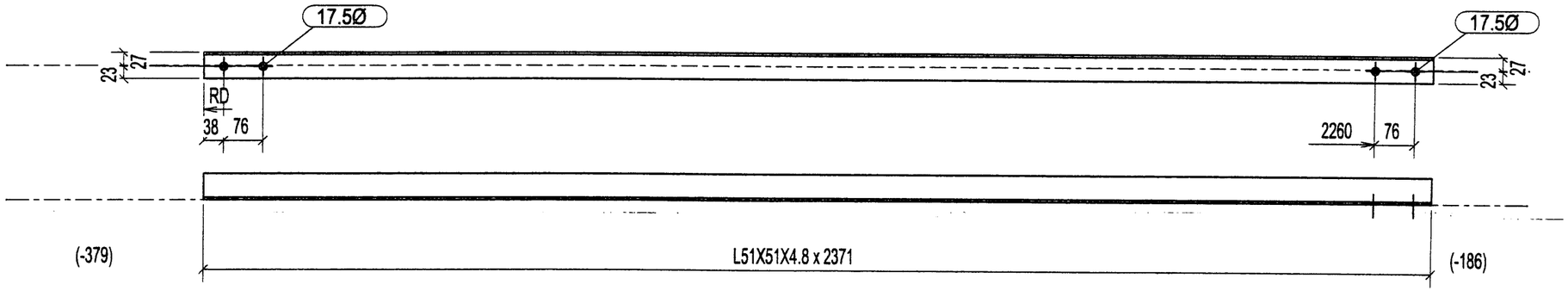

2 - BRACE - D1009

QTE	DESCRIPTION
BOULONS DE CHANTIER	

QTE	MARQUE	DESCRIPTION	LONG.	REMARKS
2	D1009	BRACE		
2	D1009	L51X51X4.8	2371	

QUÉRO METAL
930, DE L'ÉGLISE,
ST-ROMUALD,
QUÉBEC, G6W 5M6
Tel:(418) 839-0369
Fax:(418) 839-3810
www.queometal.com

REV.	DESCRIPTION	DATE	PAR
0	FOR APPROVAL	29-06-05	

TROUS	PEINTURE	ACIER
13/16 Ø U / N	GALVANIZED	300W U/N

DESSINER PAR	VÉRIFIER PAR	REV.
A.P. 06/29/2005	B.P.	0

PROJET: W.W.T IQUALUIT

DIV.	CONTRAT	
E001	C2005-42	D1009

DIV	GRID LOC.	ELEV.
1	C'/4'-5'	+16.566

CERTIFIÉ ISO 9002

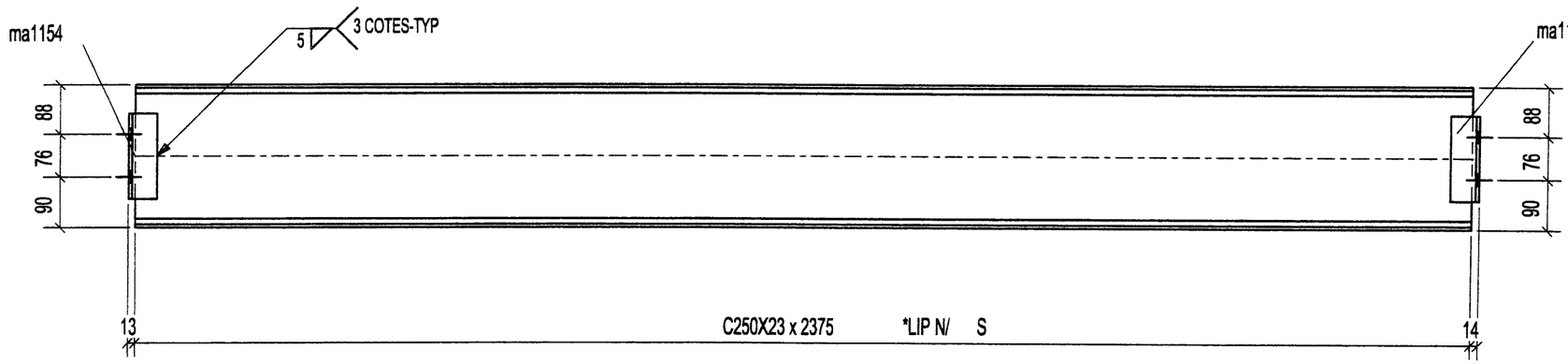

1 - FRAME - G1000

1	G1000	FRAME		
1	G1000	C250X23	2375	
2	ma1154	L76X51X6.4	152	

QTE	MARQUE	DESCRIPTION	LONG.	REMARKS

QTE	DESCRIPTION
BOULONS DE CHANTIER	

QUEBEC METAL
930, DE L'ÉGLISE,
ST-ROMUALD,
QUÉBEC, G6W 5M6
Tel.:(418) 839-0959
Fax:(418) 839-3810
www.quebecmetal.com

REV.	DESCRIPTION	DATE	PAR
0	FOR APPROVAL	29-06-05	

TROUS	PEINTURE	ACIER
13/16 Ø U / N	GALVANIZED	300W U/N

DESSINER PAR	VÉRIFIER PAR	REV.
A.P. 06/29/2005	B.P	0

PROJET: W.W.T IQUALUIT

DIV.	CONTRAT	
E001	C2005-42	G1000

DIV	GRID LOC.	ELEV.
1	C'/4'-5'	+17.634

CERTIFIÉ ISO 9002

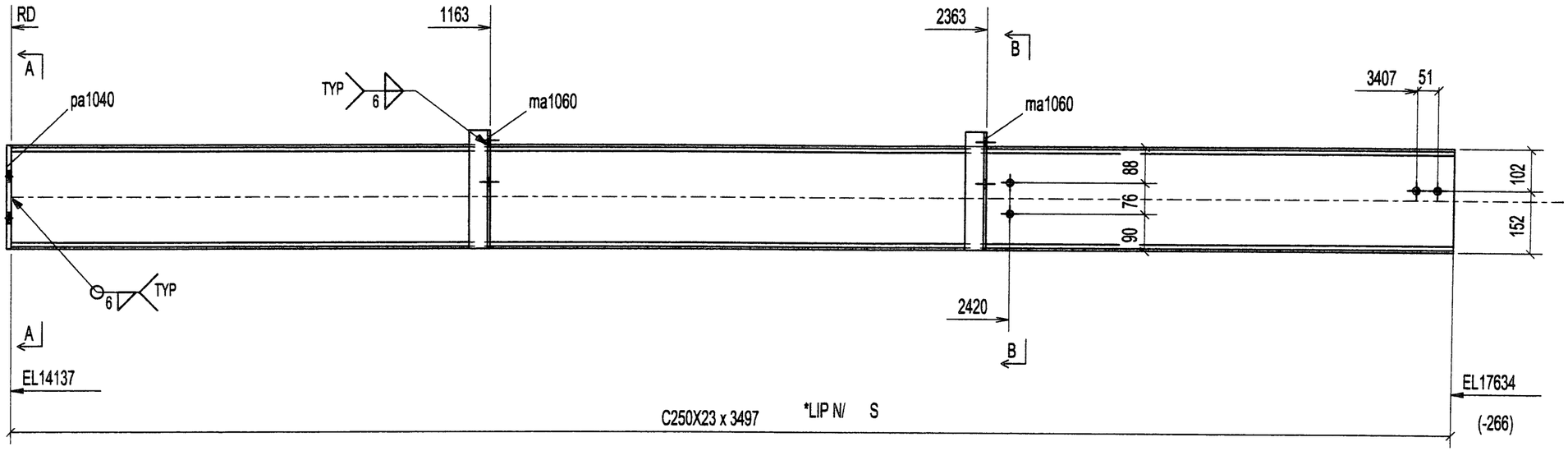

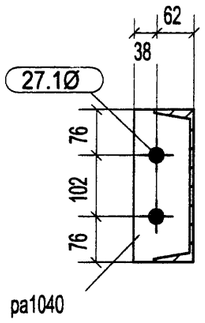

A - A

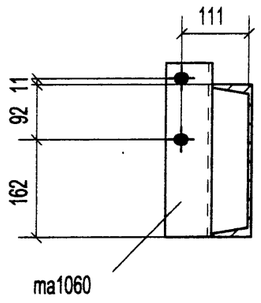

B - B

1 - FRAME - G1001

1	G1001	FRAME		
1	G1001	C250X23	3497	
2	ma1060	L76X51X6.4	290	
1	pa1040	PL 12X100	254	
QTE	MARQUE	DESCRIPTION	LONG.	REMARKS

4	BOLT_3/4"DIA_A325_1"3/4
QTE	DESCRIPTION
BOULONS DE CHANTIER	

QUEBEC METAL INC.
930, DE L'ÉGLISE,
ST-ROMUALD,
QUÉBEC, G6W 5M6
Tel.:(418) 839-3969
Fax:(418) 839-3810
www.quebecmetal.com

REV.	DESCRIPTION	DATE	PAR
0	FOR APPROVAL	29-06-05	

TROUS	PEINTURE	ACIER
13/16 Ø U / N	GALVANIZED	300W U/N

DESSINER PAR	VÉRIFIER PAR	REV.
A.P. 06/28/2005	B.P.	0

PROJET: W.W.T IQUALUIT

DIV.	CONTRAT	
E001	C2005-42	G1001

DIV	GRID LOC.	ELEV.
1	A'/1'-3'	+15.389
1	A'/1'-3'	+16.589

CERTIFIÉ ISO 9002

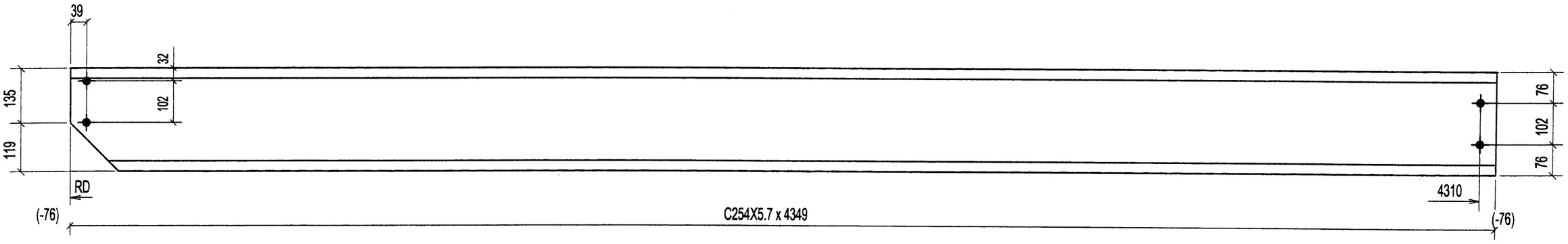

2 - GIRT - G1002

4	BOLT_3/4"DIA_A325_1"3/4
QTE	DESCRIPTION
BOULONS DE CHANTIER	

2	G1002	GIRT		
2	G1002	C254X5.7	4349	
QTE	MARQUE	DESCRIPTION	LONG.	REMARKS

GUÉRO MÉTAL
930, DE L'ÉGLISE,
ST-ROMUALD,
QUÉBEC, G6W 5M6
Tel.:(418) 839-0999
Fax:(418) 839-3810
www.querometal.com

REV.	DESCRIPTION	DATE	PAR
0	FOR APPROVAL	29-06-05	

TROUS	PEINTURE	ACIER	
13/16 Ø U/N	GALVANIZED	300W U/N	
DESSINER PAR: A.P. 06/29/2005	VÉRIFIER PAR: B.P.	REV.: 0	

PROJET: W.W.T IQUALUIT

DIV.	CONTRAT	
E001	C2005-42	G1002

DIV	GRID LOC.	ELEV.
1	C'/4'-5'	+15.389
1	C'/4'-5'	+16.589

CERTIFIÉ ISO 9002

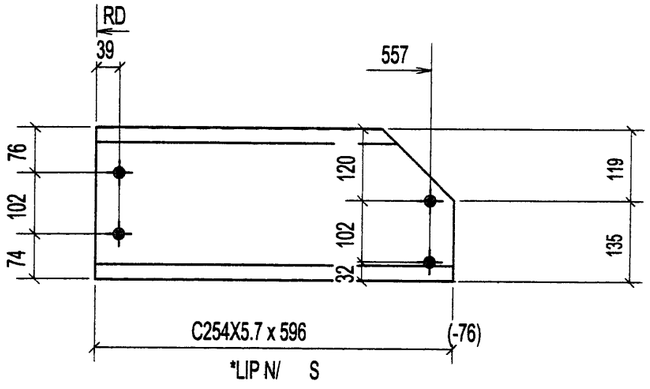

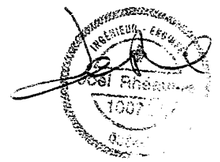

2 - GIRT - G1003

4	BOLT_3/4"DIA_A325_1"3/4					
QTE	DESCRIPTION					
BOULONS DE CHANTIER						

2	G1003	GIRT		
2	G1003	C254X5.7	596	
QTE	MARQUE	DESCRIPTION	LONG.	REMARKS

EURO METAL
830, DE L'ÉGLISE,
ST-ROMUALD,
QUÉBEC, G6W 5M6
Tel.:(418) 839-0999
Fax:(418) 839-3810
www.eurometal.com

REV.	DESCRIPTION	DATE	PAR
0	FOR APPROVAL	29-06-05	

TROUS	PEINTURE	ACIER
13/16 Ø U / N	GALVANIZED	300W U/N

DESSINER PAR	VÉRIFIER PAR	REV.
A.P. 06/29/2005	B.P.	0

PROJET: W.W.T IQUALUIT

DIV.	CONTRAT	
E001	C2005-42	G1003

DIV	GRID LOC.	ELEV.
1	C'/4'-5'	+15.389
1	C'/4'-5'	+16.589

CERTIFIÉ ISO 9002

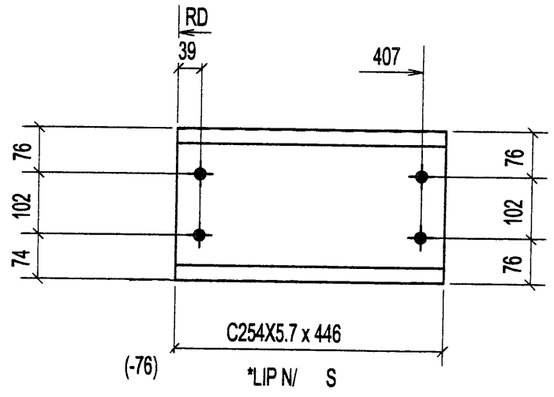

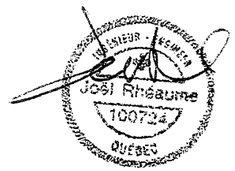

2 - GIRT - G1004

4	BOLT_3/4"DIA_A325_1"3/4
QTE	DESCRIPTION
BOULONS DE CHANTIER	

QTE	MARQUE	DESCRIPTION	LONG.	REMARKS
2	G1004	GIRT		
2	G1004	C254X5.7	446	

QUÉBEC METAL
830, DE L'ÉGLISE,
ST-ROMUALD,
QUÉBEC, G6W 5M6
Tel.:(418) 839-3999
Fax:(418) 839-3810
www.quebecmetal.com

REV.	DESCRIPTION	DATE	PAR
0	FOR APPROVAL	29-06-05	

TROUS	PEINTURE	ACIER
13/16 Ø U / N	GALVANIZED	300W U/N

DESSINER PAR	VÉRIFIER PAR	REV.
A.P. 06/29/2005	B.P.	0

PROJET W.W.T IQUALUIT

DIV.	CONTRAT	
E001	C2005-42	G1004

DIV	GRID LOC.	ELEV.
1	C'/2'-4'	+15.389

CERTIFIÉ ISO 9002

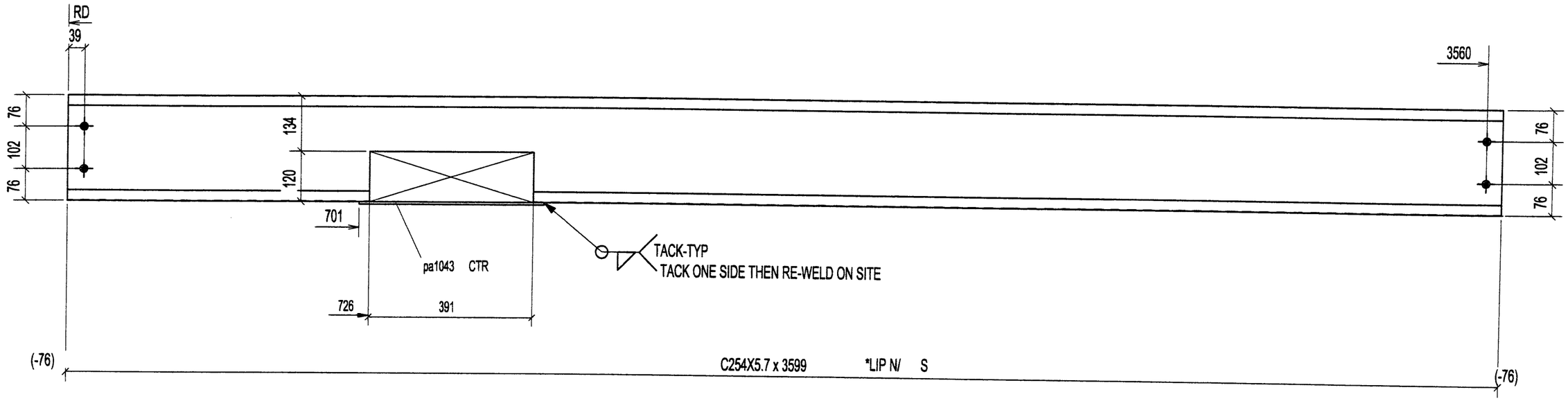

1 - GIRT - G1005

QTE	MARQUE	DESCRIPTION	LONG.	REMARKS
1	G1005	GIRT		
1	G1005	C254X5.7	3599	
1	pa1043	FL6X89	441	

QTE	DESCRIPTION
4	BOLT_3/4"DIA_A325_1"3/4

BOULONS DE CHANTIER

GUERO METAL
839, DE L'ÉGLISE,
ST-ROMUALD,
QUÉBEC, G6W 5M6
Tél.:(418) 839-0999
Fax:(418) 839-3810
www.guerometal.com

REV.	DESCRIPTION	DATE	PAR
0	FOR APPROVAL	29-06-05	

TROUS	PEINTURE	ACIER
13/16 Ø U / N	GALVANIZED	300W U/N

DESSINER PAR	VÉRIFIER PAR	REV.
A.P. 06/28/2005	B.P.	0

PROJET: W.W.T IQUALUIT

DIV.	CONTRAT	
F001	C2005-42	G1006

DIV	GRID LOC.	ELEV.
1	A'-B'/5'	+15.389

CERTIFIÉ ISO 9002

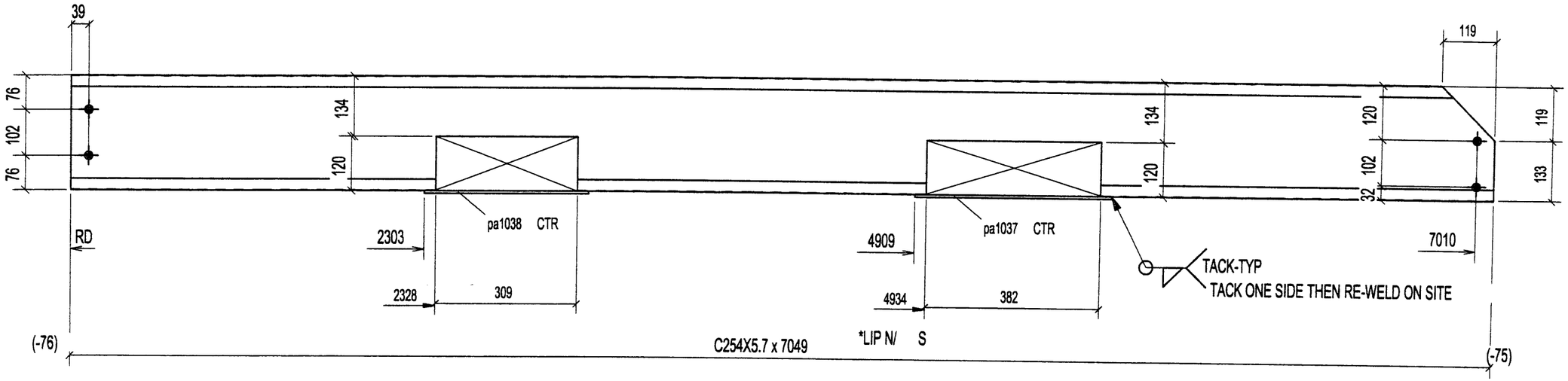

1 - GIRT - G1006

1	G1006	GIRT		
1	G1006	C254X5.7	7049	
1	pa1037	FL6X89	432	
1	pa1038	FL6X89	359	
QTE	MARQUE	DESCRIPTION	LONG.	REMARKS

4	BOLT_3/4"DIA_A325_1"3/4
QTE	DESCRIPTION
BOULONS DE CHANTIER	

930, DE L'ÉGLISE,
ST-ROMUALD,
QUÉBEC, G6W 5M6
Tel.:(418) 839-0999
Fax:(418) 839-3810
www.querometal.com

REV.	DESCRIPTION	DATE	PAR
0	FOR APPROVAL	29-06-05	

TROUS: 13/16 Ø U/N	PEINTURE: GALVANIZED	ACIER: 300W U/N	
DESSINER PAR: A.P. 06/28/2005	VÉRIFIER PAR: B.P	REV.: 0	

PROJET: W.W.T IQUALUIT

DIV.	CONTRAT	
E001	C2005-42	G1006

DIV	GRID LOC.	ELEV.
1	C'/4'-5'	+17.634

CERTIFIÉ ISO 9002

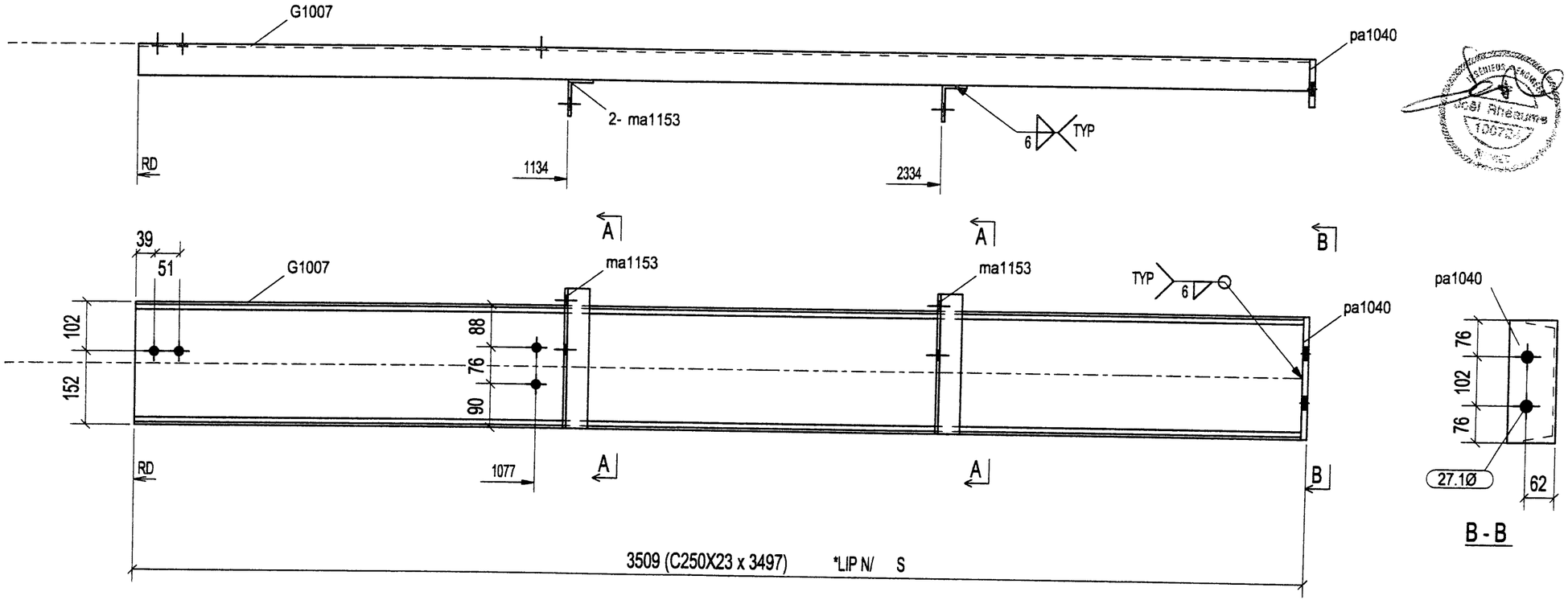

1 - FRAME - G1007

QTE	MARQUE	DESCRIPTION	LONG.	REMARKS
1	G1007	FRAME		
1	G1007	C250X23	3497	
2	ma1153	L76X51X6.4	290	
1	pa1040	PL 12X100	254	

QTE	DESCRIPTION
4	BOLT_3/4"DIA_A325_1"3/4
BOULONS DE CHANTIER	

QUEBEC METAL
930, DE L'ÉGLISE,
ST-ROMUALD,
QUÉBEC, G6W 5M6
Tél.:(418) 839-0999
Fax:(418) 839-3810
www.quebecmetal.com

REV.	DESCRIPTION	DATE	PAR
0	FOR APPROVAL	29-06-05	

TROUS	PEINTURE	ACIER
13/16 Ø U / N	PAINT NOTE	300W U/N

DESSINER PAR	VÉRIFIER PAR	REV.
INIT 06/29/2005	B.P.	0

PROJET W.W.T IQUALUIT

DIV.	CONTRAT	
E???	C2005-42	G1007

DIV	GRID LOC.	ELEV.
1	A'-B'/1'	+15.389
1	A'-B'/1'	+16.589

CERTIFIÉ ISO 9002

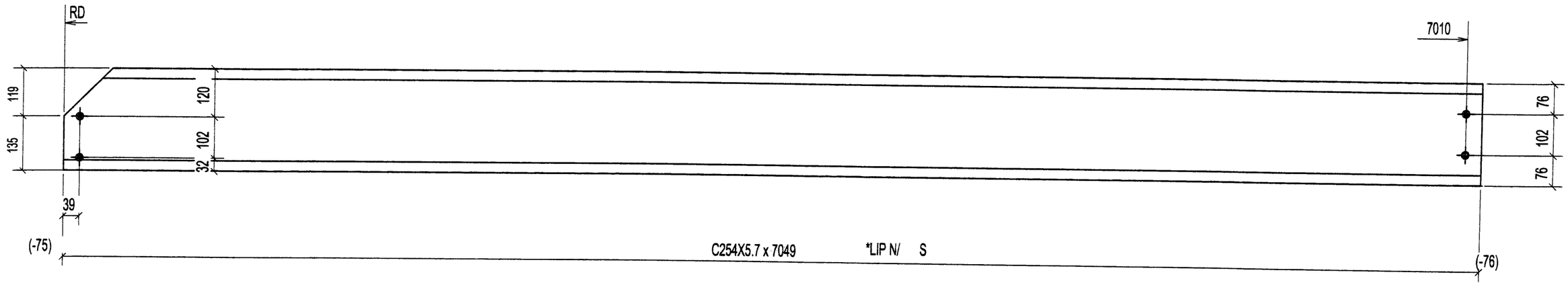

2 - GIRT - G1008

4	BOLT_3/4"DIA_A325_1"3/4
QTE	DESCRIPTION
BOULONS DE CHANTIER	

QTE	MARQUE	DESCRIPTION	LONG.	REMARKS
2	G1008	GIRT		
2	G1008	C254X5.7	7049	

QUEBEC METAL
930, DE L'ÉGLISE,
ST-ROMUALD,
QUÉBEC, G6W 5M6
Tel.:(418) 839-3999
Fax:(418) 839-3810
www.quebecmetal.com

REV.	DESCRIPTION	DATE	PAR
0	FOR APPROVAL	29-06-05	

TROUS	PEINTURE	ACIER
13/16 Ø U / N	GALVANIZED	300W U/N

DESSINER PAR	VÉRIFIER PAR	REV.
A.P. 06/28/2005	B.P.	0

PROJET: W.W.T IQUALUIT

DIV.	CONTRAT	
E001	C2005-42	G1008

DIV	GRID LOC.	ELEV.
1	A'-B'/1'	+17.391

CERTIFIÉ ISO 9002

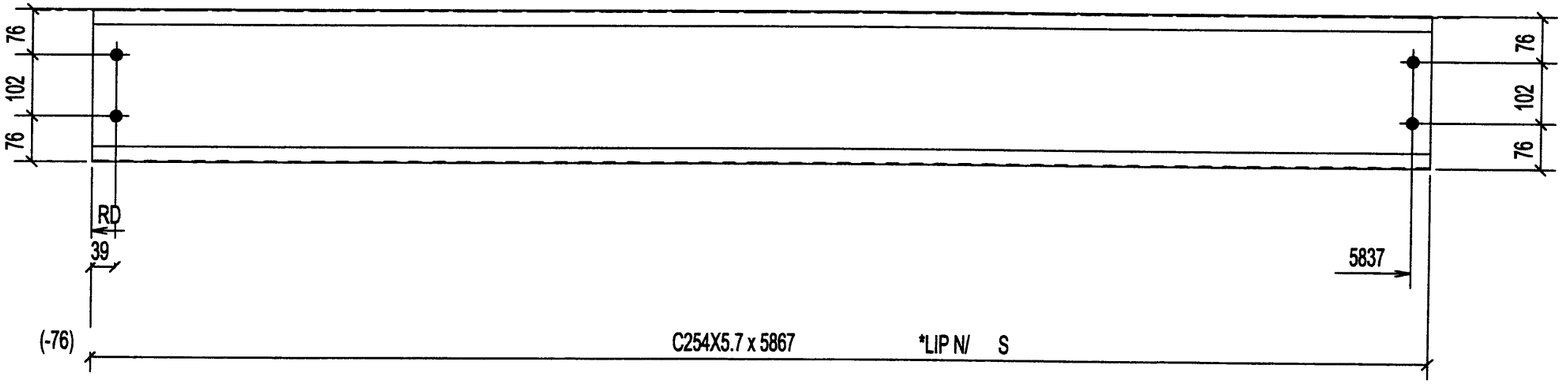

4-07-2005

1 - GIRT - G1009

2	BOLT_3/4"DIA_A325_1"3/4
QTE	DESCRIPTION
BOULONS DE CHANTIER	

QTE	MARQUE	DESCRIPTION	LONG.	REMARKS
1	G1009	GIRT		
1	G1009	C254X5.7	5867	

REV.	DESCRIPTION	DATE	PAR
0	FOR APPROVAL	05-07-05	

TROUS	PEINTURE	ACIER
13/16 Ø U/N	GALVANIZED	300W U/N

DESSINER PAR	VÉRIFIER PAR	REV.
A.P. 07/05/2005	B.P.	0

PROJET W.W.T IQUALUIT

DIV.	CONTRAT	
F001	C2005-42	G1009

EURO METAL
830, DE L'ÉGLISE,
ST-ROMUALD,
QUÉBEC, G6W 5M6
Tel.:(418) 839-0999
Fax:(418) 839-3810

DIV	GRID LOC.	ELEV.
1	A'-B'/5'	+16.589

CERTIFIÉ ISO 9002

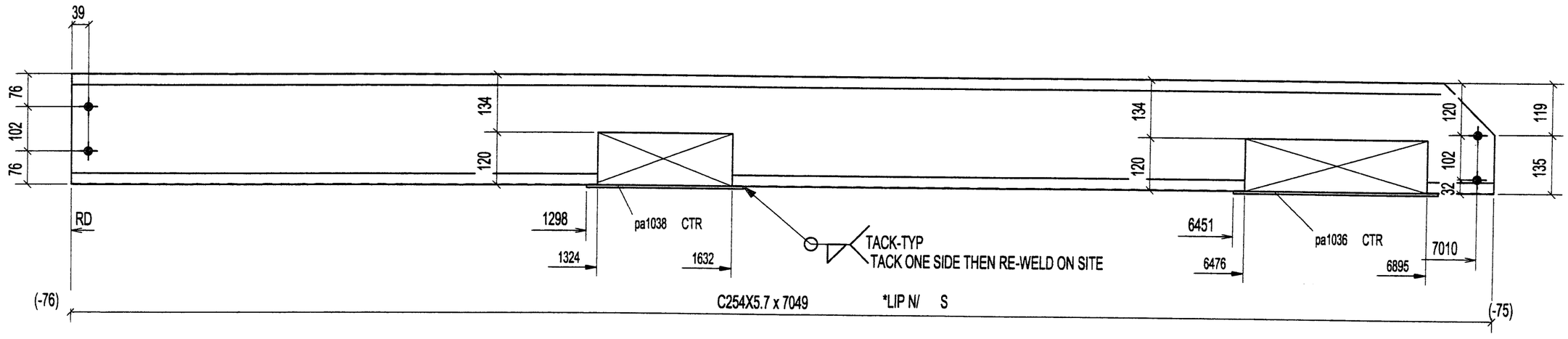

1 - GIRT - G1010

QTE	MARQUE	DESCRIPTION	LONG.	REMARKS
1	G1010	GIRT		
1	G1010	C254X5.7	7049	
1	pa1036	FL6X89	468	
1	pa1038	FL6X89	359	

QTE	DESCRIPTION
4	BOLT_3/4"DIA_A325_1"3/4
BOULONS DE CHANTIER	

QUÉRO METAL
930, DE L'ÉGLISE,
ST-ROMUALD,
QUÉBEC, G6W 5M6
Tel.:(418) 839-0999
Fax:(418) 835-3910
www.querometal.com

REV.	DESCRIPTION	DATE	PAR
0	FOR APPROVAL	29-06-05	

TROUS	PEINTURE	ACIER
13/16 Ø U / N	GALVANIZED	300W U/N

DESSINER PAR	VÉRIFIER PAR	REV.
A.P. 06/28/2005	B.P.	0

PROJET: W.W.T IQUALUIT

DIV.	CONTRAT	
E001	C2005-42	G1010

DIV	GRID LOC.	ELEV.
1	A'-B'/5'	+17.391

CERTIFIÉ ISO 9002

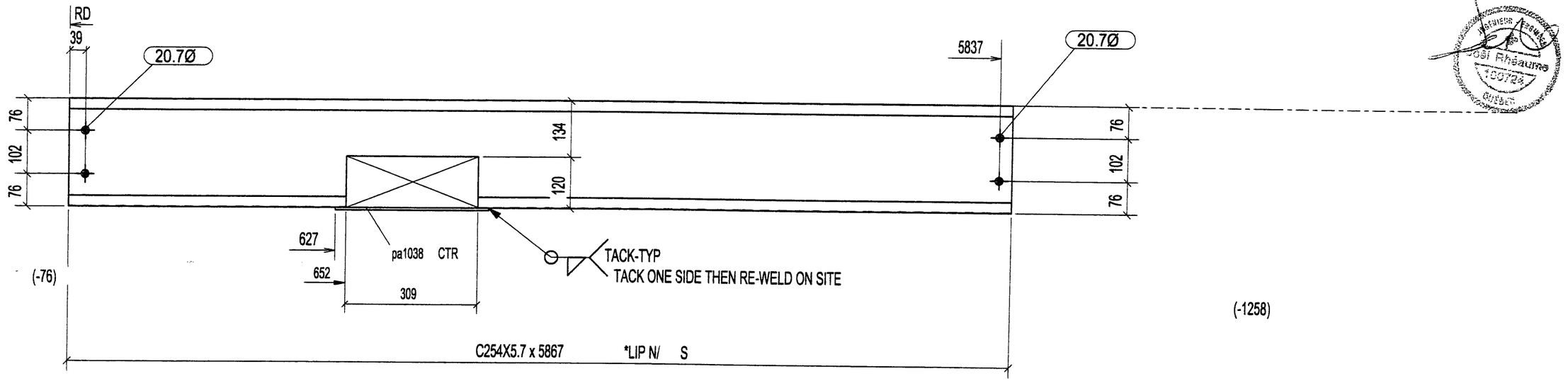

1 - GIRT - G1011

2	BOLT_3/4"DIA_A325_1"3/4
QTE	DESCRIPTION
BOULONS DE CHANTIER	

QTE	MARQUE	DESCRIPTION	LONG.	REMARKS
1	G1011	GIRT		
1	G1011	C254X5.7	5867	
1	pa1038	FL6X89	359	

QUEBEC METAL INC.
930, DE L'ÉGLISE,
ST-ROMUALD,
QUÉBEC, G6W 5M6
Tel.:(418) 839-0999
Fax:(418) 839-3810
www.quebecmetal.com

REV.	DESCRIPTION	DATE	PAR
0	FOR APPROVAL	29-06-05	

TROUS	PEINTURE	ACIER
13/16 Ø U / N	GALVANIZED	300W U/N

DESSINER PAR	VÉRIFIER PAR	REV
A.P. 06/28/2005	B.P.	0

PROJET: W.W.T IQUALUIT

DIV.	CONTRAT	
E001	C2005-42	G1011

DIV	GRID LOC.	ELEV.
1	B'-C'/5'	+17.510

CERTIFIÉ ISO 9002

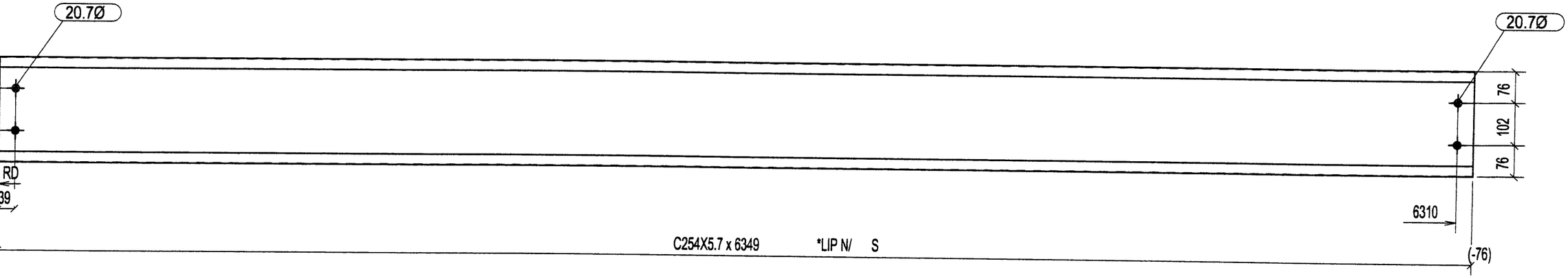

1 - GIRT - G1012

4	BOLT_3/4"DIA_A325_1"3/4
QTE	DESCRIPTION
BOULONS DE CHANTIER	

QTE	MARQUE	DESCRIPTION	LONG.	REMARKS
1	G1012	GIRT		
1	G1012	C254X5.7	6349	

QUÉBEC METAL INC.
530, DE L'ÉGLISE,
ST-ROMUALD,
QUÉBEC, G6W 5M6
Tél.:(418) 839-0999
Fax:(418) 839-3810
www.quebecmetal.com

REV.	DESCRIPTION	DATE	PAR
0	FOR APPROVAL	29-06-05	

TROUS	PEINTURE	ACIER
13/16 Ø U / N	GALVANIZED	300W U/N

DESSINER PAR	VÉRIFIER PAR	REV.
A.P 06/28/2005	B.P.	0

PROJET: W.W.T IQUALUIT

DIV.	CONTRAT	
E001	C2005-42	G1012

DIV	GRID LOC.	ELEV.
1	C'/2'-4'	+16.589

CERTIFIÉ ISO 9002

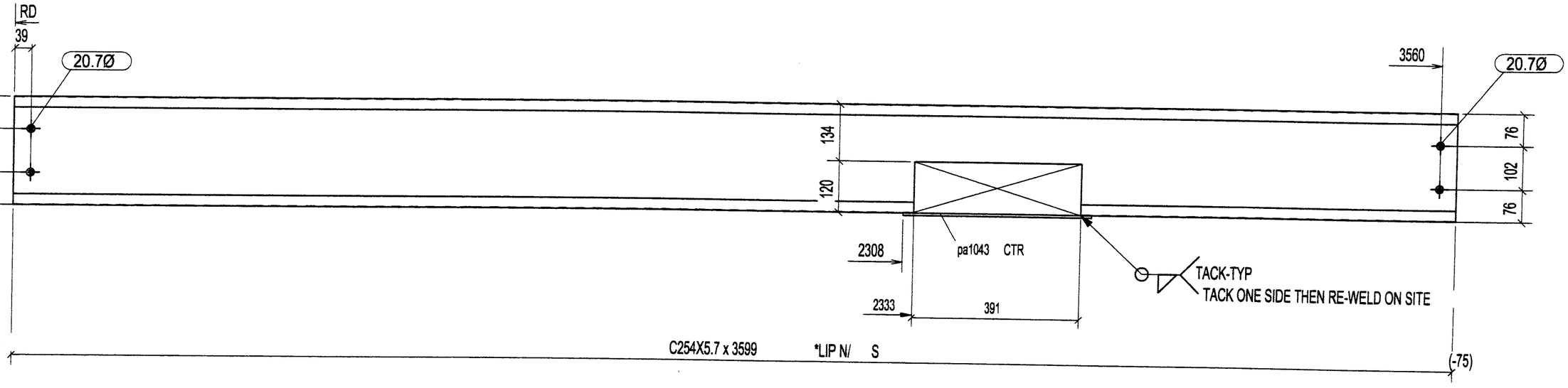

1 - GIRT - G1013

4	BOLT_3/4"DIA_A325_1"3/4
QTE	DESCRIPTION
BOULONS DE CHANTIER	

QTE	MARQUE	DESCRIPTION	LONG.	REMARKS
1	G1013	GIRT		
1	G1013	C254X5.7	3599	
1	pa1043	FL6X89	441	

QUÉRO METAL
930, DE L'ÉGLISE,
ST-ROMUALD,
QUÉBEC, G6W 5M6
Tel.:(418) 839-0999
Fax:(418) 839-3810
www.querometal.com

REV.	DESCRIPTION	DATE	PAR
0	FOR APPROVAL	29-06-05	

TROUS	PEINTURE	ACIER
13/16 Ø U / N	GALVANIZED	300W U/N

DESSINER PAR	VÉRIFIER PAR	REV.
A.P. 06/28/2005	B.P	0

PROJET: W.W.T IQUALUIT

DIV.	CONTRAT	
E001	C2005-42	G1013

DIV	GRID LOC.	ELEV.
1	A'/3'-5'	+15.389

CERTIFIÉ ISO 9002

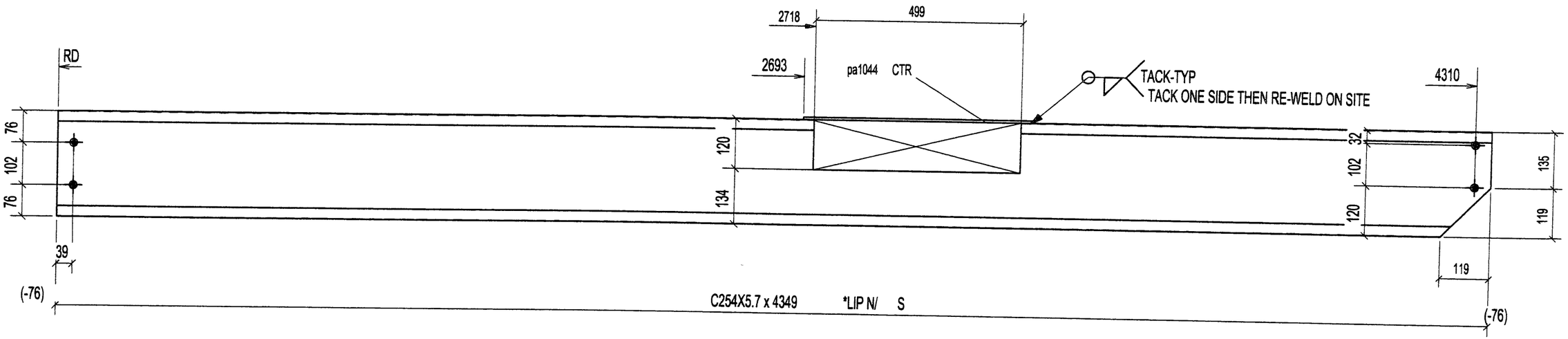

1 - GIRT - G1014

4	BOLT_3/4"DIA_A325_1"3/4
QTE	DESCRIPTION
BOULONS DE CHANTIER	

QTE	MARQUE	DESCRIPTION	LONG.	REMARKS
1	G1014	GIRT		
1	G1014	C254X5.7	4349	
1	pa1044	FL6X89	549	

QUÉRO METAL
930, DE L'ÉGLISE,
ST-ROMUALD,
QUÉBEC, G6W 5M6
Tel.:(418) 839-0999
Fax:(418) 839-3810
www.querometal.com

REV.	DESCRIPTION	DATE	PAR
0	FOR APPROVAL	29-06-05	

TROUS	PEINTURE	ACIER
13/16 Ø U / N	GALVANIZED	300W U/N

DESSINER PAR	VÉRIFIER PAR	REV.
A.P. 06/28/2005	B.P	0

PROJET: W.W.T IQUALUIT

DIV.	CONTRAT	
E001	C2005-42	G1014

DIV	GRID LOC.	ELEV.
1	A'/3'-5'	+16.589

CERTIFIÉ ISO 9002

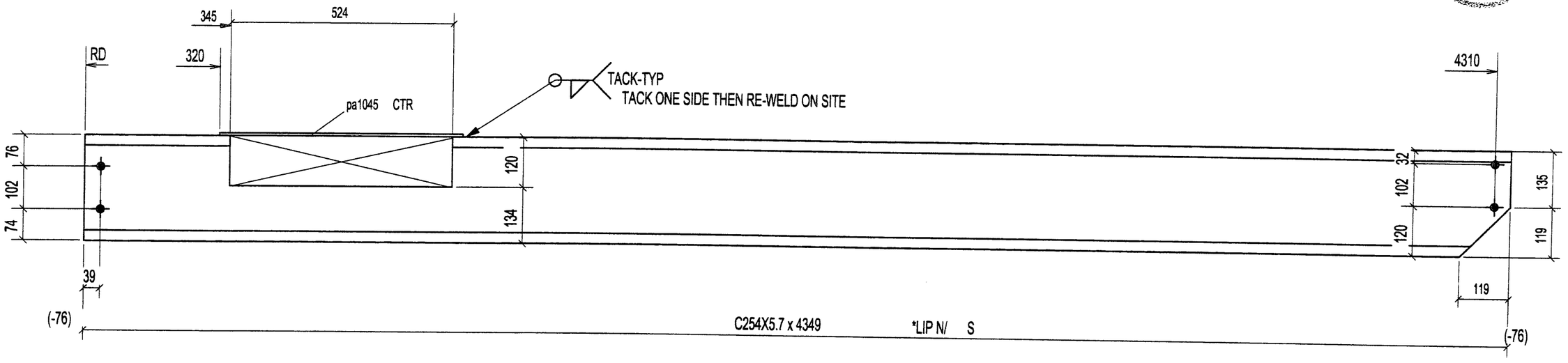

1 - GIRT - G1015

4	BOLT_3/4"DIA_A325_1"3/4
QTE	DESCRIPTION
BOULONS DE CHANTIER	

QTE	MARQUE	DESCRIPTION	LONG.	REMARKS
1	G1015	GIRT		
1	G1015	C254X5.7	4349	
1	pa1045	FL6X89	574	

QUEBEC METAL
930, DE L'ÉGLISE,
ST-ROMUALD,
QUÉBEC, G6W 5M6
Tel.:(418) 839-3999
Fax:(418) 839-3810
www.quebecmetal.com

REV.	DESCRIPTION	DATE	PAR
0	FOR APPROVAL	29-06-05	

TROUS	PEINTURE	ACIER
13/16 Ø U / N	GALVANIZED	300W U/N

DESSINER PAR	VÉRIFIER PAR	REV.
A.P. 06/28/2005	B.P.	0

PROJET: W.W.T IQUALUIT

DIV.	CONTRAT	
E001	C2005-42	G1015

DIV	GRID LOC.	ELEV.
1	B'-C'/5'	+15.389
1	B'-C'/5'	+16.589

CERTIFIÉ ISO 9002

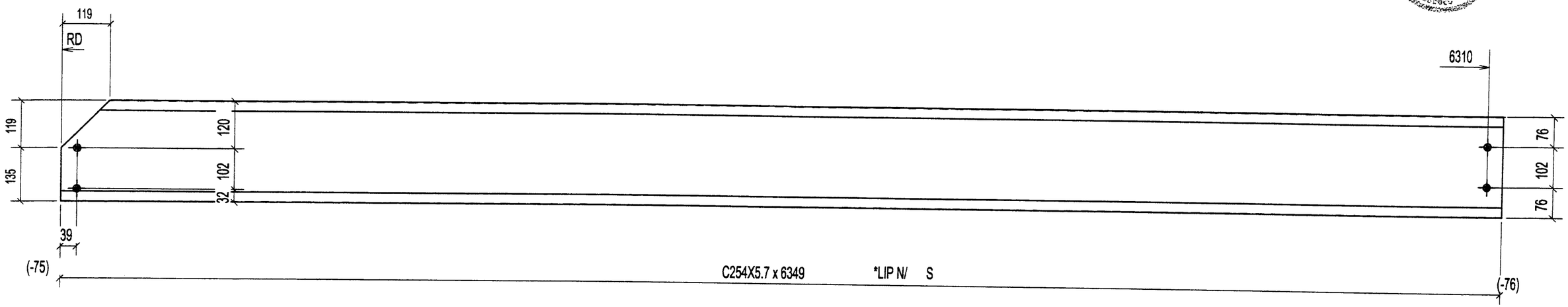

2 - GIRT - G1016

4	BOLT_3/4"DIA_A325_1"3/4
QTE	DESCRIPTION
BOULONS DE CHANTIER	

QTE	MARQUE	DESCRIPTION	LONG.	REMARKS
2	G1016	GIRT		
2	G1016	C254X5.7	6349	

GUERARD METAL
830, DE L'ÉGLISE,
ST-ROMUALD,
QUÉBEC, G6W 5M6
Tél.:(418) 839-0999
Fax:(418) 839-3810
www.guerardmetal.com

REV.	DESCRIPTION	DATE	PAR
0	FOR APPROVAL	29-06-05	

TROUS	PEINTURE	ACIER
13/16 Ø U / N	GALVANIZED	300W U/N

DESSINER PAR	VÉRIFIER PAR	REV.
A.P. 06/28/2005	S.P.	0

PROJET: W.W.T IQUALUIT

DIV	CONTRAT	
E001	C2005-42	G1016

DIV	GRID LOC.	ELEV.
1	A'/2'-3'	+11.201

CERTIFIÉ ISO 9002

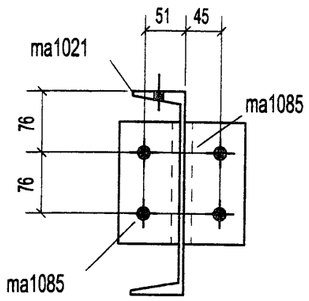

B - B

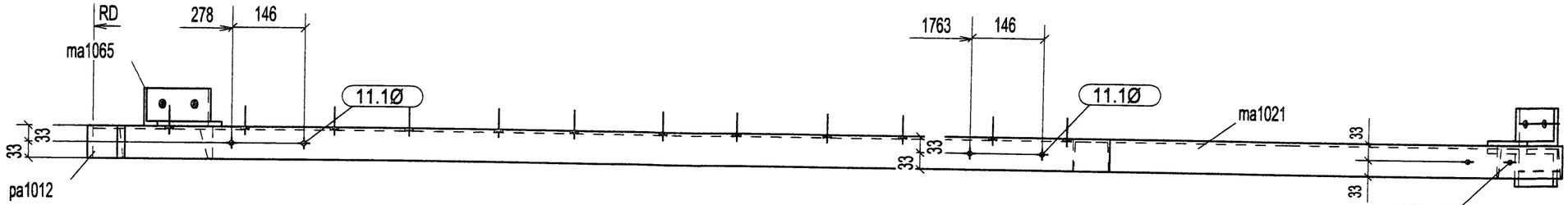

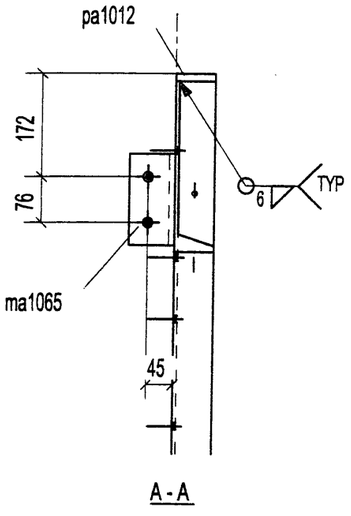

A - A

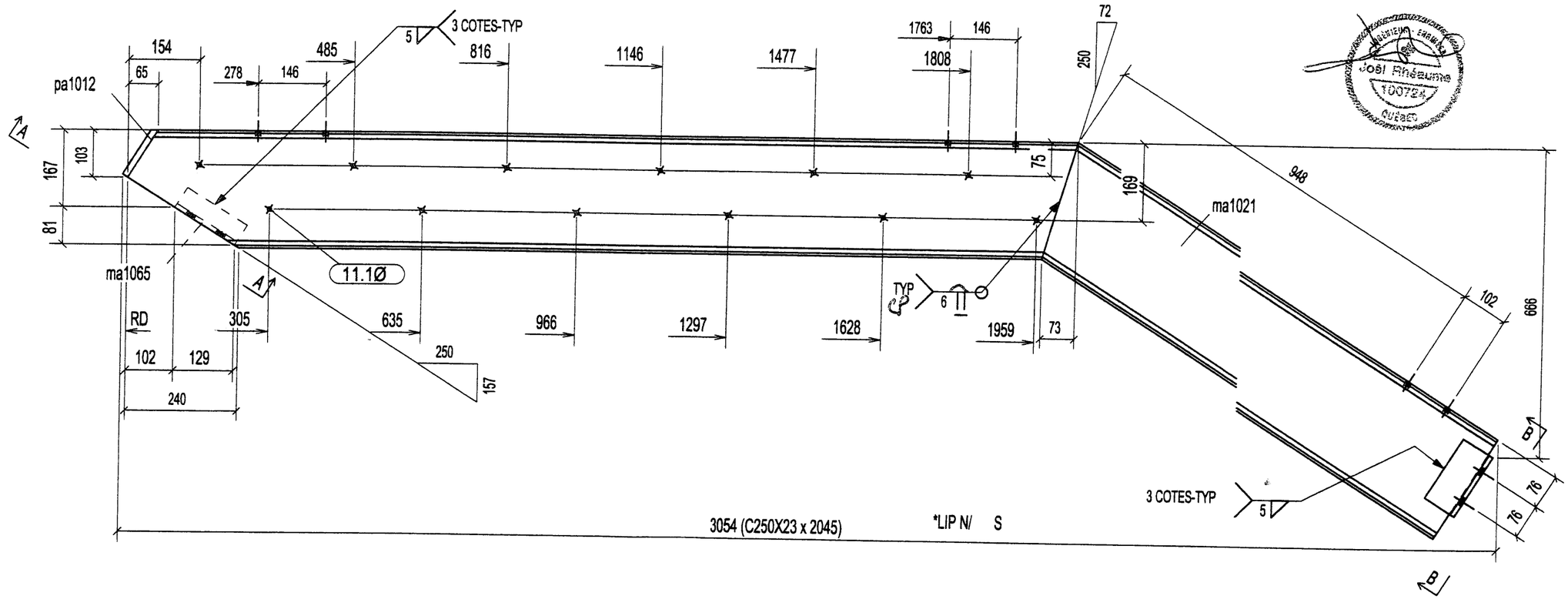

Cosi Rheaume
100728
QUEBEC

1 - STRINGE - M1000

1	M1000	STRINGER		
1	M1000	C250X23	2045	
1	ma1021	C250X23	1179	
1	ma1065	L76X51X9.5	152	
2	ma1085	L76X76X9.5	152	
1	pa1012	PL13X66	121	
QTE	MARQUE	DESCRIPTION	LONG.	REMARKS

4	BOLT_5/8"DIA_A307_2"
QTE	DESCRIPTION
BOULONS DE CHANTIER	

GUERO METAL
800, DE L'ÉGLISE,
ST-ROMUALD,
QUÉBEC, G6W 5M6
Tel.:(418) 839-0999
Fax:(418) 839-3810
www.guerometal.com

0	FOR APPROVAL	29-06-05	
REV.	DESCRIPTION	DATE	PAR

TROUS	PEINTURE	ACIER
13/16 Ø U / N	GALVANIZED	300W U/N

DESSINER PAR	VÉRIFIER PAR	REV.
A.P. 06/28/2005	B.P.	0

PROJET: W.W.T IQUALUIT

DIV.	CONTRAT	
E001	C2005-42	M1000

DIV	GRID LOC.	ELEV.
1	A'-B'/2'-3'	+11.201

CERTIFIÉ ISO 9002

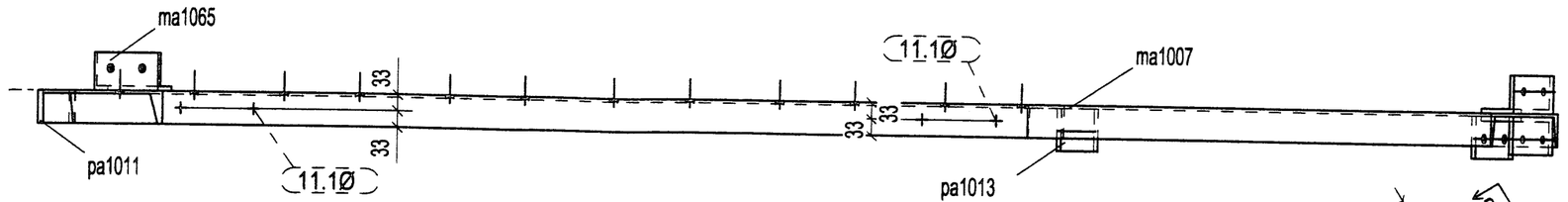

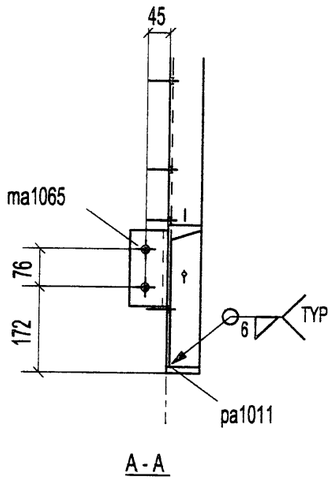

A - A

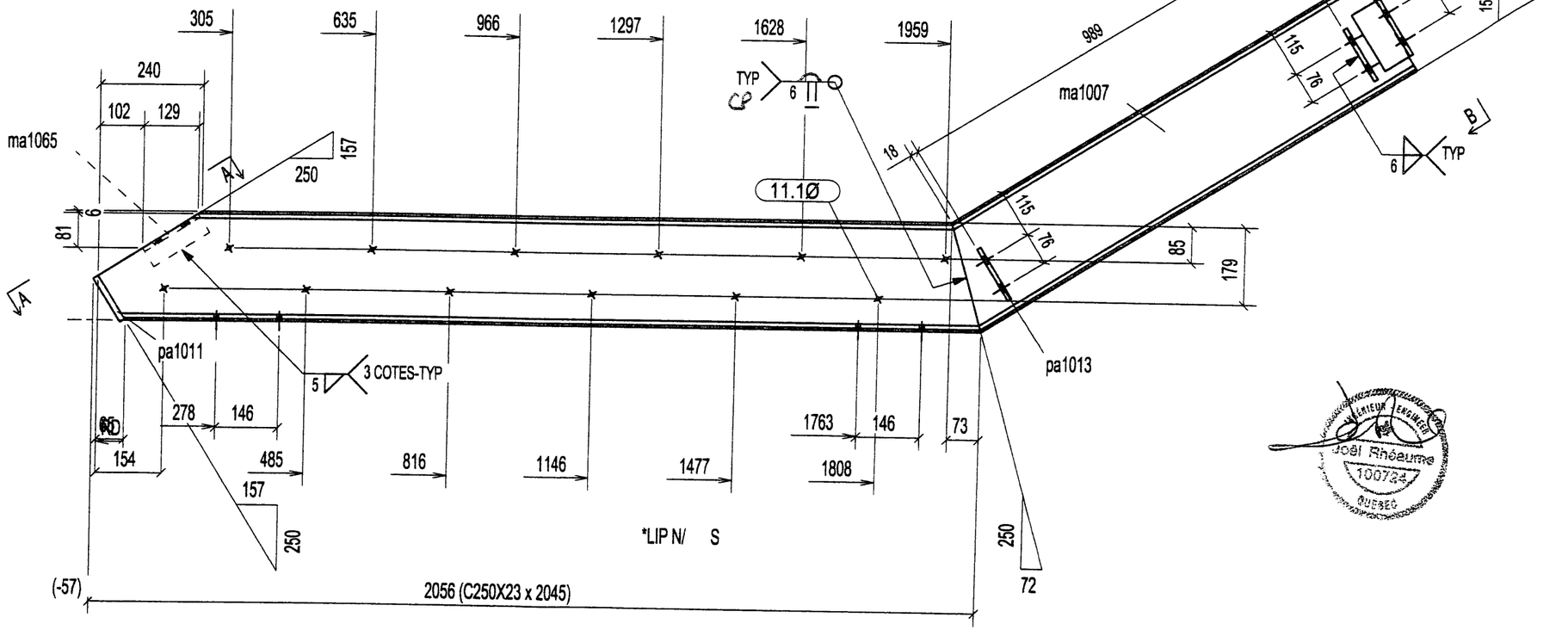

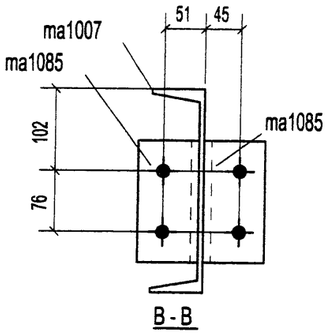

B - B

1 - STRINGE - M1001

QTE	MARQUE	DESCRIPTION	LONG.	REMARKS
1	M1001	STRINGER		
1	M1001	C250X23	2045	
1	ma1007	C250X23	1179	
1	ma1065	L76X51X9.5	152	
2	ma1085	L76X76X9.5	152	
1	pa1011	PL13X66	118	
2	pa1013	PL10X85	140	

QTE	DESCRIPTION
4	BOLT_5/8"DIA_A307_2"
BOULONS DE CHANTIER	

GUERO METAL INC.
930, DE L'ÉGLISE,
ST-ROMUALD,
QUÉBEC, G6W 5M6
Tel.:(418) 839-0959
Fax:(418) 839-3810
www.guerometal.com

REV.	DESCRIPTION	DATE	PAR
0	FOR APPROVAL	29-06-05	

TROUS	PEINTURE	ACIER
13/16 Ø U / N	GALVANIZED	300W U/N

DESSINER PAR	VÉRIFIER PAR	REV
A.P. 06/28/2005	B.P.	0

PROJET: W.W.T IQUALUIT

DIV	CONTRAT	
E001	C2005-42	M1001

DIV	GRID LOC.	ELEV.
1	<1/A>	+17.509
1	A'/1'-5'	+17.509

CERTIFIÉ ISO 9002

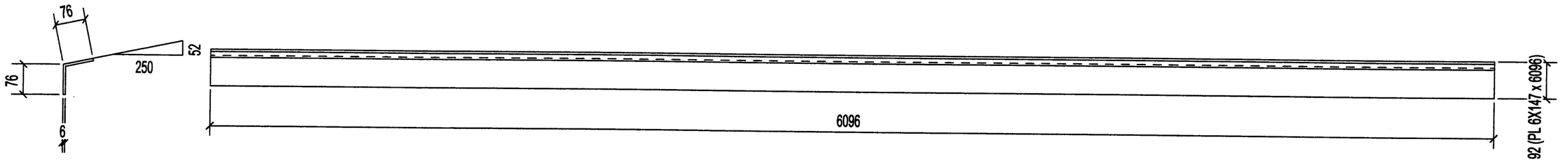

2 - BENT PL - M1002

QTE	DESCRIPTION
BOULONS DE CHANTIER	

QTE	MARQUE	DESCRIPTION	LONG.	REMARKS
2	M1002	BENT PLATE		
2	M1002	PL 6X147.1	6096	

GUERO METAL
600, DE L'ÉGLISE,
ST-ROMUALD,
QUÉBEC, G6W 5M6
Tel.:(418) 839-0889
Fax:(418) 839-3810

REV.	DESCRIPTION	DATE	PAR
0	FOR APPROVAL	05-07-05	

TROUS	PEINTURE	ACIER
13/16 Ø U/N	GALVANIZED	300W U/N

DESSINER PAR	VÉRIFIER PAR	REV.
A.P. 07/05/2005	B.P.	0

PROJET: W.W.T IQUALUIT

DIV.	CONTRAT	
5001	C2005-42	M1002

DIV	GRID LOC.	ELEV.
1	1-2/B-A	+13.868

CERTIFIÉ ISO 9002

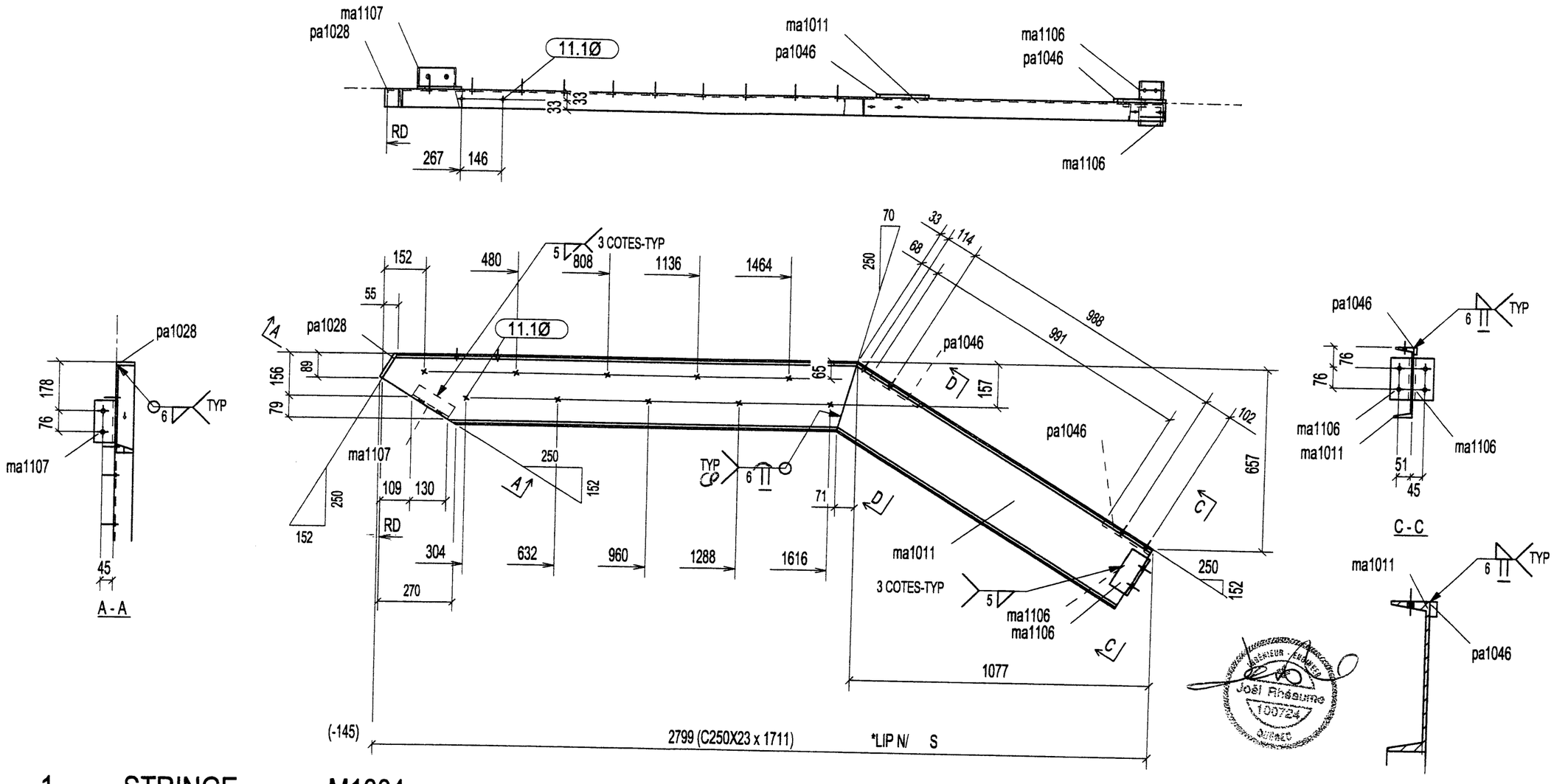

1 - STRINGE - M1004

1	M1004	STRINGER		
1	M1004	C250X23	1711	
1	ma1011	C250X23	1262	
2	ma1106	L76X76X9.5	152	
1	ma1107	L76X51X9.5	152	
1	pa1028	PL12X66	105	
2	pa1046	PL12X25	203	
QTE	MARQUE	DESCRIPTION	LONG.	REMARKS

4	BOLT_5/8"DIA_A307_2"
QTE	DESCRIPTION
BOULONS DE CHANTIER	

QUÉRO METAL INC.
930, DE L'ÉGLISE,
ST-ROMUALD,
QUÉBEC, G6W 5M6
Tel.:(418) 839-0999
Fax:(418) 839-3810
www.queerometal.com

REV.	DESCRIPTION	DATE	PAR
0	FOR APPROVAL	29-06-05	

TROUS	PEINTURE	ACIER
13/16 Ø U / N	GALVANIZED	300W U/N

DESSINER PAR	VÉRIFIER PAR	REV.
A.P. 06/28/2005	B.P	0

PROJET: W.W.T IQUALUIT

DIV.	CONTRAT	
E001	C2005-42	M1004

DIV	GRID LOC.	ELEV.
1	1-2/B-A	+13.868

CERTIFIÉ ISO 9002

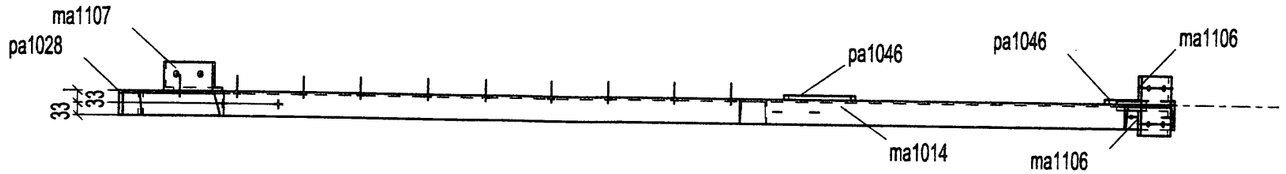

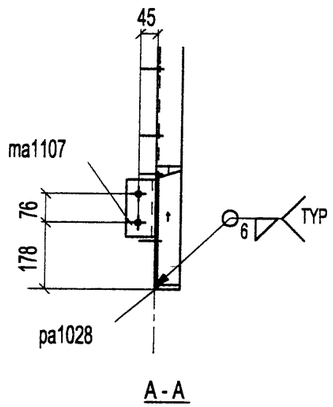

A - A

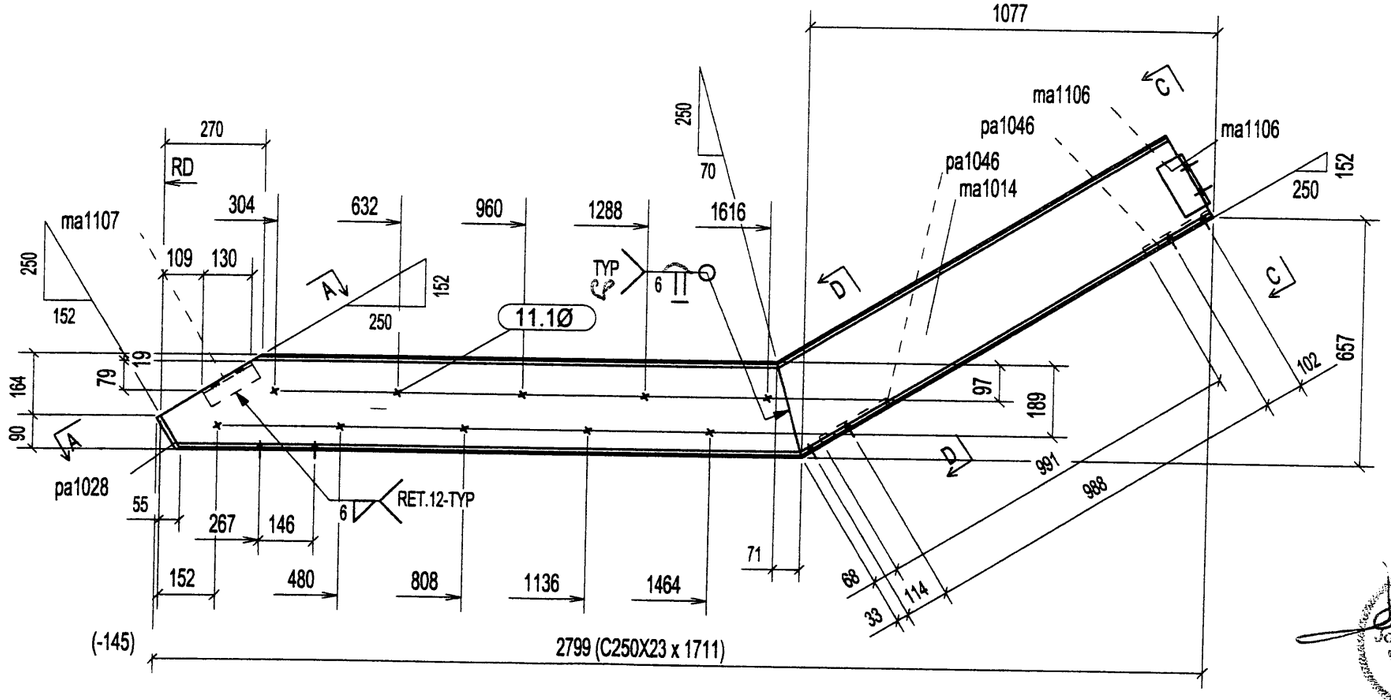

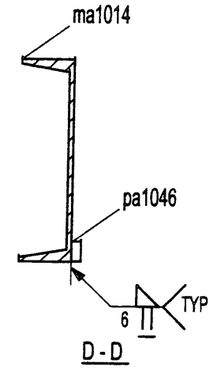

D - D

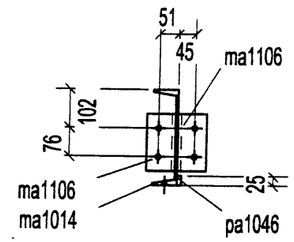

C - C

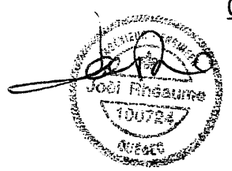

1 - STRINGE - M1005

QTE	MARQUE	DESCRIPTION	LONG.	REMARKS
1	M1005	STRINGER		
1	M1005	C250X23	1711	
1	ma1014	C250X23	1262	
2	ma1106	L76X76X9.5	152	
1	ma1107	L76X51X9.5	152	
1	pa1028	PL12X66	105	
2	pa1046	PL12X25	203	

QTE	DESCRIPTION
4	BOLT_5/8"DIA_A307_2"
BOULONS DE CHANTIER	

QUÉBEC METAL
830, DE L'ÉGLISE,
ST-ROMUALD,
QUÉBEC, G6W 5M6
Tel.:(418) 839-0959
Fax:(418) 839-3810
www.quebecmetal.com

REV.	DESCRIPTION	DATE	PAR
0	FOR APPROVAL	29-06-05	

TROUS	PEINTURE	ACIER
13/16 Ø U / N	GALVANIZED	300W U/N

DESSINER PAR	VÉRIFIER PAR	REV.
A.P. 06/28/2005	B.P.	0

PROJET: W.W.T IQUALUIT

DIV.	CONTRAT	
E001	C2005-42	M1005

DIV	GRID LOC.	ELEV.
1	4/B	+16.651

CERTIFIÉ ISO 9002

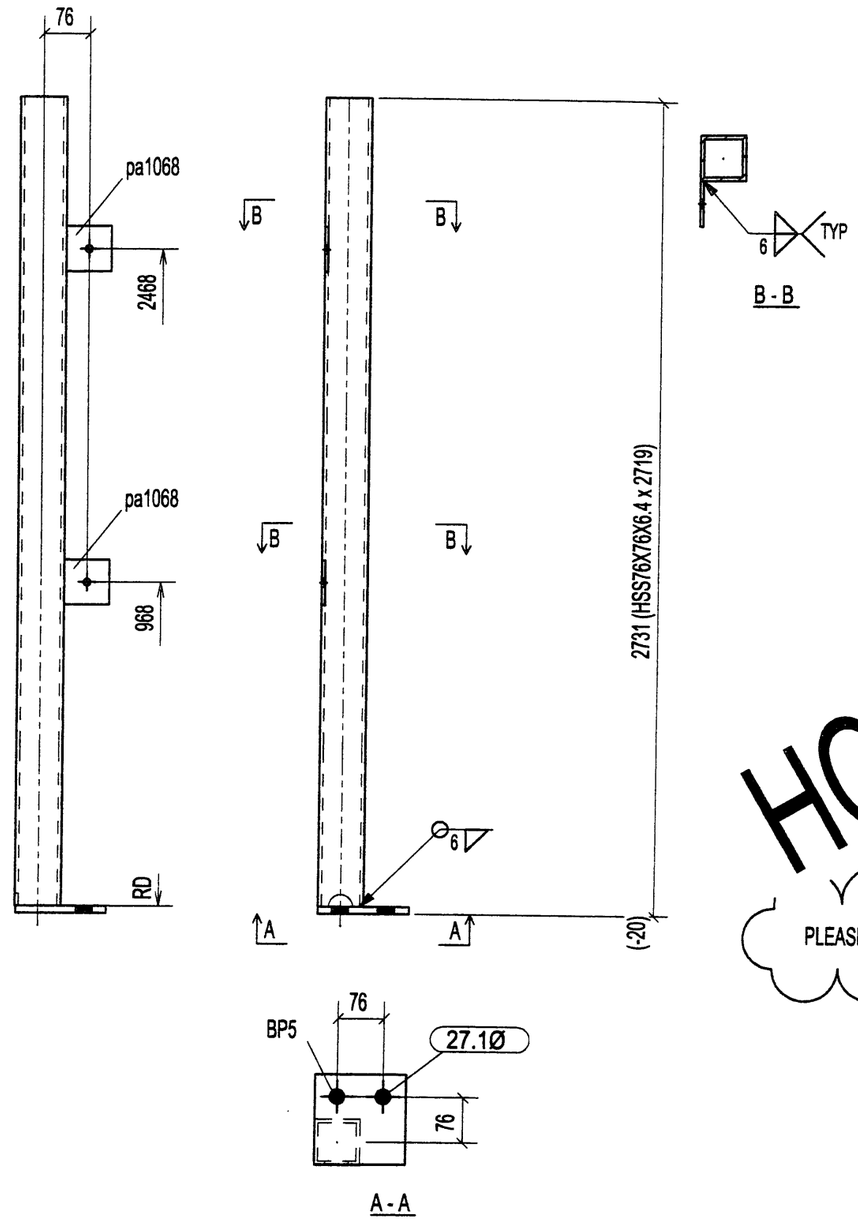

HOLD

PLEASE CONFIRM LENGHT

1 - FRAME - M1006

1	M1006	FRAME		
1	M1006	HSS76X76X6.4	2719	
1	BP5	PL12X150	150	
2	pa1068	PL 6X75	75	
QTE	MARQUE	DESCRIPTION	LONG.	REMARKS

QTE	DESCRIPTION
BOULONS DE CHANTIER	

GUERO METAL
800, DE L'ÉGLISE,
ST-ROMUALD,
QUÉBEC, G6W 5M6
Tel.:(418) 839-0999
Fax:(418) 839-3810
www.guerometal.com

REV.	DESCRIPTION	DATE	PAR
0	FOR APPROVAL	29-06-05	

TROUS	PEINTURE	ACIER	
13/16 Ø U / N	GALVANIZED	300W U/N	
DESSINER PAR: A.P. 06/29/2005	VÉRIFIER PAR: B.P.	REV.: 0	

PROJET: W.W.T IQUALUIT

DIV.	CONTRAT	
E001	C2005-42	M1006

DIV	GRID LOC.	ELEV.
1	3-4/B	+16.651

CERTIFIÉ ISO 9002

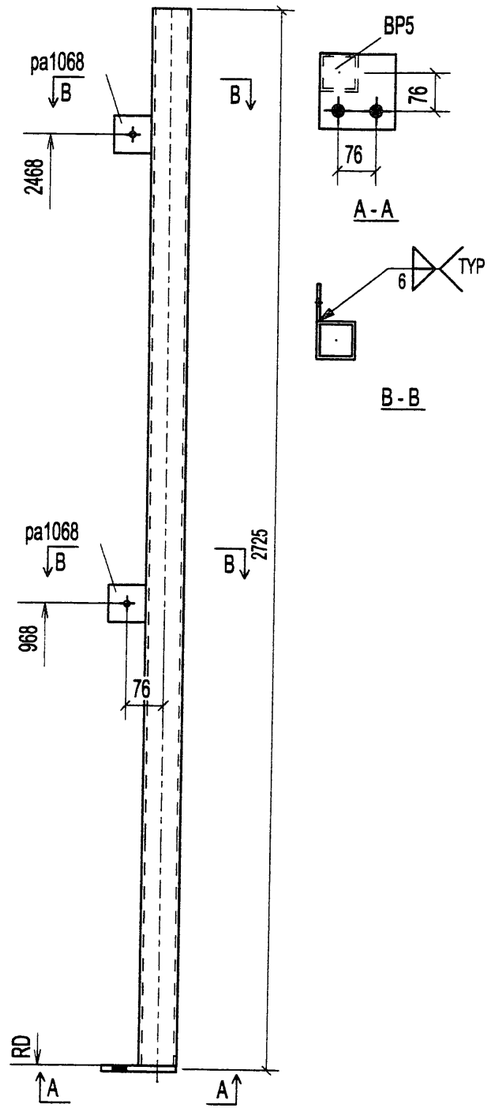

HOLD

PLEASE CONFIRM LENGHT

INGÉNIEUR - ENGINEER
Joël Rhéaume
100724
QUÉBEC

1 - FRAME - M1007

QTE	MARQUE	DESCRIPTION	LONG.	REMARKS
1	M1007	FRAME		
1	M1007	HSS76X76X6.4	2719	
1	BP5	PL12X150	150	
2	pa1068	PL 6X75	75	

QTE	DESCRIPTION
BOULONS DE CHANTIER	

QUÉRO METAL LIMITÉE
930, DE L'ÉGLISE,
ST-ROMUALD,
QUÉBEC, G6W 5M6
Tel.:(418) 839-0999
Fax:(418) 839-3810
www.querometal.com

REV.	DESCRIPTION	DATE	PAR
0	FOR APPROVAL	29-06-05	

TROUS	PEINTURE	ACIER
13/16 Ø U / N	GALVANIZED	300W U/N

DESSINER PAR	VÉRIFIER PAR	REV.
A.P. 06/28/2005	B.P.	0

PROJET: W.W.T IQUALUIT

DIV.	CONTRAT	
E001	C2005-42	M1007

DIV	GRID LOC.	ELEV.
1	3-4/B	+16.727

CERTIFIÉ ISO 9002

HOLD

PLEASE CONFIRM LENGHT

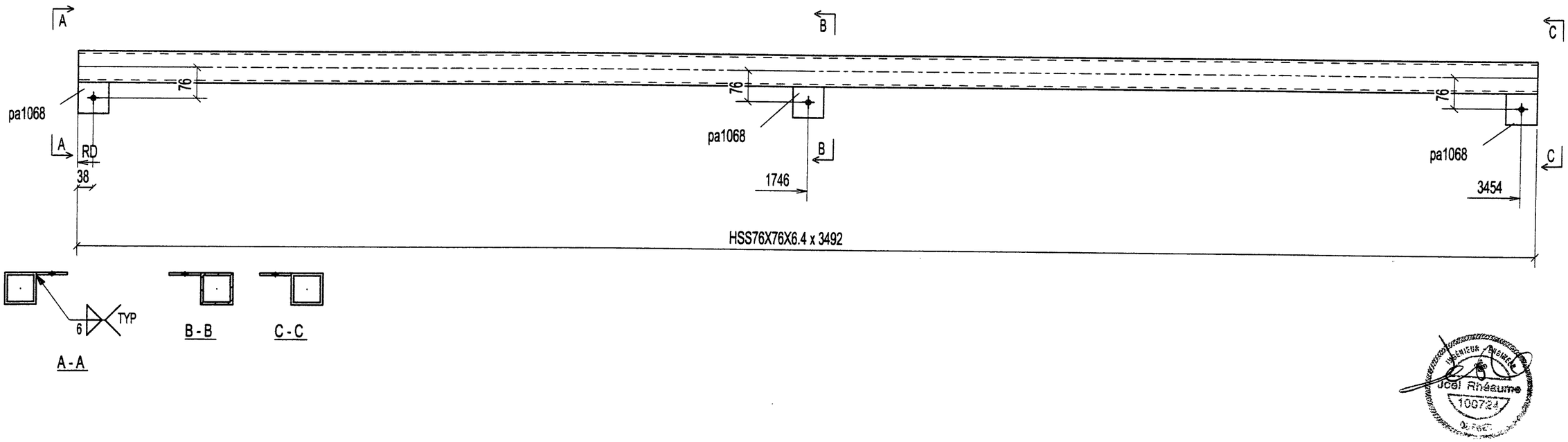

1 - FRAME - M1008

QTE	DESCRIPTION
BOULONS DE CHANTIER	

QTE	MARQUE	DESCRIPTION	LONG.	REMARKS
1	M1008	FRAME		
1	M1008	HSS76X76X6.4	3492	
3	pa1068	PL 6X75	75	

GUERO METAL
930, DE L'ÉGLISE,
ST-ROMUALD,
QUÉBEC, G6W 5M6
Tél.:(418) 839-0999
Fax:(418) 839-3810

REV.	DESCRIPTION	DATE	PAR
0	FOR APPROVAL	29-06-05	

TROUS	PEINTURE	ACIER
13/16 Ø U / N	GALVANIZED	300W U/N

DESSINER PAR	VÉRIFIER PAR	REV.
A.P 06/28/2005	a.p.	0

PROJET: W.W.T IQUALUIT

DIV.	CONTRAT	
F001	C2005-42	M1008

DIV	GRID LOC.	ELEV.
1	2/A>	+18.009
1	C'/2'-5'	+18.009

CERTIFIÉ ISO 9002

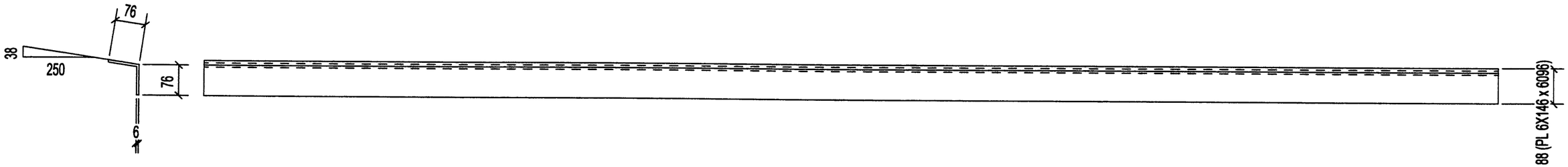

04-07-2005

2 - BENT PL - M1009

QTE	DESCRIPTION
BOULONS DE CHANTIER	

QTE	MARQUE	DESCRIPTION	LONG.	REMARKS
2	M1009	BENT PLATE		
2	M1009	PL 6X146.9	6096	

GUERO METAL
830, DE L'ÉGLISE,
ST-ROMUALD,
QUÉBEC, G6W 5M6
Tel.:(418) 839-0999
Fax:(418) 839-3810

REV.	DESCRIPTION	DATE	PAR
0	FOR APPROVAL	05-07-05	

TROUS	PEINTURE	ACIER	
13/16 Ø U/N	GALVANIZED	300W U/N	
DESSINER PAR: A.P. 07/05/2005	VÉRIFIER PAR: B.P.	REV.: 0	

PROJET: W.W.T IQUALUIT

DIV.	CONTRAT	
5001	C2005-42	M1009

DIV	GRID LOC.	ELEV.
1	C'/4'	+14.202

CERTIFIÉ ISO 9002

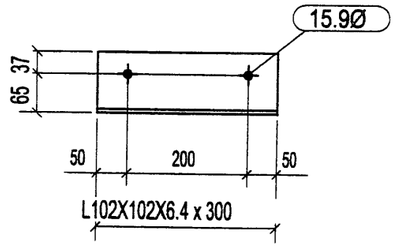

1 - CONTOUR - M1013

2	HVA_1/2"DIA_5"
QTE	DESCRIPTION
BOULONS DE CHANTIER	

1	M1013	CONTOUR		
1	M1013	L102X102X6.4	300	
QTE	MARQUE	DESCRIPTION	LONG.	REMARKS

GUERO METAL
830, DE L'ÉGLISE,
ST-ROMUALD,
QUÉBEC, G6W 5M6
Tel.:(418) 839-0959
Fax:(418) 839-3810
www.guerometal.com

REV.	DESCRIPTION	DATE	PAR
0	FOR APPROVAL	29-06-05	

TROUS	PEINTURE	ACIER
13/16 Ø U/N	GALVANIZED	300W U/N

DESSINER PAR	VÉRIFIER PAR	REV.
A.P. 06/28/2005	B.P.	0

PROJET: W.W.T IQUALUIT

DIV.	CONTRAT	
E001	C2005-42	M1013

DIV	GRID LOC.	ELEV.
1	C'/4'-5'	+14.202

CERTIFIÉ ISO 9002

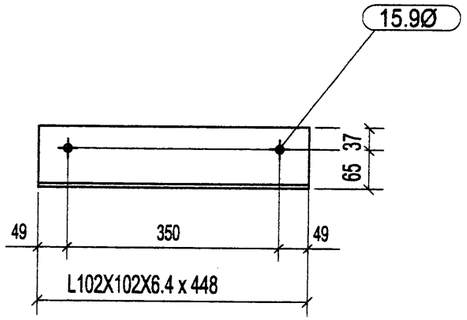

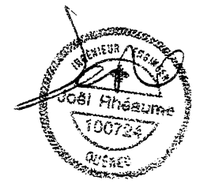

1 - CONTOUR - M1014

2	HVA_1/2"DIA_5"
QTE	DESCRIPTION
BOULONS DE CHANTIER	

QTE	MARQUE	DESCRIPTION	LONG.	REMARKS
1	M1014	CONTOUR		
1	M1014	L102X102X6.4	448	

QUÉRO METAL INC.
930, DE L'ÉGLISE,
ST-ROMUALD,
QUÉBEC, G6W 5M6
Tel.:(418) 839-0999
Fax:(418) 839-3810
www.querometal.com

REV.	DESCRIPTION	DATE	PAR
0	FOR APPROVAL	29-06-05	

TROUS	PEINTURE	ACIER	
13/16 Ø U / N	GALVANIZED	300W U/N	
DESSINER PAR: A.P. 06/28/2005	VÉRIFIER PAR: B.P.	REV.: 0	

PROJET: W.W.T IQUALUIT

DIV.	CONTRAT	
E001	C2005-42	M1014

DIV	GRID LOC.	ELEV.
1	3-4/B-A	+12.844

CERTIFIÉ ISO 9002

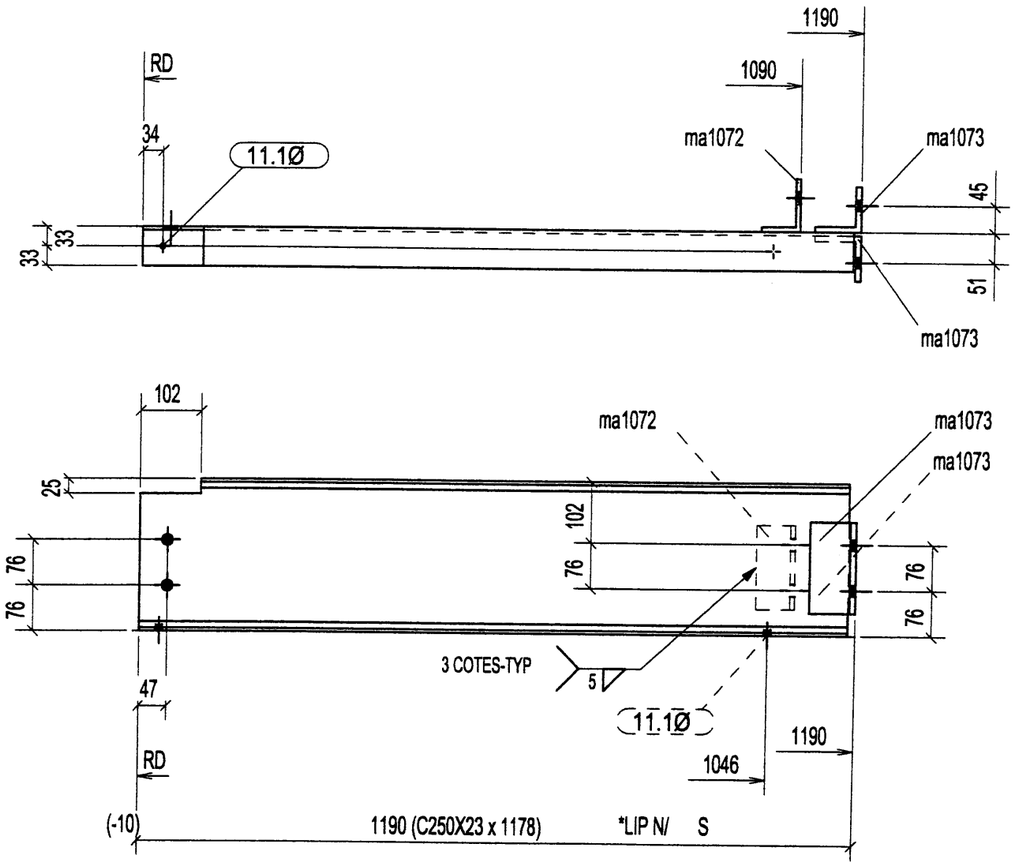

1 - STRINGE - M1015

1	M1015	STRINGER			
1	M1015	C250X23	1178		
1	L2	L89X64X7.9	140		
2	ma1073	L76X76X9.5	152		
QTE	MARQUE	DESCRIPTION	LONG.	REMARKS	

QTE	DESCRIPTION
2	BOLT_3/4"DIA_A325_1"3/4
4	BOLT_5/8"DIA_A307_2"
BOULONS DE CHANTIER	

QUÉRO METAL
530, DE L'ÉGLISE,
ST-ROMUALD,
QUÉBEC, G6W 5M6
Tél.:(418) 839-3999
Fax:(418) 839-3910
www.querometal.com

REV.	DESCRIPTION	DATE	PAR
0	FOR APPROVAL	29-06-05	

TROUS	PEINTURE	ACIER
13/16 Ø U / N	GALVANIZED	300W U/N

DESSINER PAR	VÉRIFIER PAR	REV.
A.P. 06/28/2005	B.P.	0

PROJET: W.W.T IQUALUIT

DIV.	CONTRAT	
E001	C2005-42	M1015

CERTIFIÉ ISO 9002

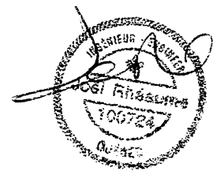

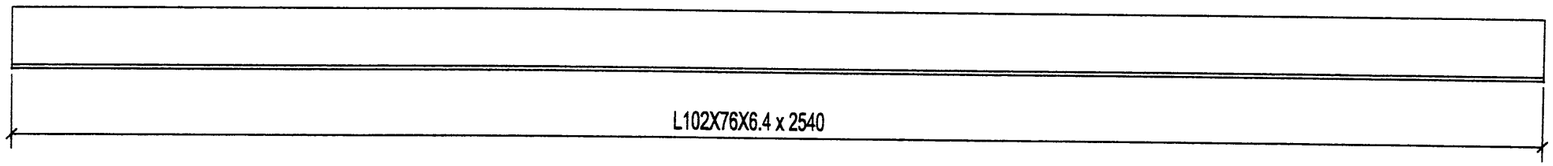

2 - SUPPORT - M1017

QTE	DESCRIPTION
BOULONS DE CHANTIER	

QTE	MARQUE	DESCRIPTION	LONG	REMARKS
2	M1017	SUPPORT		
2	M1017	L102X76X6.4	2540	

GUERO METAL
930, DE L'ÉGLISE,
ST-ROMUALD,
QUÉBEC, G6W 5M6
Tel.:(418) 839-0999
Fax:(418) 839-3810

REV.	DESCRIPTION	DATE	PAR
0	FOR APPROVAL	27-06-05	

TROUS	PEINTURE	ACIER
13/16 Ø U / N	GALVANIZED	300W U/N

DESSINER PAR	VÉRIFIER PAR	REV.
A.P. 06/23/2005	-	0

PROJET: W.W.T IQUALUIT

DIV | CONTRAT

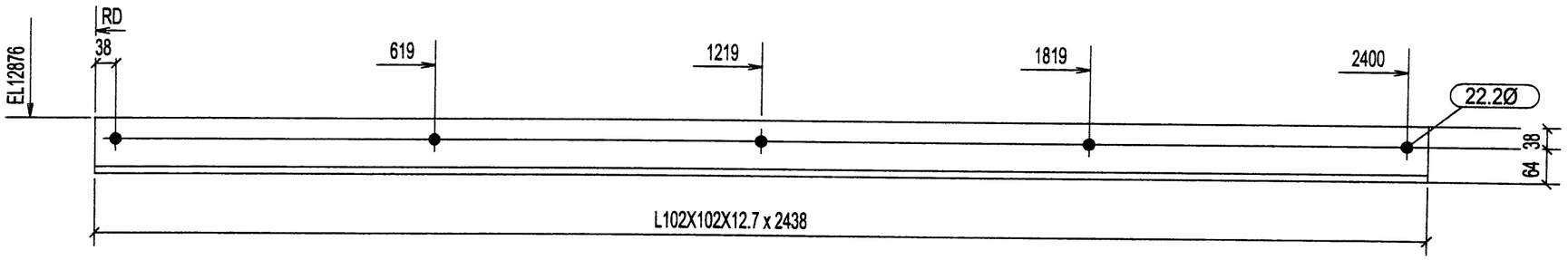

3 - SUPPORT - M1018

QTE	DESCRIPTION
BOULONS DE CHANTIER	

QTE	MARQUE	DESCRIPTION	LONG.	REMARKS
3	M1018	SUPPORT		
3	M1018	L102X102X12.7	2438	

GUERRO METAL INC.
930, DE L'ÉGLISE,
ST-ROMUALD,
QUÉBEC, G6W 5M6
Tel.:(418) 839-0959
Fax:(418) 839-3910

REV.	DESCRIPTION	DATE	PAR
0	FOR APPROVAL	27-06-05	

TROUS	PEINTURE	ACIER
13/16 Ø U / N	GALVANIZED	300W U/N

DESSINER PAR	VÉRIFIER PAR	REV.
A.P. 06/23/2005	-	0

PROJET: W.W.T IQUALUIT

DIV.	CONTRAT	
F001	C2005-42	M1018

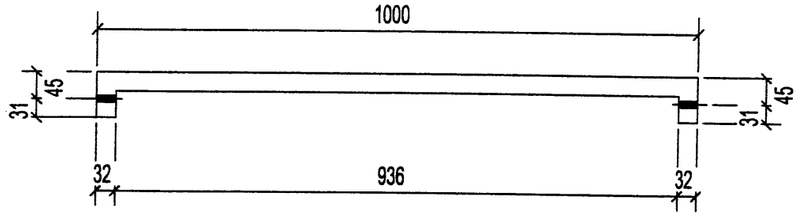

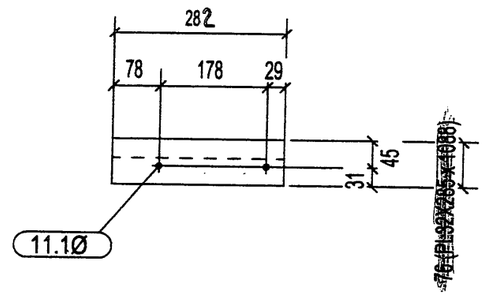

19-4 1 $\frac{1}{4}$" X $\frac{3}{16}$" GRATING GALVANIZED

6 - STEP - M1019

**THIS SHOP DRAWING IS ONLY A GRAPHICAL REPRESENTATION OF STANDARD GRATING STAIRS

4	BOLT_3/8"DIA_A307_2"1/4
QTE	DESCRIPTION
BOULONS DE CHANTIER	

6	M1019	STEP		
QTE	MARQUE	DESCRIPTION	LONG.	REMARKS

QUEBEC METAL
930, DE L'ÉGLISE,
ST-ROMUALD,
QUÉBEC, G6W 5M6
Tel.:(418) 839-0999
Fax:(418) 839-3810
www.quebecmetal.com

REV.	DESCRIPTION	DATE	PAR
0	FOR APPROVAL	27-06-05	

TROUS	PEINTURE	ACIER
13/16 Ø U/N	GALVANIZED	300W U/N

DESSINER PAR	VÉRIFIER PAR	REV.
A.P. 06/27/2005	-	0

PROJET: W.W.T IQUALUIT

DIV.	CONTRAT	
F001	C2005-42	M1019

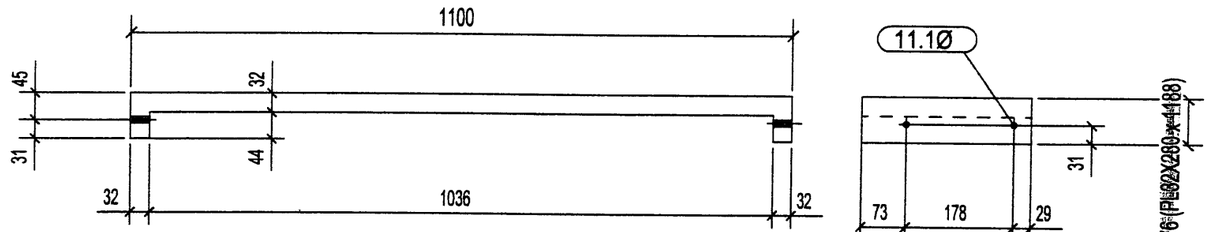

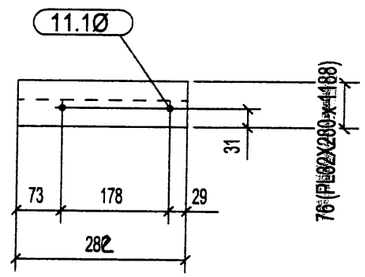

19-4 1 $\frac{1}{4}$" X $\frac{3}{16}$" GRATING GALVANIZED

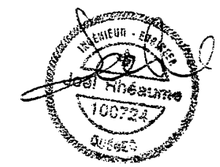

20 - STEP - M1020

**THIS SHOP DRAWING IS ONLY A GRAPHICAL REPRESENTATION OF STANDARD GRATING STAIRS

4	BOLT_3/8"DIA_A307_2"1/4
QTE	DESCRIPTION
BOULONS DE CHANTIER	

20	M1020	STEP		
~~20~~	~~M1020~~	~~DIMENSIONS~~	~~1100~~	
QTE	MARQUE	DESCRIPTION	LONG.	REMARKS

EUROMETAL
830, DE L'ÉGLISE,
ST-ROMUALD,
QUÉBEC, G6W 5M6
Tel.:(418) 839-0999
Fax:(418) 839-3810
www.eurometal.com

REV.	DESCRIPTION	DATE	PAR
0	FOR APPROVAL	27-06-05	

TROUS	PEINTURE	ACIER	
13/16 Ø U/N	GALVANIZED	300W U/N	
DESSINER PAR: A.P. 06/27/2005	VÉRIFIER PAR: -	REV.: 0	

PROJET: W.W.T IQUALUIT

DIV.	CONTRAT	
F001	C2005-42	M102(0)

DIV	GRID LOC.	ELEV.
1	C'/2'-4'	+14.202

CERTIFIÉ ISO 9002

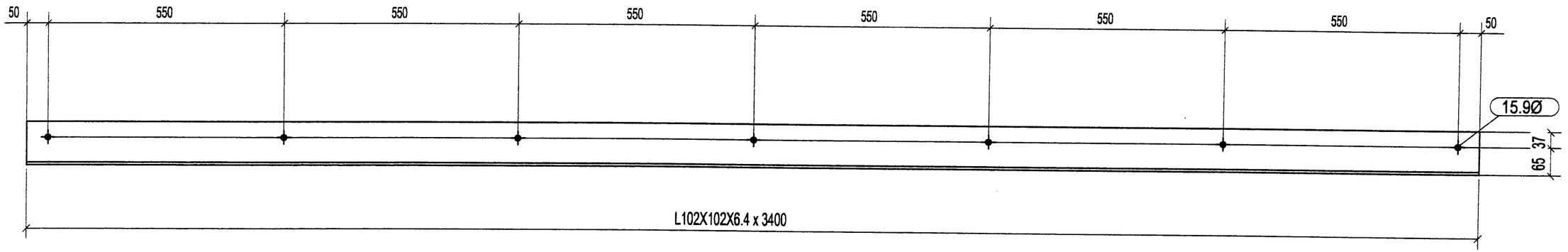

1 - CONTOUR - M1021

7	HVA_1/2"DIA_5"
QTE	DESCRIPTION
BOULONS DE CHANTIER	

QTE	MARQUE	DESCRIPTION	LONG.	REMARKS
1	M1021	CONTOUR		
1	M1021	L102X102X6.4	3400	

QUÉRO METAL
800, DE L'ÉGLISE,
ST-ROMUALD,
QUÉBEC, G6W 5M6
Tel.:(418) 839-0999
Fax:(418) 839-3810
www.queerometal.com

REV.	DESCRIPTION	DATE	PAR
0	FOR APPROVAL	29-06-05	

TROUS	PEINTURE	ACIER
13/16 Ø U/N	GALVANIZED	300W U/N

DESSINER PAR	VÉRIFIER PAR	REV.
A.P. 06/29/2005	B.P.	0

PROJET: W.W.T IQUALUIT

DIV.	CONTRAT	
E001	C2005-42	M1021

DIV	GRID LOC.	ELEV.
1	A'-B'/5'	+14.202
1	A'-B'/5'	+14.202

CERTIFIÉ ISO 9002

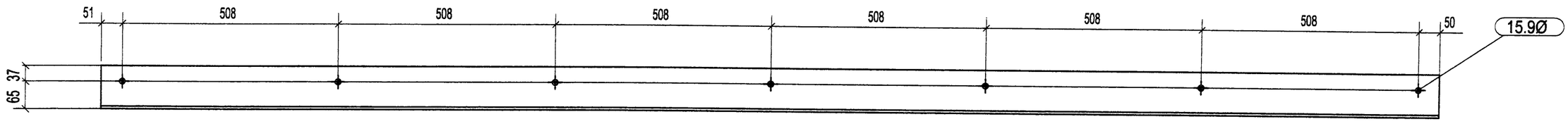

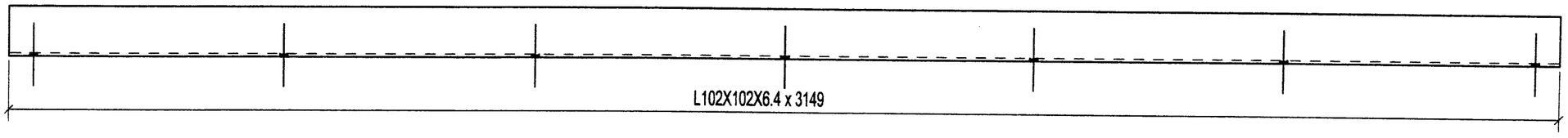

2 - CONTOUR - M1022

7	HVA_1/2"DIA_5"
QTE	DESCRIPTION
BOULONS DE CHANTIER	

2	M1022	CONTOUR		
2	M1022	L102X102X6.4	3149	
QTE	MARQUE	DESCRIPTION	LONG.	REMARKS

QUÉBEC METAL
939, DE L'ÉGLISE,
ST-ROMUALD,
QUÉBEC, G6W 5M6
Tel.:(418) 839-5959
Fax:(418) 839-3810
www.quebecmetal.com

0	FOR APPROVAL	29-06-05	
REV.	DESCRIPTION	DATE	PAR

TROUS	PEINTURE	ACIER
13/16 Ø U / N	GALVANIZED	300W U/N

DESSINER PAR	VÉRIFIER PAR	REV.
A.P. 06/28/2005	B.P.	0

PROJET W.W.T IQUALUIT

DIV.	CONTRAT	
E001	C2005-42	M1022

TOTAL QTY	UNIT QTY	FIELD BOLTS	LENGTH

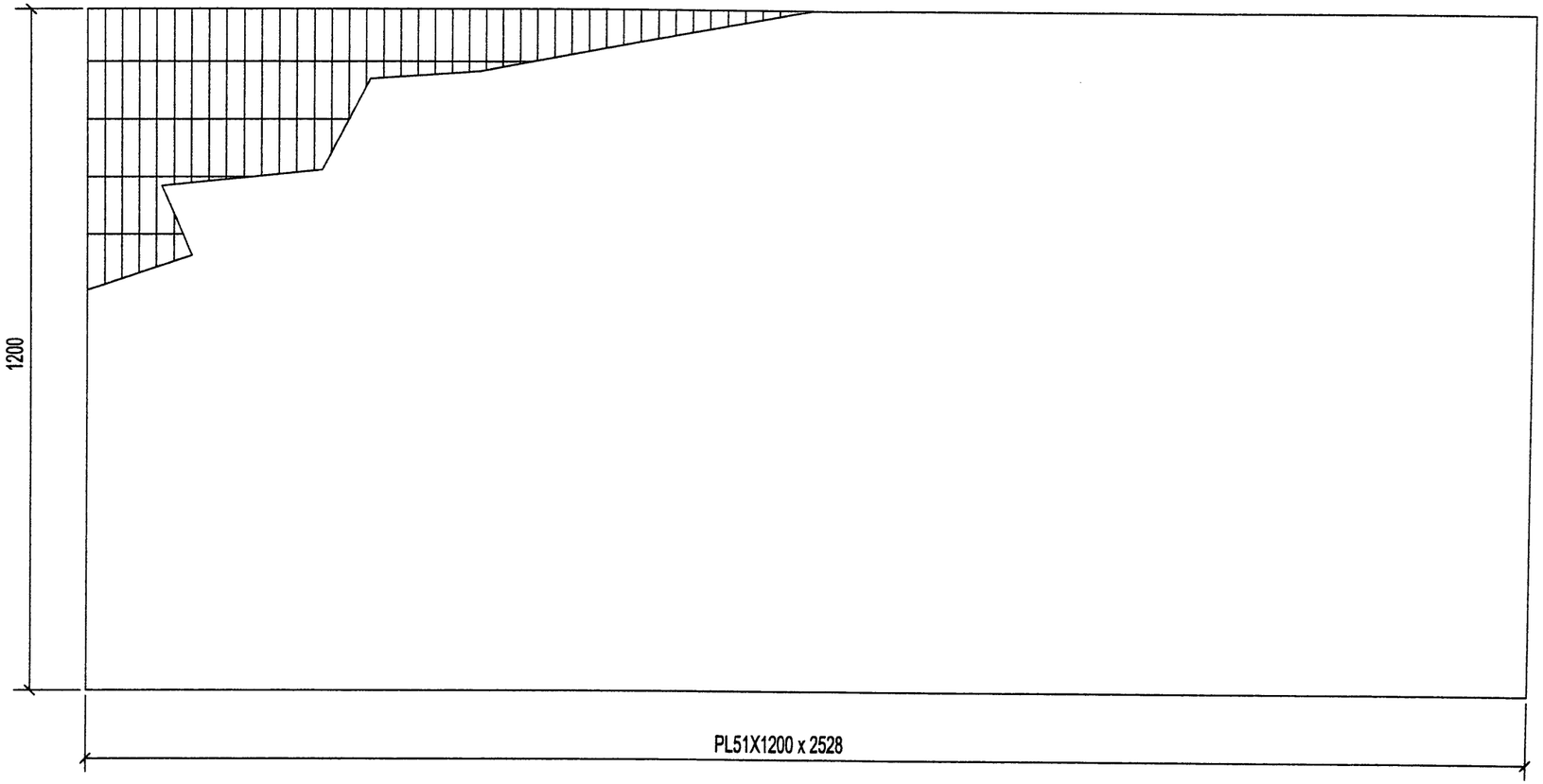

NEW 51 X 4.8 GRATING GALVANIZED

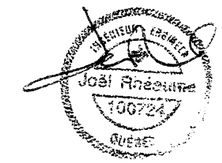

DIV	GRID LOC.	ELEV.
1	A'-B'/2'-4'	+11.250

1 - GRATING - M1023

TOTAL QTY	UNIT QTY	MARK	DESCRIPTION	LENGTH	UNIT WT.	REMARKS
1		M1023	GRATING			
1	1	M1023	PL51X1200	2528	1215	300W

REV	DATE	REMARKS
0	23-06-05	FOR APPROVAL

REF: E001

MATERIAL: A36 U/N

HOLES: 13/16 U/N EDGE DIST: 1"1/4 U/N

WELDS: E70XX BOLTS: 3/4 U/N

SURF. PREP: SEE SPEC

PAINT NOTE: GALVANIZED

Drawing Prepared on 3D-Xsteel

STRUCTURE W.W.T IQUALUIT

LOCATION

DWG. TITLE GRATING

DRAWN BY	CHK'D BY	DATE	JOB NUMBER	DWG NUMBER	
–	–		C2005-42	M1023	0

DATE: 06/23/2005

TOTAL QTY	UNIT QTY	FIELD BOLTS	LENGTH

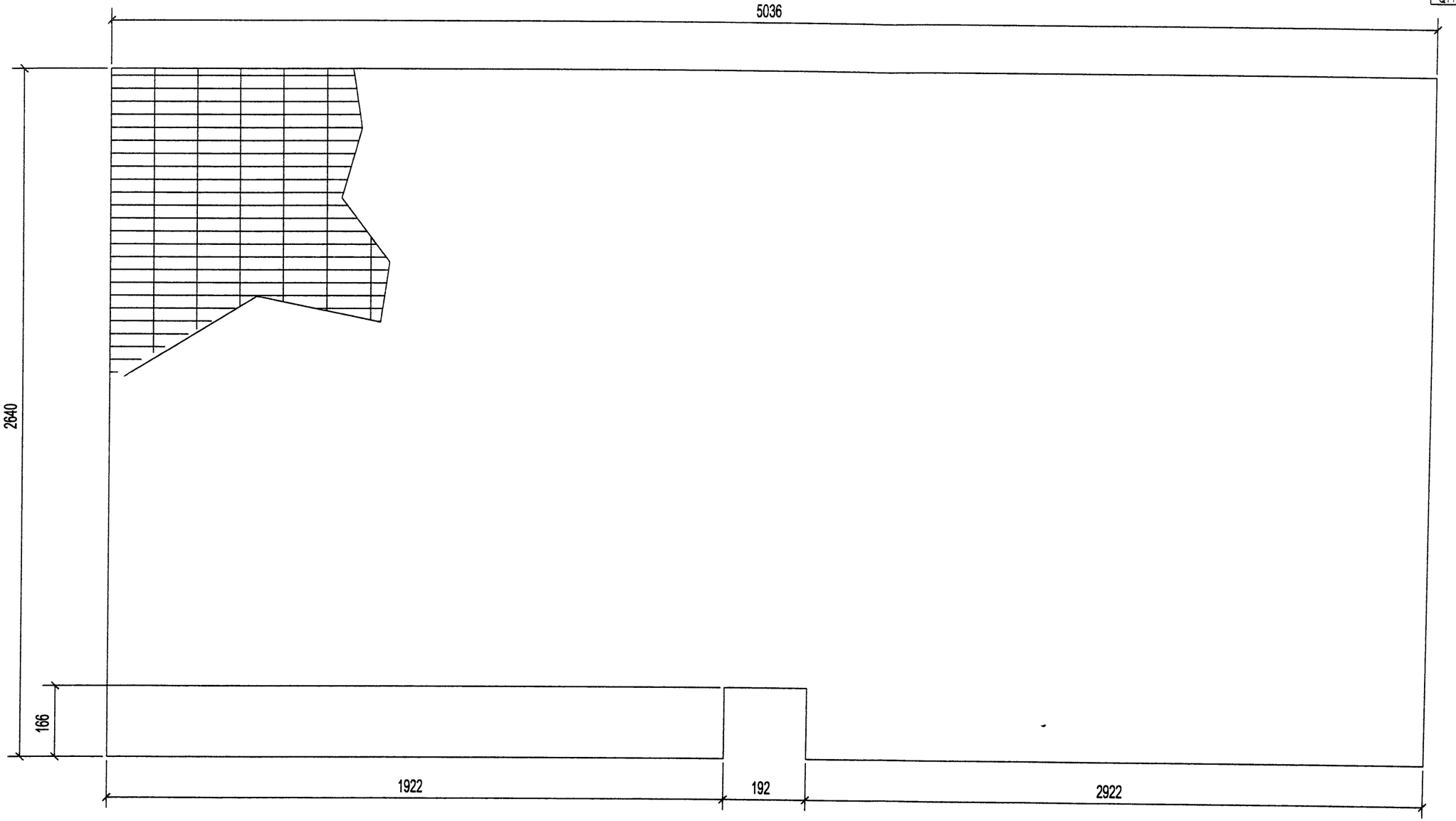

HD 30-102M 32 X 6.4 GRATING GALVANIZED

DIV	GRID LOC.	ELEV.
1	A'-8'/3'-5'	+15.517

1 - GRATING - M1024

TOTAL QTY	UNIT QTY	MARK	DESCRIPTION	LENGTH	UNIT WT	REMARKS
1		M1024	GRATING			
1	1	M1024	PL32X2640	5036	3340	300W

REV	DATE	REMARKS
0	23-06-05	FOR APPROVAL

REF: E001
MATERIAL: A36 U/N
HOLES: 13/16 U/N EDGE DIST: 1"1/4 U/N
WELDS: E70XX BOLTS: 3/4 U/N
SURF. PREP: SEE SPEC
PAINT NOTE: GALVANIZED

STRUCTURE W.W.T IQUALUIT
LOCATION
DWG. TITLE GRATING

DRAWN BY:	CHK'D BY	DATE	JOB NUMBER	DWG NUMBER
–				

TOTAL QTY	UNIT QTY	FIELD BOLTS	LENGTH

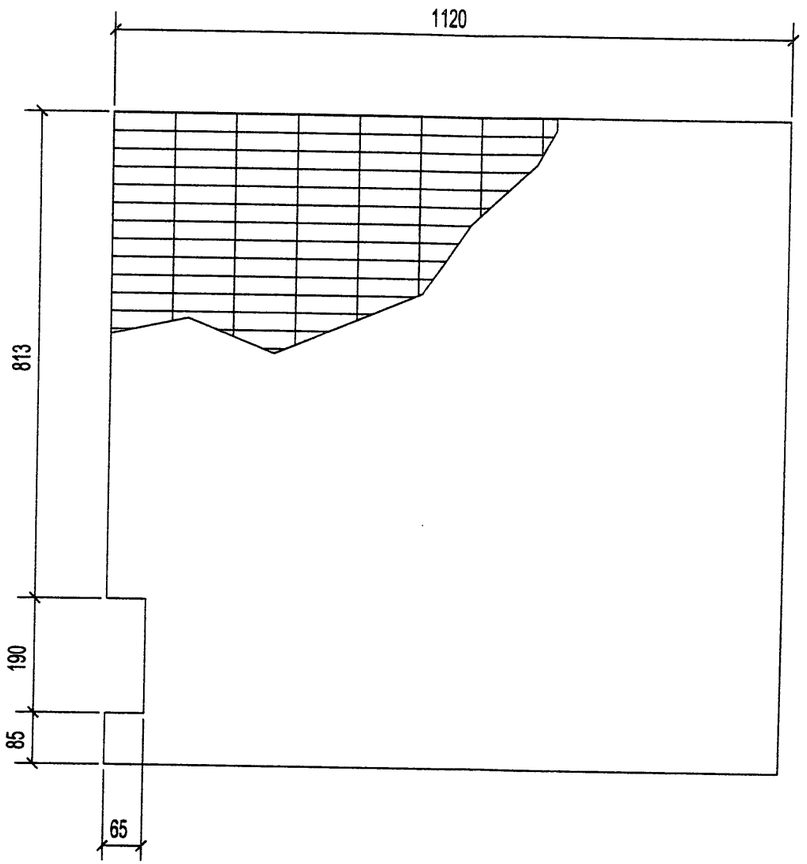

19-4 1 $\frac{1}{4}$" X $\frac{1}{8}$" GRATING GALVANIZED

DIV	GRID LOC.	ELEV.
1	A'-B'/1'-2'	+11.233

1 - GRATING - M1025

TOTAL QTY	UNIT QTY	MARK	DESCRIPTION	LENGTH	UNIT WT.	REMARKS
1		M1025	GRATING			
1	1	M1025	PL32X1088	1120	306	300W

REV	DATE	REMARKS
0	23-06-05	FOR APPROVAL

REF: E001
MATERIAL: A36 U/N
HOLES: 13/16 U/N EDGE DIST: 1"1/4 U/N
WELDS: E70XX BOLTS: 3/4 U/N
SURF. PREP: SEE SPEC
PAINT NOTE: GALVANIZED

STRUCTURE W.W.T IQUALUIT
LOCATION
DWG. TITLE GRATING

DRAWN BY: –	CHK'D BY	DATE	JOB NUMBER	DWG NUMBER

TOTAL QTY	UNIT QTY	FIELD BOLTS	LENGTH

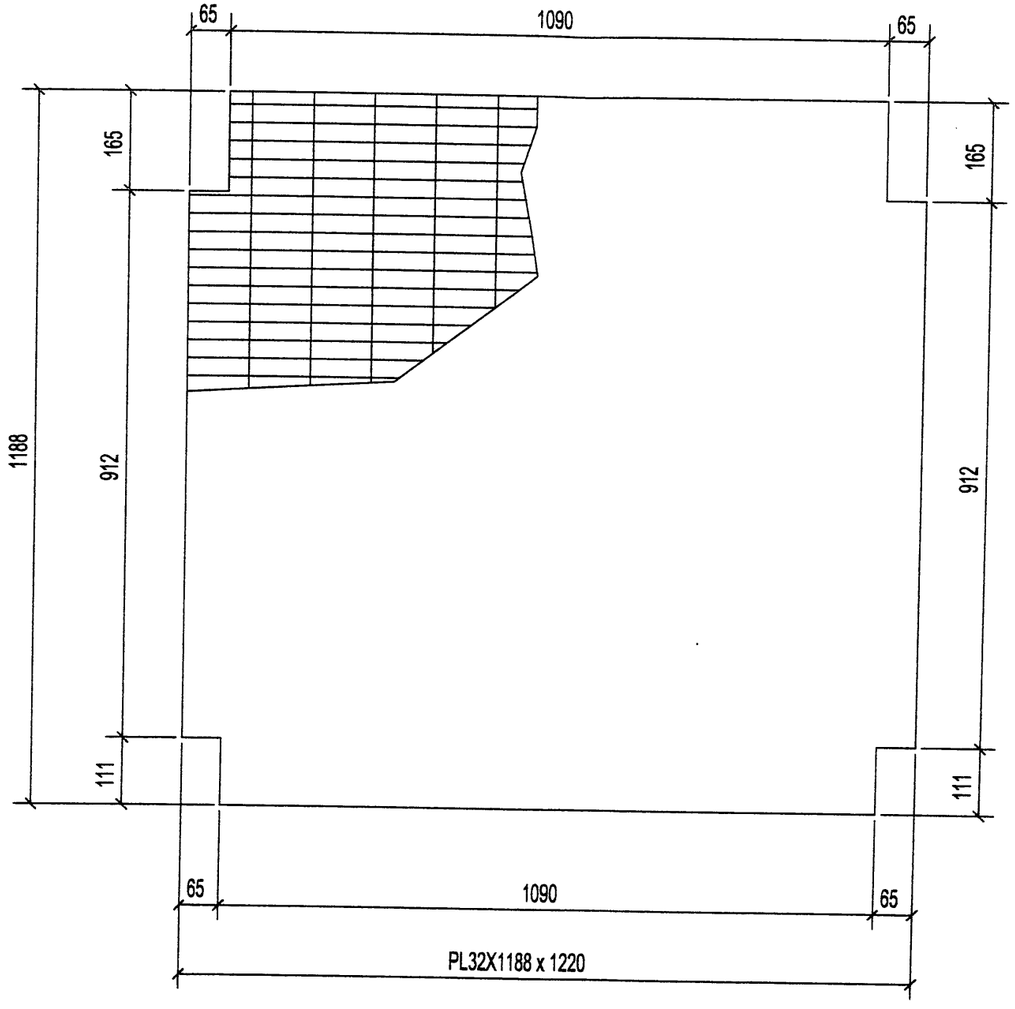

19-4 1 $\frac{1}{4}$" X $\frac{1}{8}$" GRATING GALVANIZED

INGÉNIEUR EXPERT
Joël Rhéaume
100724
Québec

DIV	GRID LOC.	ELEV.
1	1-2/B-A	+13.900

1 - GRATING - M1026

TOTAL QTY	UNIT QTY	MARK	DESCRIPTION	LENGTH	UNIT WT.	REMARKS
1		M1026	GRATING			
1	1	M1026	PL32X1188	1220	364	300W

REV	DATE	REMARKS
0	23-06-05	FOR APPROVAL

REF: E001
MATERIAL: A36 U/N
HOLES: 13/16 U/N EDGE DIST: 1"1/4 U/N
WELDS: E70XX BOLTS: 3/4 U/N
SURF. PREP: SEE SPEC
PAINT NOTE: GALVANIZED

STRUCTURE W.W.T IQUALUIT
LOCATION
DWG. TITLE GRATING

DRAWN BY:	CHK'D BY	DATE	JOB NUMBER	DWG NUMBER
–				

TOTAL QTY	UNIT QTY	FIELD BOLTS	LENGTH

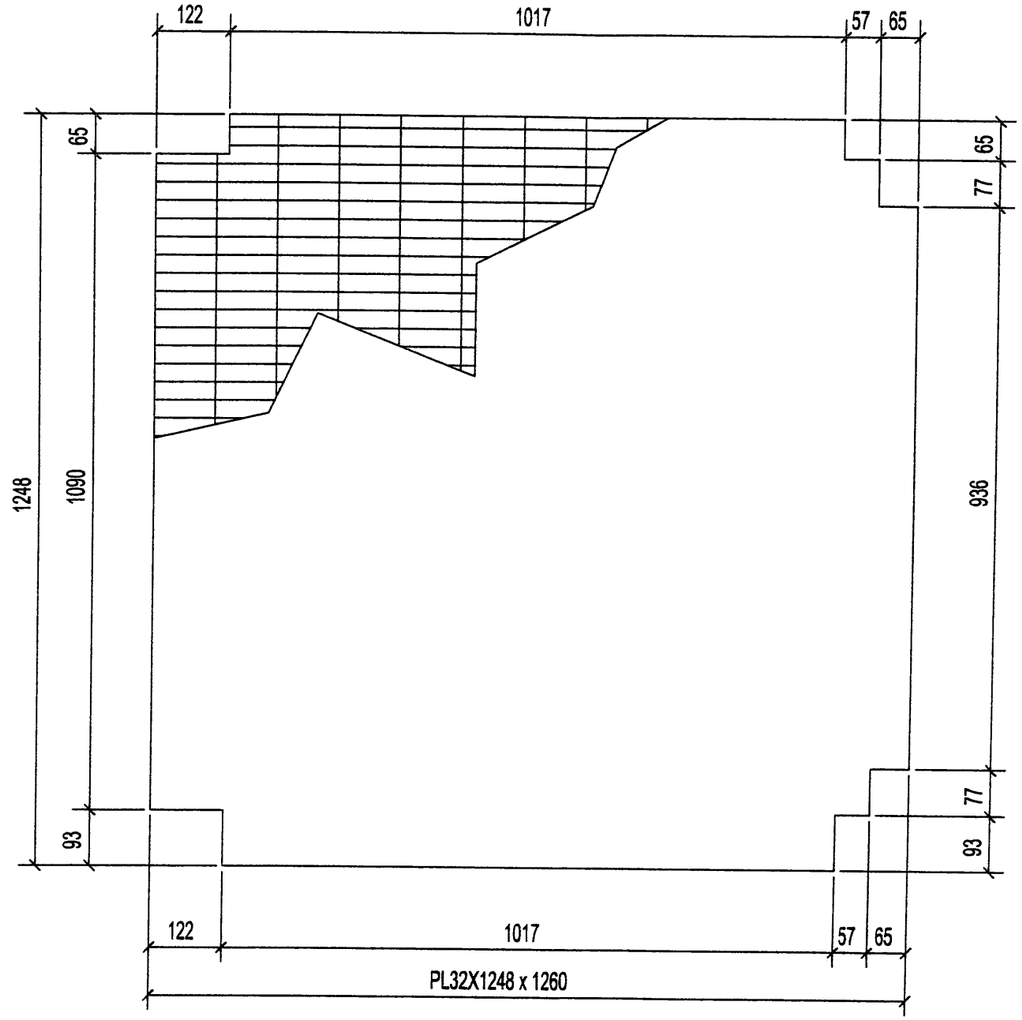

19-4 1 $\frac{1}{4}$" X $\frac{1}{8}$" GRATING GALVANIZED

DIV	GRID LOC.	ELEV.
1	3-4/B-A>	+12.876

1 - GRATING - M1027

TOTAL QTY	UNIT QTY	MARK	DESCRIPTION	LENGTH	UNIT WT.	REMARKS
		M1027	GRATING			
1	1	M1027	PL32X1248	1260	395	300W

REV	DATE	REMARKS
0	23-06-05	FOR APPROVAL

REF: E001
MATERIAL: A36 U/N
HOLES: 13/16 U/N EDGE DIST: 1"1/4 U/N
WELDS: E70XX BOLTS: 3/4 U/N
SURF. PREP: SEE SPEC
PAINT NOTE: GALVANIZED

Drawing Prepared on 3D-Xsteel

STRUCTURE W.W.T IQUALUIT
LOCATION
DWG. TITLE GRATING

DRAWN BY:	CHK'D BY	DATE	JOB NUMBER	DWG NUMBER	
DATE: 06/23/2005	-		C2005-42	M1027	0

CERTIFIÉ ISO 9002

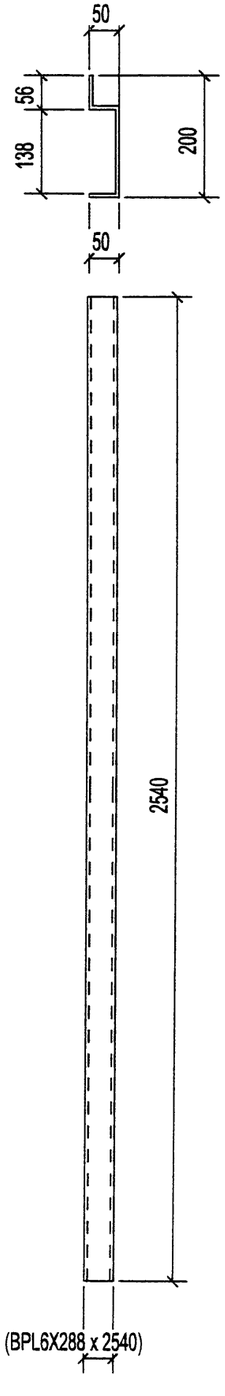

1 - BENTPLA - M1028

QTE	DESCRIPTION
BOULONS DE CHANTIER	

QTE	MARQUE	DESCRIPTION	LONG.	REMARKS
1	M1028	BENTPLATE		
1	M1028	BPL6X288	2540	

QUÉRO METAL
930, DE L'ÉGLISE,
ST-ROMUALD,
QUÉBEC, G6W 5M6
Tel.:(418) 839-0999
Fax:(418) 839-3810
www.queurometal.com

REV.	DESCRIPTION	DATE	PAR
0	FOR APPROVAL	27-06-05	

TROUS	PEINTURE	ACIER
13/16 Ø U / N	GALVANIZED	300W U/N

DESSINER PAR	VÉRIFIER PAR	REV.
A.P. 06/27/2005	-	0

PROJET: W.W.T IQUALUIT

DIV.	CONTRAT	
E001	C2005-42	M1028

INGÉNIEUR CONSEIL
Joël Rhéaume
100724
QUÉBEC

DIV	GRID LOC.	ELEV.
1	A'/1'-3'	+14.202
1	A'/3'-5'	+14.202

CERTIFIÉ ISO 9002

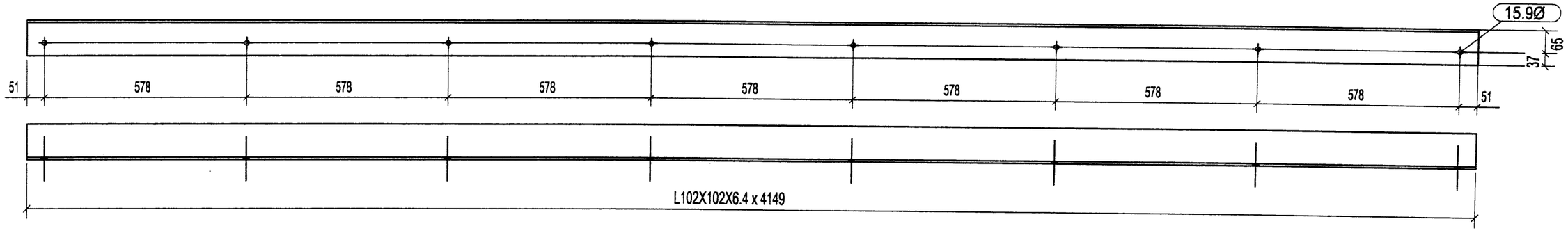

2 - CONTOUR - M1029

8	HVA_1/2"DIA_5"
QTE	DESCRIPTION
BOULONS DE CHANTIER	

QTE	MARQUE	DESCRIPTION	LONG.	REMARKS
2	M1029	CONTOUR		
2	M1029	L102X102X6.4	4149	

QUÉRO METAL
330, DE L'ÉGLISE,
ST-ROMUALD,
QUÉBEC, G6W 5M6
Tél.:(418) 839-0999
Fax:(418) 839-3810
www.querometal.com

REV.	DESCRIPTION	DATE	PAR
0	FOR APPROVAL	29-06-05	

TROUS	PEINTURE	ACIER
13/16 Ø U / N	GALVANIZED	300W U/N

DESSINER PAR	VÉRIFIER PAR	REV.
A.P. 06/29/2005	B.P.	0

PROJET: W.W.T IQUALUIT

DIV.	CONTRAT	
E001	C2005-42	M1029

DIV	GRID LOC.	ELEV.
1	B'-C'/5'	+14.202

CERTIFIÉ ISO 9002

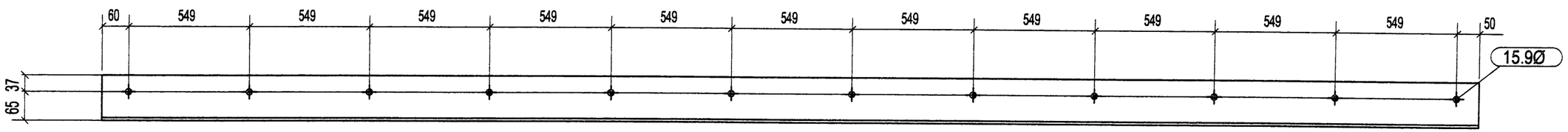

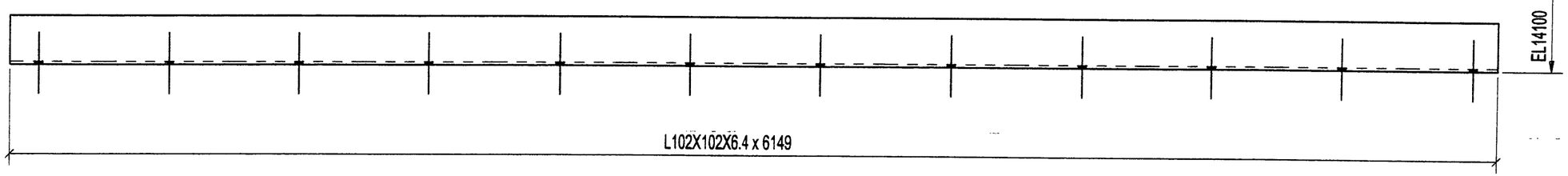

1 - CONTOUR - M1030

12	HVA_1/2"DIA_5"
QTE	DESCRIPTION
BOULONS DE CHANTIER	

QTE	MARQUE	DESCRIPTION	LONG.	REMARKS
1	M1030	CONTOUR		
1	M1030	L102X102X6.4	6149	

QUÉRO METAL
930, DE L'ÉGLISE,
ST-ROMUALD,
QUÉBEC, G6W 5M6
Tel.:(418) 839-0959
Fax:(418) 839-3810
www.querometal.com

REV.	DESCRIPTION	DATE	PAR
0	FOR APPROVAL	29-06-05	

TROUS	PEINTURE	ACIER
13/16 Ø U/N	GALVANIZED	300W U/N

DESSINER PAR	VÉRIFIER PAR	REV.
A.P. 06/28/2005	B.P.	0

PROJET: W.W.T IQUALUIT

DIV.	CONTRAT	
E001	C2005-42	M1030

DIV	GRID LOC.	ELEV.
1	A'-B'/1'	+14.202

CERTIFIÉ ISO 9002

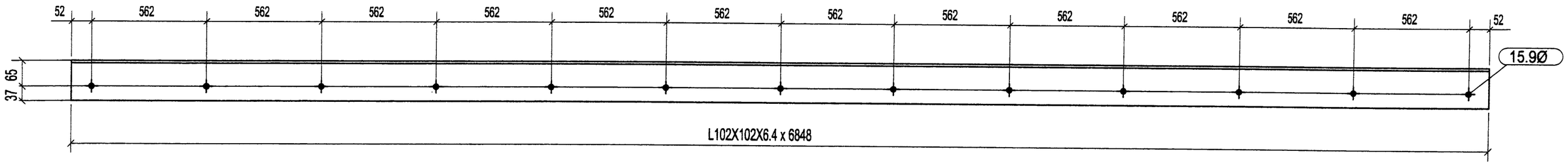

1 - CONTOUR - M1031

13	HVA_1/2"DIA_5"
QTE	DESCRIPTION
BOULONS DE CHANTIER	

QTE	MARQUE	DESCRIPTION	LONG.	REMARKS
1	M1031	CONTOUR		
1	M1031	L102X102X6.4	6848	

QUEBEC METAL
830, DE L'ÉGLISE,
ST-ROMUALD,
QUEBEC, G6W 5M6
Tel.:(418) 839-0999
Fax:(418) 839-3810
www.quebecmetal.com

REV.	DESCRIPTION	DATE	PAR
0	FOR APPROVAL	29-06-05	

TROUS	PEINTURE	ACIER
13/16 Ø U / N	GALVANIZED	300W U/N

DESSINER PAR	VÉRIFIER PAR	REV.
A.P. 06/29/2005	B.P.	0

PROJET: W.W.T IQUALUIT

DIV	CONTRAT	
E001	C2005-42	M1031

DIV	GRID LOC.	ELEV.
1	3-4/B	+16.599
1	4/B	+16.599

CERTIFIÉ ISO 9002

HOLD

PLEASE CONFIRM LENGHT

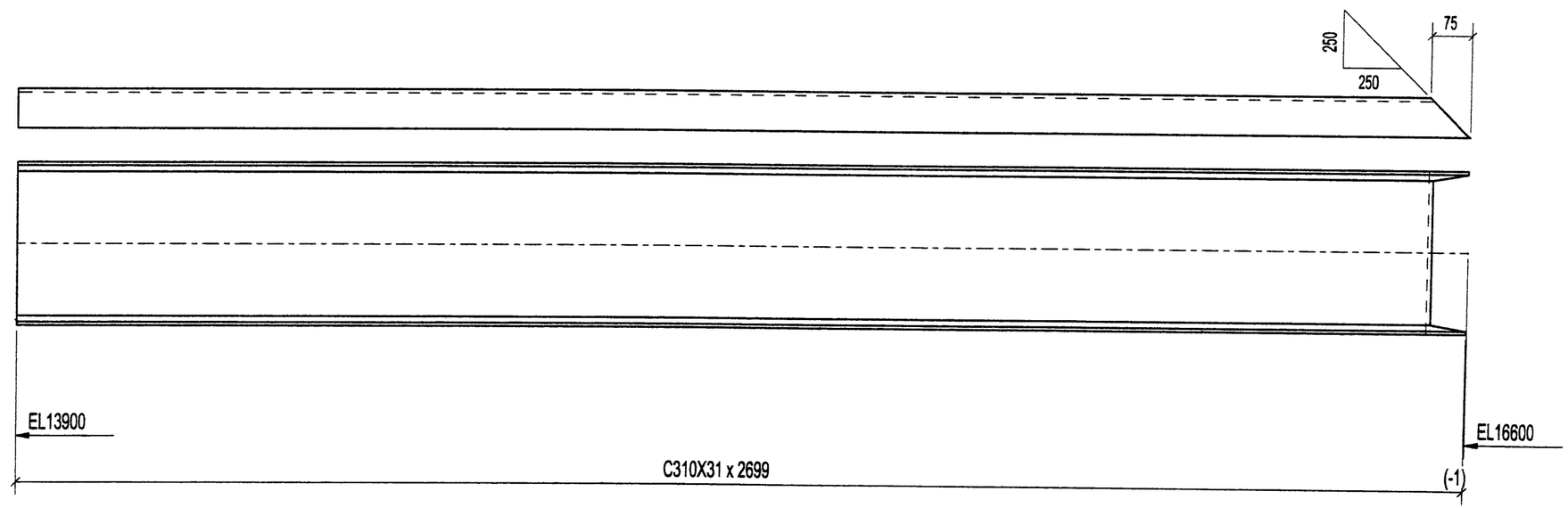

2 - FRAME - M1032

QTE	DESCRIPTION
BOULONS DE CHANTIER	

QTE	MARQUE	DESCRIPTION	LONG.	REMARKS
2	M1032	FRAME		
2	M1032	C310X31	2699	

QUEBEC METAL inc.
930, DE L'ÉGLISE,
ST-ROMUALD,
QUÉBEC, G6W 5M6
Tel.:(418) 839-0669
Fax:(418) 839-3810
www.quebecmetal.com

REV.	DESCRIPTION	DATE	PAR
0	FOR APPROVAL	29-06-05	

TROUS	PEINTURE	ACIER
13/16 Ø U/N	GALVANIZED	300W U/N

DESSINER PAR	VÉRIFIER PAR	REV.
A.P. 06/28/2005	B.P	0

PROJET: W.W.T IQUALUIT

DIV	CONTRAT	
E001	C2005-42	M1032

DIV	GRID LOC.	ELEV.
1	3-4/B	+16.600

CERTIFIÉ ISO 9002

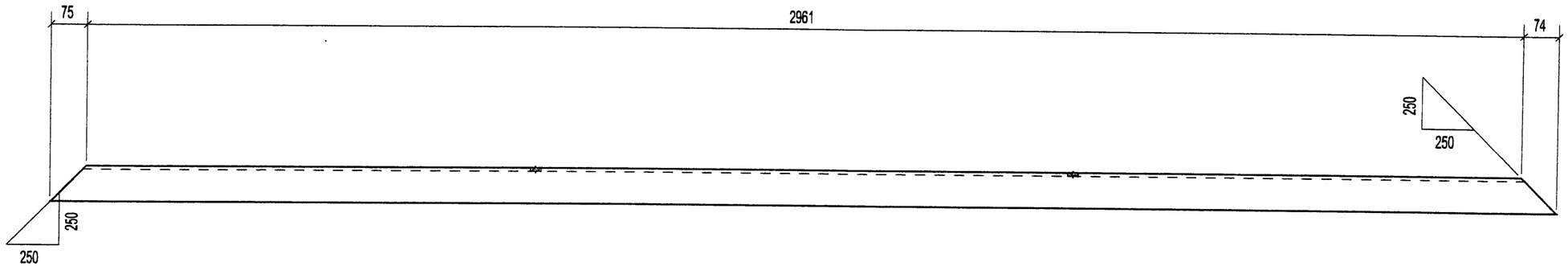

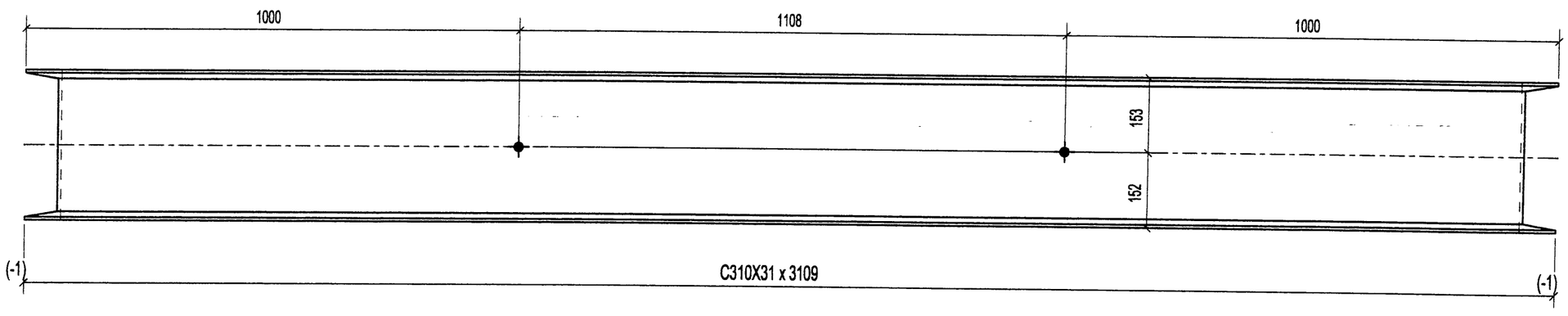

1 - FRAME - M1033

QTE	DESCRIPTION
BOULONS DE CHANTIER	

QTE	MARQUE	DESCRIPTION	LONG.	REMARKS
1	M1033	FRAME		
1	M1033	C310X31	3109	

GUERO METAL
930, DE L'ÉGLISE,
ST-ROMUALD,
QUÉBEC, G6W 5M6
Tel.:(418) 839-0999
Fax:(418) 839-3810

REV.	DESCRIPTION	DATE	PAR
0	FOR APPROVAL	29-06-05	

TROUS	PEINTURE	ACIER
13/16 Ø U / N	GALVANIZED	300W U/N

DESSINER PAR	VÉRIFIER PAR	REV.
A.P. 06/29/2005	B.P.	0

PROJET: W.W.T IQUALUIT

DIV	CONTRAT	
E001	C2005-42	M1033

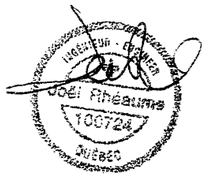

* 6-10 X 100 LONG. NELSON STUDS TO BE PPROVIDED FOR WORKSHOP ASSEMBLY

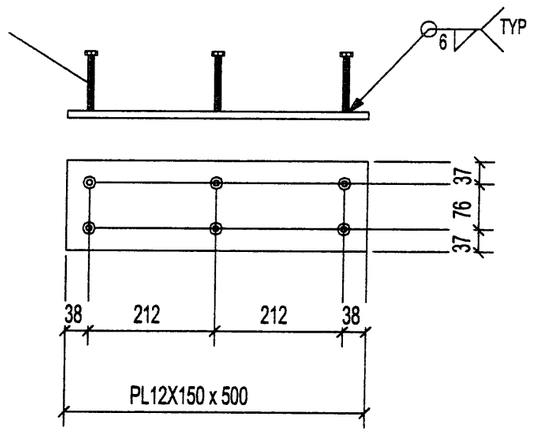

1 - PLATE - M1039

QTE	DESCRIPTION
BOULONS DE CHANTIER	

QTE	MARQUE	DESCRIPTION	LONG.	REMARKS
1	M1039	PLATE		
1	M1039	PL12X150	500	

GUERO METAL
930, DE L'ÉGLISE,
ST-ROMUALD,
QUÉBEC, G6W 5M6
Tel.:(418) 839-0959
Fax:(418) 839-3810

REV.	DESCRIPTION	DATE	PAR
0	FOR APPROVAL	27-06-05	

TROUS	PEINTURE	ACIER	
13/16 Ø U / N	NO PAINT	300W U/N	

DESSINER PAR	VÉRIFIER PAR	REV.
A.P 06/27/2005	-	0

PROJET: W.W.T IQUALUIT

DIV.	CONTRAT

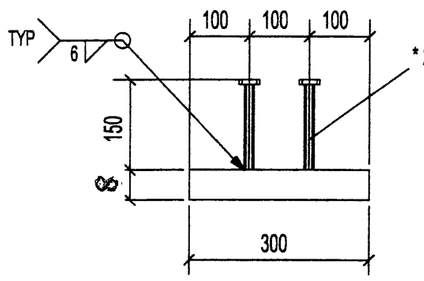

* 2-16 X 150 LONG. NELSON STUDS TO BE PPROVIDED FOR WORKSHOP ASSEMBLY

1 - PLATE - M1040

QTE	DESCRIPTION
1	M1040
1	M1040

1	M1040	PLATE		
1	M1040	PL8X50	300	

QTE	DESCRIPTION	LONG.	REMARKS
BOULONS DE CHANTIER			

REV.	DESCRIPTION	DATE	PAR
0	FOR APPROVAL	27-06-05	

TROUS: 13/16 Ø U/N	PEINTURE: NO PAINT	ACIER: 300W U/N	
DESSINER PAR: A.P. 06/27/2005	VÉRIFIER PAR: -	REV.: 0	

PROJET: W.W.T IQUALUIT

DIV. F001	CONTRAT C2005-42	M1040

GUERO METAL
930, DE L'ÉGLISE,
ST-ROMUALD,
QUÉBEC, G6W 5M6
Tel.:(418) 839-0959
Fax:(418) 839-3810

DIV	GRID LOC.	ELEV.
1	A'-B'/5'	+14.300

CERTIFIÉ ISO 9002

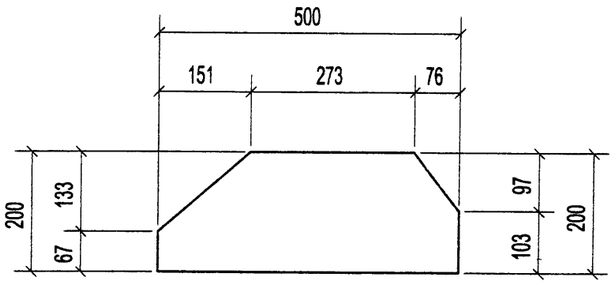

1 - PLATE - M1041

QTE	DESCRIPTION
BOULONS DE CHANTIER	

QTE	MARQUE	DESCRIPTION	LONG.	REMARKS
1	M1041	PLATE		
1	M1041	PL13X200	500	

QUÉRO MÉTAL
830, DE L'ÉGLISE,
ST-ROMUALD,
QUÉBEC, G6W 5M6
Tel.:(418) 839-0959
Fax:(418) 839-3810
www.queerometal.com

REV.	DESCRIPTION	DATE	PAR
0	FOR APPROVAL	29-06-05	

TROUS	PEINTURE	ACIER
13/16 Ø U/N	GALVANIZED	300W U/N

DESSINER PAR	VÉRIFIER PAR	REV.
A.P. 06/28/2005	B.P.	0

PROJET: W.W.T IQUALUIT

DIV.	CONTRAT	
E001	C2005-42	M1041

MOULURES 2000 INC.

MOULURES D'ACIER ET D'ALUMINIUM, VIS À TÔLE, ACCESSOIRES DÉCORATIFS

1/3

DATE 29 JUIN 05

CLIENT KUDLIK CONST. LTD.

SPECIAL FLASHINGS / FASCIA

DE COMMANDE _____

JOB WATER TRETMENT IQALUIT

QTÉ	MOULURE DESCRIPTION	COULEUR QC	GA
70 P/L	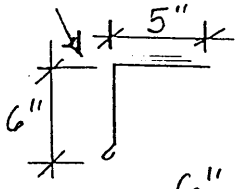	BLEU HERON OC-6079 (METAL FASCIA)	CAL 26
100 P/L	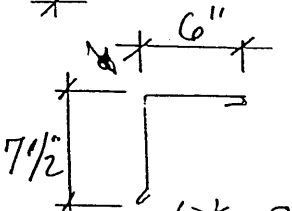	BLEU HERON OC-6079 (METAL FASCIA)	CAL 26
40 P/L	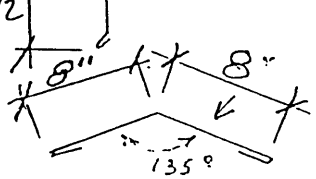	BLEU HERON OC-6079	CAL 26
50 P/L	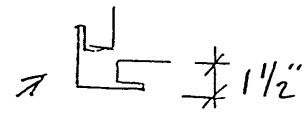	BLEU HERON OC-6079	CAL 26
20 P/L	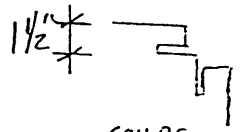	BLEU HERON OC-6079	CAL 26
810 P/L	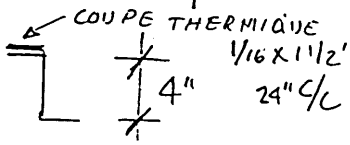	GALV.	CAL 16
400 P/L	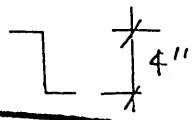	GALV.	CAL 16
160 P/L	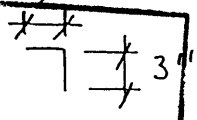	GALV.	CAL 18

DATE DE LIVRAISON _____

REVIEWED

☐ REVIEWED AS NOTED

☐ RESUBMIT

DATE 14/07/05

SIGNATURE

KUDLIK CONSTRUCTION LTD
P.O. BOX 727, 1519 FEDERAL ROAD
IQUALUIT, NUNAVUT X0A 0H0
PHONE: (867) 979-1166
FAX: (867) 979-1160

MS
04/07/2005

MOULURES 2000 INC.

MOULURES D'ACIER ET D'ALUMINIUM, VIS À TÔLE, ACCESSOIRES DÉCORATIFS

2/3

DATE 29 JUIN 05

CLIENT KUDLIK CONST LTD

DE COMMANDE _____ JOB WATER TRETMENT IQALUIT

QTÉ	MOULURE DESCRIPTION	COULEUR QC	GA
170 P/L	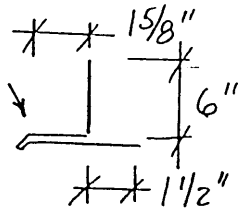	BLEU HERON QC-6079	CAL 26
170 P/L	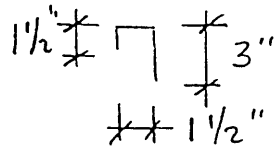	BLEU HERON QC-6079	CAL 26
30 P/L	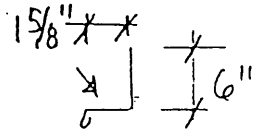	BLEU HERON QC-6079	CAL 26
30 P/L	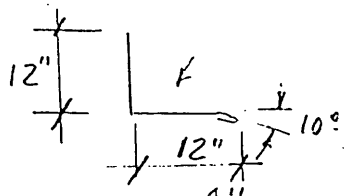	BLEU HERON QC-6079	CAL 26
100 P/L	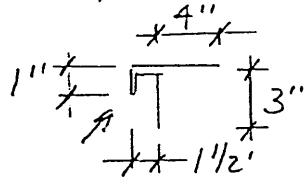	BLEU HERON QC-6079	CAL 26
50 P/L	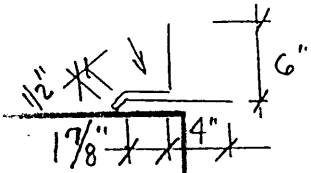	BLEU HERON QC-6079	CAL 26

☑ REVIEWED

☐ REVIEWED AS NOTED

DATE DE LIVRAISON _____

☐ RESUBMIT

DATE 14/01/05

SIGNATURE

KUDLIK CONSTRUCTION LTD
P.O. BOX 727, 1519 FEDERAL ROAD
IQUALUIT, NUNAVUT X0A 0H0
PHONE: (867) 979-1168
FAX: (867) 979-1165

MOULURES 2000 INC.

MOULURES D'ACIER ET D'ALUMINIUM, VIS À TÔLE, ACCESSOIRES DÉCORATIFS

3/3

DATE 29 JUIN 05

CLIENT KUDLIK CONSTR. LTD.

DE COMMANDE _____ JOB WATER TREATMENT IQALUIT

QTÉ	MOULURE DESCRIPTION	COULEUR QC	GA
310 P/L	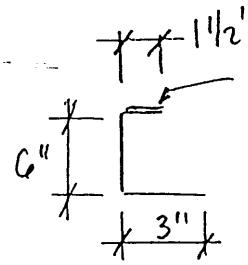		GALV. CAL 18
288 MCX	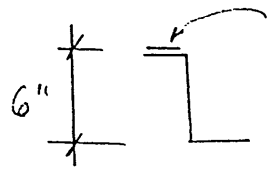 ENCOCHE POUR SUITEME (L-800)		GALV. CAL 18

☐ REVIEWED

☐ REVIEWED AS NOTED

☐ RESUBMIT

DATE 14/07/05

SIGNATURE

KUDLIK CONSTRUCTION LTD
P.O. BOX 727, 1519 FEDERAL ROAD
IQUALUIT, NUNAVUT X0A 0H0
PHONE: (867) 979-1166
FAX: (867) 979-1165

DATE DE LIVRAISON _____

CL435 GAGE 26 (No barriers series) - HERON BLUE
FOR WALL & ROOF CLADDING

RÉVÊTEMENT CL435

impérial

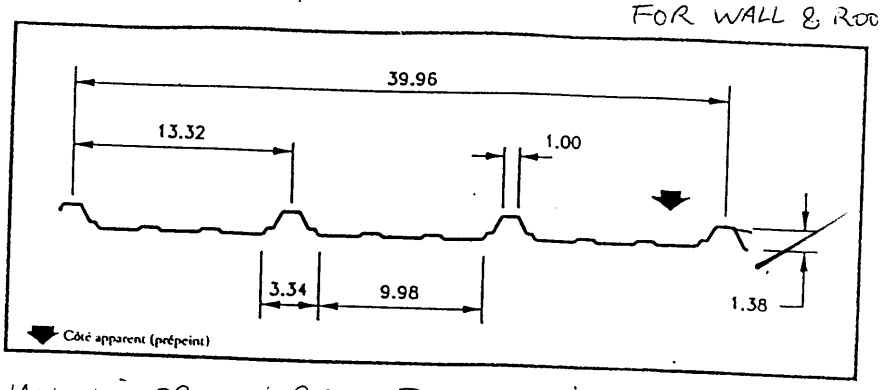

→ WALL LINER : L800 BONE WHITE 24 G.

CALCUL AUX ÉTATS LIMITES

PROPRIÉTÉS PHYSIQUES

Épaisseur nominale de l'acier de base (pouces)	Enduit Z275, épaisseur nominale (pouces)	Masse de l'enduit Z275 (lb/pi²)	Modules de section		Moment d'inertie à mi-portée (pouces⁴)	Résistance pondérée			
			Mi-portée (pouces³)	Support (pouces³)		Moment		Réaction	
						Mi-portée (lb-po)	Support (lb-po)	Extrémité (livres)	Intermédiaires (livres)
.018	.020	0.969	0.0389	0.0346	0.0488	1155.3	1027.6	110	164
.024	.026	1.253	0.0560	0.0474	0.0645	1663.2	1407.8	185	322
.030	.032	1.542	0.0696	0.0606	0.0803	2067.1	1799.8	281	541
.036	.038	1.831	0.0830	0.0742	0.0959	2465.1	2203.7	391	815
.048	.050	—	—	—	—	—	—	—	—

TABLEAU DES CHARGES

Écartement des supports		1 Portée Épaisseur nominale de l'acier de base (pouces)					2 Portée Épaisseur nominale de l'acier de base (pouces)					3 Portée Épaisseur nominale de l'acier de base (pouces)				
		.018	.024	.030	.036	.048	.018	.024	.030	.036	.048	.018	.024	.030	.036	.048
3'-0"	B	49* f	82 f	102 f	122 f		29* f	57* f	89 f	109 f		33* f	65* f	109* f	136 f	
	D															
3'-6"	B	42* f	60 f	75 f	89 f		25* f	49* f	65 f	80 f		28* f	56* f	82 f	100 f	
	D															
4'-0"	B	32 f	46 f	57 f	68 f		22* f	39 f	50 f	61 f		25* f	49* f	62 f	77 f	
	D															
4'-6"	B	25 f	37 f	45 f	54 f			31 f	40 f	48 f		22* f	39 f	49 f	60 f	
	D															
5'-0"	B	21 f	30 f	37 f	44 f			25 f	32 f	39 f			31 f	40 f	49 f	
	D															
5'-6"	B		24 f	30 f	36 f			21 f	26 f	32 f			26 f	33 f	40 f	
	D															
6'-0"	B		21 f	26 f	30 f				22 f	27 f			22 f	28 f	34 f	
	D															
6'-6"	B			22 f	26 f					23 f				24 f	29 f	
	D															
7'-0"	B				22 f									20 f	25 f	
	D															
7'-6"	B														22 f	
	D															
8'-0"	B															
	D															

Note

1. Les propriétés et les charges sont calculées pour de l'acier de Catégorie 33 ayant une contrainte à la limite élastique minimale de 33,000 lb/po² et une contrainte maximale de 29,700 lb/po² pour les charges pondérées.
2. Les chiffres de la colonne B indiquent la capacité de chargement en fonction de la résistance. La résistance inscrite en B doit être vérifiée en se référant à l'équation suivante: [Surcharge spécifiée] + [0.833 x Charge permanente spécifiée].
3. Les chiffres de la colonne D indiquent la capacité de chargement en fonction d'un fléchissement de 1/180 de la portée. Lorsque le fléchissement permis est égal à 1/90 de la portée, les valeurs de la colonne D peuvent être doublées mais sans dépasser la valeur indiquée à la colonne B. La lettre « f » indique que c'est la charge pour la résistance qui gouverne. La résistance au fléchissement doit être vérifiée en se référant aux charges spécifiées.
4. L'astérisque « * » accolé à un chiffre indique que celui-ci a été réduit pour tenir compte de l'écrasement de l'âme.

APPROVED AS NOTED

KUDLIK CONSTRUCTION LTD
P.O. BOX 727 1519 FEDERAL ROAD
IQUALUIT, NUNAVUT X0A 0H0
PHONE (867) 979-1166
FAX: (867) 979-1167

Les Agences R. Cantin inc.
705, avenue Godin
Vanier (Québec)
G1M 3E6
Tél. : (418) 681-7522
Fax. : (418) 681-1075
Fax. : (418) 681-4010

☑ REVIEWED
☐ REVIEWED AS NOTED
☐ RESUBMIT
DATE Jun 23/05
SIGNATURE

~~DESSINS D'ATELIER POUR APPROBATION~~

SHOP DRAWINGS FOR APPROVAL.

PROJET : IQALUIT
WWTP PLANT CONVERSION
ET EXPANSION PHASE I
CITY OF IQALUIT

ENTREPRENEUR : KUDLIK CONST.
PO BOX 727
IQALUIT NU
X0A 0H0

ARCHITECTE :

KUDLIK CONSTRUCTION LTD
P.O. BOX 727, 1519 FEDERAL ROAD
IQUALUIT, NUNAVUT X0A 0H0
PHONE: (867) 979-1166
FAX: (867) 979-1[illegible]
16/06/05

DATE : JUNE 14 2005 **PRÉPARÉ PAR :** *Yves Fortier AHC*

TECHNICALITÉS
MAIN DE PORTE

La main d'une porte est déterminée dans la position fermée de l'extérieur ou du côté de la clé. Elle doit être spécifiée pour toutes les serrures pour une position correcte du cylindre en manufacture.

MAIN DROITE	MAIN GAUCHE	MAIN DROITE RENVERSÉE	MAIN GAUCHE RENVERSÉE
La porte s'ouvre vers <u>l'INTÉRIEUR</u> (POUSSER)	La porte s'ouvre vers <u>l'INTÉRIEUR</u> (POUSSER)	La porte s'ouvre vers <u>l'EXTÉRIEUR</u> (TIRER)	La porte s'ouvre vers <u>l'EXTÉRIEUR</u> (TIRER)
Charnières à droite. 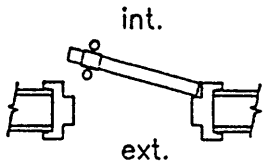	Charnière à gauche. 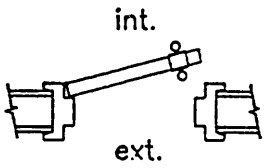	Charnières à droite. 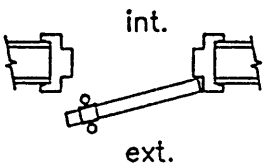	Charnières à gauche. 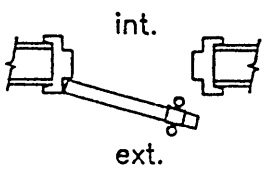

OUVERTURE DE CADRE REQUISE

Pour une façade de 2"

TYPE A

Largeur de la porte + 2"

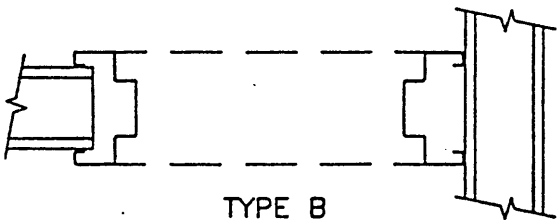

TYPE B

Largeur de la porte + 3"

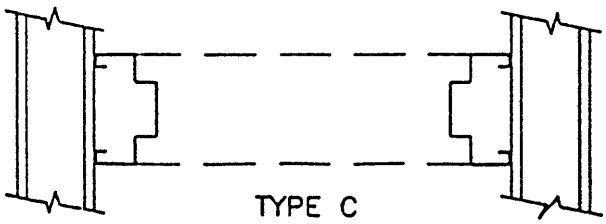

TYPE C

Largeur de la porte + 4"

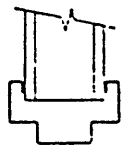

TYPE D

Hauteur de la porte + 1"

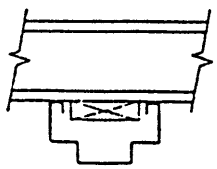

TYPE E

Hauteur de la porte + 2"

JOB: WASTEWATER TREATMENT PLANT, IQALUIT

KUDLIK CONSTRUCTION LTD
P.O. BOX 727, 1519 FEDERAL ROAD
IQUALUIT, NUNAVUT X0A 0H0
PHONE: (867) 979-1166
FAX: (867) 979-1169

101 HEAD WORK 914X2032X45 LHR

GROUPE 01

3	Hinges	FBB199 114X101 NRP 630 STANLEY
1	Exit device	98TP X 990TP 628 VON DUPRIN
1	Rim cylinder	20-021C 626 SCHLAGE
1	Door closer	4040-S-CUSH 689 LCN
2	Weatherstrip	1650 628 2134mm SIU
1	Weatherstrip	17V 628 914mm SIU (HEAD)
1	Thresholds	AB4 X ABBT X AB3 AL. 914mm SIU
1	Door botton weatherstrip	2100 628 014mm SIU
1	Door bottom threshold	AB2 X VINYL AL. 914mm SIU

☑ REVIEWED
☐ REVIEWED AS NOTED
☐ RESUBMIT
DATE Jan 23/05
SIGNATURE

101B HEAD WORK *813X2032X45 RH

GROUPE 02

3	Hinges	FBB168 114X101 652 STANLEY
1	Latchset	ND10S RHO 626 SCHLAGE
1	Door closer	4040-DA 689 LCN
1	Door stop	218 626 GALLERY

102 STAIR LOBBY 914X2035X45 LHR

GROUPE 02

3	Hinges	FBB168 114X101 652 STANLEY
1	Latchset	ND10S RHO 626 SCHLAGE
1	Door closer	4040-DA 689 LCN
1	Door stop	218 626 GALLERY

102A STAIR LOBBY 914X2032X45 LHR

GROUPE 01

3	Hinges	FBB199 114X101 NRP 630 STANLEY
1	Exit device	98TP X 990TP 628 VON DUPRIN
1	Rim cylinder	20-021C 626 SCHLAGE
1	Door closer	4040-S-CUSH 689 LCN
2	Weatherstrip	1650 628 2134mm SIU
1	Weatherstrip	17V 628 914mm SIU (HEAD)
1	Thresholds	AB4 X ABBT X AB3 AL. 914mm SIU
1	Door botton weatherstrip	2100 628 014mm SIU
1	Door bottom threshold	AB2 X VINYL AL. 914mm SIU

KUDLIK CONSTRUCTION LTD
P.O. BOX 727, 1519 FEDERAL ROAD
IQUALUIT, NUNAVUT X0A 0H0
PHONE: (867) 979-1166
FAX: (867) 979-1169

201	STAIR	914X2032X45	RHR	

GROUPE 02

3	Hinges	FBB168 114X101 652 STANLEY
1	Latchset	ND10S RHO 626 SCHLAGE
1	Door closer	4040-DA 689 LCN
1	Door stop	218 626 GALLERY

202	HEADWORK	914X2032X45	RH	

GROUPE 02

3	Hinges	FBB168 114X101 652 STANLEY
1	Latchset	ND10S RHO 626 SCHLAGE
1	Door closer	4040-DA 689 LCN
1	Door stop	218 626 GALLERY

203	ELECT. ROOM	914X2032X45	RH	

GROUPE 02**

3	Hinges	FBB168 114X101 652 STANLEY
1	Lockset	ND80PD RHO 626 SCHLAGE
1	Door closer	4040-DA 689 LCN
1	Door stop	218 626 GALLERY

REVIEWED
REVIEWED AS NOTED
REJECTED
DATE 23 Jun/05
SIGNATURE

204	LAB	914X2032X45	LHR	

GROUPE 04

3	Hinges	FBB168 114X101 652 STANLEY
1	Lockset	ND53PD RHO 626 SCHLAGE
1	Door stop	218 626 GALLERY

205	VEST.	914X2032X45	*	

GROUPE 01

3	Hinges	FBB199 114X101 NRP 630 STANLEY
1	Exit device	98TP X 990TP 628 VON DUPRIN
1	Rim cylinder	20-021C 626 SCHLAGE
1	Door closer	4040-S-CUSH 689 LCN
2	Weatherstrip	1650 628 2134mm SIU
1	Weatherstrip	17V 628 914mm SIU (HEAD)
1	Thresholds	AB4 X ABBT X AB3 AL. 914mm SIU
1	Door botton weatherstrip	2100 628 014mm SIU
1	Door bottom threshold	AB2 X VINYL AL. 914mm SIU

BORDEREAU DE C RES ET PORTES

Door No.	Areas From	Areas To	Arch. Type	Description Frame Gauge/Type	Description Door/Thick. Gauge/Type	ULC	Nominal size Inside of frame Width X	Nominal size Inside of frame Height Y	Size Outside of frame Width A	Size Outside of frame Height B	Wall C	Attache	Hand of Door	Élév. Frame	Élév. Door		Comment	Hardware
101		HEAD WORK	A	STEEL 16G WELDED TH. BRO.	STEEL/45 18G POLYU-RETHANE	-	914	2032			146	6	LHR	2	A			
101B		HEAD WORK	A	STEEL 16G KD	STEEL/45 18G HONEYCOMB	45	*813	2032			*	9	RH	1	A			
102		STAIR LOBBY	B	STEEL 16G KD	STEEL/45 18G HONEYCOMB	45	914	2032			124	9	LHR	1	B			
102B		STAIR LOBBY	A	STEEL 16G WELDED TH. BRO.	STEEL/45 18G POLYU-RETHANE	-	914	2032			146	6	LHR	2	A			
201		STAIR	B	STEEL 16G KD	STEEL/45 18G HONEYCOMB	45	914	2032			124	9	RHR	1	B			
202		HEAD WORK	B	STEEL 16G KD	STEEL/45 18G HONEYCOMB	45	914	2032			*	9	RH	1	B			
203		ELECT. ROOM	A	STEEL 16G KD	STEEL/45 18G HONEYCOMB	45	914	2032			124	9	RH	1	A			
204		LAB	A	STEEL 16G KD	STEEL/45 18G HONEYCOMB	-	914	2032			118	9	LH	1	A			
205		VEST.	A	STEEL 16G WELDED TH. BRO.	STEEL/45 18G POLYU-RETHANE	-	914	2032			*	6	*	2	A			

KUDLIK CONSTRUCTION LTD
P.O. BOX 727, 15 FEDERAL ROAD
IQALUIT, NUNAVUT X0A 0H0
PHONE: (867) 979-1166
(867) 979-1169
FAX:

REVIEWED
REVIEWED AS NOTED
RESUBMIT
SIGNATURE
DATE 23 M 05

CONTRACTOR: KUDLIK

JOB: Wastewater Treatment Plant Iqaluit

ARCHITECTE:

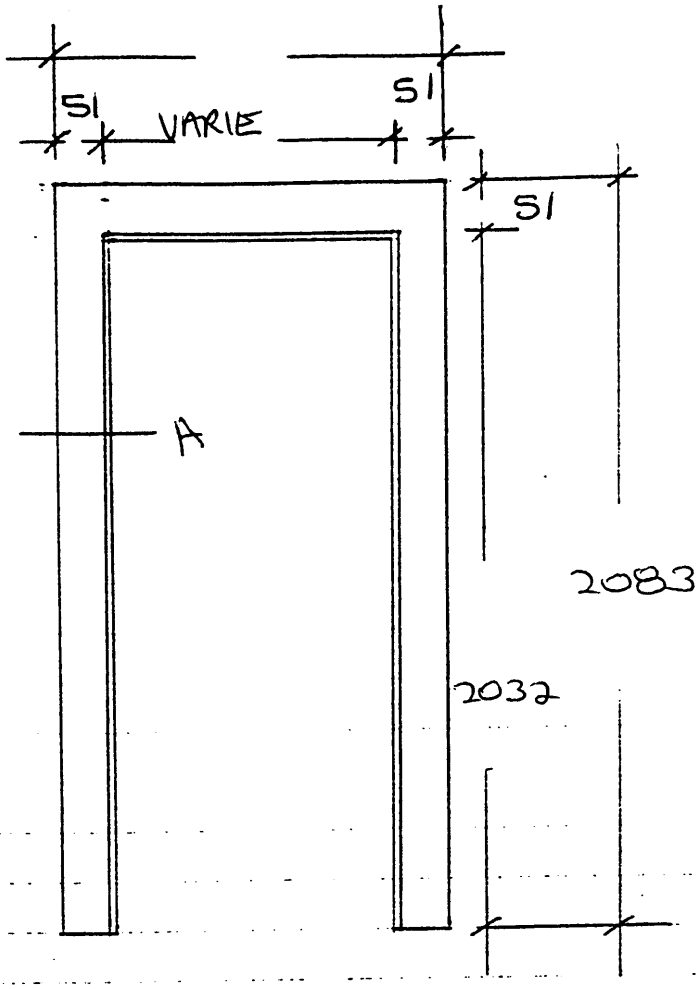

ELEV-1

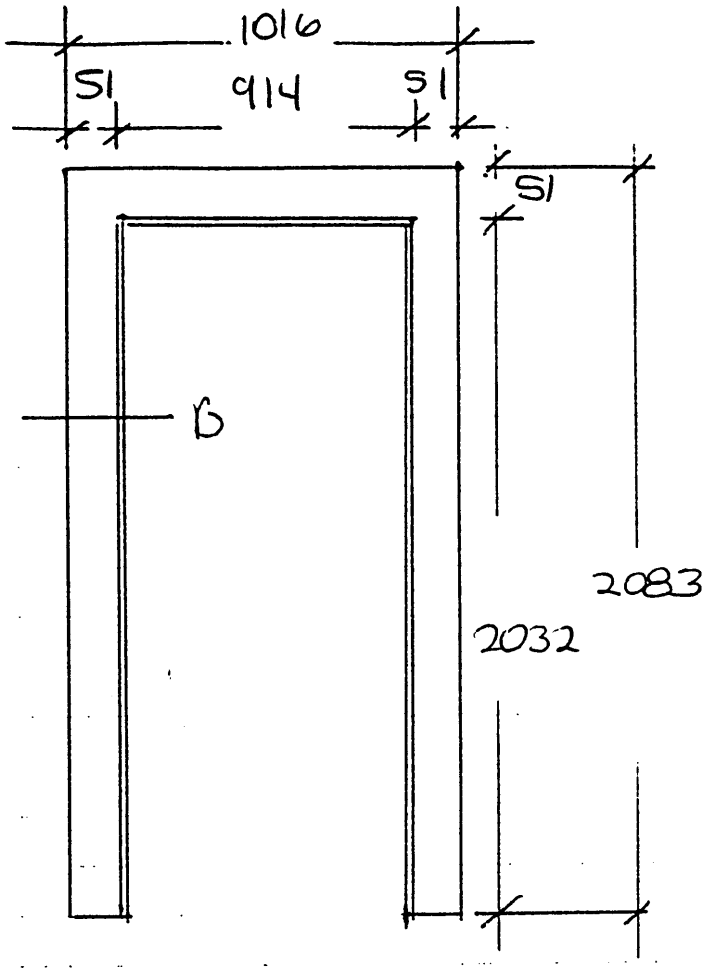

ELEV-2

KUDLIK CONSTRUCTION LTD
P.O. BOX 727, 1519 FEDERAL ROAD
IQUALUIT, NUNAVUT X0A 0H0
PHONE: (867) 979-1166
FAX: (867) 979-1169

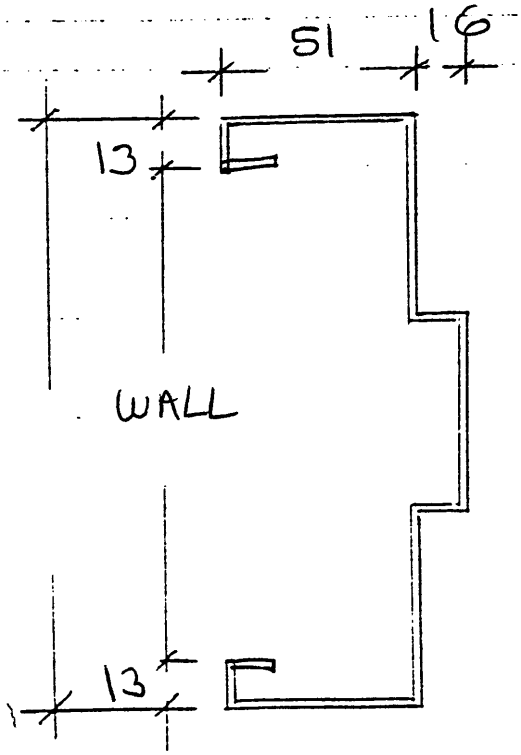

COUPE A

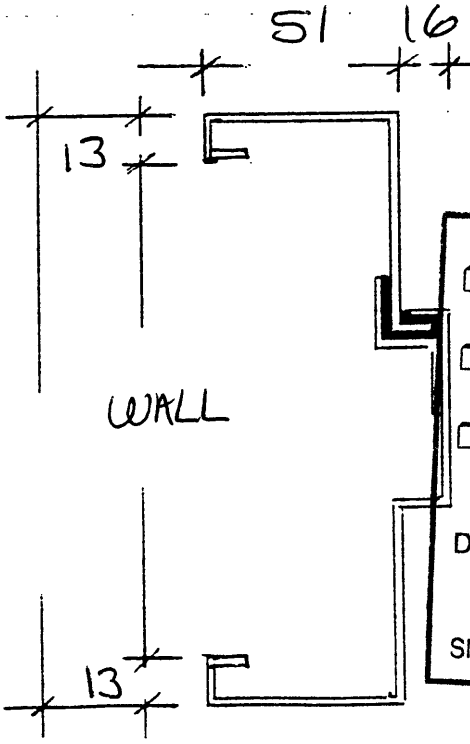

COUPE B

REVIEWED
REVIEWED AS NOTED
RESUBMIT
DATE 25/June/05
SIGNATURE

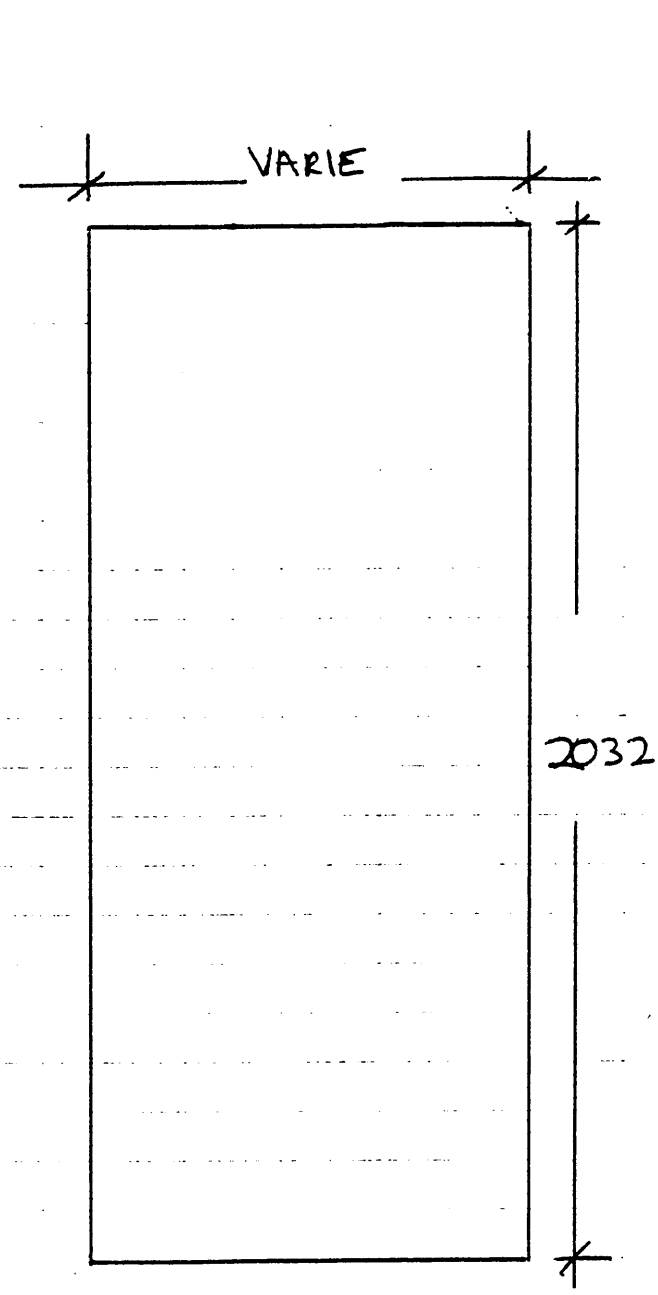

ELEV- A

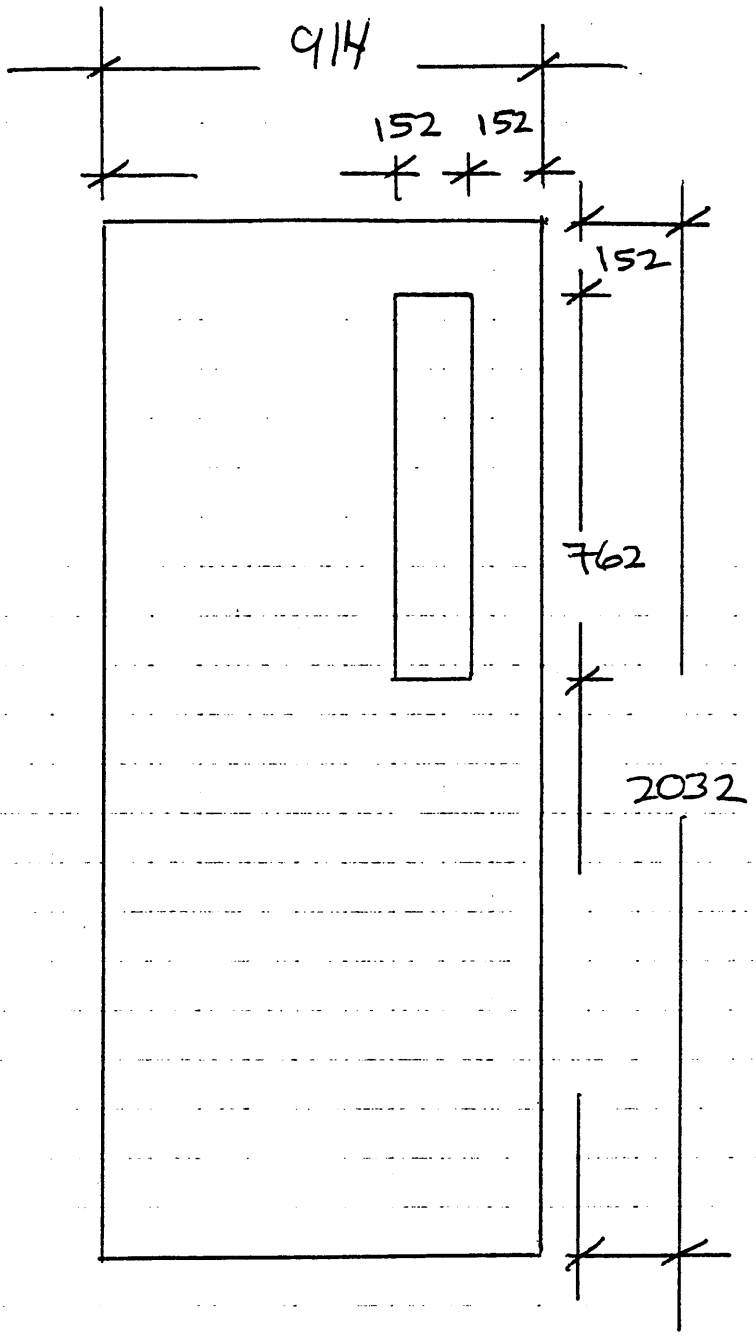

ELEV- B

☐ REVIEWED

☐ REVIEWED AS NOTED

☐ RESUBMIT

DATE 23 Jun/05

SIGNATURE

KUDLIK CONSTRUCTION LTD
P.O. BOX 727 1519 FEDERAL ROAD
IQUALUIT, NUNAVUT X0A 0H0
PHONE: (867) 979-1133
FAX: (867) 979-1169

KUDLIK CONSTRUCTION LTD
P.O. BOX 727, 1519 FEDERAL ROAD
IQUALUIT, NUNAVUT X0A 0H0
PHONE: (867) 979-1166
FAX: (867) 979-1169

FOR

COMMERCIAL - INDUSTRIAL

AND

INSTITUTIONAL APPLICATION

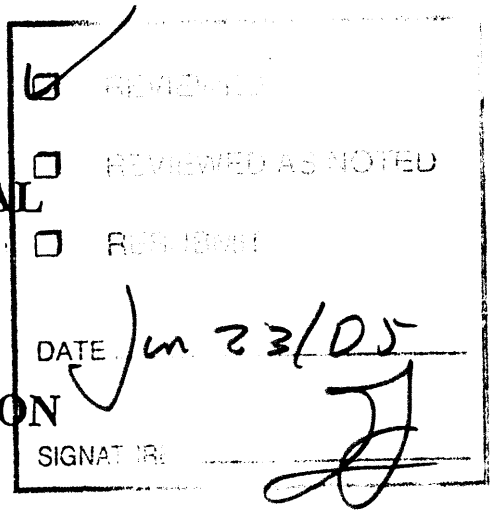

LES PORTES ET CADRES MÉTALEC INC

Manufacturer of steel doors and frames

2150, Léon-Harmel
Québec (Québec) G1N 4L2

Tél.: (418) 683-2431
Fax.: (418) 683-1878

MÉTALEC
PORTES & CADRES D'ACIER

KUDLIK CONSTRUCTION LTD
P.O. BOX 727, 1519 FEDERAL ROAD
IQUALUIT, NUNAVUT X0A 0H0
PHONE: (867) 979-1166
FAX: (867) 979-1169

WARRANTY AND LIMITATION OF LIABILITY

"PORTES ET CADRES METALEC INC.", warrants its products to be free from defects in materials and workmanship under normal conditions of use and maintenance, for a period of on year from the date of shipment. METALEC shall, at its option, repair or replace its product which in METALEC's opinion are found to be defective.

This warranty shall not apply to any products which, in the opinion of METALEC, have been modified, repaired, altered, or damaged in any way during transit or installation.

METALEC will not be responsible or liable for any or consequential damages, nor, without limiting the foregoing, for claims for labour, material, loss of profits, personal injuries, repairs, or transportation or other expenses incidental to default under this warranty.

All exterior doors must receive a "Top Cap" or else the warranty is void. No representative, distributor, agent or employee of METALEC has the authority to alter or extend the obligation of this warranty.

Claude Harton
Sales Manager

MÉTALEC

FRAME SPECIFICATIONS

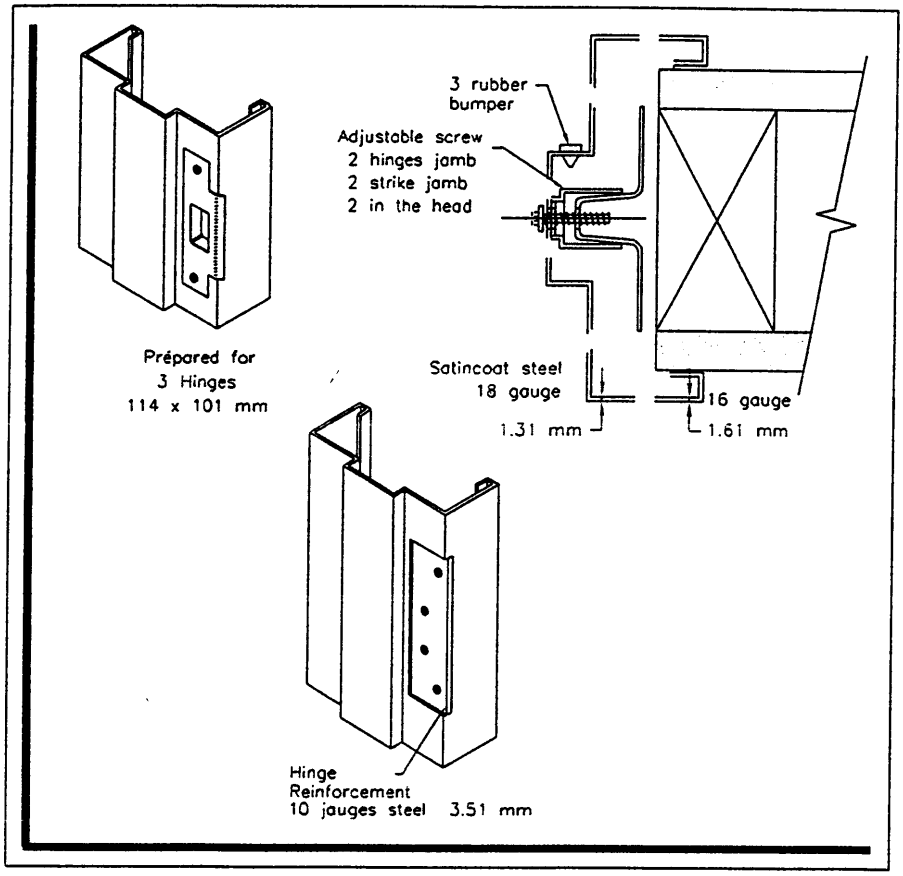

2150, LÉON-HARMEL, QUÉBEC (QC) CANADA G1N 4L2
TEL (418) 821-242 FAX (418) 683-1878

MÉTALEC
PORTES & CADRES D'ACIER

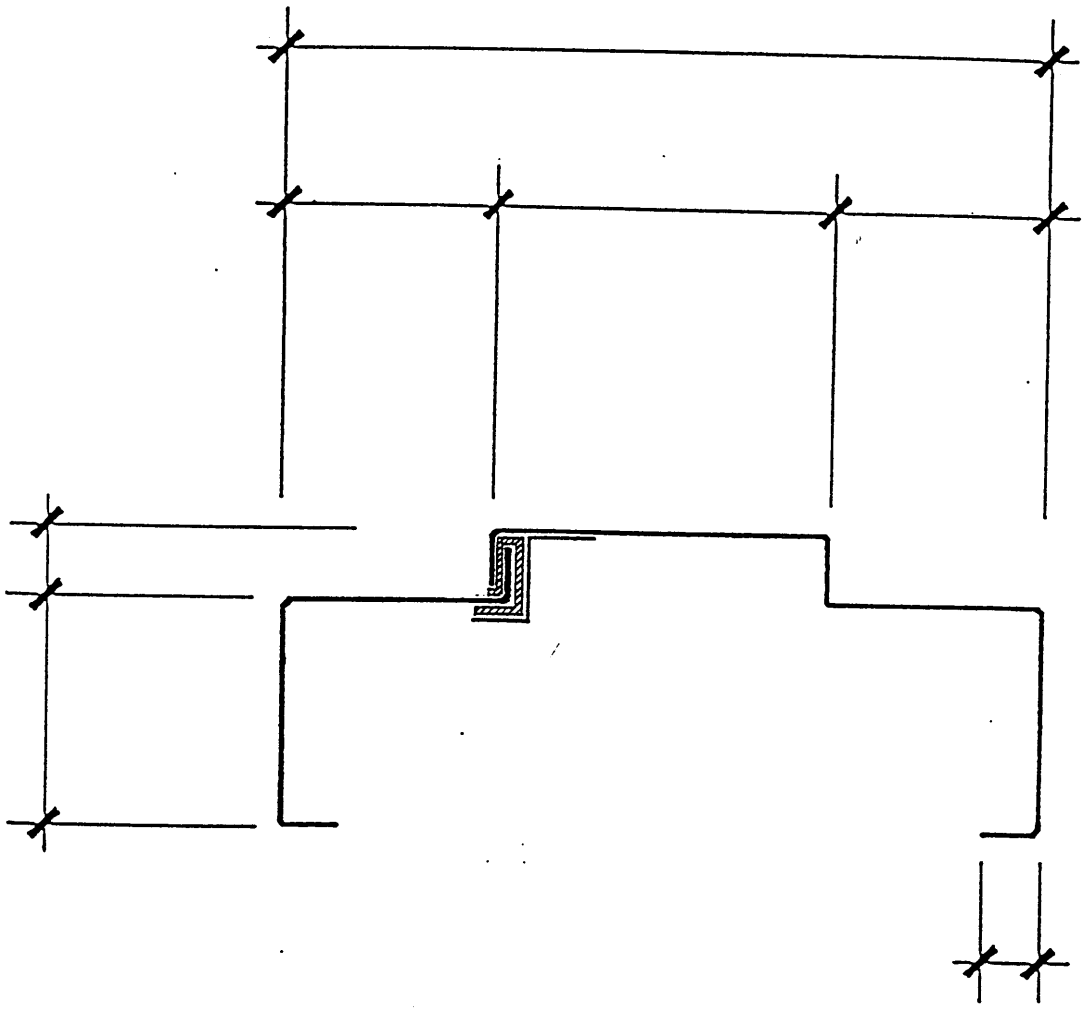

THERMALLY BROKEN FRAME

2150, LÉON-HARMEL, QUÉBEC (QC) CANADA G1N 4L2
TÉL.: (418) 683-2431 FAX: (418) 683-1878

SPECIFICATIONS FOR KNOCKDOWN OR WELDED FRAMES

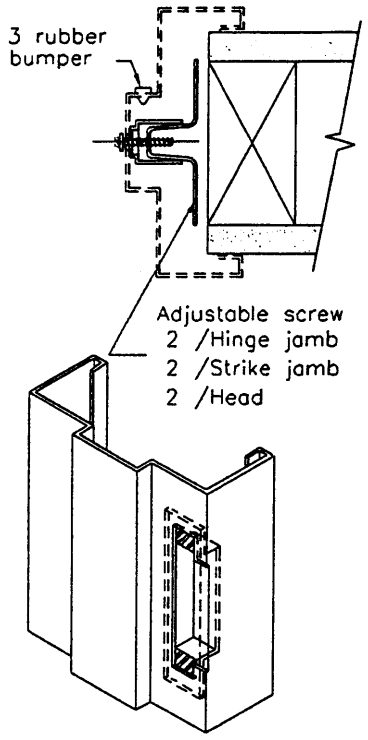

Strike preparation
A.N.S.I. A 115.1

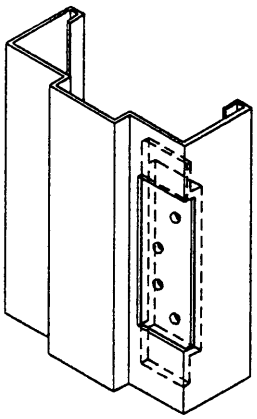

Prepared for 1-1/2 pair of hinges 114 mm height

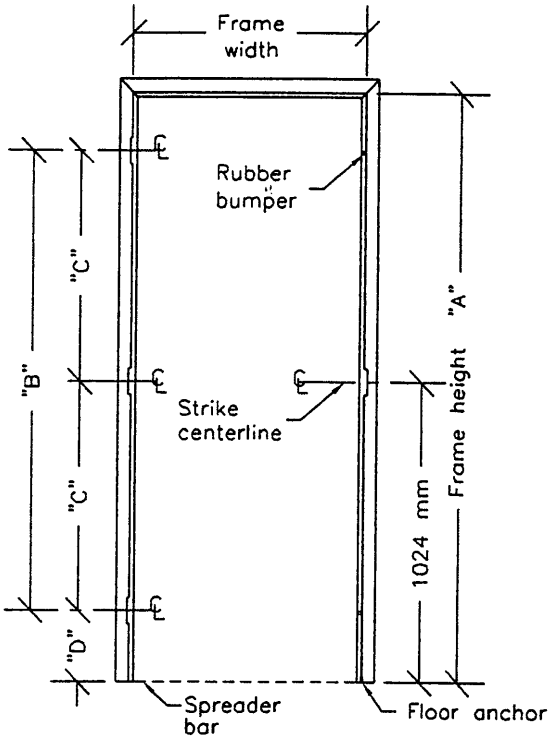

ELEVATION

HEIGHT (mm)	2032	2083	2134
DIMENSION "A"	2032	2083	2134
DIMENSION "B"	1520	1571	1622
DIMENSION "C"	760	785.5	811
DIMENSION "D"	264	264	264

ANCHOR TYPES

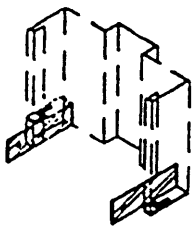

ATT 2

Strap anchor
(Kwik–fit)

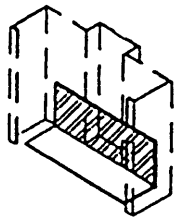

ATT 3

Welded in floor anchor

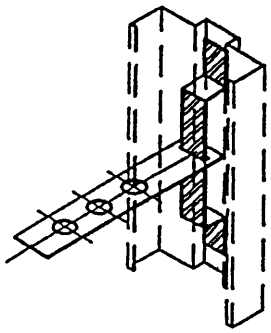

ATT 4

Adjustable strap anchor for masonry (ULC 3 hrs)

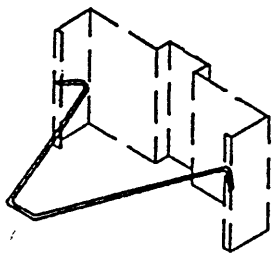

ATT 5

Adjustable wire anchor for masonry (can be use for ULC–1 1/2 hrs)

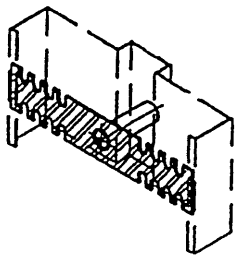

ATT 6

Existing masonry anchor

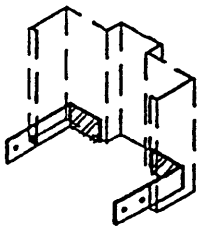

ATT 7

Strap anchor

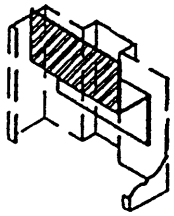

ATT 8

Stud anchor

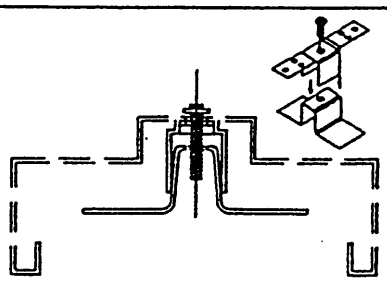

ATT 9

Adjustable tension anchor

MÉTALEC

DOOR SPECIFICATIONS

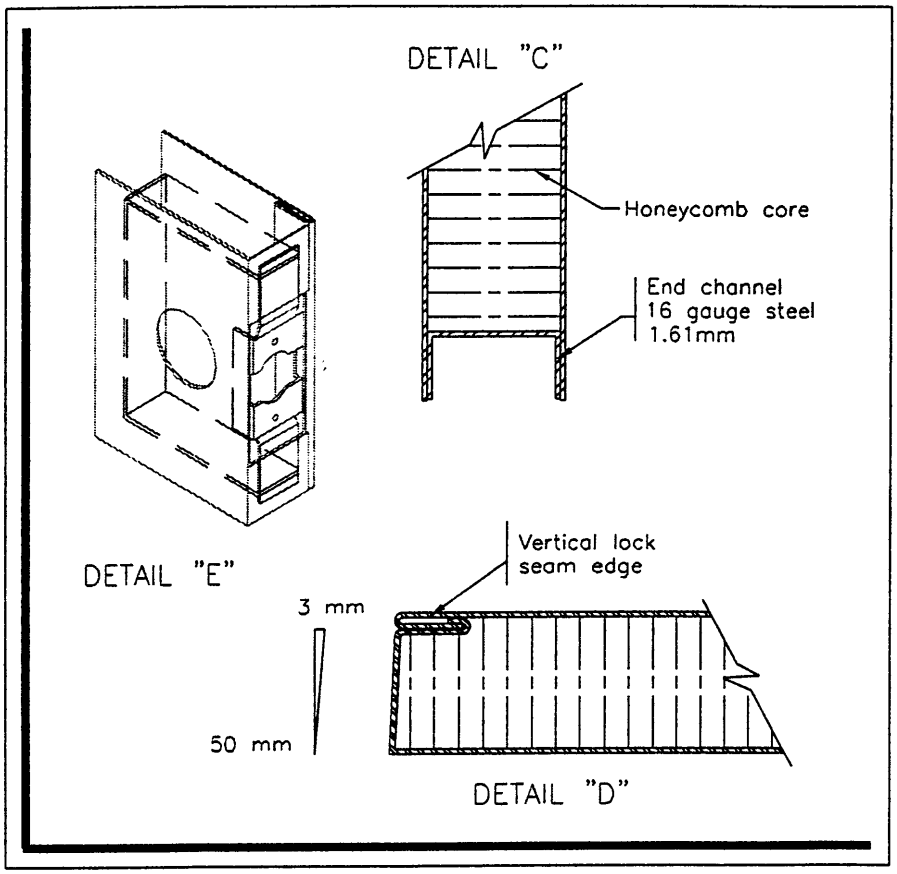

3150, LEO-PARIZEAU, LONGUEUIL (QUÉBEC) CANADA J4N 4L2
TEL.: (514) 651-2431 FAX: (514) 651-1878

SPECIFICATION FOR STEEL DOOR

(1 / 8)

STANDARD

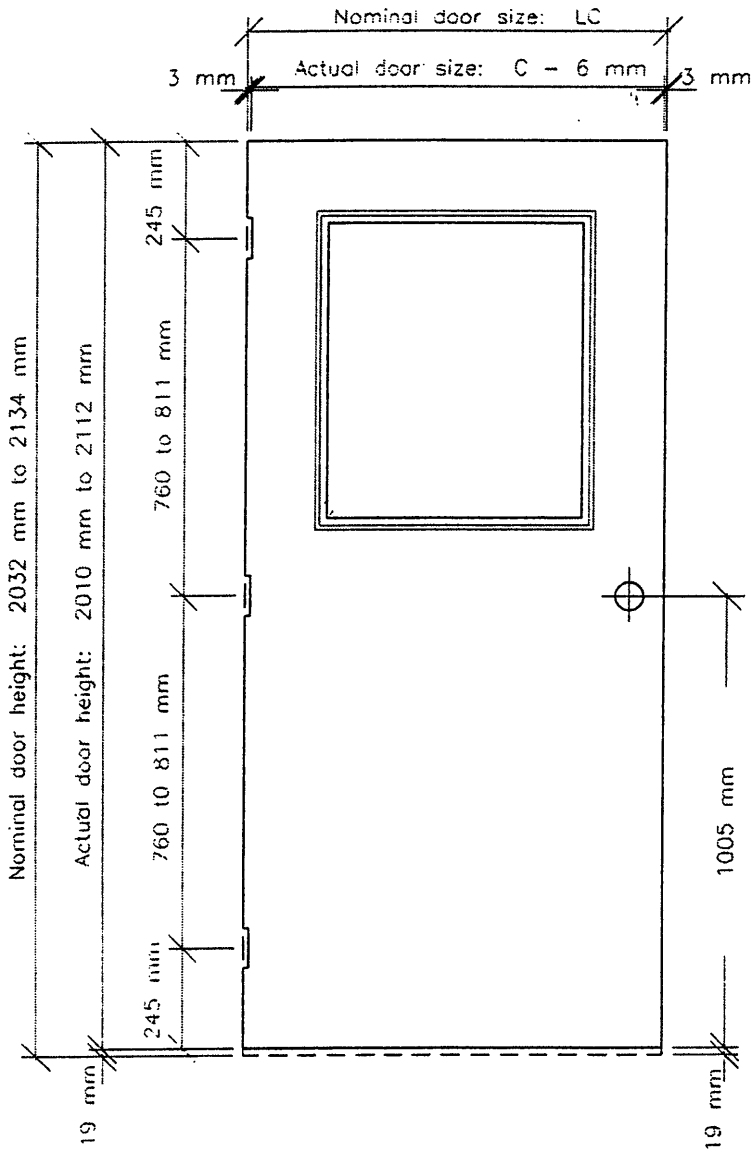

SPECIFICATIONS FOR STEEL DOOR TO USE WITH (2 / 8)

REVERSIBLE DOOR FRAMES (KWIKSET)

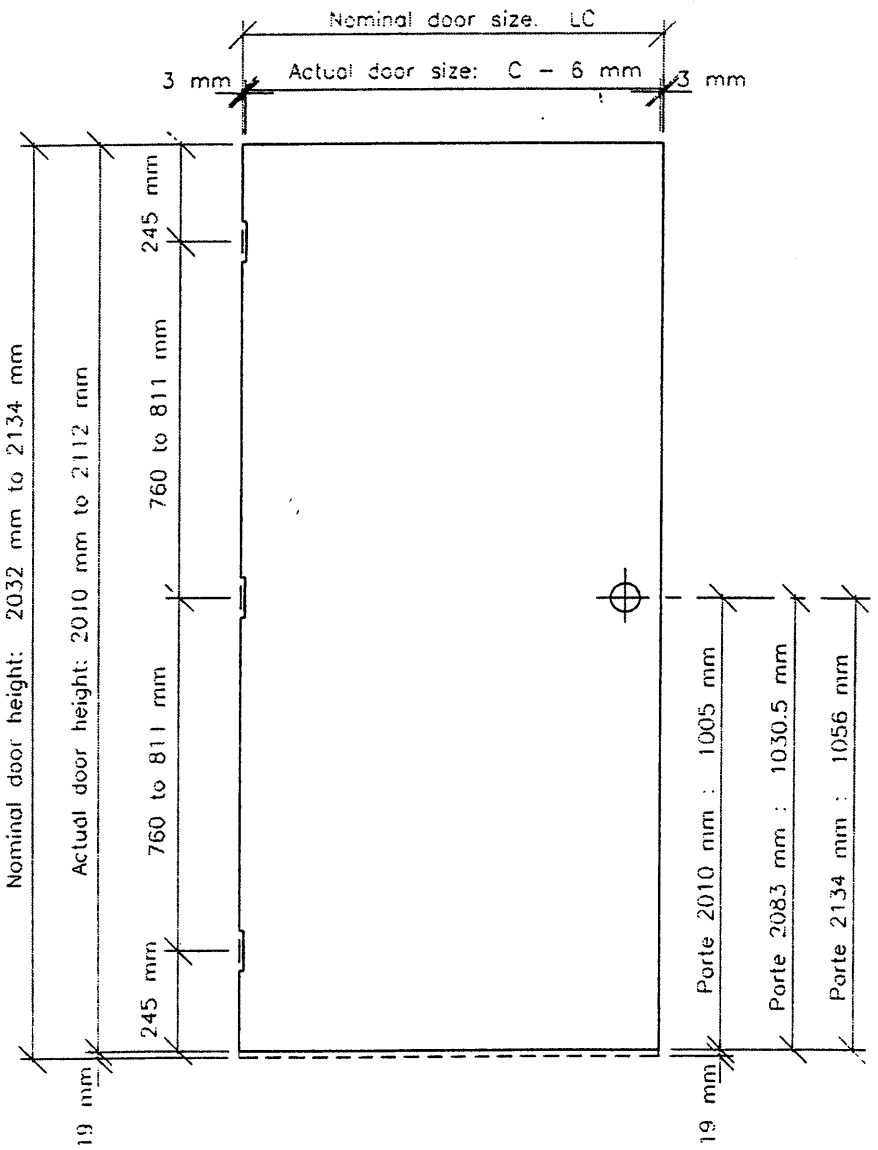

SPECIFICATONS FOR STEEL DOOR

(3 / 8)

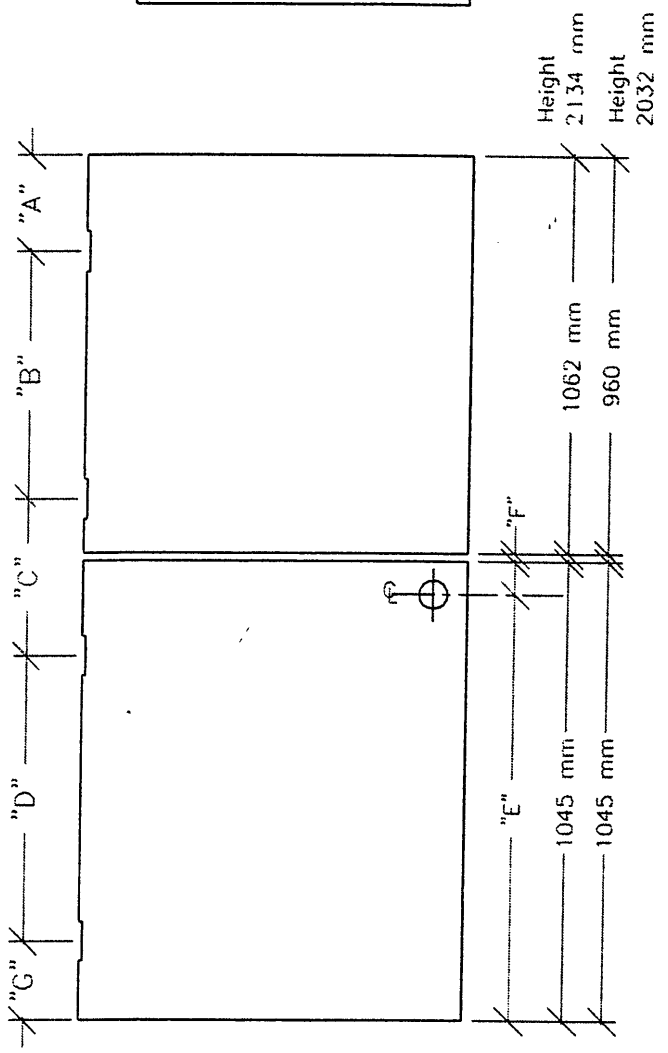

DOOR DIMENSIONS	"A"	"B"	"C"	"D"	"E"	"F"	"G"
2134 mm	245 mm	571 mm	495 mm	556 mm	921 mm	5 mm	245 mm
2083 mm	245 mm	520 mm	495 mm	556 mm	921 mm	5 mm	245 mm
2032 mm	245 mm	469 mm	495 mm	556 mm	921 mm	5 mm	245 mm

SPECIFICATIONS FOR STEEL DOOR

(4 / 8)

DOOR SPECIFICATION

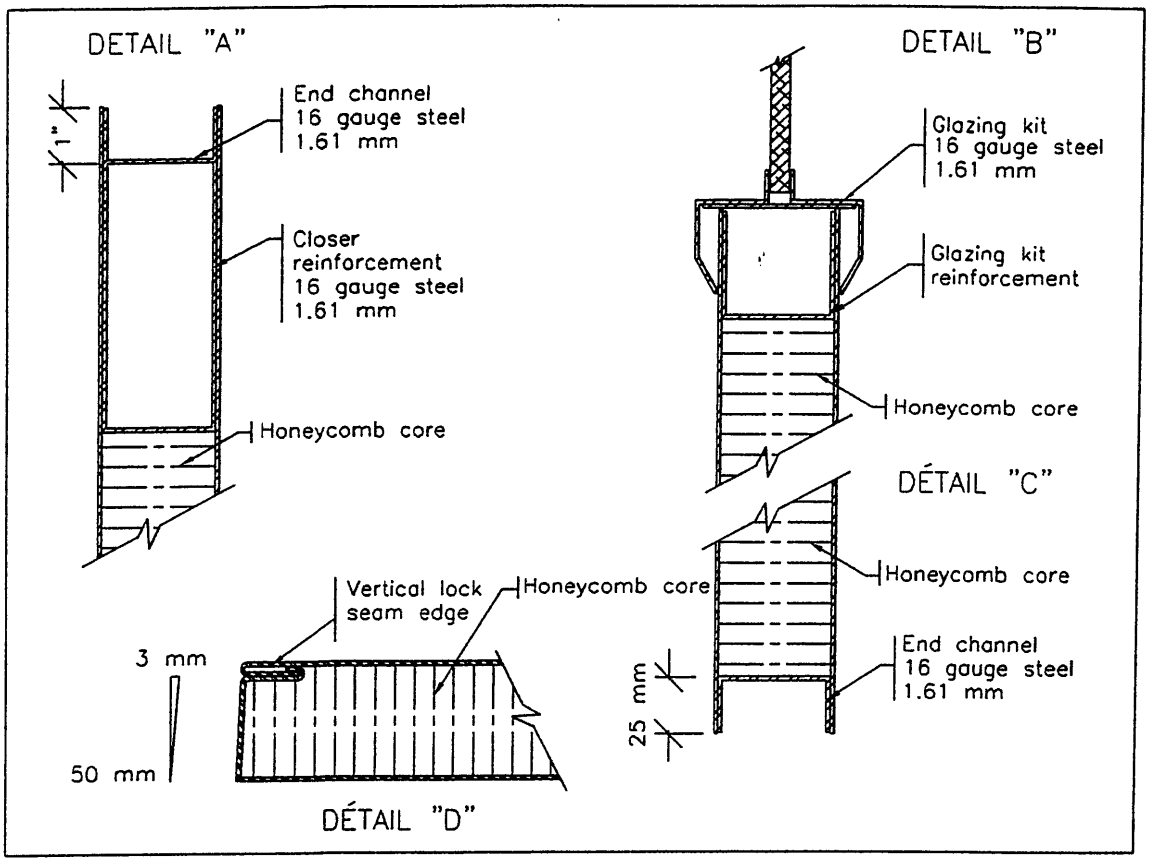

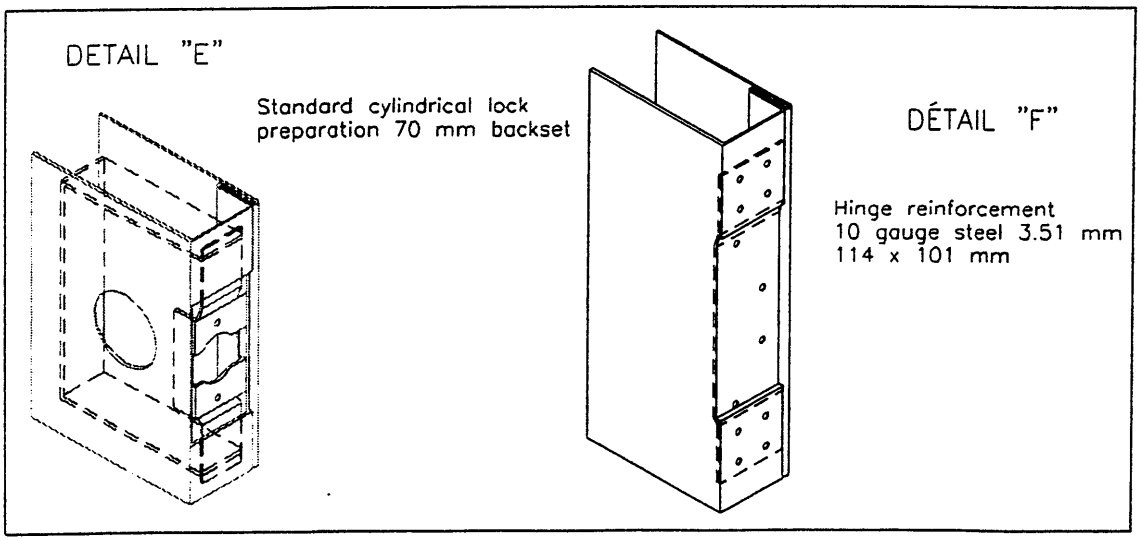

SPECIFICATIONS FOR STEEL DOOR

(5 / 8)

DOOR SPECIFICATION

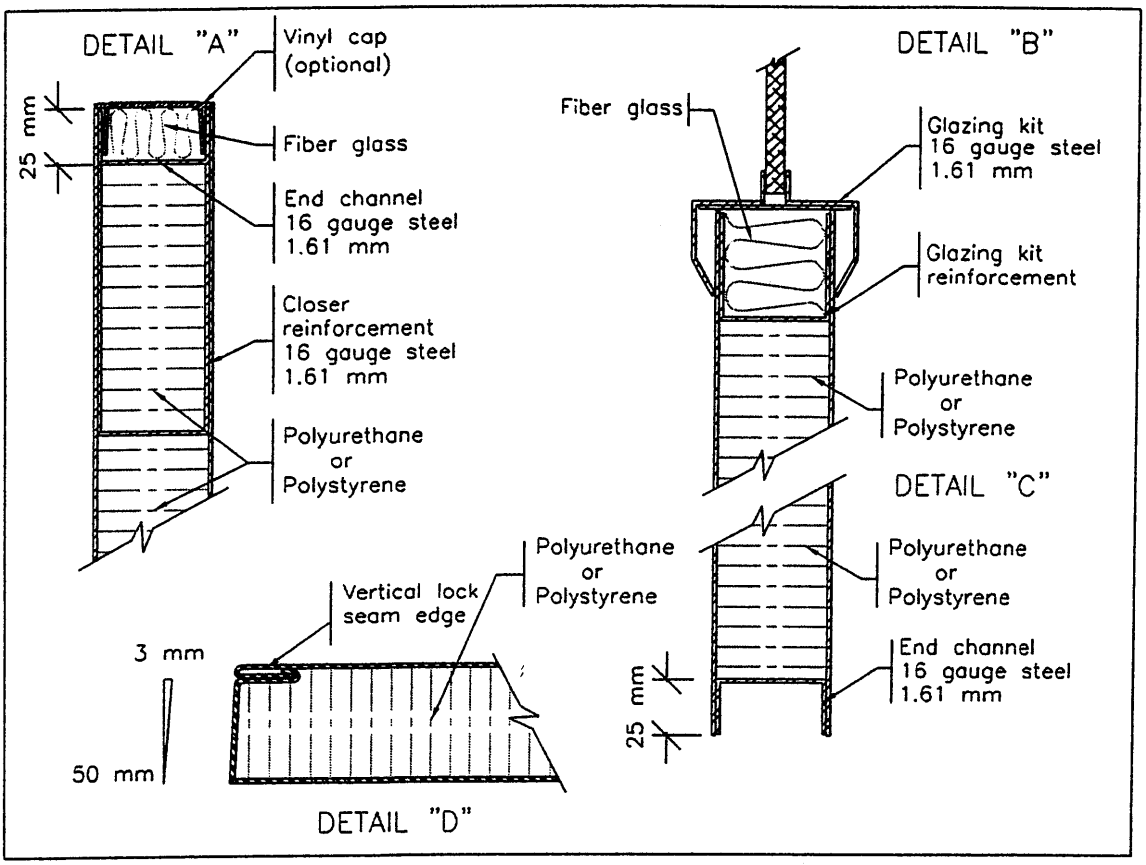

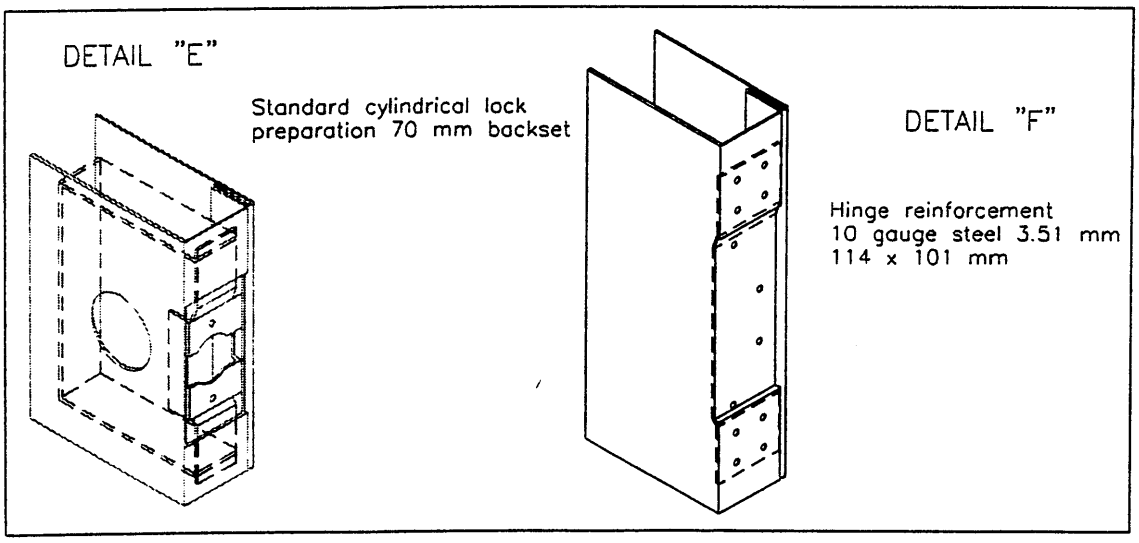

STEEL DOORS
(6 / 8)

MAXIMUM DIMENSIONS

- Maximum width : 1219 mm
- Maximum height : 2134 mm

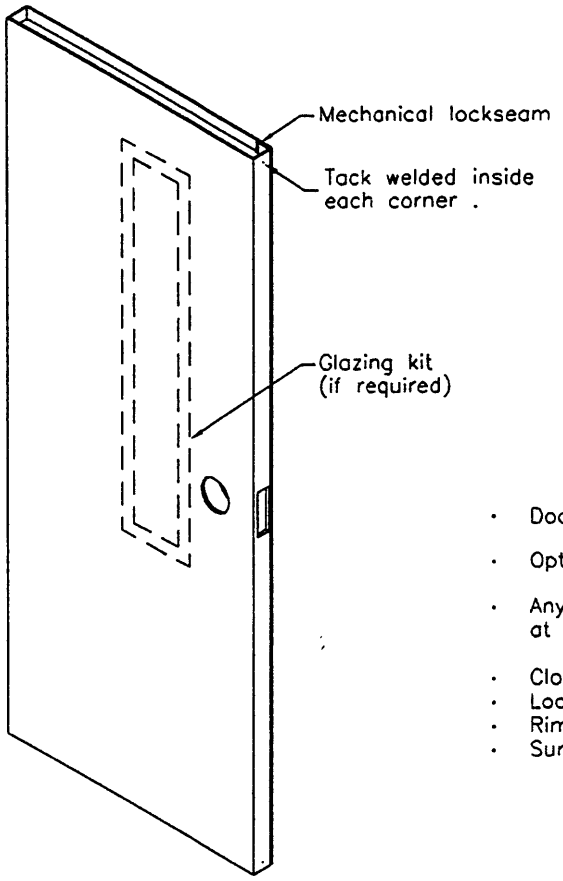

- Doors skins wipe coat galvanized steel
- Optional: Galvanised steel Z275 (G90)
- Any hardware preparation can be done at the factory .
- Closer reiforcement
- Lock reinforcement
- Rim panic reinforcement
- Surface bolt reinforcement

SPÉCIFICATIONS

- Door thickness 45 mm
- Doors are prepared for architectural hardware if specified .
- Door skins are made of wipe coat of galvanized steel (satin coat)
- Door shall be flush with visible edge seams . All tacks welded in grind smooth near from hardware preparation .
- Door core can be honeycomb , polyurethane or polystyrene board.
- Doors can be fire rated , if required .

DOOR SPECIFICATIONS

(7 / 8)

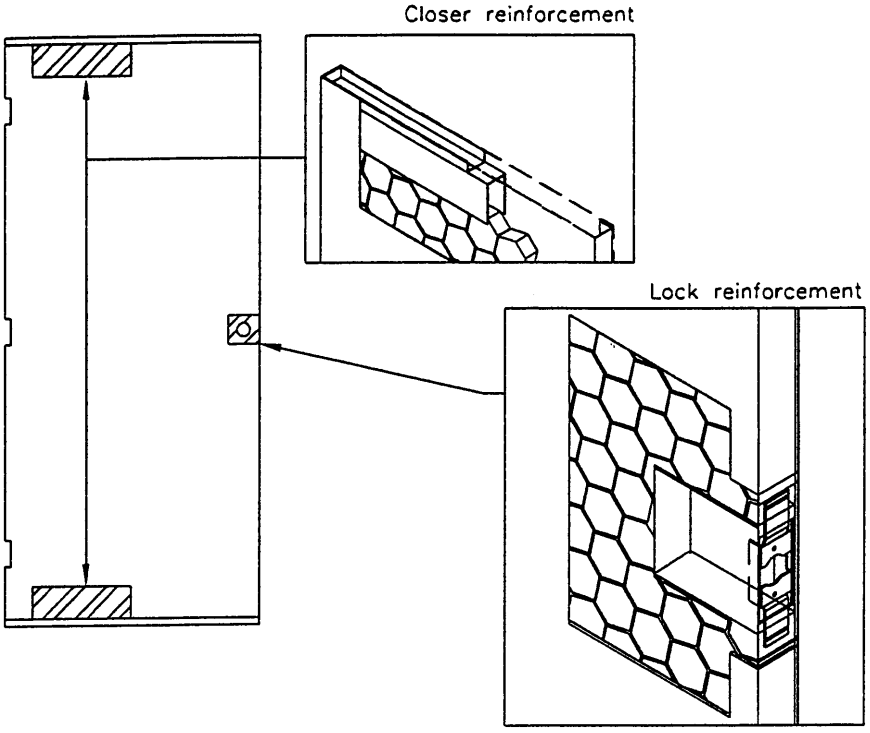

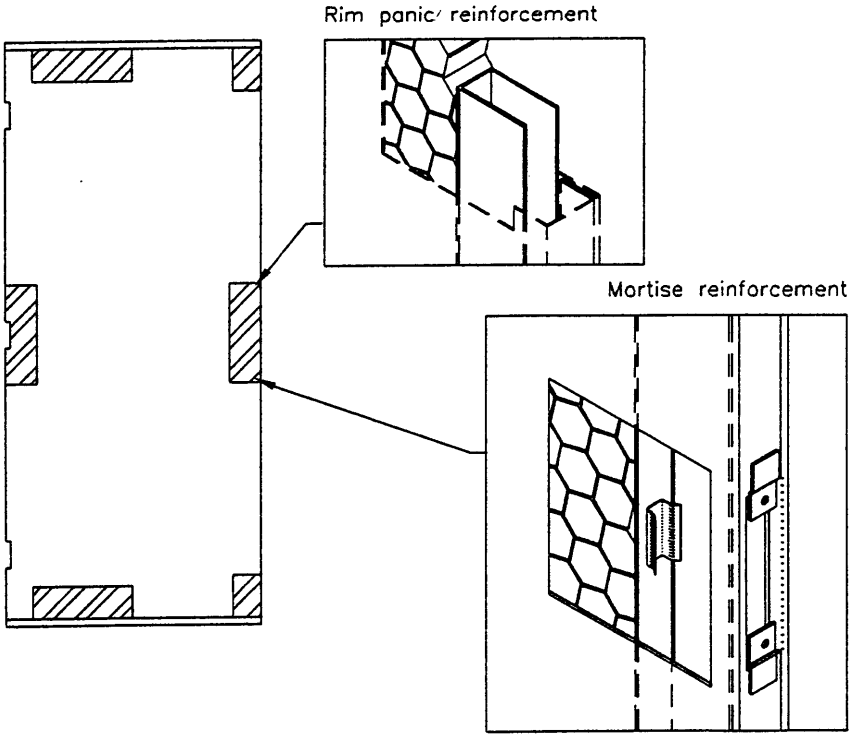

061346 - FBB168 4-1/2"x4" 26D Ball Bearing Hinge

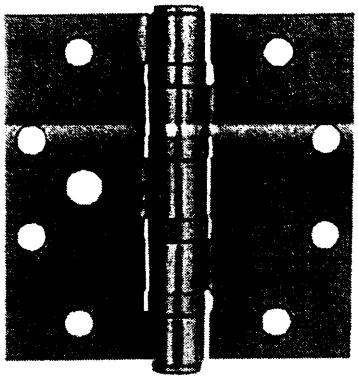

Click to Enlarge

Features and Benefits

- ANSI A8111
- Steel – polished and plated or phosphated and prime coated for painting
- For heavy doors or doors where high frequency is expected, such as entrance doors to office buildings, stores, public buildings and corridor entrance doors to offices
- All hinges have template screw hole location for use on either wood or hollow metal doors and frames
- Equipped with four permanently lubricated non-detachable ball bearings
- Equipped with easily seated, non-rising pins
- Pins in nonferrous hinges are stainless steel
- Steel hinges are highly polished and buffed, then plated to insure a fine durable finish or phosphated and prime coated for painting
- Heavy weight gauges increase available bearing surface area for maximum friction reduction
- Equipped with sleeve bearing for lateral support
- Available in wide throw, specification on request

--> **Hardware Templates**

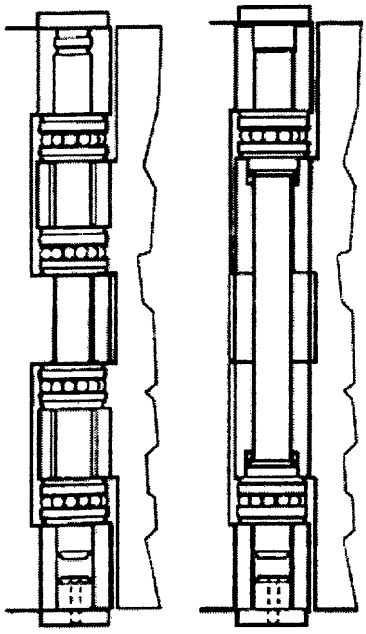

Product Details

Length	4-1/2",114.3mm
Width	4",101.6mm
Class	FBB168
Finish	26D
Finish Description	Satin Chromium Plated
Type	STOCK

Warranty

044783 - FBB199 4-1/2"x4-1/2" 32D Ball Bearing Hinge

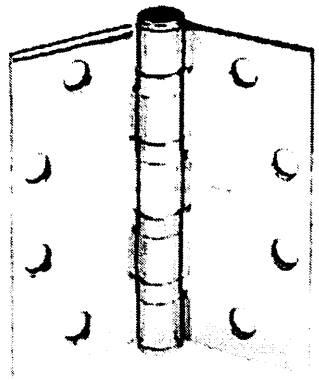

Click to Enlarge

Features and Benefits

- ANSI A2111
- ANSI A5111
- Brass or Bronze – highly polished and finished; Stainless Steel – highly polished; Stainless Steel – satin finish
- For heavy doors or doors where high frequency is expected, such as entrance doors to office buildings, stores, public buildings and corridor entrance doors to offices
- All hinges have template screw hole location for use on either wood or hollow metal doors and frames
- Equipped with four permanently lubricated non-detachable ball bearings
- Equipped with easily seated, non-rising pins
- Pins in nonferrous hinges are stainless steel
- Steel hinges are highly polished and buffed, then plated to insure a fine durable finish or phosphated and prime coated for painting
- Heavy weight gauges increase available bearing surface area for maximum friction reduction
- Equipped with sleeve bearing for lateral support

--> **Hardware Templates**

Product Details

Length	4-1/2",114.3mm
Width	4-1/2",114.3mm
Class	FBB199
Finish	32D
Finish Description	Satin Stainless Steel Metal
Metal Gauge	.180
Machine Screws Per Piece	8 - 12-24x1/2
Wood Screws Per Piece	8 - 12x1-1/4
Type	STOCK

Warranty

299 Strike

98 and 99 rim exit devices for all types of single and double doors with mullion, UL listed for Panic Exit Hardware. Devices are ANSI A156.3 – 2001 Grade 1. The 98 device has a smooth mechanism case and the 99 device has a grooved case. The rim device is non-handed except when the following device options are used: SD (Special Dogging), -2 (Double Cylinder) or SS (Signal Switch). See Opposite page for available outside trim and device functions. Covers stock hollow metal doors with 86 or 161 cutouts on single doors (may cover cutouts on pairs – consult template).

The 98/99 devices are available in the following finishes: US3, US4, US10, US26, US26D, US28, 313AN, 315AN and US32D for the 98 device only. See page 52 for component finishes and the inside cover for finish chips.

Specifications

Device Functions	Device ships EO/DT/NL. Field selectable. For TP,K,or L remove NL drive screw from device	
Device Lengths	3' 2'4" to 3' (711mm to 914 mm) Door Size 4' 2'10" to 4' (864 mm to 1219 mm) Door Size	
Strikes	299 – Dull Black Optional Strikes – see page 39	
Dogging Feature	Hex key dogging standard	
Dogging Options	CD Cylinder Dogging SD Special Center Case Dogging LD Less Dogging	see page 48 see page 48 see page 48
Electric Options	LX Latchbolt Monitor Switch RX Pushpad Monitor Switch RX2 Double Pushpad Monitor Switch E Electric Locking & Unlocking EL Electric Latch Retraction SS Signal Switch CX Chexit Delayed Exit ALK Alarm Exit Kit	see page 42 see page 42 see page 42 see page 44 see page 43 see page 43 see page 45 see page 42
Miscellaneous Options	PN Pneumatic Latch Retraction -2 Double Cylinder GBK Glass Bead Kit	see page 48 see page 48 see page 49
Fasteners & Sex Bolts (SNB)	Includes 1 ¾" (19mm) – 2 ¼" (57mm) Wood & Metal Doors Optional SNB available for device, see next page for quantities	
Latch Bolt	Deadlocking, ¾" (19mm) throw	
Device Centerline from Finished Floor	39 13/16" (1011 mm) 39 11/16" (1008 mm) with Mullion	
Center Case Dimensions	8" x 2 ¾" x 2 ⅜" (203mm x 70mm x 60mm)	
Mechanism Case Dimensions	2 ¼" x 2 ¼" (57mm x 57mm)	
Projection	Pushbar Neutral – 3 13/16" (97 mm) Pushbar Depressed – 3 1/16" (78 mm)	

See page 53 for How to Order specification

© 2004 Ingersoll-Rand. May be copied for use with specification submittal.

VON DUPRIN® 98/99™ Rim Exit Device Standard Trim

	Exit only	**Dummy Trim** Pull when Dogged	**Night Latch** Key Retracts Latchbolt	**Night Latch** Key Retracts Latchbolt Optional Pull Required
Product Description	98EO 99EO	98DT 99DT	98NL 99NL	98NL-OP 99NL-OP
Trim Description	—	990DT	990NL-R/V	110NL-MD 110NL-WD
Escutcheon Plate Size	—	3" x 14³⁄₁₆" x ³⁄₃₂" *(76x360x2mm)*	3" x 14³⁄₁₆" x ³⁄₃₂" *(76x360x2mm)*	—
Pull Center to Center	—	5½" *(140mm)*	5½" *(140mm)*	—
Projection	—	2" *(51mm)*	2" *(51mm)*	—
ANSI Function	01	02	03	03
Cylinder Type	—	—	Rim	Rim
Optional Trim (See pages 32 – 34)	x990EO x992EO x994EO x996EO	x991K-DT x992L-DT x994L-DT x996L-DT x696DT x697DT	x991K-NL x992L-NL x994L-NL x996L-NL x696NL x697NL	
Optional #425 Sex Bolt Quantity for Device	6	2	2	6

	Lever Key Locks & Unlocks	**Lever - Night Latch** Key Retracts Latchbolt	**Lever - Blank Escutcheon** Always operable (No Cylinder)	**Lever Dummy Trim** Pull when Dogged
Product Description	98L 99L	98L-NL 99L-NL	98L-BE 99L-BE	98L-DT 99L-DT
Trim Description	996L-R/V	996L-NL-R/V	996L-BE-R/V	996L-DT-R/V
Escutcheon Plate Size	2¾" x 10¾" x ²⁷⁄₃₂" *(70x273x21mm)*	2¾" x 10¾" x ²⁷⁄₃₂" *(70x273x21mm)*	2¾" x 10¾" x ²⁷⁄₃₂" *(70x273x21mm)*	2¾" x 10¾" x ²⁷⁄₃₂" *(70x273x21mm)*
Pull Center to Center	—	—	—	—
Projection	2⅞" *(73mm)*	2⅞" *(73mm)*	2⅞" *(73mm)*	2⅞" *(73mm)*
ANSI Function	08	09	—	02
Cylinder Type	Rim	Rim	—	—
Optional Trim (See pages 32 – 34)	x992L x994L	x992L-NL x994L-NL	x992L-BE x994L-BE	x992L-DT x994L-DT
Optional #425 Sex Bolt Quantity for Device	2	2	2	2

For optional trims and functions see pages 32-34

Knob and Thumbpiece Trim

	Knob Key Locks & Unlocks	**Knob - Night Latch** Key Retracts Latchbolt	**Knob - Blank Escutcheon** Alwaya Operable (No Cylinder)	**Knob - Dummy Trim** Pull when Dogged	**Thumbpiece** Key Locks & Unlocks	**Thumbpiece Blank Escutcheon** Always Operable (No Cylinder)
Trim Description	991K	991K-NL	991K-BE	991K-DT	990TP	990TP-BE
Escutcheon Plate Size	2¾" x 10¾" x 27/32" *(70x273x21mm)*	2¾" x 10¾" x 27/32" *(70x273x21mm)*	2¾" x 10¾" x 27/32" *(70x273x21mm)*	2¾" x 10¾" x 27/32" *(70x273x21mm)*	2¾" x 10¾" x 27/32" *(70x273x21mm)*	2¾" x 10¾" x 27/32" *(70x273x21mm)*
Pull Center to Center	—	—	—	—	5½" *(140mm)*	5½" *(140mm)*
Projection	3¼" *(83mm)*	3¼" *(83mm)*	3¼" *(83mm)*	3¼" *(83mm)*	2" *(51mm)*	2" *(51mm)*
ANSI Function	08	09	—	02	05	05
Cylinder Type						
Rim or Vertical Rod Device	Rim	Rim	—	—	Rim	—
Mortise Lock Device	1¼" Mortise	1¼" Mortise			1¼" Mortise	—
#425 SNB optional-HMD Req. WD w/o SLM Pkg.	2	2	2	2	2	2
#825 SNB Req. WD w/o SLM Pkg. F Rim device ONLY	2	2	2	2	2	2
#425 SNB Req. w/ 499F	2	2	2	2	2	2

Lever Design Options

#01

#02

#03

#05

#06
Standard

#07

#12
Handed

#16

#17

#18

© 2004 Ingersoll-Rand. May be copied for use with specification submittal.

Dummy Pushpad

The 330 dummy pushpad is designed as a companion unit for all 99 devices. The 350 dummy pushpad is a companion unit for all 98 devices. The pushpad is rigid or nonfunctioning. A push/pull operation can be accomplished by using 990DT, 996DT trim or any Ives Pull.

The 330/350 can be equipped with a functional pushpad and will accommodate an RX switch. Specify RX-330. May also be equipped with the RX2, double RX switch. Specify RX2-330

To order, specify:

1. 330 or 350.
2. Size 3' or 4' *(914mm or 1219mm)*
3. Finish, US3, US4, US10, US26, US26D, US28, 313AN, 315AN, 350 Only US32D.

Cylinders

Cylinders are not furnished with device or trim and must be specified when ordering. Refer to trim pages for cylinder type.

Mortise - 3215 (Schlage B502-191 cam)

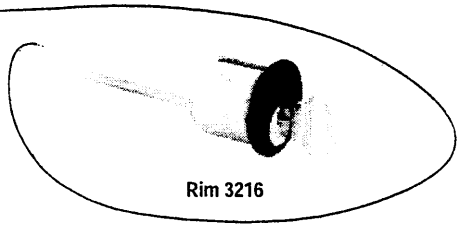

Rim 3216

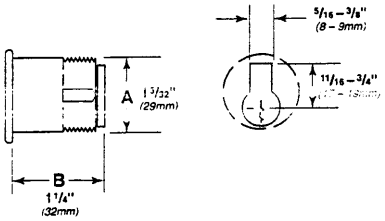

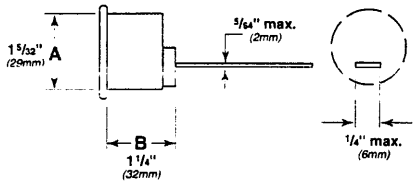

Dogged (Inverted) Cam

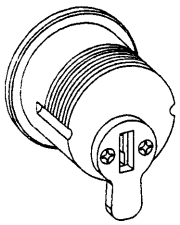

For Cylinder Dogging

Undogged Cam
(Standard Operations)

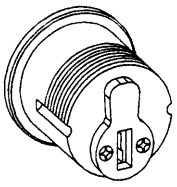

For Standard Trim Functions

Door Handing

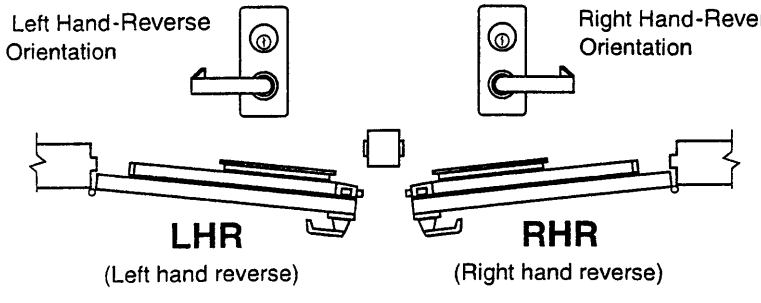

© 2004 Ingersoll-Rand. May be copied for use with specification submittal.

Extra Heavy Duty Commercial

D-Series locks are for commercial, institutional and industrial use, such as schools, hospitals and factories, where a long life of dependable operation must be combined with a high degree of resistance to physical abuse.

Popular functions of all lever designs are also available in Vandlgard®, where levers are free-wheeling in the locked position to resist more forceful attacks.

Performance Features

Tested to exceed 3,000,000 cycles, greatly exceeding the 800,000 cycle ANSI Grade 1 requirement.

Exceeds ANSI A156.2 Series 4000 Grade 1 locked lever torque requirements.

Vandlgard® functions have free-wheeling levers to resist force when locked.

Independent heavy duty spring cages for effective lever support.

Thru-bolted mechanism for positive interlock to door.

Concealed mounting screws.

Steel Latchbolt.

INDEX

Cylinders	8
Designs & Finishes	4
Door Preparation	3
Door Handing	12
Exploded View	2
Functions	6-7
How to Order	13
Interchangeable Cores	8-9
Latches	10
Performance Features	2
Specifications	3
Strikes	11
Vandlgard® Features	5
Wiring for Electrified Locks	12

Exploded View

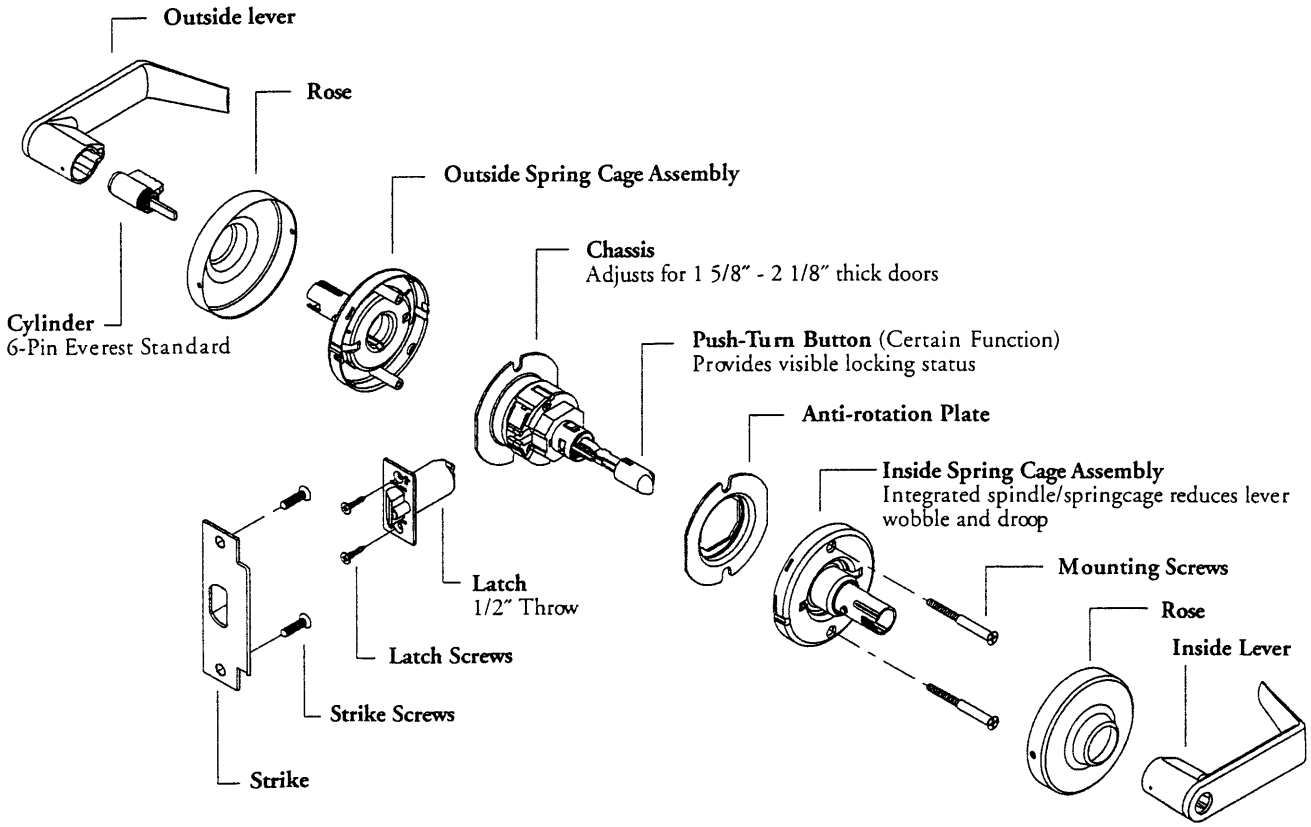

On our cover, the D-Series OMEGA in Satin Nickel.

Specifications

Handing:
All D-Series lever locksets are non-handed.

Door Thickness:
1⅜" to 2⅛" (41mm–54mm) standard including Vandlgard® functions.
See accessories (Page 12) for spacers required for 1⅜" doors.

Backset:
2¾" (70 mm) standard. 2⅜", 3¾" and 5" (60 mm, 95 mm, 127 mm) optional.

Faceplate:
Brass, bronze or stainless steel. 1⅛" x 2¼" (29 mm x 57mm) square corner, beveled.

Lock Chassis:
Zinc plated for corrosion resistance.

Latch Bolt:
Steel, ½" (12mm) throw, deadlocking on keyed and exterior functions. ¾" (19 mm) throw anti-friction latch available for pairs of fire doors.

Exposed Trim:
Levers: Pressure cast zinc, plated to match finish symbols.
Roses: Solid brass.

Strike:
ANSI curved lip strike 1¼" x 4⅞" x 1³⁄₁₆" lip to center standard. Optional strikes, lip lengths and ANSI strike box available. See page 11.

Cylinder & Keys:
6-pin Everest C123 keyway standard with two patented nickel silver keys per lock.

Keying Options:
Interchangeable core and Primus® high security cylinders. Master keying, grand master keying and construction keying.

Warranty:
Seven-year limited for all functions including Vandlgard®.

Door Preparation

Lever Designs

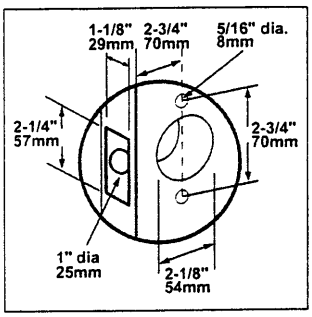

Certifications

ANSI
Meets or exceeds A156.2 Series 4000, Grade 1 strength and operational requirements. Meets A117.1 Accessibility Code.

Federal
Meets FF-H-106C Series 161.

California State Reference Code
(Formerly Title 19, California State Fire Marshal Standard)
All levers with returns comply; levers return to within ½" of door face.

UL / cUL:
All locks listed for A label single doors, 4′ x 8′.
Letter F and UL symbol on latch front indicate listing.
Electrified functions are UL19X Listed for single point locking applications.
UL437 Listed locking cylinder optional: specify Primus 20-500 Series cylinder.

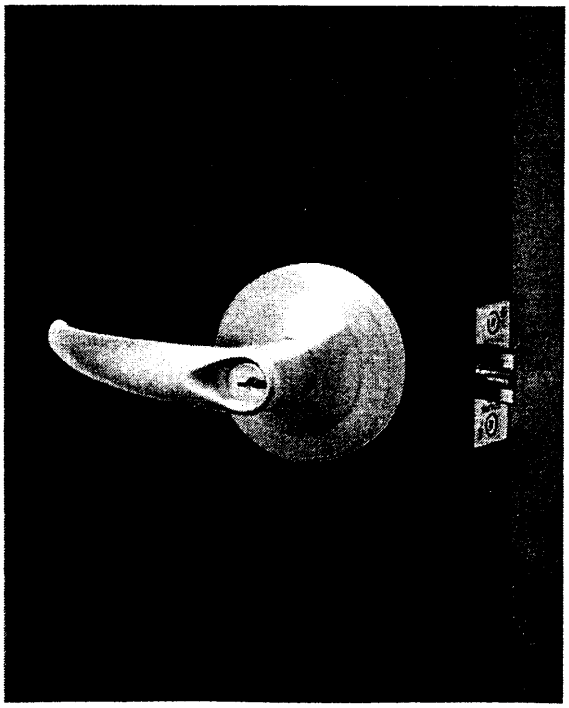

Lever Designs & Finishes

ATHENS

Symbol: ATH
Material: Pressure cast zinc lever; wrought brass rose
Finishes:
605, 606, 612, 613, 619, 625, 626

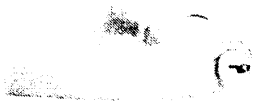

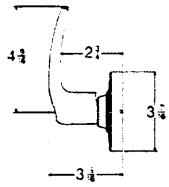

606

RHODES

Symbol: RHO (06)*
Material: Pressure cast zinc lever; wrought brass rose
Finishes:
605, 606, 612, 613, 619, 625, 626

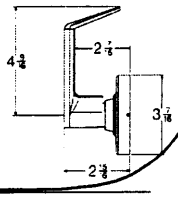

612

Lever Designs & Finishes

SPARTA

Symbol: SPA (17)*
Material: Pressure cast zinc lever; wrought brass rose
Finishes:
605, 606, 612, 613, 619, 625, 626

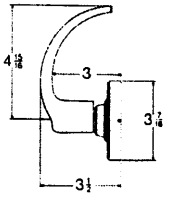

626

OMEGA

Symbol: OME*
Material: Pressure cast zinc lever; wrought brass rose
Finishes:
605, 606, 612, 613, 619, 625, 626

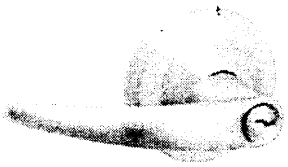

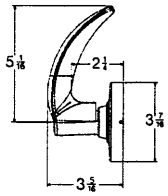

619

* Trim available with CM5200 Series Locksets

605
Bright Brass

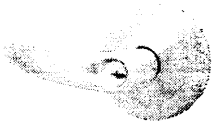

606
Satin Brass

612
Satin Bronze

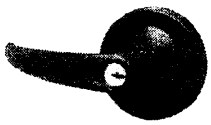

613
Oil Rubbed Bronze

619
Satin Nickel

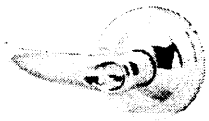

625
Bright Chromium Plated

626
Satin Chromium Plated

Keyed functions available with interchangeable core options. Levers are available for full size and small format interchangeable cores.

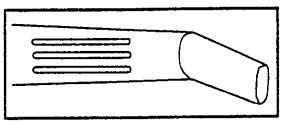

TACTILE WARNING (KNURLING)

Change symbol designation as follows:
8AT for Athens*
8RO for Rhodes
8SP for Sparta

Only outside lever is knurled unless otherwise specified.

Not available with Omega trim

Finishes
605 Bright Brass
606 Satin Brass*
612 Satin Bronze
613 Oil Rubbed Bronze
619 Satin Nickel
625 Bright Chromium Plated
626 Satin Chromium Plated

Functions

Non-Keyed Locks

SCHLAGE ANSI

ND10S F75

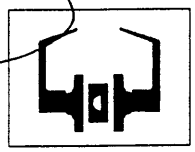

Passage Latch
Both knobs always unlocked.

ND12D F89

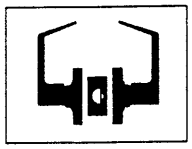

Exit Lock
Outside lever always fixed. Inside lever always unlocked.

ND12DEL

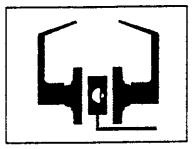

Electrically Locked (Fail Safe)
Outside lever continuously locked electrically. Unlocked by switch or power failure. Auxiliary latch deadlocks latchbolt when door is closed. Inside lever always free for immediate exit.

ND12DEU

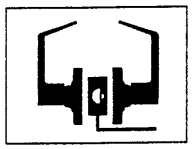

Electrically Unlocked (Fail Secure)
Outside lever continuously locked until unlocked by electric current. Auxiliary latch deadlocks latchbolt when door is closed. Inside lever always free for immediate exit.

ND25D

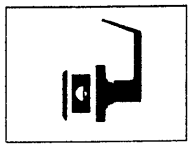

Exit Lock
Blank plate outside. Inside lever always unlocked.

ND40S F76

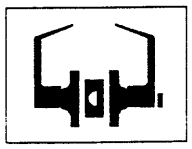

Bath/Bedroom Privacy Lock
Push-button locking. Can be opened from outside with small screwdriver. Turning inside lever or closing door releases button.

ND44S

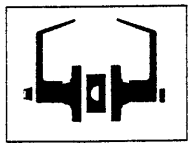

Hospital Privacy Lock
Push-button locking. Unlocked from outside by turning emergency turn-button. Turning inside lever or closing door releases button.

ND170

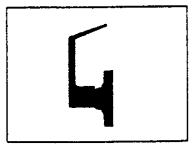

Single Dummy Trim
Dummy trim for one side of door. Used for door pull or as matching inactive trim.

Keyed Locks

SCHLAGE ANSI

ND50PD F82

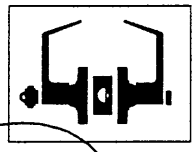

Entrance/Office Lock*
Push-button locking. Push-button locks outside lever until unlocked with key or by turning inside lever.

ND53PD F109

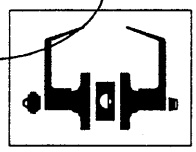

Entrance Lock*
Turn/push-button locking; pushing and turning button locks outside lever, requiring use of key until button is manually unlocked. Push-button locking; pushing button locks outside lever until unlocked by key or by turning inside lever.

ND60PD F88

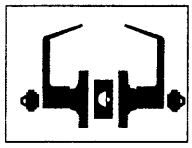

Vestibule/Classroom Security Lock*
Latch retracted by key from outside when outside lever is locked by key in inside lever. Inside lever is always unlocked.

ND66PD F91

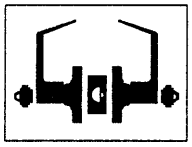

Store Lock*†
Key in either lever locks or unlocks both levers.

ND70PD F84

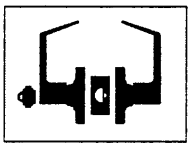

Classroom Lock*
Outside lever locked and unlocked by key. Inside lever always unlocked.

ND73PD F90

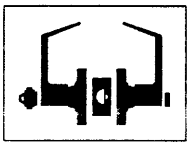

Corridor Lock*
Outside lever locked by key outside or push-button inside. Push-button released by rotating inside lever or closing door. When outside lever is locked by key, key must be used to unlock it. Inside lever is always unlocked.

* *Available functions for small format interchangeable core.*

† *Caution: Double cylinder locks on residences and any door in any structure which is used for egress are a life safety hazard in times of emergency and their use is not recommended. Installation should be in accordance with existing codes only.*

Functions

Keyed Locks

SCHLAGE ANSI

ND80PD F86

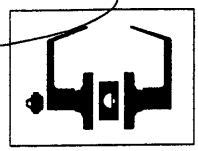

Storeroom Lock*
Outside lever fixed. Entrance by key only. Inside lever always unlocked.

ND80PDEL

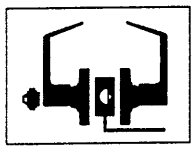

Electrically Locked (Fail Safe)*
Outside lever continuously locked electrically. Unlocked by key outside or by switch or power failure. Auxiliary latch deadlocks latchbolt when door is closed. Inside lever always free for immediate exit.

ND80PDEU

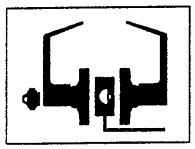

Electrically Unlocked (Fail Secure)*
Outside lever continuously locked until unlocked by key or electric current. Auxiliary latch deadlocks latchbolt when door is closed. Inside lever always free for immediate exit.

ND82PD F87

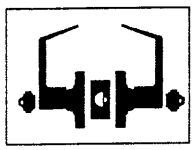

Institution Lock*†
Both levers fixed. Entrance by key in either lever.

Vandlgard Functions

SCHLAGE ANSI

ND91PD F82

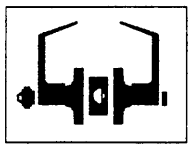

Entrance/Office Lock*
Push-button locking. Push-button disengages outside lever until unlocked with key or by turning inside lever. Vandlgard is designed to disengage outside spindle from latch when in locked condition.

ND92PD F109

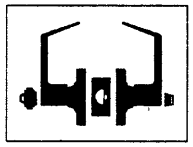

Entrance Lock*
Turn/push-button locking; pushing and turning button disengages outside lever, requiring use of key until button is manually unlocked. Push-button locking; pushing button disengages outside lever until unlocked by key or by turning inside lever. Vandlgard is designed to disengage outside spindle from latch when in locked condition.

ND93PD F88

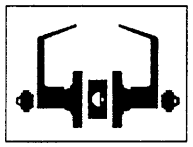

Classroom Security Lock*
Latch retracted by key from outside when outside lever is disengaged by key in inside lever. Inside lever is always unlocked. Vandlgard is designed to disengage outside spindle from latch when in locked condition.

ND94PD F84

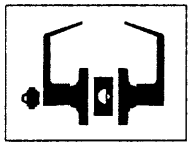

Classroom Lock*
Outside lever disengaged and unlocked by key. Inside lever always unlocked. Vandlgard is designed to disengage outside spindle from latch when in locked condition.

ND96PD F86

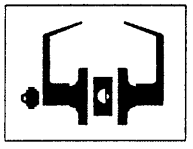

Storeroom Lock*
Outside lever always disengaged. Entrance by key only. Inside lever always unlocked. Vandlgard is designed to disengage outside spindle from latch when in locked condition.

ND96PDEL

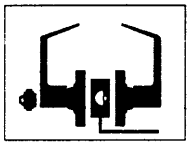

Electrically Locked (Fail Safe)*
Outside lever continuously disengaged electrically. Unlocked by key outside or by switch or power failure. Auxiliary latch deadlocks latchbolt when door is closed. Inside lever always free for immediate exit. Vandlgard is designed to disengage outside spindle from latch when in locked condition.

ND96PDEU

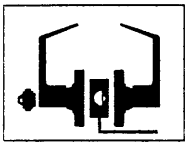

Electrically Unlocked (Fail Secure)*
Outside lever continuously disengaged until unlocked by key or electric current. Auxiliary latch deadlocks latchbolt when door is closed. Inside lever always free for immediate exit. Vandlgard is designed to disengage outside spindle from latch when in locked condition.

* *Available functions for small format interchangeable core.*

† *Caution: Double cylinder locks on residences and any door in any structure which is used for egress are a life safety hazard in times of emergency and their use is not recommended. Installation should be in accordance with existing codes only.*

LCN 4040 SERIES

FEATURES

CLOSER MOUNTS
***HINGE (PULL) SIDE**
TOP JAMB (PUSH SIDE)
PARALLEL ARM (PUSH SIDE)

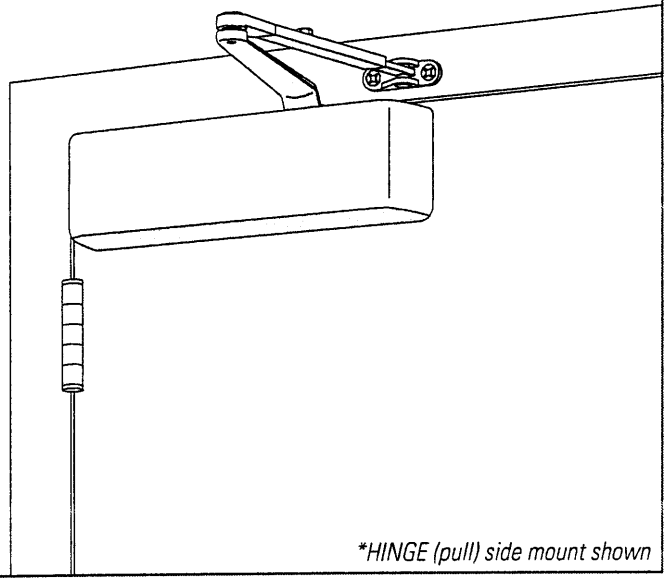

**HINGE (pull) side mount shown*

The 4040 SUPER SMOOTHEE® is LCN's most flexible heavy duty closer designed for institutional and other rugged high traffic applications.

- **Ten Million Cycles**
- **Cast Iron**
- **Forged Steel Arm**
- **Double Heat Treated Steel Pinion**
- **All Weather Fluid**
- **Non-Handed**
- **LCN® Fast™ Power Adjust**
- **Fast & Accurate Installation**
- **UL & ULC Listed**

- Standard 4040 series closer shipped with regular arm, standard plastic cover, and self reaming and tapping screws. See 4040 Series pages 34 & 35 for options.
- Non-sized cylinder is adjustable for interior doors to 5'0" and exterior doors to 4'0".
- Closer mounts hinge side, top jamb, and parallel arm w/PA Shoe on either right or left swinging doors.
- Closers to meet ADA requirements. See 4040 Series page 36.
- Standard or optional custom powder coat finish.
- Optional plated finish on cover, arm, and fasteners.
- Optional SRI primer for installations in corrosive conditions.
- Optional designer series metal cover
- UL and ULC listed for self-closing doors without hold-open.
- Tested and certified under ANSI Standard A156.4, grade one.

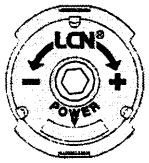

The 4041 includes the
LCN® FAST™ Power Adjust,
a revolutionary visual indicator for Spring Power Adjustment.

MOUNTING					FINISH		COVER			CYLINDER					**ARM FUNCTION						
HINGE(PULL)SIDE	TOP JAMB (PULL)	TOP JAMB (PUSH)	PARALLEL ARM	STOP FACE	POWDER COAT	PLATED	PLASTIC	METAL	DESIGNER METAL	NON-HANDED	NON-SIZED	ACCESSIBILITY	DELAYED ACTION	AVB***	REGULAR(DOUBLE)	STANDARD(SINGLE)	HOLD-OPEN	FUSIBLE LINK	EDA/HEDA	CUSH/HCUSH	SCUSH/SHCUSH
●	○	●	●	○	●	●	●	●	●	●	●	♿	●	○	120°	○	120°	○	180°	110°	110°

● *Available*
○ *Not available*

♿ *Closer available with less than 5.0 lbs. opening force on 36" door.*
***Maximum opening/hold-open point with standard template.*
**** Advanced Variable Backcheck*

LCN CLOSERS
121 W. RAILROAD AVE.
P.O. BOX 100
PRINCETON, IL, USA 61356-0100

PHONE 800-526-2400
FAX 800-248-1460
www.lcnclosers.com
3/04

LCN 4040 SERIES

MOUNTING DETAILS

HINGE (PULL) SIDE MOUNTING

MAXIMUM OPENING

Templating allows up to 120°.

Hold-open points 90° up to 120° with hold-open arm.

Optional, Non-handed Designer Series Metal Cover

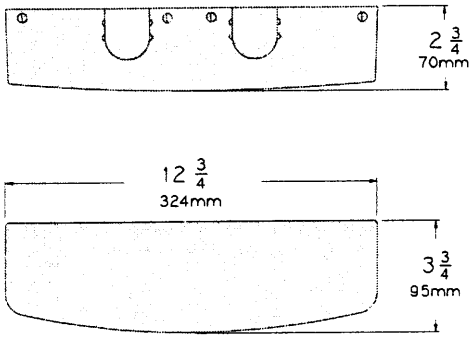

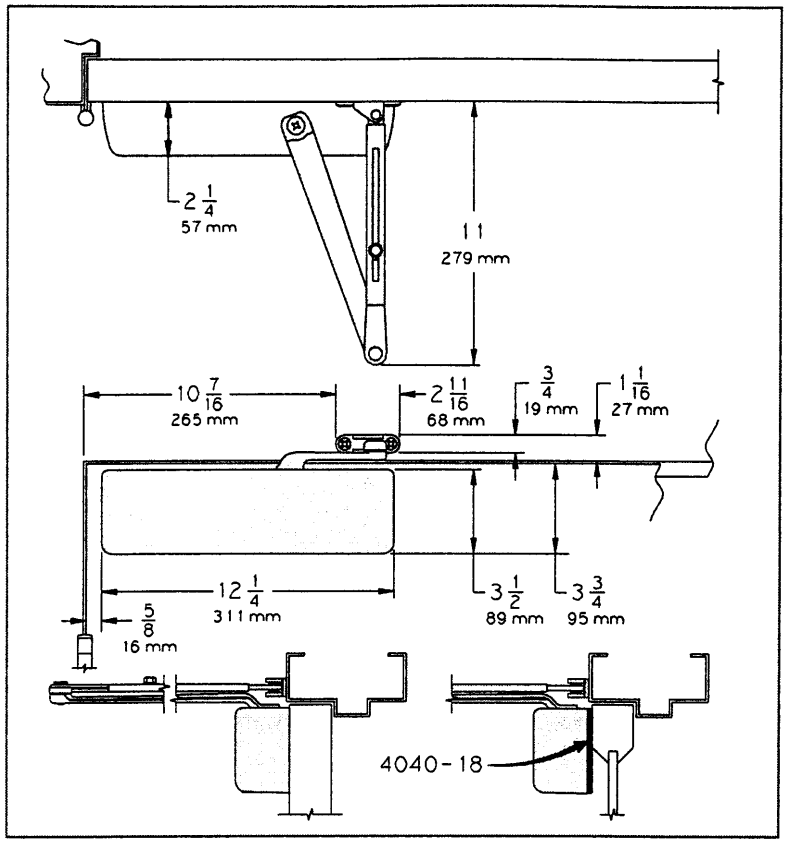

- **Butt Hinges** should not exceed 5" (127 mm) in width.
- **Auxiliary Stop** is recommended at hold-open point or where a door cannot swing beyond 120°.
- **Reveal** should not exceed 3/4" (19 mm) for regular arm or hold-open arm.
- **Top Rail** less than 3 3/4" (95 mm) requires PLATE, 4040-18. Plate requires 2" (51 mm) minimum. With Designer Series metal cover, use PLATE, 4040-18DS1
- **Clearance** of 2 3/8" (60 mm) behind door required for 90° installation. 2 7/8" (73 mm) for Designer Series metal covers
- **Delayed Action** Add suffix "DEL" to selected cylinder (eg. 4041 DEL). Delays closing from 120° to 70°. Delay time adjustable up to approximately 1 minute.
- **Bull Nose Trim** requires SOFFIT SHOE, 4040-65.
- **Corner Bracket** available for doors where top jamb or parallel arm mounting can not be used. 4040-16 allows 110° opening. Projects 5" (127 mm) from stop, 12 13/16" (325 mm) from frame. 4040-17 allows 100° opening with certain auxiliary door holders (consult factory). Projects 6 3/8" (162 mm) from stop, 13 11/16" (348 mm) from frame.

Options

- Delayed action cylinder.
- Hold-open arm.
- Metal or lead lined cover.
- Corner bracket.
- Designer Series metal cover.

Special Templates

Customized installation templates or products may be available to solve unusual applications. Contact LCN for assistance.

LCN CLOSERS
121 W. RAILROAD AVE.
P.O. BOX 100
PRINCETON, IL, USA 61356-0100

PHONE 800-526-2400
FAX 800-248-1460
www.lcnclosers.com
3/04

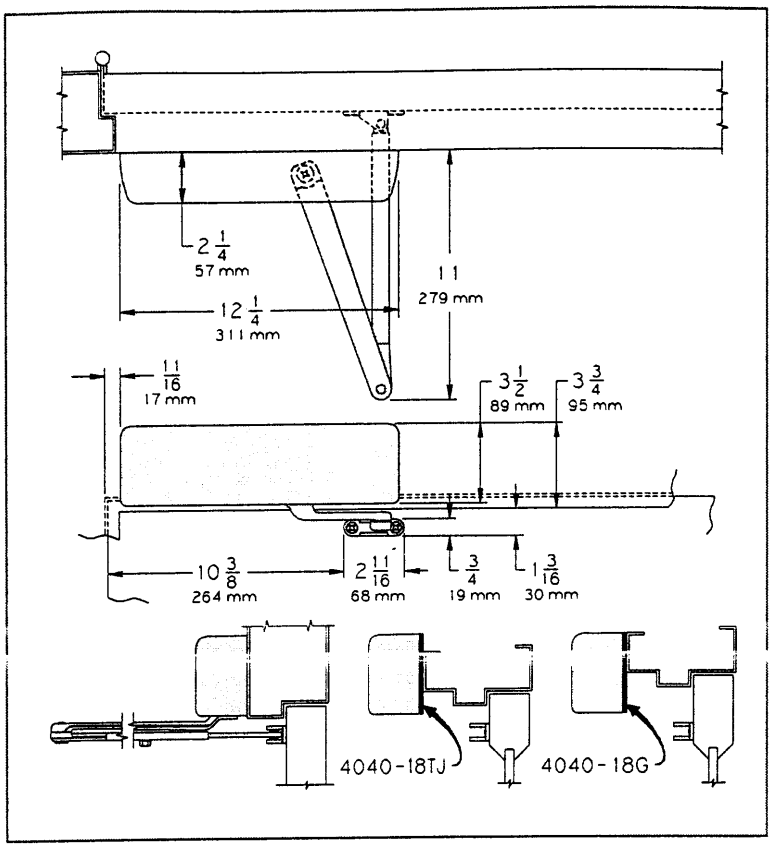

TOP JAMB (PUSH SIDE) MOUNTING

MAXIMUM OPENING

Templating allows up to 120°.

Hold-open points 85° up to 120° with hold-open arm.

Optional, Non-handed Designer Series Metal Cover

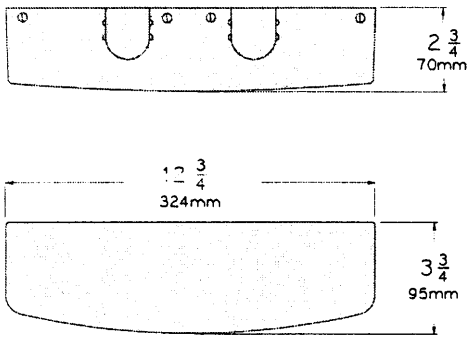

- **Butt Hinges** should not exceed 5" (127 mm) in width.
- **Auxiliary Stop** is recommended at hold-open point or where the door cannot swing 120°.
- **Reveal** of 2 9/16" (65 mm) allows 120° opening for REGULAR ARM or standard HOLD-OPEN ARM. 4 13/16" (122 mm) allows up to 120° opening with LONG ARM where standard rod and shoe is replaced with optional LONG ROD AND SHOE 4040-79LR. Use H-LONG ARM with LONG HEAD AND TUBE, 4040-78HL for hold-open. 8" (203 mm) allows up to 120° opening with EXTRA LONG ARM where standard rod and shoe is replaced with optional EXTRA LONG ROD AND SHOE, 4040-79ELR.
- **Top Rail** requires 1 1/4" (32 mm) minimum.
  2 1/4" (57 mm) minimum with closer on PLATE, 4040-18TJ.
  3" (76 mm) minimum with closer on PLATE, 4040-18G. With Designer Series metal cover, use PLATE, 4040-18TJDS1
- **Head Frame** less than 3 1/2" (89 mm) requires PLATE, 4040-18TJ.
  With flush ceiling, use PLATE, 4040-18G.
  Either plate requires 1 3/4" (44 mm) minimum.
- **Delayed Action** Add suffix "DEL" to selected cylinder (eg. 4041 DEL).
  Delays closing from 120° to 80°.
  Delay time adjustable up to approximately 1 minute.

Options

- Delayed action cylinder.
- Long arm, extra long arm, hold-open arm, long hold-open arm.
- Metal or lead lined cover.
- Designer Series metal cover.

Special Templates

Customized installation templates or products may be available to solve unusual applications. Contact LCN for assistance.

LCN CLOSERS
121 W. RAILROAD AVE.
P.O. BOX 100
PRINCETON, IL, USA 61356-0100

PHONE 800-526-2400
FAX 800-248-1460
www.lcnclosers.com
3/04

LCN 4040 SERIES

MOUNTING DETAILS

PARALLEL ARM (PUSH SIDE) MOUNTING

Optional mounting requires PA SHOE, 4040-62PA for REGULAR or HOLD-OPEN arms. Add prefix "P" to closer description (eg. P4041). P4041 closer includes 4040-201 FIFTH HOLE SPACER to support PA SHOE.

MAXIMUM OPENING

180° opening/hold-open points with all except CUSH arms.

110° opening/hold-open with CUSH arms.

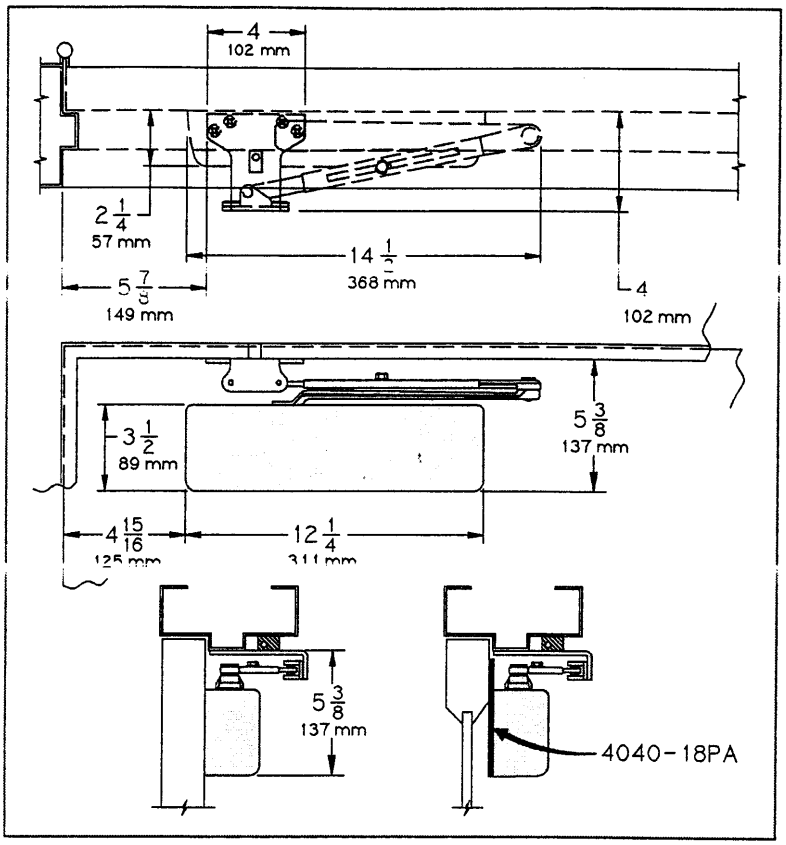

Optional, Non-handed Designer Series Metal Cover

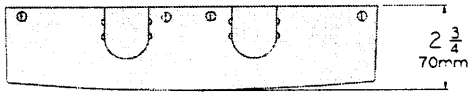

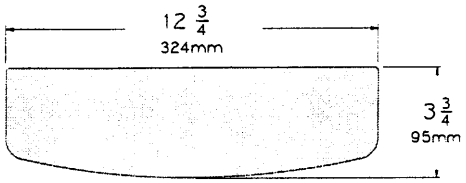

Options

- Delayed action cylinder.
- Hold-open, EDA, HEDA, CUSH, HCUSH, SPRING CUSH, or SPRING HCUSH arm.
- Metal or lead lined cover.
- Designer Series metal cover.

Special Templates

Customized installation templates or products may be available to solve unusual applications. Contact LCN for assistance.

4040 REGULAR or HOLD-OPEN MOUNT

- **Butt Hinges** should not exceed 5" (127 mm) in width.
- **Auxiliary Stop** is recommended at hold-open point, where the door cannot swing 180°, or where CUSH-N-STOP arm is not used.
- **Clearance** for 4040-62PA shoe is 4" (102 mm) from door face.
  EDA shoe projects 5 1/2" (140 mm) from door face.
  CUSH shoe projects 6" (152 mm) from door face.
- **Top Rail** less than 5 3/8" (137 mm) measured from the stop requires PLATE, 4040-18PA. Plate requires 2" (51 mm) minimum from the stop. With Designer Series metal cover, use PLATE, 4040-18PADS1
- **Head Frame** flush or rabetted requires PA SHOE ADAPTER, 4040-418.
- **Stop Width** minimum 1" (25 mm). CUSH arm requires minimum 1 1/2" (38 mm).
- **Blade Stop** clearance requires 1/2" (13mm) BLADE STOP SPACER, 4040-61.
- **Delayed Action** Add suffix "DEL" to selected cylinder (eg. P4041 DEL). Delays time adjustable up to approximately 1 minute.

LCN CLOSERS
121 W. RAILROAD AVE.
P.O. BOX 100
PRINCETON, IL, USA 61356-0100

PHONE 800-526-2400
FAX 800-248-1460
www.lcnclosers.com
3/04

LCN 4040 SERIES

Mounting details are the same as 4040 REGULAR or HOLD-OPEN except as listed below. 4040 closers ordered with EDA or CUSH arms include 4040-201 FIFTH HOLE SPACER to support the shoe.

4040 EDA MOUNT

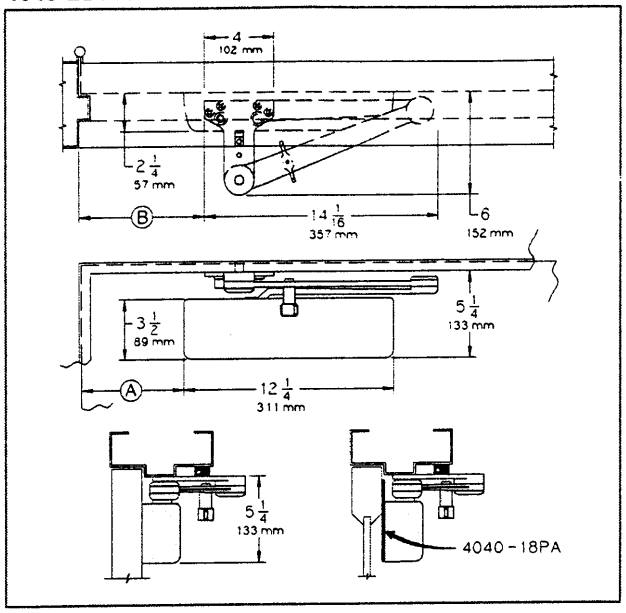

4040 CUSH MOUNT

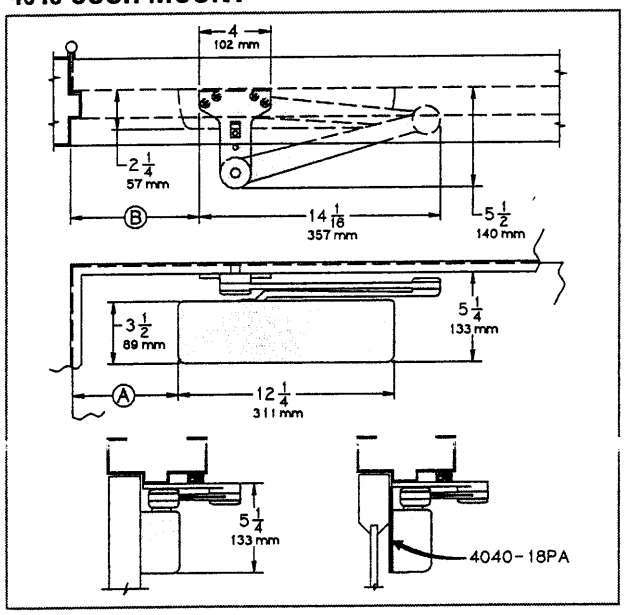

- **Clearance** for 4040-62EDA is 5 1/2" (140 mm) from door face. 6" (152 mm) for CUSH.
- **Head Frame** flush or rabetted requires CUSH FLUSH PANEL ADAPTER, 4040-419.
- **CUSH ARM** requires SHOE SUPPORT, 4040-30 for fifth screw anchorage for narrow frames.
- **Delayed Action** Add suffix "DEL" to selected cylinder (eg. 4041 DEL). Delays closing from maximum opening to;
  115° with 180° template.
  95° with 110° template.
  85° with 100° template.
  75° with 90° template.
  Delay time adjustable up to approximately one minute.

MAXIMUM OPENING

EDA arm can be templated for points at: 110°,
Ⓐ = 6 3/8" (162 mm)
Ⓑ = 7 3/4" (197 mm)
or 180°.
Ⓐ = 2 7/8" (73 mm)
Ⓑ = 4 1/4" (108 mm)
Hold-open points up to maximum opening with HEDA arm.

CUSH arms can be templated for opening/hold-open point at:
85°,
Ⓐ = 7 15/16" (202 mm)
Ⓑ = 9 1/8" (232 mm)
90°,
Ⓐ = 7 3/16" (183 mm)
Ⓑ = 8 1/2" (216 mm)
100°,
Ⓐ = 6 1/16" (154 mm)
Ⓑ = 7 1/4" (184 mm)
or 110°.
Ⓐ = 5 1/16" (129 mm)
Ⓑ = 6 3/8" (162 mm)

Spring Cush dead stop points are approximately 5° more than templated stop point. Hold open at templated stop points.

LCN CLOSERS
121 W. RAILROAD AVE.
P.O. BOX 100
PRINCETON, IL, USA 61356-0100

PHONE 800-526-2400
FAX 800-248-1460
www.lcnclosers.com
3/04

LCN 4040 SERIES

TABLE OF SIZES

4041 cylinder is adjustable from size 1 through size 6 and is shipped set to size 3.

Closing power of 4040 series closers may be adjusted 50%.

——► Indicates recommended range of door width for closer size.

EXTERIOR (and VESTIBULE) DOOR WIDTH

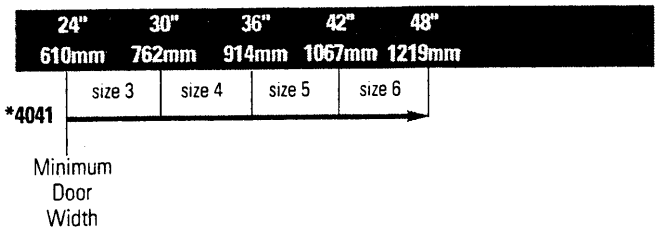

INTERIOR DOOR WIDTH

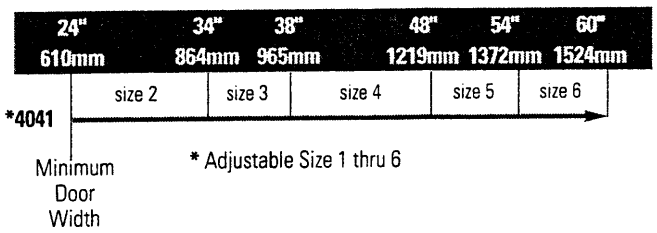

* Adjustable Size 1 thru 6

REDUCED OPENING FORCE 4040 CLOSERS

CAUTION ! Any manual door closer, including those certified by BHMA to conform to ANSI Standard A156.4, that is selected, installed and adjusted based on ADA or other reduced opening force requirements may not provide sufficient power to reliably close and latch a door.

Refer to POWER OPERATORS section for information on systems that meet reduced opening force requirements without effecting closing power.

	DOOR WIDTH	36"	42"	48"
♿	8.5* lbs.	4041	4041	4041
	5.0* lbs.	4041	4041	4041

** Maximum opening force*

HOW-TO-ORDER 4040 SERIES CLOSERS

1. SELECT FINISH.

☐ Standard Powder Coat _____
Aluminum, Dark Bronze , Tan, Statuary, Light Bronze, Black, Brass.

Closer will be shipped with:
- STANDARD COVER,
- REGULAR ARM,
- SELF-REAMING and TAPPING SCREWS, unless options listed below are selected.

CLOSER OPTIONS

CYLINDER
☐ Delayed Action (DEL)

COVER
☐ Lead Lined (LL)
☐ Metal (specify right or left hand) (MC)
☐ Designer Series Metal (non-handed) (DS1)

FINISH
☐ Custom Powder Coat (RAL) _____
(handed metal cover required)
☐ Plated Finish, US _____
(handed metal cover required)
☐ SRI primer

ARM
☐ Regular w/62PA (Rw/PA)
☐ Regular w/62A (R/62A)
☐ Long (LONG)
☐ Extra Long (XLONG)
☐ Hold-Open (H)
☐ Hold-Open w/62PA (Hw/PA)
☐ Long Hold-Open (HLONG)
☐ EDA (optional -62G or -145)
☐ HEDA (specify right or left hand, optional-62G or -145)
☐ Cush-N-Stop (CUSH)
☐ HCush-N-Stop (HCUSH)
☐ Spring Cush (SCUSH)
☐ Spring HCush (SHCUSH)

OPTIONAL SCREW PACKS
☐ TB* w/Self-Reaming and Tapping (TBSRT)
☐ Wood & Machine Screw (WMS)
☐ TB*, Wood & Machine Screw (TBWMS)
☐ TORX Machine Screw (TORX)
☐ TB* & TORX Machine Screw (TBTRX)
* Specify door thickness if other than 1 3/4".

INSTALLATION ACCESSORIES
☐ Plate, 4040-18
☐ Plate, 4040-18TJ
☐ Plate, 4040-18G
☐ Plate, 4040-18PA
☐ Plate, 4040-18DS1
☐ Plate, 4040-18TJDS1
☐ Plate, 4040-18PADS1
☐ CUSH Shoe Support, 4040-30
☐ Blade Stop Spacer, 4040-61
☐ Auxiliary Shoe, 4040-62A
☐ Soffit Shoe, 4040-65
☐ PA Shoe Adapter, 4040-418
☐ CUSH Flush Panel Adapter, 4040-419

SPECIAL TEMPLATE
☐ ST- _____

Combination aluminum thresholds - Series AB

AB2

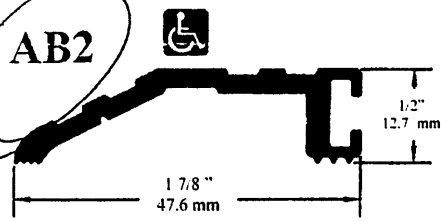

AB3

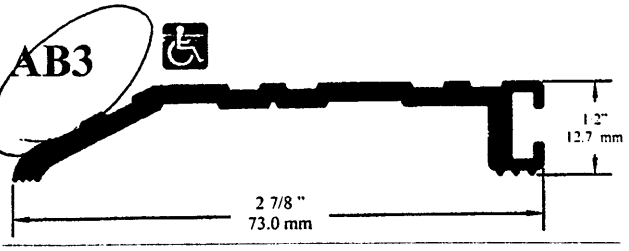

AB4

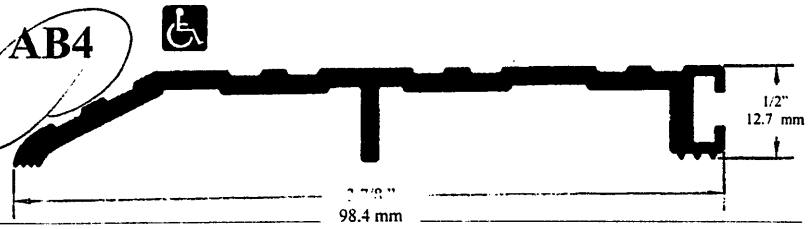

AB5

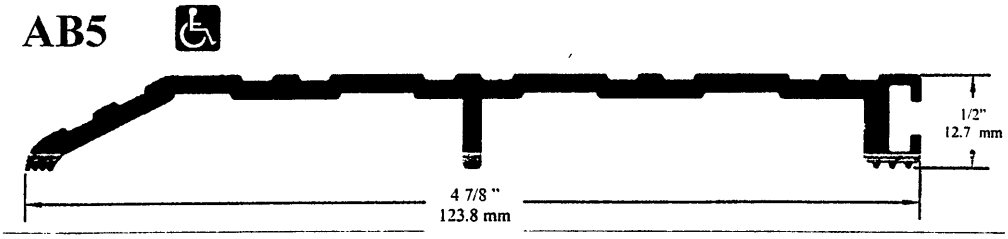

AB6

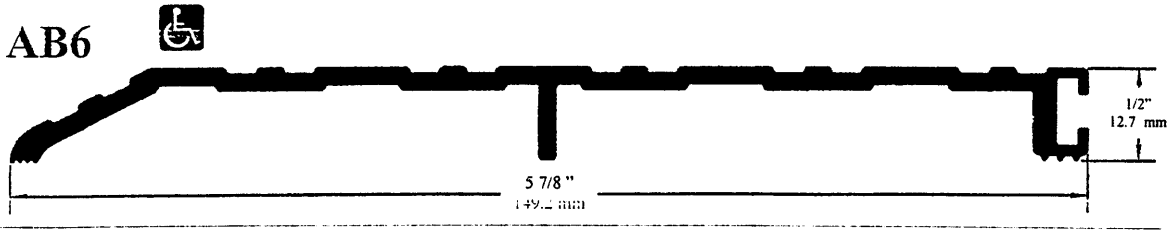

AB7

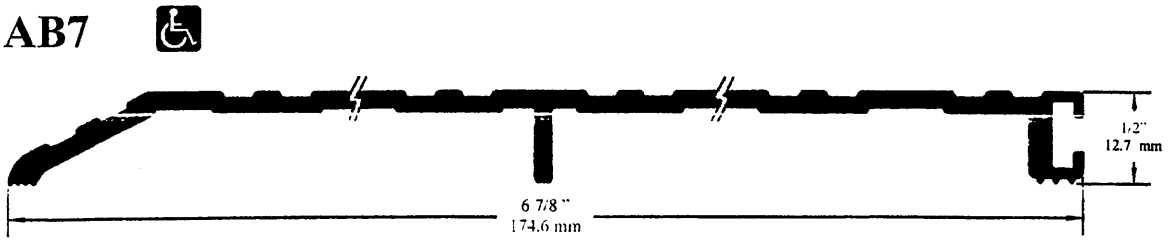

Extruded aluminum alloy 6063T5

Scale 1" (25.4 mm) = 1" (25.4 mm)

Unique Sash Balance Ltd
8301, Marconi, Anjou, Qc, H1J 2W4
Tel: (514) 493-1353 Fax: (514) 493-0571 1-800-663-1353

Unique

Combination aluminum thresholds - Series AB

AB33

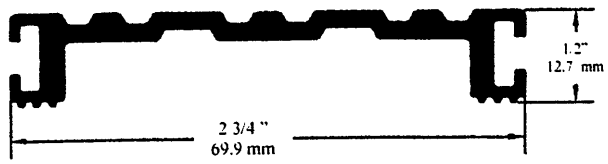

AB11

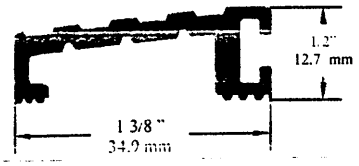

AB12

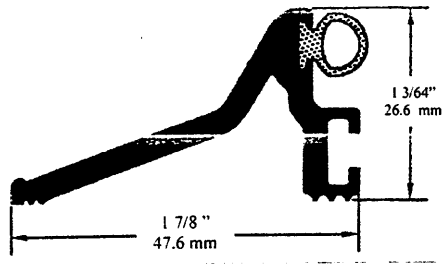

ABBT

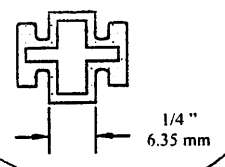

Extruded Aluminum alloy 6063T5

Scale 1" (25.4 mm) = 1.75" (44.45 mm)

Unique Sash Balance Ltd
8301, Marconi, Anjou, Qc, H1J 2W4
Tel: (514) 493-1353 Fax: (514) 493-0571 1-800-663-1353

Weatherstrip and/or soundproofing

1650 AN-MB-MF

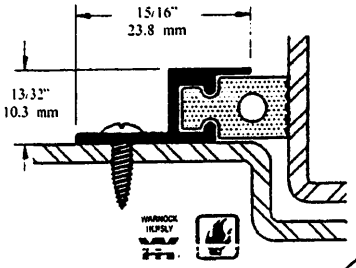

1600 AN-MF

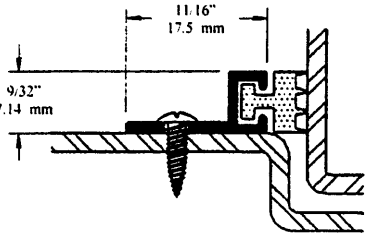

CF9 AN-MB

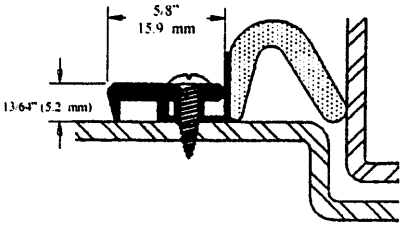

2000 AN-MB

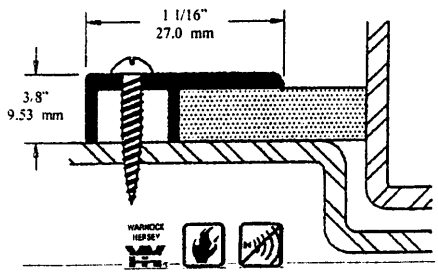

J140 AN-MB

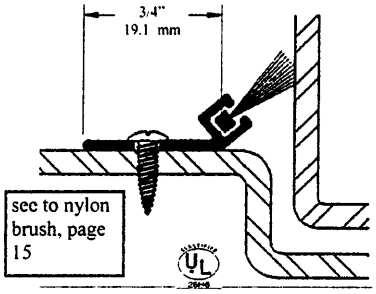

see to nylon brush, page 15

1900 AN-MB

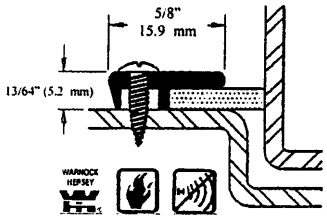

2200 AN-MB

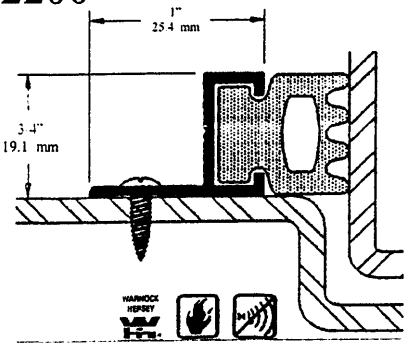

17V AN-MB

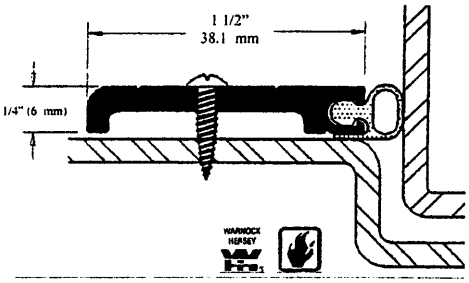

DS1 AN-MF

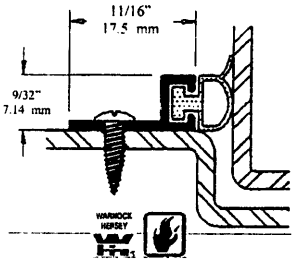

DS184 BL-BR-MF

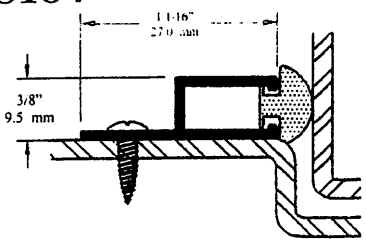

DS183 BL-BR-MF

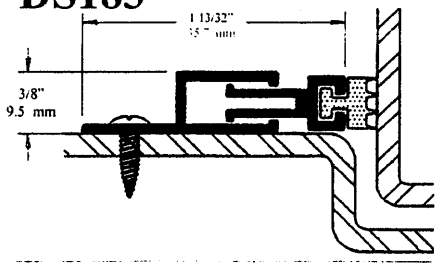

AN = Clair anodized
MB = Medium bronze
MF = Mill finish
BL = White paint
BR = Dark brown paint

Scale 1" (25.4 mm) = 1" (25.4 mm)

Unique Sash Balance Ltd
8301, Marconi, Anjou, Qc, H1J 2W4
Tel: (514) 493-1353 Fax: (514) 493-0571 1-800-663-1353

Unique

Door sweeps

2100 AN-MB

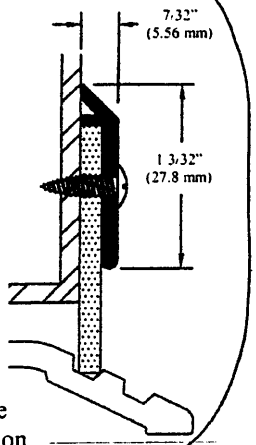

A180 AN-MB

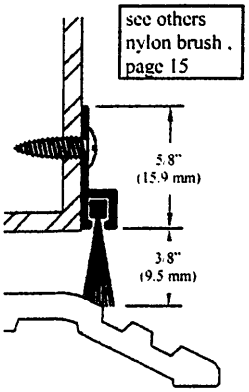

DS2 MF

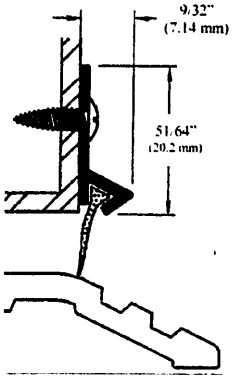

1800V AN-MB

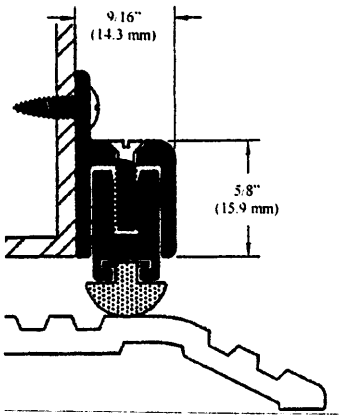

2000 AN-MB

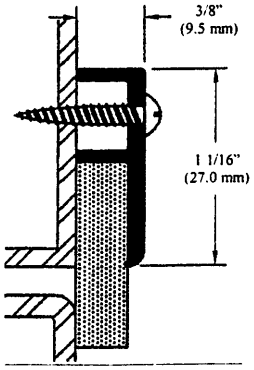

AV175 MF

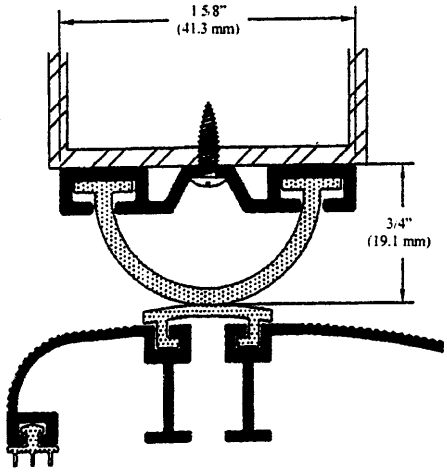

AV1181 - AV1182 MF

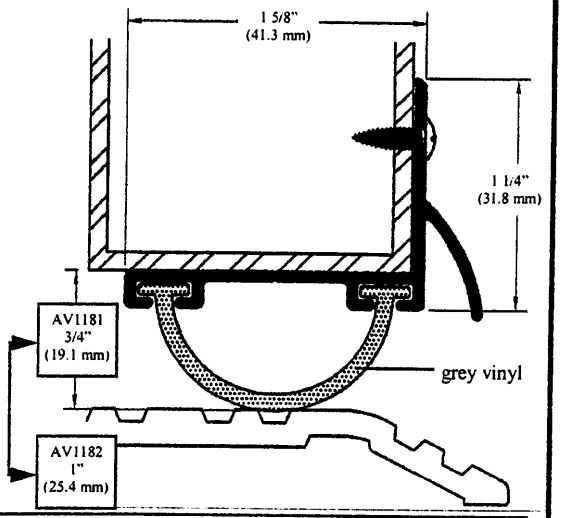

Water drip

AW2 AN

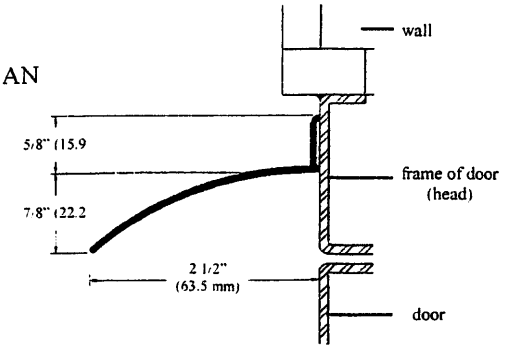

AW1 MF

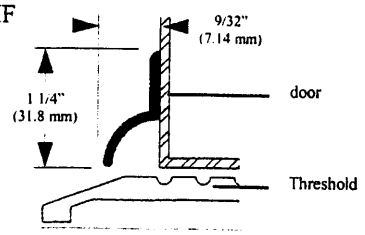

Scale 1" (25.4 mm) = 1" (25.4mm)

Unique Sash Balance Ltd
8301, Marconi, Anjou, Qc, H1J 2W4
Tel: (514) 493-1353 Fax: (514) 493-0571 1-800-663-1353

Unique

Gasketing for overhead door closers

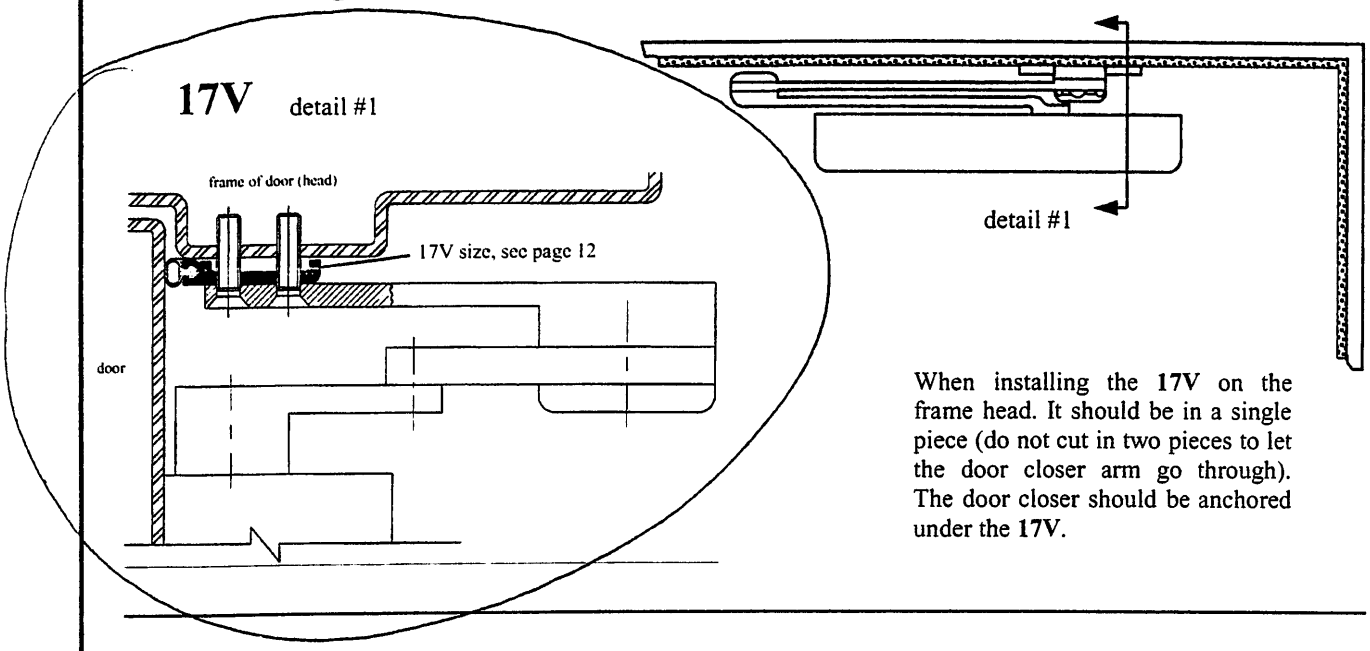

When installing the **17V** on the frame head. It should be in a single piece (do not cut in two pieces to let the door closer arm go through). The door closer should be anchored under the **17V**.

WARNOCK HERSEY CLASSIFIED FIRE DOOR GASKETING

Automatic door bottoms

50K	20 min.
50A and 50SHD	90 min.
320V and 50MHD	3 hours

Astragals

100A and #14	90 min.

Gasketing

2200, 1900, 1800, 1700, 2000 and 2100	90 min.
1650, 1500N, 1500P, 1500V and 17V	3 hours

Thresholds

AD7 and ATP5	3 hours

Smoke seal

CF-10	3 hours

Unique Sash Balance Ltd
8301, Marconi, Anjou, Qc, H1J 2W4
Tel: (514) 493-1353 Fax: (514) 493-0571 1-800-663-1353

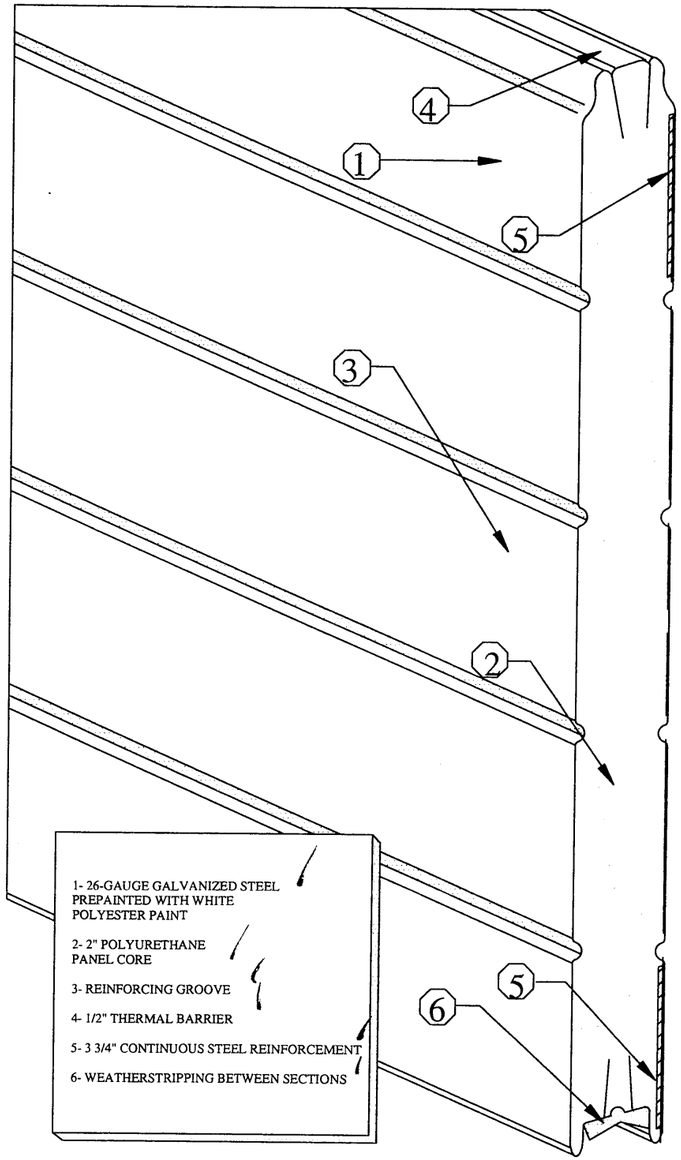

1- 26-GAUGE GALVANIZED STEEL PREPAINTED WITH WHITE POLYESTER PAINT

2- 2" POLYURETHANE PANEL CORE

3- REINFORCING GROOVE

4- 1/2" THERMAL BARRIER

5- 3 3/4" CONTINUOUS STEEL REINFORCEMENT

6- WEATHERSTRIPPING BETWEEN SECTIONS

BarilMax 200

PRODUCT DESCRIPTION

THESE DOORS CAN COVER BAYS UP TO 32 FEET WIDE WITHOUT USING POSTS FOR THE CENTRE AXIS AND CAN THEREFORE ALSO BE USED FOR LARGE PORTALS. TYPICAL BUT NON-EXHAUSTIVE EXAMPLES OF APPLICATIONS FOR THESE DOORS INCLUDE: HEATED OR AIR-CONDITIONED FACILITIES, HEATED WAREHOUSES, COMMERCIAL BUILDINGS, TRUCK TERMINALS, EDUCATIONAL FACILITIES, AIR TERMINAL AND THEIR ANNEXES, AS WELL AS FARM BUILDINGS.

MATERIALS AND COMPONENTS:

ALL OUR DOORS ARE MADE OF SANDWICH PANELS WITH A GALVANIZED COVERING AND A POLYURETHANE CORE. INDIVIDUAL HEIGHTS ARE 21 INCHES AND 24 INCHES. THESE PANELS ARE AVAILABLE IN A WIDE RANGE OF LENGTHS.

A TYPICAL CROSS SECTION OF THESE DOORS REVEALS 2-INCH THICK POLYURETHANE FOAM (ISOCYANATE) WITH A DENSITY OF 2.6 LB/CU. FT., LAMINATED ONTO INTERIOR AND EXTERIOR STEEL COVERINGS BY MEANS OF A CONTINUOUS MANUFACTURING PROCESS.

1. GALVANIZED SHEET STEEL: G-90 GALVANIZING, GRADE A COMMERCIAL QUALITY.

2. FINISH: POLYESTER BASED COATING, 1 MIL THICK, APPLIED ON THE EXTERIOR AND HIDDEN SURFACE OF THE STEEL.

3. FLAME RETARDANT, LAMINATED URETHANE THERMAL INSULATION MEETING THE MVSS-.02 STANDARD, APPLIED ONTO THE INTERIOR AND EXTERIOR STEEL COVERINGS BY MEANS OF A CONTINUOUS MANUFACTURING PROCESS, WITH A THICKNESS OF 50.8 MM (2") AND AN R-VALUE FACTOR OF 8.33 PER INCH OF INSULATION.

4. TOTAL DOOR THICKNESS OF 50.8 MM (2").

5. INTERIOR AND EXTERIOR COVERINGS: MINIMUM 26-GAUGE GALVANIZED STRUCTURAL STEEL. EACH SECTION HAS FOUR V-GROOVES.

6. HORIZONTAL JOINTS: U-SHAPED WITH A URETHANE INSULATED THERMAL BARRIER AT LEAST 16 MM (5/8") THICK.

7. SECTION ENDS: GALVANIZED 20-GAUGE STEEL CAP AT THE END OF EACH PANEL.

8. 3 3/4" HIGH, CONTINUOUS 20-GAUGE STEEL REINFORCEMENT AT THE TOP AND BOTTOM OF EACH SECTION, RUNNING ALONG THE ENTIRE WIDTH OF THE PANELS TO FACILITATE THE INSTALLATION OF HINGES.

9. FINISH: STANDARD WHITE, BAKED EPOXY IMITATION STUCCO INTERIOR AND EXTERIOR FINISH.

MANUFACTURING PROCESS

POLYURETHANE IS WIDELY RECOGNIZED AS AN EFFICIENT INSULATING MATERIAL AND KNOWN TO BE EXCEPTIONALLY RESISTANT.

ONLY A MANUFACTURING PROCESS INVOLVING THE CAREFULLY CONTROLLED, CONTINUOUS APPLICATION OF FOAM CAN ENSURE THAT THE FOAM WILL ADHERE PERMANENTLY TO THE METAL COVERINGS. NO OTHER PROCESS CAN PRODUCE A BETTER QUALITY AND MORE UNIFORM HOMOGENOUS PANEL, FREE OF VOIDS AND AIR POCKETS. OVER TIME, AIR POCKETS CAN DRAMATICALLY REDUCE THE RESISTANCE AND INSULATING PROPERTIES OF DOOR PANELS.

A RIGOROUS QUALITY CONTROL CHECK IS MADE AT EACH STAGE OF THE PROCESS TO ENSURE CONSISTENCY IN TERMS OF PANEL THICKNESS AND FOAM DENSITY.

KUDLIK CONSTRUCTION LTD
P.O. BOX 727, 1519 FEDERAL ROAD
IQUALUIT, NUNAVUT X0A 0H0
PHONE: (867) 979-1136
FAX: (867) 979-1[illegible]
08/07/2005

STEEL DOOR PROFILE

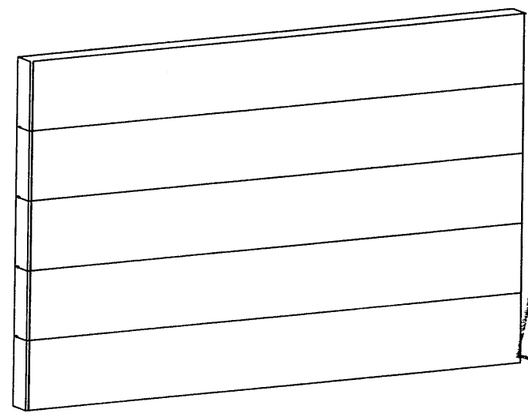

REVIEWED
REVIEWED AS NOTED
RESUBMIT
DATE 14 Jul 05
SIGNATURE

Number	Qty	DIMENSIONS Width	Height	Number of sections	Number of windows sections	Number of windows by sections	Windows TYPE	Width	Heigth	Material covering	Finish	Color INTERIOR EXTERIOR	Notes:
#101A	1	3000	2300	4	0					STEEL	Stucco	WHITE / WHITE	
#205	1	3000	2700	5	0					STEEL	Stucco	WHITE / WHITE	

Baril Portes de garage

500 Boul De La Bonaventure, Victoriaville, Qc.
Tél.: 819-758-7538 Fax.: 819-758-1892 G6T 2E9

JOB SITE:	WWTP Phase 1 Iqaluit
ARCHITECT:	
CONTRATOR:	Kudlik Construction Ltd
DEALER:	Baril Portes de garage inc.
CHECK BY:	Stéphane Provencher
DATE: 7 Juillet 2006	DRAWING #: SV-040706-A

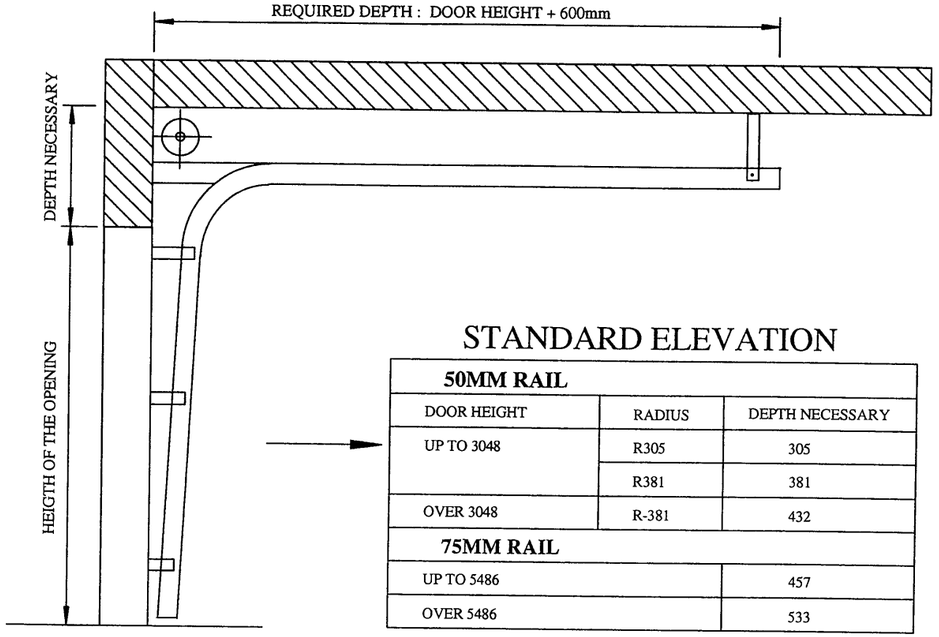

STANDARD ELEVATION

50MM RAIL		
DOOR HEIGHT	RADIUS	DEPTH NECESSARY
UP TO 3048	R305	305
	R381	381
OVER 3048	R-381	432
75MM RAIL		
UP TO 5486		457
OVER 5486		533

TYPE OF MOVEMENT: VERTICAL LIFTING
TYPE OF TRACKS: 902-T
STEEL THICKNESS: 14-GAUGE
TRACK SIZE: 50mm
WEATHERSTRIPPING EDGING: MODEL RW-25
CONTINUOUS ANGLE TO HOLD DOWN TRACKS

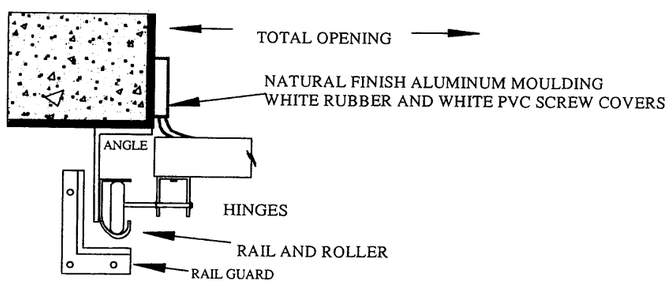

DOOR#	QTY	WIDTH	HEIGTH	CLEARANCE	TRAC	SPRING TYPE
#101A	1	3000	2300	256	50	Torsion
#205	1	3000	2700	256	50	Torsion

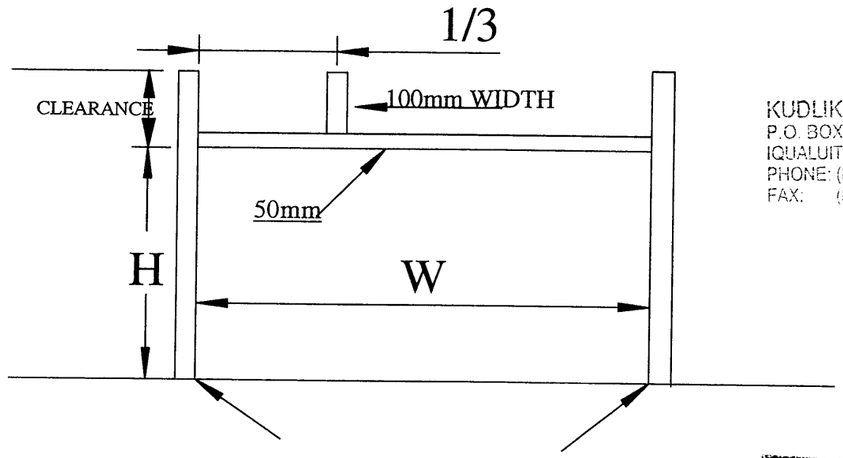

SUPPORTS REQUIRED FOR TORSION SPRINGS
FRAME FOR DOORS SMALLER THAN 3658mm
INSIDE VIEW

1. Frames, frame extensions, and anchor plates must be supplied and correctly installed by the contractor who must make sure they are plumb and at a 90o angle.
   All interior sides must be flush one against the other.
2. All clearances shown must be free of obstructions.
3. Steel frames can be made from U-beams for angles or from a flat iron angle assembly.
   The interior side of the jambs must be at least 77mm wide to accommodate the vertical tracks as well as the balancing system.

KUDLIK CONSTRUCTION LTD
P.O. BOX 727, 1519 FEDERAL ROAD
IQUALUIT, NUNAVUT X0A 0H0
PHONE: (867) 979-1166
FAX: (867) 979-1169

☑ REVIEWED
☐ REVIEWED AS NOTED
☐ RESUBMIT
DATE 14/Jul 05

Baril Portes de garage
500 Boul De La Bonaventure, Victoriaville, Qc.
Tél.: 819-758-7538 Fax.: 819-758-1892 G6T 2E9

JOB SITE:	WWTP Phase 1 Iqaluit
ARCHITECT:	
CONTRATOR:	Kudlik Construction Ltd
DEALER:	Baril Portes de garage inc.
CHECK BY:	Stéphane Provencher
DATE: 7 Juillet 2006	DRAWING #: SV-040706-B

MARMOLEUM® fresco

sheet linoleum

ENGLISH

MARMOLEUM APPLICATIONS
Lobbies, Hallways/Corridors, Conference rooms, Public areas, Storage
rs, Lunchrooms, Cafeterias, Dining Rooms, Classrooms, Dormitory
or hallways, Jails/Prisons, Patient rooms, Pharmacies, Physical
y rooms, Utility rooms, Stages, Dance floors, Military barracks and housing, Boutiques, Specialty shops, Sales floors or Show rooms, Waiting areas and Tabletops.

TECHNICAL DATA
Specifications
Meets or exceeds requirements for ASTM F2034 for Linoleum Sheet flooring.
Meets or exceeds National Building Code of Canada 1980 - Section 9.31.5
Meets or exceeds National Defense Canada - Schedule 010000-09666-01

Static Load Limit
450 Pounds per square inch. ASTM F-970.

Slip Resistance
Meets or exceeds A.D.A. recommendations of .6 for flat surfaces.

Flexibility
Will not crack or break when bent around a 1.4" (35 mm) diameter cylinder.

Fire Resistance
ASTM E-662/NFPA 258 (Smoke Density) - 450 or less
ASTM E-648/NFPA 253 (Critical Radiant Flux) - Class 1
F.M.V.S.S.-302 - Meets or exceeds.
CAN/UCL - S 102.2 - M88 Flame Spread Rating and Smoke.

Resistance to Bacteria
Marmoleum provides a self-sanitizing quality in the form of a bactericidal effect. Tests indicate that Marmoleum has a sterile zone around the material, inhibiting contaminants such as staphylococcus aureas.

Castor Resistance
During 25,000 cycles of 3 wheels loaded with 66 lbs. No damage.

Impact Sound Reduction: 6dB.

CONSTRUCTION
Marmoleum homogenous floor coverings shall be made of natural materials consisting of linseed oil, wood flour, rosin binders, dry pigments, mixed and calendered onto a natural jute backing.

PHYSICAL CHARACTERISTICS
(Dimensions are approximate)
..... 79 inches (2 Meters)
..... 105 linear feet (32 Meters)
Gauge ..... 1/10" (2.5 mm)
Backing ..... Jute
Roll size .....77 square yards (64 square meters)

TECHNICAL SERVICES
For detailed Product Specifications, Installation Specifications, Cleaning and Initial Maintenance Instructions, and warranty information, contact Forbo Linoleum Support Services at 1-800-842-7839.

Homogeneous linoleum
In accordance with European standards (EN 548 and EN 670) Marmoleum is manufactured on the basis of a homogeneous mixture of raw materials. This mixture is applied to the jute carrier in two layers.
The advantages are:
- The first layer smooths the jute carrier and prevents the natural yarn causing irregularities in the top layer of the floor covering, thus ensuring a smooth surface.
- Thus produced, the end product is a more compact floor covering with measurably enhanced indentation resistance, and increased performance when subjected to mechanical loads (e.g. castor resistance test).

Drying room yellowing
During the last phase of the production process a yellowish film, the "drying room yellowing", may appear on the floor covering. This phenomenon is more visible on the lighter shades but, when exposed to light, it disappears quickly.

ESPANOL

MARMOLEUM APLICACIONES
Lobbies, Pasillos/Corredores, Salas de Conferencias, Areas Publicas, Areas de almacenaje, Cafeterias, Comedores, Salones de Clases, Dormitorios o pasillos, Carceles/Prisiones, Cuartos de Pacientes, Farmacias, Cuartos de Terazpia Fisica, Cuartos de utileria, Escenarios, Pisos de Baile, Cuartel Militar y casas, Boutiques, Tiendas Especiales, Areas de Exhibicion, Salas de Espera y cubiertas de mesas.

INFORMACION TECNICA
Especificaciones
Iguala o excede los requisitos para ASTM F2034 para piso de Linoleum en Rollo.
Iguala o excede los codigos de la National Building de Canada 1980 - Seccion 9.13.5
Iguala o excede la escala de la Defensa Nacional de Canada 010000-09666-01

Capacidad De Carga Estatica
450 libras por pulgada cuadrada. ASTM F-970.

Resistencia A Derrapes
Iguala o excede recomendaciones de A.D.A. de .6 para superficies planas.

Flexibilidad
No se rompe o quiebra cuando es doblado sobre un cilindro de 1.4" (35 mm) de diametro.

Resistencia Al Fuego
ASTM E-662/NFPA 258 (Densidad de Humo) -450 o menos
ASTM E-648/NFPA 253 (Critico Radiente de Flujo) - Clase 1
F.M.V.S.S.- 302 - Iguala o Excede
CAN/UCL - S 102.2-M88 Clasificacion Extendida de Flama y Humo

Resistencia A Bacterias
Marmoleum provee una cualidad auto-sanitaria que es de efecto bactericida. Las pruebas indican que el Marmoleum tiene una zona esteril en el material, inhibiendo contaminantes como el staphylococo aurea.

Resistencia A Ruedas
Durante 25,000 ciclos de 3 ruedas rodando con 66 libras. Ningun Dano.

Reduccion De Sonido Al Impacto: 6 Decibeles

CONSTRUCCION
Marmoleum es un piso homogeneo hecho de materias primas naturales como aceite de linaza,corteza de arbol, resinas, pigmentos secos, mezclados y compactados en una base de yute.

CARACTERISTICAS FISICAS
(las dimensiones son aproximadas)
Ancho..... 79 pulgadas (2 metros)
Largo ..... 105 pies linelaes (32 metros)
Espesor ..... 1/10"(2.5mm)
Base..... Yute
Medida del Rollo.....77 yardas cuadradas (64 metros cuadrados)

SERVICIO TECNICO
Para detalles de Especificaciones del Producto, Especificaciones de Instalacion, Limpieza e Instrucciones de Mantenimiento Inicial, e informacion de garantia, contactar a Servicios de Soporte al Cliente al 1-800-842-7839.

Linoleum Homogéneo
De acuerdo con los estándares Europeos (EN548 y EN670) Marmoleum es manufacturado a base de una mezcla homogénea de materias primas. Esta mezcla es aplicada al yute en dos capas.
Las Ventajas son:
- La primera alisa al yute y previene que el hilado natural del yute cause irregularidades en la superficie del piso, asegurando así una superficie lisa.
- Producido así, el producto final es una cubierta de piso mas compacta con una resistencia medible, e incrementa el desempeño cuando esta sujeto a cargas mecánicas (Ej. Prueba de resistencia al desgaste, castor)

Efecto amarillento del cuarto de secado.
Durante la última fase del proceso de producción aparece una capa de color amarillento, "el efecto amarillento del cuarto de secado", puede aparecer en el piso. Este fenómeno es más visible a la sombra pero, cuando se expone a la luz, desaparece rápidamente.

FRANCAIS

UTILISATIONS DU MARMOLÉUM
Entrées, couloirs/corridors, salles de conférence, endroits pu
espaces d'entreposage, coins-repas, cafétérias, salles à man
de classe, dortoirs ou couloirs, cellules/prisons, chambres d
pharmacies, salles de physiothérapie, salles de rangement,
planchers de danse, casemes et logements militaires, boutiq
surfaces de ventes ou salles d'exposition, magasins spéciali
d'attente et dessus de table.

INFORMATIONS TECHNIQUES
Caractéristiques
Rencontre ou excède des conditions pour ASTM F 2034 pour
revêtement de sol en linoléum
Rencontre ou excède les normes du Code du Bâtiment du Ca
1980-Section 9.31.5
Rencontre ou excède les normes du Programme 010000-096
Ministère de la défense nationale du Canada

Limite de charge statique
450 livres par pouce carré (180 kg/2,5cm) ASTM F-970.

Résistance au glissement
Rencontre ou excède les recommandations de l'A.D.A. de 6
surfaces plates.

Flexibilité
Ne craque pas et ne se brise pas lorsqu' enroulé autour d'un
d'un diamètre de 1,4" (35mm).

Résistance au feu
ASTM E-662/NFPA 258 (densité de la fumée)-450 ou moins
ASTM-E 648/NFPA 253 (Fluctuation radiante critique) - catég
F.M.V.S.S.-302—Rencontre ou excède.
CAN/UCL- S 102.2-M88 Vitesse de propagation de la flamme ou

Résistance aux bactéries
Le Marmoleum possède des propriétés auto-désinfectantes
d'effet bactéricide. Les tests démontrent que le Marmoleum
zone aseptisée en freinant les contaminants tels que les Sta
aureus.

Résistance aux roulettes
Pendant 25,000 cycles de 3 roues portant 66lbs. Aucune ma

Affaiblissement acoustique: 6dB

COMPOSITION
Le revêtement de plancher homogène Marmoleum est fait d
naturels comme l'huile de lin, la farine de bois, des agglom
résine et des pigments secs mélangés et pressés sur une ba

CARACTÉRISTIQUES PHYSIQUES
(les dimensions sont approximatives)
Largeur.....79 pouces
Longueur ..... 105 pieds linéaires
Calibre 1/1
Base.....
Dimensions du rouleau .....77 verges carrées (64 me

SERVICES TECHNIQUES
Pour plus de détails sur les caractéristiques, l'installation, l
et les instructions d'entretien initial du produit, ainsi que su
contactez les Services de soutien de Linoléum Forbo au 1-80

Linoléum homogène
En conformité avec les normes européennes (EN 548 et EN 6
L'Marmoleum sont manufacturés à base d'un mélange de mat
Ce mélange est ensuite appliqué en deux couch es sur une ba
Les avantages de ce procédé sont les suivants:
- La première couche égalise la base de jute et empêche l
irrégularité de la fibre naturelle d'apparaître dans la cou
supérieure du revête ment assurant ainsi une surface lis
- Suivant ce procédé, le produit final est un revêtement d
compact qui offre une résistance beaucoup plus grande
empreintes et une performance accrue lorsque soumis
charges mécaniques (par ex.: test de résistance aux roul

Pellicule de séchage
Durant la dernière phase du procédé de production, une pel
jaunâtre, appelée pellicule de séchage peut apparaître sur l
de sol. Ce phénomène est plus visible sur les teintes plus pâ
paraît rapidement lorsque le produit est exposé à la lumière

COLOR # 3855.

Forbo Linoleum
P.O. Box 667
2 Maplewood Drive
Humboldt Industrial Park
Hazleton, PA 18201
Telephone: 1-800-842-7839
570-459-0771
Fax: 570-450-0258
E-mail: info@fL-NA.com
www.forboLinoleumNA.com

KUDLIK CONSTRUCTION LTD
P.O. BOX 727, 1519 FEDERAL ROAD
IQUALUIT, NUNAVUT X0A 0H0
PHONE: (867) 979-1166
FAX: (867) 979-1169

REVIEWED
REVIEWED AS NOTED
RESUBMIT
31/08/2005
DATE 6 Sept 05
SIGNATURE

forbo

creating better environments

ADHESIVE
FORBO 414 LINOTACK®

PRODUCT ADVANTAGES

- Low percentage of solvents
- Non-flammable
- Easy and safe to apply
- Good moisture resistance
- High initial tack
- Favourable spreading
- Roller-castor chair resistant

KUDLIK CONSTRUCTION LTD
P.O. BOX 727, 1519 FEDERAL ROAD
IQUALUIT, NUNAVUT X0A 0H0
PHONE: (867) 979-1160
FAX: (867) 979-...

APPLICATION

For installing:

- Linoleum in sheets and tiles.

TECHNICAL FACTS

Basis	Acrylic dispersion
Colour	Beige
Consistency	Thick liquid
Density	1.3kg/ltr
Tools	Toothed spreader (Richards #15)
Consumption	400-450 g/ m²
Minimum open time	0-5• minutes *
Maximum open time	15-20 minutes *
Drying time	Approx. 24 hours *
Storage	Store free from frost. Protect from high temperatures
Shelf life	12 months in unopened bucket
Danger class	None
Safety Data Sheet	Available upon request

**The times mentioned have been determined in our laboratory and must be considered as guide-lines in view of the wide variety of compositions climatic circumstances and subfloor*

SUBFLOOR

- Forbo 414 LINOTACK is suitable for any type of subfloor that is smooth, clean, permanently dry and sound, according to the requirements of BS 3203 or DIN 18 365.
- if in doubt about the application please consult Forbo Technical Services

DIRECTION FOR USE

- Apply the adhesive with a regular toothed spreader (Richards #15)
- On porous subfloor the linoleum may be placed immediately into the wet adhesive.
- Subfloors of low porosity a waiting time of approx. 10 minutes is applicable.
- Roll the linoleum well. Sheet ends and seams are to be pressed firmly.
- On subfloor of low porosity rolling and pressing with 150 lbs roller is to be repeated after approx. 15 minutes (depending on temperature and relative humidity of the air).
- Remove any spilled adhesive immediately with water.

UNDERFLOOR HEATING

Forbo 414 LINOTACK can be applied over the underfloor heating systems. Turn off heater 24 hours before application. Do not heat again until at least 24 hours after installation and in steps of 5°C per day.

PACKAGING

Available in 15 litres. Buckets

Our directions for use are based on careful tests carried out in the laboratory and in actual practice. However, we cannot take responsibility for executed work and therefore we advise that site tests be conducted prior to installation of linoleum.

FORBO LINOLEUM INC.
8296 Pascal Gagnon, Montréal Québec, H1P 1Y4, TEL +514-990-9700, FAX +514-327-8589, COURIEL / EMAIL: info@fl-NA.com

KUDLIK CONSTRUCTION LTD
P.O. BOX 727, 1519 FEDERAL ROAD
IQUALUIT, NUNAVUT X0A 0H0
PHONE: (867) 979-1166
FAX: (867) 979-1169

MAPEI®

PRP 110

PLANI/PATCH

Fast-Setting, Cement Based Patching Compound

DESCRIPTION

A fast-setting, latex-modified, cement based patching compound which, when mixed only with water, is used for fully cured concrete and exterior grade underlayment qualities prior to the installation of a floor covering. Floor covering can be installed in just 1 1/2 hours after application with no additional underlayment necessary.

USES

1. For interior use only.
2. For patching and filling cracks, holes, voids, and depressions in concrete and exterior grade underlayment prior to the installation of carpet, resilient flooring, wood parquet floors, ceramic tiles, slate, marble, granite, and stone veneer floors.
3. For repairing subfloors from featheredge to 1/2" (12 mm) thicknesses. If needed, PLANI/PATCH can be applied in two layers to exceed thicknesses greater than 1/2" (12 mm).
4. Offers a compatible bond with all resilient or ceramic tile adhesives, dry-set mortars, epoxies, and polyurethane adhesives when these materials are subsequently used for the installation of floor covering materials.
5. For high compressive strengths. Resists wheel chair traffic when covered with floor covering.

LIMITATIONS

1. Do not apply over presswood, flake board, metal or similar type substrates. Follow the floor covering manufacturer's recommendations regarding proper underlayment qualities.
2. Do not apply directly over gypsum floor patching compounds or lightweight concrete.
3. Do not use as a concrete resurfacing material when concrete surface is to be left exposed or unprotected.
4. Do not use for leveling large surfaces. Use ULTRA/PLAN or ULTRA/PLAN MB self-leveling underlayments. *(See data sheet for details.)*
5. Do not use at temperatures below 40°F (4°C) or above 95°F (35°C).

RECOMMENDED SUBSTRATES

- Fully cured concrete (at least 28 days old)
- Exterior grade plywood, Group 1 CC type or similar performing underlayment qualities

SETTING INSTRUCTIONS

1. **Surface preparation**
   - 1.1 **General**
     - 1.1.1 All substrates must be structurally sound, solid, dry, clean and free from dust, oil, grease, tar, paint, wax, curing agents, sealers, release agents or any deleterious substances which may act as bond barriers.
     - 1.1.2 Painted surfaces must be sanded and scarified completely to expose the substrate.
   - 1.2 **Concrete**
     - 1.2.1 Concrete subfloors must be at least 28 days old and completely cured.
     - 1.2.2 Neutralize any trace of strong acid or alkali from the substrate prior to application.
     - 1.2.3 No primer or special bond coat required.
   - 1.3 **Plywood**
     - 1.3.1 All wooden floors shall be well ventilated from below.
     - 1.3.2 No primer or special bond coat is required.
2. Mixing
   - 2.1 In a clean mixing container, pour in 4 qts. (3,7 L) water per 25 lbs. (11,3 kg) powder and 1.5 qts. (1,4 L) water per 10 lbs. (4,5 kg) powder and gradually add the PLANI/PATCH powder while slowly mixing.

     Note: If longer pot life is required, mix diluted PLANI/PATCH PLUS instead of water to PLANI/PATCH *(see PLANI/PATCH data sheet)*.
   - 2.2 Some settling may occur during transportation. Dry mix the entire contents of the bag prior to mixing small batches with water.
   - 2.3 Using a low speed mixer (approx. 300 RPM) mix thoroughly to a smooth, lump-free consistency. Do not slake (let sit in container).
   - 2.4 Avoid air entrapment and prolonged mixing which will shorten pot life.
   - 2.5 Do not mix more material than can be finished within 8-10 minutes.
   - 2.6 Do not slake (let sit in container). Spread paste onto the floor surface as quickly as possible after mixing.
   - 2.7 Do not overwater.
   - 2.8 Wash hands and tools with water immediately after mixing.
3. Application
   - 3.1 Use a flat edge steel trowel. Finish the surface to the required smoothness.
   - 3.2 Protect from excessive heat or drafty conditions during curing period.
   - 3.3 Wash hands and tools with water while material is still fresh.
4. **Expansion joints**
   - 4.1 Protect existing expansion and control joints. Do not fill or cover with patching compound.

Thickness Recommendations

PLANI/PATCH mixed with PLANI/PATCH PLUS:

REFERENCES			
There are no national standards covering patching compounds for substrate preparation.			
TECHNICAL DATA			
Pot life at 72°F (22°C)		8-10 minutes	
Final set at 72°F (22°C)		Approximately 30-40 mins.	
Drying time required before installation of floor covering		60-90 minutes or once the material is completely dry.	
Bond strength (28 days) over concrete		406 psi (2.8 MPa)	
Compressive strength (ASTM C-109)	6 hours 28 days	1400 psi (9 MPa) 4564 psi (32 MPa)	
Shrinkage factor (28 days)		None	
Specific gravity (powder)		1.25 g/cm3	
Specific gravity (paste)		1.78 g/cm3	
pH (paste)		12	
Cleanability		With water while fresh	
PACKAGING			
4.4 lb. (2 kg) box			
10 lb. (4,5 kg) box			
25 lb. (11,3 kg) bag			
40 lb. (18,1 kg) pail			
SHELF LIFE			
12 months when stored in original container at room temperature in a dry, heated area.			
COLOR			
Gray			
HEALTH AND SAFETY			
Consult the material safety data sheet before using this product.			
APPROXIMATE COVERAGES			
	Thickness		
	1/16" (1,5mm)	1/8" (3mm)	1/4" (6mm)
10 lb. (4,5 kg)	18-22 sq. ft. (1,6 - 1,8 m²)	8-10 sq. ft. (0,8 - 0,9 m²)	4-6 sq. ft. (0,4 - 0,6 m²)
25 lb. (11,3 kg)	45-55 sq. ft. (3,7 - 4,6 m²)	20-25 sq. ft. (1,9 - 2,3 m²)	10-13 sq. ft. (0,9 - 1,2 m²)
NOTE			
Coverages shown are approximate and are given for estimating purposes only. Actual coverages may vary depending on the roughness of the substrate, method of application and use.			

Full Strength Mixture:
Up to 1/16" (15mm)

Diluted Mixture:
Up to 1/4" (6mm)
(3 parts water/1 part PLUS)

PLANI/PATCH mixed with water:
Up to 1/2" (13mm)

5. Protection
General

5.1 Provide for dry heated storage on site and deliver all materials at least 24 hours before work begins.

5.2 Protect from traffic, dirt or dust from other trades until final installation of floor covering.

5.3 Do not apply any adhesive or floor covering material before PLANI/PATCH is completely dry.

5.4 Protect from excessive heat and drafty conditions while curing.

5.5 PLANI/PATCH must be covered over with a floor covering material.

NOTICE: *We shall not be liable for incidental and consequential damages, directly or indirectly sustained, nor for any loss caused by application of these goods not in accordance with current printed instructions or for other than the intended use. Before using, user shall determine the suitability of the product for its intended use and user alone assumes all risks and liability whatsoever in connection therewith. Our liability is expressly limited to replacement of defective goods. Any claim shall be deemed waived unless made in writing to us within thirty (30) days from date it was, or reasonably should have been, discovered.*

MAPEI

NORTH AMERICAN HEADQUARTERS
1501 Wall Street
Garland, TX 75041-4046
Phone: (972) 271-9500
Fax: (972) 271-9464

CUSTOMER SERVICE
1-800-42-MAPEI

TECHNICAL SERVICE
1-800-992-6273 (U.S. and Puerto Rico)
1-800-361-9309 (Canada)

UNITED STATES
Arizona
401 South Smith Road
Tempe, AZ 85281-2925
Phone: (602) 968-7722
Fax: (602) 966-9659

California
1900 East Wright Circle
Anaheim, CA 92806-6028
Phone: (714) 385-0155
Fax: (714) 978-0614

Florida
1851 N.W. 22nd Street
Ft. Lauderdale, FL 33311-2940
Phone: (954) 485-8575
Fax: (954) 485-9081

Illinois
530 Industrial Drive
West Chicago, IL 60185-1823
Phone: (630) 293-5800
Fax: (630) 293-5079

New Jersey
4980 Bordentown Avenue
Old Bridge, NJ 08857-9704
Phone: (908) 254-4830
Fax: (908) 254-2693

Virginia
300 Nelms Circle
Fredericksburg, VA 22406
Phone: (540) 310-0111
Fax: (540) 310-4887

CANADA
Québec
2900 Francis-Hughes Avenue
Laval, QC H7L 3J5
Phone: (514) 662-1212
Fax: (514) 662-0444

British Columbia
831 Cliveden Avenue
New Westminster, BC V3M 5R6
Phone: (604) 521-1843
Fax: (604) 521-6291

Ontario
351 Hanlan Road, Units 7 to 11
Vaughan, ON L4L 3T1
Phone: (905) 856-7774
Fax: (905) 856-7874

PUERTO RICO
451 Ave. Fernandez Juncos
San Juan, Puerto Rico 00901
Phone: (787) 722-7225
Fax: (787) 722-4505

VENEZUELA
1ª Ave. entre 4ª y 5ª transversal
No. 1-25 Urbanizacion Montecristo
1071 Caracas, Venezuela
Phone: (58-2) 237-1669
Fax: (58-2) 237-3284

® Registered Trademark
Printed in U.S.A.
4/97

Form # DSPP497
Supercedes all previous publications on PLANI/PATCH

MAPEI®

Planipatch Plus

High-performance additive for *Planipatch*®

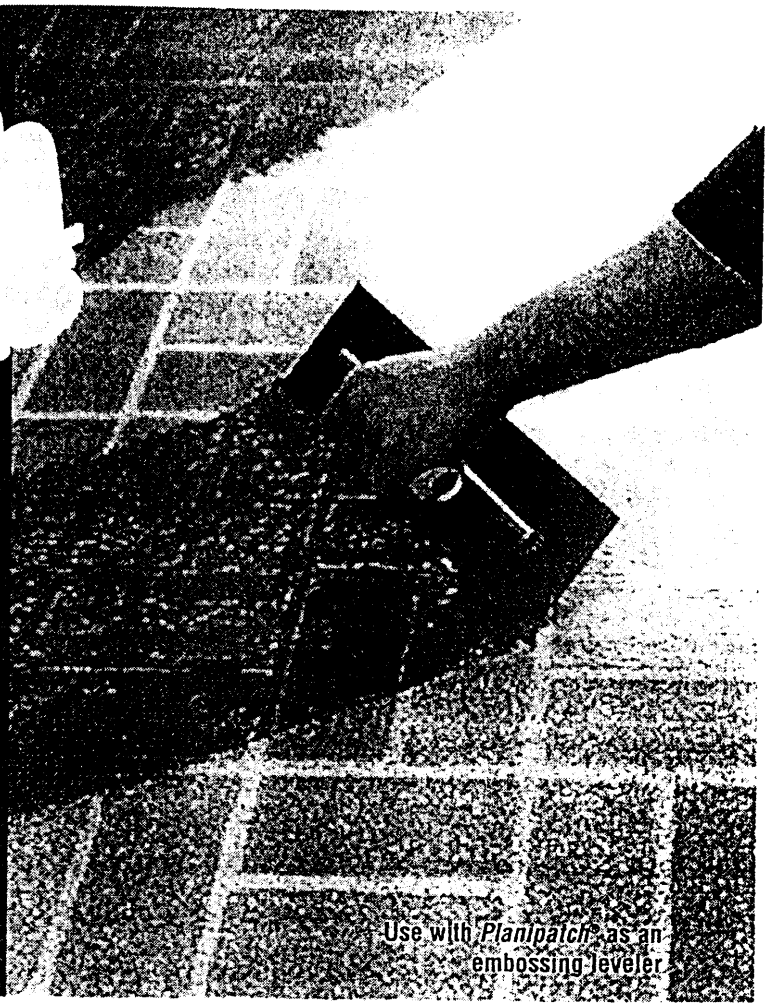

DESCRIPTION

Planipatch Plus is an acrylic latex additive for use with *Planipatch*.

USES

When *Planipatch* is mixed with *Planipatch Plus*, the *Planipatch Plus* System can be used as an embossing leveler or as a patch over properly prepared vinyl sheet goods, vinyl composition tile (VCT), cement terrazzo and residual cutback adhesive surfaces prior to the direct glue-down installation of floor coverings. Mix diluted *Planipatch Plus* (1 part additive to 3 parts water) with *Planipatch* for use in thin applications over porous and dry concrete.

RECOMMENDED SUBSTRATES

Full-strength *Planipatch Plus* mixed with *Planipatch*

- Properly prepared VCT, vinyl asbestos tile (VAT) and noncushioned sheet goods (vinyl or urethane wear layers) – see Section 5.1
- Properly prepared cement terrazzo
- Residual cutback adhesive – see Section 5.2
- Ceramic tile – see Section 5.3

Diluted *Planipatch Plus* (1 part of *Planipatch Plus* mixed with 3 parts of water) mixed with *Planipatch*

- Dry concrete
- Any wood underlayment that is recommended or guaranteed by either the wood manufacturer or the floor-covering manufacturer, such as exterior-grade plywood, Group 1, CC type

Note: Consult MAPEI's Technical Services Department for installation recommendations regarding substrates and conditions not described.

TECHNICAL NOTES

- For interior use only.
- Do not apply over presswood, flakeboard, metal or similar types of substrates. Follow the floor-covering manufacturer's recommendations regarding proper underlayment qualities.
- Do not apply directly over gypsum-based substrates.
- Do not use *Planipatch Plus* mixed with *Planipatch* as a wear layer.
- Do not use *Planipatch Plus* mixed with *Planipatch* for leveling large surfaces. Instead, use *Novoplan*® *2*, *Ultraplan*® *1* or *Ultraplan M20* self-leveling underlayments (see respective Technical Data Sheets for details).
- Do not use when the substrate temperature is below 50°F (10°C) or above 100°F (38°C).

KUDLIK CONSTRUCTION LTD
P.O. BOX 727, 1519 FEDERAL ROAD
IQUALUIT, NUNAVUT X0A 0H0
PHONE (867) 979-1163

Planipatch Plus

INSTRUCTIONS

1. Surface Preparation

1.1 All subfloors must be structurally sound, solid, well-fastened, dry, clean and free of dust, oil, grease, tar, paint, wax, curing agents, primers, sealers, loosely bonded toppings, loose particles and any substance that may prevent or reduce adhesion.

1.2 Painted surfaces must be sanded and scarified completely to expose the substrate, using appropriate safety precautions.

1.3 **Various underlayments**

1.3.1 Concrete subfloors must be dry.

1.3.2 Wooden floors must be well-ventilated from below.

1.3.3 Cement terrazzo must be sound, solid, flawless, stripped clean and free of any contaminants or conditions that may prevent or reduce adhesion. Roughen surface by sanding or scarifying using appropriate safety precautions.

1.4 See "Surface Preparation Requirements" document for details.

2. Mixing

2.1 **If a full-strength mixture** (up to 1/8" [3 mm] thickness) (embossing leveler, to patch over residual cutback adhesive surfaces)

2.1.1 Mix 3 parts of *Planipatch*® powder with 1 part of *Planipatch Plus* liquid.

2.2 **If a diluted mixture** (up to 1/4" [6 mm])

2.2.1 Dilute *Planipatch Plus* liquid using 1 part of *Planipatch Plus* with 3 parts of water. Then, mix 3 parts of *Planipatch* powder with 1 part of diluted *Planipatch Plus*. If a longer pot life is required, mix *Planipatch* with diluted *Planipatch Plus* instead of water.

2.3 Using a low-speed mixer (at 375 rpm maximum), mix thoroughly to a smooth, lump-free consistency. Do not mix more product than can be applied within 8 to 10 minutes.

2.4 Avoid air entrapment and prolonged mixing, which will shorten pot life.

3. Application

3.1 Immediately apply the mixture to the substrate using a flat-edge steel trowel, finishing the surface to the required smoothness.

3.2 Protect from excessive heat or drafty conditions during curing period.

3.3 Wash hands and tools with water while material is still fresh.

4. Expansion Joints

Respect existing expansion and control joints. Do not fill or cover with *Planipatch*.

5. Special Substrates

Refer to Section 2 for mixing ratios.

5.1 **Noncushioned vinyl tile and sheet goods (vinyl or urethane wear layers)**

5.1.1 Floor must be limited to one layer of existing flooring and be firmly bonded to substrate.

5.1.2 Remove any oils, grease, dirt, waxes or coatings with a stripping solution. Rinse with clean water and allow to dry. Important: Roughen surface of new floors or those with urethane wear layers to dull finish.

Caution: Do not completely remove the wear layer.

5.1.3 Fill embossed areas with *Planipatch* mixed with full-strength *Planipatch Plus*. Allow to dry (for approximately 60 minutes).

5.1.4 Apply a second application (at a minimum thickness of 1/32" [1 mm]) of *Planipatch* mixed with diluted *Planipatch Plus*. Allow to dry. The second coat fills any remaining smaller irregularities and creates a more porous substrate for water-based adhesives to perform properly.

5.2 **Cutback Adhesive Residue**

5.2.1 Remove ridges and loose cutback following appropriate guidelines.

5.2.2 Apply *Planipatch* mixed with full-strength *Planipatch Plus* in 1/16" (1,5 mm) thickness over residual cutback. Allow to dry.

Note: Cutback adhesive residue must be completely covered.

5.2.3 Apply a second application (at a minimum thickness of 1/32" [1 mm]) of *Planipatch* with diluted *Planipatch Plus*. Allow to dry (for approximately 60 minutes). The second application creates a more porous substrate for water-based adhesives to perform properly.

5.3 **Ceramic Tile**

5.3.1 Remove any coating or contamination from the surface of the tile and grout.

Note: To allow an adequate bond with glazed ceramic tile, abrade the surface using a belt sander set at a low speed.

5.3.2 Level the floor with *Planipatch* mixed with full-strength *Planipatch Plus* up to 1/16" (1,5 mm). Allow to dry.

TECHNICAL DATA (based on 73°F [23°C] and 50% relative humidity)

Pot life	40 to 50 minutes
Drying time required before floor-covering installation	55 to 60 minutes
Shelf life	12 months when stored in original container at 73°F (23°C) in a heated area. Protect from freezing.
Color	Milky white
Health and safety	Consult the Material Safety Data Sheet (MSDS) for safe-handling instructions.

Packaging

Jug: 1 U.S. gal. (3,79 L)

Pail: 5 U.S. gals. (18,9 L)

Approximate Coverage

The coverage of *Planipatch Plus*™ depends on its usage with *Planipatch*®. Please refer to the *Planipatch* Technical Data Sheet or product package for details.

5.3.3 Apply a second application (at a minimum thickness of 1/32" [1 mm]) of *Planipatch* mixed with diluted *Planipatch Plus* over the first application. Allow to dry. The second coat fills any remaining smaller irregularities and creates a more porous substrate for water-based adhesives to perform properly.

5.4 For information on other flooring surfaces, contact the MAPEI® Technical Services Department.

6. Cleaning

When fresh, *Planipatch Plus* mixed with *Planipatch* is easily removed from hands and tools with water. If allowed to set and harden, it can only be removed through mechanical abrasion.

7. Protection

7.1 Provide dry, heated storage on site and deliver all materials at least 24 hours before work begins.

7.2 Protect from traffic, dirt or dust caused by other trades until the floor covering's final installation.

7.3 Do not apply any adhesive or floor-covering material before *Planipatch* is completely dry.

NOTICE

Before using, user shall determine the suitability of the product for its intended use and user alone assumes all risks and liability whatsoever in connection therewith. Any claim shall be deemed waived unless made in writing to us within fifteen (15) days from date it was, or reasonably should have been, discovered.

MAPEI

Headquarters of the Americas

1144 East Newport Center Drive
Deerfield Beach, Florida 33442
Phone: (954) 246-8888
Fax: (954) 246-8800

Customer Service

1-800-42-MAPEI (1-800-426-2734)

Technical Services

1-800-992-6273 (U.S. and Puerto Rico)

1-800-361-9309 (Canada)

Additional Information

Website: www.mapei.com

MAPEI – USA

Ft. Lauderdale, Florida
Fredericksburg, Virginia
Garland, Texas
San Bernardino, California
South River, New Jersey
Tempe, Arizona
West Chicago, Illinois

MAPEI – Canada

Laval, Quebec
Delta, British Columbia
Brampton, Ontario

MAPEI – Argentina

Buenos Aires

MAPEI – Puerto Rico

Dorado

MAPEI – Venezuela

Caracas

For the most current product data, visit www.mapei.com.

MAPEI®

PR4135.PPF.C05Evp
© 2005 MAPEI Corporation. All Rights Reserved
Printed in the USA

RESILIENT WALL BASE

PRODUCT SPECIFICATIONS

---

1. PROPRIETARY PRODUCT/MANUFACTURER

1.1 Proprietary Product: Resilient Rubber and Vinyl Wall Base.

1.2 Manufacturer:

Johnsonite
16910 Munn Road
Chagrin Falls, Ohio 44023
Phone: (800) 899-8916
(440) 543-8916
Fax: (440) 543-8920

KUDLIK CONSTRUCTION LTD
P.O. BOX 727, 1519 FEDERAL ROAD
IQUALUIT, NUNAVUT X0A 0H0
PHONE: (867) 979-1186
FAX: (867) 979-1189

1.3 Proprietary Product Description:

1.3.1 Construction: Johnsonite Rubber Wall Base is manufactured from a proprietary thermoplastic rubber formulation designed specifically to meet the performance and dimensional requirements of ASTM F-1861, Type TP, Group 1 (solid) Standard Specification for Resilient Wall Base.

Johnsonite Vinyl Wall Base is formulated from a homogeneous polyvinyl chloride (PVC) composition combined with high quality additives and colorants designed specifically to meet the performance and dimensional requirements of ASTM F-1861, Type TV, Group 1 (solid) Standard Specification for Resilient Wall Base.

(Note: The General Services Administration cancelled Federal Specification #SS-W-40a in October of 1995 and replaced it with ASTM F-1861, Standard Specification for Resilient Wall Base.)

1.3.2 Physical Characteristics:

Traditional Wall Base:
.125" (3.17 mm) thickness.
2-1/2" (6.35 cm), 4" (10.16 cm), and 6" (15.24 cm) heights.
Straight (Toeless) and Coved (Toe) Profiles.
4' (1.22 m) straight and 120' (36.58 m) coiled lengths.
6" (15.24 cm) profiles packaged in 100' (30.48 m) lengths.
Inside and Outside Corners with 4" (10.16 cm) returns.

Rubber Wall Base:
.125" (3.17 mm) thickness.
4-1/4" (6.35 cm) height.
Straight (Toeless) and Angled (Toe) Profiles.
4' (1.22 m) straight and 120' (36.58 m) coiled lengths.
Inside and Outside Corners with 4" (10.16 cm) returns.

Vinyl Wall Base:

REVIEWED
REVIEWED AS NOTED
RESUBMIT
DATE

2-1/2" (6.35 cm), 4" (10.16 cm), and 6" (15.24 cm) heights.
Straight (Toeless) and Coved (Toe) Profiles.
4' (1.22 m) straight and 120' (36.58 m) coiled lengths.
6" x .125" profiles packaged in 100' (30.48 m) lengths.
Inside and Outside Corners with 4" (10.16 cm) returns.

2. PRODUCT PERFORMANCE AND TECHNICAL DATA

2.1 Hardness - ASTM D 2240: Rubber - 85 Shore A; Vinyl - 90 Shore A

2.2 Flexibility - Will not crack, break, or show any signs of fatigue when bent around a 1/4" (6.4 mm) diameter cylinder.

2.3 Meets or exceeds the performance requirements for resistance to heat/light aging, chemicals, and dimensional stability when tested to the methods, as described, in ASTM F-1861.

2.4 Fire Resistance:

2.4.1 - ASTM E 84/NFPA 255 (Steiner Tunnel Test) - Class C
2.4.2 - ASTM E 648/NFPA 253 (Critical Radiant Flux) - Class 1.
2.4.3 - ASTM E 662/NFPA 258 (Smoke Density) - 450 or less.

3. INSTALLATION

3.1 The installation of Johnsonite Rubber and Vinyl Wall Bases should not begin until the work of all other trades has been completed, especially overhead trades. Areas to receive wall base shall be clean, fully enclosed, weathertight,

and maintained at a uniform temperature of at least 65^0 F for 24 hours before,

during, and after the installation is completed. The wall base and adhesives shall be conditioned in the same manner. Coiled wall base shall be uncoiled and lay flat for at least 24 hours at 65^0 F prior to installation. Floors and walls shall be clean, dry, free of dust, all paints, wallpaper, and all other foreign material, which may effect proper adhesive bonding. Wall Base may be installed on interior plaster, gypsum wallboard, concrete, masonry, mineral-reinforced cement board or similar porous surfaces. Wall Base shall not be installed on surfaces that will be exposed to drastic temperature changes or moisture.

3.2 Adhesives:

Porous Surfaces:
Johnsonite #960 Acrylic Cove Base Adhesive.
Application - 1/8" square notch trowel.
Coverage - approximately 250 linear feet of 4" Wall Base.

Non-porous Surfaces:
Johnsonite #945 Contact Bond Adhesive.
Application - Brush or roller.
Coverage - approximately 360 sq. ft./gallon.

3.3 Installation Manual: Refer to Johnsonite Wall Base Installation Instructions for complete installation details.

4. AVAILABILITY AND COST

4.1 Available through authorized Johnsonite distributors nationwide.

5. WARRANTY

5.1 Limited 1 year warranty. For complete details, contact Johnsonite or an authorized Johnsonite distributor.

6. MAINTENANCE

6.1 Refer to Johnsonite Wall Base Installation Instructions for complete maintenance details.

7. TECHNICAL SERVICES

7.1 **Samples:** Submittal samples for verification and approval available upon request from Johnsonite, Customer Service. Samples shall be submitted in compliance with the requirements of the Contract Documents. Accepted and approved samples shall constitute the standard materials which represent materials installed on the project.

7.2 For current Installation and Maintenance Instructions, Architect Specifications, Product Specifications, and other technical data, contact Johnsonite Customer Service at 1-800-899-8916.

Revision 5, Released January, 2001

JohnsonDiversey

FICHE DE DONNÉES DE SÉCURITÉ

TASKI VISION STAR Fini pour plancer à haute teneur en solides

HMIS		NFPA	Equipement de protection individuelle
Santé	1	1	None Required
Risque d'incendie	0	0	
Réactivité	0	0	

Numéro de révision: 1

Date de révision: 2005-02-16

1. IDENTIFICATION DE LA SUBSTANCE/PREPARATION ET DE LA SOCIETE/ENTREPRISE

Nom du produit: TASKI VISION STAR Fini pour plancer à haute teneur en solides

MSDS #: F-00339002
Code du produit: 3096239, 3096247, 3096255, 3671184
Utilisation recommandée: Entretien des planchers.

Producteur, importateur, fournisseur:

US Headquarters
JohnsonDiversey, Inc.
8310 16th St.
Sturtevant, Wisconsin 53177-0902
Phone: 1-888-352-2249
MSDS Internet Address:
www.johnsondiversey.com

Canadian Headquarters
JohnsonDiversey - Canada, Inc.
2401 Bristol Circle
Oakville, Ontario L6H 6P1
Phone: 1-800-668-3131

NUNALIK CONSTRUCTION LTD
P.O. BOX 727, 1519 FEDERAL ROAD
IQUALUIT, NUNAVUT X0A 0H0
PHONE: (867) 979-1126
FAX: (867) 979-1159

Téléphone en cas d'urgence: 1-800-851-7145 (Prosar); 1-651-917-6133 (Int'l Prosar); 01-800-710-3400 (México)

2. IDENTIFICATION DES DANGERS

Aperçu des premiers secours
ATTENTION. PEUT IRRITER MODÉREMENT LES YEUX. Irritation légère de la peau.

Principales voies entree: Yeux. Peau. Inhalation.
Contact avec la peau: Peut irriter modérément la peau.
Contact avec les yeux: Peut irriter modérément les yeux.
Inhalation: Aucune
Ingestion: Aucune

3. COMPOSITION/INFORMATION SUR LES COMPOSANTS

Composants Dangereux

Composants	N° CAS	% en poids	DL50 Orale	DL50 Cutanée	CL50 Inhalatoire
Ether de diéthylèneglycol et de monoéthyle	111-90-0	5 - 10%	6.5 ml/kg (rat)	4.2 mL/kg (rabbit)	5.24 g/m³ (rat)

4. PREMIERS SECOURS

Contact avec les yeux: Rincer immédiatement à grande eau . En cas d'irritation, consulter un médecin .
Contact avec la peau: Rincer immédiatement à grande eau . En cas d'irritation, consulter un médecin .
Conditions médicales aggravées: Les personnes présentant des difficultés de la cutané préexistantes peut être plus susceptible aux effets irritants

5. MESURES DE LUTTE CONTRE L'INCENDIE

Moyens d'extinction appropriés: Non applicable
Dangers spécifiques: Non applicable
Risques inhabituels Aucun à notre connaissance
Méthodes particulières d'intervention: Aucune méthodes spéciale n'est requise

Equipements spéciaux pour la protection des intervenants: Comme pour tout incendie, porter un respirateur à air comprimé, MSHA/NIOSH (approuvé ou équivalent), ainsi qu'une combinaison complète de protection
Moyen d'extinction à ne pas utiliser pour des raisons de sécurité: Pas d'information disponible.

6. MESURES A PRENDRE EN CAS DE DEVERSEMENT ACCIDENTEL

Précautions individuelles: Utiliser un équipement de protection individuel
Méthodes de nettoyage: Pas d'information disponible.

7. MANIPULATION ET STOCKAGE

Manipulation:
Eviter le contact avec la peau et les yeux. POUR UTILISATOIN COMMERCIALE ET INDUSTRIELLE SEULEMENT .
Stockage:
Protéger du gel . Conserver hermétiquement fermé dans un endroit sec, frais et bien ventilé.

8. MESURES DE CONTRÔLE DE L'EXPOSITION/PROTECTION INDIVIDUELLE

Mesures d'ordre technique:
Aucune ventilation particulière requise . Ventilation adéquate du local .

Equipement de protection individuelle

Protection des yeux:	Aucune condition particulière dans les conditions normales d'utilisation
Protection des mains:	Aucune condition particulière dans les conditions normales d'utilisation
Protection de la peau et du corps:	Aucune condition particulière dans les conditions normales d'utilisation
Protection respiratoire:	Aucune condition particulière dans les conditions normales d'utilisation
Mesures d'hygiène:	A manipuler conformément aux bonnes pratiques d'hygiène industrielle et aux consignes de sécurité

9. PROPRIETES PHYSIQUES ET CHIMIQUES

État physique: Liquide
Couleur: Blanc
Odeur: Douce De solvant
Densité: 1.03
Dilution pH: Pas d'information disponible
Masse volumique apparente: Pas d'information disponible
Densité gazeuse: Pas d'information disponible
Vitesse d'évaporation: Pas d'information disponible
Solubilité dans d'autres solvants: Pas d'information disponible

Aspect: Émulsion
Point/intervalle d'ébullition: indéterminé
Point/intervalle de fusion: indéterminé
pH: 8.4
Densité: 8.63
Température de décomposition: indéterminé

Température d'auto-inflammabilité: Pas d'information disponible
Solubilité: dispersable

Teneur (%) en COV (composés organiques volatils): 6.2
Point d'éclair: >200 (°F)>93.3 (°C)

Viscosité: Pas d'information disponible
Coefficient de partage (n-octanol/eau): Pas d'information disponible

10. STABILITE ET REACTIVITE

Stabilité: Le produit est stable
polymérisation: Une polymérisation dangereuse ne se produit pas
Produits de décomposition dangereux: Aucun raisonnablement prévisible

11. INFORMATIONS TOXICOLOGIQUES

Toxicité aiguë ORALE , Estimée à un niveau supérieur à 5000 mg/kg. , Dermal, Toxicité orale exprimée en DL50 > 2000 mg/kg .
Information sur les composants: Voir la Section 3
Toxicité chronique: Inconnu

Effets spécifiques

effets cancérogènes:	Aucun connu
effets mutagènes:	Aucun connu
Toxicité reproductrice:	Aucun connu
Effets sur l'organe-cible:	Aucun connu

Composants Dangereux

12. INFORMATIONS ECOLOGIQUES

Information environnementales donnée non disponible.

13. CONSIDERATIONS RELATIVES A L'ELIMINATION

Déchets de résidus / produits non utilisés:
Éliminer selon les dispositions prévues par les différentes réglementations fédérales, provinciales, locales ou d'État

14: INFORMATIONS RELATIVES AU TRANSPORT

DOT/TDG: S' il vous plaît, consulter le document d'expédition pour les renseignements à jour sur le transport

15: INFORMATIONS RÉGLEMENTAIRES

Inventaires internationaux
Tous les éléments de ce produit sont énumérés dans les inventaires suivants: États-Unis (TSCA), Canada (DSL/NDSL).

Réglementation des É.-U.
Proposition 65 de la Californie: Ils n'y a pas des ingrédients qui sont assujettis à la déclaration en suivant 'Proposition 65' de Californie

LOI DU DROIT DE SAVOIR DE L'ÉTAT

Composants	N° CAS	MARTK:	NJRTK:	PARTK:	RIRTK:	ILRTK:	CTRTK:
Eau	7732-18-5	-	-	-	-	-	-
Ether de diéthylèneglycol et de monoéthyle	111-90-0	-	Listed	Listed	-	-	-
Tributoxyéthyl-phosphate	78-51-3	-	Listed	Listed	-	-	-
diisobutyrate de 2,2,4-triméthylpentane-1,3-diol	6846-50-0	-	-	-	-	-	-
Styrene-acrylic polymer	Not est.	-	-	-	-	-	-

CERCLA / SARA

Composants	N° CAS	% en poids	CERCLA/SARA RQ (lbs)	Section 302 TPQ (lbs)	Section 313
Ether de diéthylèneglycol et de monoéthyle	111-90-0	5 - 10%			Listed.
Tributoxyéthyl-phosphate	78-51-3	1 - 5%			Listed.

Composants	CAA HAP	CAA ODS	CWA Polluants en Priorité
Ether de diéthylèneglycol et de monoéthyle	Listed.		
Tributoxyéthyl-phosphate	Listed.		

Canada
WHMIS: Non controlé.

16: AUTRES INFORMATIONS

Cause de la révision: non applicable
Préparé par: NAPRAC
Conseils supplémentaires: Aucune

Avis au lecteur: Ce document a été préparé de sources considérées techniquement sérieuses. Il ne constitue pas une garantie, énoncée ou tacite, de l'exactitude des renseignements ci-incluses. Les conditions actuelles d'usage et de manutention sont hors du contrôle du vendeur. L'utilisateur doit s'assurer qu'il possède toutes les données en cours, en regard de son utilisation particulière et qu'il respecte tous les règlements fédéraux, des états, provinciaux et municipaux.

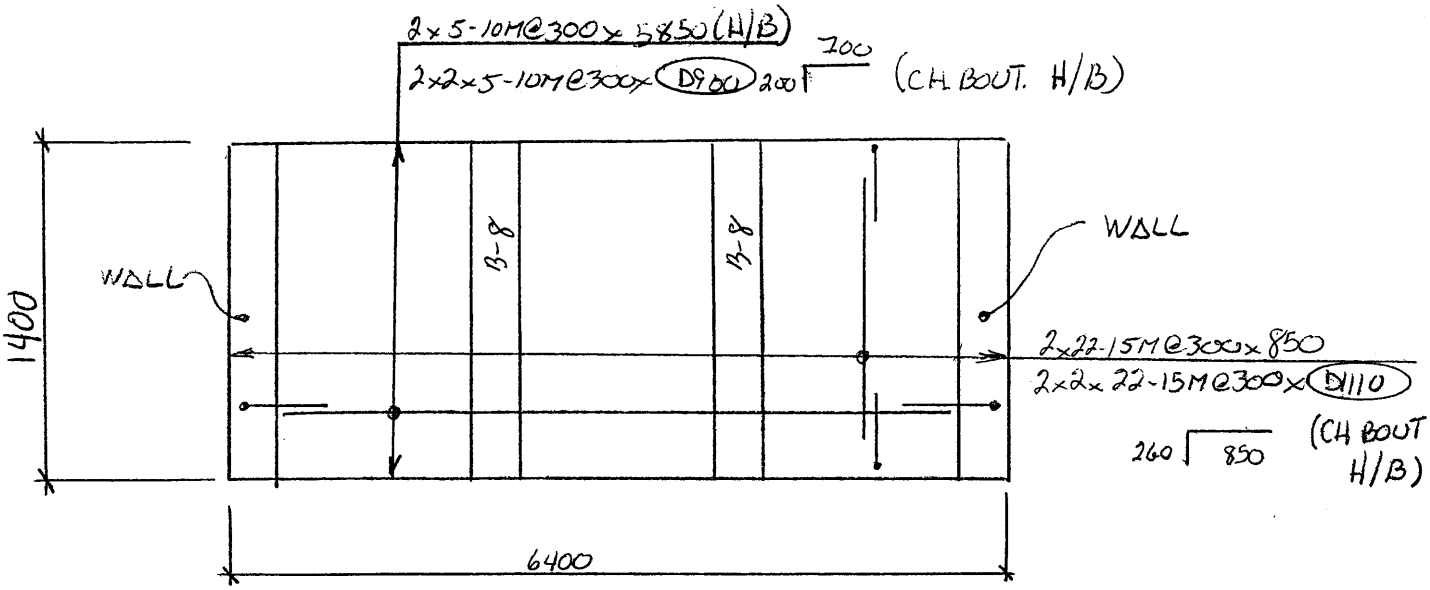

DALLE NIV. 11700

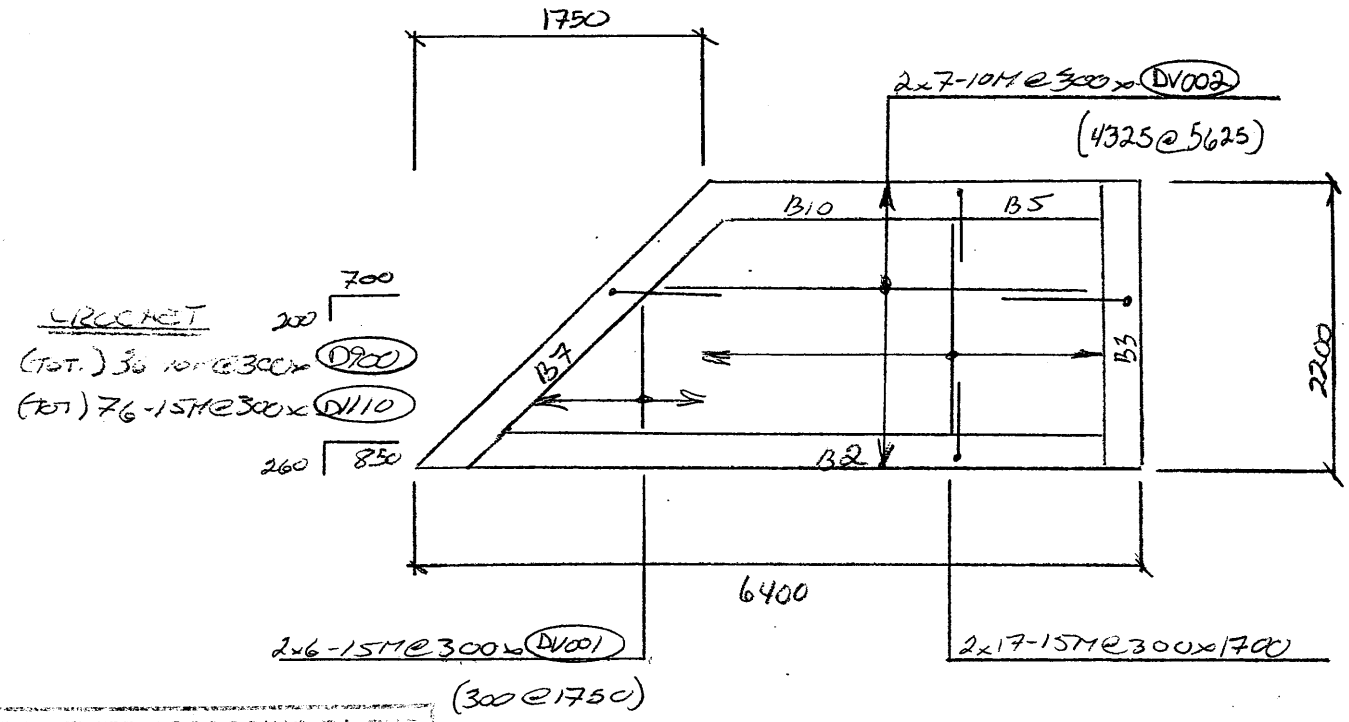

DALLE NIV. 12464

REVIEWED ACCORDING TO THE REQUIREMENTS OF THE GENERAL CONDITIONS OF THE CONTRACT. ANY NOTION INDICATED IS SUBJECT TO THESE REQUIREMENTS.

☑ NO EXCEPTIONS TAKEN

☐ MAKE NOTED CORRECTIONS

REVISE & RESUBMIT

☐ REJECTED

DATE JUN 27 2005 BY NV

EARTH TECH (CANADA) INC.

KUDLIK CONSTRUCTION LTD
P.O. BOX 727, 1519 FEDERAL ROAD
IQUALUIT, NUNAVUT X0A 0H0
PHONE: (867) 979-1166
FAX: (867) 979-1169

ACIER ECAN
(Division de Acier AGF Inc.)
595, avenue Newton
Québec (Québec)
G1P 4C4
TÉL.: (418) 877-7715
FAX : (418) 877-9596

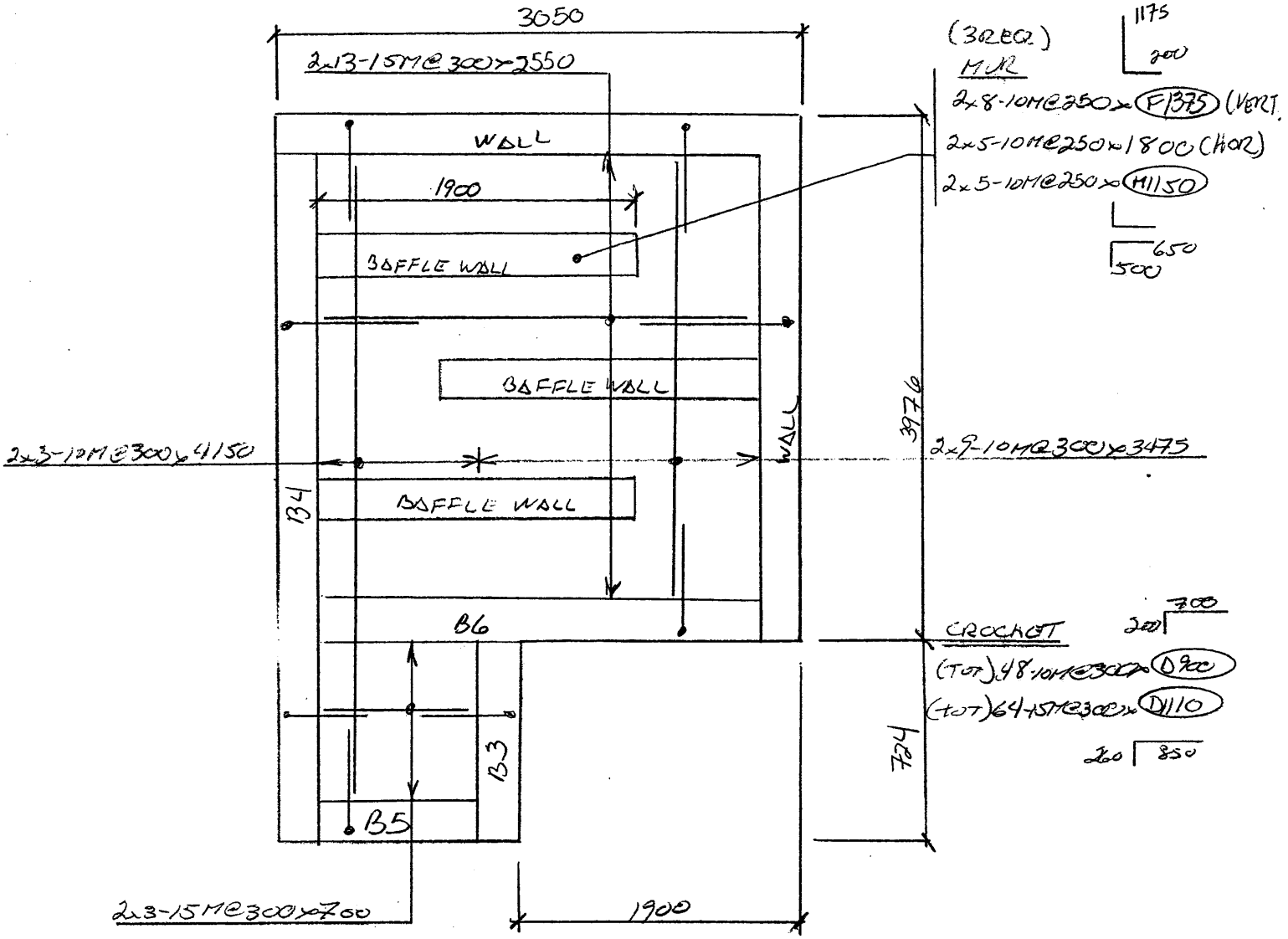

DALLE NIV. 12750

REVIEWED ACCORDING TO THE REQUIREMENTS OF THE GENERAL CONDITIONS OF THE CONTRACT. ANY ACTION INDICATED IS SUBJECT TO THESE REQUIREMENTS.

☑ NO EXCEPTIONS TAKEN
☐ MAKE NOTED CORRECTIONS
☐ REVISE & RESUBMIT
☐ REJECTED

DATE JUN 27 2005 BY NV

EARTH TECH (CANADA) INC.

KUDLIK CONSTRUCTION LTD
P.O. BOX 727, 1519 FEDERAL ROAD
IQUALUIT, NUNAVUT X0A 0H0
PHONE: (867) 979-1166
FAX: (867) 979-1169

ACIER ECAN
(Division de Acier AGF Inc.)
595, avenue Newton
Québec (Québec)
G1P 4C4
TÉL.: (418) 877-7715
FAX : (418) 877-9596

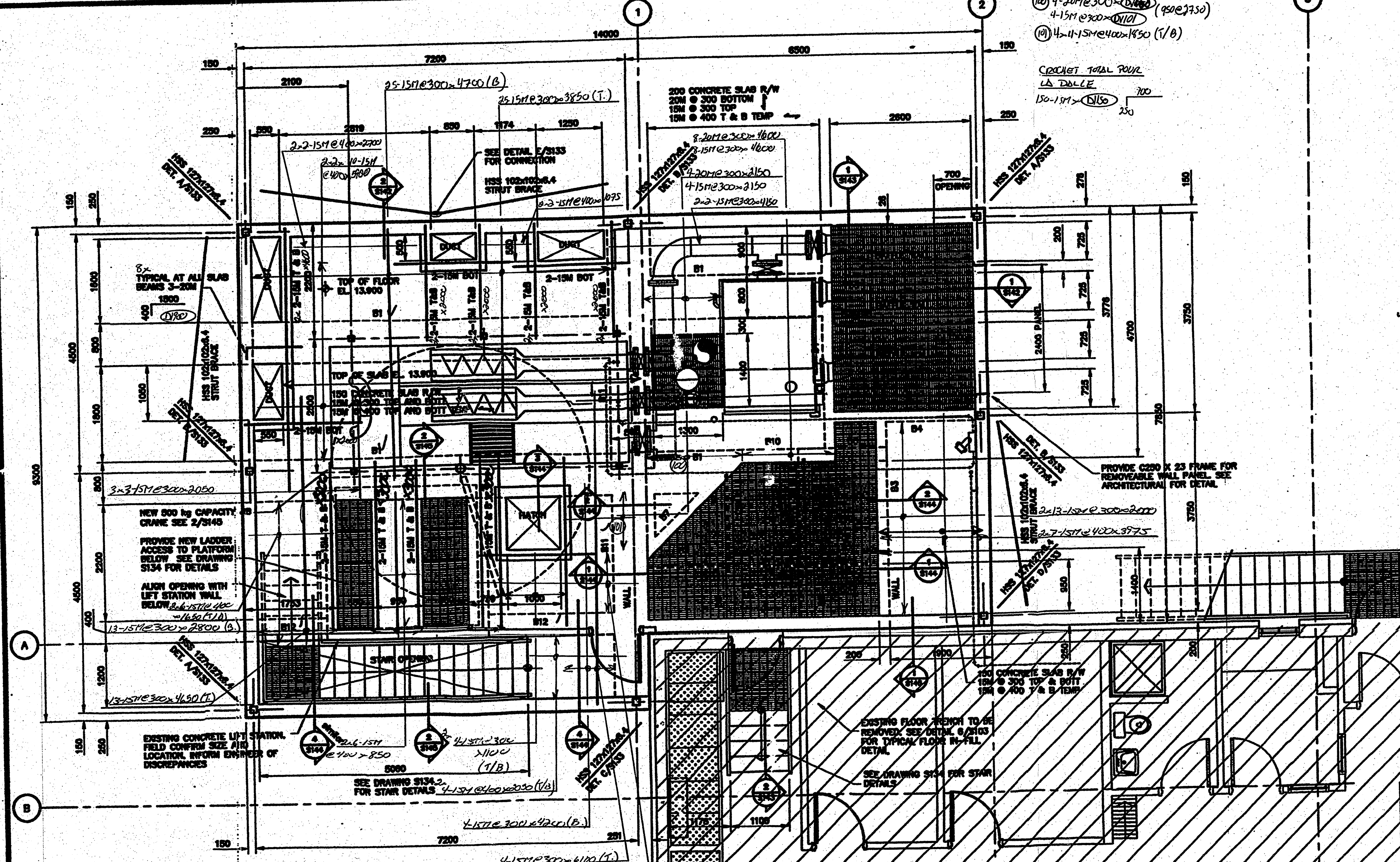

TOP OF SLAB EL. 13.900
SLAB REINFORCING PLAN
1:50

BEAM SCHEDULE							
TYPE	WIDTH	DEPTH	REINFORCING TOP	MID.	BOT.	STIRRUPS	REMARKS
B1	600	500	6-25M	–	6-25M	10M @ 300	
B2	200	1950	2-20M	10M @ 250	2-20M	10M @ 300	
B3	200	1400/1830	2-25M	10M @ 250	2-25M	10M @ 300	
B4	200	1400	2-25M	10M @ 250	2-25M	10M @ 300	
B5	250	1100	2-20M	10M @ 250	2-20M	10M @ 300	
B6	200	900	2-20M	10M @ 250	2-20M	10M @ 300	
B7	200	2450	2-20M	10M @ 250	2-20M	10M @ 300	
B8	200	2450	2-20M	10M @ 250	2-20M	10M @ 300	
B9	200	200	–	–	–	–	C130 X 10
B10	250	1830	2-25M	10M @ 250	2-25M	10M @ 300	
B11	600	500	6-25M	–	6-25M	10M @ 250	
B12	400	500	4-20M	–	6-25M	10M @ 300	

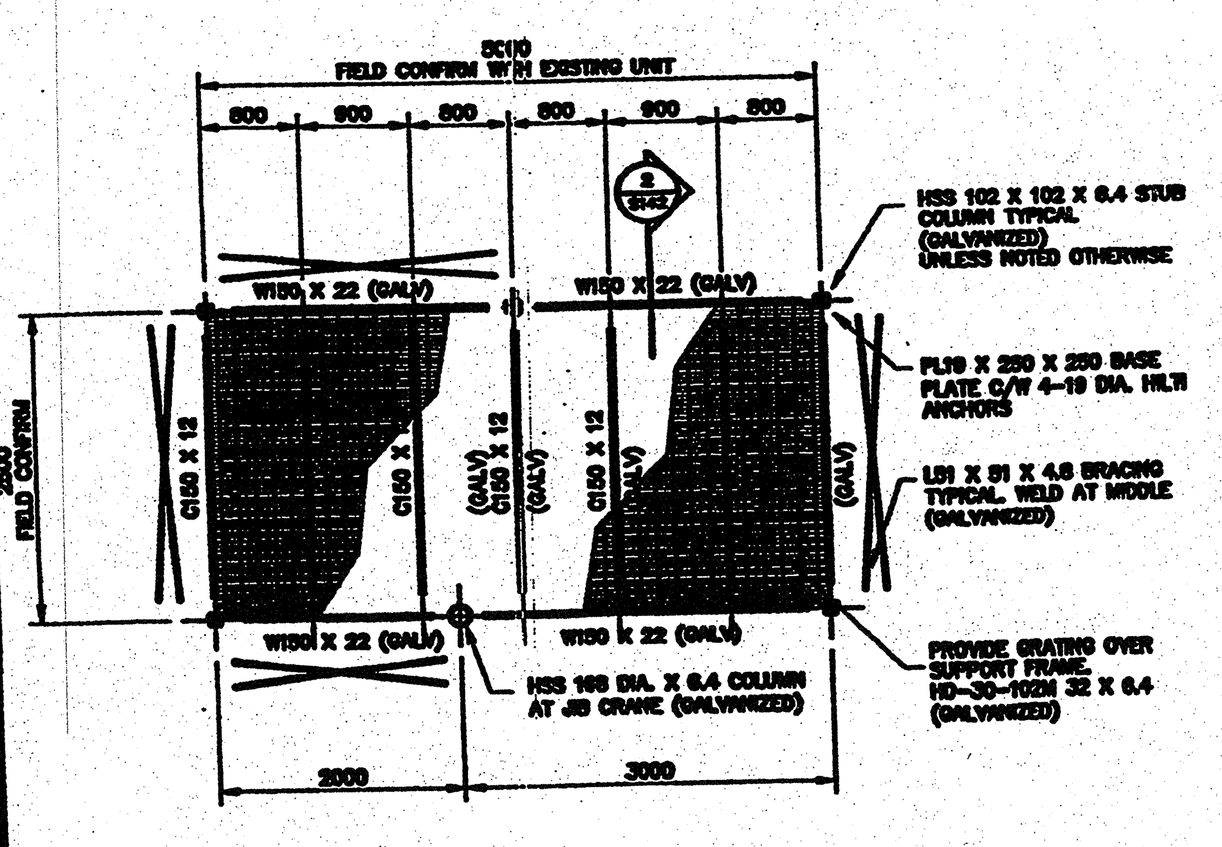

AUGER SUPPRT FRAME PLAN
1:50

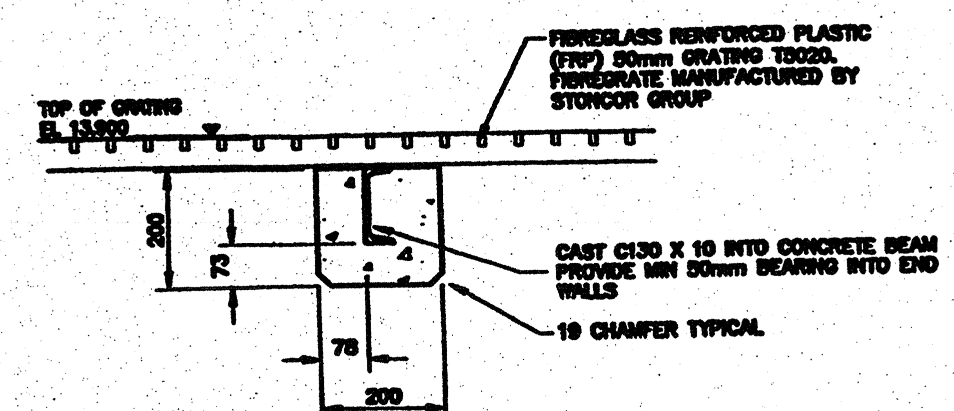

A DETAIL S142 1:10

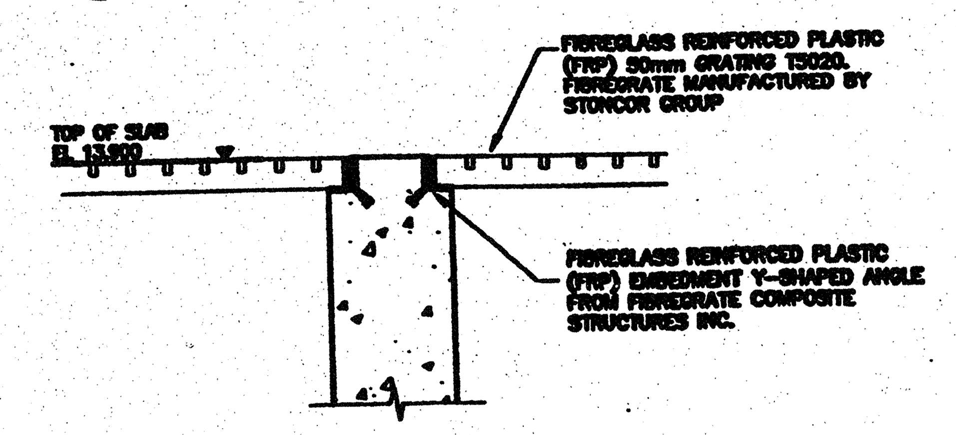

B DETAIL S142 1:10

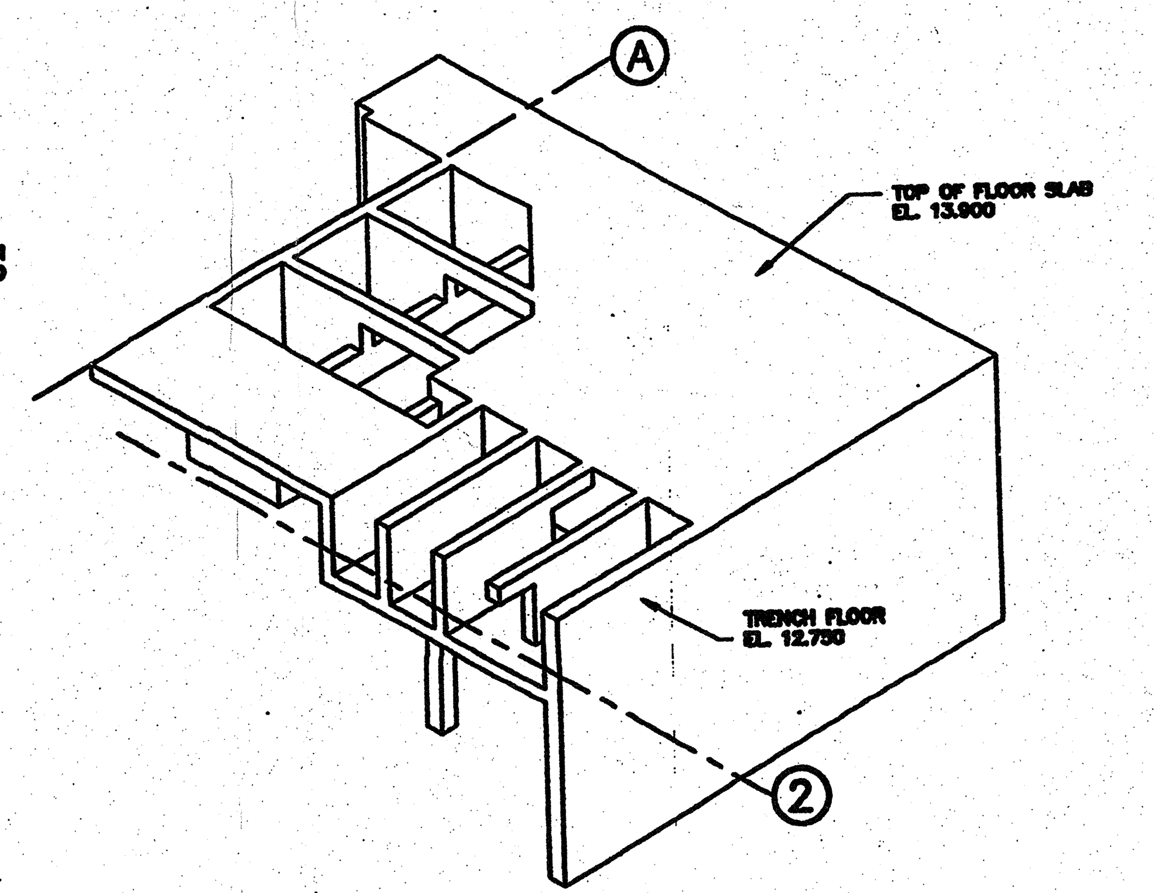

HEADWORKS TRENCH-A
NTS

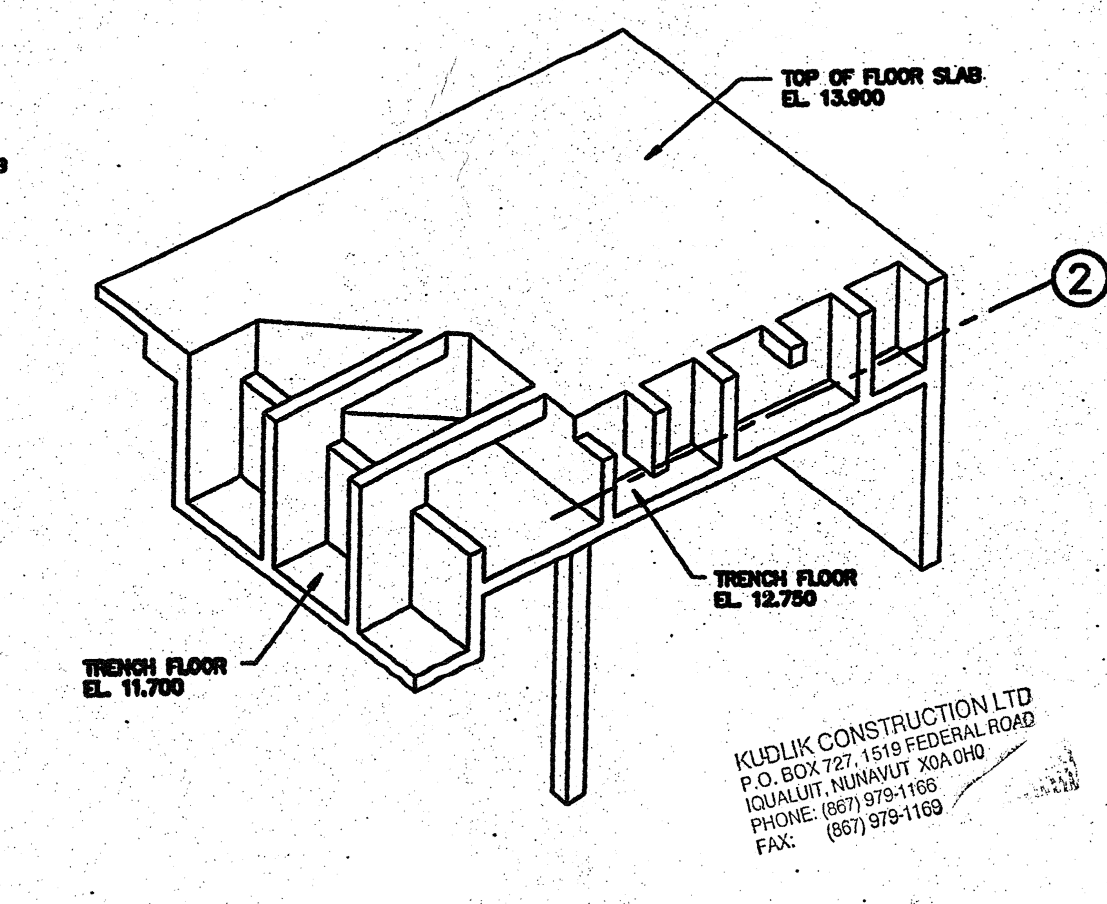

HEADWORKS TRENCH-B
NTS

KUDLIK CONSTRUCTION LTD
P.O. BOX 727, 1519 FEDERAL ROAD
IQALUIT, NUNAVUT X0A 0H0
PHONE: (867) 979-1166
FAX: (867) 979-1169

Stamp

ACIER ECAN
(Division de Acier AGF Inc.)
595, avenue Newton
Québec (Québec)
G1P 4C4
TÉL.: (418) 877-7715
FAX: (418) 877-9596

No.	Date	Description
0	2005 03/04	ISSUED FOR TENDER

REVISIONS

Iqaluit
CITY of IQALUIT, Nunavut

Design
Drawn
Approved
Checked

Project Title
CITY OF IQALUIT WASTEWATER TREATMENT PLANT PHASE 1

Drawing Title
STRUCTURAL MAIN FLOOR PLAN

Scale AS NOTED
Project No. 75360
Date 08.03.05
Drawing No. S132
Revision 0

LAST SAVED: 8/3/2005 9:00 AM

BEAM SCHEDULE

TYPE	WIDTH	DEPTH	REINFORCING			STIRRUPS	REMARKS
			TOP	MID.	BOT.		
B1	600	500	6-25M	–	6-25M	10M @ 300	
B2	200	1950	2-20M	10M @ 250	2-20M	10M @ 300	
B3	200	1400/1830	2-25M	10M @ 250	2-25M	10M @ 300	
B4	200	1400	2-25M	10M @ 250	2-25M	10M @ 300	
B5	250	1100	2-20M	10M @ 250	2-20M	10M @ 300	
B6	200	900	2-20M	10M @ 250	2-20M	10M @ 300	
B7	200	2450	2-20M	10M @ 250	2-20M	10M @ 300	
B8	200	2450	2-20M	10M @ 250	2-20M	10M @ 300	
B9	200	200	–	–	–	–	C130 X 10
B10	250	1830	2-25M	10M @ 250	2-25M	10M @ 300	
B11	600	500	6-25M	–	6-25M	10M @ 250	✓
B12	400	500	4-20M	–	6-25M	10M @ 300	

TOP OF SLAB EL. 13.900
SLAB REINFORCING PLAN
1:50

AUGER SUPPRT FRAME PLAN
1:50

DETAIL
S142 1:10

DETAIL
S142 1:10

HEADWORKS TRENCH-B
NTS

NTS

REVIEWED ACCORDING TO THE REQUIREMENTS OF THE GENERAL CONDITIONS OF THE CONTRACT. ANY ACTION INDICATED IS SUBJECT TO THESE REQUIREMENTS.
☐ NO EXCEPTION TAKEN
☐ MAKE NOTED CORRECTIONS
☐ REVISE & RESUBMIT
☐ REJECTED
SEP 27 2005

ACIER ECAN
(Division de Acier AGF Inc.)
695, avenue Newton
Québec (Québec)
G1P 4C4
TEL.: (418) 877-7715
FAX: (418) 877-9596

KUDLIK CONSTRUCTION LTD
P.O. BOX 727, 1519 FEDERAL ROAD
IQUALUIT, NUNAVUT X0A 0H0
PHONE: (867) 979-1165
FAX: (867) 979-1169

Stamp

No.	Date	Description
0	2005 03/04	ISSUED FOR TENDER

REVISIONS

Iqaluit
CITY of IQALUIT, Nunavut

Design
Drawn
Approved
Checked

Project Title
CITY OF IQALUIT
WASTEWATER
TREATMENT PLANT
PHASE 1

Drawing Title
STRUCTURAL
MAIN FLOOR PLAN

Scale
AS NOTED

Project No.	Date
75360	08.03.05

Drawing No.	Revision
S132	0

LAST SAVED: 8/3/2005 8:00 AM
L:\Work\V2000\V3300\V330-0401*\Issue\Work\14.05 Phase 1 Tender\S132.dwg

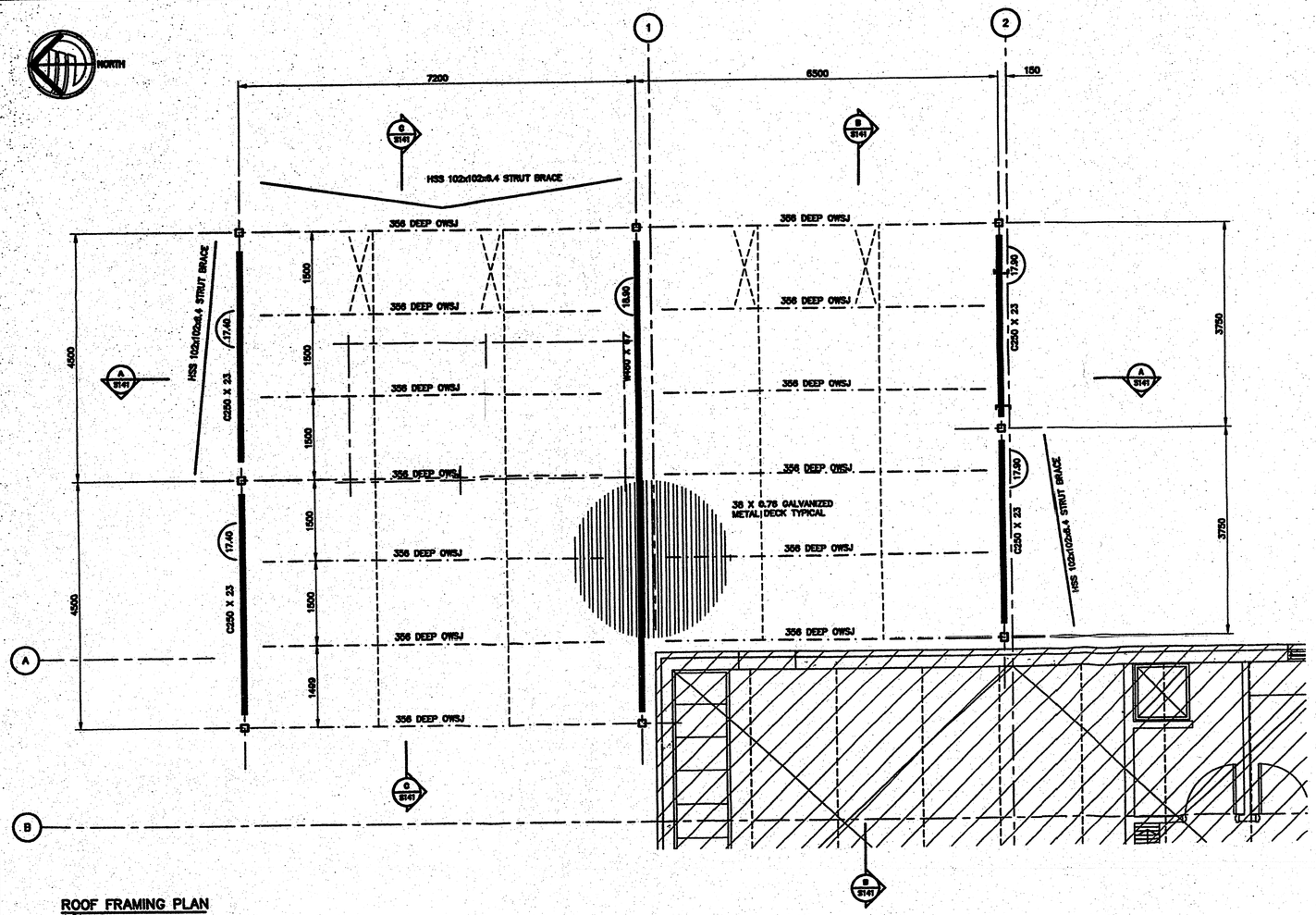

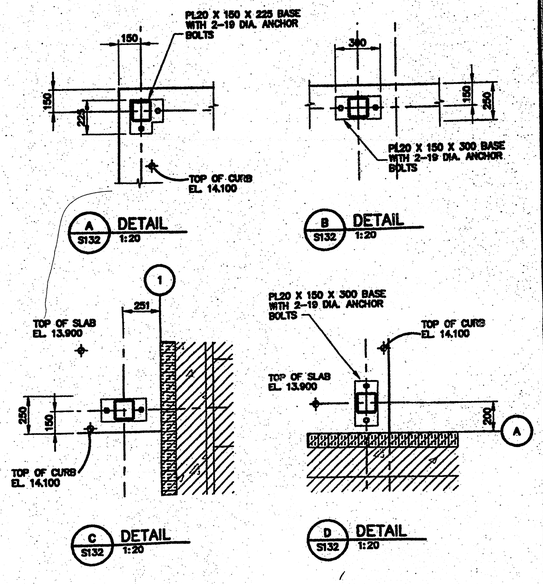

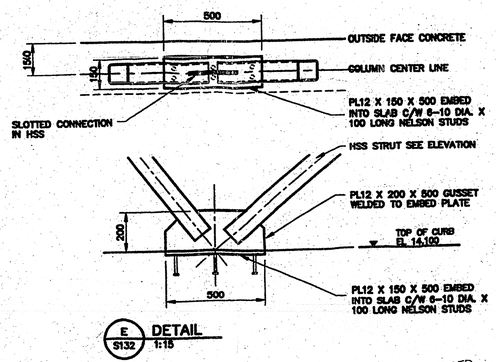

ROOF FRAMING PLAN
1:50

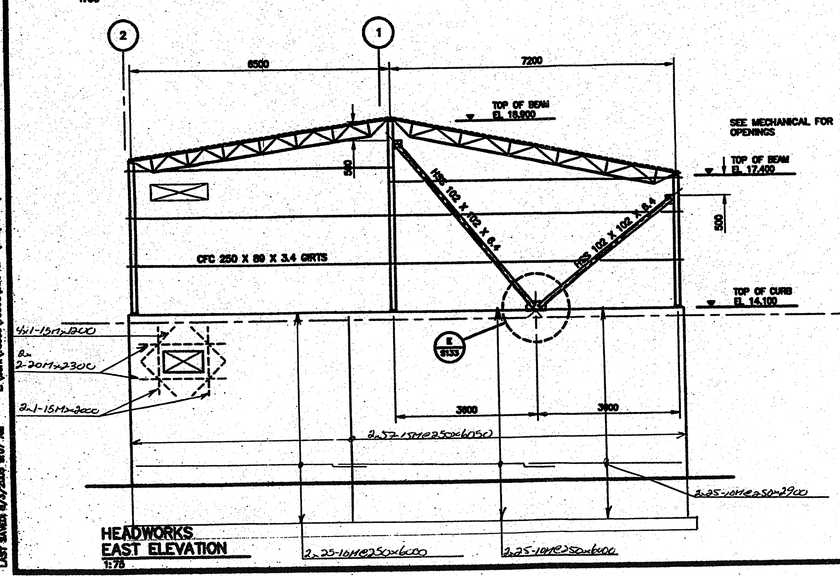

HEADWORKS EAST ELEVATION
1:75

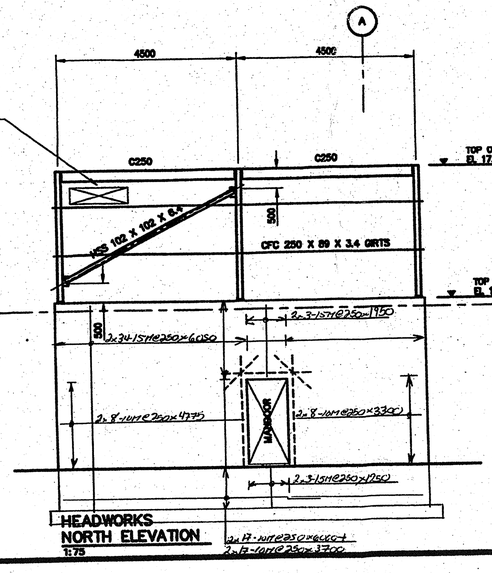

HEADWORKS NORTH ELEVATION
1:75

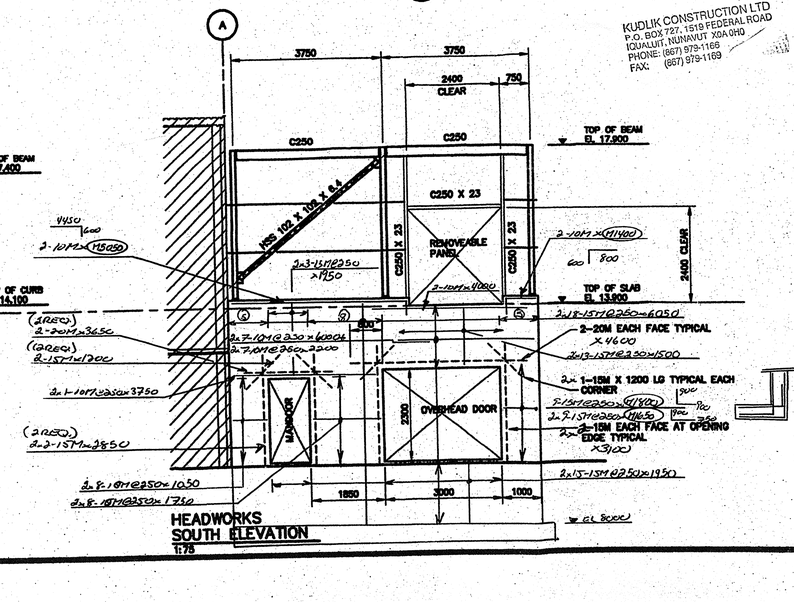

HEADWORKS SOUTH ELEVATION
1:75

KUDLIK CONSTRUCTION LTD
P.O. BOX 727, 1519 FEDERAL ROAD
IQUALUIT, NUNAVUT X0A 0H0
PHONE: (867) 979-1166
FAX: (867) 979-1169

ACIER ECAN
(Division de Acier AGF Inc.)
595, avenue Newton
Québec (Québec)
G1P 4C4
TÉL.: (418) 877-7715
FAX: (418) 877-9596

No.	Date	Description
0.	2005 03/04	ISSUED FOR TENDER

REVISIONS

iqaluit
CITY of IQALUIT, Nunavut

Design
Drawn
Approved
Checked

Project Title
CITY of IQALUIT WASTEWATER TREATMENT PLANT PHASE 1

Drawing Title
STRUCTURAL ROOF FRAMING

Scale AS NOTED
Project No. 75380
Date 05.03.04
Drawing No. S133
Revision 0

Stamp

LAST SAVED 5/3/2005 8:07 AM L:\projects\75300\75380\05-04\Cad\layout\sheets\14.05 Phase 1 Tender\S133.dwg

NORTH

TOP EQUIPMENT PAD EL. 10.200

150 CONCRETE SLAB R/W 15M @ 300 EACH WAY TOP ON COMPACTED GRANULAR FILL

TOP OF FLOOR EL. 10.000

NEW 500 kg CAPACITY JIB CRANE MOUNT TO CONCRETE COLUMN

3048 FIELD CONFIRM

CONCRETE LIFT STATION, FIELD CONFIRM LOCATION.

TOP OF GRATING FLOOR EL. 11.250

RELOCATE EXISTING W150 X 22 TO NEW ELEV.

NEW 51 X 4.8 GRATING

TRENCH INVERT EL. 9.750

TOP OF GRATING EL. 10.000

TRENCH INVERT EL. 9.250

SUMP INVERT EL. 9.000

DRAINAGE TILE INVERT EL. 9.000

SEE CIVIL DRAWINGS FOR GRADING AND APRON ELEVATIONS

15M @ 300

SEE SECTIONS FOR EXTRA REINFORCING OVER PEDESTALS

200 CONCRETE SLAB REINF AS SHOWN WITH 6-10M TOP TEMP

UP

2-20M BWLS

DRAINAGE TILE INVERT EL. 8.800

(4) REQUIRED
MVR
12-15M@250×1100 (DOWELS)
2×12-15M@250×1650 (VERT CH.F)
2×8-10M@250×2950 (HOR CH.E)

MVR
2×31-15M@250×6050 (VERT CH.F)
2×25-10M@250×6000+
2×25-10M@250×3000 (HOR CH.F)

MVR
2×21-15M@250×5850 (VERT CH.F)
2×24-10M@250×4750 (HOR CH.F)

MVR
2×26-15M@250×5850 (VERT CH.F)
2×24-10M@250×6300 (HOR CH.F)

MVR
2×6-15M@250×5550 (VERT CH.F)
2×24-10M@250×1300 (HOR CH.F)

COVR
135-10M@1150
175-10M@1800

FOUNDATION PLAN
1:75

NOTE:
FIELD CONFIRM ALL DIMENSIONS PRIOR TO FABRICATION

BASE PLATE
25mm GROUT

NOTES :
DETAILER SHALL CONFIRM THAT FITMENT OF ANCHOR BOLTS IN CONCRETE IS ACCEPTABLE AND ADVISE IF LENGTH REQUIRES ADJUSTMENT.

TYPICAL ANCHOR BOLT
NTS

10-20M VERTICAL 10M TIES @ 300

TYPICAL FOUNDATION WALL SEE DETAIL 1/S3.06

A S131 DETAIL
1:15

CHAMFER EXPOSED EDGES 20mm

15M @ 250 VERT EACH FACE
10M @ 250 HORZ EACH FACE

CONCRETE PAD FOOTING (DEPTH VARIES) R/W 15M @ 300 EACH WAY BOTTOM.

B S131 DETAIL
1:15

KUDLIK CONSTRUCTION LTD
P.O. BOX 727, 1519 FEDERAL ROAD
IQUALUIT, NUNAVUT X0A 0H0
PHONE: (867) 979-1169
FAX: (867) 979-1169

Stamp

ACIER ECAN
(Division de Acier AGF Inc.)
Avenue Newton
Québec (Québec)
404
TEL.: (418) 877-7715
FAX: (418) 877-9596

No.	Date	Description
0	2005 03/04	ISSUED FOR TENDER

REVISIONS

Iqaluit
CITY of IQALUIT, Nunavut

Design
Drawn
Approved
Checked

Project Title
CITY OF IQALUIT WASTEWATER TREATMENT PLANT PHASE 1

Drawing Title
STRUCTURAL FOUNDATION PLAN

Scale
AS NOTED

Project No. 75360
Date 04.05.04

Drawing No. S131
Revision 0

LAST SAVED: 8/3/2005 8:00 AM
L:\work\75360\75360\75360-CAD\DRAWINGS\Phase 1 Headworks\S131.dwg

NORTH

EQUIPEMENT PAD
4200x2250
45-10M@300 (D350)
15-10M@300x2150
8-10M@300x4100

TOP EQUIPMENT PAD EL. 10.200

100 CONCRETE SLAB R/W 15M @ 300 EACH WAY TOP ON COMPACTED GRANULAR FILL

TOP OF FLOOR EL. 10.000

NEW 500 kg CAPACITY JIB CRANE MOUNT TO CONCRETE COLUMN

TRENCH INVERT EL. 9.750

TOP OF GRATING EL. 10.000

TRENCH INVERT EL. 9.250

DRAINAGE TILE INVERT EL. 9.000

SEE CIVIL DRAWINGS FOR GRADING AND APRON ELEVATIONS

SUMP INVERT EL. 9.000

TOP OF GRATING FLOOR EL. 11.250

RELOCATE EXISTING W150 X 22 TO NEW ELEV.

NEW 51 X 4.8 GRATING

200 CONCRETE SLAB REINF AS SHOWN WITH 6-10M TOP TEMP

SEE SECTIONS FOR EXTRA REINFORCING OVER PEDESTALS

2-20M DWLS

DRAINAGE TILE INVERT EL. 8.800

ANCRAGE DE LA DALLE
200-10M@300x700

DWLS TO FT6?
15M @ 250

FOUNDATION PLAN
1:75

NOTE:
FIELD CONFIRM ALL DIMENSIONS PRIOR TO FABRICATION

BASE PLATE
25mm GROUT

NOTES :
DETAILER SHALL CONFIRM THAT FITMENT OF ANCHOR BOLTS IN CONCRETE IS ACCEPTABLE AND ADVISE IF LENGTH REQUIRES ADJUSTMENT.

TYPICAL ANCHOR BOLT
NTS

10-20M VERTICAL 10M TIES @ 300

TYPICAL FOUNDATION WALL SEE DETAIL 1/S3.06

CHAMFER EXPOSED EDGES 20mm

15M @ 250 VERT EACH FACE
10M @ 250 HORZ EACH FACE

CONCRETE PAD FOOTING (DEPTH VARIES) R/W 15M @ 300 EACH WAY BOTTOM.

FIBREGLASS REINFORCED PLASTIC (FRP) EMBEDMENT Y-SHAPED ANGLE FROM FIBREGRATE COMPOSITE STRUCTURES INC.

FIBREGLASS REINFORCED (FRP) 50mm GRATING

TRENCH INVERT SEE PLAN

200 CONCRETE R/W 10M @ 300 EACH WAY

(@ REPLIER DWLS LA DALLE)

A DETAIL S131 1:15

B DETAIL S131 1:15

KUDLIK CONSTRUCTION LTD
P.O. BOX 727, 1519 FEDERAL ROAD
IQUALUIT, NUNAVUT X0A 0H0
PHONE: (867) 979-1166
FAX: (867) 979-1169

Stamp

ACIER ECAN
(Division de Acier AGF Inc.)
595, avenue Newton
Québec (Québec)
G1P 4C4
TÉL.: (418) 877-7715
FAX : (418) 877-9596

No.	Date	Description
0	2005 03/04	ISSUED FOR TENDER

REVISIONS

CITY of IQALUIT, Nunavut

Design
Drawn
Approved
Checked

Project Title
CITY OF IQALUIT WASTEWATER TREATMENT PLANT PHASE 1

Drawing Title
STRUCTURAL FOUNDATION PLAN

Scale
AS NOTED

Project No. 75360
Date 04.05.04

Drawing No. S131
Revision 0

LAST SAVED: 8/5/2005 8:09 AM
L:\work\75000\75360\dao—cad\arch\structural\phase 1 headworks\s131.dwg

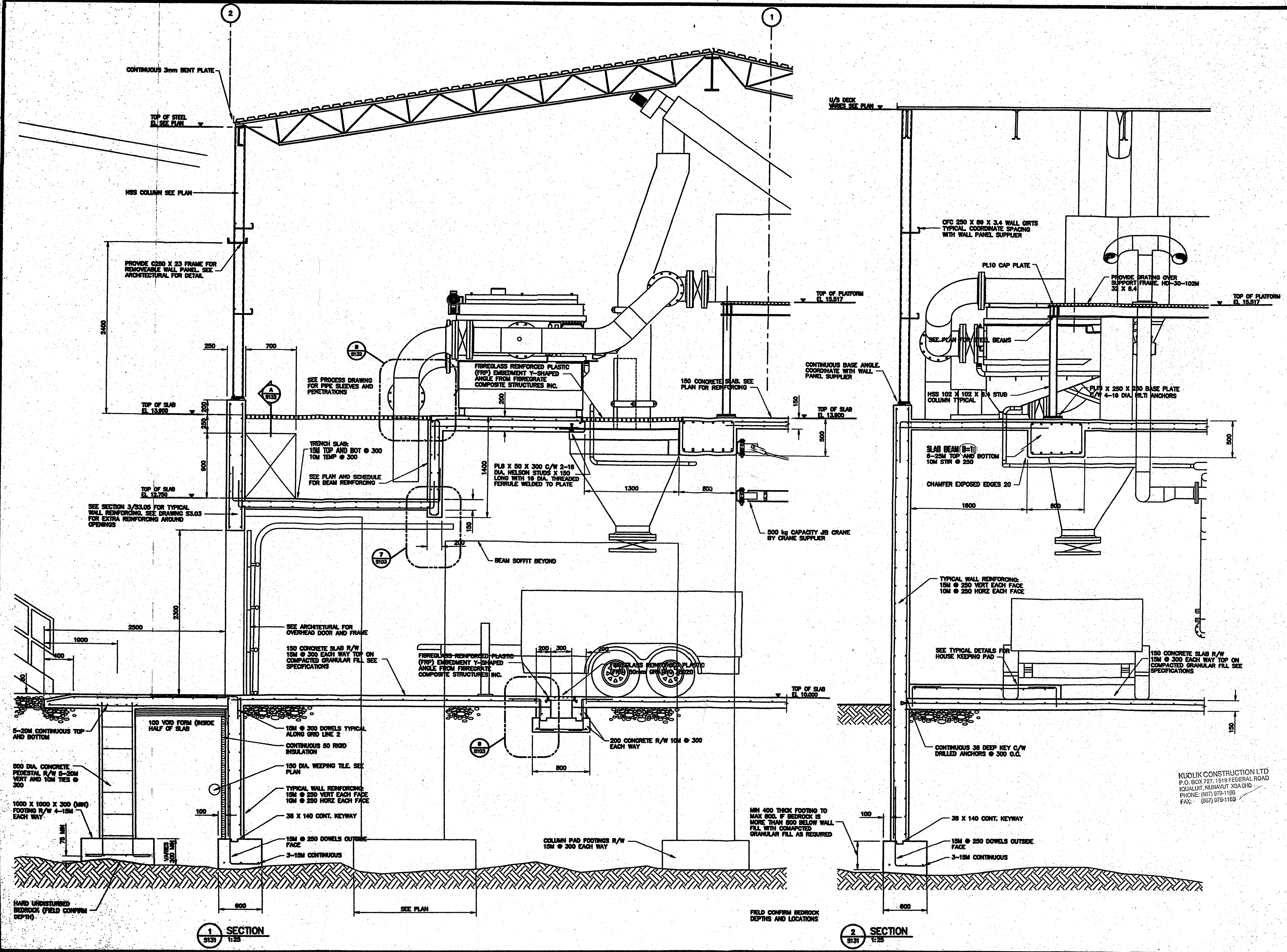

L:\work\75000\75360\02c-CAD\WFT\issued\March.14.05 Phase 1 Tender\S142.dwg LAST SAVED: 8/3/2005 9:55 AM

Stamp
ACIER ECAN (Division de Acier AGF Inc.) Avenue Newton Québec (Québec) G1P 4C4 TÉL.: (418) 877-7715 FAX: (418) 877-8596

No.	Date	Description
0	2005 03/04	ISSUED FOR TENDER

REVISIONS

Iqaluit
CITY of IQALUIT, Nunavut

Design
Drawn
Approved
Checked

KUDLIK CONSTRUCTION LTD
P.O. BOX 727, 1519 FEDERAL ROAD
IQALUIT, NUNAVUT X0A 0H0
PHONE: (867) 979-1166
FAX: (867) 979-1169

Project Title
CITY OF IQALUIT WASTEWATER TREATMENT PLANT PHASE 1

Drawing Title
STRUCTURAL SECTIONS AND DETAILS

Scale: AS NOTED
Project No.: 75360
Date: 08.03.05
Drawing No.: S142
Revision: 0

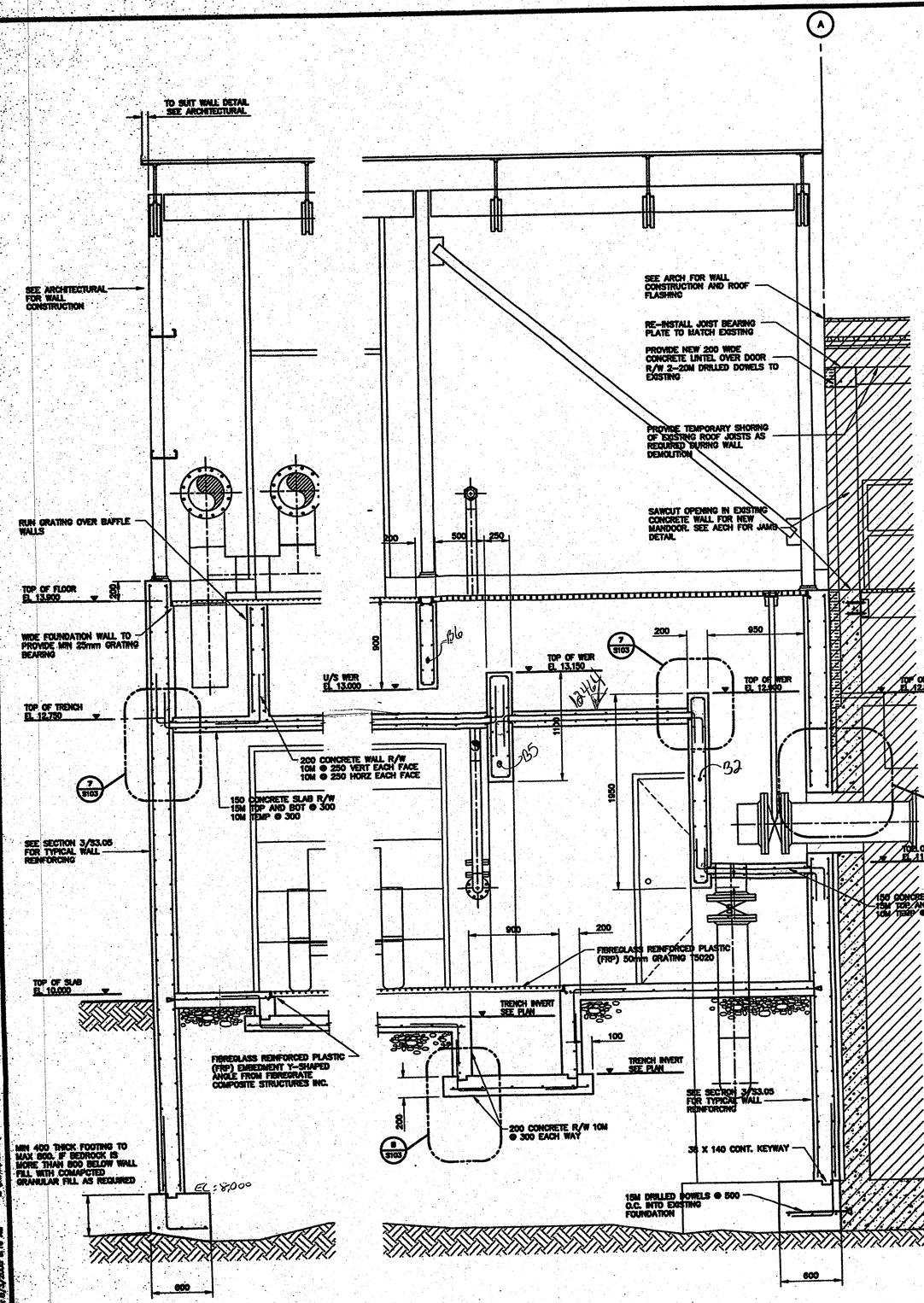

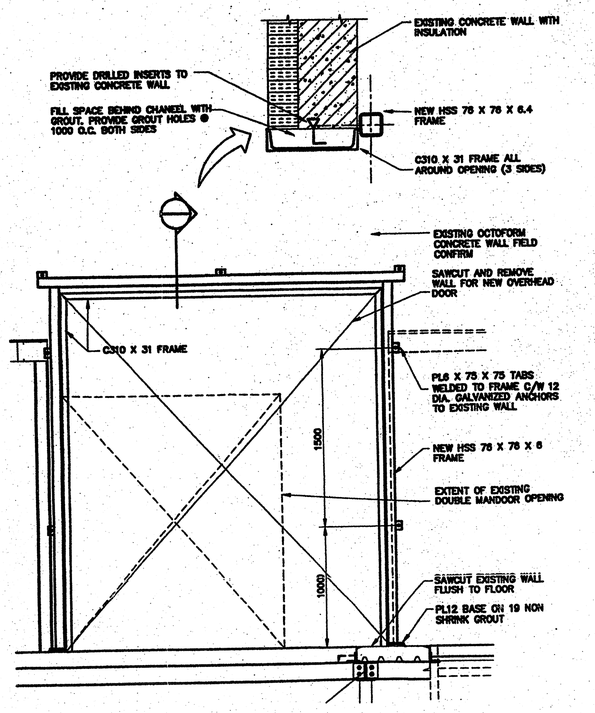

3 S132 DETAIL 1:25

KUDLIK CONSTRUCTION LTD
P.O. BOX 727, 1519 FEDERAL ROAD
IQALUIT, NUNAVUT X0A 0H0
PHONE: (867) 979-1165
FAX: (867) 979-1169

Stamp

No.	Date	Description
REVISIONS		
0	2005 03/04	ISSUED FOR TENDER

iqaluit
CITY of IQALUIT, Nunavut

Design
Drawn
Approved
Checked

Project Title
CITY OF IQALUIT WASTEWATER TREATMENT PLANT PHASE 1

Drawing Title
STRUCTURAL SECTIONS AND DETAILS

Scale: AS NOTED
Project No.: 75360
Date: 08.03.05
Drawing No.: S143
Revision: 0

LAST SAVED: 8/3/2005 9:18 AM
L:\Work\75000\75360\02-CAD\GA\Issued\Work\1405 Phase 1 Tender\S143.dwg

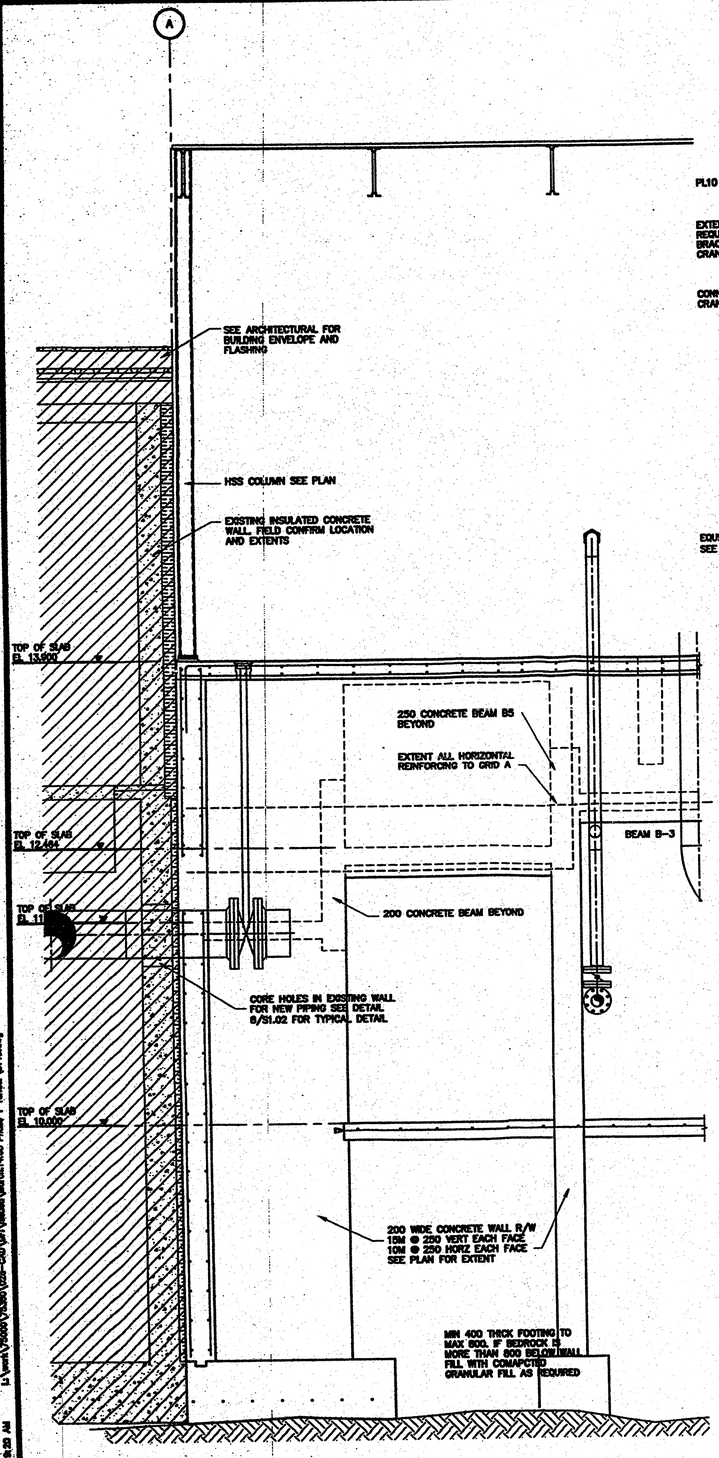

1 / S1.32 SECTION 1:25

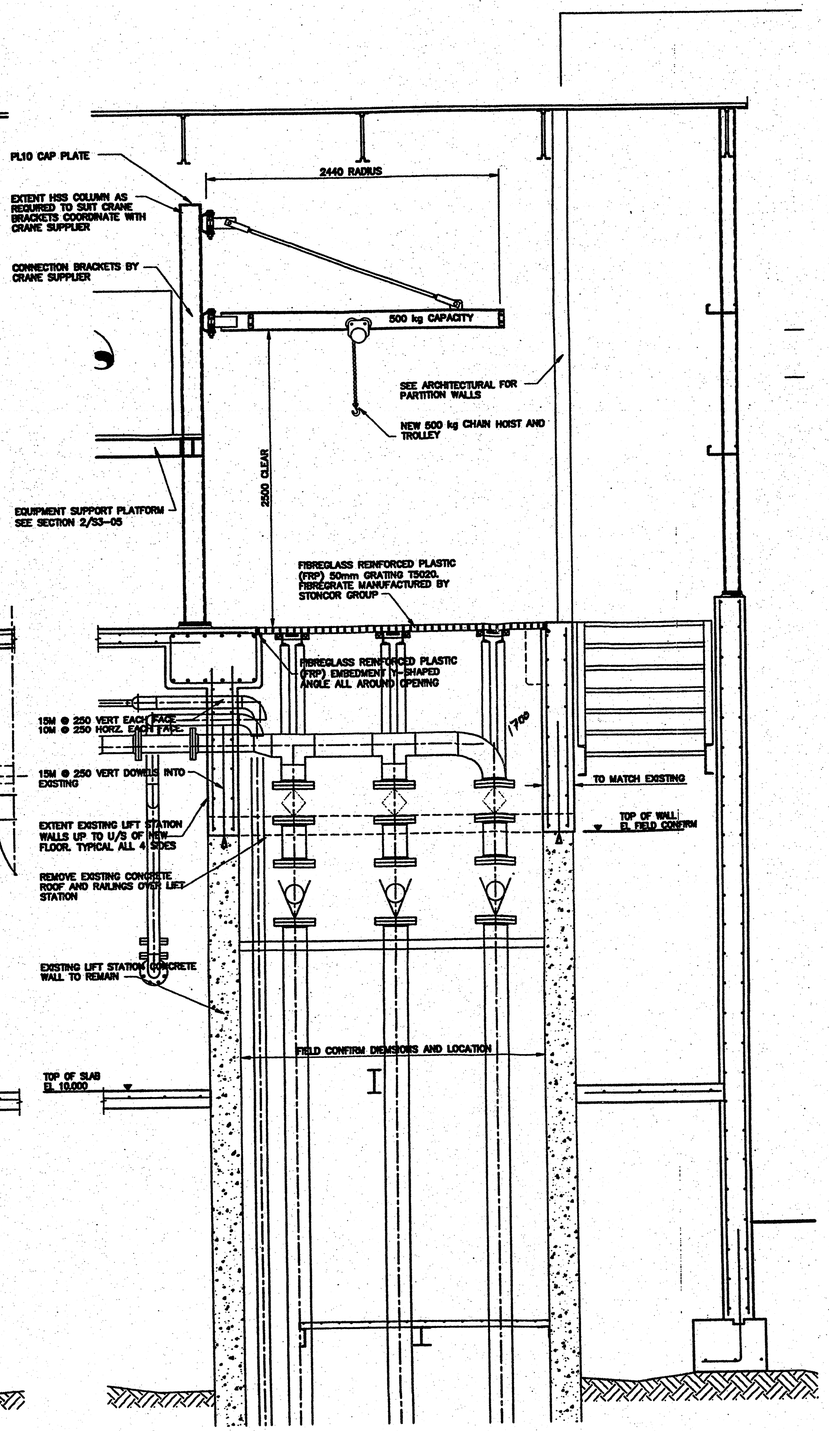

2 / S1.32 SECTION 1:25

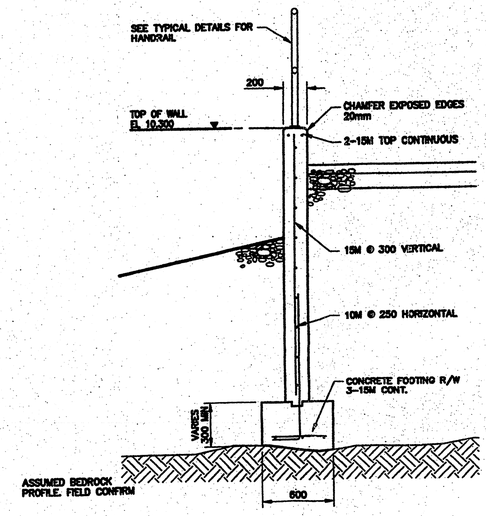

3 / S1.31 SECTION 1:25

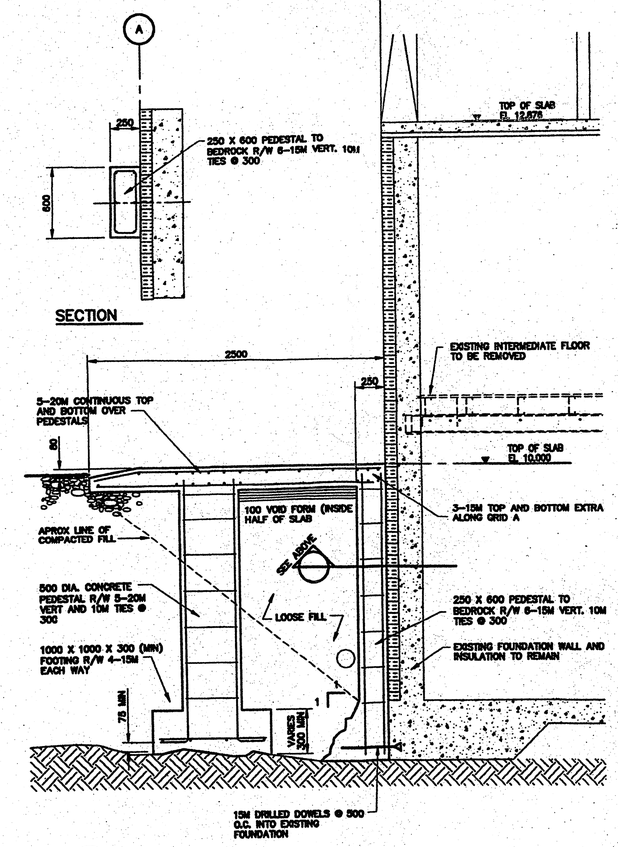

4 / S1.31 SECTION 1:25

KUDLIK CONSTRUCTION LTD
P.O. BOX 727, 1519 FEDERAL ROAD
IQUALUIT, NUNAVUT X0A 0H0
PHONE: (867) 979-1166
FAX: (867) 979-1169

Stamp

No.	Date	Description
0	2005 03/04	ISSUED FOR TENDER

REVISIONS

CITY of IQALUIT, Nunavut

Design
Drawn
Approved
Checked

Project Title
CITY OF IQALUIT WASTEWATER TREATMENT PLANT PHASE 1

Drawing Title
STRUCTURAL SECTIONS AND DETAILS

Scale: AS NOTED
Project No.: 75360
Date: 05.03.05
Drawing No.: S145
Revision: 0

LAST SAVED: 8/3/2005 8:20 AM
L:\Work\75000\75360\02-CAD\DFT\Issued\March 14.05 Phase 1 Tender\S145.dwg

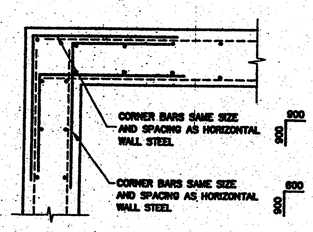

CORNER BAR REINFORCING

1 DETAIL 1:20

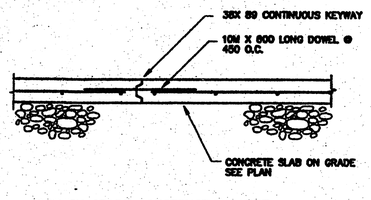

SLAB ON GRADE CONSTRUCTION JOINT

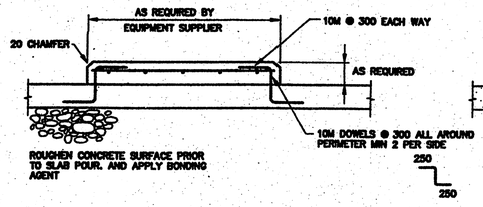

EQUIPMENT PAD ON NEW CONCRETE SLAB

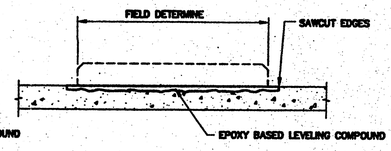

REMOVE EXISTING EQUIPMENT PAD

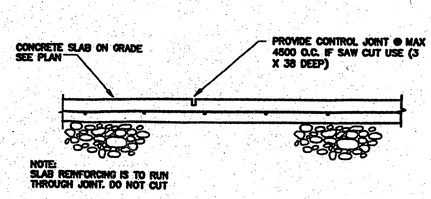

SLAB ON GRADE CONTROL JOINT

2 DETAIL 1:20

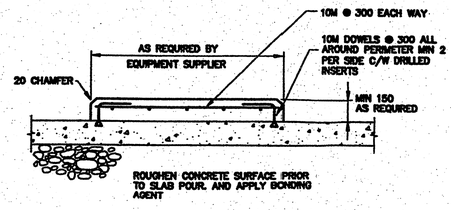

NEW EQUIPMENT PAD ON EXISTING SLAB

3 DETAIL 1:20

NOTES:

1. PAD SIZE SHALL BE MINIMUM INDICATED ON THE PLANS OR AS DETERMINED BY THE EQUIPMENT MANUFACTURER.
2. THE SIZE, NUMBER, TYPE, LOCATION, AND THREAD PROJECTION OF THE ANCHOR BOLTS IS TO BE DETERMINED BY THE EQUIPMENT MANUFACTURER.
3. ANCHOR BOLTS SHALL BE HELD IN POSITION WITH A TEMPLATE WHILE SLAB IS BEING POURED.
4. EQUIPMENT BASES SHALL BE INSTALLED LEVEL UNLESS SPECIFIED OTHERWISE.
5. SHIMS SHALL BE USED TO SUPPORT THE BASE WHILE THE NON-SHRINK GROUT IS PLACED. TEMPORARY LEVELING NUTS SHALL BE BACKED OFF. IF LEFT IN, SHIMS SHALL NOT BE EXPOSED TO VIEW.
6. CLEAN AND PREPARE EXISTING FLOOR SURFACE BELOW PAD.

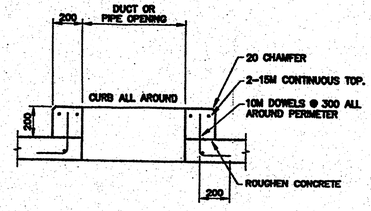

CURB AROUND DUCT OR PIPE

4 DETAIL 1:20

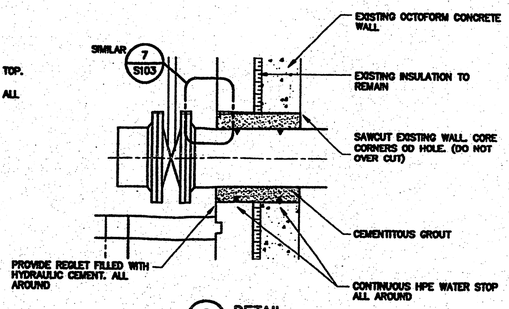

5 DETAIL 1:20

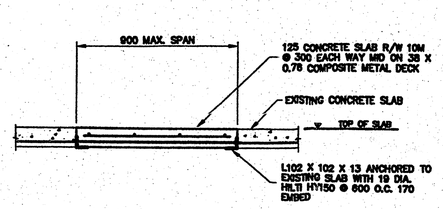

FILL-IN EXISTING FLOOR HOLES

6 DETAIL 1:20

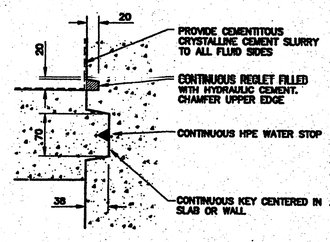

7 DETAIL 1:5

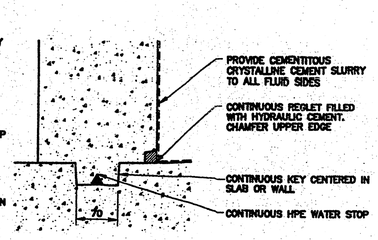

8 DETAIL 1:5

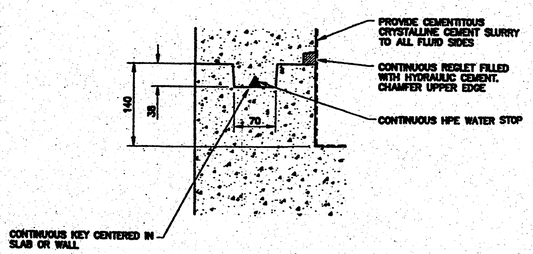

9 DETAIL 1:5

KUDLIK CONSTRUCTION LTD
P.O. BOX 727, 1519 FEDERAL ROAD
IQUALUIT, NUNAVUT X0A 0H0
PHONE: (867) 979-1166
FAX: (867) 979-1169

ECAN
de Acier AGF Inc.)
ue Newton
Québec (Québec)
G1P 4C4
TÉL.: (418) 877-7715
FAX: (418) 877-9596

Stamp

No.	Date	Description
0	2005 03/04	ISSUED FOR TENDER

REVISIONS

Iqaluit
CITY of IQALUIT, Nunavut

Design
Drawn
Approved
Checked

Project Title
CITY OF IQALUIT WASTEWATER TREATMENT PLANT PHASE 1

Drawing Title
STRUCTURAL TYPICAL DETAILS

Scale AS NOTED
Project No. 75360
Date 27.09.04
Drawing No. S103
Revision 0

LAST SAVED 7/9/2005 2:50 PM L:\work\75300\75360\25-CAD\GR\Structural\Phase 1 Hookendal\S103.dwg

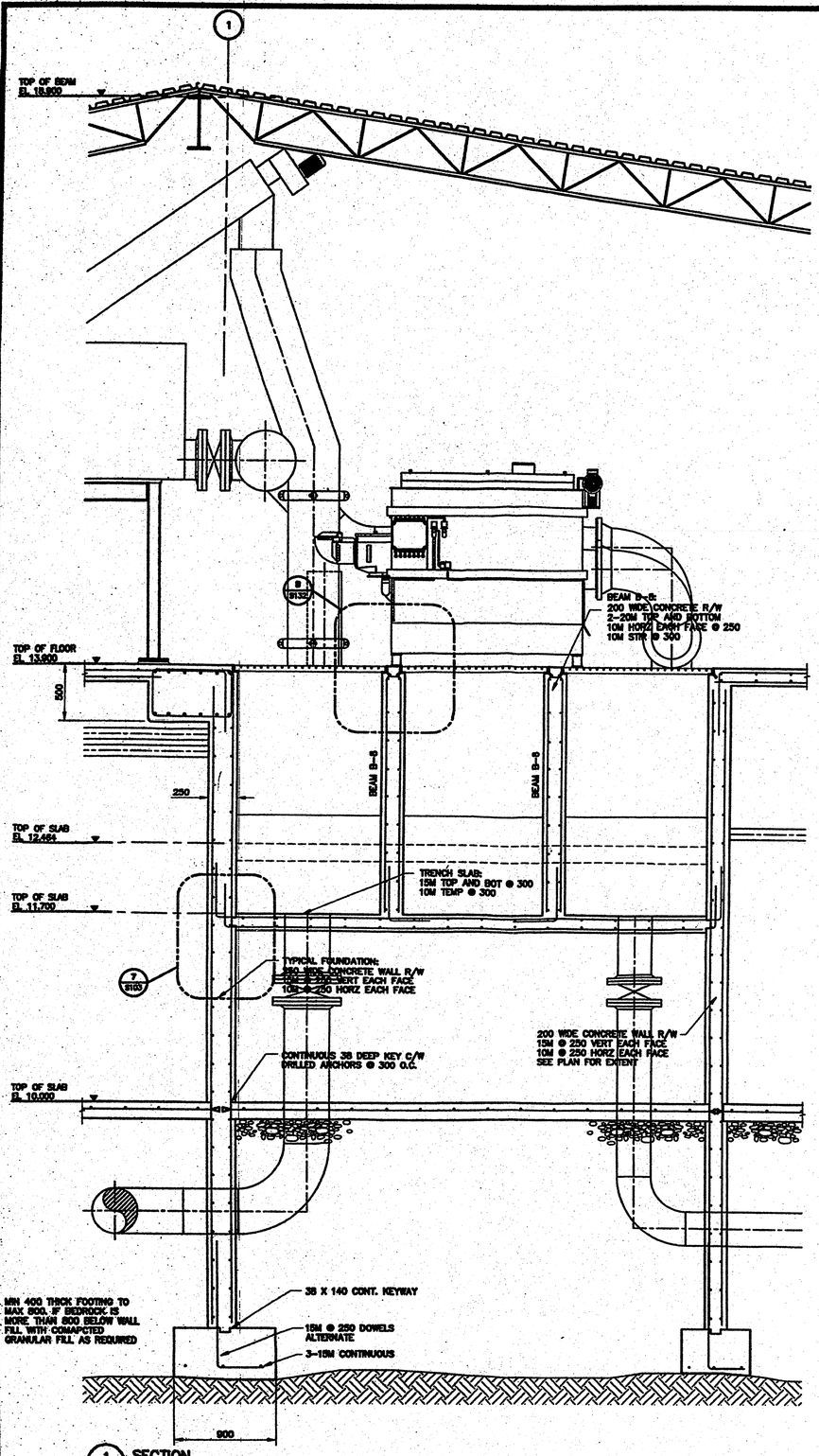

1 SECTION
S132 1:25

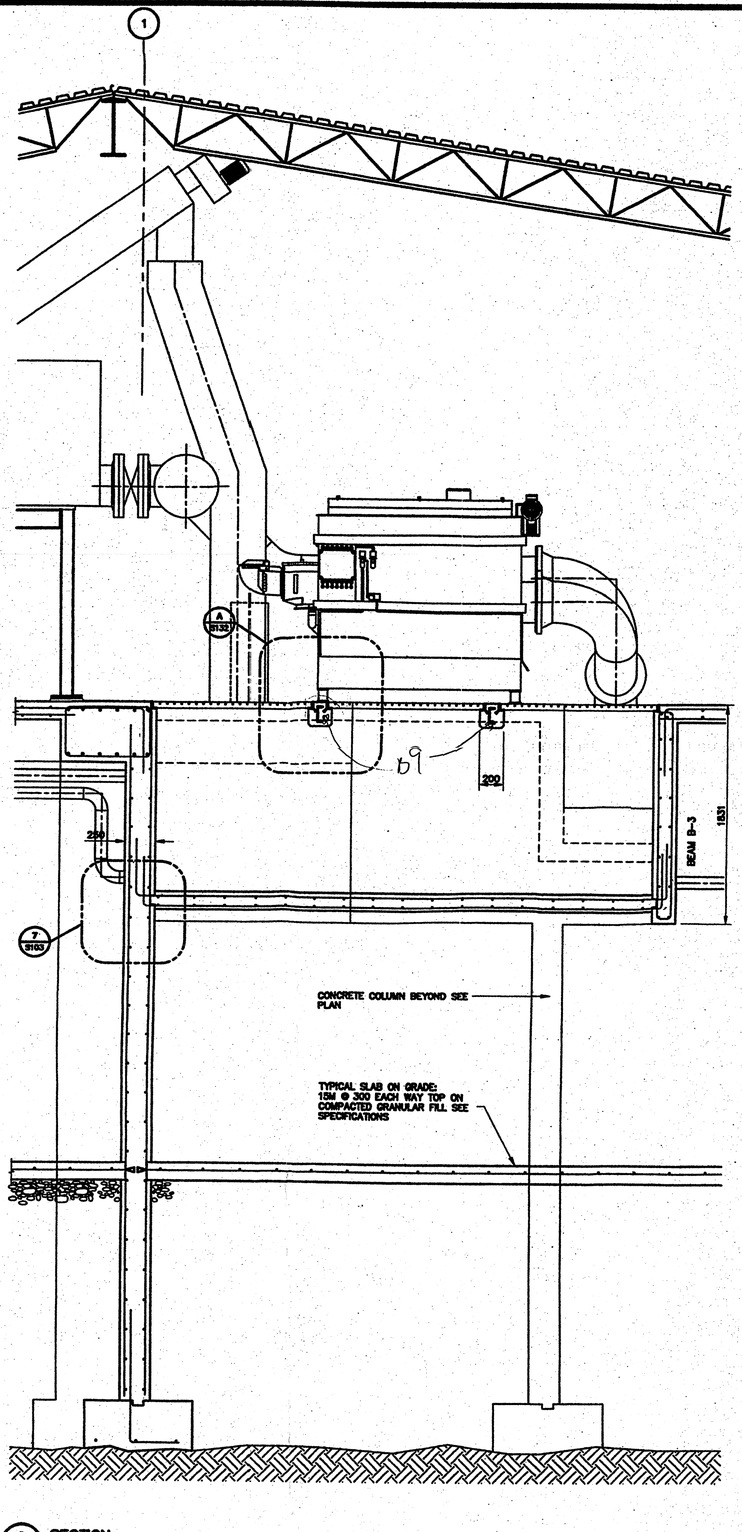

2 SECTION
S132 1:25

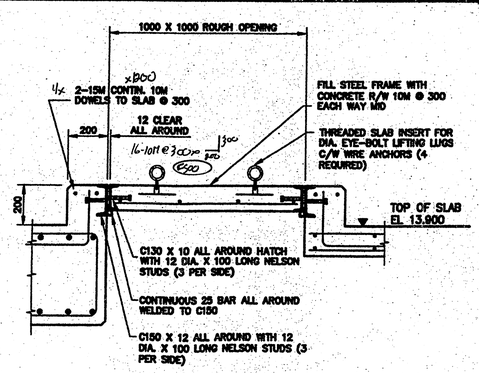

3 SECTION
1:15

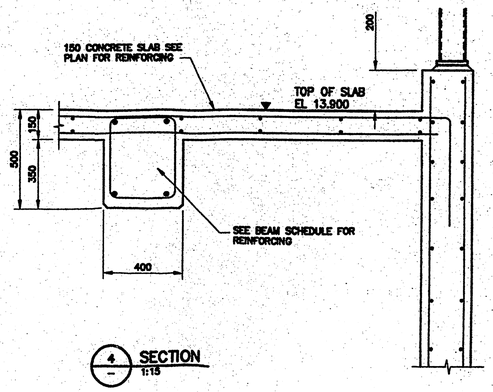

4 SECTION
1:15

KUDLIK CONSTRUCTION LTD
P.O. BOX 727, 1519 FEDERAL ROAD
IQUALUIT, NUNAVUT X0A 0H0
PHONE: (867) 979-1166
FAX: (867) 979-1169

Stamp

ACIER ECAN
(A division de Acier AGF Inc.)
545, avenue Newton
Québec (Québec)
G1P 4C4
TÉL.: (418) 877-7715
FAX : (418) 877-9596

No.	Date	Description
0	2005 03/04	ISSUED FOR TENDER

REVISIONS

CITY of IQALUIT, Nunavut

Design
Drawn
Approved
Checked

Project Title
CITY OF IQALUIT
WASTEWATER
TREATMENT PLANT
PHASE 1

Drawing Title
STRUCTURAL SECTIONS AND DETAILS

Scale
AS NOTED

Project No. 75360
Date 08.03.05

Drawing No. S144
Revision 0

LAST SAVED 5/4/2005 8:19 AM L:\Work\75000\75360\052-CAD\DRT\Issued\Struct\A05 Phase 1 Tender\S144.dwg

NORTH

SEMELLE
2x3-15M x 7400 (CONT.)
57-15M @ 350 x (F450) 1950 400 (F.EXT.)
12-15M @ ±1200 x 1450 (F.INT.)
14-15M @ ±1000 x 500 (TRANS.)

SEMELLE
3-15M x 7800 (CONT.)
7-15M @ ±1200 x 500 (TRANS.)
31-15M @ 250 x (F450) 1950 400 (F.EXT.)
9-15M @ ±1000 x 500 (F.INT.)

SEMELLE
4-15M @ 300 x 3650 (CONT.)
7-15M @ 300 x 800 (TRANS)
3-15M @ 300 x 1100
1-15M @ 300 x 600
22-15M @ 450 x 300 (F450) (CIF)

SEMELLE
3-15M x 7550 (CONT.)
31-15M @ 350 x (F450) 1450 400 (F.EXT.)
7-15M @ ±1200 x 500 (TRANS)
11-15M @ ±1000 x 1450 (F.INT.)

SEMELLE
3-15M @ 2250 (CONT.)
7-15M @ 250 x (F850) 1450 400 (F.EXT.)
3-15M @ ±1000 x 1450 (F.INT.)

SEMELLE
2x 3-15M x 5350 (CONT.)
8-15M @ ±1200 x 500 (TRANS.)
38-15M @ 250 x (F450) 1950 400 (F.EXT.)
9-15M @ ±1000 x 1450 (F.INT.)

SEMELLE
3-15M x 4450 (CONT.)
3-15M @ ±1200 x 500 (TRANS.)
6-15M @ 350 x (F450) 1950 400 (F.EXT.)
3-15M @ ±1000 x 1450 (F.INT.)

SEMELLE
3-15M x 6850 (CONT.)
6-15M @ ±1200 x 500 (TRANS.)
26-15M @ 250 x (F450) 1950 400 (F.EXT.)
7-15M @ ±1000 x 1450 (F.INT.)

DRAINAGE TILE INVERT EL. 9.000

SEE CIVIL DRAWINGS FOR GRADING AND APRON ELEVATIONS

TOP EQUIPMENT PAD EL. 10.200

150 CONCRETE SLAB R/W 15M @ 300 EACH WAY TOP ON COMPACTED GRANULAR FILL

TRENCH INVERT EL. 9.750

TOP OF GRATING EL. 10.000

TOP OF FLOOR EL. 10.000

NEW 500 kg CAPACITY JIB CRANE MOUNT TO CONCRETE COLUMN

TRENCH INVERT EL. 9.250

3048 FIELD CONFIRM

15M @ 300

SEE SECTIONS FOR EXTRA REINFORCING OVER PEDESTALS

200 CONCRETE SLAB REINF AS SHOWN WITH 6-10M TOP TEMP

SUMP INVERT EL. 9.000

1525mm CONCRETE LIFT STATION FIELD CONFIRM LOCATION

TOP OF GRATING FLOOR EL. 11.250

RELOCATE EXISTING W150 X 22 TO NEW ELEV.

NEW 51 X 4.8 GRATING

DRAINAGE TILE INVERT EL. 8.800

2-20M DWLS

UP

1450

FOUNDATION PLAN
1:75

NOTE:
FIELD CONFIRM ALL DIMENSIONS PRIOR TO FABRICATION

TYPICAL ANCHOR BOLT
NTS

NOTES :
DETAILER SHALL CONFIRM THAT FITMENT OF ANCHOR BOLTS IN CONCRETE IS ACCEPTABLE AND ADVISE IF LENGTH REQUIRES ADJUSTMENT.

A DETAIL S131 1:15

10-20M VERTICAL 10M TIES @ 300

TYPICAL FOUNDATION WALL SEE DETAIL 1/S3.06

B DETAIL S131 1:15

3-15M @ 300 x 1950

8-15M @ 300 x 550

14-15M x (E850) 1450 400

15M @ 250 VERT EACH FACE
10M @ 250 HORZ EACH FACE

CHAMFER EXPOSED EDGES 20mm

2-7-15M @ 250 x 4700 (VERT.)
19-10M @ 250 x (3600) 1550 150
17-10M @ 250 x (1600) 150 550

CONCRETE PAD FOOTING (DEPTH VARIES) R/W 15M @ 300 EACH WAY BOTTOM.

KUDLIK CONSTRUCTION LTD
P.O. BOX 727, 1519 FEDERAL ROAD
IQUALUIT, NUNAVUT X0A 0H0
PHONE: (867) 979-1166
FAX: (867) 979-1169

Stamp

ACIER ECAN
(Division de Acier AGF Inc.)
595, avenue Newton
Québec (Québec)
G1P 4C4
TÉL.: (418) 877-7715
FAX: (418) 877-9596

No.	Date	Description
0	2005 03/04	ISSUED FOR TENDER

REVISIONS

Iqaluit
CITY of IQALUIT, Nunavut

Design
Drawn
Approved
Checked

Project Title
CITY OF IQALUIT WASTEWATER TREATMENT PLANT PHASE 1

Drawing Title
STRUCTURAL FOUNDATION PLAN

Scale
AS NOTED

Project No. 75360
Date 04.05.04

Drawing No. S131
Revision 0

LAST SAVED: 8/3/2005 8:00 AM
L:\Work\75000\75360\02a--CAD\Dft\Structural\Phase 1 Headworks\S131.dwg

DIV	GRID LOC.	ELEV.
1	A/2'-3'	+12.303

CERTIFIÉ ISO 9002

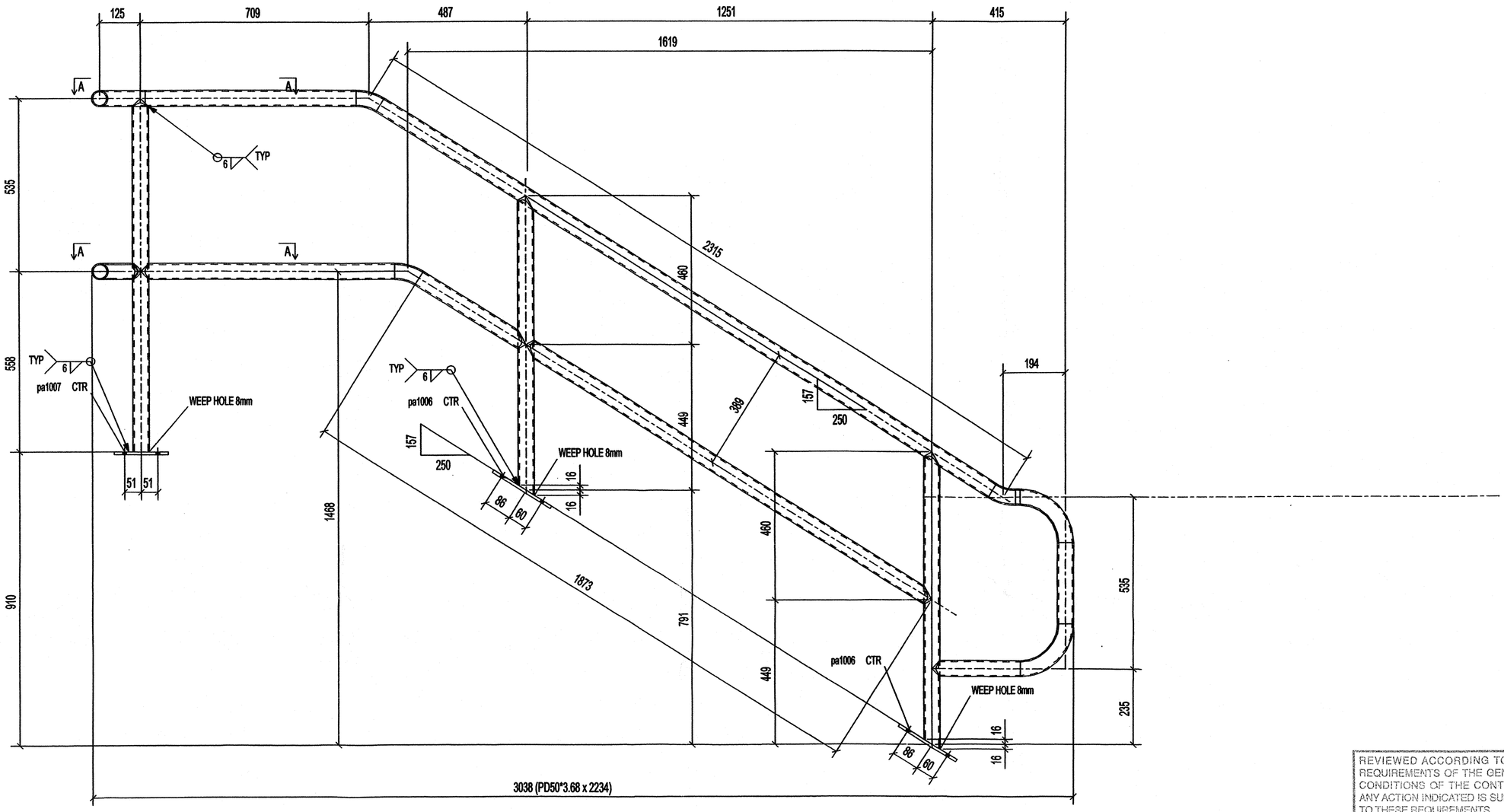

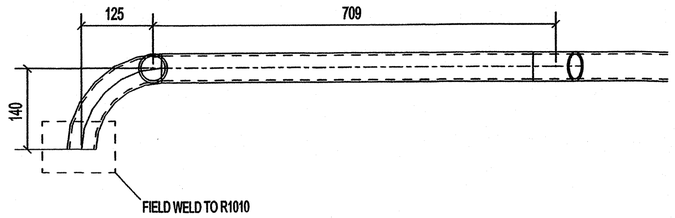

A - A

1 - RAIL - R1009

**9180mm TOTAL RAIL LENGHT NEEDED (GROSS)

QTE	MARQUE	DESCRIPTION	LONG.	REMARKS
1	R1009	RAIL		
1	R1009	PD50*3.68	2234	
3	ma1029	PD50*3.68	220	
3	ma1030	PD50*3.68	79	
1	ma1033	PD50*3.68	14	
1	ma1034	PD50*3.68	255	
1	ma1035	PD50*3.68	275	
1	ma1036	PD50*3.68	1483	
1	ma1037	PD50*3.68	386	
1	ma1038	PD50*3.68	786	
1	ma1039	PD50*3.68	654	
1	ma1066	PD50*3.68	1093	
2	ma1068	PD50*3.68	925	
1	ma1080	PD50*3.68	200	
2	pa1006	PL9X64	210	
1	pa1007	PL9X64	166	

QTE	DESCRIPTION
6	BOLT_3/8"DIA_A307_1"3/4
BOULONS DE CHANTIER	

REVIEWED ACCORDING TO THE REQUIREMENTS OF THE GENERAL CONDITIONS OF THE CONTRACT. ANY ACTION INDICATED IS SUBJECT TO THESE REQUIREMENTS.

- [x] NO EXCEPTIONS TAKEN
- [ ] MAKE NOTED CORRECTIONS
- [ ] REVISE & RESUBMIT
- [ ] REJECTED

DATE JUL 11 2005 BY RR
EARTH TECH (CANADA) INC.

Joel Rheaume 100724 QUÉBEC

REV.	DESCRIPTION	DATE	PAR
0	FOR APPROVAL	29-06-05	

TROUS	PEINTURE	ACIER
13/16 Ø U/N	GALVANIZED	300W U/N

DESSINER PAR	VERIFIER PAR	REV.
A.P. 06/28/2005	B.P.	0

PROJET: W.W.T IQUALUIT

DIV.	CONTRAT	
E001	C2005-42	R1009

GUERARD METAL INC.
630, DE L'ÉGLISE, ST-ROMUALD, QUÉBEC, G6W 5M6
Tel:(418) 839-0909
Fax:(418) 839-3910
www.guerardmetal.com

CERTIFIÉ ISO 9002

DIV	GRID LOC.	ELEV.
1	A'-B'/1'	+11.793

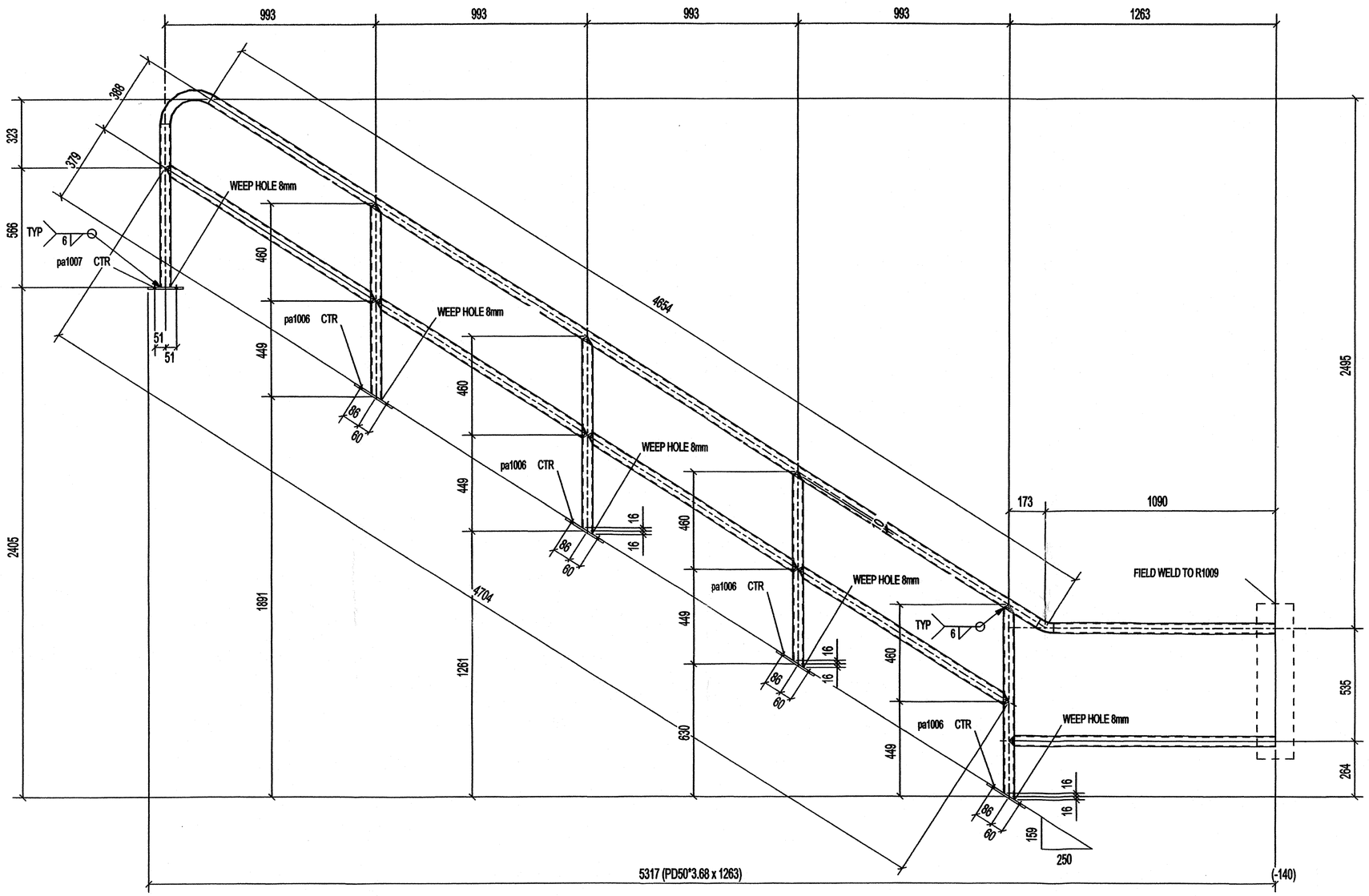

REVIEWED ACCORDING TO THE REQUIREMENTS OF THE GENERAL CONDITIONS OF THE CONTRACT. ANY ACTION INDICATED IS SUBJECT TO THESE REQUIREMENTS.

- [x] NO EXCEPTIONS TAKEN
- [ ] MAKE NOTED CORRECTIONS
- [ ] REVISE & RESUBMIT
- [ ] REJECTED

DATE JUL 11 2005 BY RR

EARTH TECH (CANADA) INC.

1 - RAIL - R1010

**11925mm TOTAL RAIL LENGHT NEEDED (GROSS)

QTE	MARQUE	DESCRIPTION	LONG.	REMARKS
1	R1010	RAIL		
1	R1010	PD50*3.68	1263	
1	ma1030	PD50*3.68	79	
4	ma1068	PD50*3.68	925	
1	ma1092	PD50*3.68	771	
1	ma1093	PD50*3.68	4614	
1	ma1094	PD50*3.68	1049	
2	ma1095	PD50*3.68	1171	
2	ma1096	PD50*3.68	1174	
1	ma1098	PD50*3.68	299	
4	pa1006	PL9X64	210	
1	pa1007	PL9X64	166	

QTE	DESCRIPTION
10	BOLT_3/8"DIA_A307_1"3/4
BOULONS DE CHANTIER	

REV.	DESCRIPTION	DATE	PAR
0	FOR APPROVAL	29-06-05	

TROUS	PEINTURE	ACIER
13/16 Ø U/N	GALVANIZED	300W U/N

DESSINER PAR	VÉRIFIER PAR	REV.
A.P. 06/28/2005	B.P.	0

PROJET W.W.T IQUALUIT

DIV.	CONTRAT	
E001	C2005-42	R1010

GUERO METAL
630, DE LÉGLISE,
ST-ROMUALD,
QUÉBEC, G6W 5M6
Tel.:(418) 839-0909
Fax:(418) 839-3010
www.guerometal.com

Joel Rheaume 100724 QUÉBEC

CERTIFIÉ ISO 9002

DIV	GRID LOC.	ELEV.
1	A'-B'/2'	+14.819

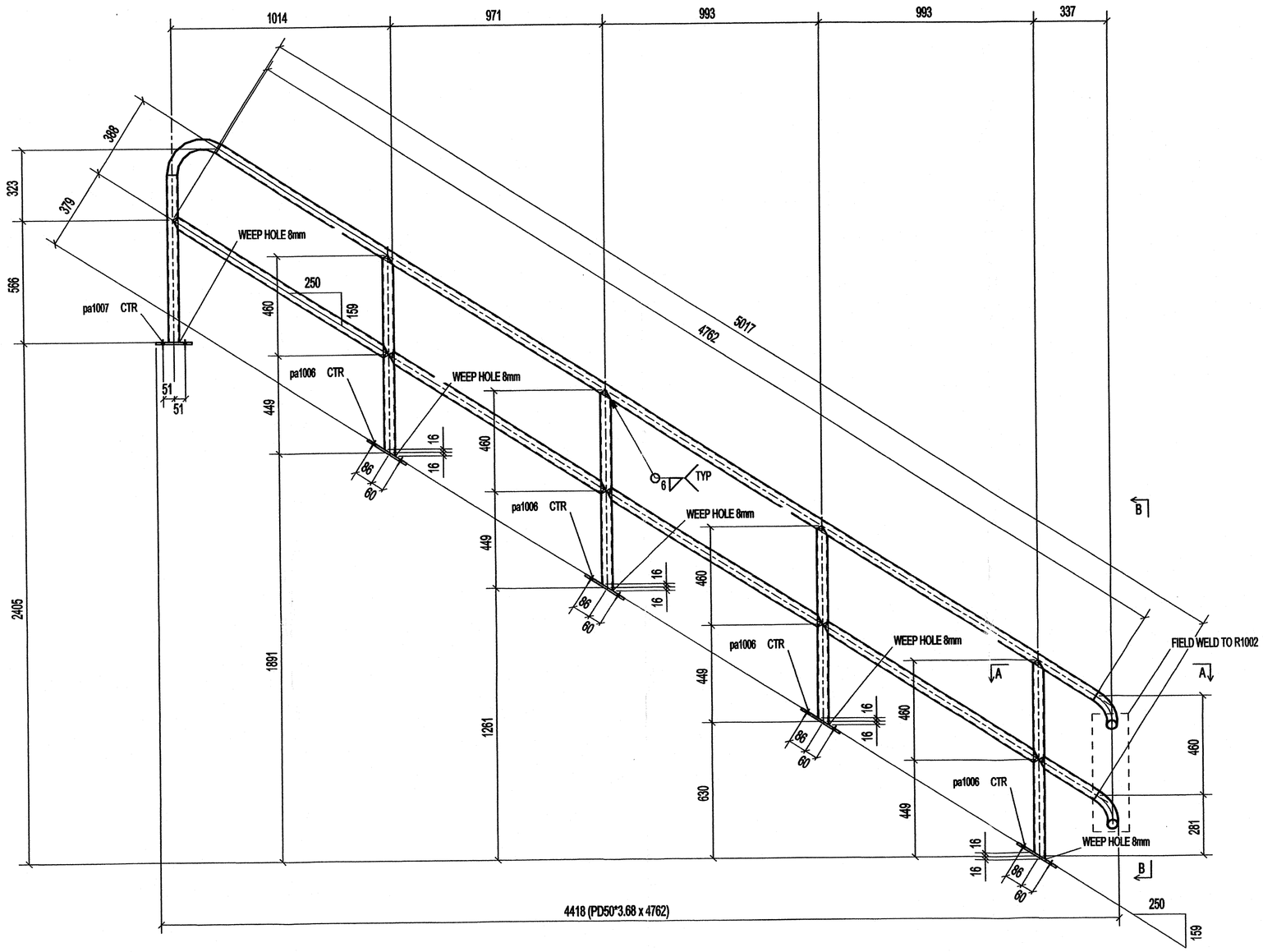

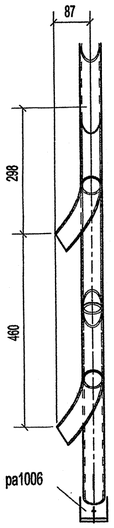

B - B

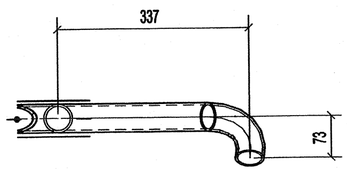

A - A

1 - RAIL - R1015

**10370mm TOTAL RAIL LENGHT NEEDED (GROSS)

QTE	MARQUE	DESCRIPTION	LONG.	REMARKS
1	R1015	RAIL		
1	R1015	PD50*3.68	4762	
4	ma1068	PD50*3.68	925	
1	ma1092	PD50*3.68	771	
3	ma1095	PD50*3.68	1171	
1	ma1096	PD50*3.68	1174	
1	ma1097	PD50*3.68	311	
1	ma1098	PD50*3.68	299	
1	ma1099	PD50*3.68	190	
1	ma1100	PD50*3.68	191	
4	pa1006	PL9X64	210	
1	pa1007	PL9X64	166	

QTE	DESCRIPTION
10	BOLT_3/8"DIA_A307_1"3/4
BOULONS DE CHANTIER	

REVIEWED ACCORDING TO THE REQUIREMENTS OF THE GENERAL CONDITIONS OF THE CONTRACT. ANY ACTION INDICATED IS SUBJECT TO THESE REQUIREMENTS.

- [x] NO EXCEPTIONS TAKEN
- [ ] MAKE NOTED CORRECTIONS
- [ ] REVISE & RESUBMIT
- [ ] REJECTED

DATE JUL 11 2005 BY RR

EARTH TECH (CANADA) INC.

Joël Rheaume 100724 QUÉBEC

REV.	DESCRIPTION	DATE	PAR
0	FOR APPROVAL	29-06-05	

TROUS	PEINTURE	ACIER
13/16 Ø U / N	GALVANIZED	300W U/N

DESSINER PAR	VERIFIER PAR	REV.
A.P. 06/28/2005	B.P.	0

PROJET W.W.T IQUALUIT

DIV.	CONTRAT	
E001	C2005-42	R1015

ROUTE DE L'ÉGLISE, ST-ROMUALD, QUÉBEC, G6W 5M6
Tel.:(418) 839-3369
Fax:(418) 839-3819
www.guerometal.com

DIV	GRID LOC.	ELEV.
1	1-2/B-A	+14.460

CERTIFIÉ ISO 9002

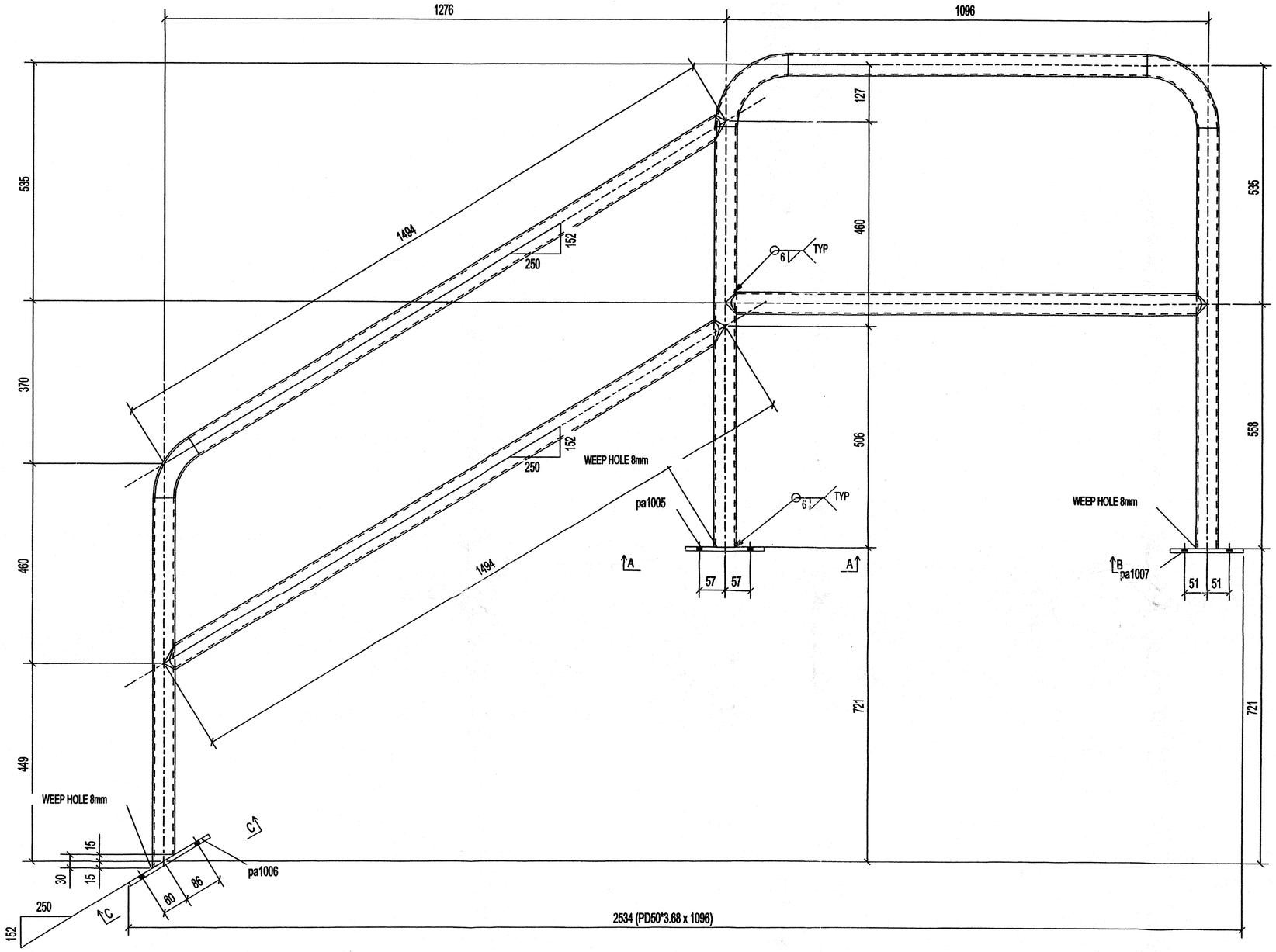

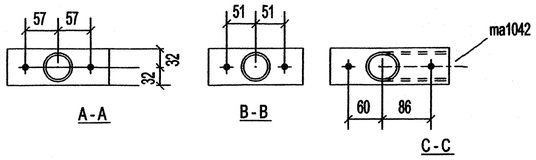

1 - RAIL - R1000

**7750mm TOTAL RAIL LENGHT NEEDED (GROSS)

QTE	MARQUE	DESCRIPTION	LONG.	REMARKS
1	R1000	RAIL		
1	R1000	PD50*3.68	1096	
1	ma1032	PD50*3.68	816	
1	ma1042	PD50*3.68	846	
2	ma1047	PD50*3.68	953	
1	ma1082	PD50*3.68	1416	
1	ma1084	PD50*3.68	1494	
2	ma1104	PD50*3.68	220	
1	ma1105	PD50*3.68	143	
1	pa1005	PL9X64	178	
1	pa1006	PL9X64	210	
1	pa1007	PL9X64	166	

6	BOLT_3/8"DIA_A307_1"3/4
QTE	DESCRIPTION
BOULONS DE CHANTIER	

REVIEWED ACCORDING TO THE REQUIREMENTS OF THE GENERAL CONDITIONS OF THE CONTRACT. ANY ACTION INDICATED IS SUBJECT TO THESE REQUIREMENTS.
- ☑ NO EXCEPTIONS TAKEN
- ☐ MAKE NOTED CORRECTIONS
- ☐ REVISE & RESUBMIT
- ☐ REJECTED

DATE JUL 11 2005 BY
EARTH TECH (CANADA) INC.

KUDLIK CONSTRUCTION LTD
P.O. BOX 727, 1519 FEDERAL ROAD
IQUALUIT, NUNAVUT X0A 0H0
PHONE: (867) 979-1166
FAX: (867) 979-1169

Joel Rhéaume 100724 QUÉBEC

REV.	DESCRIPTION	DATE	PAR
0	FOR APPROVAL	29-06-05	

TROUS	PEINTURE	ACIER
13/16 Ø U/N	GALVANIZED	300W U/N

DESSINER PAR	VERIFIER PAR	REV.
A.P. 06/28/2005	B.P.	0

PROJET: W.W.T IQUALUIT

DIV.	CONTRAT	
E001	C2005-42	R1000

QUEBEC METAL
800, DE ÉCOSSE,
ST-ROMUALD,
QUÉBEC, G6W 5M6
Tel.(418) 839-0559
Fax.(418) 839-3910
www.quebecmetal.com

CERTIFIÉ ISO 9002

DIV	GRID LOC.	ELEV.
1	2-4/B-A	+13.725

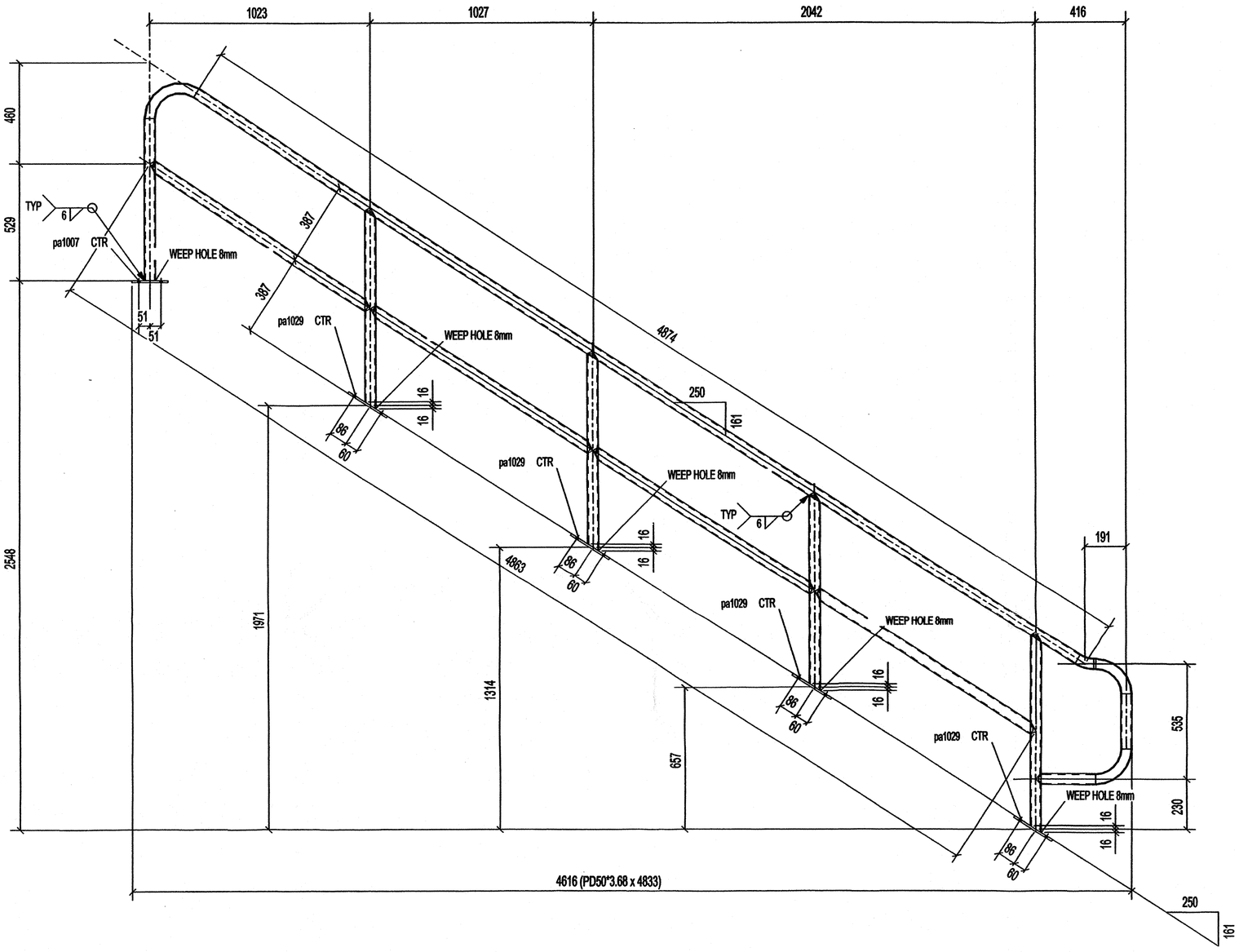

1 - RAIL - R1001

**12435mm TOTAL RAIL LENGHT NEEDED (GROSS)

QTE	MARQUE	DESCRIPTION	LONG.	REMARKS
1	R1001	RAIL		
1	R1001	PD50*3.68	4833	
1	ma1110	PD50*3.68	733	
1	ma1112	PD50*3.68	10	
1	ma1113	PD50*3.68	255	
2	ma1116	PD50*3.68	1213	
2	ma1117	PD50*3.68	1211	
1	ma1119	PD50*3.68	276	
4	ma1120	PD50*3.68	925	
2	ma1123	PD50*3.68	220	
1	ma1124	PD50*3.68	300	
1	ma1125	PD50*3.68	80	
1	pa1007	PL9X64	166	
4	pa1029	PL9X64	210	

QTE	DESCRIPTION
10	BOLT_3/8"DIA_A307_1"3/4
BOULONS DE CHANTIER	

REVIEWED ACCORDING TO THE REQUIREMENTS OF THE GENERAL CONDITIONS OF THE CONTRACT. ANY ACTION INDICATED IS SUBJECT TO THESE REQUIREMENTS.

- [x] NO EXCEPTIONS TAKEN
- [ ] MAKE NOTED CORRECTIONS
- [ ] REVISE & RESUBMIT
- [ ] REJECTED

DATE JUL 11 2005 BY

EARTH TECH (CANADA) INC.

Jessi Rheaume 100724 QUÉBEC

REV.	DESCRIPTION	DATE	PAR
0	FOR APPROVAL	29-06-05	

TROUS	PEINTURE	ACIER
13/16 Ø U/N	GALVANIZED	300W U/N

DESSINER PAR	VÉRIFIER PAR	REV.
A.P. 06/29/2005	B.P.	0

PROJET: W.W.T IQUALUIT

DIV.	CONTRAT	
E001	C2005-42	R1001

EUEAD METAL
830, DE L'ÉGLISE,
ST-ROMUALD,
QUÉBEC, G6W 5M6
Tel.(418) 839-2000
Fax:(418) 839-3810
www.queadmetal.com

DIV	GRID LOC.	ELEV.
1	A'-B'/2'-3'	+12.132

CERTIFIÉ ISO 9002

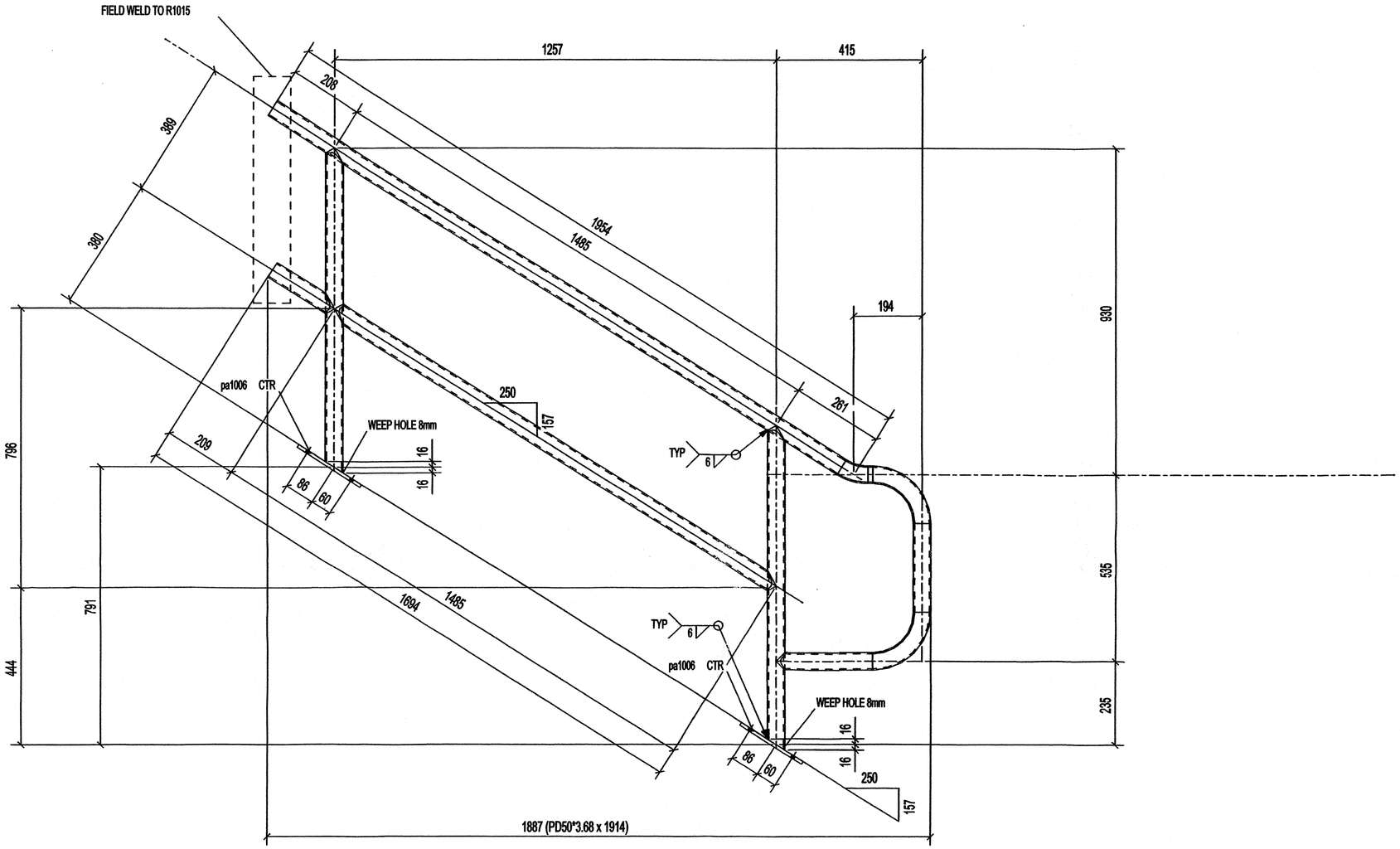

REVIEWED ACCORDING TO THE REQUIREMENTS OF THE GENERAL CONDITIONS OF THE CONTRACT. ANY ACTION INDICATED IS SUBJECT TO THESE REQUIREMENTS.

☑ NO EXCEPTIONS TAKEN
☐ MAKE NOTED CORRECTIONS
☐ REVISE & RESUBMIT
☐ REJECTED

DATE JUL 11 2005 BY PCR

EARTH TECH (CANADA) INC.

1 - RAIL - R1002

**5800mm TOTAL RAIL LENGHT NEEDED (GROSS)

QTE	MARQUE	DESCRIPTION	LONG.	REMARKS
1	R1002	RAIL		
1	R1002	PD50*3.68	1914	
2	ma1029	PD50*3.68	220	
1	ma1030	PD50*3.68	79	
1	ma1033	PD50*3.68	14	
1	ma1034	PD50*3.68	255	
1	ma1035	PD50*3.68	275	
1	ma1036	PD50*3.68	1483	
2	ma1068	PD50*3.68	925	
1	ma1069	PD50*3.68	206	
2	pa1006	PL9X64	210	

QTE	DESCRIPTION
4	BOLT_3/8"DIA_A307_1"3/4
BOULONS DE CHANTIER	

Joël Rhéaume 100724 INGÉNIEUR QUÉBEC

REV.	DESCRIPTION	DATE	PAR
0	FOR APPROVAL	29-06-05	

TROUS 13/16 Ø U/N	PEINTURE GALVANIZED	ACIER 300W U/N	
DESSINÉ PAR A.P. 06/28/2005	VÉRIFIÉ PAR B.P.	REV. 0	

QUEBEC METAL
609, DE L'ÉGLISE, ST-ROMUALD, QUÉBEC, G6W 5M6
Tel.:(418) 839-6929
Fax:(418) 839-3919
www.quebecmetal.com

PROJET W.W.T IQUALUIT

DIV.	CONTRAT	
E001	C2005-42	R1002

CERTIFIÉ ISO 9002

DIV	GRID LOC.	ELEV.
1	3-4/B-A>	+13.971

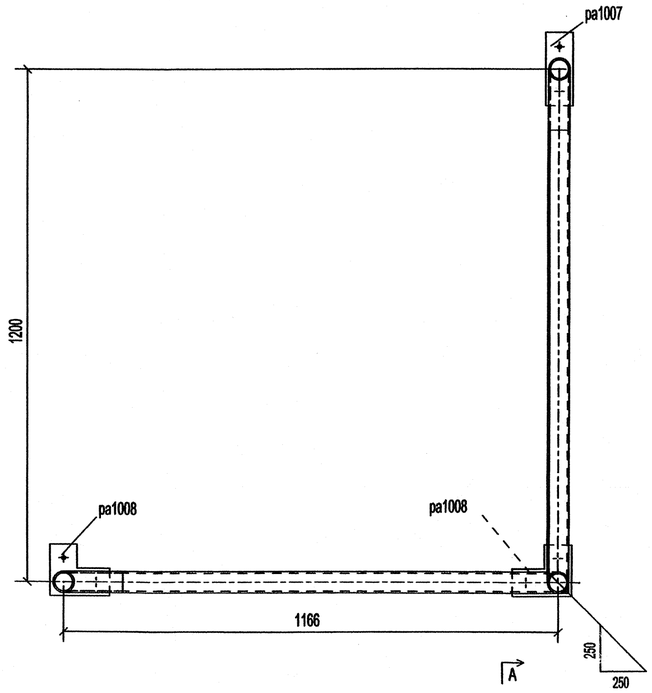

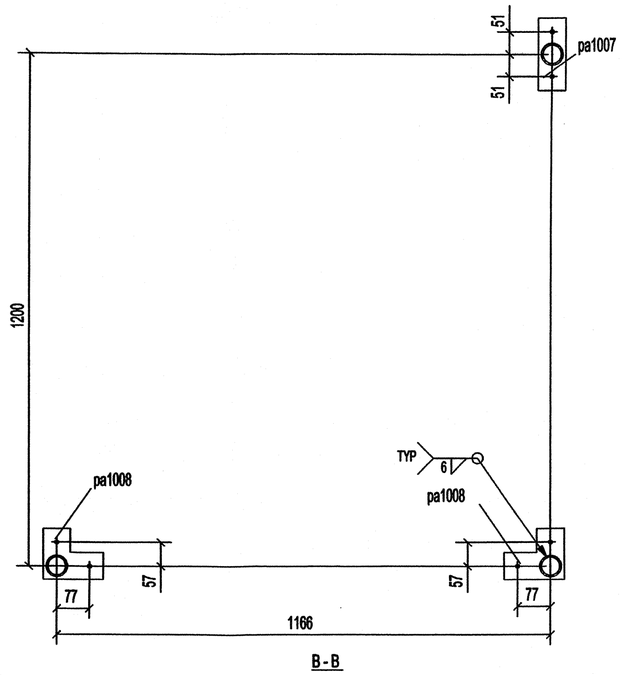

B - B

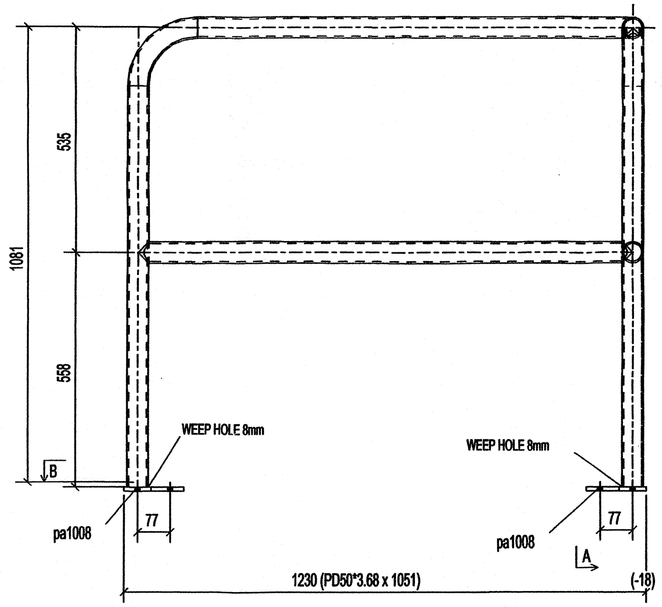

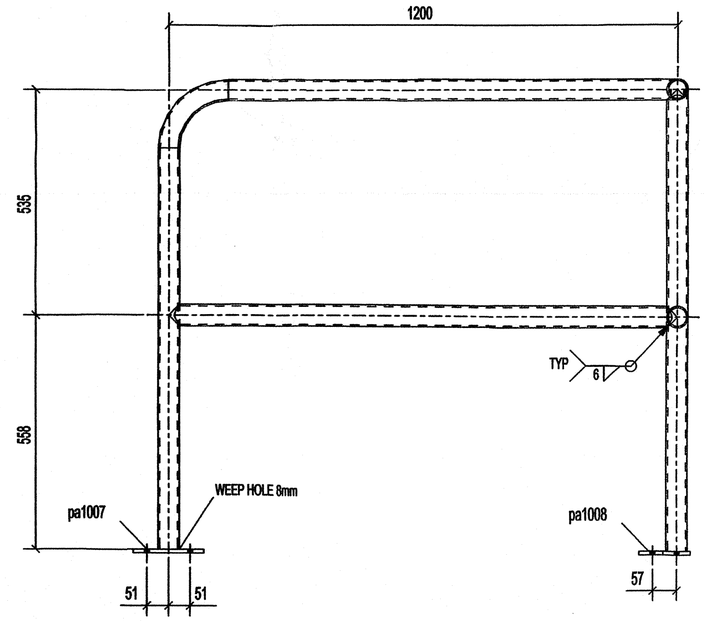

A - A

REVIEWED ACCORDING TO THE REQUIREMENTS OF THE GENERAL CONDITIONS OF THE CONTRACT. ANY ACTION INDICATED IS SUBJECT TO THESE REQUIREMENTS.

- [x] NO EXCEPTIONS TAKEN
- [ ] MAKE NOTED CORRECTIONS
- [ ] REVISE & RESUBMIT
- [ ] REJECTED

DATE JUL 11 2005 BY

EARTH TECH (CANADA) INC.

Joël Rhéaume 100724 Québec

1 - RAIL - R1003

**7275mm TOTAL RAIL LENGHT NEEDED (GROSS)

QTE	MARQUE	DESCRIPTION	LONG.	REMARKS
1	R1003	RAIL		
1	R1003	PD50*3.68	1051	
1	ma1031	PD50*3.68	1093	
1	ma1044	PD50*3.68	1166	
2	ma1047	PD50*3.68	953	
1	ma1111	PD50*3.68	1085	
1	ma1115	PD50*3.68	1200	
2	ma1123	PD50*3.68	220	
1	pa1007	PL9X64	166	
2	pa1008	PL9X120.5	141	

QTE	DESCRIPTION
6	BOLT_3/8"DIA_A307_1"3/4
BOULONS DE CHANTIER	

GUERO METAL
ROUTE DE L'ÉGLISE, ST-ROMUALD, QUÉBEC, G6W 5M6
Tel.:(418) 839-0989
Fax:(418) 839-3189
www.guerometal.com

REV.	DESCRIPTION	DATE	PAR
0	FOR APPROVAL	29-06-05	

TROUS	PEINTURE	ACIER
13/16 Ø U/N	GALVANIZED	300W U/N

DESSINER PAR	VÉRIFIER PAR	REV.
A.P. 06/28/2005	B.P.	0

PROJET W.W.T IQUALUIT

DIV.	CONTRAT	
E001	C2005-42	R1003

CERTIFIÉ ISO 9002

DIV	GRID LOC.	ELEV.
1	1-2/B-A	+14.460

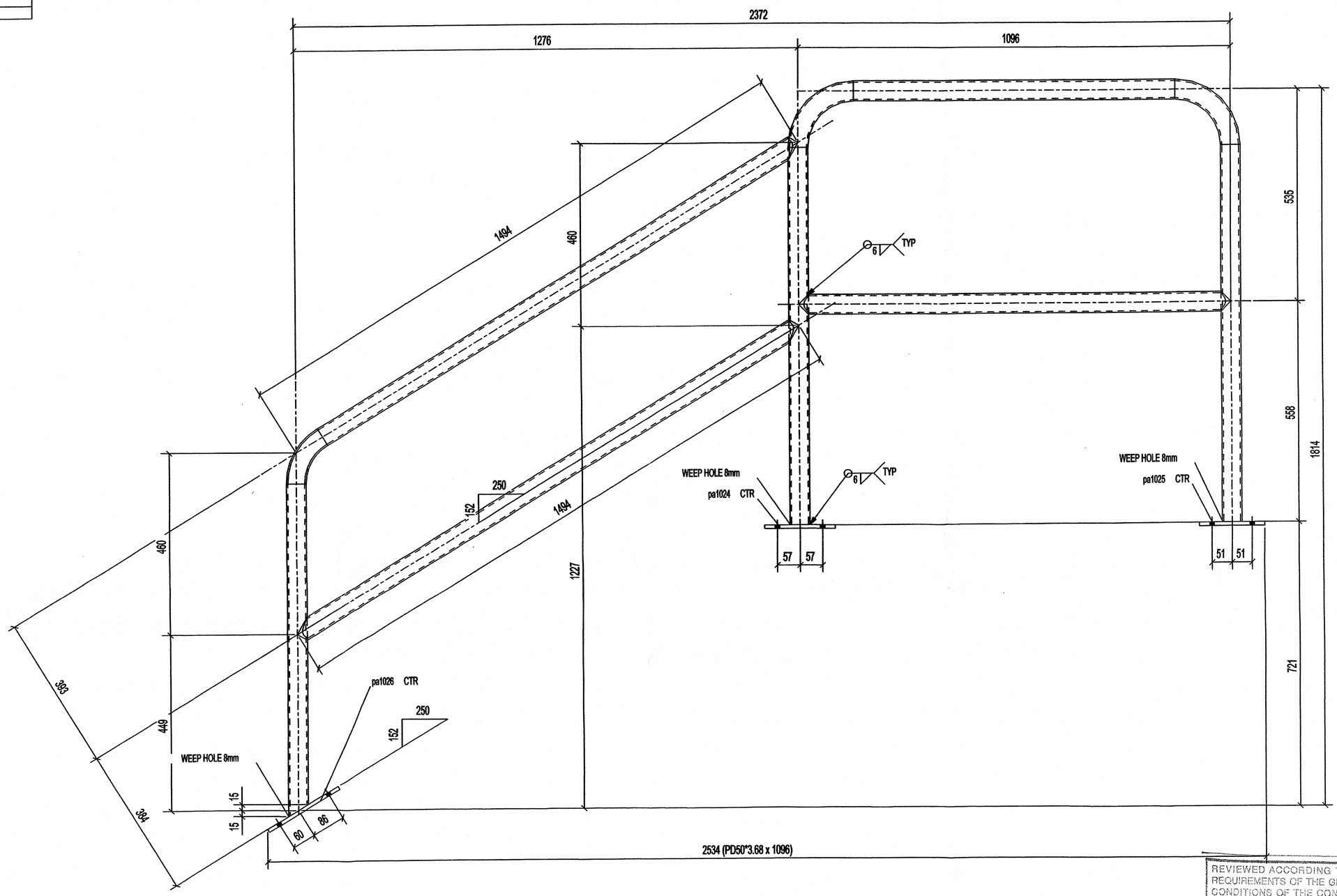

1 - RAIL - R1004

**7740mm TOTAL RAIL LENGHT NEEDED (GROSS)

QTE	MARQUE	DESCRIPTION	LONG.	REMARKS
1	R1004	RAIL		
1	R1004	PD50*3.68	1096	
1	ma1032	PD50*3.68	816	
2	ma1047	PD50*3.68	953	
1	ma1081	PD50*3.68	846	
1	ma1082	PD50*3.68	1416	
1	ma1084	PD50*3.68	1494	
2	ma1104	PD50*3.68	220	
1	ma1105	PD50*3.68	143	
1	pa1024	PL9X64	178	
1	pa1025	PL9X64	166	
1	pa1026	PL9X64	210	

QTE	DESCRIPTION
6	BOLT_3/8"DIA_A307_1"3/4
BOULONS DE CHANTIER	

REVIEWED ACCORDING TO THE REQUIREMENTS OF THE GENERAL CONDITIONS OF THE CONTRACT. ANY ACTION INDICATED IS SUBJECT TO THESE REQUIREMENTS.

- [x] NO EXCEPTIONS TAKEN
- [ ] MAKE NOTED CORRECTIONS
- [ ] REVISE & RESUBMIT
- [ ] REJECTED

DATE JUL 11 2005 BY RR

EARTH TECH (CANADA) INC.

Joël Rhéaume 100724 QUÉBEC

REV.	DESCRIPTION	DATE	PAR
0	FOR APPROVAL	29-06-05	

TROUS	PEINTURE	ACIER
13/16 Ø U/N	GALVANIZED	300W U/N

DESSINER PAR	VÉRIFIER PAR	REV.
A.P. 06/29/2005	B.P.	0

PROJET: W.W.T IQUALUIT

DIV.	CONTRAT	
E001	C2005-42	R1004

GUERO METAL INC.
BOUL DE L'ÉGLISE, ST-ROMUALD, QUÉBEC, G6W 5M6
Tel.(418) 839-0999
Fax(418) 839-7819
www.guerometal.com

DIV	GRID LOC.	ELEV.
1	2-4/A>	+13.856

CERTIFIÉ ISO 9002

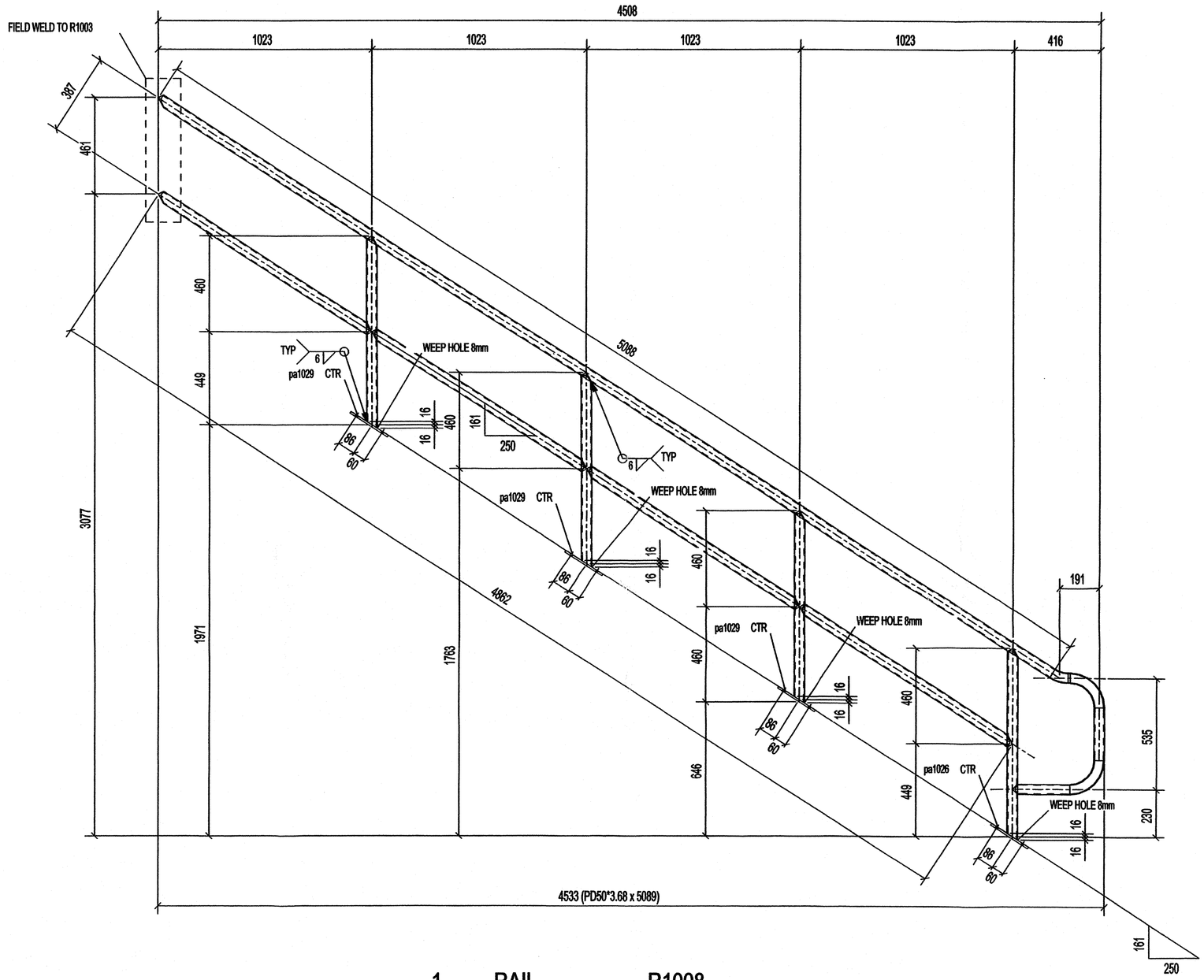

REVIEWED ACCORDING TO THE REQUIREMENTS OF THE GENERAL CONDITIONS OF THE CONTRACT. ANY ACTION INDICATED IS SUBJECT TO THESE REQUIREMENTS.

☑ NO EXCEPTIONS TAKEN
☐ MAKE NOTED CORRECTIONS
☐ REVISE & RESUBMIT
☐ REJECTED

DATE JUL 11 2005 BY RR
EARTH TECH (CANADA) INC.

1 - RAIL - R1008

**9900mm TOTAL RAIL LENGHT NEEDED (GROSS)

QTE	MARQUE	DESCRIPTION	LONG.	REMARKS
1	R1008	RAIL		
1	R1008	PD50*3.68	5089	
1	ma1112	PD50*3.68	10	
1	ma1113	PD50*3.68	255	
2	ma1116	PD50*3.68	1213	
2	ma1117	PD50*3.68	1211	
1	ma1119	PD50*3.68	276	
4	ma1120	PD50*3.68	925	
2	ma1123	PD50*3.68	220	
1	ma1125	PD50*3.68	80	
1	pa1026	PL9X64	210	
3	pa1029	PL9X64	210	

QTE	DESCRIPTION
8	BOLT_3/8"DIA_A307_1"3/4
BOULONS DE CHANTIER	

Joël Rhéaume 100724 QUÉBEC

REV.	DESCRIPTION	DATE	PAR
0	FOR APPROVAL	29-06-05	

TROUS	PEINTURE	ACIER
13/16 Ø U / N	GALVANIZED	300W U/N

DESSINER PAR	VERIFIER PAR	REV.
A.P. 06/29/2005	B.P.	0

PROJET: W.W.T IQUALUIT

DIV.	CONTRAT	
E001	C2005-42	R1008

GUERARD METAL
100, DE L'ÉGLISE, ST-ROMUALD, QUÉBEC, G6W 5M6
Tel: (418) 839-2999
Fax: (418) 839-3810
www.guerardmetal.com

CERTIFIÉ ISO 9002

DIV	GRID LOC.	ELEV.
1	A'-B'/2'	+13.900

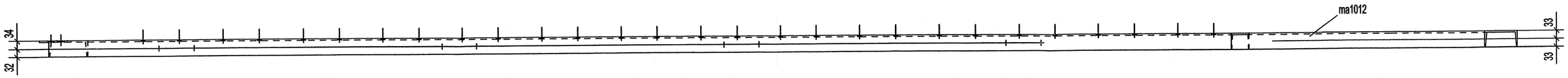

PLEASE PROVIDE END CONNECTION

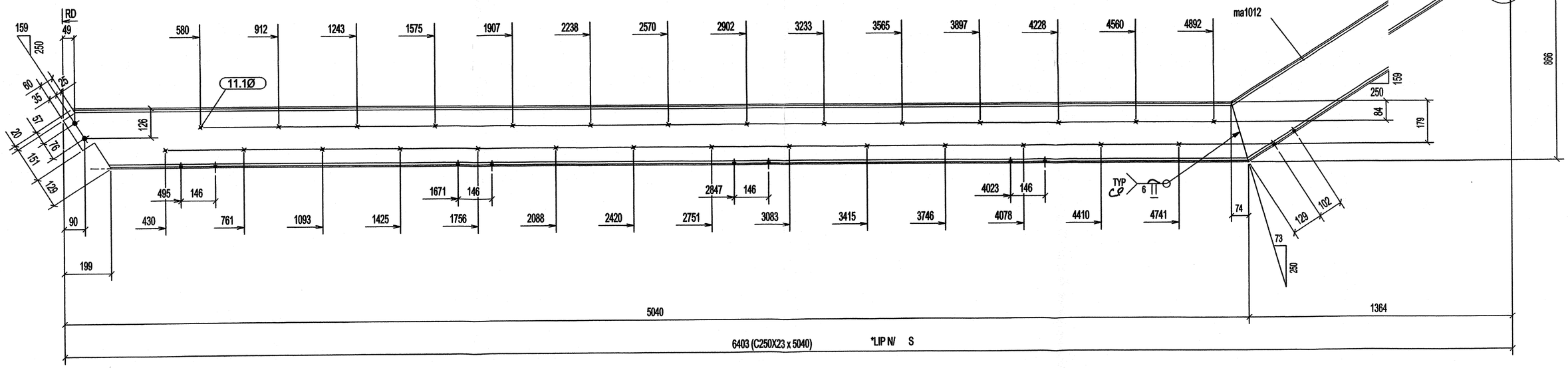

HOLD

REVIEWED ACCORDING TO THE REQUIREMENTS OF THE GENERAL CONDITIONS OF THE CONTRACT. ANY ACTION INDICATED IS SUBJECT TO THESE REQUIREMENTS.

- [x] NO EXCEPTIONS TAKEN
- [ ] MAKE NOTED CORRECTIONS
- [ ] REVISE & RESUBMIT
- [ ] REJECTED

DATE JUL 11 2005 BY

EARTH TECH (CANADA) INC.

Ingénieur technicien Joël Rhéaume 100724 Québec

1 - STRINGE - M1012

QTE	MARQUE	DESCRIPTION	LONG.	REMARKS
1	M1012	STRINGER		
1	M1012	C250X23	5040	
1	ma1012	C250X23	1616	

QTE	DESCRIPTION
2	BOLT_3/4"DIA_A307_1"3/4
BOULONS DE CHANTIER	

REV.	DESCRIPTION	DATE	PAR
0	FOR APPROVAL	29-06-05	

EUCAN METAL WORKS
830, DE L'ÉGLISE, ST-HUBERT, QUÉBEC, J3Y 5W6
Tel.:(450) 659-0959
Fax:(450) 659-3810
www.eucanmetal.com

TROUS	PEINTURE	ACIER
13/16 Ø U/N	GALVANIZED	300W U/N

DESSINER PAR	VÉRIFIER PAR	REV.
A.P. 06/28/2005	B.P.	0

PROJET: W.W.T IQUALUIT

DIV.	CONTRAT	
E001	C2005-42	M1012

DIV	GRID LOC.	ELEV.
1	A/2'-3'	+12.303

CERTIFIÉ ISO 9002

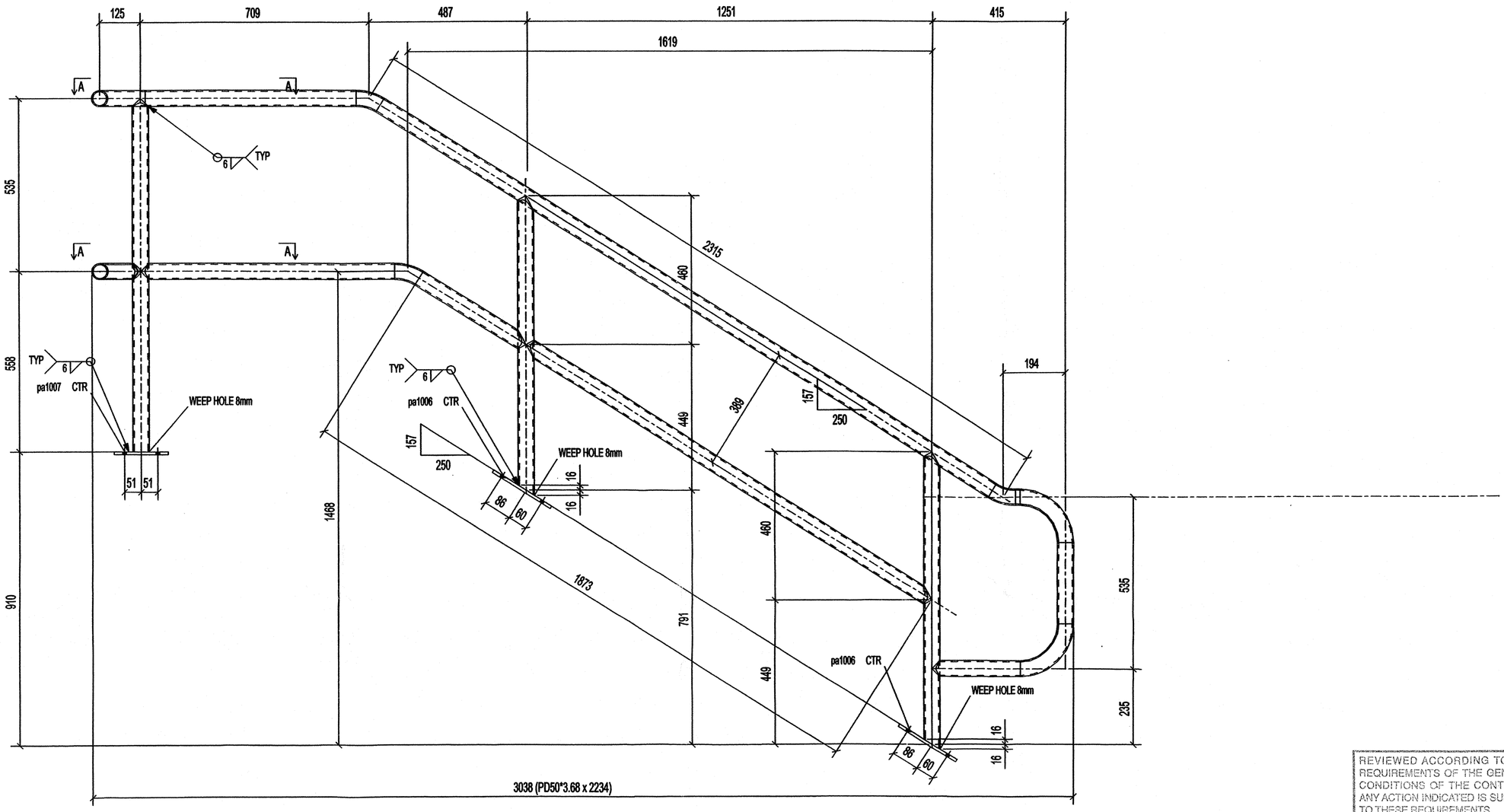

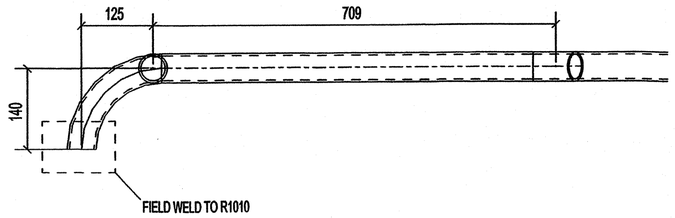

A - A

1 - RAIL - R1009

**9180mm TOTAL RAIL LENGHT NEEDED (GROSS)

QTE	MARQUE	DESCRIPTION	LONG.	REMARKS
1	R1009	RAIL		
1	R1009	PD50*3.68	2234	
3	ma1029	PD50*3.68	220	
3	ma1030	PD50*3.68	79	
1	ma1033	PD50*3.68	14	
1	ma1034	PD50*3.68	255	
1	ma1035	PD50*3.68	275	
1	ma1036	PD50*3.68	1483	
1	ma1037	PD50*3.68	386	
1	ma1038	PD50*3.68	786	
1	ma1039	PD50*3.68	654	
1	ma1066	PD50*3.68	1093	
2	ma1068	PD50*3.68	925	
1	ma1080	PD50*3.68	200	
2	pa1006	PL9X64	210	
1	pa1007	PL9X64	166	

QTE	DESCRIPTION
6	BOLT_3/8"DIA_A307_1"3/4
BOULONS DE CHANTIER	

REVIEWED ACCORDING TO THE REQUIREMENTS OF THE GENERAL CONDITIONS OF THE CONTRACT. ANY ACTION INDICATED IS SUBJECT TO THESE REQUIREMENTS.

- [x] NO EXCEPTIONS TAKEN
- [ ] MAKE NOTED CORRECTIONS
- [ ] REVISE & RESUBMIT
- [ ] REJECTED

DATE JUL 11 2005 BY RR
EARTH TECH (CANADA) INC.

Joel Rheaume 100724 QUÉBEC

REV.	DESCRIPTION	DATE	PAR
0	FOR APPROVAL	29-06-05	

TROUS	PEINTURE	ACIER
13/16 Ø U/N	GALVANIZED	300W U/N

DESSINER PAR	VERIFIER PAR	REV.
A.P. 06/28/2005	B.P.	0

PROJET: W.W.T IQUALUIT

DIV.	CONTRAT	
E001	C2005-42	R1009

GUERARD METAL INC.
630, DE L'ÉGLISE, ST-ROMUALD, QUÉBEC, G6W 5M6
Tel:(418) 839-0909
Fax:(418) 839-3910
www.guerardmetal.com

CERTIFIÉ ISO 9002

DIV	GRID LOC.	ELEV.
1	A'-B'/1'	+11.793

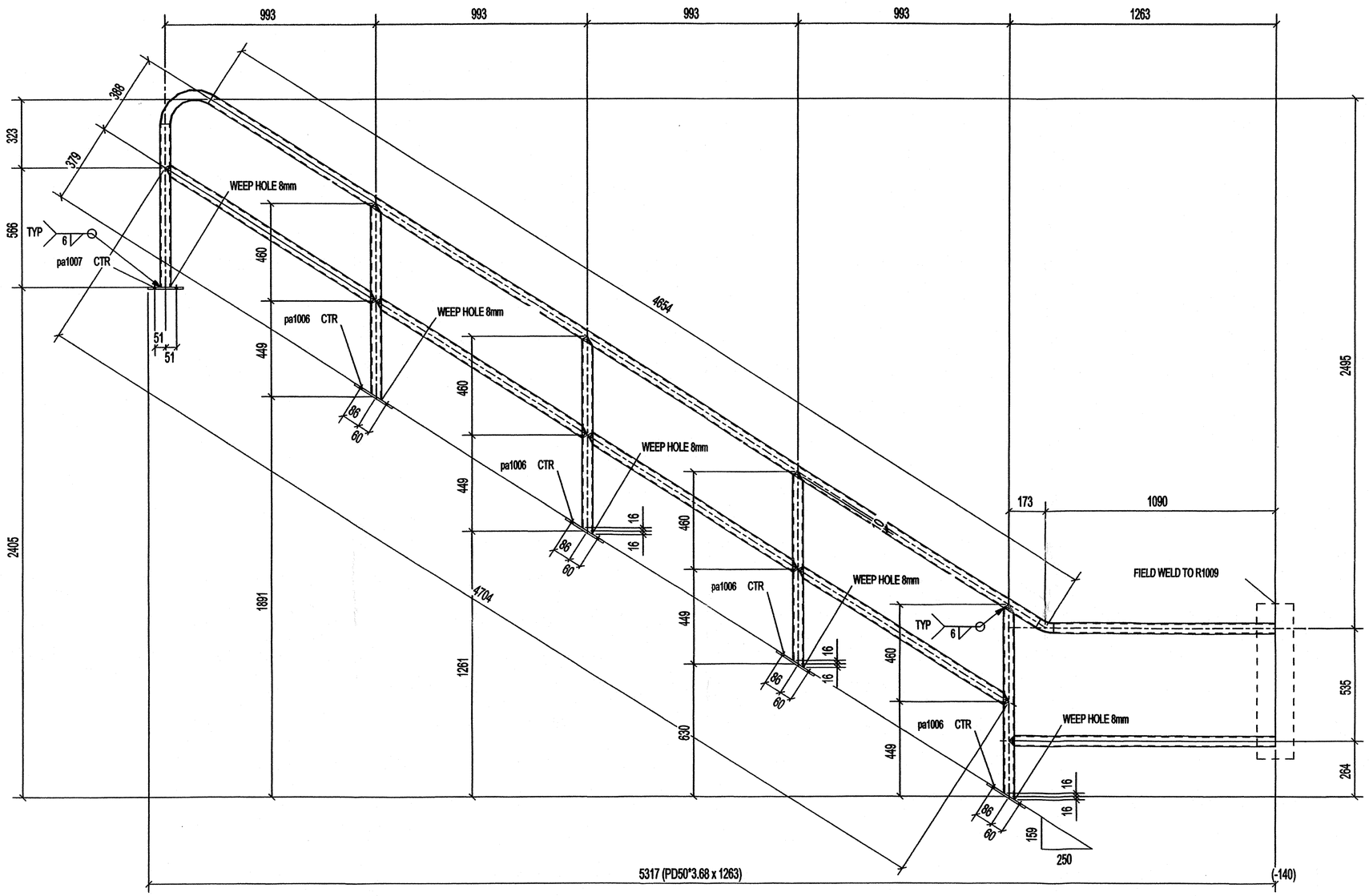

REVIEWED ACCORDING TO THE REQUIREMENTS OF THE GENERAL CONDITIONS OF THE CONTRACT. ANY ACTION INDICATED IS SUBJECT TO THESE REQUIREMENTS.

- [x] NO EXCEPTIONS TAKEN
- [ ] MAKE NOTED CORRECTIONS
- [ ] REVISE & RESUBMIT
- [ ] REJECTED

DATE JUL 11 2005 BY RR

EARTH TECH (CANADA) INC.

1 - RAIL - R1010

**11925mm TOTAL RAIL LENGHT NEEDED (GROSS)

QTE	MARQUE	DESCRIPTION	LONG.	REMARKS
1	R1010	RAIL		
1	R1010	PD50*3.68	1263	
1	ma1030	PD50*3.68	79	
4	ma1068	PD50*3.68	925	
1	ma1092	PD50*3.68	771	
1	ma1093	PD50*3.68	4614	
1	ma1094	PD50*3.68	1049	
2	ma1095	PD50*3.68	1171	
2	ma1096	PD50*3.68	1174	
1	ma1098	PD50*3.68	299	
4	pa1006	PL9X64	210	
1	pa1007	PL9X64	166	

QTE	DESCRIPTION
10	BOLT_3/8"DIA_A307_1"3/4
BOULONS DE CHANTIER	

REV.	DESCRIPTION	DATE	PAR
0	FOR APPROVAL	29-06-05	

TROUS	PEINTURE	ACIER
13/16 Ø U/N	GALVANIZED	300W U/N

DESSINER PAR	VÉRIFIER PAR	REV.
A.P. 06/28/2005	B.P.	0

PROJET W.W.T IQUALUIT

DIV.	CONTRAT	
E001	C2005-42	R1010

GUERO METAL
630, DE LÉGLISE,
ST-ROMUALD,
QUÉBEC, G6W 5M6
Tel.:(418) 839-0909
Fax:(418) 839-3010
www.guerometal.com

Joel Rheaume 100724 QUÉBEC

CERTIFIÉ ISO 9002

DIV	GRID LOC.	ELEV.
1	A'-B'/2'	+14.819

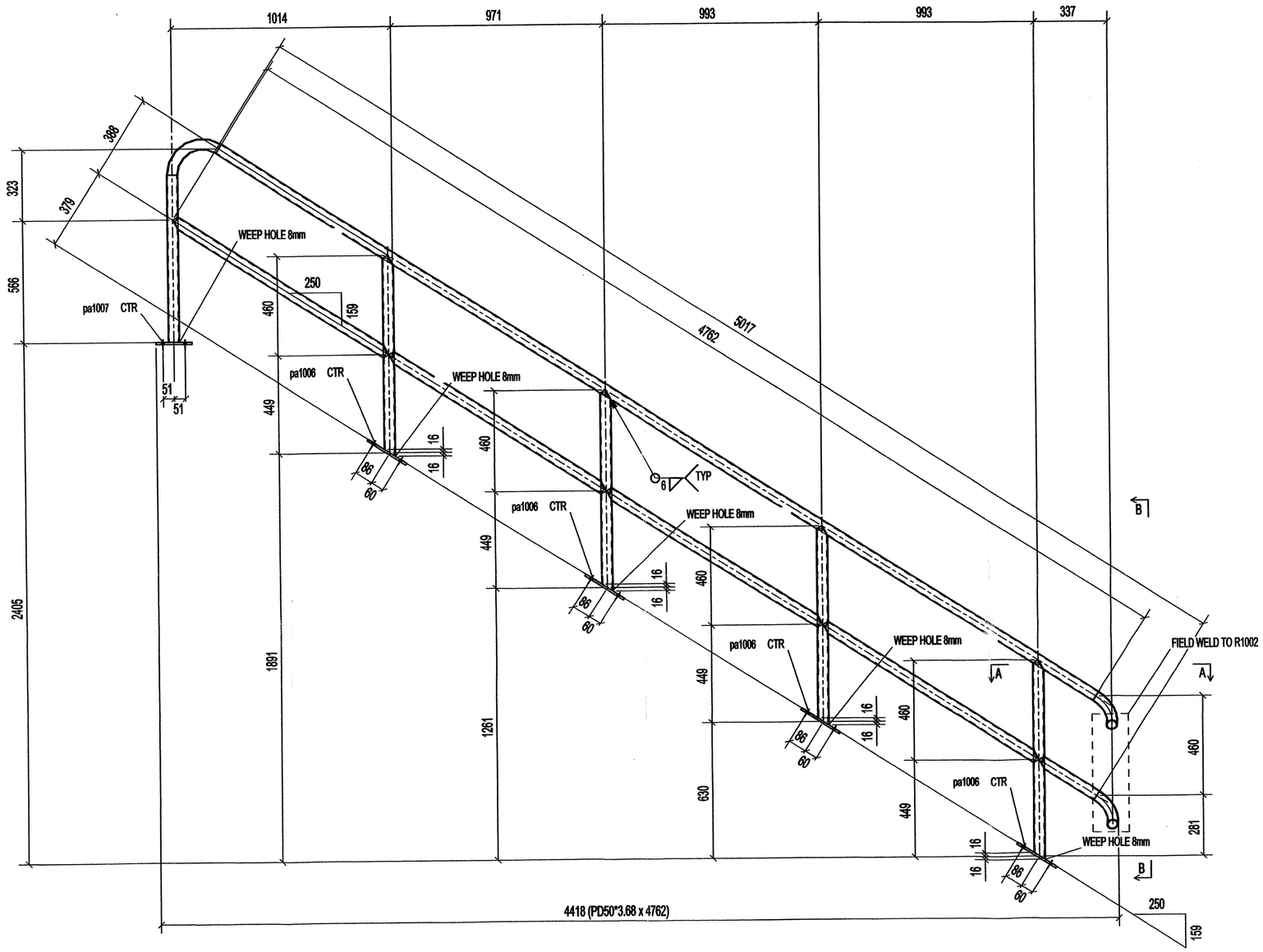

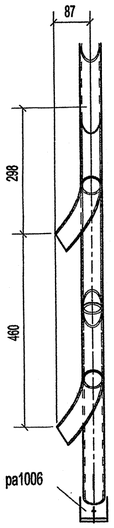

B - B

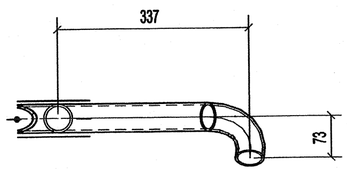

A - A

1 - RAIL - R1015

**10370mm TOTAL RAIL LENGHT NEEDED (GROSS)

QTE	MARQUE	DESCRIPTION	LONG.	REMARKS
1	R1015	RAIL		
1	R1015	PD50*3.68	4762	
4	ma1068	PD50*3.68	925	
1	ma1092	PD50*3.68	771	
3	ma1095	PD50*3.68	1171	
1	ma1096	PD50*3.68	1174	
1	ma1097	PD50*3.68	311	
1	ma1098	PD50*3.68	299	
1	ma1099	PD50*3.68	190	
1	ma1100	PD50*3.68	191	
4	pa1006	PL9X64	210	
1	pa1007	PL9X64	166	

QTE	DESCRIPTION
10	BOLT_3/8"DIA_A307_1"3/4
BOULONS DE CHANTIER	

REVIEWED ACCORDING TO THE REQUIREMENTS OF THE GENERAL CONDITIONS OF THE CONTRACT. ANY ACTION INDICATED IS SUBJECT TO THESE REQUIREMENTS.

- [x] NO EXCEPTIONS TAKEN
- [ ] MAKE NOTED CORRECTIONS
- [ ] REVISE & RESUBMIT
- [ ] REJECTED

DATE JUL 11 2005 BY RR

EARTH TECH (CANADA) INC.

Joël Rheaume 100724 QUÉBEC

REV.	DESCRIPTION	DATE	PAR
0	FOR APPROVAL	29-06-05	

TROUS	PEINTURE	ACIER
13/16 Ø U / N	GALVANIZED	300W U/N

DESSINER PAR	VERIFIER PAR	REV.
A.P. 06/28/2005	B.P.	0

PROJET W.W.T IQUALUIT

DIV.	CONTRAT	
E001	C2005-42	R1015

ROUTE DE L'ÉGLISE, ST-ROMUALD, QUÉBEC, G6W 5M6
Tel.:(418) 839-3369
Fax:(418) 839-3819
www.guerometal.com

DIV	GRID LOC.	ELEV.
1	A'-B'/1'	+13.900

CERTIFIÉ ISO 9002

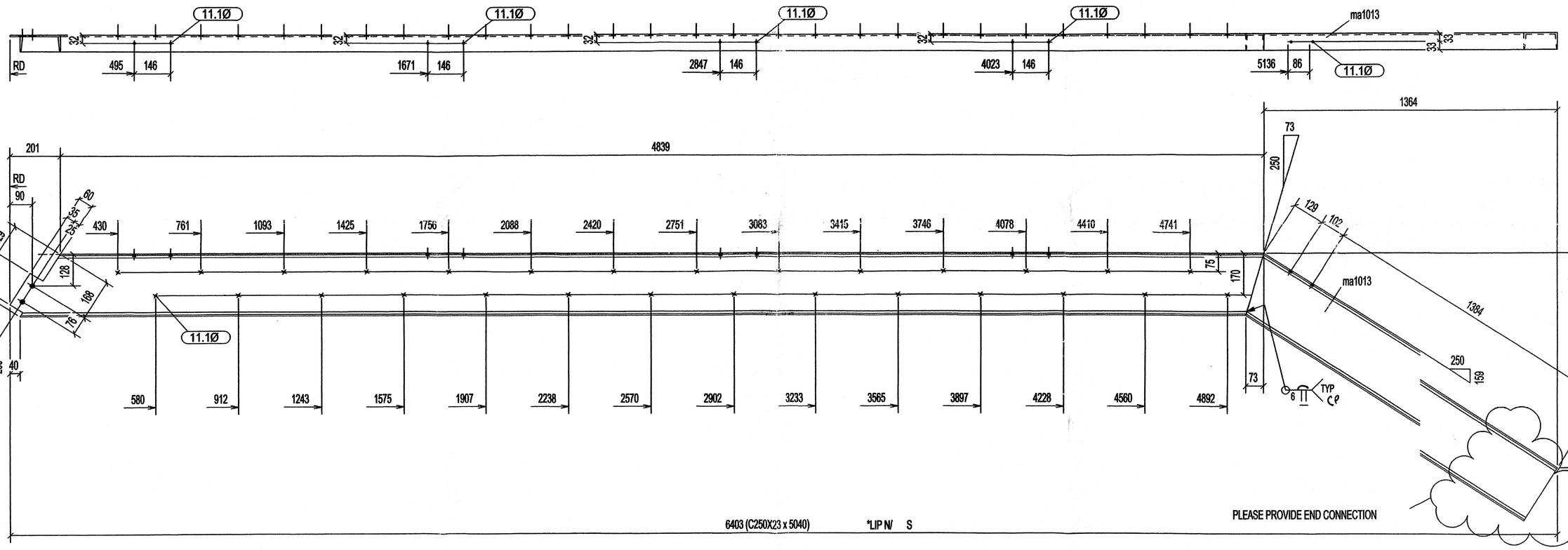

HOLD

REVIEWED ACCORDING TO THE REQUIREMENTS OF THE GENERAL CONDITIONS OF THE CONTRACT. ANY ACTION INDICATED IS SUBJECT TO THESE REQUIREMENTS.

- [x] NO EXCEPTIONS TAKEN
- [ ] MAKE NOTED CORRECTIONS
- [ ] REVISE & RESUBMIT
- [ ] REJECTED

DATE JUL 11 2005 BY
EARTH TECH (CANADA) INC.

KUDLIK CONSTRUCTION LTD
P.O. BOX 727, 1519 FEDERAL ROAD
IQUALUIT, NUNAVUT X0A 0H0
PHONE: (867) 979-1166
FAX: (867) 979-1169

Joël Rhéaume
100734
QUÉBEC

1 - STRINGE - M1003

QTE	MARQUE	DESCRIPTION	LONG.	REMARKS
1	M1003	STRINGER		
1	M1003	C250X23	5940	
1	ma1013	C250X23	1616	

QTE	DESCRIPTION
2	BOLT_3/4"DIA_A307_1"3/4
BOULONS DE CHANTIER	

REV.	DESCRIPTION	DATE	PAR
0	FOR APPROVAL	29-06-05	

TROUS	PEINTURE	ACIER
13/16 Ø U / N	GALVANIZED	300W U/N

DESSINER PAR	VERIFIER PAR	REV.
A.P. 06292005	B.P.	0

GUERARD METAL
600, RUE L'ÉGLISE,
ST-ROMUALD,
QUÉBEC, G6W 5M6
Tel: (418) 839-0999
Fax: (418) 839-3810
www.guerardmetal.com

PROJET: W.W.T IQUALUIT

DIV.	CONTRAT	
E001	C2005-42	M1003

CERTIFIÉ ISO 9002

DIV	GRID LOC.	ELEV.
1	2-4/B-A	+12.844

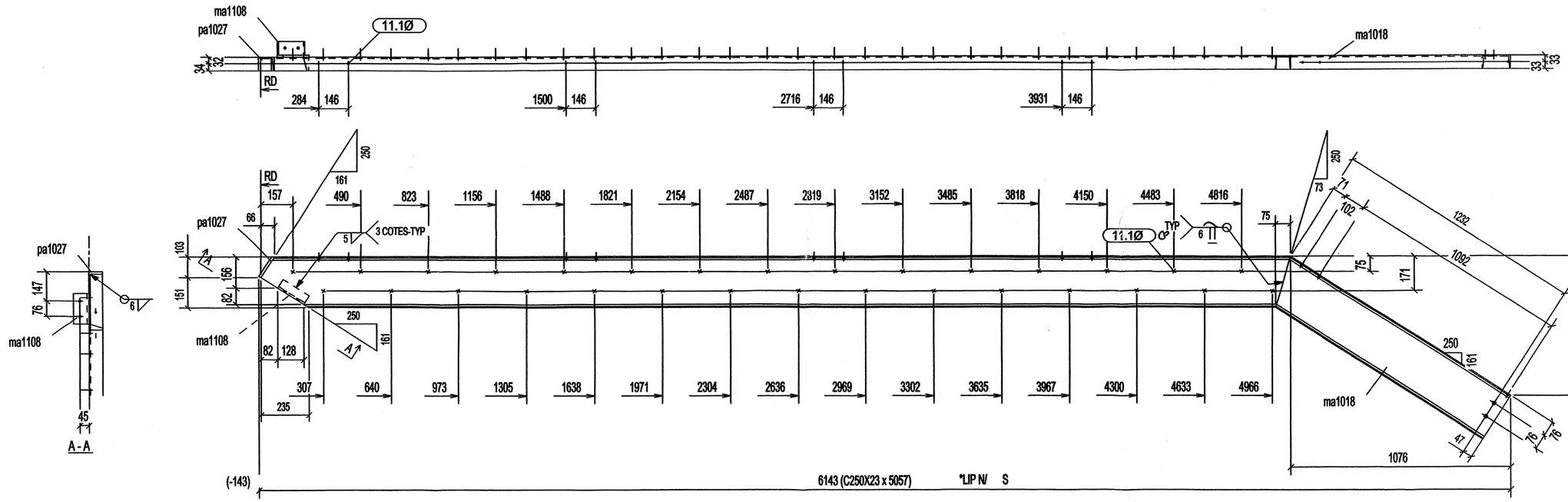

REVIEWED ACCORDING TO THE REQUIREMENTS OF THE GENERAL CONDITIONS OF THE CONTRACT. ANY ACTION INDICATED IS SUBJECT TO THESE REQUIREMENTS.

- [x] NO EXCEPTIONS TAKEN
- [ ] MAKE NOTED CORRECTIONS
- [ ] REVISE & RESUBMIT
- [ ] REJECTED

DATE JUL 11 2005 BY RR

EARTH TECH (CANADA) INC.

Joël Rhéaume 100724 QUÉBEC

1 - STRINGE - M1010

QTE	MARQUE	DESCRIPTION	LONG.	REMARKS
1	M1010	STRINGER		
1	M1010	C250X23	5057	
1	ma1018	C250X23	1279	
1	ma1108	L76X51X9.5	152	
1	pa1027	PL12X66	122	

QTE	DESCRIPTION
BOULONS DE CHANTIER	

GUERARD METAL
839, DE L'ÉGLISE,
ST-ROMUALD,
QUÉBEC, G6W 5M6
Tél.:(418) 839-0999
Fax:(418) 839-2810
www.guerardltd.com

REV.	DESCRIPTION	DATE	PAR
0	FOR APPROVAL	29-06-05	

TROUS	PEINTURE	ACIER
13/16 Ø U/N	GALVANIZED	300W U/N

DESSINER PAR	VÉRIFIER PAR	REV.
A.P. 06/29/2005	B.P.	0

PROJET: W.W.T IQUALUIT

DIV.	CONTRAT	
E001	C2005-42	M1010

CERTIFIÉ ISO 9002

DIV	GRID LOC.	ELEV.
1	2-4/A>	+12.844

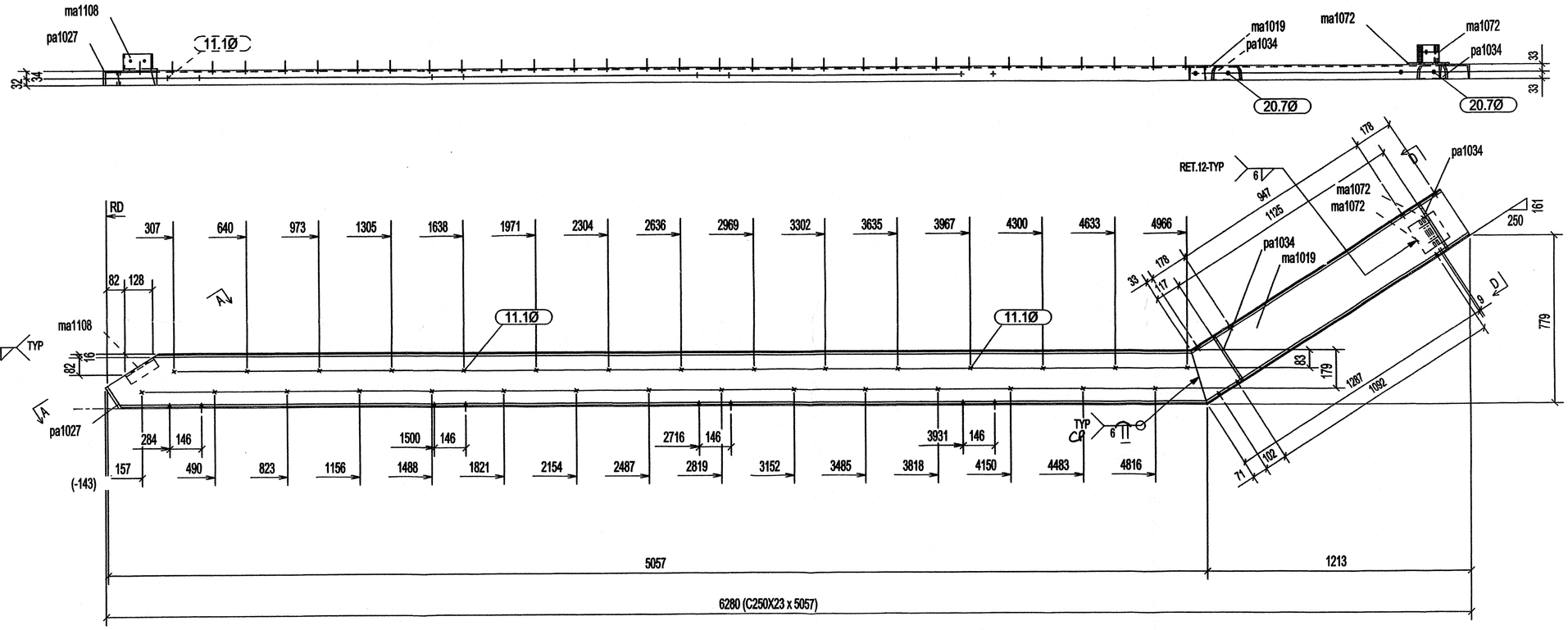

REVIEWED ACCORDING TO THE REQUIREMENTS OF THE GENERAL CONDITIONS OF THE CONTRACT. ANY ACTION INDICATED IS SUBJECT TO THESE REQUIREMENTS.

☑ NO EXCEPTIONS TAKEN
☐ MAKE NOTED CORRECTIONS
☐ REVISE & RESUBMIT
☐ REJECTED

DATE JUL 11 2005 BY
EARTH TECH (CANADA) INC.

Ingénieur Joël Rhéaume 100724 Québec

1 - STRINGE - M1011

QTE	MARQUE	DESCRIPTION	LONG.	REMARKS
1	M1011	STRINGER		
1	M1011	C250X23	5057	
2	L2	L89X64X7.9	140	
1	ma1019	C250X23	1442	
1	ma1108	L76X51X9.5	152	
1	pa1027	PL12X66	122	
2	pa1034	PL10X57.2	242	

QTE	DESCRIPTION
6	BOLT_3/4"DIA_A325_2"1/4
BOULONS DE CHANTIER	

EURO METAL
830, DE L'ÉGLISE, ST-ROMUALD, QUÉBEC, G6W 5M6
Tel: (418) 839-2989
Fax: (418) 839-3819
www.eurometal.com

REV.	DESCRIPTION	DATE	PAR
0	FOR APPROVAL	29-06-05	

TROUS	PEINTURE	ACIER
13/16 Ø U/N	GALVANIZED	300W U/N

DESSINER PAR	VÉRIFIER PAR	REV.
A.P. 06/28/2005	B.P.	0

PROJET: W.W.T IQUALUIT

DIV.	CONTRAT	
E001	C2005-42	M1011

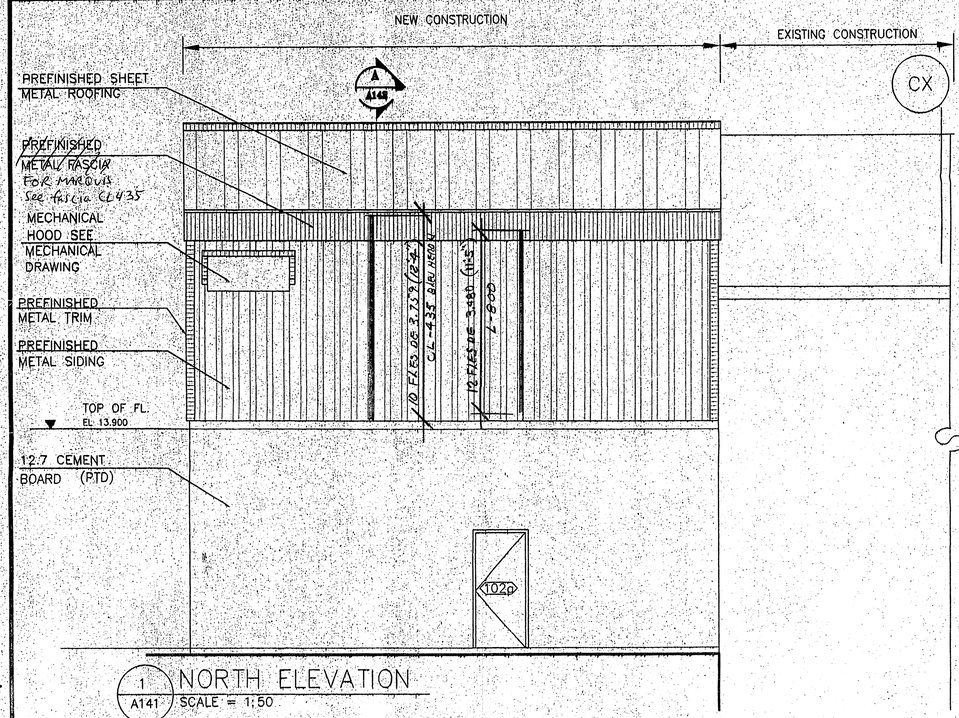

1 / A141 NORTH ELEVATION
SCALE = 1:50

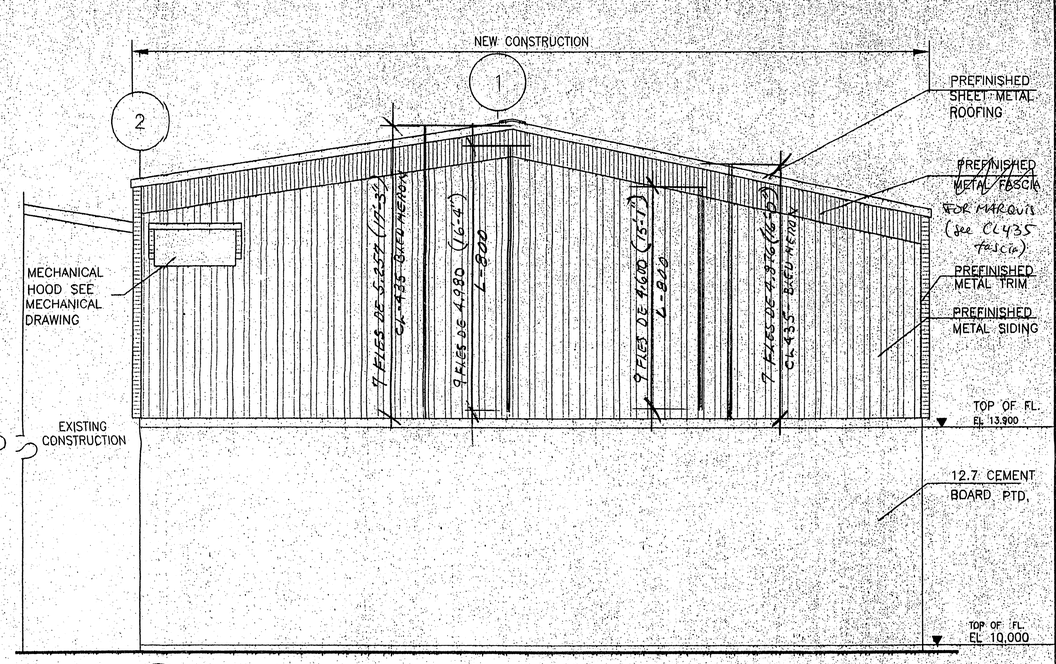

2 / A141 EASTELEVATION
SCALE = 1:50

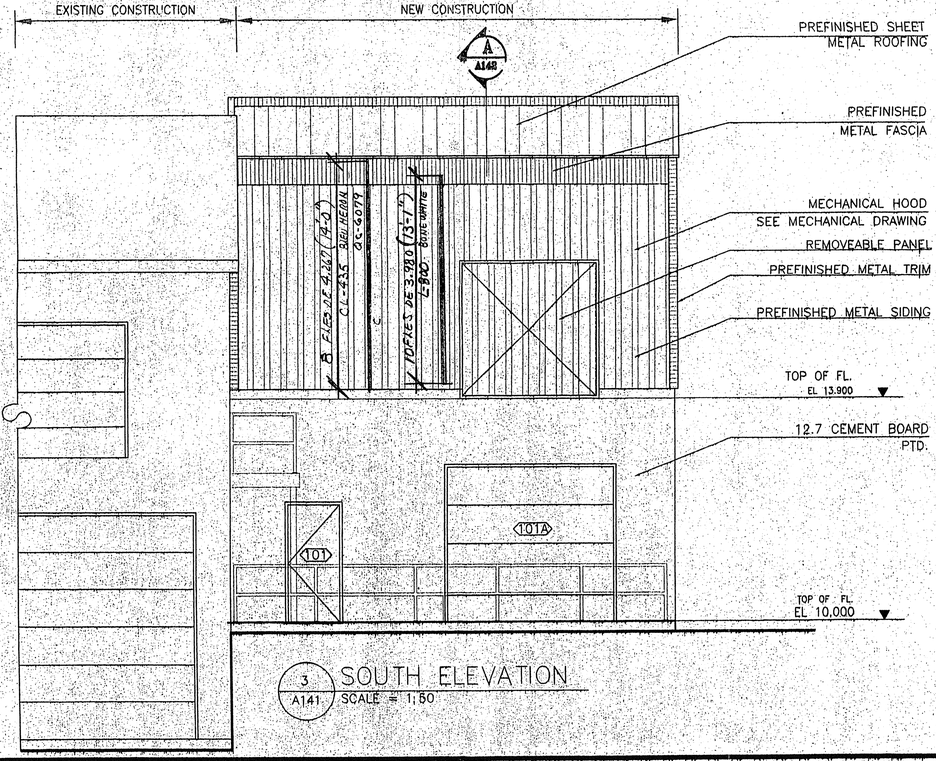

3 / A141 SOUTH ELEVATION
SCALE = 1:50

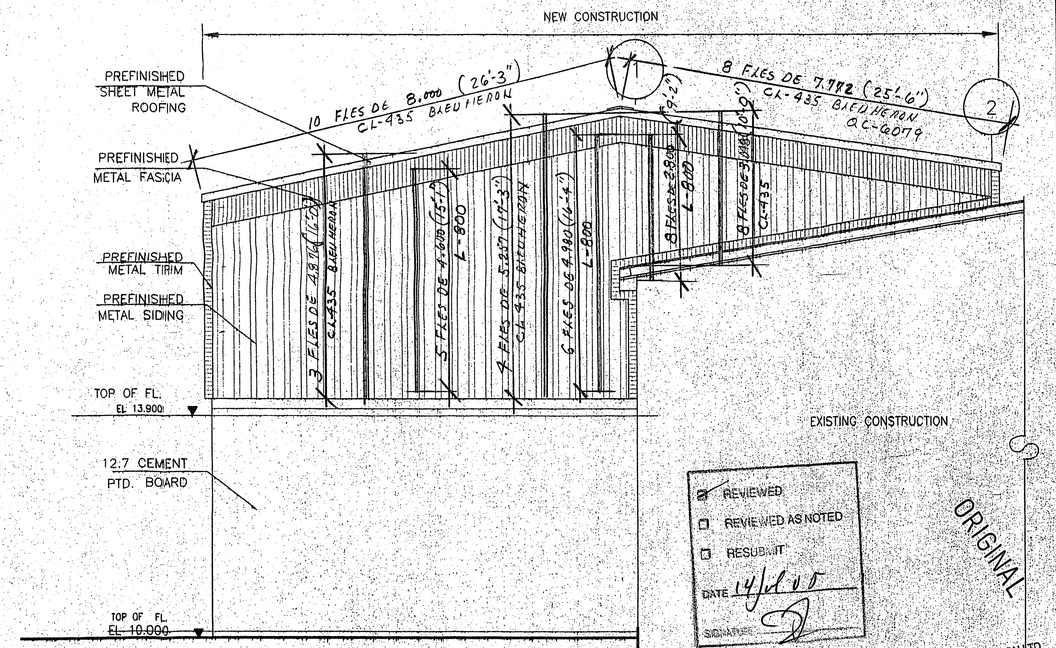

4 / A141 WEST ELEVATION
SCALE = 1:50

REVIEWED
REVIEWED AS NOTED
RESUBMIT
DATE 14/11/05
SIGNATURE

ORIGINAL

KUDLIK CONSTRUCTION LTD
P.O. BOX 727, 1519 FEDERAL ROAD
IQALUIT, NUNAVUT X0A 0H0
PHONE: (867) 979-1180
FAX: (867) 979-1186
04/07/05

EarthTech
A Tyco International Ltd. Company
12203-103rd Avenue
EDMONTON, ALBERTA
T5S 1J4 CANADA
Tel: 780-486-8800
Fax: 780-488-2121
www.earthtech.ca

Livingstone Architect
P.O. BOX 1186
IQALUIT, Nunavut X0A 0H0
Ph: 867 979-4180, Fax: 867 979-3991
Email: larch@nupanet.com

Stamp
PROVINCE OF MANITOBA
AMBROSE CAMERON LIVINGSTONE
REGISTERED ARCHITECT

No.	Date	Description
2	05 3/7	TENDER
1	04 10/15	95%

REVISIONS

Iqaluit
CITY of IQALUIT, Nunavut

Design
Drawn
Approved
Checked

Project Title
CITY OF IQALUIT WASTEWATER TREATMENT PLANT PHASE 1

Drawing Title
SECTIONS

Scale
Project No. 75360
Date 07.03.05
Drawing No. A141
Revision 2

LAST SAVED: 2/3/2005 2:34 PM L:\work\75000\75360\02b-040\01\X\ES\75360-TBLOCK (0).dwg