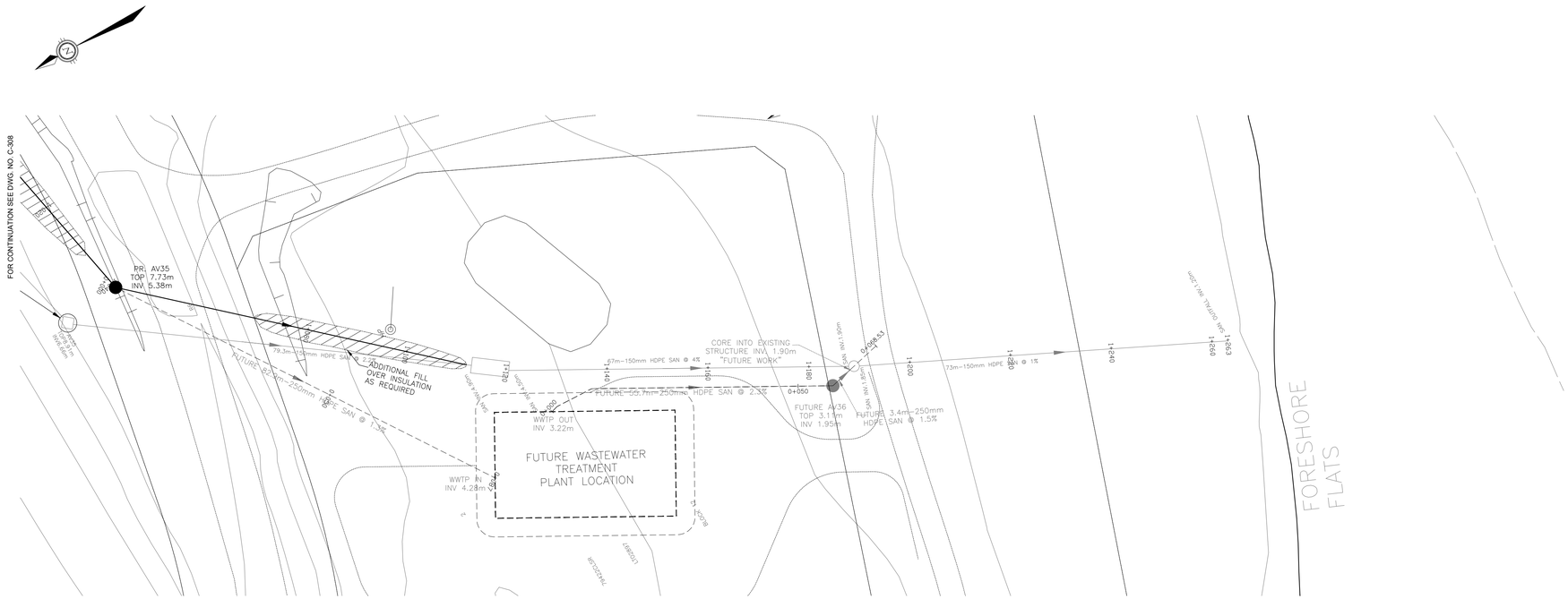

FUTURE WORK FOR INFORMATION PURPOSE ONLY

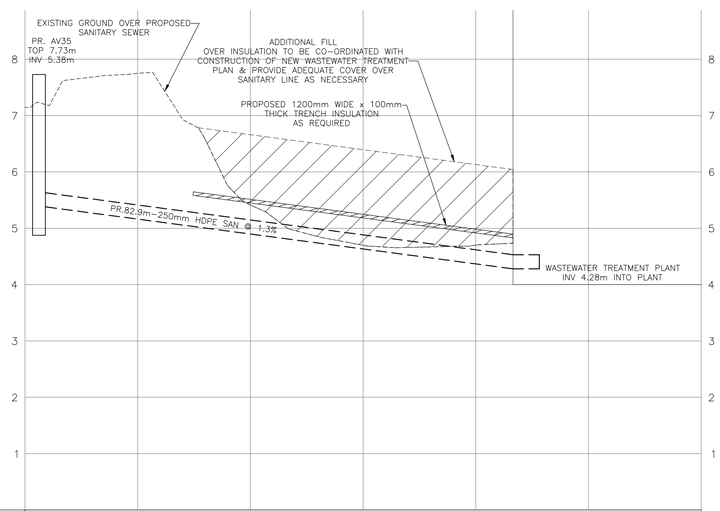

PROPOSED ELEVATION	7.15	7.75	5.41	4.70	4.70			
TOP OF WATERMAIN ELEVATION								
TOP OF WATER RECIRC ELEVATION								
SANITARY SEWER INVERT	5.38 / 5.38	82.9m-200mmø SERIES 128 HDPE SAN @ 1.3%			4.28			
EXISTING ELEVATION	7.15	7.75	5.41	4.70	4.70			
CHAINAGE	0+000	0+002.49	0+020	0+040	0+060	0+080	0+086.61	0+100	0+120

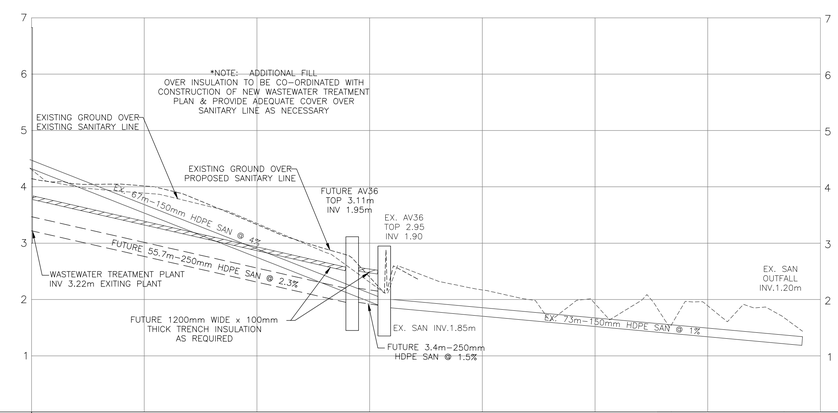

PROPOSED ELEVATION	4.15	4.02	3.33	2.40			1.57	1.67
TOP OF WATERMAIN ELEVATION								
TOP OF WATER RECIRC ELEVATION								
SANITARY SEWER INVERT	3.22	55.7m-250mmø SERIES 128 HDPE SAN @ 2.3%		1.95 / 1.95 / EX. 1.90 / EX. 1.85				EX. 1.20
EXISTING ELEVATION	4.15	4.02	3.33	2.40			1.57	1.67
CHAINAGE	0+000	0+020	0+040	0+056.91 / 0+060	0+080	0+100		

exp Services Inc. © 2012

No.	Issue	Date

Nunavut

AS-BUILT

DATE: APRIL 26, 2016

No.	Revision	Ckd. By	Date

Const. North

Drawn By: I.CRAWFORD

Dwg. Standards Ckd. By:

Designed By: A. ZARAD

Date Printed

Dwg. Design Ckd. By: S. BURDEN

exp Services Inc.
t: +1.613.688.1899 | f: +1.613.225.7330
2650 Queensview Drive, Unit 100
Ottawa, ON K2B 8H6
CANADA
www.exp.com

• BUILDINGS • EARTH & ENVIRONMENT • ENERGY •
• INDUSTRIAL • INFRASTRUCTURE • SUSTAINABILITY •

Project Title

NEW UTILIDOR DESIGN
RESOLUTE BAY, NU

Dwg. Title

PLAN AND PROFILE AV35 TO AV36

Project No. OTT-00206333-A0

Dwg. No. **C-309**

Rev. No. 00

Scale 1:500

This drawing is not to be scaled