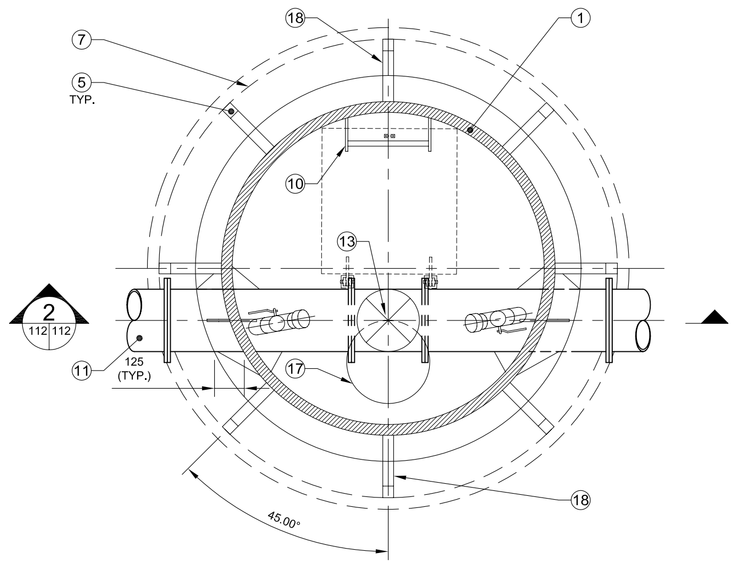

1 112 112 WATER SUPPLY LINE MANHOLE PLAN
SCALE 1:20

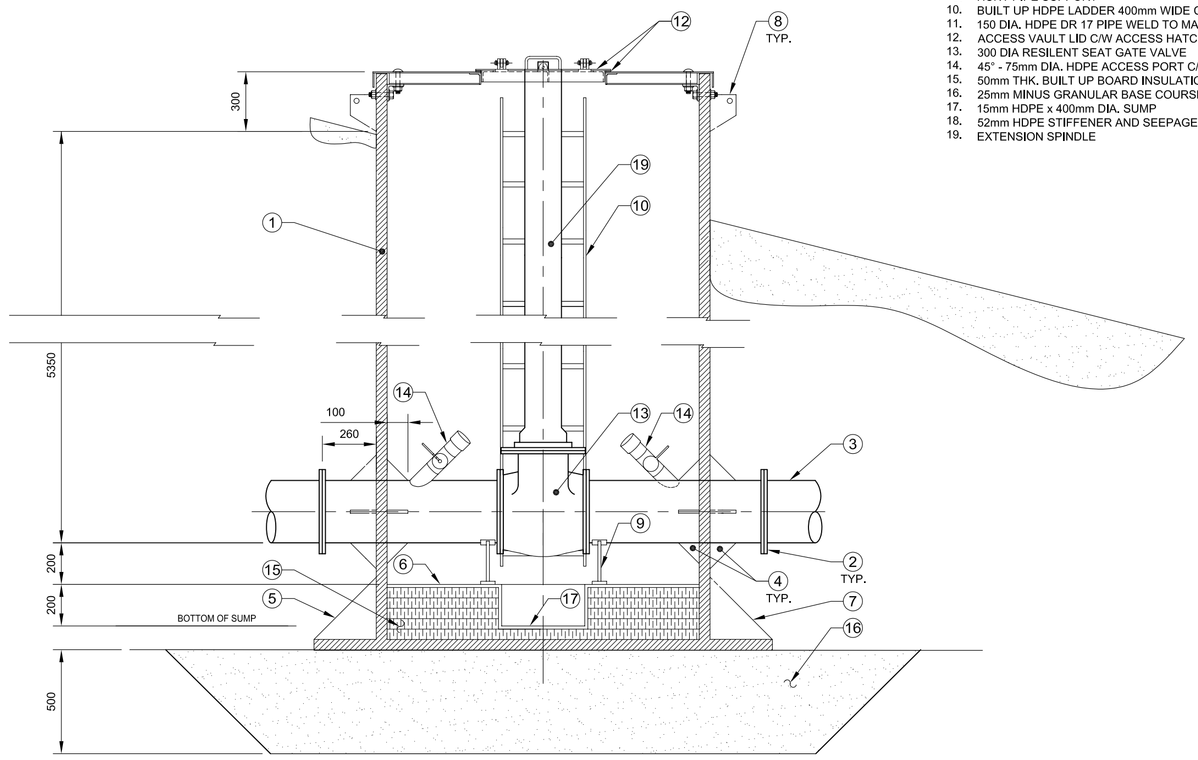

2 112 112 WATER SUPPLY LINE MANHOLE SECTION
SCALE 1:20

KEYNOTES:

1. 1600mm DIA. HDPE PIPE DR 32.5
2. FLANGE TO FLANGE CONNECTION
3. 300 DIA. HDPE DR 17 PIPE FLANGED TO MANHOLE
4. 15mm HDPE STIFFENER (TYP. OF 4)
5. 52mm HDPE STIFFENER (TYP. OF 6)
6. 15mm HDPE FLOOR (SLOPE FLOOR TO SUMP), WELD TO MANHOLE
7. 52mm HDPE BASE. WELD TO MANHOLE
8. 52mm HDPE LIFTING HOOK (TYP. OF 4)
9. HUNT PIPE SUPPORT
10. BUILT UP HDPE LADDER 400mm WIDE C/W RUNGS @ 300 O.C. FIX TO HDPE MANHOLE
11. 150 DIA. HDPE DR 17 PIPE WELD TO MANHOLE
12. ACCESS VAULT LID C/W ACCESS HATCH
13. 300 DIA RESILIENT SEAT GATE VALVE
14. 45° - 75mm DIA. HDPE ACCESS PORT C/W 75mm BALL VALVE AND CAP. INSTALL @ 10° SKEW FROM C
15. 50mm THK. BUILT UP BOARD INSULATION
16. 25mm MINUS GRANULAR BASE COURSE @ 97% S.P.D.
17. 15mm HDPE x 400mm DIA. SUMP
18. 52mm HDPE STIFFENER AND SEEPAGE CUT OFF 300mm X 1000mm HIGH (TYP. OF 6)
19. EXTENSION SPINDLE

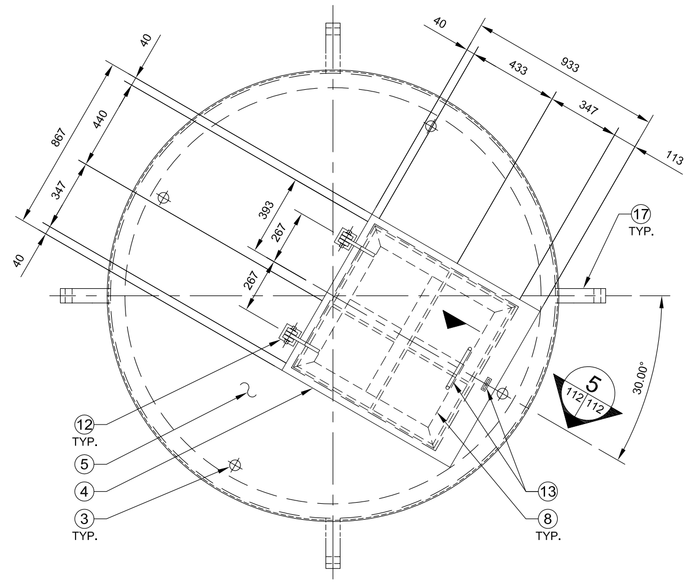

3 112 112 MANHOLE ACCESS HATCH FRAMING DETAIL
SCALE 1:20

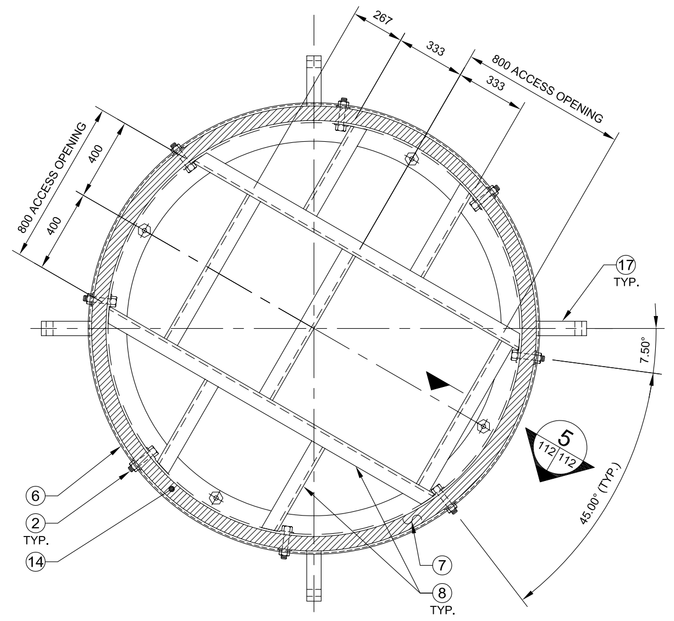

4 112 112 MANHOLE LID FRAMING DETAIL
SCALE 1:20

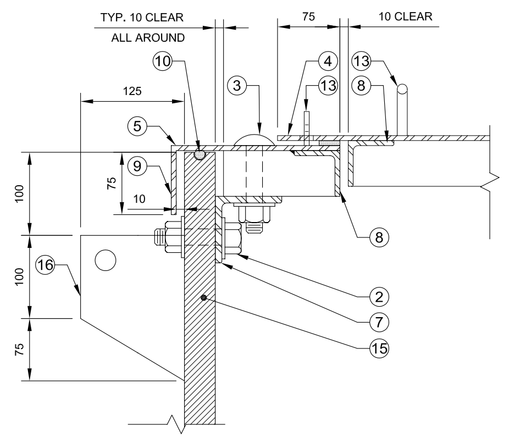

5 112 112 MANHOLE ACCESS SECTION
SCALE 1:5

NOTES:

1. FOR ACCESS MANHOLE LID FRAMING PLANS 6mm THK. GALV. STEEL PLATE LID NOT SHOWN FOR CLARITY.
2. ALL WELDS AND ABRASIONS TO BE REPAIRED WITH TWO COATES OF GALVCON.

KEYNOTES:

1. 1220mm DIA. HDPE DR 32.5 MANHOLE WALL
2. 19mm DIA. GALV. NUT, BOLT & WASHER (8 REQ'D) SEE ACCESS MANHOLE LID FRAMING PLAN FOR ARRANGEMENT
3. 19mm DIA. GALV. NUT. CARRIAGE BOLT & WASHER (4 REQ'D) SEE ACCESS HATCH FRAMING PLAN FOR ARRANGEMENT
4. 6mm THK. GALV. STEEL PLATE ACCESS HATCH COVER
5. 6mm THK. GALV. STEEL PLATE MANHOLE LID
6. 6mm THK. x 75mm DEEP GALV. STEEL BAND, WELD TO LID
7. 75x75x8 GALV. ROLLED ANGLE CONTINUOUS ALL AROUND AND BOLTED TO HDPE MANHOLE
8. 55x55x6 GALV. ANGLE SEE LID FRAMING **DETAIL 4**
9. 55x55x6 GALV. ANGLE SEE ACCESS HATCH FRAMING **DETAIL 3**
10. 12.5mm DIA. RUBBER GASKET IN ROUTERED SLOT CONTINUOUS ALL AROUND WEATHER TIGHT
11. 25mm WIDE x 6mm THK. RUBBER GASKET, MASTIC TO UNDERSIDE OF HATCH COVER (TYP. 4 SIDES)
12. ACCESS HATCH COVER HINGE (TYP. OF 2/PER) SEE **DETAIL 8** THIS DWG.
13. ACCESS HATCH COVER HASP & LIFTING HANDLE SEE **DETAIL 6** THIS DWG.
14. 1600mm DIA. HDPE DR 32.5 MANHOLE WALL
15. HDPE MANHOLE WALL
16. HDPE LIFTING HOOK SEE FRAMING DETAIL FOR ARRANGEMENT
17. 52mm HDPE LIFTING HOOK C/W 25mm DIA. HOLE (4 REQ'D)

PRELIMINARY ONLY
NOT FOR CONSTRUCTION

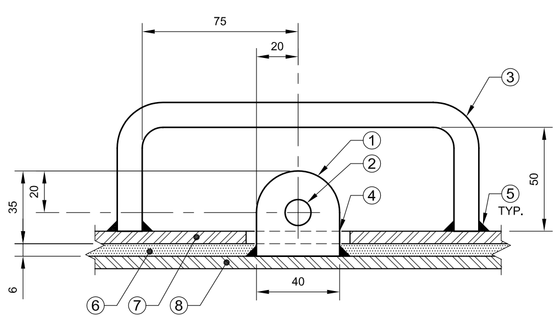

6 112 112 HASP AND LIFTING HANDLE DETAIL
SCALE 1:2

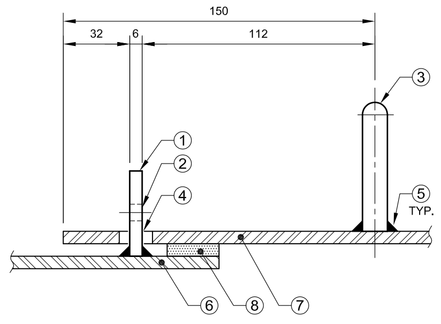

7 112 112 HASP AND LIFTING HANDLE SECTION
SCALE 1:2

NOTES:

1. ACCESS MANHOLE LID & HATCH ANGLE FRAMING ARE NOT SHOWN FOR CLARITY. FOR DETAIL REFER TO FRAMING PLAN AS PER DETAIL
2. ALL WELDS AND ABRASIONS TO BE REPAIRED WITH TWO COATES OF GALVCON.

KEYNOTES:

1. 6mm THK. GALV. STEEL STAPLE
2. 12.5mm DIA. DRILLED HOLE FOR PADLOCK
3. 12.5mm DIA. GAVL. STEEL BAR LIFTING HANDLE
4. 50mmx15mm SLOT HOLE
5. 6mm FILLET WELD ALL AROUND (TYP.)
6. 25mm WIDE x 6mm THK. RUBBER GASKET MASTIC TO UNDERSIDE OF HATCH COVER (TYPICAL 4 SIDES)
7. 6mm THK. GALV. STEEL PLATE ACCESS HATCH COVER
8. 6mm THK. GALV. STEEL PLATE MANHOLE LID

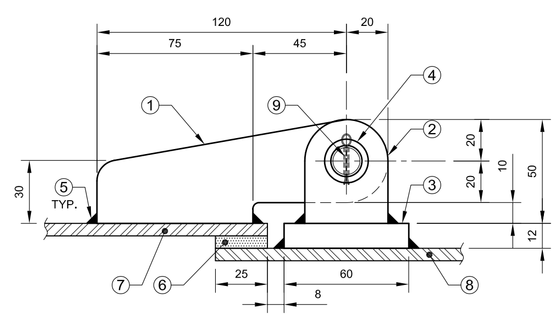

8 112 112 MANHOLE ACCESS HATCH HINGE DETAIL
SCALE 1:2

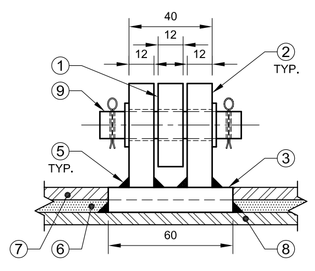

9 112 112 MANHOLE ACCESS HATCH HINGE SECTION
SCALE 1:2

NOTES:

1. ACCESS MANHOLE LID & HATCH ANGLE FRAMING ARE NOT SHOWN FOR CLARITY. FOR DETAIL REFER TO FRAMING PLAN AS PER DETAIL.
2. ALL WELDS AND ABRASIONS TO BE REPAIRED WITH TWO COATES OF GALVCON.

KEYNOTES:

1. 12mm THK. GALV. STEEL HINGE ARM C/W HOLE FOR 13mm DIA. PIN
2. 12mm THK. GALV. STEEL HINGE ARM SUPPORT C/W HOLE FOR 13mm DIA. PIN (TYPICAL OF 2)
3. 60mm x 60mm x 12mm THK. GALV. STEEL BASE PLATE
4. GAVL. STEEL WASHER (TYP.)
5. 6mm FILLET WELD ALL AROUND
6. 25mm WIDE x 6mm THK. RUBBER GASKET MASTIC TO UNDERSIDE OF HATCH COVER (TYPICAL 4 SIDES)
7. 6mm THK. GALV. STEEL PLATE ACCESS HATCH COVER
8. 6mm THK. GALV. STEEL PLATE MANHOLE LID
9. 13mm DIA. GALV. STEEL PIN C/W 2 COTTER PIN

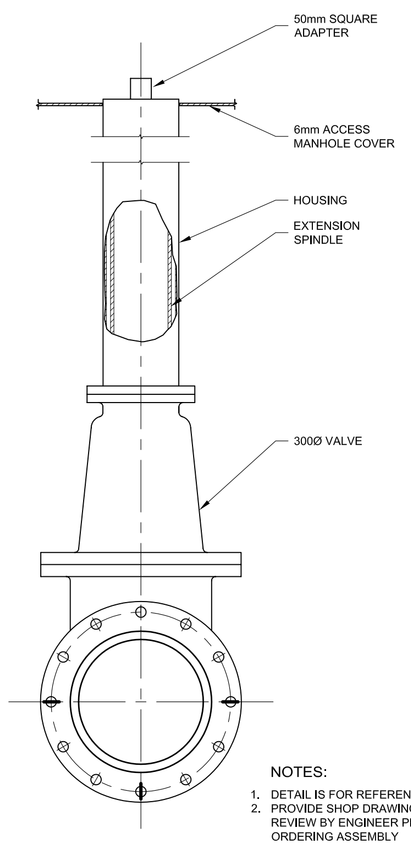

NOTES:

1. DETAIL IS FOR REFERENCE ONLY
2. PROVIDE SHOP DRAWINGS FOR REVIEW BY ENGINEER PRIOR TO ORDERING ASSEMBLY

10 112 112 EXTENSION SPINDLE DETAIL
SCALE 1:10

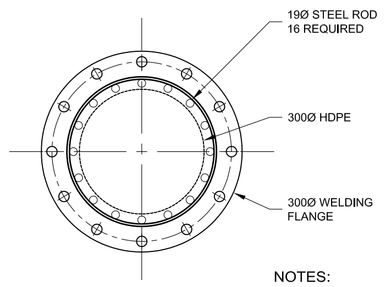

NOTES:

1. ALL ITEMS TO BE GALVENIZED

11 112 112 INTAKE SCREEN SECTION
SCALE 1:10

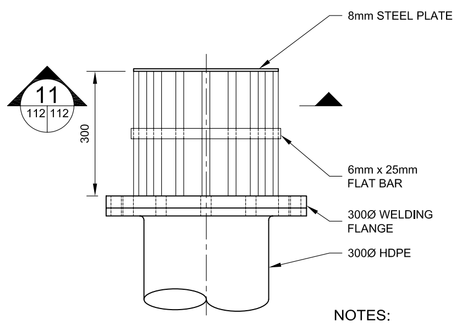

NOTES:

1. ALL ITEMS TO BE GALVENIZED

12 112 112 INTAKE SCREEN DETAIL
SCALE 1:10

CHANGE	DATE	DESCRIPTION	CHECK
2	10/28/05	75% SUBMISSION	GS
1	08/11/05	ISSUED FOR CLIENT REVIEW	GS

REVISIONS

DESIGN	DRAWN	CHECKED	DATE
GS	41TPW	GS	OCT 05

Nunavut

PROJECT
CAPE DORSET
SEWAGE TREATMENT SYSTEM
CAPE DORSET

TITLE
ACCESS MANHOLE DETAILS

DILLON CONSULTING

SCALE: AS SHOWN
DILLON PROJECT NUMBER: 05-4319-2000
CLIENT PROJECT NUMBER: 3439
DRAWING NUMBER: 112

EDIT DATE: 10.11.2005 PLOT DATE: 41tpw 10.11.2005 CAD FILE: 41tpw g:\cad\054319\dd\dwg\details.dwg