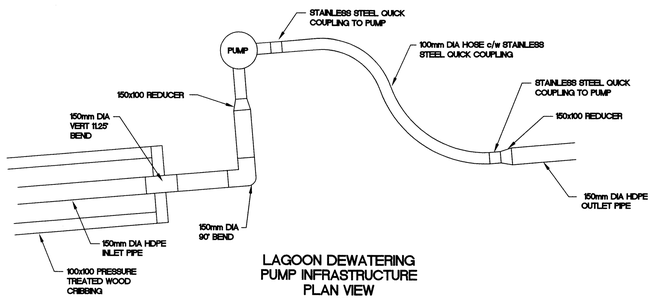

LAGOON DEWATERING
PUMP INFRASTRUCTURE
PLAN VIEW
1:25

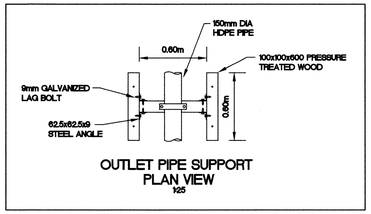

OUTLET PIPE SUPPORT
PLAN VIEW
1:25

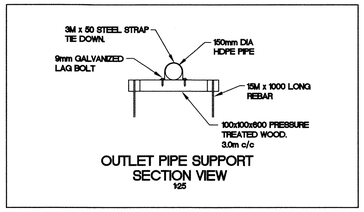

OUTLET PIPE SUPPORT
SECTION VIEW
1:25

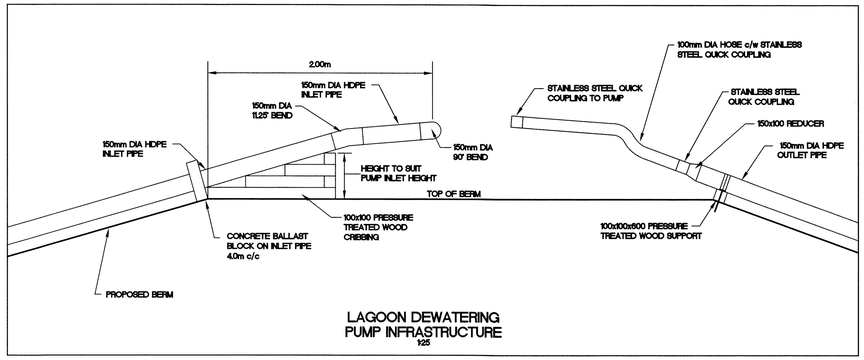

LAGOON DEWATERING
PUMP INFRASTRUCTURE
1:25

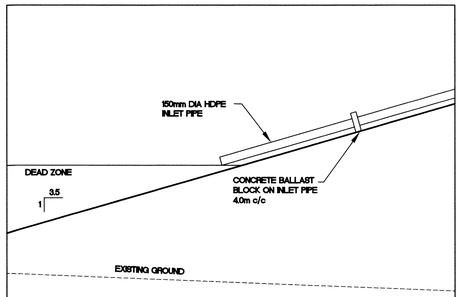

LAGOON DEWATERING
INLET
1:50

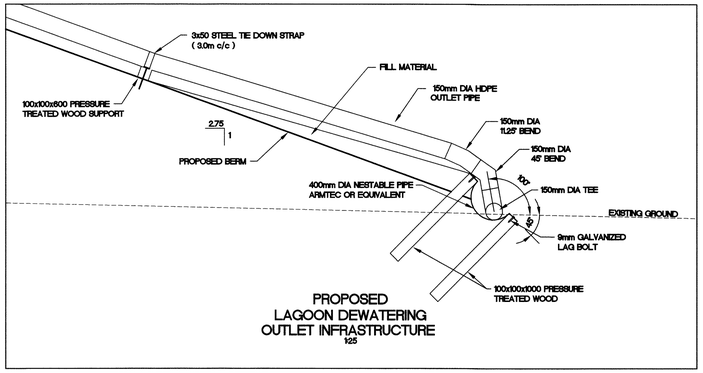

PROPOSED
LAGOON DEWATERING
OUTLET INFRASTRUCTURE
1:25

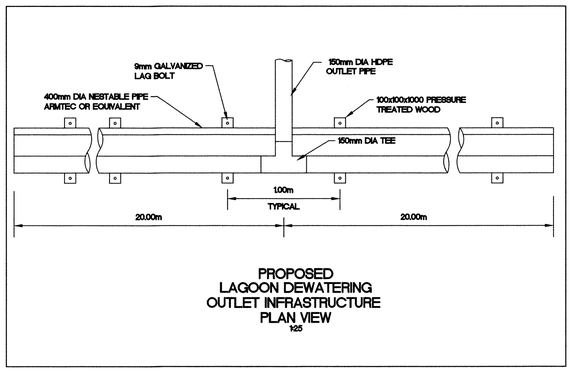

PROPOSED
LAGOON DEWATERING
OUTLET INFRASTRUCTURE
PLAN VIEW
1:25

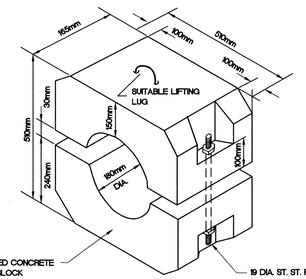

NOTE:

1. CONTRACTOR TO SUBMINT SHOP DRAWINGS FOR CONCRETE BALLAST BLOCKS C/W REINFORCING.
2. CONTRACTOR TO USE 6.25mm THICK NEOPRENE SPONGE PADDING BETWEEN PIPE AND BLOCKS TO PREVENT CONTACT. WIDTH TO BE 180mm.
3. BALLAST BLOCKS TO BE PLACED ON PIPE WHEN IT IS FLOATED IN THE WATER, SPACED AT 2.25m O.C.

CONCRETE
BALLAST BLOCK
SCALE 1:10

KEY PLAN

LEGEND

PERMIT OF PRACTICE
TROW ASSOCIATES INC.
Signature
Date Feb 22/08
PERMIT NUMBER: P184
The Association of Professional Engineers Geologists and Geophysicists of the NWT/NU

BENCH MARK

BM 1 ELEV. = 000.00
DESCRIPTION HERE

NO.	REVISION	DD/MN/YR	A.B.C.	A.B.C.
No.	DESCRIPTION	DATE	BY	APP'D

R E V I S I O N S

REGISTERED PROFESSIONAL ENGINEER
S.L. BURDEN
LICENSEE
N.W.T.

Trow Associates Inc.
154 Colonnade Road South
Ottawa, Ont. K2E 7J5
Tel:(613)225-9940
Fax:(613)225-7337

CLIENT
GOVERNMENT OF NUNAVUT

PROJECT
CLYDE RIVER
WASTE WATER
LAGOON

TITLE
DETAILS

design by	S.A.D.	project no.	OTCD19055A
drawn by	M.M.R.	drawing no.	DE-2
checked by	S.L.B.		
date	14/12/07		
scale	AS SHOWN		