Operations and Maintenance Manual for the Wastewater Treatment Facility Hamlet of Clyde River

Prepared for:

Department of Community Government and Services
Government of Nunavut

Volume II

Trow Associates Inc.

100-2650 Queensview Drive
Ottawa, Ontario, K2B 8H6
Telephone: (613) 688-1899
Facsimile: (613) 225-7337
E-mail: ottawa@trow.com
Web Site: www.trow.com

OTCD00019055A
January 2011

Draft

Operations and Maintenance Manual

for the

Wastewater Treatment Facility

Hamlet of Clyde River

Chapter 1 – Index

Draft

Table of Contents

Chapter 1 – Index **i**

Table of Contents 1

Appendix D - Manufacturing Data and Service Information **1**

Technical Specifications Pump 1
Technical Specifications Truck Discharge 2
Technical Specifications HDPE Pipe 3
Technical Specifications Gabion 4
Technical Specifications Bentofix 5
Technical Specifications Thermistors 6
Technical Specifications Facility Sign 7
Technical Specifications Wells 8
Technical Specifications Nested Pipe 9
Technical Specifications Geotextile 10

Draft

Appendix D - Manufacturing Data and Service Information

Draft

Technical Specifications Pump

Draft

A C D E U

Prime Aire®

Diesel Engine Driven
Priming Assisted Centrifugal Pump w/Autostart
Model PA6C60–4045D
Size 6” x 6”

TWO YEAR WARRANTY 2 PRIMING-ASSIST

Total Head		Capacity of Pump in U.S. Gallons per Minute (GPM) at Continuous Performance				
P.S.I.	Feet					
63.3	146	200	200	200	200	200
60.7	140	400	400	400	400	400
52.0	120	820	1000	1000	1000	1000
43.4	100	960	1380	1420	1420	1420
34.7	80	1040	1500	1770	1770	1770
26.0	60	1100	1510	1815	2050	2050
17.4	40	1140	1505	1820	2120	2250
8.7	20	1200	1550	1820	2150	2360
Suction Lift		25’	20’	15’	10’	5’

SHOWN WITH OPTIONAL NPT SUCTION AND DISCHARGE FLANGES

WARNING!

Do not use in explosive atmosphere or for pumping volatile flammable liquids.

PUMP SPECIFICATIONS

Size: 6” x 6” (152 mm x 152 mm) Flanged.
Casing: Ductile Iron No. 65-45-12. Maximum Operating Pressure 100 psi (690 kPa).*
Open Type, Two Vane Impeller: Ductile Iron No. 65-45-12. Handles 3” (76,2 mm) Diameter Spherical Solids.
Impeller Shaft: Stainless Steel No. 17-4 PH.
Replaceable Wear Plate: Ductile Iron No. 80-60-03.
Removeable Cleanout Cover Plate: Gray Iron No. 30.
Intermediate Bracket: Gray Iron No. 30.
Seal Plate: Gray Iron No. 30.
Seal: Mechanical, Oil-Lubricated. Silicon Carbide Rotating and Stationary Faces. Stainless Steel No. 316 Stationary Seat. Fluorocarbon Elastomers (DuPont Viton® or Equivalent). Stainless Steel No. 18-8 Cage and Spring. Maximum Temperature of Liquid Pumped, 160°F (71°C).*
Shaft Sleeve: Stainless Steel No. 17-4 PH.
Priming Chamber: Gray Iron No. 30.
Discharge Check Valve: Gray Iron No. 30 Housing w/Buna-N Flapper.
Radial and Thrust Bearings: Open Double Ball.
Bearing and Seal Cavity Lubrication: SAE No. 30 Non-Detergent Oil.
Flanges: Gray Iron No. 30.
Gaskets: Resistant Synthetic Rubber, Cork, PTFE, Vegetable Fiber, and Compressed Synthetic Fibers.
Hardware: Standard Plated Steel.
Bearing and Seal Cavity Oil Level Sight Gauges.

**Consult Factory for Applications Exceeding Maximum Pressure and/or Temperature Indicated.*

Standard Equipment: Gear-Driven Air Compressor. Hoisting Bail. Combination Skid Base w/Fuel Tank. Strainer. Single Ball Type Float Switch.**

***50 Ft. (15 m) Standard Length; Dual Switches and Alternate Cable Lengths Available From the Factory.*

Optional Equipment: Battery. High Speed (55 MPH/89 KM/H) Wheel Kit with ST225/75R15 Pneumatic Tires. Over-the-Road Trailer (Meets D.O.T. and Transport Canada Requirements) Available w/Either Electric or Hydraulic Surge Brakes, Running Lights, Two Trailer Jack Stands and Safety Chains. EPS w/Submersible Transducer Liquid Level Sensor (50 Ft. [15 M] Cable Standard, Alternate Lengths Available).

ENGINE SPECIFICATIONS

Model: John Deere 4045D “Power Tech”.
Type: Four Cylinder, Four Cycle, Liquid Cooled Diesel Engine.
Displacement: 276 Cu. In. (4,5 liters).
Governor: Mechanical.
Lubrication: Forced Circulation.
Air Cleaner: Dry Type.
Oil Reservoir: 9 U.S. Qts. (8,5 liters) Dry; 8 U.S. Qts. (7,6 liters) Refill.
Fuel Tank: 88 U.S. Gals. (330 liters).
Full Load Operating Time: 26.1 Hrs.
Starter: 12V Electric.

Standard Features: Low Oil Pressure, High Coolant Temperature and Start Failure Safety Shut Down Switches/Indicators. Throttle Control. Autostart Instrument Panel Includes: Tachometer, Voltmeter, Hourmeter, Coolant Temperature and Oil Pressure Indicators, Manual/Stop/Auto Key Switch, 10 Amp Fuse, Audible Startup Warning Delay. Muffler w/Guard and Weather Cap.

JOHN DEERE PUBLISHED PERFORMANCE:

Maximum Continuous BHP 76 (57 kW) @ 2500 RPM
Maximum Dynamic BHP 80 (60 kW) @ 2500 RPM

© Copyright by The Gorman-Rupp Company 2005

Specification Data

SECTION 42, PAGE 1100

APPROXIMATE DIMENSIONS and WEIGHTS

	SKID BASE	2-WHEEL
NET WEIGHT:	3310 LBS. (1501 KG.)	3600 LBS. (1633 KG.)
SHIPPING WEIGHT:	3460 LBS. (1569 KG.)	3600 LBS. (1633 KG.)
EXPORT CRATE SIZE:	247 CU. FT. (7 CU. M.)	

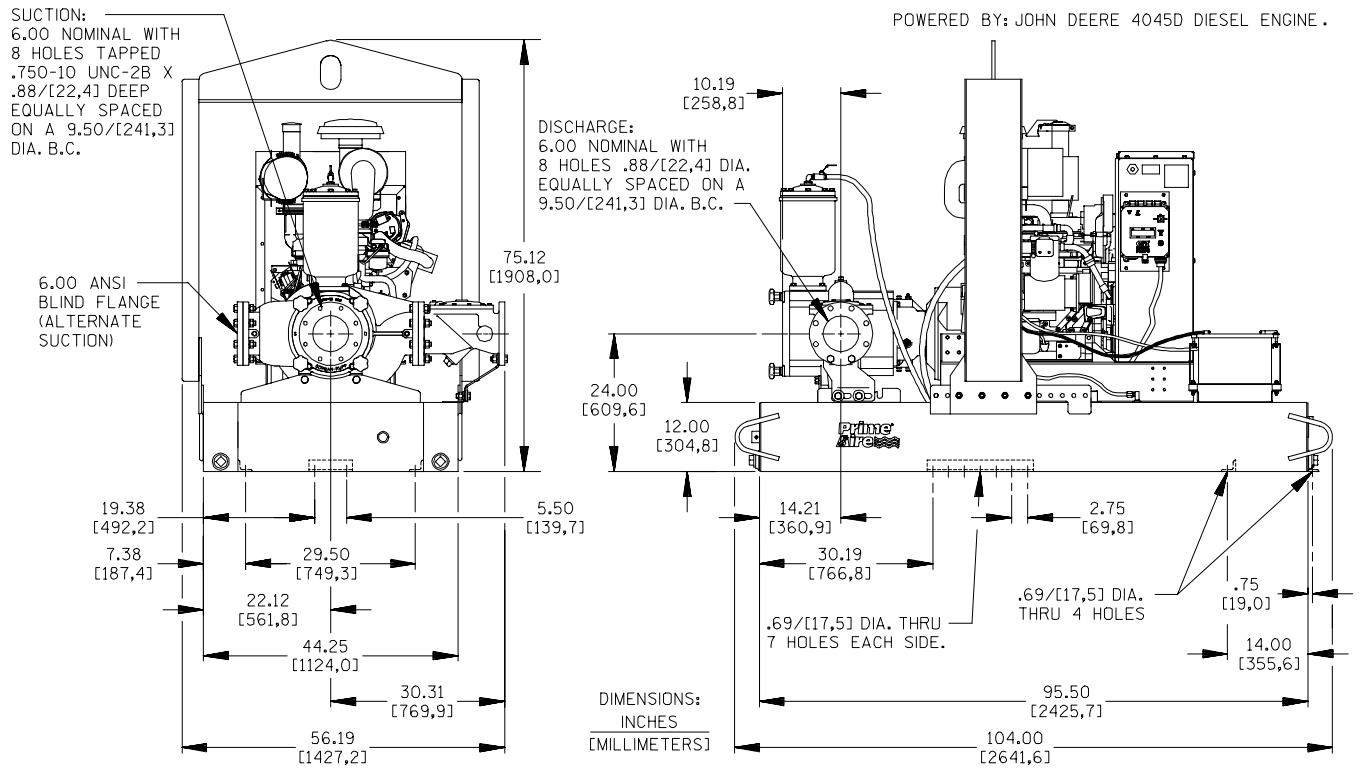

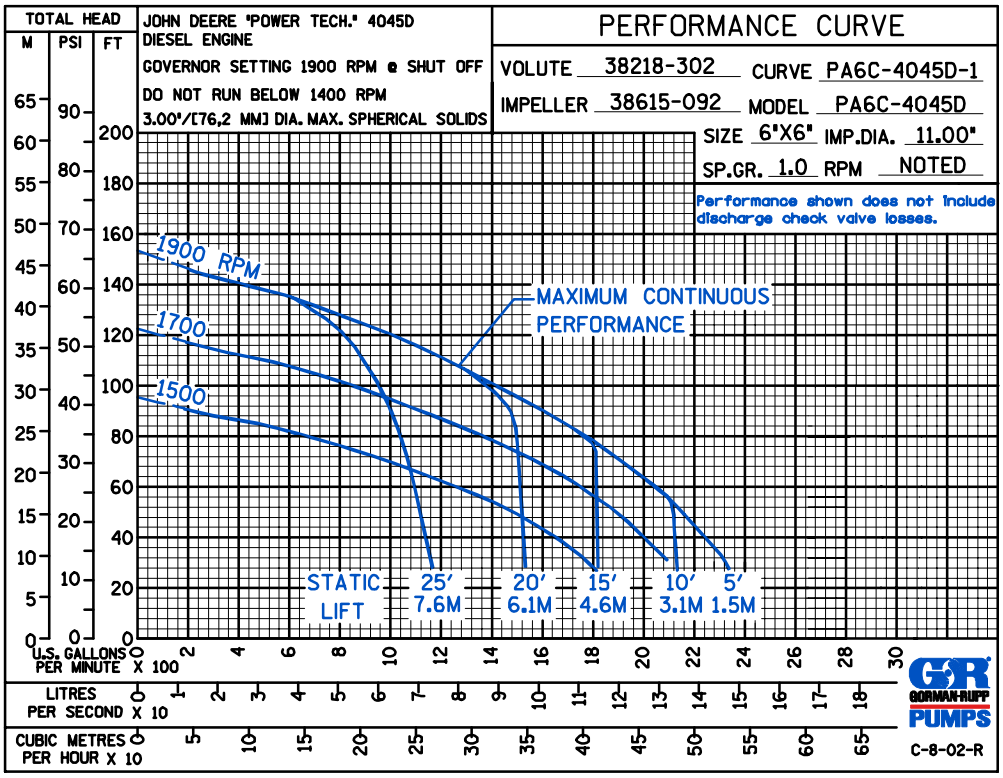

THE GORMAN-RUPP COMPANY • MANSFIELD, OHIO

GORMAN-RUPP OF CANADA LIMITED • ST. THOMAS, ONTARIO, CANADA

Specifications Subject to Change Without Notice

Printed in U.S.A.

© Copyright by The Gorman-Rupp Company 2005

Technical Specifications Truck Discharge

Draft

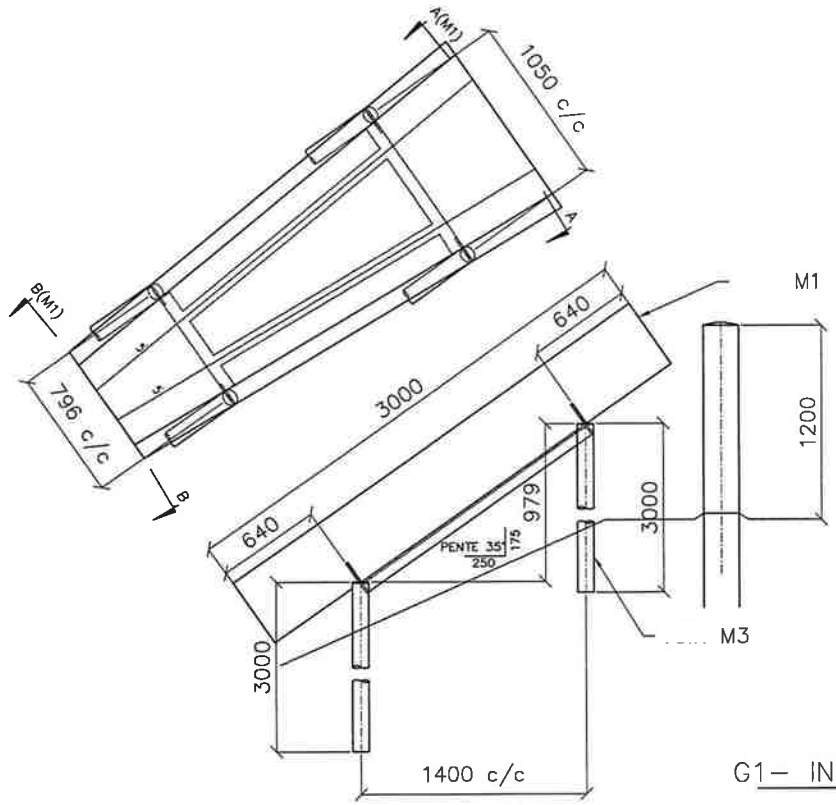

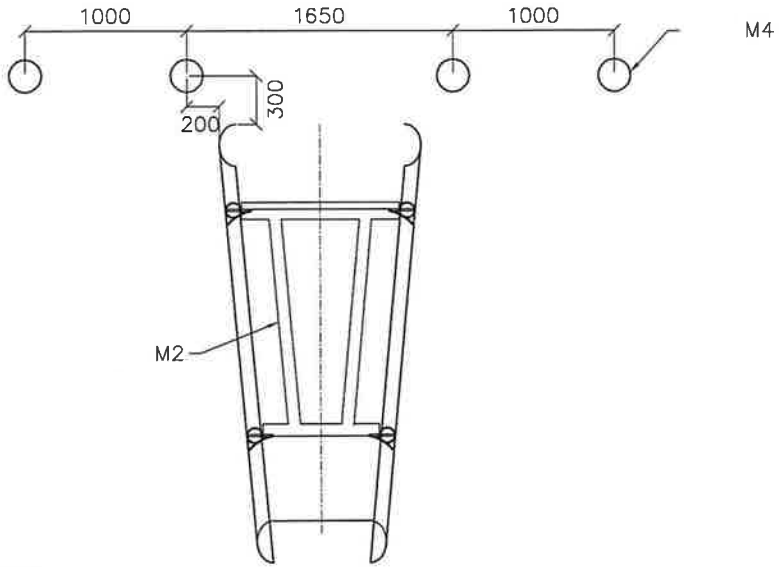

G1— INSTALLATION

DESSIN #G1 A

REVISIONS				
	A	08.08.11	EMIS POUR APPROBATION	

NOTES

LISTE DE MATÉRIEL

QUANTITÉ CONT.	QUANTITÉ ASS.	MQE	DESCRIPTION	LONG.	GRADE	REMARQUE	MASSE
						ASS.	

MASSE UNITAIRE ASSEMBLAGE: 281.2 Kg TOTAL: 561.4 Kg

SERVICES TECHNIQUES DCE
1808 RTE DE L'AÉROPORT
STE-FOY, QUÉ G2G 2P7
TEL: 418-872-5218 FAX: 418-872-6804
dce@dce-qc.com

CLIENT: **Kudlik Construction Ltd**

PROJET: **Clyde River**

TITRE: Truck discharge

DESSINÉ: Serge Desbiens

VÉRIFIÉ:

DATE: AOÛT 2008

RAPPORT:

PROJET #: **12350**

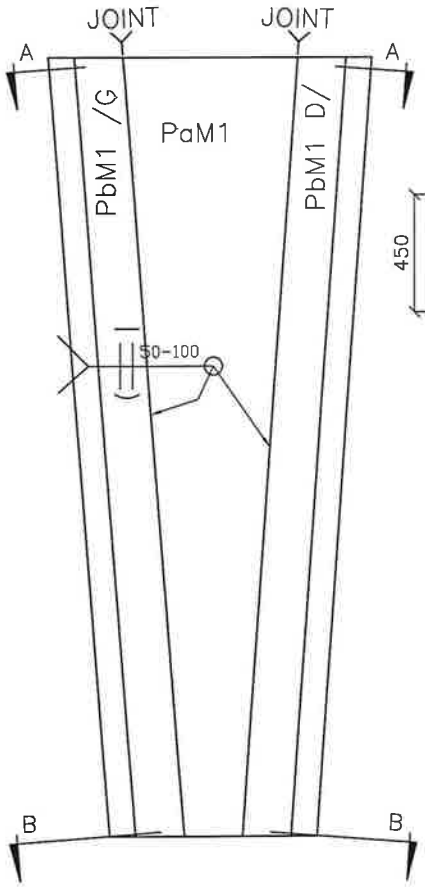

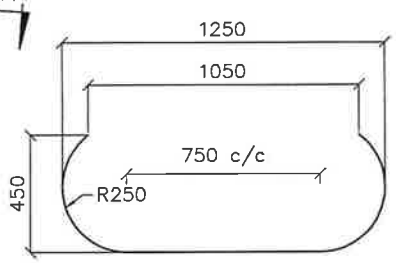

COUPE A–A

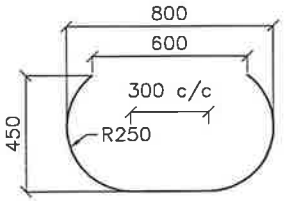

COUPE B–B

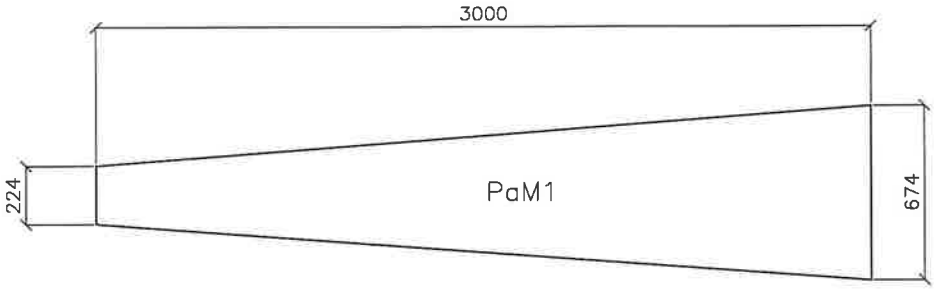

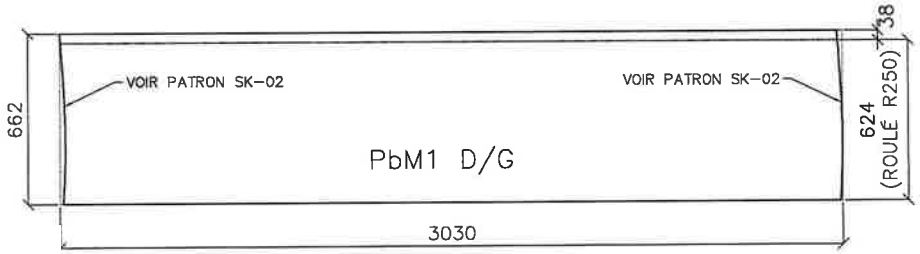

M1 Drawing

DESSIN #M1 A

REVISIONS				
	A	08.08.11	EMIS POUR APPROBATION	.

NOTES: .

LISTE DE MATÉRIEL

QUANTITÉ CONT.	QUANTITÉ ASS.	MQE		DESCRIPTION	LONG.	GRADE	REMARQUE	MASSE
12	UN	PaM1	PL.	674 x 12G	3000	NOIR	ASS. M1	31.6
12	UN/UN	PbM1	PL.	662 x 12G	3030	NOIR		96.8

MASSE UNITAIRE ASSEMBLAGE: 90.0 Kg TOTAL: 1080 Kg

SERVICES TECHNIQUES DCE
ISO 9001
1808 RTE DE L'AÉROPORT
STE-FOY, QUÉ G2G 2P7
TEL: 418-872-5218 FAX: 418-872-6804
dce@dce-qc.com

CLIENT: Kudlik Construction Ltd

PROJET: Clyde River

TITRE: Truck discharge

DESSINÉ: Serge Desbiens

VERIFIÉ: .

DATE: AOÛT 2008

RAPPORT:

PROJET #: 12350

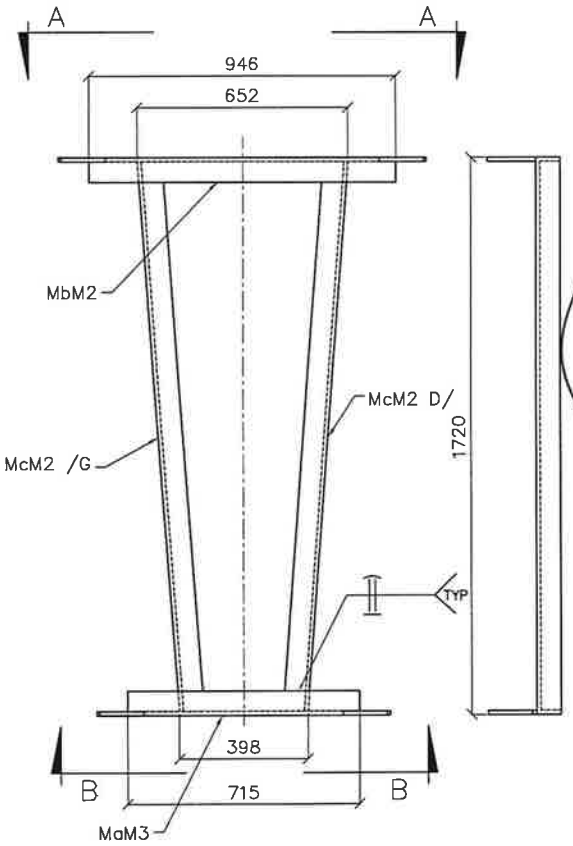

M2– 3 REQUIS

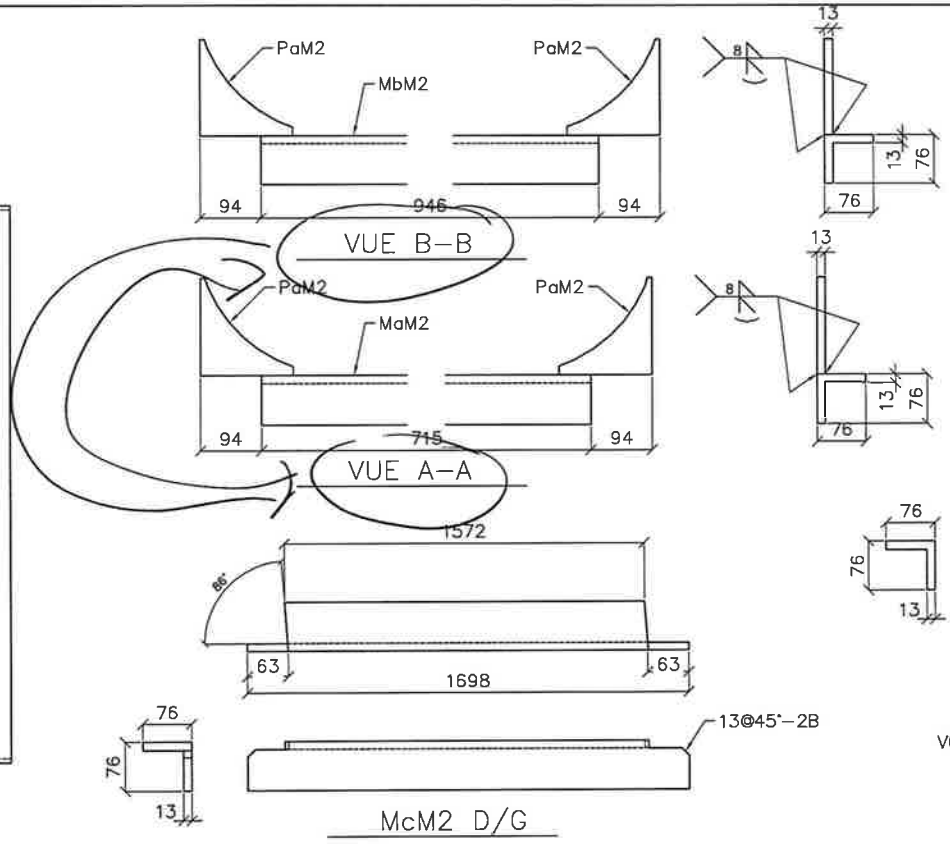

McM2 D/G

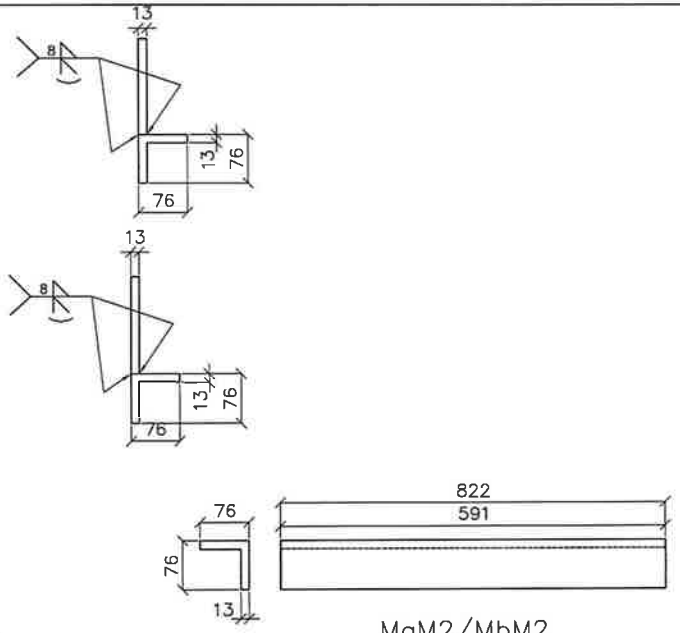

MaM2/MbM2

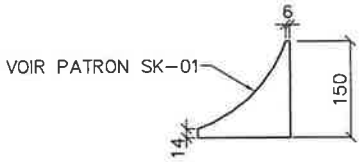

PaM2

DESSIN #M2 A

REVISIONS			
A	08.08.11	EMIS POUR APPROBATION	

NOTES

LISTE DE MATÉRIEL

QUANTITÉ CONT.	QUANTITÉ ASS.	MQE		DESCRIPTION	LONG.	GRADE	REMARQUE	MASSE
12	4	PaM2	PL	143x12,7	250	NOIR	ASS. M2	12.1
3	UN	MaM2	L	76x76x12,7	946	NOIR		11.5
3	UN	MbM2	L	76x76x12,7	715	NOIR		8,3
3 / 3	UN / UN	McM2	L	76x76x12,7	1698	NOIR		47,6

MASSE UNITAIRE ASSEMBLAGE: 79.5 Kg TOTAL: 238.5 Kg

SERVICES TECHNIQUES DCE
1808 RTE DE L'AÉROPORT
STE-FOY, QUÉ G2G 2P7
TEL: 418-872-5218 FAX: 418-872-6804
dce@dce-qc.com

CLIENT: **Kudlik Construction Ltd**

PROJET: **Clyde River**

TITRE: Truck Discharge(rack)

DESSINÉ: Serge Desbiens

VÉRIFIÉ:

DATE: AOÛT 2008

RAPPORT:

PROJET #: **12350**

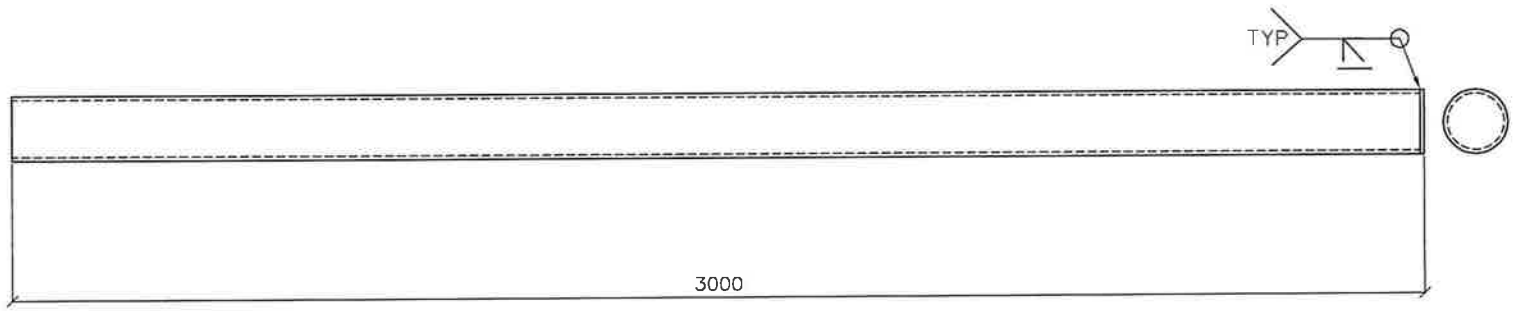

M3-12

DESSIN #M3 A

REVISIONS				
	A	08.08.11	EMIS POUR APPROBATION	.

NOTES

LISTE DE MATÉRIEL

QUANTITÉ CONT.	QUANTITÉ ASS.	MQE		DESCRIPTION	LONG.	GRADE	REMARQUE	MASSE
12	UN	M3	HSS	ø100 EXT.-CÉD. 40	2994	NOIR	ASS. M3	53.0
12	UN	paM3	PL.	PL. ø100x6	.	NOIR		.2

MASSE UNITAIRE ASSEMBLAGE: 53.2 Kg TOTAL: 212.8 Kg

SERVICES TECHNIQUES DCE
1808 RTE DE L'AÉROPORT
STE-FOY, QUÉ G2G 2P7
TEL: 418-872-5218 FAX: 418-872-6804
dce@dce-qc.com

CLIENT: **Kudlik Construction Ltd**

PROJET: **Clyde River**

TITRE: Truck Discharge(steel pile)

DESSINÉ: Serge Desbiens

VÉRIFIÉ: .

DATE: AOÛT 2008

RAPPORT:

PROJET #: **12350**

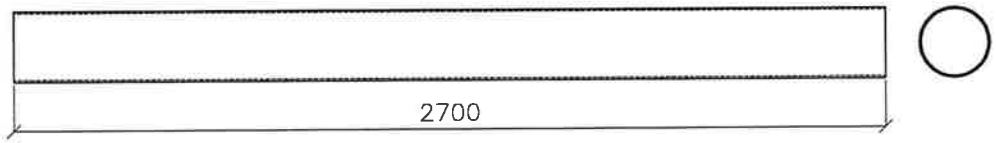

GALVANISÉ
SOUDURES ETANCHES
PRÉVOIR TROUS NÉCESSAIRES

M4-12

REVISIONS			
A	08.08.11	EMIS POUR APPROBATION	.

NOTES: .

LISTE DE MATÉRIEL

QUANTITÉ CONT.	QUANTITÉ ASS.	MQE		DESCRIPTION	LONG.	GRADE	REMARQUE	MASSE
12	UN	M4	HSS	ø219 EXT.-CÉD.20	2700	NOIR	ASS. M4	90.0

MASSE UNITAIRE ASSEMBLAGE: 90.0 Kg TOTAL: 1080 Kg

DESSIN #M4 A

SERVICES TECHNIQUES DCE
ISO 9001
1808 RTE DE L'AÉROPORT
STE-FOY, QUÉ G2G 2P7
TEL: 418-872-5218 FAX: 418-872-6804
dce@dce-qc.com

CLIENT: **Kudlik Construction Ltd**

PROJET: **Clyde River**

TITRE: Truck Discharge **(Bollard)**

DESSINÉ: Serge Desbiens

VERIFIÉ: .

DATE: AOÛT 2008

RAPPORT:

PROJET #: **12350**

Technical Specifications HDPE Pipe

Draft

For more information and technical
assistance contact:

Performance Pipe, a division of
Chevron Phillips Chemical Company LP
P.O. Box 269006
Plano, TX 75026-9006
800.527.0662

DriscoPlex®
PE3608 / (PE3408) Pipe
Pipe and Fittings Data Sheet

Typical Material Physical Properties of DriscoPlex® PE3608 / (PE3408)

High Density Polyethylene Materials

Property	Unit	Test Procedure	Typical Value
Material Designation	---	PPI TR-4	PE3608
Cell Classification	---	ASTM D3350	345464C
Pipe Properties			
Density	gms / cm^3	ASTM D1505	0.955 (black)
Melt Index Condition 190 / 2.16	gms / 10 minutes	ASTM D1238	0.08
Hydrostatic Design Basis 73°F (23°C)	psi	ASTM D2837	1600
Hydrostatic Design Basis 140°F (60°C)	psi	ASTM D2837	800
Color: UV Stabilizer [C] [E]	---	ASTM D3350	Min 2% carbon Black Color UV Stabilizer
Material Properties			
Flexural Modulus 2% Secant - 16:1 span; depth, 0.5 in / min	psi	ASTM D790	>110,000
Tensile Strength at Yield	psi	ASTM D638 Type IV	3200
Elongation at Break 2 in / min., Type IV bar	%	ASTM D638	>700
Elastic Modulus	psi	ASTM D638	>150,000
Hardness	Shore D	ASTM D2240	62
PENT	hrs	ASTM F1473	>100
Thermal Properties			
Vicat Softening Temperature	°F	ASTM D1525	256
Brittleness Temperature	°F	ASTM D746	-103
Thermal Expansion	in / in / °F	ASTM D696	1.0×10^{-4}

Another quality product from Chevron Phillips Chemical Company LP The Woodlands, Texas

Before using the piping product, the user is advised and cautioned to make its own determination and assessment of the safety and suitability of the piping product for the specific use in question and is further advised against relying on the information contained herein as it may relate to any specific use or application. It is the ultimate responsibility of the user to ensure that the piping product is suited and the information is applicable to the user's specific application. This data sheet provides typical physical property information for polyethylene resins used to manufacture the piping product. It is intended for comparing polyethylene piping resins. It is not a product specification, and it does not establish minimum or maximum values or manufacturing tolerances for resins or for the piping product. These typical physical property values were determined using compression-molded plaques prepared from resin. Values obtained from tests of specimens taken from the piping product can vary from these typical values. Performance Pipe does not make, and expressly disclaims, all warranties, of merchantability or fitness for a particular purpose, regardless of whether oral or written, express or implied, or allegedly arising from any usage of trade or from any course of dealing in connection with the use of information contained herein or the piping product itself. The user expressly assumes all risk and liability, whether based in contract, tort or otherwise, in connection with the use of the information contained herein or the piping product itself. Further, information contained herein is given without reference to any intellectual property issues, as well as federal, state, or local laws which may be encountered in the use thereof. Such questions should be investigated by the user.

For more information and technical
assistance contact:

Performance Pipe, a division of
Chevron Phillips Chemical Company LP
P.O. Box 269006
Plano, TX 75026-9006
800.527.0662

SUGGESTED INDUSTRIES AND APPLICATIONS

Potable Water Mains	Horizontal Directional Drilling (HDD)	Marine Service
Sliplining	Water transmission Lines	Pipe Bursting
Industrial Water Mains	Ash, Tailings & Abrasives	Mining
Municipal Water Utilities	Open-cut and Bury	Culverts
Rural Water Distribution	River Crossings	Plow-in
Mun. & Ind. Sewer	Trenchless Technologies	Crude oil
Fire Main Piping	Rural Water Distribution	Plow-in

Butt Fusion Conditions

- 60-90 psig (4.14-6.21 bar) interfacial fusion pressure.
- 400-450° (204-232°C) heater surface temperature range.
- Please refer to Performance Pipe's PE3608 (PE3408) fusion procedure, Bulletin PP 750.

Available Sizes

- ¾" through 54" IPS
- 4" through 36" DIPS

Specification Data

The resin, pipe and fitting listed may comply with one or more of the standards below.

Applicable Standards	DriscoPlex® Pipe Series	PE3608 (PE3408)	PE4710 (d_f)
ASTM F714, NSF 61, ASTM D3035	4000, 4100, 4200, 4300, 4400, 4500, 4600, 4700	0.5	0.63
AWWA C906, AWWA C901	4000, 4100, 4200, 4300, 4400, 4500, 4600, 4700	0.5	0.63
FMA, AWWA, F714	1500, 1600	0.5	---
API 15LE, ASTM D2513			0.63

Another quality product from Chevron Phillips Chemical Company LP The Woodlands, Texas

Before using the piping product, the user is advised and cautioned to make its own determination and assessment of the safety and suitability of the piping product for the specific use in question and is further advised against relying on the information contained herein as it may relate to any specific use or application. It is the ultimate responsibility of the user to ensure that the piping product is suited and the information is applicable to the user's specific application. This data sheet provides typical physical property information for polyethylene resins used to manufacture the piping product. It is intended for comparing polyethylene piping resins. It is not a product specification, and it does not establish minimum or maximum values or manufacturing tolerances for resins or for the piping product. These typical physical property values were determined using compression-molded plaques prepared from resin. Values obtained from tests of specimens taken from the piping product can vary from these typical values. Performance Pipe does not make, and expressly disclaims, all warranties, of merchantability or fitness for a particular purpose, regardless of whether oral or written, express or implied, or allegedly arising from any usage of trade or from any course of dealing in connection with the use of information contained herein or the piping product itself. The user expressly assumes all risk and liability, whether based in contract, tort or otherwise, in connection with the use of the information contained herein or the piping product itself. Further, information contained herein is given without reference to any intellectual property issues, as well as federal, state, or local laws which may be encountered in the use thereof. Such questions should be investigated by the user.

For more information and technical
assistance contact:

Performance Pipe, a division of
Chevron Phillips Chemical Company LP
P.O. Box 269006
Plano, TX 75026-9006
800.527.0662

	6400	0.5	

Another quality product from

Chevron Phillips Chemical Company LP
The Woodlands, Texas

Before using the piping product, the user is advised and cautioned to make its own determination and assessment of the safety and suitability of the piping product for the specific use in question and is further advised against relying on the information contained herein as it may relate to any specific use or application. It is the ultimate responsibility of the user to ensure that the piping product is suited and the information is applicable to the user's specific application. This data sheet provides typical physical property information for polyethylene resins used to manufacture the piping product. It is intended for comparing polyethylene piping resins. It is not a product specification, and it does not establish minimum or maximum values or manufacturing tolerances for resins or for the piping product. These typical physical property values were determined using compression-molded plaques prepared from resin. Values obtained from tests of specimens taken from the piping product can vary from these typical values. Performance Pipe does not make, and expressly disclaims, all warranties, of merchantability or fitness for a particular purpose, regardless of whether oral or written, express or implied, or allegedly arising from any usage of trade or from any course of dealing in connection with the use of information contained herein or the piping product itself. The user expressly assumes all risk and liability, whether based in contract, tort or otherwise, in connection with the use of the information contained herein or the piping product itself. Further, information contained herein is given without reference to any intellectual property issues, as well as federal, state, or local laws which may be encountered in the use thereof. Such questions should be investigated by the user.

PERFORMANCE PIPE
A Division of Chevron Phillips Chemical Company LP

Revised 03-17-2008

IPS Size and Dimension Data

PE3608 (PE3408)

DriscoPlex® Municipal & Industrial & Energy Series/IPS Pipe Data

Pressure Ratings are cslculated using 0.50 design factor for HDS at 73°F as listed in PPI TR-4 for PE 3608 materials.
Temperature, Chemical, and Environmental use considerations may require use of additional design factors.

Pressure Rating		100 psi DR 17.0			80 psi DR 21.0			65 psi DR 26.0			50 psi DR 32.5			
IPS Pipe Size	Nominal OD (in)	Minimum Wall (in)	Average ID (in)	Weight (lbs/ft)	Minimum Wall (in)	Average ID (in)	Weight (lbs/ft)	Minimum Wall (in)	Average ID (in)	Weight (lbs/ft)	Minimum Wall (in)	Average ID (in)	Weight (lbs/ft)	IPS Pipe Size
1 1/4"	1.660													1 1/4"
1 1/2"	1.900													1 1/2"
2"	2.375	0.140	2.078	0.43										2"
3"	3.500	0.206	3.063	0.93										3"
4"	4.500	0.265	3.938	1.54	0.214	4.046	1.26							4"
6"	6.625	0.390	5.798	3.34	0.315	5.957	2.74	0.255	6.084	2.23	0.204	6.193	1.80	6"
8"	8.625	0.507	7.550	5.66	0.411	7.754	4.64	0.332	7.921	3.78	0.265	8.063	3.05	8"
10"	10.750	0.632	9.410	8.79	0.512	9.665	7.20	0.413	9.874	5.88	0.331	10.048	4.74	10"
12"	12.750	0.750	11.160	12.36	0.607	11.463	10.13	0.490	11.711	8.27	0.392	11.919	6.67	12"
14"	14.000	0.824	12.253	14.90	0.667	12.586	12.22	0.538	12.859	9.97	0.431	13.086	8.04	14"
16"	16.000	0.941	14.005	19.47	0.762	14.385	15.96	0.615	14.696	13.02	0.492	14.957	10.51	16"
18"	18.000	1.059	15.755	24.64	0.857	16.183	20.20	0.692	16.533	16.48	0.554	16.826	13.30	18"
20"	20.000	1.176	17.507	30.42	0.952	17.982	24.94	0.769	18.370	20.35	0.615	18.696	16.42	20"
22"	22.000	1.294	19.257	36.81	1.048	19.778	30.17	0.846	20.206	24.62	0.677	20.565	19.86	22"
24"	24.000	1.412	21.007	43.80	1.143	21.577	35.91	0.923	22.043	29.30	0.738	22.435	23.64	24"
26"	26.000	1.529	22.759	51.41	1.238	23.375	42.14	1.000	23.880	34.39	0.800	24.304	27.74	26"
28"	28.000	1.647	24.508	59.62	1.333	25.174	48.87	1.077	25.717	39.88	0.862	26.173	32.17	28"
30"	30.000	1.765	26.258	68.44	1.429	26.971	56.11	1.154	27.554	45.78	0.923	28.043	36.93	30"
32"	32.000	1.882	28.010	77.87	1.524	28.769	63.84	1.231	29.390	52.09	0.985	29.912	42.02	32"
34"	34.000	2.000	29.760	87.91	1.619	30.568	72.06	1.308	31.227	58.80	1.046	31.782	47.44	34"
36"	36.000	2.118	31.510	98.55	1.714	32.366	80.79	1.385	33.064	65.92	1.108	33.651	53.19	36"
42"	42.000	2.471	36.761	134.14	2.000	37.760	109.97	1.615	38.576	89.73	1.292	39.261	72.39	42"
48"	48.000	2.824	42.013	175.21	2.286	43.154	143.63	1.846	44.086	117.19	1.477	44.869	94.55	48"
54"	54.000				2.571	48.549	181.78	2.077	49.597	148.32	1.662	50.477	119.67	54"

Performance Pipe can produce to specialized pipe dimensions. Check with your Performance Pipe contact for availability of dimensions not listed.
Visit www.performancepipe.com for the most current literature.

March 2008 Supersedes all previous publications
© 2001-2008 Chevron Phillips Chemical Company LP

Elbow Design Information and End Options

The design basis for forge-molded elbows and fabricated segment elbows is well known. A 90 degree elbow is one-fourth of a torus (doughnut). The wedge removed from the straight pipe to make a miter-curve causes a force imbalance within the elbow. The ell tries to straighten out, sort of like a kink in a pressurized fire-hose. The ell must be derated or extra mass added to maintain the same pressure rating as the pipe itself. The heat-fusion welds are a focus point for the bending stress trying to straighten the ell. Continuous bend pipe without mitered fusion joints offer a higher pressure rating because there is no stress intensification factor (SIF) (i.e., no joints). Forge molded ells offer the same tight radius, no fusion joint flow turbulence, no miter joint stress intensification, and full pressure rating. Fabricated miter-ells have about the same radius of curvature, 4 turbulence amplifying fusion joints close together, and must be re-rated for WPR. The END OPTIONS for elbows include butt-end, flanged, and DIMJA.

ASME B31.3-1996 Edition

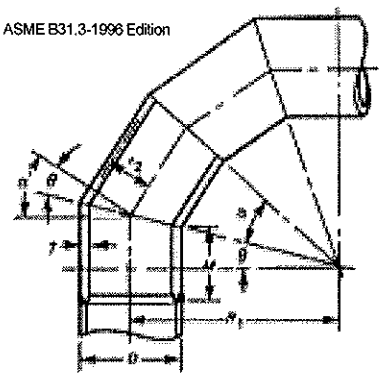

FIG. 304.23 NOMENCLATURE FOR MITER BENDS

The following nomenclature is used in the equations for pressure design of straight pipe.

tm = minimum required thickness, including mechanical, corrosion, and erosion allowances

t = pressure design thickness, as calculated in accordance with pare. 304.1.2 for internal pressure or as determined in accordance with pare. 304.1.3 for external pressure

c = the sum of the mechanical allowances (thread or groove depth) plus corrosion and erosion allowance". For threaded components, the nominal thread depth (dimension h of ASME BI.20.1, or equivalent) shall apply. For machined surfaces or grooves where the tolerance is not specified, the tolerance shall be assumed to be 0.5 mm (0.02 in.) in addition to the specified depth of the cut.

T = pipe wall thickness (measured or minimum per purchase specification)

d = inside diameter of pipe. For pressure design calculation, the inside diameter of the pipe is the maximum value allowable under the purchase specification.

P = internal design gage pressure

D = outside diameter of pipe as listed in tables of standards or specifications or as measured

E = quality factor from Table A-IA or A-IB

S = stress value for material from Table A-I

Y= coefficient from Table 304.1.1, valid for t < D/6 and for materials shown. The value of Y may be interpolated for intermediate temperatures. For t ≥ D/6.

$$y = \frac{d + 2c}{D + d + 2c}$$

Multiple Miter Bends. The maximum allowable internal pressure shall be the lesser value calculated from Eqs. (4a) and (4b). These equations are not applicable when θ exceeds 22.5 deg.

$$P_m = \frac{SE(T-c)}{r_2}\left(\frac{T-c}{(T-c) + 0.643 \tan\theta\sqrt{r_2(T-c)}}\right) \quad (4a)$$

$$P_m = \frac{SE(T-c)}{r_2}\left(\frac{R_1 - r_2}{R_1 - 0.5r_2}\right) \quad (4b)$$

(b) Single Miter Bends

(1) The maximum allowable internal pressure for a single miter bend with angle a not greater than 22.5 deg. shall be calculated by Eq. (4a).

(2) The maximum allowable internal pressure for a single miter bend with angle a greater than 22.5 deg. shall be calculated by Eq. (4c):

$$P_m = \frac{SE(T-c)}{r_2}\left(\frac{T-c}{(T-c) + 1.25 \tan\theta\sqrt{r_2(T-c)}}\right) \quad (4c)$$

c) The miter pipe wall thickness *T* used in Eqs. (4a), (4b), and (4c) shall extend a distance not less than M from the inside crotch of the end miter welds where

M = the larger of $2.5(r_2 T)^{0.5}$ or $\tan\theta\,(R_1 - r_2)$

The length of taper at the end of the miter pipe may be included in the distance M.

(d) The following nomenclature is used in Eqs. (4a), (4b), and (4c) for the pressure design of miter bends:

c = same as defined in para. 304.1.1

E = same as defined in para. 304.1.1

P_m = maximum allowable internal pressure for miter bends

r_2 = mean radius of pipe using nominal wall *T*

R_1 = effective radius of miter bend, defined as the shortest distance from the pipe centerline to the intersection of the planes of adjacent miter Joints

S = same as defined in pare. 304.1.1

T = miter pipe wall thickness (measured or minimum per purchase specification)

θ = angle of miter cut

α = angle of change in direction at miter joint = 2θ

For compliance with this Code, the value of R_1 shall be not less than that given by Eq. (5):

$$R_1 = \frac{A}{\tan\theta} + \frac{D}{2} \quad (5)$$

where A has the following empirical values:

for U.S. customary units:

(T - c), in.	A
≤ 0.5	1.0
0.5 < (T - c) < 0.88	2(T - c)
≥0.88	[2(T - c)/3] + 1.17

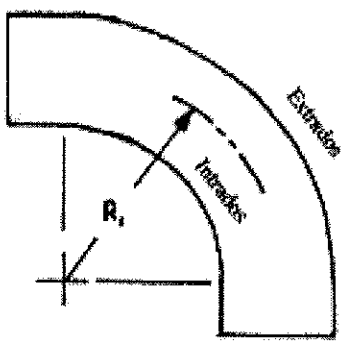

$$t = \frac{PD}{((SE/I) + PY)}$$

where at the intrados (inside bend radius)

$$I = \frac{4(R/D) - 1}{4(R/D) - 2}$$

where at the extrados (outside bend radius)

$$I = \frac{4(R/D) - 1}{4(R/D) - 2}$$

and at the sidewall on the bend centerline radius, I=1.0.

R_1= centerline radius of bend or elbow

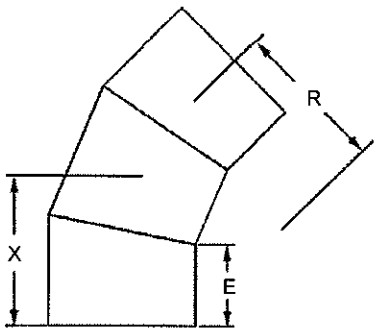

IPS 45°
3 Segment Elbow
Fabricated (1/8 Bend)
(Dimensions in Inches)

IPS Size	R/D Ratio	R	X	E	SDR	WPR (psi)	Weight (lbs)
2"	5.4	12.7	6.6	4.0	7 9 11&17	200 160 128/80	1.5 1 1
3"	3.8	13.2	6.8	4.0	7 9 11&17	200 160 128/80	3 2 2
4"	3.0	13.7	7.0	4.0	7 9 11&17	200 160 128/80	6 5 4
6"	2.2	14.7	9.4	6.0	7 9 11&17	200 160 128/80	1 11 9
8"	1.8	16.0	10.3	6.5	7 9 11 17	200 160 128 80	24 19 16 12
10"	1.6	17.0	10.7	8.0	7 9 11 17	200 160 128 80	39 32 26 18
12"	1.5	19.1	12.8	8.0	7 9 11 17	200 160 128 80	62 51 43 29
14"	1.5	21.0	13.2	8.0	7 9 11 17	200 160 128 80	79 64 53 36
16"	1.5	24.0	14.0	8.0	7 9 11 17	200 160 128 80	112 91 76 51
18"	1.5	27.0	14.7	8.0	7 9 11 17	200 160 128 80	146 119 101 68

• IPS 3 Segment 45's Continued Next Page •

Other sizes, DR's and custom radius ell's not listed are available - Call For Quick Quote

Sizes 24" and smaller meet AWWA C906 fitting requirements, sizes 26" and larger are quoted per fitting.

Stub Ends - Butt Fusion (Molded)

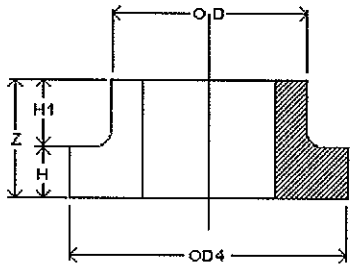

Dimensions

Nominal Pipe Size	OD	OD4	Z	H1	H	Rahn Part #: HDPE3408 Black	DR
1-¼" IPS	1.660	2.750	1.400	1.125	0.250	SE-125	DR9
1-½" IPS	1.900	3.000	1.500	1.250	0.250	SE-150	DR9
2" IPS	2.375	3.894	1.750	1.350	0.400	SE-2	DR7
3" IPS	3.500	4.900	2.250	1.560	0.690	SE-3	DR7
4" IPS	4.500	6.630	1.732	0.748	0.984	SE-4	DR9
5" IPS	5.563	7.543	2.008	1.024	0.984	SE-5	DR9
6" IPS	6.625	8.535	2.008	0.945	1.063	SE-6	DR9
8" IPS	8.625	10.760	2.244	0.984	1.260	SE-8	DR9
10" IPS	10.750	13.133	2.717	1.217	1.500	SE-10	DR7
12" IPS	12.750	15.525	3.150	1.400	1.750	SE-12	DR9
14" IPS	14.000	17.354	3.843	2.093	1.750	SE-14	DR9
16" IPS	16.000	19.317	3.937	1.575	2.362	SE-16	DR9
18" IPS	18.000	21.171	4.528	1.772	2.756	SE-18	DR9
20" IPS	20.000	23.435	4.724	1.968	2.756	SE-20	DR9

Specify SDR required when ordering.

Flange Adapter - Butt Fusion (Molded)

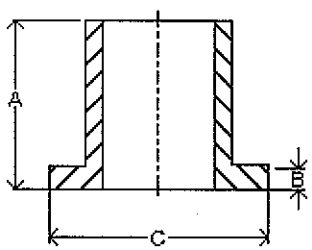

Dimensions

Nominal Pipe Size	A	B	C	Rahn Part #: HDPE3408 Black	DR
1-¼" IPS	6.000	0.250	2.750	3158B-125	DR9
1-½" IPS	6.000	0.275	3.125	3158B-150	DR9
2" IPS	6.000	0.450	3.875	3158B-2	DR7
3" IPS	6.000	0.600	5.000	3158B-3	DR5
4" IPS	6.000	1.000	6.600	3158B-4	DR5
4" DIPS	6.000	1.000	6.600	3158B-4-DIPS	DR9
5" IPS	8.000	1.100	7.515	3158B-5	DR9
6" IPS	8.000	1.100	8.500	3158B-6	DR5
6" DIPS	8.000	1.100	8.500	3158B-6-DIPS	DR9
8" IPS	9.000	1.500	10.600	3158B-8	DR7
10" IPS	12.000	1.500	12.750	3158B-10	DR9
12" IPS	12.000	1.775	15.500	3158B-12	DR9

BUP-SDR

Convoluted Flange/Backup Ring

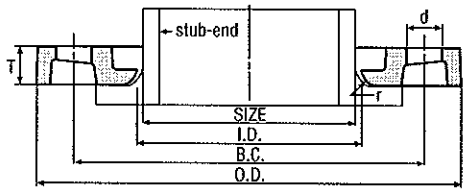

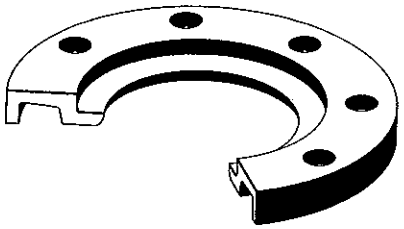

- **Description** Utilizes the patented IPP Deltaflex® flange cross section.
- **Utilization** HDPE and PP thermoplastic piping systems.
- **Materials** Ductile iron, ASTM A536-84.
- **Dimensions** Mate with all 150 lb flanges, ANSI B16.5, B16.47, B16.1 AWWA C207.
- **Finish** Red oxide primed, hot dip galvanized, epoxy coated.

Pipe Diameter	IPP Product Code	Outside Dia. O.D.	Flange Thickness T	Inside Dia. I.D.	Bolt Count N	Dia. Bolt Hole B.D.	Bolt Circle B.C.	Radius r	Weight lbs/pc	Operating[1] Pressure
1/2"	BUP-SDR7-0050C	3.50	0.50	0.90	4	0.63	2.38	0.13	1.0	267
3/4"	BUP-SDR7-0075C	3.88	0.50	1.11	4	0.63	2.75	0.13	1.0	267
1"	BUP-SDR7-01C	4.25	0.56	1.38	4	0.63	3.13	0.13	1.0	267
1 1/4"	BUP-SDR7-0125C	4.63	0.63	1.72	4	0.63	3.50	0.19	2.0	267
1 1/2"	BUP-SDR7-0150C	5.00	0.69	1.97	4	0.63	3.88	0.25	2.0	267
2"	BUP-SDR7-02C	6.00	0.75	2.46	4	0.75	4.75	0.31	3.0	267
2"	BUP-SDR11-02B	6.00	0.50	2.63	4	0.75	4.75	0.20	1.5	160
2 1/2"	BUP-SDR7-0250C	7.00	0.88	2.97	4	0.75	5.50	0.31	4.0	267
3"	BUP-SDR7-03C	7.50	0.94	3.60	4	0.75	6.00	0.40	4.0	267
3"	BUP-SDR11-03B	7.50	0.53	3.75	4	0.75	6.00	0.28	2.5	160
4"	BUP-SDR7-04C	9.00	0.94	4.60	8	0.75	7.50	0.40	5.5	267
4"	BUP-SDR11-04B	9.00	0.55	4.75	8	0.75	7.50	0.28	3.5	160
5"	BUP-SDR7-05C	10.00	0.94	5.69	8	0.88	8.50	0.44	6.0	267
6"	BUP-SDR7-06C	11.00	1.00	6.75	8	0.88	9.50	0.40	7.0	267
6"	BUP-SDR11-06B	11.00	0.63	6.88	8	0.88	9.50	0.28	4.5	160
8"	BUP-SDR7-08C	13.50	1.12	8.75	8	0.88	11.75	0.40	11.0	267
8"	BUP-SDR11-08B	13.50	0.85	8.88	8	0.88	11.75	0.28	8.0	160
10"	BUP-SDR7-10C	16.00	1.19	10.92	12	1.00	14.25	0.40	16.0	267
10"	BUP-SDR11-10B	16.00	0.98	11.00	12	1.00	14.25	0.31	12.0	160
12"	BUP-SDR7-12C	19.00	1.50	12.92	12	1.00	17.00	0.40	23.0	267
12"	BUP-SDR9.3-12B	19.00	1.25	13.13	12	1.00	17.00	0.31	22.0	192
12"	BUP-SDR11-12B	19.00	1.25	13.13	12	1.00	17.00	0.28	20.0	160
14"	BUP-SDR7-14C	21.00	1.63	14.18	12	1.13	18.75	0.40	37.0	267
14"	BUP-SDR11-14B	21.00	1.38	14.38	12	1.13	18.75	0.31	30.0	160
16"	BUP-SDR7-16C	23.50	1.88	16.19	16	1.13	21.25	0.40	49.0	267

1. Operating pressure on an HDPE stub-end with a safety factor of 2.

Continued for sizes 16" through 63" on pg. 12

Technical Specifications Gabion

Draft

GABION
GALVANIZED & PVC COATED

FORWARD

This document has been issued by MACCAFERRI CANADA LTD. in response to requests by customers for standard specifications and methods of measurement and payment and is intended as a guide only. These notes cover standard materials only. Certain clauses may not apply in their entirety to special materials. Maccaferri reserves the right to amend product specifications without notice and specifiers are requested to check as to the validity of the specifications they are using.

NOTES:

The following items have been changed or updated from previous versions. The current date of this specification is August 2005.

The following ASTM standards and specifications have been added or updated:

ASTM A975-97	Standard Specification for Double-Twisted Hexagonal Mesh Gabions and Revet Mattresses (Metallic-Coated Steel Wire or Metallic-Coated Steel Wire with Polyvinyl Chloride (PVC) Coating)
ASTM A641/A641M-03	Specification for Zinc Coated (Galvanized) Carbon Steel Wire
ASTM A370-97a	Test Methods and Definitions for Mechanical Testing of Steel Products
ASTM A313/A313M-98	Specification for Chromium-Nickel Stainless and Heat-Resisting Steel Spring Wire
ASTM A764-95(2001)	Specification for Steel Wire, Carbon, Drawn Galvanized and Galvanized at Size for Mechanical Springs
ASTM B117-97	Standard Practice for Operating Salt Spray (Fog) Apparatus
ASTM D1242-95a	Standard Test Methods for Resistance of Plastic Materials to Abrasion
ASTM D1499-99	Standard Practice for Filtered Open-Flame Carbon-Arc Exposures of Plastics
ASTM D2240-04	Standard Test Method for Rubber Property—Durometer Hardness
ASTM D412-98a	Standard Test Methods for Vulcanized Rubber and Thermoplastic Elastomers-Tension
ASTM D746-04	Standard Test Method for Brittleness Temperature of Plastics and Elastomers by Impact
ASTM D792-00	Standard Test Methods for Density and Specific Gravity (Relative Density) of Plastics by Displacement
ASTM G152-00	Standard Practice for Operating Open Flame Carbon Arc Light Apparatus for Exposure of Non-metallic Materials
UL 746B	Polymeric Materials-Long Term Property Evaluation

Gabion – Galvanized & PVC Coated
August 2005

1.0 Description

This work shall consist of furnishing, assembling, and filling woven wire mesh gabions with rock as specified in the contract to the dimensions, lines and grades shown on the plans, or as determined by the engineer. These specifications are in accordance with ASTM A975-97 and include gabions as manufactured for Maccaferri Canada Ltd.

2.0 Materials

2.1 Woven Mesh Gabions

2.1.1 Wire (Zinc Coated):

All tests on the wire must be performed prior to manufacturing the mesh.

- *Tensile strength*: both the wire used for the manufacture of gabions and the lacing wire, shall have a maximum tensile strength of 515 MPa, in accordance with ASTM A641/A641M-03.
- *Elongation*: the test must be carried out on a sample at least 300 mm long. Elongation shall not be less than 12%, in accordance with ASTM A370-97a.
- *Zinc coating*: minimum quantities of zinc according to ASTM A641/A641M-03, Class III soft temper coating.
- *Adhesion of zinc coating*: the adhesion of the zinc coating to the wire shall be such that, when the wire is wrapped six turns around a mandrel having four times the diameter of the wire, it does not flake or crack when rubbing it with the bare fingers, in accordance with ASTM A641/A641M-03.

2.1.2 PVC (Polyvinyl Chloride) Coating

- *Specific gravity*: 1.30-1.35 kg/dm^{3,} in accordance with ASTM D792-00, Table 1;
- *Hardness*: between 50 and 60 Shore D, according to ASTM D 2240-04;
- *Tensile strength*: not less than 20.6 MPa, according to ASTM D412-98a;
- *Modulus of elasticity*: not less than 18.6 MPa, according to ASTM D412-98a;
- *Abrasion resistance*: the percentage of the weight loss shall be less than 12%, according to ASTM D1242-95a.
- *Heat Aging Test*: prior to UV and abrasion degradation, the PVC polymer coating shall have a projected durability life of 60 years when tested in accordance with UL 746B.

The accelerated aging tests are:

- *Salt spray test*: test period 3,000 hours, test method ASTM B117-97;
- *Exposure to UV rays*: test period 3,000 hours at 63°C, test method ASTM D1499-99 and ASTM G152-00;
- *Brittleness temperature*: no higher than - 9°C, or lower temperature when specified by the purchaser, when tested in accordance with ASTM D746-04.

The properties after aging tests shall be as follows:

- *Appearance of coated mesh*: no cracking, stripping or air bubbles, and no appreciable variation in color;
- *Specific gravity*: variations shall not exceed 6%;
- *Hardness*: variations shall not exceed 10%;
- *Tensile strength*: variations shall not exceed 25%;
- *Modulus of elasticity*: variations shall not exceed 25%;
- *Abrasion resistance*: variations shall not exceed 10%;
- *Brittleness temperature*: shall not exceed +18°C.

2.1.3 Galvanized and PVC coated wire mesh gabions (8 x 10 mesh type):

- *PVC coating thickness:* Nominal – 0.5 mm, Minimum – 0.38 mm
- *Mesh Wire*: Diameter – 2.70 mm internal, 3.70 mm external
- *Selvedge Wire*: Diameter – 3.40 mm internal, 4.40 mm external
- *Mesh Opening*: Nominal Dimension D = 83 mm, as per Fig. 1.

2.1.4 Galvanized and PVC coated lacing wire and internal stiffeners:

- *PVC coating thickness:* Nominal – 0.5 mm, Minimum – 0.38 mm
- *Lacing wire*: Diameter – 2.20 mm internal, 3.20 mm external
- *Cross Tie/Stiffener wire*: Diameter - 2.20 mm internal, 3.20 mm external
- *Preformed Stiffener:* Diameter – 3.40 mm internal, 4.40 mm external

2.1.5 Steel Mesh properties

- *Mesh Tensile Strength:* shall have a minimum strength of 42.3 kN/m when tested in accordance with ASTM A975 section 13.1.1.
- *Punch Test Resistance:* shall have a minimum resistance of 23.6 kN/m when tested in accordance with ASTM A975 section 13.1.4.
- *Connection to selvedges:* shall have a minimum resistance of 17.5 kN/m when tested in accordance with ASTM A975.

2.1.6 Spenax Fasteners (Overlapping Fasteners):

Overlapping stainless steel fasteners may be used in lieu of, or to complement, lacing wire for basket assembly and installation. The spacing of the fasteners during all phases of assembly and installation shall be in accordance with spacing based on 17.5 kN/m, pull apart resistance for PVC coated mesh tested in accordance with ASTM A975 section 13.1.2 and with a nominal spacing of 100 mm, and not to exceed 150 mm.

- *Stainless steel fasteners*: diameter: 3.05 mm, according to ASTM A313/A313M-98, Type 302, Class I.
- *Tensile strength:* 1530 to 1744 MPa in accordance with ASTM A313/A313M-98.
- *Proper installation of rings:* A properly formed Spenax fastener shall have a nominal overlap of 25mm after closure (Fig. 2).

2.2 Tolerances

- *Wire*: Zinc coating, in accordance with ASTM A641/A641M-03, Class III soft temper coating.
- *Gabions*: ± 5 % on the length, width, and height.
- *Mesh opening*: Tolerances on the hexagonal, double twisted wire mesh opening shall not exceed ± 10% on the nominal dimension D values (see Fig.1):

Fig. 1

Mesh Type	Nominal Dimension D
8 x 10	83 mm

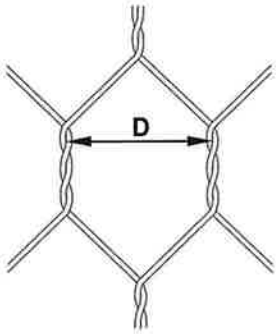

Fig. 2

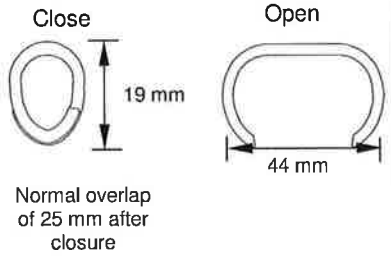

2.3 Standard Unit Size

Table of sizes for gabions			
L=Length (m)	W=Width (m)	H=Height (m)	# of cells
2	1	1	2
3	1	1	3
4	1	1	4
2	1	0.5	2
3	1	0.5	3
4	1	0.5	4
2	1	0.3	2
3	1	0.3	3
4	1	0.3	4

All sizes and dimensions are nominal. Tolerances of ± 5% of the width, and length height, of the gabions shall be permitted.

2.4 Fabrication

Gabions shall be manufactured and shipped with all components mechanically connected at the production facility. The front, base, back and lid of the gabions shall be woven into a single unit. The ends and diaphragm(s) shall be factory connected to the base. All perimeter edges of the mesh forming the basket and top, or lid, shall be selvedged with wire having a larger diameter.

The gabion is divided into cells by means of diaphragms positioned at approximately 1 m centers. The diaphragms shall be secured in position to the base so that no additional lacing is necessary at the jobsite. See Figure 3.

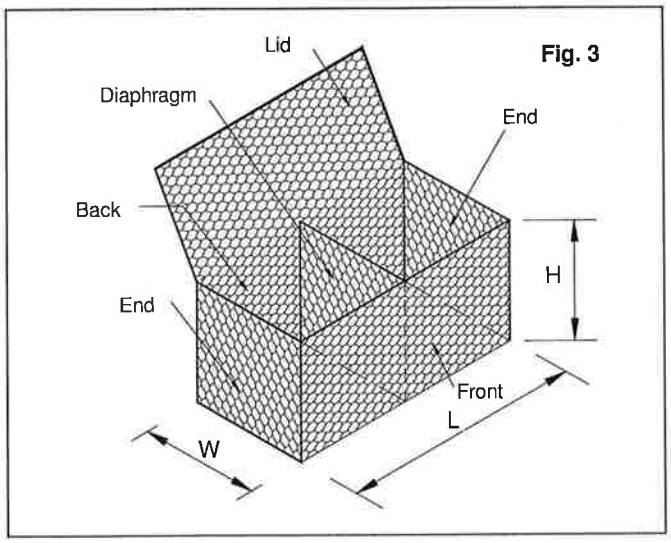

Fig. 3

2.5 Rock

The rock for gabions shall be hard, angular to round, durable and of such quality that they shall not disintegrate on exposure to water or weathering during the life of the structure. Gabion rocks shall range between 100 mm and 200 mm. The range in sizes shall allow for a variation of 5% oversize and/or 5% undersize rock, provided it is not placed on the

gabion exposed surface. The size shall be such that a minimum of three layers of rock must be achieved when filling a 1m high gabion.

3.0 Construction Requirements

3.1 Assembly

Gabions are supplied folded flat and packed in bundles. The units are assembled individually by erecting the sides, ends, and diaphragms, ensuring that all panels are in the correct position, and the tops of all sides are aligned. The four corners shall be connected first, followed by the internal diaphragms to the outside walls. All connections should use lacing wire or fasteners as previously described in Section 2.1.4 and Section 2.1.6.

The procedure for using lacing wire consists of cutting a sufficient length of wire, and first looping and/or twisting to secure the lacing wire to the wire mesh. Proceed to lace with alternating double and single loops through every mesh opening approximately every 150 mm, pulling each loop tight and finally securing the end of the lacing wire to the wire mesh by looping and/or twisting.

The use of fasteners shall be in accordance with the manufacturer's recommendations as specified in Section 2.1.6.

3.2 Installation

After initial assembly, the gabions are carried to their final position and are securely joined together along the vertical and top edges of their contact surfaces using the same connecting procedure(s) described in Section 3.1. Whenever a structure requires more than one layer, the upper empty baskets shall also be connected to the top of the lower layer along the front and back edges of the contact surface using the same connecting procedure(s) described in Section 3.1.

3.3 Filling

Gabions shall be filled with rock as specified in Section 2.4. During the filling operation some manual stone placement is required to minimize voids. The exposed faces of vertical structures shall be carefully hand placed to give a neat, flat, and compact appearance. Care shall be taken when placing fill material to ensure that the sheathing on the PVC coated baskets is not damaged.

The cells shall be filled in stages so that local deformation may be avoided. That is, at no time shall any cell be filled to a depth exceeding 300 mm higher than the adjoining cell. It is also recommended to slightly overfill the baskets by 25 to 50 mm to allow for settlement of the rock. Behind gabion walls, compact the backfill material simultaneously to the same level as the filled gabions.

3.4 Internal Connecting Wires

MacTie preformed stiffeners or lacing wire can be used as internal connecting wires when a structure requires more than one layer of gabions to be stacked on top of each other. Internal Connecting Wires with lacing wire shall connect the exposed face of a cell to the opposite side of the cell. Internal Connecting Preformed stiffeners shall connect the exposed face of a cell to the adjacent side of the cell. Preformed stiffeners are installed at 45° to the face/side of the unit, extending an equal distance along each side to be braced (approximately 300 mm). An exposed face is any side of a gabion cell that will be exposed or unsupported after the structure is completed.

3.4.1 1 m High Gabions

1 m high gabions shall be filled in three layers, 300 mm at a time. Connecting wires/bracings shall be installed after the placement of each layer, that is, at 300 mm high and 600 mm high.

3.4.2 0.5 m High Gabions

0.5 m high gabions do not require connecting wires/bracings unless the baskets are used to build vertical structures. In some cases, these units shall be filled in two layers, 250 mm at a time. Connecting wires shall be installed after the placement of the first layer, which is at 250 mm high.

3.5 Lid Closing

Once the gabion baskets are completely full, the lids will be pulled tight until the lid meets the perimeter edges of the basket. A tool such as a lid closer can be used. The lid must then be tightly laced and/or fastened along all edges, ends and tops of diaphragm(s) in the same manner as described in Section 3.1.

3.6 Mesh cutting and folding

Where shown on the drawings or otherwise directed by the engineer, the gabions shall be cut, folded and fastened together to suit site conditions. The mesh must be cleanly cut and surplus mesh either folded back or overlapped so that it can be securely fastened together with lacing wire or fasteners in the manner described in Section 3.1. Any reshaped gabions shall be assembled, installed, filled and closed as specified in the previous sections.

4.0 Method of Measurement

4.1 The payment quantities for excavation shall be determined by the outside limits of the gabion structure. Quantities will be determined from cross sections and the linear distance, and paid for under the appropriate excavation bid items.

4.2 The quantity to be paid for "In place gabions" shall be the number of cubic meters of gabions measured in their final position. Project conditions and material availability will determine the actual size of gabions to be used.

4.3 Excavated material beyond the limits of the gabions shall be backfilled with gravel, crushed rock or other material approved by the engineer.

4.4 This bid price shall include the installed in place cost of all materials, equipment, and labor, including gabions, rock, and backfill material.

5.0 Basis of Payment

Accepted gabions will be paid for at the unit price for each pay item included in the contract.

Headquarters:	**MACCAFERRI CANADA LTD.**	Halifax, NS	tel: 902-468-8615
400 Collier MacMillan Drive, Unit B		Montréal, QC	tel: 450-674-6800
Cambridge, ON, N1R 7H7	e-mail: hq@maccaferri-canada.com	Edmonton, AB	tel: 780-447-2719
tel: 519-623-9990 / fax: 519-623-1309	Website: www.maccaferri.com	Vancouver, BC	tel: 604-683-4824

© 2005 Maccaferri Canada Ltd. Printed in Canada

MACCAFERRI
Maccaferri Canada Ltd.

TECHNICAL DATA SHEET

MACTEX
MX225S NONWOVEN GEOTEXTILE

MacTex MX225S is a needle-punched nonwoven geotextile made of 100% polypropylene staple fibres, which are formed into a random network for dimensional stability. MacTex MX225S resists ultraviolet deterioration, rotting, biological degradation, naturally encountered basics and acids. Polypropylene is stable within a pH range of 2 to 13. MacTex MX225S conforms to the physical property values listed below:

PROPERTY	TEST METHOD	UNIT	M.A.R.V. (Minimum Average Roll Value)
Weight (Typical)	ASTM D 5261	g/m^2	203
Grab Tensile	ASTM D 4632	kN	0.711
Grab Elongation	ASTM D 4632	%	50
Trapezoid Tear Strength	ASTM D 4533	kN	0.289
Puncture Resistance	ASTM D 4833	kN	0.40
Mullen Burst Strength	ASTM D 3786	kPa	2170
Permittivity*	ASTM D 4491	sec^{-1}	1.6
Water Flow*	ASTM D 4491	$l/min/m^2$	4480
AOS*	ASTM D 4751	US Sieve (mm)	70 (0.212)
UV Resistance	ASTM D 4355	%/hrs	70/500

PACKAGING	
Roll Dimensions (W x L) – m	3.81 x 109.8/ 4.57 x 91.5
Square Metres Per Roll	418
Estimated Roll Weight – kgs	88.6

* At the time of manufacturing. Handling may change these properties.

Seller makes no warranty, express or implied, concerning the product furnished hereunder other than at the time of delivery it shall be of the quality and specifications stated herein. *ANY IMPLIED WARRANTY OF FITNESS FOR A PARTICULAR PURPOSE IS EXPRESSLY EXCLUDED AND, TO THE EXTENT THAT IT IS CONTRARY TO THE FOREGOING SENTENCE ANY IMPLIED WARRANTY OF MERCHANTABILITY IS EXPRESSLY EXCLUDED.* Any recommendations made by the Seller concerning uses or applications of said product are believed reliable, and Seller makes no warranty of results to be obtained. The technical information supplied for this product type is subject to change at any time without notice.

This Data Sheet supercedes all previous Data Sheets for this style and is subject to change without notice.

MTEX-MX225S 09/04

Headquarters:
400 Collier MacMillan Drive, Unit B
Cambridge, ON N1R 7H7, Canada
tel: 519-623-9990 / fax: 519-623-1309
Toll Free: 1-800-668-9396

MACCAFERRI CANADA LTD.
e-mail: hq@maccaferri-canada.com
Website: www.maccaferri-canada.com

Halifax, NS tel: 902-468-8615
Montréal, QC tel: 450-674-6800
Edmonton, AB tel: 780-447-2719
Vancouver, BC tel: 604-683-4824

© 2005 Maccaferri Canada Ltd. Printed in Canada

GABION MAT
GALVANIZED & PVC COATED

FORWARD

This document has been issued by MACCAFERRI CANADA LTD. in response to requests by customers for standard specifications and methods of measurement and payment and is intended as a guide only. These notes cover standard materials only. Certain clauses may not apply in their entirety to special materials. Maccaferri reserves the right to amend product specifications without notice and specifiers are requested to check as to the validity of the specifications they are using.

NOTES:

The following items have been changed or updated from previous versions. The current date of this specification is April 2006.

The following ASTM standards and specifications have been added or updated:

ASTM A313/A 313M-98	Standard Specification for Stainless Steel Spring Wire
ASTM A370-97a	Standard Test Methods and Definitions for Mechanical Testing of Steel Products
ASTM A641/A641M-03	Standard Specification for Zinc-Coated (Galvanized) Carbon Steel Wire
ASTM B117-97	Standard Practice for Operating Salt Spray (Fog) Apparatus
ASTM D1242-95a	Standard Test Methods for Resistance of Plastic Materials to Abrasion
ASTM D1499-99	Standard Practice for Filtered Open-Flame Carbon-Arc Exposures of Plastics
ASTM D2240-04	Standard Test Method for Rubber Property—Durometer Hardness
ASTM D412-98a	Standard Test Methods for Vulcanized Rubber and Thermoplastic Elastomers-Tension
ASTM D746-04	Standard Test Method for Brittleness Temperature of Plastics and Elastomers by Impact
ASTM D792-00	Standard Test Methods for Density and Specific Gravity (Relative Density) of Plastics by Displacement
ASTM G152-00	Standard Practice for Operating Open Flame Carbon Arc Light Apparatus for Exposure of Non-metallic materials.
UL 746B	Polymeric Materials- Long Term Property Evaluation

Gabion Mat-Galvanized & PVC Coated
April 2006

1.0 Description

This work shall consist of furnishing, assembling and filling woven wire mesh containers with rock to form gabion mats as specified in the contract in conformity with the dimensions, lines and grades shown on the plans, or as determined by the engineer and manufacturer.

2.0 Materials

2.1 Woven Mesh Gabion Mats

2.1.1 Wire (Zinc Coated)

All tests on wire must be performed prior to manufacturing the mesh.

- *Tensile strength:* both the wire used for the manufacture of gabion mats and the lacing wire, shall have a maximum tensile strength of 38 – 48 kg/mm^2, in accordance with ASTM A641-97.
- *Elongation:* the test must be carried out on a sample at least 30 cm long. Elongation shall not be less than 12%, in accordance with ASTM A370-97a.
- *Zinc coating:* minimum quantities of zinc according to ASTM A641/A641M-03, Class III soft temper coating.
- *Adhesion of zinc coating:* the adhesion of the zinc coating to the wire shall be such that, when the wire is wrapped six turns round on a mandrel having four times the diameter of the wire, it does not flake or crack when rubbing it with the bare fingers, in accordance with ASTM A641/A641M-03 for zinc coating.

2.1.2 PVC (Polyvinyl Chloride) Coating

When specified in the plans:

- *Specific gravity:* 1.30-1.35 kg/dm^3, in accordance with ASTM D792-00, Table 1,
- *Hardness:* between 50 and 60 Shore D, according to ASTM D2240-04,
- *Tensile strength:* not less than 20.6 MPa, according to ASTM D412-98a,
- *Modulus of elasticity:* not less than 18.6 MPa, in accordance with ASTM D412-98a,
- *Abrasion resistance:* the percentage of the weight loss shall be less than 12%, according to ASTM D1242-95a.
- *Heat Aging Test*: prior to UV and Abrasion degradation, the PVC polymer coating shall have a projected durability life of 60 years when tested in accordance with UL 746B.

The accelerated aging tests are:

- *Salt spray test:* test period 3,000 hours, test method ASTM B117-97,
- *Exposure to UV rays:* test period 3,000 hours at 63°C, test method ASTM D1499-99 and ASTM G152-00.
- *Brittleness temperature:* no higher than - 9°C, or lower temperature when specified by the purchaser, when tested in accordance with ASTM D746-04.

The properties after aging tests shall be as follows:

- *Appearance of coated mesh:* no cracking, stripping or air bubbles, and no appreciable variation in color;
- *Specific gravity:* variations shall not exceed 6%;
- *Hardness:* variations shall not exceed 10%;
- *Tensile strength:* variations shall not exceed 25%;
- *Modulus of elasticity:* variations shall not exceed 25%;
- *Abrasion resistance:* variations shall not exceed 10%;
- *Brittleness temperature:* shall not exceed +18°C.

2.3 Standard Unit Size

Table of sizes for gabion mats			
L=Length (m)	W=Width (m)	H=Height (m)	# of cells
30	2	0.23	20
30	3	0.23	30
30	2	0.3	20
30	3	0.3	30

2.4 Fabrication

Gabion mattresses shall be manufactured with all components mechanically connected at the production facility with the exception of the lid, which is produced separately from the base. The base, sides and ends of the gabion mats shall be woven into a single unit. The diaphragms are connected to the base in the factory. All perimeter edges of the mesh forming the base and lid shall be selvedged with selvedge wire.

The gabion mat is divided into cells by means of diaphragms. The diaphragms create cells of 1 m by 3 m. The diaphragms shall be secured in position of the base so that no additional tying is necessary at the jobsite.

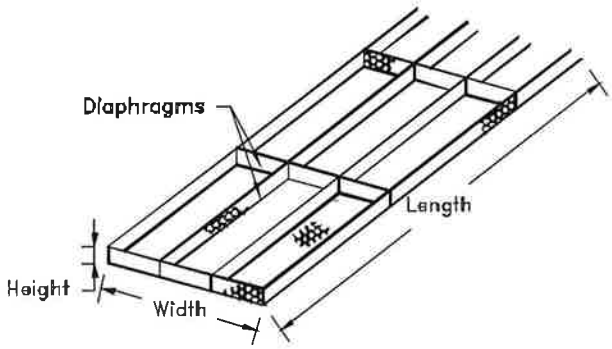

2.5 Rock

All rock shall be hard, angular to round, durable and of such quality that they shall not disintegrate on exposure to water or weathering during the life of the structure. Also, the size shall be such that a minimum of two layers of rock can be achieved when filling any gabion mat. Any rock smaller than the minimum size can not be less than 5% by weight; any rock greater than the maximum size can not be greater than 5% by weight, provided it is not on the exposed surface of the gabion mat.

- Gabion Mat rock shall be in the full range size of the lower and upper limits - 100-200 mm.

3.0 Construction Requirements

3.1 Assembly

Gabion mats are supplied in rolls, the base in one roll and the lid in another. The units shall be assembled individually by erecting the sides, ends and diaphragms ensuring that all panels are in the correct position and the tops of all sides are aligned. The four corners of the unit shall be connected first, followed by the internal diaphragms to the sides. All connections should be accomplished using lacing wire or fasteners as previously described in Section 2.1.4 and Section 2.1.5.

The recommended procedure to apply lacing wire consists of first cutting a sufficient length of wire. Secure one end of the wire by looping and twisting, then proceed to lace with alternating single and double loops every mesh opening (approximately every 100 mm) and securely fasten the other end of the lacing wire.
The installation of the fasteners specified in Section 2.1.5 shall be in accordance with the manufacturer's recommendations.

3.2 Installation

Initial assembly should occur with the gabion mats in their final position. The adjacent empty mats must be securely joined together using the same connecting procedure(s) described in Section 3.1 along the vertical and top edges of their contact surfaces.

3.3 Filling

Gabion mats shall be filled with rock as specified in Section 2.5. During the filling operation or placement some manual stone is required to minimize voids. Care shall be taken when placing fill material to ensure that the PVC sheathing is not damaged.

The cells in any row shall be filled in stages so that local deformation may be avoided. It is also recommended to slightly overfill the baskets 25 to 50 mm to allow for settlement of the rock.

3.4 Lid Closing

Once the mats are completely full, the lids shall be pulled tight using a tool such as a lid closer until the lid meets the perimeter edges of the mattress. The lid shall then be tightly laced and/or fastened along all edges, ends and tops of diaphragms in the same manner as described in Section 3.1.

3.4 Mesh cutting and folding

Where shown on the drawings or otherwise directed by the engineer, the gabion mat mesh shall be cut, folded and fastened together to suit existing site conditions. The mesh must be cleanly cut and the surplus mesh folded back and neatly wired to an adjacent gabion mat. The cut edges of the mesh shall be securely fastened together with lacing wire or fasteners in the manner described in Section 3.1. Any reshaped gabion mats shall be assembled, installed, filled and closed as specified in the previous sections.

4.0 Method of Measurement

4.1 The pay limits for excavation of gabion mats shall be a line coincident with the bottom and non-exposed side of the mattresses. Excavation quantities will be determined from the cross sections and paid for under the appropriate classified excavation items.

4.2 The quantity to be paid for "In Place Gabion Mats" shall be the number of square meters of mattresses measured in their final position. Job conditions and availability will determine the actual size of gabion mats to be used.

4.3 Excavated material beyond the limits of the mats shall be backfilled with gravel, crushed rock or other material meeting the approval of the engineer.

4.4 This bid price shall include the cost of furnishing all labor, materials, and equipment including mattresses, rock, and backfill material installed in place.

5.0 Basis of Payment

Accepted gabion mats will be paid for at the unit price for each of the pay items included in the contract.

Headquarters: 400 Collier MacMillan Drive, Unit B Cambridge, ON, N1R 7H7 tel: 519-623-9990 / fax: 519-623-1309	**MACCAFERRI INC.** e-mail: hq@maccaferri-canada.com Website: www.maccaferri.com	Halifax, NS Montréal, QC Edmonton, AB Vancouver, BC	tel: 902-468-8615 tel: 450-420-1845 tel: 780-447-2719 tel: 604-683-4824

© 2006 Maccaferri Canada Ltd. Printed in Canada

Technical Specifications Bentofix

Draft

BENTOFIX TECHNOLOGIES, INC.

23 Truman Road
Barrie, ON L4M 6E7 Canada

Tel: 705-725-1938
Fax: 705-725-8860

BENTOFIX® MANUFACTURING CERTIFICATION

CUSTOMER: TERRAFIX GEOSYNTHETICS, INC.

PROJECT: TERRAFIX- QUEBEC CITY **# ROLLS:** 80

ORDER NO.: BH-07-24/08 **PRODUCT TYPE:** BENTOFIX® NWL

Bentofix Technologies, Inc. hereby certifies that the Bentofix® Geosynthetic Clay Liner purchased and shipped for the above referenced project does meet or exceed Bentofix Technologies, Inc.'s specifications for Bentofix®.

The Bentofix® product has been continuously inspected for the presence of needles and is certified to be needle free.

BENTONITE testing was performed as follows:

Swell Index	ASTM D 5890	1/100,000 lbs (50,000 kg)
Moisture Content	ASTM D 4643	1/100,000 lbs (50,000 kg)
Fluid Loss	ASTM D 5891	1/100,000 lbs (50,000 kg)

GEOTEXTILE testing on the raw materials was performed as follows:

Mass Per Unit Area	ASTM D 5261	1/200,000 ft² [20,000 mt²]

GEOSYNTHETIC CLAY LINER testing on the finished product was performed as follows:

Bentonite Mass Per Unit Area	ASTM D 5993	1/40,000 ft² [4,000 mt²]
Grab Tensile/Elongation / Peel Strength	ASTM D 4632	1/40,000 ft² [4,000 mt²]
Hydraulic Conductivity	ASTM D 5084	Weekly
Index Flux	ASTM D 5887	Weekly
**certified to meet the required specification of < 1x 10^{-9} $m^3/m^2/s$*		
Internal Shear	ASTM D 6243	Periodically

** hydrated 24 hours and sheared under 200 psf normal stress is certified to be 500 psf*

The LOT and ROLL numbers for this shipment are as follows:

LOT# 18072504---

ROLL# ---- SEE ATTACHED----

BENTOFIX LAB APPROVAL

7-29-08.
DATE

BENTOFIX TECHNOLOGIES, INC.

23 TRUMAN ROAD
BARRIE, ON L4M 6E7

TEL: 705-725-1938
FAX: 705-725-8860

BENTOFIX ROLL LIST

PROJECT: TERRAFIX-QUEBEC CITY
LOT # 18072504
STYLE: NWL
DATE: JULY 28, 2008.

	BENTOFIX ROLL #	LENGTH (m)	WIDTH (m)
1	110301	45.72	4.72
2	110302	45.72	4.72
3	110303	45.72	4.72
4	110304	45.72	4.72
5	110305	45.72	4.72
6	110306	45.72	4.72
7	110307	45.72	4.72
8	110308	45.72	4.72
9	110309	45.72	4.72
10	110310	45.72	4.72
11	110311	45.72	4.72
12	110312	45.72	4.72
13	110313	45.72	4.72
14	110314	45.72	4.72
15	110315	45.72	4.72
16	110316	45.72	4.72
17	110317	45.72	4.72
18	110318	45.72	4.72
19	110319	45.72	4.72
20	110320	45.72	4.72
21	110321	45.72	4.72
22	110322	45.72	4.72
23	110323	45.72	4.72
24	110324	45.72	4.72
25	110325	45.72	4.72
26	110326	45.72	4.72
27	110327	45.72	4.72
28	110328	45.72	4.72
29	110329	45.72	4.72
30	110330	45.72	4.72

BENTOFIX TECHNOLOGIES, INC.

23 TRUMAN ROAD
BARRIE, ON L4M 6E7

TEL: 705-725-1938
FAX: 705-725-8860

BENTOFIX ROLL LIST

PROJECT: TERRAFIX-QUEBEC CITY
LOT # 18072504
STYLE: NWL
DATE: JULY 28, 2008.

	BENTOFIX ROLL #	LENGTH (m)	WIDTH (m)
31	110331	45.72	4.72
32	110332	45.72	4.72
33	110333	45.72	4.72
34	110334	45.72	4.72
35	110335	45.72	4.72
36	110336	45.72	4.72
37	110337	45.72	4.72
38	110338	45.72	4.72
39	110339	45.72	4.72
40	110340	45.72	4.72
41	110341	45.72	4.72
42	110342	45.72	4.72
43	110343	45.72	4.72
44	110344	45.72	4.72
45	110345	45.72	4.72
46	110346	45.72	4.72
47	110347	45.72	4.72
48	110348	45.72	4.72
49	110349	45.72	4.72
50	110350	45.72	4.72
51	110351	45.72	4.72
52	110352	45.72	4.72
53	110353	45.72	4.72
54	110354	45.72	4.72
55	110355	45.72	4.72
56	110356	45.72	4.72

BENTOFIX TECHNOLOGIES, INC.

23 TRUMAN ROAD
BARRIE, ON L4M 6E7

TEL: 705-725-1938
FAX: 705-725-8860

BENTOFIX ROLL LIST

PROJECT: TERRAFIX-QUEBEC CITY
LOT # 18072504
STYLE: NWL
DATE: JULY 28, 2008.

	BENTOFIX ROLL #	LENGTH (m)	WIDTH (m)
57	110357	45.72	4.72
58	110358	45.72	4.72
59	110359	45.72	4.72
60	110360	45.72	4.72
61	110361	45.72	4.72
62	110362	45.72	4.72
63	110363	45.72	4.72
64	110364	45.72	4.72
65	110365	45.72	4.72
66	110366	45.72	4.72
67	110367	45.72	4.72
68	110368	45.72	4.72
69	110369	45.72	4.72
70	110370	45.72	4.72
71	110371	45.72	4.72
72	110372	45.72	4.72
73	110373	45.72	4.72
74	110374	45.72	4.72
75	110375	45.72	4.72
76	110376	45.72	4.72
77	110377	45.72	4.72
78	110378	45.72	4.72
79	110379	45.72	4.72
80	110380	45.72	4.72

BENTOFIX TECHNOLOGIES INC.

Quality Control Certificate

Lot #	Roll #	Date Produced	Product	Length	Width	BOL#
18072504	110301	7/25/2008	BENTOFIX NWL	150.00 ft 45.72 m	15.5 ft 4.72 m	

FINISHED PRODUCT

Type	NWL	
GCL Mass Per Unit Area ASTM D 5993	5,009 g/m²	1.025 lb/ft²
Grab Tensile Strength ASTM D 4632	106 kg	233.7 lb
Elongation	113 %	
Peel Strength ASTM D 4632 mod	15.2 kg	33.5 lb
Hydraulic Conductivity ASTM D 5887	$<5x10^{-9}$ cm/s	
Index Flux ASTM D 5887	$<1x10^{-8}$ m³/m²/s	

TOP LAYER

Type	Non-Woven	
Lot #	080716205B-2	
Mass Per Unit Area ASTM D 5261	249 g/m²	7.34 oz/yd²

BOTTOM LAYER

Type	Non-Woven	
Lot #	080717215B	
Mass Per Unit Area ASTM D 5261	221 g/m²	6.52 oz/yd²

BENTONITE

Lot #	422193	
Moisture Content ASTM D 4643	7.50 %	
Swell Index ASTM D 5890	30.0 ml	
Fluid Loss ASTM D 5891	15.6 ml	
Bentonite Mass Per Unit Area @ 0% mc ASTM D 5993	4,199 g/m²	0.859 lb/ft²

BENTOFIX TECHNOLOGIES INC.

Quality Control Certificate

Lot #	Roll #	Date Produced	Product	Length	Width	BOL#
18072504	110301	7/25/2008	BENTOFIX NWL	150.00 ft 45.72 m	15.5 ft 4.72 m	

FINISHED PRODUCT

Type	NWL	
GCL Mass Per Unit Area ASTM D 5993	5,009 g/m²	1.025 lb/ft²
Grab Tensile Strength ASTM D 4632	106 kg	233.7 lb
Elongation	113 %	
Peel Strength ASTM D 4632 mod	15.2 kg	33.5 lb
Hydraulic Conductivity ASTM D 5887	$<5x10^{-9}$ cm/s	
Index Flux ASTM D 5887	$<1x10^{-8}$ m³/m²/s	

TOP LAYER

Type	Non-Woven	
Lot #	080716205B-2	
Mass Per Unit Area ASTM D 5261	249 g/m²	7.34 oz/yd²

BOTTOM LAYER

Type	Non-Woven	
Lot #	080717215B	
Mass Per Unit Area ASTM D 5261	221 g/m²	6.52 oz/yd²

BENTONITE

Lot #	422193	
Moisture Content ASTM D 4643	7.50 %	
Swell Index ASTM D 5890	30.0 ml	
Fluid Loss ASTM D 5891	15.6 ml	
Bentonite Mass Per Unit Area @ 0% mc ASTM D 5993	4,199 g/m²	0.859 lb/ft²

BENTOFIX TECHNOLOGIES INC.

Quality Control Certificate

Lot #	Roll #	Date Produced	Product	Length	Width	BOL#
18072504	110349	7/28/2008	BENTOFIX NWL	150.00 ft 45.72 m	15.5 ft 4.72 m	

FINISHED PRODUCT

Type	NWL	
GCL Mass Per Unit Area ASTM D 5993	4,937 g/m²	1.011 lb/ft²
Grab Tensile Strength ASTM D 4632	96 kg	211.6 lb
Elongation	101 %	
Peel Strength ASTM D 4632 mod	15.1 kg	33.3 lb
Hydraulic Conductivity ASTM D 5887	$<5x10^{-9}$ cm/s	
Index Flux ASTM D 5887	$<1x10^{-8}$ m³/m²/s	

TOP LAYER

Type	Non-Woven	
Lot #	080722205B	
Mass Per Unit Area ASTM D 5261	250 g/m²	7.37 oz/yd²

BOTTOM LAYER

Type	Non-Woven	
Lot #	080717215B	
Mass Per Unit Area ASTM D 5261	221 g/m²	6.52 oz/yd²

BENTONITE

Lot #	422193	
Moisture Content ASTM D 4643	7.50 %	
Swell Index ASTM D 5890	30.0 ml	
Fluid Loss ASTM D 5891	15.6 ml	
Bentonite Mass Per Unit Area @ 0% mc ASTM D 5993	4,131 g/m²	0.846 lb/ft²

BENTOFIX TECHNOLOGIES INC.

Quality Control Certificate

Lot #	Roll #	Date Produced	Product	Length	Width	BOL#
18072504	110365	7/28/2008	BENTOFIX NWL	150.00 ft 45.72 m	15.5 ft 4.72 m	

FINISHED PRODUCT

Type	NWL	
GCL Mass Per Unit Area ASTM D 5993	4,970 g/m²	1.017 lb/ft²
Grab Tensile Strength ASTM D 4632	92 kg	202.8 lb
Elongation	116 %	
Peel Strength ASTM D 4632 mod	9.5 kg	20.9 lb
Hydraulic Conductivity ASTM D 5887	$<5x10^{-9}$ cm/s	
Index Flux ASTM D 5887	$<1x10^{-8}$ m³/m²/s	

TOP LAYER

Type	Non-Woven	
Lot #	080722205B	
Mass Per Unit Area ASTM D 5261	250 g/m²	7.37 oz/yd²

BOTTOM LAYER

Type	Non-Woven	
Lot #	080717215B	
Mass Per Unit Area ASTM D 5261	221 g/m²	6.52 oz/yd²

BENTONITE

Lot #	422193	
Moisture Content ASTM D 4643	7.50 %	
Swell Index ASTM D 5890	30.0 ml	
Fluid Loss ASTM D 5891	15.6 ml	
Bentonite Mass Per Unit Area @ 0% mc ASTM D 5993	4,162 g/m²	0.852 lb/ft²

[redacted]

BENTOFIX TECHNOLOGIES, INC.

23 Truman Road
Barrie, ON
L4M 6E7 Canada

TEL: 705-725-1938
FAX: 705-725-8860

PROJECT: TERRAFIX-QUEBEC CITY
LOT # : 18072504

BENTONITE LABORATORY ANALYSIS

DATE:	July 25, 2008.	**RAILCAR #:**	BNSF 422193
SUPPLIER:	LOVELL, WY.	**TYPE:**	BARAKADE LD 30

SAMPLE #: 1

1. Moisture content according to ASTM D2216 mod:

   % of moisture = 7.5

2. Swell Test according to ASTM D5890:

   Swell Index = 30 ml/2g

3. Fluid loss according to ASTM D5891:

   Fluid Loss = 15.6 ml

SAMPLE #: 2

1. Moisture content according to ASTM D2216 mod:

   % of moisture = 8.7

2. Swell Test according to ASTM D5890:

   Swell Index = 31 ml / 2g

3. Fluid loss according to ASTM D5891:

   Fluid Loss = 16.0 ml

TESTING COMPLETED BY: DAMON WHEELER

Technical Specifications Thermistors

Draft

INSTRUCTION MANUAL

THERMISTOR STRING

Model TH-C

© Roctest Limited, 2010. All rights reserved.

This product should be installed and operated only by qualified personnel. Its misuse is potentially dangerous. The Company makes no warranty as to the information furnished in this manual and assumes no liability for damages resulting from the installation or use of this product. The information herein is subject to change without notification.

Tel.: 1.450.465.1113 • 1.877.ROCTEST (Canada, USA) • 33 (1) 64.06.40.80 (Europe) • www.roctest.com • www.telemac.fr

E1133E-17062010

TABLE OF CONTENTS

1 PRODUCT 1
1.1 General description 1
1.2 Specifications 2
1.3 Operation principle 2
2 READING PROCEDURE 2
2.1 MB-6T Readout Unit 2
2.2 Ohmmeter 3
2.3 SENSLOG Data Acquisition System 3
2.4 Quick verification of measurements 5
3 CONVERSION OF RESISTANCE READINGS 5
3.1 Polynomial approximation 5
3.2 Another relation 6
4 TROUBLESHOOTING 6
4.1 Unstable reading 6
4.2 No reading 7
5 MISCELLANEOUS 7

1 PRODUCT

1.1 GENERAL DESCRIPTION

Roctest manufactures a thermistor string to measure the temperature at different deepness's. The thermistor string is a multi-conductor cable with individual temperature sensors distributed along the cable. The chains can be submerged underwater as well as underground. The cable is flexible even at low temperature. The thermistor arrays are customizable to the customer needs.

Figure 1: TH-C Thermistor String

The string is made of a thermistor embedded in a PVC cable. The sensor location is reinforced to mechanically protect the assembly. The encapsulation is flexible in order to compensate for the pressure and the deformation of the cable insulation. This compensation is required in order to be submersible, according to IP68. The thermistor used in the string has a good stability over time. The temperature value can be obtained from a portable handheld readout instrument or a complete datalogger system.

1.2 SPECIFICATIONS

- Operating temperature range: -40°C to +85°C
- Submersible up to 200m deep (IP68)
- Can be buried underground
- Accuracy up to ± 0.05°C (depends on the choice of the thermistor)
- Up to 22 sensors per cable
- Temperature drift at 25°C: less than 0.01°C after 100 months
- Rugged assembly
- Maximum diameter of the string cable: 20mm

1.3 OPERATION PRINCIPLE

The heart of the TH-C is a miniature thermistor. Temperature changes affect the resistance of the device, following a law described later in the manual.

Note: The standard thermistor used in the TH-C sensor is a 3 kΩ thermistor.

2 READING PROCEDURE

Different readout procedures can be used to get the temperature from the sensor resistance.

2.1 MB-6T READOUT UNIT

The MB-6T(L) readout unit reads the thermistor integrated in the gage, then converts the resistance value into temperature and displays the temperature in °C and °F.

Connect the jumper cable into the sockets on the front panel of the MB-6T(L). Connect the alligator clips on the jumper cable to the TH-C cable according to the pinout in the drawing provided with the equipment. The pinout and the layout is subject to change depending on the number of thermistor

Connect the shield socket on the MB-6T(L) front to the cable shield using the single lead jumper cable.

The jumper cable should never be short-circuited when it is connected to the readout unit front panel.

Depending of the type of thermistor used in the gage, switch the thermistor selector on the MB-6T(L) to the correct position, using the following table. Otherwise, position the selector on D and record the resistance value. The latter is to be converted subsequently, using conversion tables or polynomial equation appropriate to the thermistor type.

Selector position	Function
A	2 kΩ thermistor
B	3 kΩ thermistor
C	10 kΩ thermistor
D	Ohmmeter mode

Table 2: Thermistor type or function vs. Selector position

For complete details about the MB-6T(L) readout, please refer to its instruction manual.

2.2 OHMMETER

An ohmmeter may also be used to monitor the TH-C gage. Zero the ohmmeter by connecting together its two connecting wires.

Measure the resistance between the thermistor wires (refer to the drawing provided with the equipment). Convert the reading in ohms to temperature using conversion tables or polynomial equation appropriate to the thermistor type.

2.3 SENSLOG DATA ACQUISITION SYSTEM

The TH-C can also be read using a SENSLOG data acquisition system. The latter reads a V_{out} output, then converts it in ohms according to the following relation:

$$R_T = R_{25} \cdot \left(\frac{A}{V_{out}} - B \right)$$

where R_T = resistance in ohms

R_{25} = resistance in ohms at 25°C depending of the type of thermistor used (2 000, 3 000 or 10 000 Ω)

A, B = conversion factors depending on the type of thermistor

V_{out} = voltage output in volts

	Thermistor type		
	2 kΩ	**3 kΩ**	**10 kΩ**
A	6.25	4.17	1.25
B	3.0	2.0	0.6

Table 3: Conversion factors vs. Thermistor types

Example:

With V_{out} = 1.00 V

R_{25} = 3 000 Ω (3 kΩ thermistor)

We get $R_T = 3000 \cdot \left(\frac{4.17}{1.00} - 2.0 \right) =$ 6 510 Ω

2.4 QUICK VERIFICATION OF MEASUREMENTS

On site, even before converting raw readings into engineering values, several checks can be done to prevent a bad measurement.

- Compare readings to previous ones. Are they in the same range? Are they changing slowly or abruptly? Consider external factors that can affect the measurements like construction activities, excavations or fills…

- In any case, it is advised to take several readings to confirm the measurement. Then, repeatability can be appreciated and dummy readings erased.

3 CONVERSION OF RESISTANCE READINGS

A temperature reading is obtained from a resistance reading using one of the following relations.

3.1 POLYNOMIAL APPROXIMATION

The following polynomial approximation can be use:

$$T = C_0 + C_1 X + C_2 X^2 + C_3 X^3 + C_4 X^4 \text{ with } X = \ln \frac{R_T}{R_{25}}$$

where T = temperature in degrees Celsius

R_T = resistance in ohms

R_{25} = resistance in ohms at 25°C depending of the type of thermistor used (2 000, 3 000 or 10 000 Ω)

C_0 = 25.032

C_1 = -22.756

C_2 = 1.4997

C_3 = -0.1196

C_4 = 0.0114

Example:

With R_T = 5 500 Ω

R_{25} = 3 000 Ω (3 kΩ thermistor)

We get X = 0.6061 and T = 11.8°C

3.2 ANOTHER RELATION

Please note that many formulae can be used to transform ohm readings in temperature readings. One of the most accurate one is:

$$T = \frac{1}{A + B \cdot \ln R_T + C \cdot \ln^3 R_T} - 273.15$$

where T = temperature in degrees Celsius

$\ln R_T$ = natural logarithm of the resistance in ohms

A, B, C = constant factors

A, B, C have been determined following empirical measurements. These factors will vary according to the type of thermistor (refer to table below).

The accuracy of this formula is ± 0.15 °C with a range of -50°C to +150°C.

	Thermistor type (from Dale Electronics)		
	2 kΩ	**3 kΩ**	**10 kΩ**
A	$1{,}49896.10^{-3}$	$1{,}4051.10^{-3}$	$1{,}1303.10^{-3}$
B	$2{,}3781.10^{-4}$	$2{,}369.10^{-4}$	$2{,}339.10^{-4}$
C	$1{,}0668.10^{-7}$	$1{,}019.10^{-7}$	$8{,}863.10^{-8}$

Table 4: Conversion factors

4 TROUBLESHOOTING

Periodically check cable connections and terminals. The transducers themselves are sealed and cannot be opened for inspection.

4.1 UNSTABLE READING

- Check if the same troubles occur with other gages. If so, compare cable routes or check the readout unit.

- Is the shield drain wire correctly connected to the readout unit?

- Check the battery of the readout unit.

- The sensor body may be shorted to the shield. Check the resistance between the shield drain and the sensor housing.

- Check the integrity of the cable.

4.2 NO READING

- Check the battery of the readout unit.

- Check if the same troubles occur with other instruments. If so, the readout unit may be suspected and the factory should be consulted.

- The sensor body may be shorted to the shield. Check the resistance between the shield drain and the sensor housing.

- Check the cable resistance. An estimation of its resistance can be calculated: the resistance of a 22 gage copper cable is approximately 0.07Ω/m. Having an idea of the temperature, convert it into ohms (using chart below for example) and add the cable resistance twice.

  - If the resistance is high or infinite, a cut cable must be suspected.
  - If the resistance is close to zero, a short must be suspected.

- Cuts or shorts are located, the cable may be spliced in accordance with recommended procedures.

5 MISCELLANEOUS

	To Convert From	To	Multiply By
LENGTH	Microns	Inches	3.94E-05
	Millimetres	Inches	0.0394
	Meters	Feet	3.2808
AREA	Square millimetres	Square inches	0.0016
	Square meters	Square feet	10.7643
VOLUME	Cubic centimetres	Cubic inches	0.06101
	Cubic meters	Cubic feet	35.3357
	Litres	U.S. gallon	0.26420
	Litres	Can–Br gallon	0.21997
MASS	Kilograms	Pounds	2.20459
	Kilograms	Short tons	0.00110
	Kilograms	Long tons	0.00098
FORCE	Newtons	Pounds-force	0.22482
	Newtons	Kilograms-force	0.10197
	Newtons	Kips	0.00023
PRESSURE AND STRESS	Kilopascals	Psi	0.14503
	Bars	Psi	14.4928
	Inches head of water*	Psi	0.03606
	Inches head of Hg	Psi	0.49116
	Pascal	Newton / square meter	1
	Kilopascals	Atmospheres	0.00987
	Kilopascals	Bars	0.01
	Kilopascals	Meters head of water*	0.10197
TEMPERATURE	Temp. in °F = (1.8 x Temp. in °C) + 32 Temp. in °C = (Temp. in °F – 32) / 1.8		

* at 4 °C

Table 5: Conversion factors E6TabConv-990505

APPENDIX 1

CONVERSION TABLE: THERMISTOR RESISTANCE vs. TEMPERATURE

Temp. °C	Reading in Ohms			Temp. °C	Reading in Ohms		
	With a 2K Thermistor	With a 3K Thermistor	With a 10K Thermistor		With a 2K Thermistor	With a 3K Thermistor	With a 10K Thermistor
-50		201100	670500	1	6208	9310	31030
-49		187300	670500	2	5900	8851	29500
-48		174500	624300	3	5612	8417	28060
-47		162700	581700	4	5336	8006	26690
-46		151700	542200	5	5080	7618	25400
-45		141600	440800	6	4836	7252	24170
-44		132200	472000	7	4604	6905	23020
-43		123500	411700	8	4384	6576	21920
-42		115400	384800	9	4176	6265	20880
-41		107900	359800	10	3980	5971	19900
-40	67320	101000	336500	11	3794	5692	18970
-39	63000	94480	315000	12	3618	5427	18090
-38	59000	88460	294900	13	3452	5177	17260
-37	55280	82870	276200	14	3292	4939	16470
-36	51800	77660	258900	15	3142	4714	15710
-35	48560	72810	242700	16	3000	4500	15000
-34	45560	68300	227700	17	2864	4297	14330
-33	42760	64090	213600	18	2736	4105	13680
-32	40120	60170	200600	19	2614	3922	13070
-31	37680	56510	188400	20	2498	3748	12500
-30	35400	53100	177000	21	2388	3583	11940
-29	33280	49910	166400	22	2284	3426	11420
-28	31300	46940	156500	23	2184	3277	10920
-27	29440	44160	147200	24	2090	3135	10450
-26	27700	41560	138500	25	2000	3000	10000
-25	26080	39130	130500	26	1915	2872	9574
-24	24580	36860	122900	27	1833	2750	9165
-23	23160	34730	115800	28	1756	2633	8779
-22	21820	32740	109100	29	1682	2523	8410
-21	20580	30870	102900	30	1612	2417	8060
-20	19424	29130	97110	31	1544	2317	7722
-19	18332	27490	91650	32	1481	2221	7402
-18	17308	25950	86500	33	1420	2130	7100
-17	16344	24510	81710	34	1362	2042	6807
-16	15444	23160	77220	35	1306	1959	6532
-15	14596	21890	72960	36	1254	1880	6270
-14	13800	20700	69010	37	1203	1805	6017
-13	13052	19580	65280	38	1155	1733	5777
-12	12352	18520	61770	39	1109	1664	5546
-11	11692	17530	58440	40	1065	1598	5329
-10	11068	16600	55330	41	1024	1535	5116
-9	10484	15720	52440	42	984	1475	4916
-8	9932	14900	49690	43	945	1418	4725
-7	9416	14120	47070	44	909	1363	4543
-6	8928	13390	44630	45	874	1310	4369
-5	8468	12700	42340	46	840	1260	4202
-4	8032	12050	40170	47	808	1212	4042
-3	7624	11440	38130	48	778	1167	3889
-2	7240	10860	36190	49	748	1123	3743
-1	6876	10310	34370	50	720	1081	3603
0	6532	9796	32660	51	694	1040	3469

Table 6: Conversion table (continued)

Temp. °C	Reading in Ohms			Temp. °C	Reading in Ohms		
	With a 2K Thermistor	With a 3K Thermistor	With a 10K Thermistor		With a 2K Thermistor	With a 3K Thermistor	With a 10K Thermistor
52	668	1002	3340	102	128	192.2	640.3
53	643	965.0	3217	103	125	186.8	622.1
54	620	929.6	3099	104	121	181.5	604.4
55	597	895.8	2986	105	118	176.4	587.5
56	576	863.3	2878	106	114	171.4	571.0
57	555	832.2	2774	107	111	166.7	555.1
58	535	802.3	2675	108	108	162.0	540.0
59	516	773.7	2580	109	105	157.6	524.9
60	498	746.3	2488	110	102	153.2	510.7
61	480	719.9	2400	111	99	149.0	496.4
62	463	694.7	2316	112	97	145.0	483.1
63	447	670.4	2235	113	94	141.1	469.8
64	432	647.1	2157	114	91	137.2	457.4
65	416	624.7	2083	115	89	133.6	444.9
66	402	603.3	2011	116	87	130.0	433.4
67	388	582.6	1942	117	84	126.5	421.8
68	375	562.8	1876	118	82	123.2	410.7
69	363	543.7	1813	119	80	119.9	399.6
70	350	525.4	1752	120	78	116.8	389.4
71	339	507.8	1693	121	76	113.8	379.2
72	327	490.9	1636	122	74	110.8	369.4
73	316	474.7	1582	123	72	107.9	360.1
74	306	459.0	1530	124	70	105.2	350.8
75	296	444.0	1479	125	68	102.5	341.9
76	286	429.5	1431	126	67	99.9	333.0
77	277	415.6	1385	127	65	97.3	324.6
78	268	402.2	1340	128	63	94.9	316.6
79	260	389.3	1297	129	62	92.5	308.6
80	251	376.9	1255	130	60	90.2	301.1
81	243	364.9	1215	131	59	87.9	293.5
82	236	353.4	1177	132	57	85.7	286.0
83	228	342.2	1140	133	56	83.6	279.3
84	221	331.5	1104	134	54	81.6	272.2
85	214	321.2	1070	135	53	79.6	265.5
86	208	311.3	1036	136	52	77.6	259.3
87	201	301.7	1004	137	51	75.8	253.1
88	195	292.4	973.8	138	49	73.9	246.9
89	189	283.5	944.1	139	48	72.2	241.1
90	183	274.9	915.2	140	47	70.4	235.3
91	178	266.6	887.7	141	46	68.8	229.6
92	172	258.6	861.0	142	45	67.1	224.2
93	167	250.9	835.3	143	44	65.5	218.9
94	162	243.4	810.4	144	43	64.0	214.0
95	157	236.2	786.4	145	42	62.5	208.7
96	153	229.3	763.3	146	41	61.1	203.8
97	148	222.6	741.1	147	40	59.6	199.4
98	144	216.1	719.4	148	39	58.3	194.5
99	140	209.8	698.5	149	38	56.8	190.1
100	136	203.8	678.5	150	37	55.6	185.9
101	132	197.9	659.0				

Table 6: Conversion table

CERTIFICATE OF QUALITY & CONFORMITY
THERMISTOR STRING

Model: **Thermistor string**

Serial number: **133E10001** **Total length: 12m**

Thermistor located at (m)	Color code	Pin code
10 (bottom)	Black & White-Black	15-16
8	Black & Blue/Black	13-14
6	Black & Orange-Black	11-12
4	Red & Gray-Red	9-10
2	Red & White-Red	7-8
1	Green & Red-Green	5-6
0,5	Red & Orange-Red	3-4
0 (ground level)	Blue & White-Blue	1-2

We certify that the following product(s) complies with specifications published in our technical documents and, when applicable, in the documents related to the customer order.

In order to ensure a high level of quality, our products are manufactured and tested according to our business process, which satisfy the requirements of ISO 9001 standards.

Certificate no: E7133E-100617-24271

Certified by: Melina Morales Date: 6/17/2010

CERTIFICATE OF QUALITY & CONFORMITY
THERMISTOR STRING

Model: **Thermistor string**

Serial number: **133E10002** **Total length: 12m**

Thermistor located at (m)	Color code	Pin code
10 (bottom)	Black & White-Black	15-16
8	Black & Blue/Black	13-14
6	Black & Orange-Black	11-12
4	Red & Gray-Red	9-10
2	Red & White-Red	7-8
1	Green & Red-Green	5-6
0,5	Red & Orange-Red	3-4
0 (ground level)	Blue & White-Blue	1-2

We certify that the following product(s) complies with specifications published in our technical documents and, when applicable, in the documents related to the customer order.

In order to ensure a high level of quality, our products are manufactured and tested according to our business process, which satisfy the requirements of ISO 9001 standards.

Certificate no: E7133E-100617-24271

Certified by: Melina Morales Date: 6/17/2010

CERTIFICATE OF QUALITY & CONFORMITY
THERMISTOR STRING

Model: **Thermistor string**

Serial number: **133E10003** **Total length: 12m**

Thermistor located at (m)	Color code	Pin code
10 (bottom)	Black & White-Black	15-16
8	Black & Blue/Black	13-14
6	Black & Orange-Black	11-12
4	Red & Gray-Red	9-10
2	Red & White-Red	7-8
1	Green & Red-Green	5-6
0,5	Red & Orange-Red	3-4
0 (ground level)	Blue & White-Blue	1-2

We certify that the following product(s) complies with specifications published in our technical documents and, when applicable, in the documents related to the customer order.

In order to ensure a high level of quality, our products are manufactured and tested according to our business process, which satisfy the requirements of ISO 9001 standards.

Certificate no: E7133E-100617-24271

Certified by: Melina Morales Date: 6/17/2010

CERTIFICATE OF QUALITY & CONFORMITY
THERMISTOR STRING

Model: **Thermistor string**

Serial number: **133E10004** **Total length: 12m**

Thermistor located at (m)	Color code	Pin code
10 (bottom)	Black & White-Black	15-16
8	Black & Blue/Black	13-14
6	Black & Orange-Black	11-12
4	Red & Gray-Red	9-10
2	Red & White-Red	7-8
1	Green & Red-Green	5-6
0,5	Red & Orange-Red	3-4
0 (ground level)	Blue & White-Blue	1-2

We certify that the following product(s) complies with specifications published in our technical documents and, when applicable, in the documents related to the customer order.

In order to ensure a high level of quality, our products are manufactured and tested according to our business process, which satisfy the requirements of ISO 9001 standards.

Certificate no: E7133E-100617-24271

Certified by: Melina Morales Date: 6/17/2010

CERTIFICATE OF QUALITY & CONFORMITY
THERMISTOR STRING

Model: **Thermistor string**

Serial number: **133E10005** **Total length: 12m**

Thermistor located at (m)	Color code	Pin code
10 (bottom)	Black & White-Black	15-16
8	Black & Blue/Black	13-14
6	Black & Orange-Black	11-12
4	Red & Gray-Red	9-10
2	Red & White-Red	7-8
1	Green & Red-Green	5-6
0,5	Red & Orange-Red	3-4
0 (ground level)	Blue & White-Blue	1-2

We certify that the following product(s) complies with specifications published in our technical documents and, when applicable, in the documents related to the customer order.

In order to ensure a high level of quality, our products are manufactured and tested according to our business process, which satisfy the requirements of ISO 9001 standards.

Certificate no: E7133E-100617-24271

Certified by: Melina Morales Date: 6/17/2010

CERTIFICATE OF QUALITY & CONFORMITY
THERMISTOR STRING

Model: **Thermistor string**

Serial number: **133E10006** **Total length: 29m**

Thermistor located at (m)	Color code	Pin code
27 (bottom)	Black & White-Black	1 - 2
26	Blue & White/Blue	3 - 4
25	Red & Orange-Red	5 - 6
24	Green & Red-Green	7 - 8
23	Black & Blue-Black	9 - 10
22	Orange & Orange-Black	11 - 12
21	Red & Gray-Red	13 - 14

We certify that the following product(s) complies with specifications published in our technical documents and, when applicable, in the documents related to the customer order.

In order to ensure a high level of quality, our products are manufactured and tested according to our business process, which satisfy the requirements of ISO 9001 standards.

Certificate no: E7133E-100617-24271

Certified by: Melina Morales Date: 6/17/2010

Quickstart for Installation Validation of the Thermistor String

1.0 Installation Validation Steps

- Installation of the loggernet software on the computer
- Connect the thermistor string to the test box (using the rectangular-shaped connector)
- Turn the power on with the terminal block blade
- Start the computer and the LoggerNet Software (setup the connection)
- Monitor data
- Collect data

2.0 LoggerNet Software

2.1 Description

The LoggerNet is a fullly featured Windows-based software package that allows direct communication with the test box using a RS-232 connection. A “Connect” screen provides real-time tools to set the datalogger clock in order to send the program to the datalogger and manually collect data using a computer. In addition, data can also be retrieved automatically, based on a predefined schedule. Measurements can be viewed in real-time on both numeric and graphical displays. In addition to these basic tools, the software package includes a datalogger program editor, a report generation tool and a data viewer with basic plotting capabilities.

This application note is intended to give the user a quickstart in getting the datalogger powered up and running. However, we strongly recommend that the user read the LoggerNet manual in order to get familiar with its features.

2.2 Software Installation

The LoggerNet is a collection of 32-bit programs designed for Intel-based computers running Microsoft Windows 2000, Windows XP or Vista.

As with all softwares, we strongly recommend that a back-up of critical files be performed before software installation. Place the installation disk in your computer’s CD/DVD drive. If autorun is enabled, LoggerNet installation will start. If it does not start, select START > RUN fom the Windows’s START menu. Locate the SETUP.EXE file on the CD/DVD drive and click OK. Follow the instructions on the screen. Refer to the LoggerNet manual for further details.

When the installation is done, a LoggerNet icon will be placed on your desktop.

3.0 Connection of the Thermistor String to the Test Box

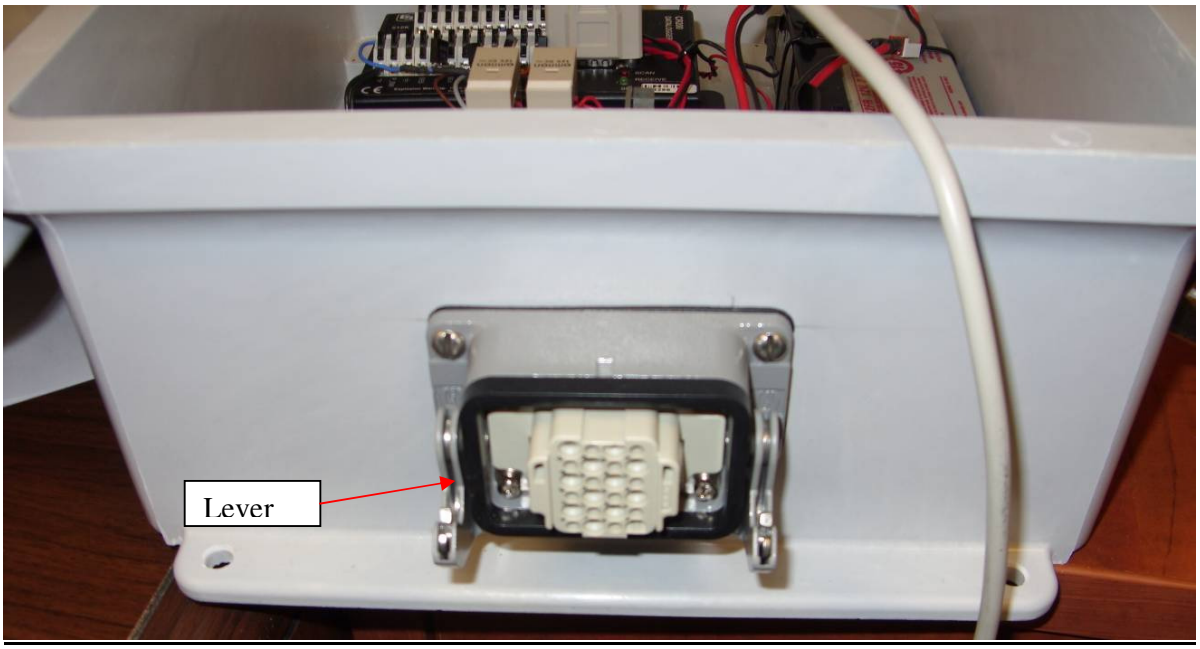

Connect the connector to the mating on the test box and lift up the lever to secure the connector in place. *NOTE: make sure to seal back the connector of the thermistor string to avoid any water infiltration in the connector before the final installation.*

4.0 Turn the Power On on the Test Box

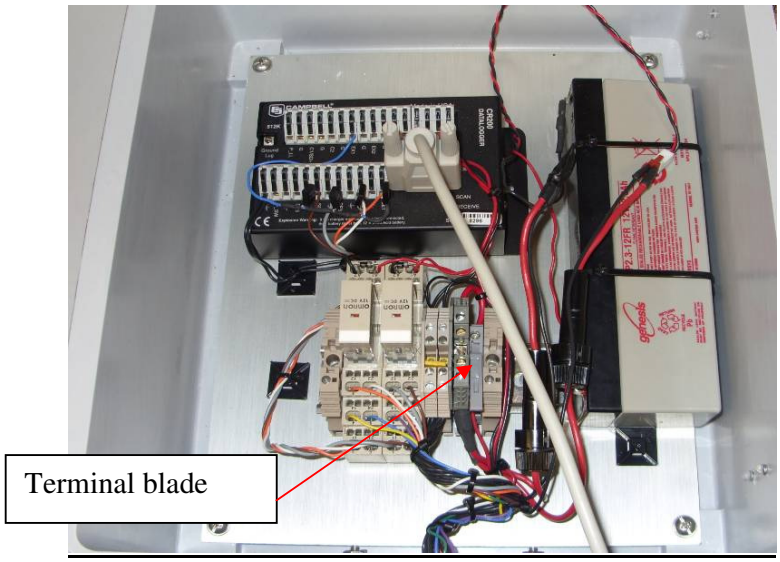

The terminal blade is used to turn the power OFF. Lower the blade to turn the unit ON. Make sure to raise the blade at the end of the test to avoid any battery drainage.

5.0 Setup the Connection

The hardware and software setups are done. The following steps describe the instructions to connect the datalogger, to collect or monitor data

To start the LoggerNet, double click on the LoggerNet desktop icon.

- From the **MAIN** / **SETUP**, click **Add** and then click **Next**, which will get you to the **Communication Setup** window.

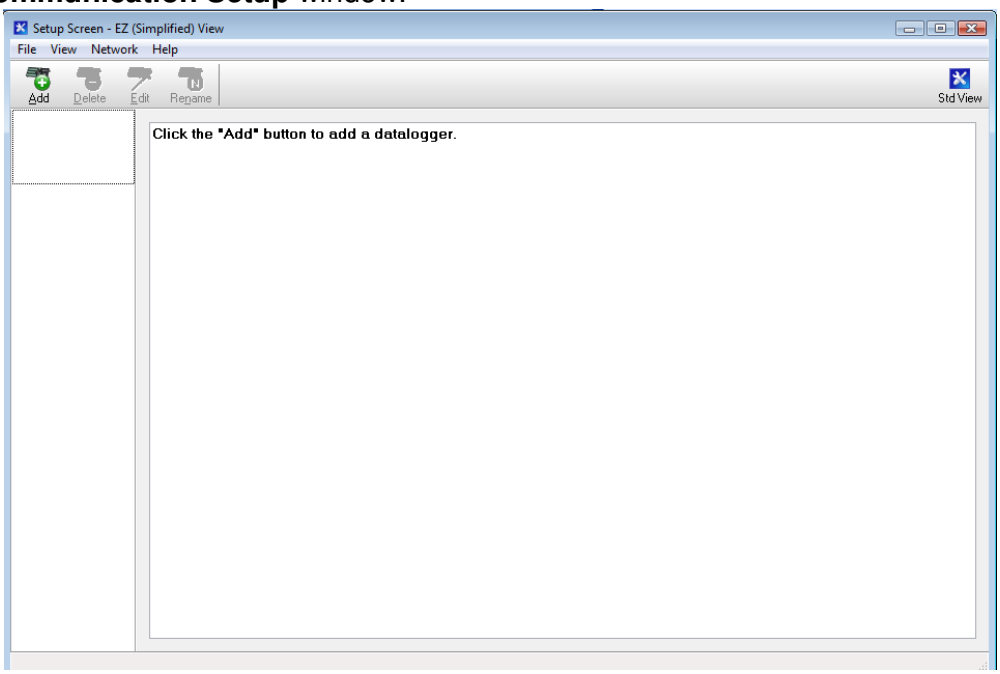

- Wait at least 15 seconds after powering up the unit before attempting to communicate with it.

- Under **Datalogger Type and Name**, select **CR200 Series,** and next under **Datalogger Name**, choose a name that best represents your application. For example, type ***Thermistor*** and click **Next**. This datalogger name will be used later to connect to the Thermistor datalogger.

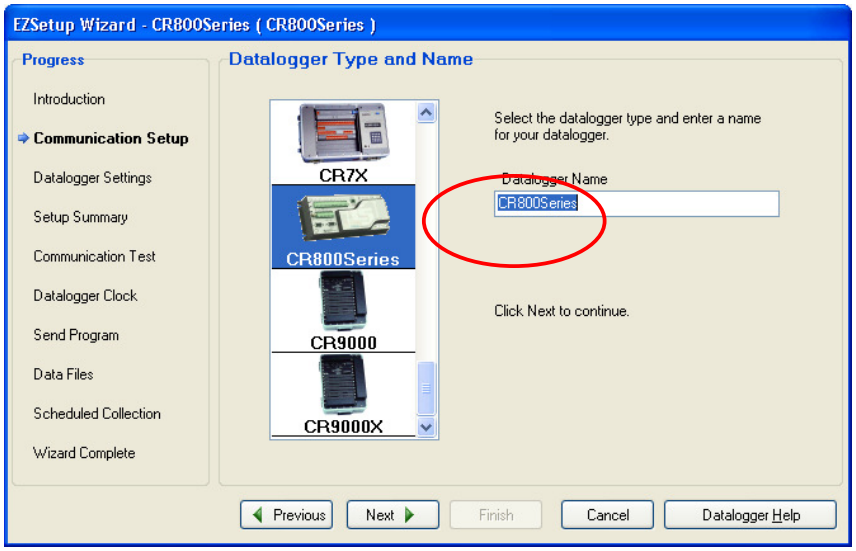

- Select **Direct Connect** and click **Next**.

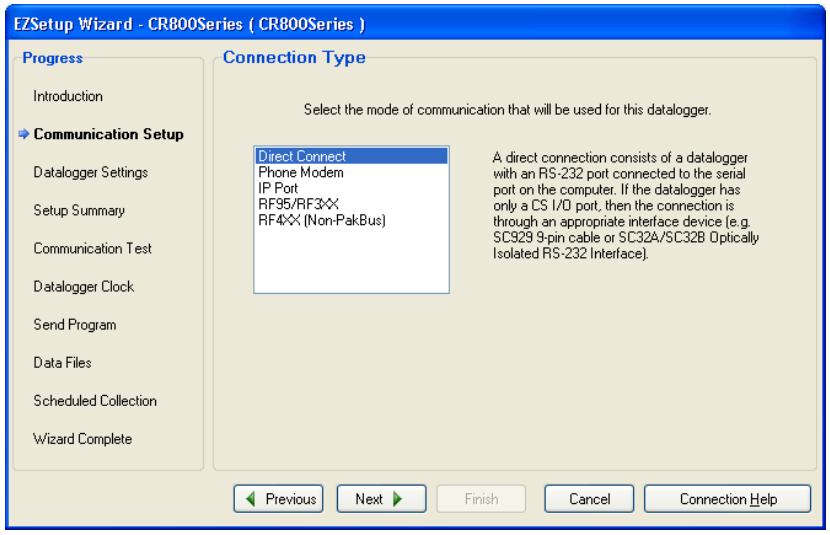

- Select the appropriate **COM port** on your computer. Usually, if you have a serial port on your computer, **COM 1** will be available. However, if you use a USB Serial adaptor, a virtual port will be created and a new COM port number will be assigned. Click **Next** when done.

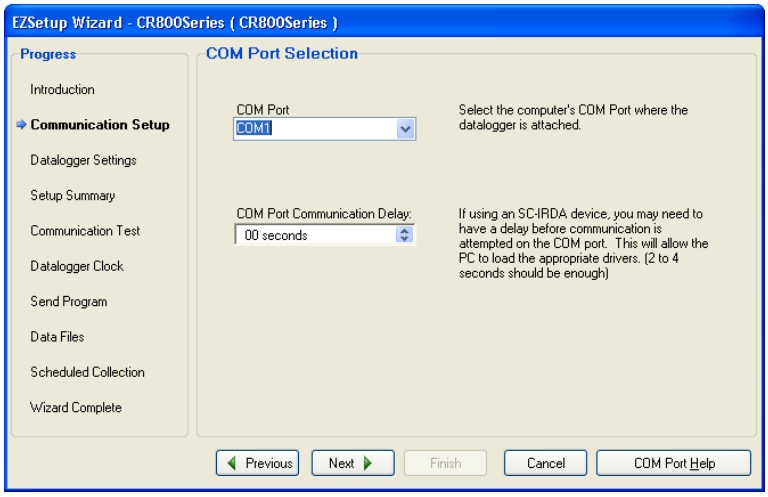

- Use the default parameters and click **Next**.

Note: If you use a USB Serial adapter you may need to lower the Baud Rate, in general **9600** works fine with the adapter.

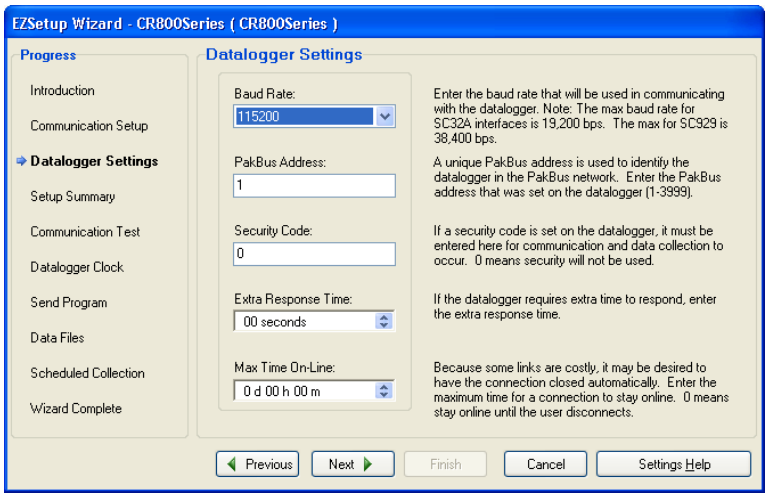

- The following window displays the Communication Setup Summary. Click **Next**.

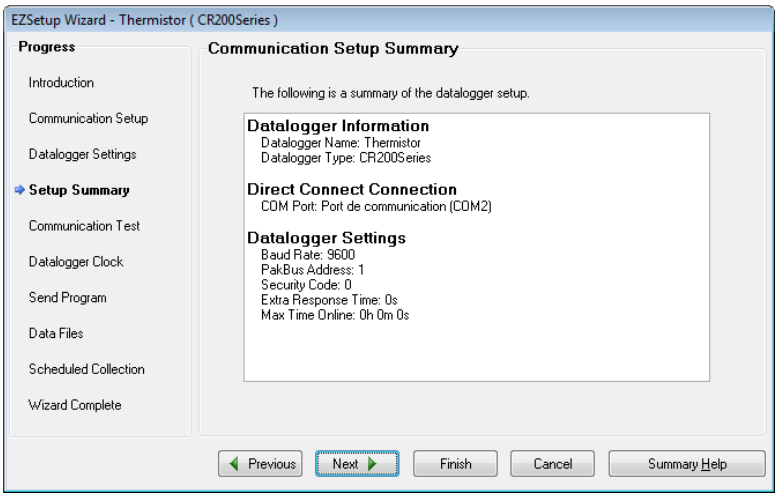

- To test the communication, select **Yes** and click **Next**.

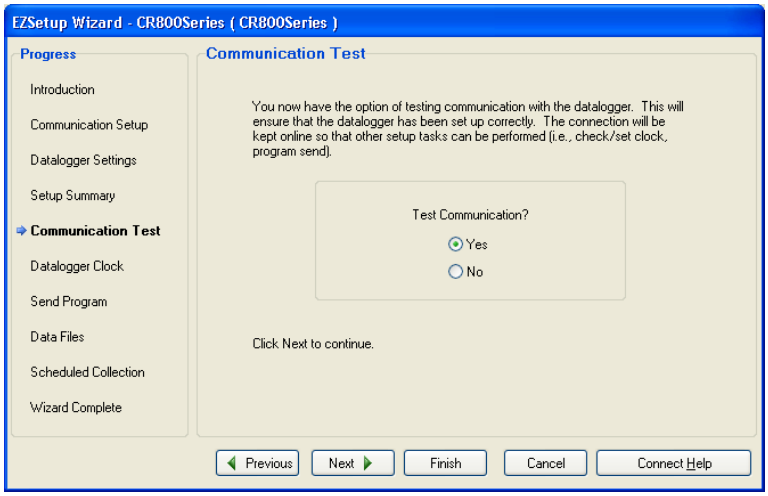

The following message will appear on the screen while your computer is attempting to communicate with the Thermistor datalogger.

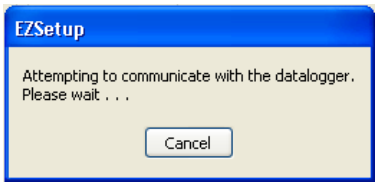

- The next windows will indicate if communication is successful. Click **Next**.

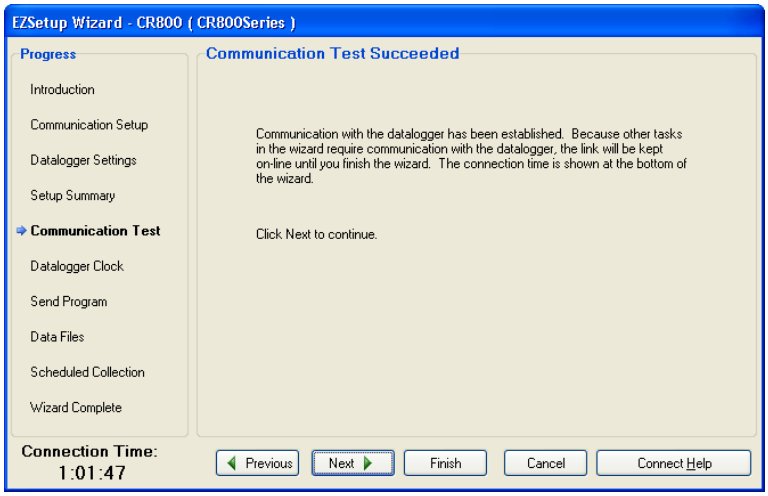

- Adjust the clock to set it at your local time zone. Make sure your computer is adjusted to your local time, then click **Set Datalogger Clock**. When done, click **Next**.

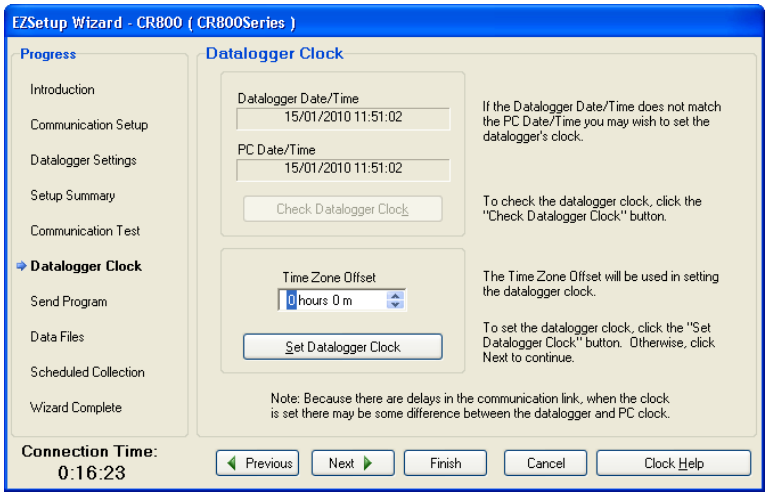

- The datalogger is usually shipped with the Application Program pre-loaded in the datalogger. The program will be displayed under **Current Program**. If it shows **no program** or if the program name shown is not for your application, you will need to upload your Application Program in the datalogger. Click **Finish** to save your settings. At this point, the datalogger setup is completed. To quit the **EZSetup** wizard, select **File** from the menu and click **Exit**. Proceed to section 4.2.

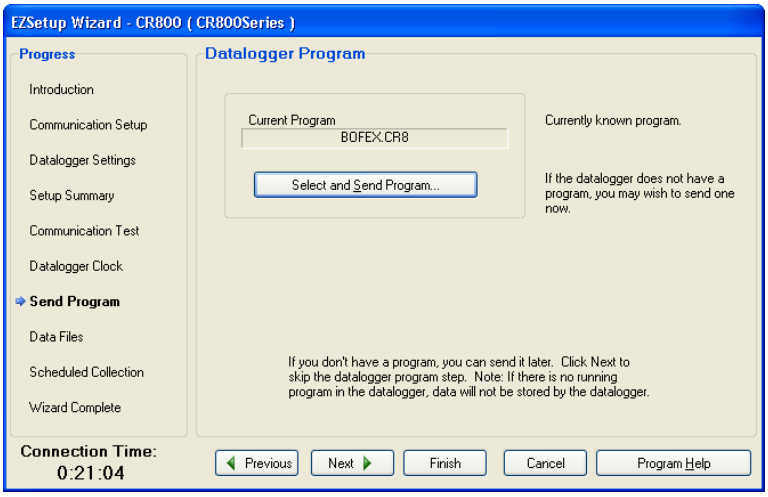

- To download your application program, click **Select and Send Program**. Locate the program on your computer's HD drive or on the one supplied by email, and click **Open**. The following warning message will be displayed on your screen. Click **Yes**.

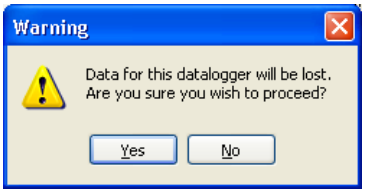

- A progress bar will display the download progress. If successful, a message will indicate it.

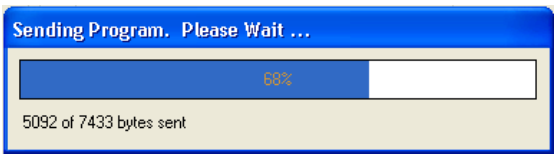

- Click **Finish** to save your settings. This completes the datalogger setup using the **EZSetup** wizard.

- To quit the **EZSetup**, select **File** from the **Menu**, and click **Exit.**

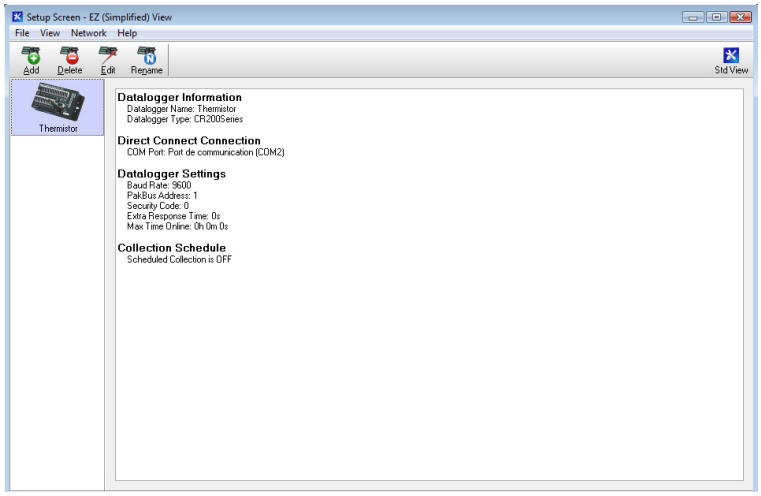

6.0 Monitoring Data With a Computer

- Connect the supplied Serial Cable between the RS232 Input on the CR200 datalogger and your computer's serial port or USB Serial Adapter.

- Start the LoggerNet by double clicking on the LoggerNet desktop icon.

- From the **MAIN/CONNECT**, click on the station **Thermistor**, then **Connect**

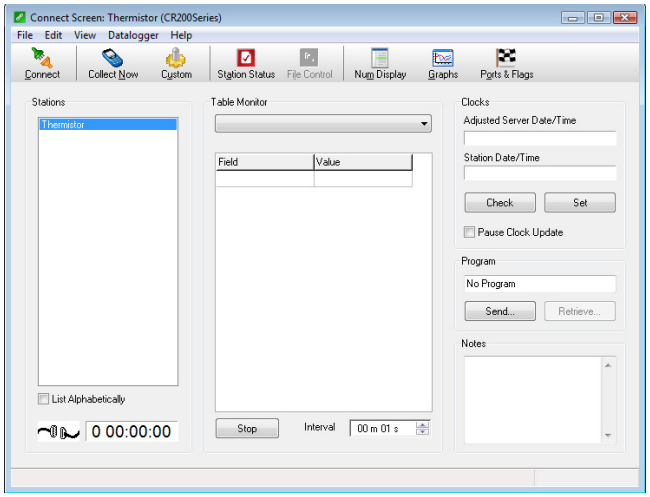

- The cable at the bottom of the screen will be connected when the link will be established. Click **Num.Display/Display 1**. The following window should appear.

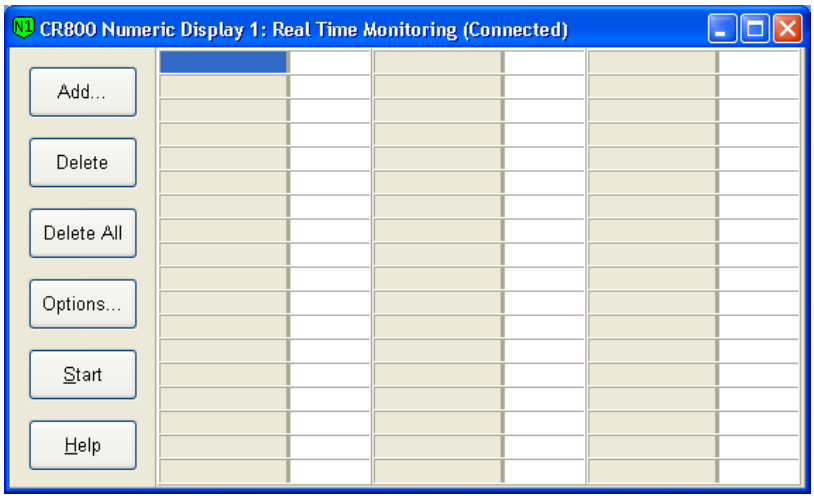

- Click the **Add** button and under **Tables**, highlight **Public**. The following window should appear.

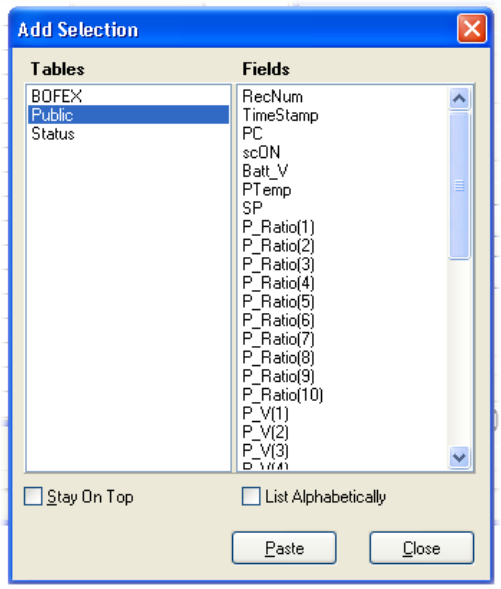

- Under **Fields**, select (highlight) the sensors (labels) you wish to view during the Test. You can use a combination of Shift & Ctrl keys on the computer's keyboard to select multiple labels. Next, on the **Display 1** window, highlight the location where you want to place the labels and finally, from the **Add Selection** window, click **Paste**. We recommend you to monitor the entire content in **Public**. The variable **Thermistor** represents the temperature and the value **Resistor** represents the resistor value of the thermistor.

7.0 Collect Data

When a Test is completed, readings should be collected immediately. The following steps assume that the computer is already connected and that the LoggerNet is already running.

- From the **Connect Screen**, click the **Collect Now** button.

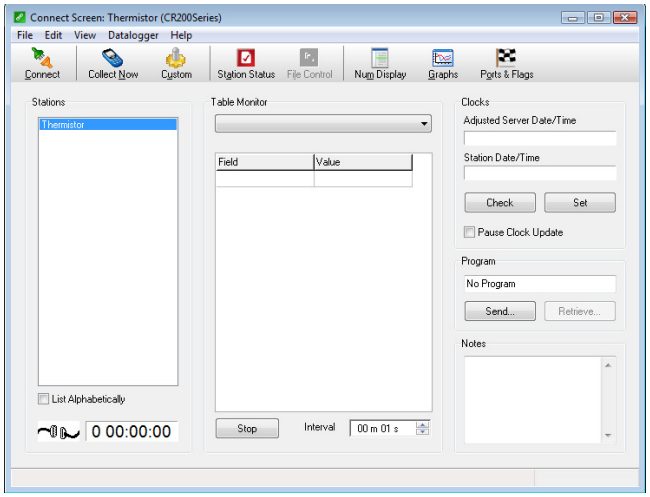

- Click on the Data_X.dat file to see the content. The records are displayed in a table.
- To modify the data output, click **Custom** in the connect screen. The following screen will appear.

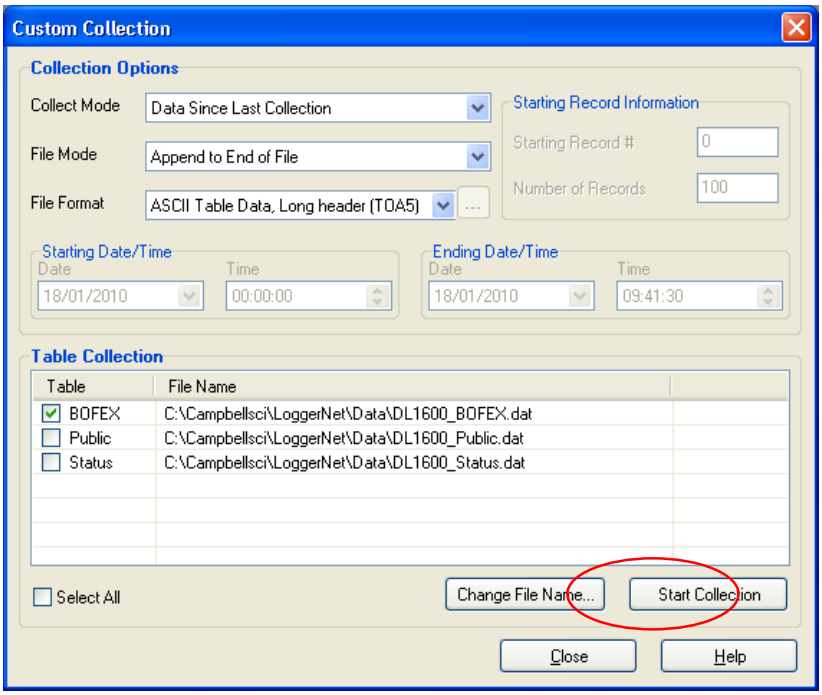

- Under **Collection Options**, make sure the following options are selected:

  - **Data Since Last Collection**
  - **Append to End of File**
  - **ASCII Table Data, Long header (TOA5)**

- Under **Table Collection**, make sure that **Data_X** is checked and that the file path where to save the file is defined. You do not need to check the **Public** and **Status** boxes.

When collecting readings for the first time, you may need to collect all the data from the test box. This will set all memory pointers so that the next time you collect readings, the datalogger will know what readings were previously collected, and only new readings will be collected. All new readings will be appended to the previously collected file, or a new file will be created.

- Click **Start Collection**. The following message will appear, showing the collection progress and total records collected.

Note: A single record includes the timestamp, the record number, all sensors readings in Celcius degrees, and finally, the datalogger's battery voltage.

If the message window shows zero records collected, set the **Collection Options** as follow and do the **Start Collection** again.

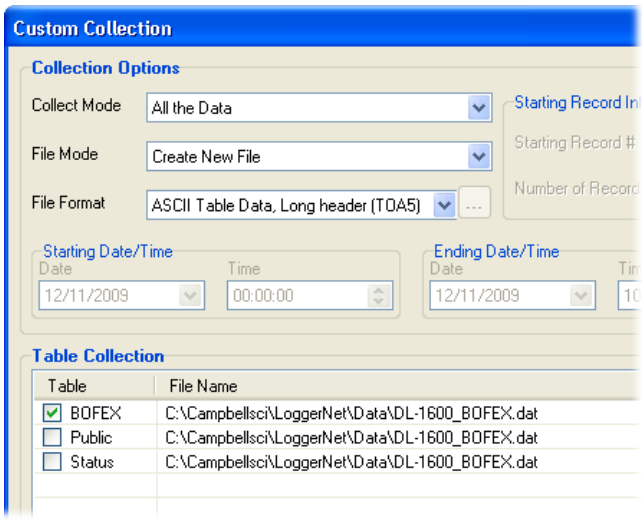

All collected readings are saved in the file specified under Table Collection. The readings saved with the file format **ASCII Table Data, Long header (TOA5)** are separated by commas (CSV) and can be imported into Microsoft Excel for data reduction.

7.1 Import Readings Into Excel

- Start Excel, go to **File** > **Open**, in the **Files of type** field, then select **All Files (*)**.
- Locate and select the file to import and click **Open**. The Text Import Wizard will open.

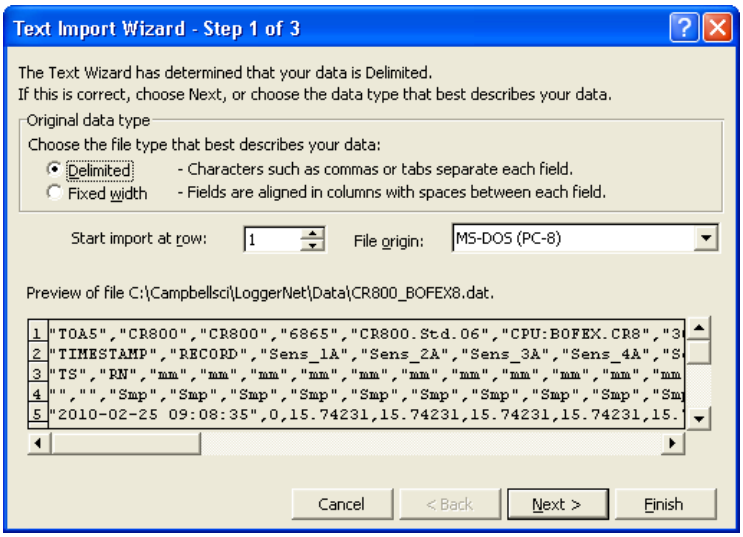

- Select **Delimited** and click **Next**.

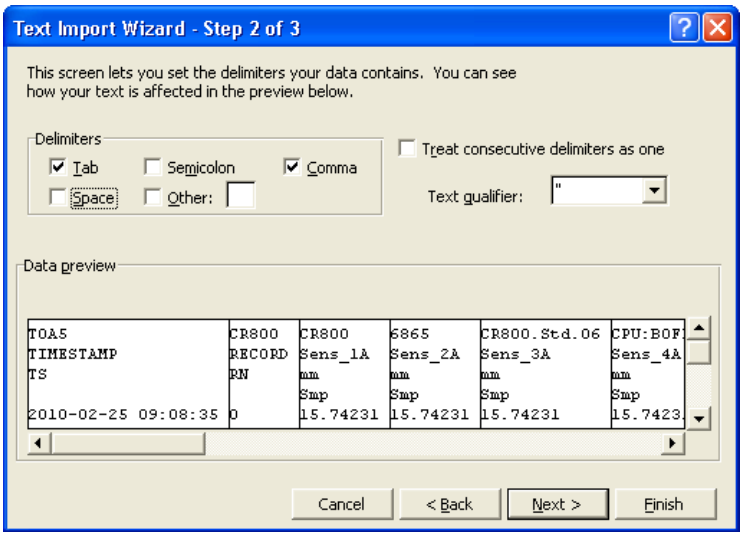

- Select **Tab**, **Comma** and click **Finish**.

	A	B	C	D	E	F	G	H	I	J	K	L	M	N
1	TOA5	CR800	CR800	6865	CR800.Stc	CPU:BOFE	3022	BOFEX						
2	TIMESTAMP	RECORD	Sens_1A	Sens_2A	Sens_3A	Sens_4A	Sens_5A	Sens_1B	Sens_2B	Sens_3B	Sens_4B	Sens_5B	S_Range	Load
3	TS	RN	mm	mm	mm	mm	mm	mm	mm	mm	mm	mm	mm	
4			Smp	Smp	Smp	Smp	Smp	Smp	Smp	Smp	Smp	Smp	Smp	Smp
5	25/09/2009 09:08	0	15.74231	15.74231	15.74231	15.74231	15.74231	15.74231	15.74231	15.74231	15.74231	15.74231	50	0
6	25/09/2009 09:08	1	15.74231	15.74231	15.74231	15.74231	15.74231	15.74231	15.74231	15.74231	15.74231	15.74231	50	0
7	25/09/2009 09:08	2	15.74231	15.74231	15.74231	15.74231	15.74231	15.74231	15.74231	15.74231	15.74231	15.74231	50	0
8	25/09/2009 09:08	3	15.74231	15.74231	15.74231	15.74231	15.74231	15.74231	15.74231	15.74231	15.74231	15.74231	50	0
9	25/09/2009 09:08	4	15.74231	15.74231	15.74231	15.74231	15.74231	15.74231	15.74231	15.74231	15.74231	15.74231	50	0
10														

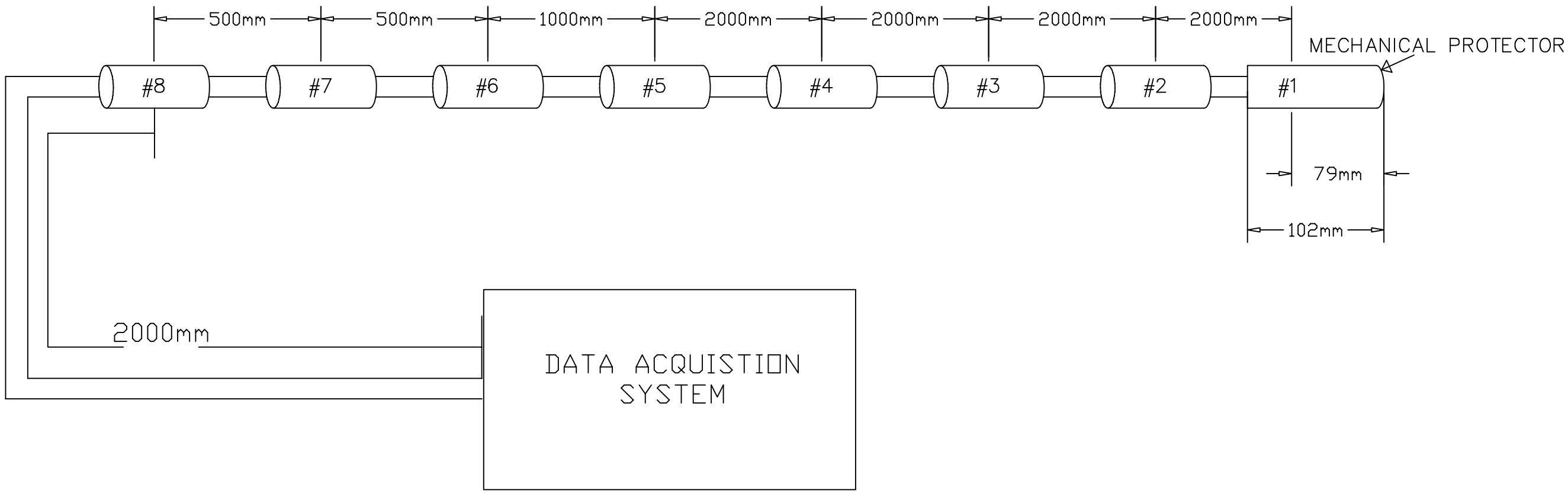

Position / wire color	Connector pin
10 m color: black - white/black	15-16
8 m color: black - blue/black	13-14
6 m color: black - orange/black	11-12
4 m color: red - gray/red	9-10
2 m color: red - white/red	7-8
1 m color: green - red/green	5-6
0.5m color: red - orange/red	3-4
0 m color: blue - white/blue	1-2

ROCTEST

REVISION			
NO.	DESCRIPTION	DATE	APPR.

DRAW	D.LABRE	10-06-18
CHECK	D.LABRE	10-06-18
DESIGNED	D.LABRE	10-06-18
APPROVED	D.LABRE	10-06-18

APPLICATION: THERMISTOR STRING 12 meters

TITLE: WIRING SCHEMATIC TO DAS

PAGE 1 OF 1	CODE NO.	DRAWING NO.	REV. NO.
SCALE N/A	137	60499_1	0

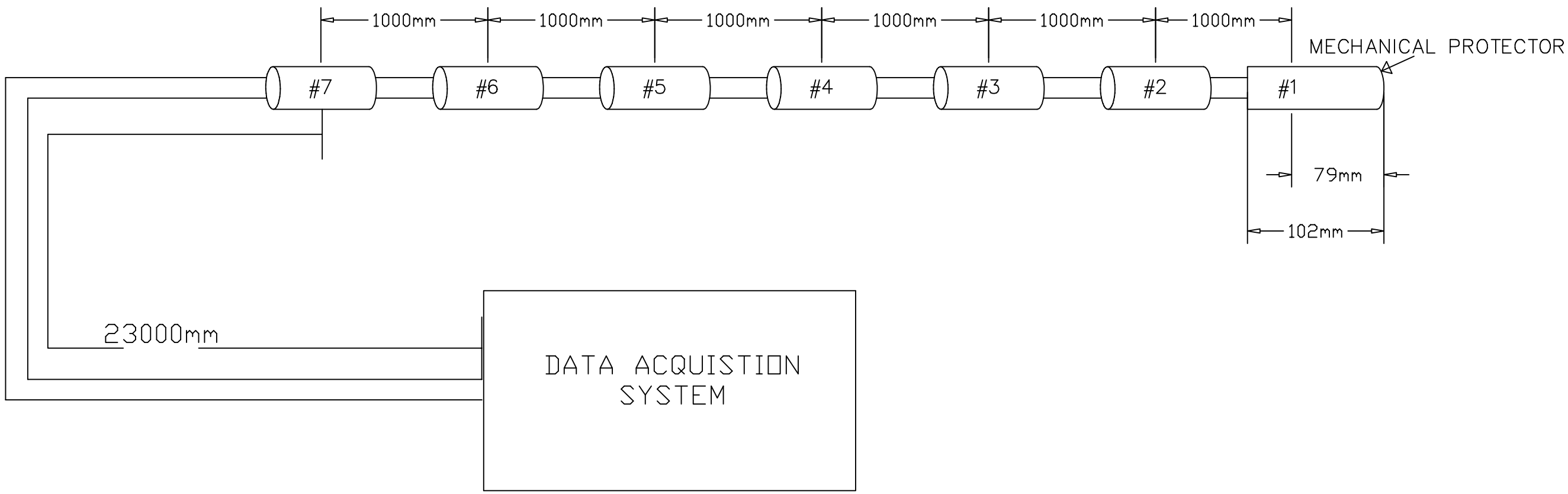

Position / wire color	Connector pin
27 m color: black - white/black	1-2
26 m color: blue - white/blue	3-4
25 m color: red - orange/red	5-6
24 m color: green - red/green	7-8
23 m color: black - blue/black	9-10
22 m color: black - orange/black	11-12
21 m color: red - gray/red	13-14

REVISION			
NO.	DESCRIPTION	DATE	APPR.

ROCTEST

DRAW	D.LABRE	10-06-18
CHECK	D.LABRE	10-06-18
DESIGNED	D.LABRE	10-06-18
APPROVED	D.LABRE	10-06-18

APPLICATION: THERMISTOR STRING 29 meters

TITLE: WIRING SCHEMATIC TO DAS

PAGE 1 OF 1	CODE NO.	DRAWING NO.	REV. NO.
SCALE N/A	137	60499_2	0

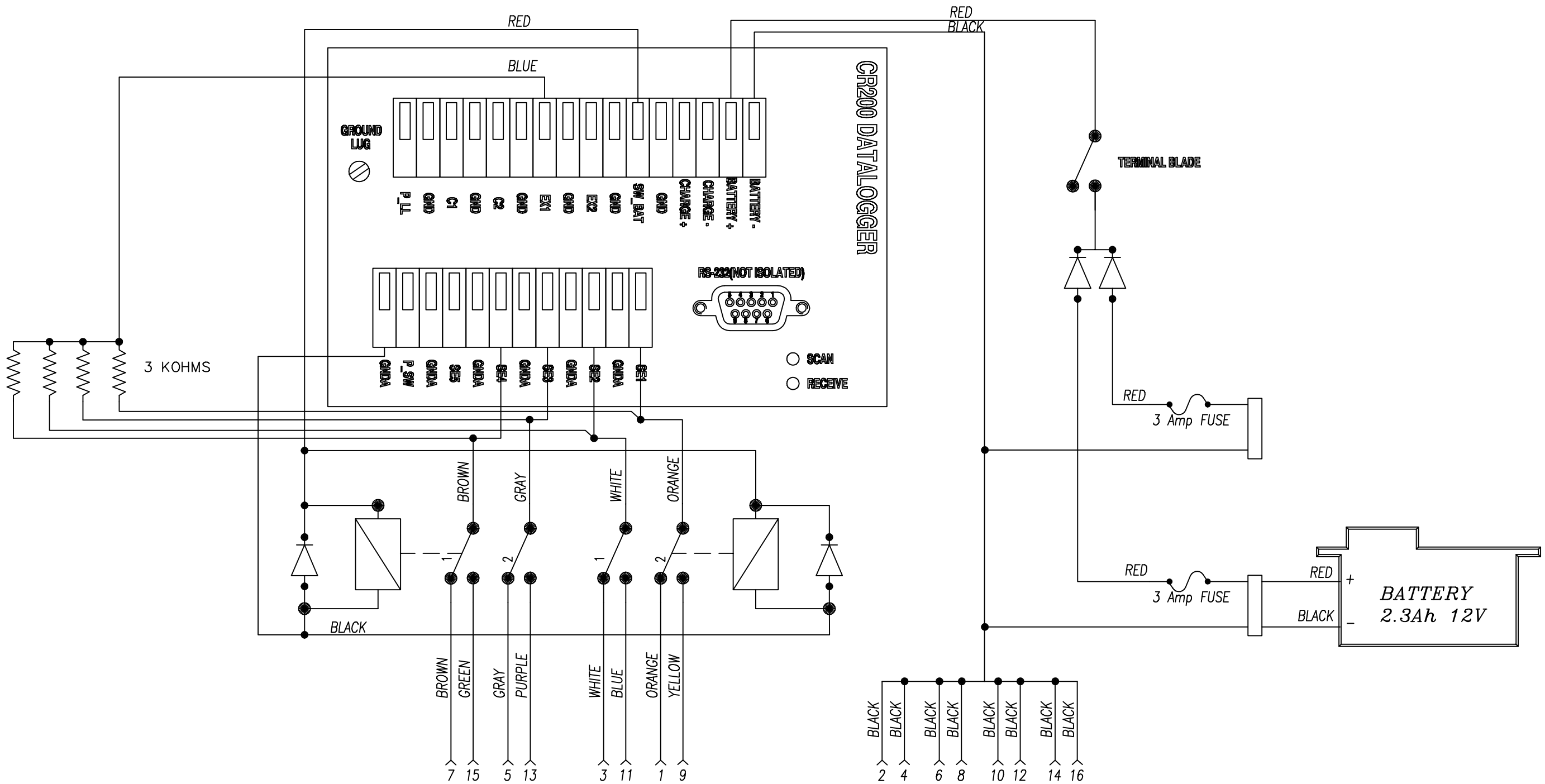

ROCTEST

APPLICATION: DATA ACQUISITION SYSTEM

TITLE: WIRING SCHEMATIC

REVISION						
NO.	DESCRIPTION	DATE	APPR.			
				DRAW	D.LABRE	10-06-18
				CHECK	D.LABRE	10-06-18
				DESIGNED	D.LABRE	10-06-18
				APPROVED	D.LABRE	10-06-18

PAGE 1 OF 1	CODE NO.	DRAWING NO.	REV. NO.
SCALE N/A	137	60499_3	0

Technical Specifications Facility Sign

Draft

14 X

4 TROUS

ᑯᑉᐱᖅᓴᕐᐱᒃ

ᑲᑎᖕᒐᕈᓗᔭᕐᐱᐅᔭᕆᐊᕐᑲᖕᒋᑐᖅ

ᐅᑉᓗᓂᑦ

ᐊᖕᒍᓇᓱᐱᐅᔭᕆᐊᕐᑲᖕᒋᑐᖅ

SEWAGE TREATMENT FACILITY

NO GATHERING OR HARVESTING

PANNEAU 60 X 45 CM X 3,2 MM

TEXTE ET BORDURE NOIRS

SUR FOND BLANC G.I.

Technical Specifications Wells

Draft

www.aquamerik.com

Well Caps

Locking well

ITEM	Ø	WEIGHT
412LKWC	4-1/2"	1.7 lb (0.8 kg)
658LKWC	6-5/8"	2.1 lb (1 kg)
834LKWC	8-3/4"	2.7 lb (1.2 kg)
1034LKWC	10-3/4"	5.4 lb (2.5 kg)
1234LKWC	12-3/4"	6.5 lb (2.9 kg)

ACCESSORIES

HDPE-4	DR-21 HDPE pipe, size 4-1/2"
HDPE-6	DR-21 HDPE pipe, size 6-5/8"
834-102	40mm padlock #834

caps

Locking conduit well caps

ITEM	DIAM.	CONDUIT
6LKCC1	6"	1"
834LKCC1	8¾"	1"
10LKCC1	10"	1"

Locking watertight conduit well

ITEM	DIAM.	CONDUIT
558CC1	5-5/8"	1"
658CC1	6-5/8"	1"
834CC1	8-3/4"	1"

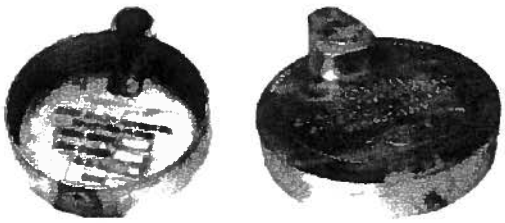

caps

Watertight well caps

www.aquamerik.com

Tread flush joint

MALE CAPS

ITEM	DIAMETER	TYPE
CMS-007	¾"	Insert
CMS-010	1"	Insert
CMS-015	1½"	Insert
CMS-020	2"	Insert
CMS-030	3"	Insert
CMS-040	4"	Insert
CMS-050	5"	Insert
CMS-060	6"	Insert
CMS-080	8"	Insert

FEM CAPS

ITEM	DIAMETER	TYPE
CF447005	½"	Insert
CF447007	¾"	Insert
CF447010	1"	Insert
CF447015	1½"	Insert
→ CF447020	2"	Insert
CF447030	3"	Insert
CF447040	4"	Insert
CF447060	6"	Insert
CF447080	8"	Insert

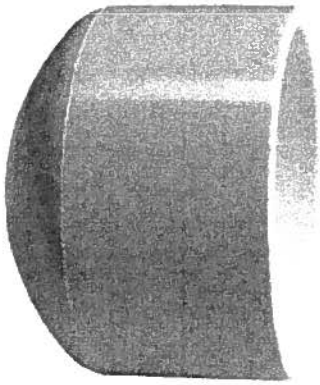

INSERTION POINT

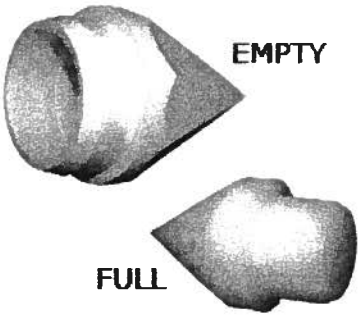

ITEM	DIAMETER	TYPE
PIP-007	¾"	Full
PI-010	1"	Empty
PIP-010	1"	Full
PI-015	1½"	Empty
PIP-015	1½"	Full
PI-020	2"	Empty
PIP-020	2"	Full

TFJ CAPS

ITEM	DIAMETER	TYPE
CTFJ-007M	¾"	TFJ male
CTFJ-007F	¾"	TFJ female
CTFJ-010M	1"	TFJ male
CTFJ-010F	1"	TFJ female
CTFJ-015M	1½"	TFJ male
CTFJ-015F	1½"	TFJ female
CTFJ-020M	2"	TFJ male
CTFJ-020F	2"	TFJ female

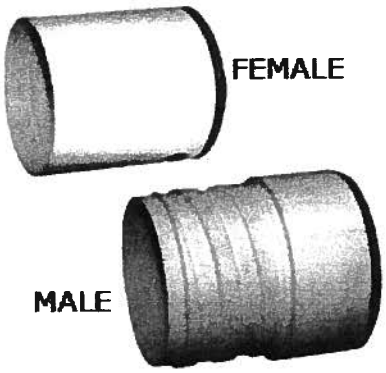

TFJ POINT

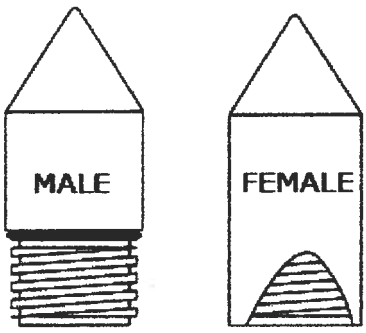

ITEM	DIAMETER	TYPE
PTFJ-007M	¾"	TFJ male
PTFJ-007F	¾"	TFJ female
PTFJ-010M	1"	TFJ male
PTFJ-010F	1"	TFJ female
PTFJ-015M	1½"	TFJ male
PTFJ-015F	1½"	TFJ female
PTFJ-020M	2"	TFJ male
PTFJ-020F	2"	TFJ female

TFJ ACCESS.

ITEM	DIAMETER	TYPE
MLTFJ-020	2"	TFJ male
MLTFJ-040	4"	TFJ male
MLTFJ-060	6"	TFJ male
NPTTFJ-007	¾"	NPT / TFJ
NPTTFJ-010	1"	NPT / TFJ
NPTTFJ-015	1½"	NPT / TFJ
NPTTFJ-020	2"	NPT / TFJ
NPTTFJ-040	4"	NPT / TFJ

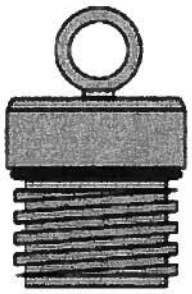
NPTFJ

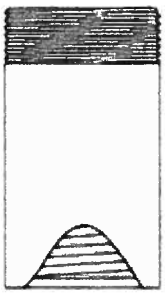
MLTFJ

ITEM	DESCRIPTION
CMS-007	Insertion male caps 3/4".
CMS-010	Insertion male caps 1".
CMS-015	Insertion male caps 1-1/2".
CMS-020	Insertion male caps 2".

www.aquamerik.com

Intake Screens

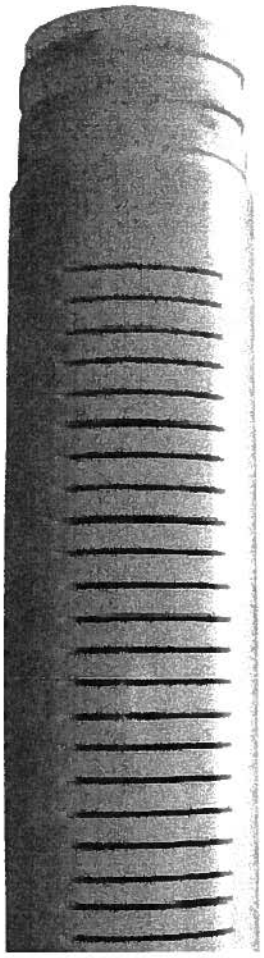

Aquamerik Threaded Flush Joint is manufactured on "CNC" computer controlled machines.

Close machining tolerances are maintained to ensure an exact fit every time. A taper and relief area is designed into every end to allow the joints to be positioned and started easily without cross threading.

Flush Joints eliminate the need for couplings allowing the pipe to be assembled without the use of solvents. Flush Joints also help to prevent bridging of the backfill materials and can be installed in small diameter openings.

Hybrid wells can be constructed using PVC, Stainless Steel and other materials.

Construction: PVC (standard), CPVC, HDPE, PP
Pipe length: more than 20 feet (10 feet standard)
Pipe diameter: 1/2" to 24".
Construction: Sch40 (standard) -Sch80 - SDR
Slot Sizes: 0.006" & + (0.010" standard)
Slot Spacing: 0.100" & + (0.250" standard)

*Consult factory for pipe sizes available.

Please consult us for your specific requirements. Some materials may not be available in all sizes.

DISCOUNT AVAILABLE ON QUANTITY, DON'T HESITATE TO CALL

TOOL FREE: (888) 278-4776

ITEM	DESCRIPTION
WS075-5-10	3/4" x 5' x 0.01" screen TFJ PVC sch 40
WS075-10-10	3/4" x 10' x 0.01" screen TFJ PVC sch 40
WS100-5-10	1" x 5' x 0.01" screen TFJ PVC sch 40
WS100-10-10	1" x 10' x 0.01" screen TFJ PVC sch 40
WS100-10-20	1" x 10' x 0.02" screen TFJ PVC sch 40
WS100-10-40	1" x 10' x 0.04" screen TFJ PVC sch 40
WS150-5-10	1½" x 5' x 0.01" screen TFJ PVC sch 40
WS150-10-10	1½" x 10' x 0.01" screen TFJ PVC sch 40
WS150-10-20	1½" x 10' x 0.02" screen TFJ PVC sch 40

WS150-10-40	1½" x 10' x 0.04" screen TFJ PVC sch 40
WS200-5-10	2" x 5' x 0.01" screen TFJ PVC sch 40
WS200-10-10	2" x 10' x 0.01" screen TFJ PVC sch 40
WS200-10-20	2" x 10' x 0.02" screen TFJ PVC sch 40
WS200-10-40	2" x 10' x 0.04" screen TFJ PVC sch 40
WS200-10-80	2" x 10' x 0.08" screen TFJ PVC sch 40
WS300-5-10	3" x 5' x 0.01" screen TFJ PVC sch 40
WS300-10-10	3" x 10' x 0.01" screen TFJ PVC sch 40
WS300-10-20	3" x 10' x 0.01" screen TFJ PVC sch 40
WS300-10-40	3" x 10' x 0.01" screen TFJ PVC sch 40
WS400-5-10	4" x 5' x 0.01" screen TFJ PVC sch 40
WS400-10-10	4" x 10' x 0.01" screen TFJ PVC sch 40
WS400-10-20	4" x 10' x 0.02" screen TFJ PVC sch 40
WS400-10-40	4" x 10' x 0.04" screen TFJ PVC sch 40
WS600-5-10	6" x 5' x 0.01" screen TFJ PVC sch 40
WS600-10-10	6" x 10' x 0.01" screen TFJ PVC sch 40
WS600-10-20	6" x 10' x 0.02" screen TFJ PVC sch 40
WS600-10-40	6" x 10' x 0.04" screen TFJ PVC sch 40
WS800-10-10	8" x 10' x 0.01" screen TFJ PVC sch 40
WS800-10-20	8" x 10' x 0.02" screen TFJ PVC sch 40
WS800-10-40	8" x 10' x 0.04" screen TFJ PVC sch 40
WS075-5	Screen PVC 3/4" diam. x 5'
WS075-10	Screen PVC 3/4" diam. x 10'
WS100-5	Screen PVC 1" diam. x 5'
WS100-10	Screen PVC 1" diam. x 10'
WS150-5	Screen PVC 1 1/2" diam. x 5'
WS150-10	Screen PVC 1 1/2" diam. x 10'
WS200-5	Screen PVC 2" diam. x 5'
WS200-10	Screen PVC 2" diam. x 10'
WS300-5	Screen PVC 3" diam. x 5'
WS300-10	Screen PVC 3" diam. x 10'
WS400-5	Screen PVC 4" diam. x 5'
WS400-10	Screen PVC 4" diam. x 10'
WS600-5	Screen PVC 6" diam. x 5'
WS600-10	Screen PVC 6" diam. x 10'
WS800-5	Screen PVC 8" diam. x 5'
WS800-10	Screen PVC 8" diam. x 10'

Last Update: January 20, 2010

www.aquamerik.com

Bentonite

ITEM	DESCRIPTION
MEDIUM	Holeplug 3/8", bag of 50 lb.
COARSE	Holeplug 3/4", bag of 50 lbs.
B313	Quik-gel 200 mesh, bag of 50 lbs.
B304	Benseal #8, bag of 50 lbs.
GRA-38	Granular bentonite, 3/8", bucket of 50 lbs.

Last Update: January 29, 2010

TABLEAU DE RÉFÉRENCE

PRODUIT	DESCRIPTION	SURFACTANT	RÉDUCTEUR DE FILTRANT	VISCOSITÉ / ÉPAISSISSANT	FORAGE AIR / MOUSSE	CIMENTATION ET COLMATAGE	COLMATAGE DE BASSIN	STABILISATION DES SOLS	HOMOLOGUÉ NSF	PUITS D'EAU	TROUS DE TIRS SISMIQUES	EXPLORATION MINÉRALE	FORAGE HORIZONTAL	PUITS FORÉS ET FOND	PUITS DE CONTRÔLE	PUITS DE REMÉDIATION	EAU DOUCE	EAU SAUMÂTRE	EAU SALÉE
Agent de scellement et de colmatage																			
Pellets 1/4" ®	Granule de bentonite sodique					■				■		■	■		■	■		■	
Pellets 3/8" ®	Granule de bentonite sodique					■				■		■	■		■	■		■	
Pellets 1/2" ®	Granule de bentonite sodique					■				■		■	■		■	■		■	
Coarse	Ben. sodique calibrée -3/4" + 3/8"					■			■	■	■	■	▒		■	▒	■	▒	
Holeplug ®	Ben. sodique calibrée -3/8" + 1/4"					■			■	■	■	■	▒		■	▒	■	▒	
Casina Seal ®	Mélange ben. sodique (cal. 8 à 14)					■	■	■		■		■	■		■	■	■	▒	
Agent de cimentation souterraine																			
Aquaguard ®	Ciment de bentonite sodique (cal.30)					■			■	■		■	■		■	▒	■		
Produit gélifiant; améliorant la viscosité (ht rend.)																			
Quick Gel ®	Bentonite sodique traitée, haut rend.		■	■					■	■	■	■	■	■	■		■		
Produit gélifiant; améliorant la viscosité																			
Aqua Gel ®	Montmorillonite sod. traitée (cal. 200)		■	■			■		■	▒	▒	▒	■	■	▒		■		
Agent moussant																			
Drill Foam ®	Agent moussant biodégradable				■					■	■	■	▒				■		
Agent stabilisateur; améliorant la viscosité																			
E-Z Mud ®	Émulsion de polymères liquide PHPA		▒	■	■				■	■	■	■	■	■		■	■	■	▒
Agent de mouillage																			
Con Det ®	Surfactant soluble dans l'eau	■			▒					■	■	■	■	■		■	■	■	■
Fluide de forage horizontal																			
Boregel ®	Fluide de forage		■	■					■	■	■	■	■			▒	■		

■ Fonction principale ▒ Fonction secondaire

AUSSI DISPONIBLE:

- ENVIROPLUG GRANULE
- ENVIROPLUG GROUT
- DÉTERGENT
- THERM-EX GROUT
- PERCOL 728
- PRO-YIELD
- ZETAG 7692
- TRUBORE
- WYOMING GEL
- PRO-FARM
- PRO-PAC
- POLY-PRO
- HYDROGEL
- SODA-ASH

TABLEAU DU TAUX D'APPLICATION DES PRODUITS ENVIROPLUG

	Aquaguard		Holeplug		Coarse	
Diamètre du trou	Gal. / pied de trou	Pied de trou / sac	LB / pied de trou	Pied de trou / sac	LB / pied de trou	Pied de trou / sac
2.50"	0.25	68.00	2.50	20.00	NR	NR
3.50"	0.50	34.00	5.50	10.00	4.25	11.75
4.00"	0.65	26.00	6.50	7.50	5.50	9.00
4.50"	0.83	20.50	8.50	5.75	7.00	7.00
5.00"	1.00	17.00	10.75	5.00	8.75	5.75
5.50"	1.23	13.80	12.50	4.00	10.50	5.50
6.00"	1.50	11.30	15.50	3.25	12.50	4.00
6.50"	1.70	10.00	20.50	2.50	14.75	3.50
8.00"	2.60	6.50	28.00	1.75	22.50	2.25
8.50"	2.90	5.90	32.00	1.50	25.25	2.00
10.00"	4.10	4.10	41.00	1.25	34.75	1.50
12.00"	5.90	2.90	80.00	0.75	50.00	1.00
16.00"	10.40	1.60	94.00	0.50	89.00	0.50

www.aquamerik.com

Filtration sands and gravels

The Aquamerik filtration Sand is composed of silica whole grains crystalline of a great hardness.

They are durable and dense, which enables them to be resistant to degradation.

Each grade is washed, dried and classified according to the most strict quality control. This sand is adequate for the use in the filters with pressure and density. it is also used in the filters of swimming pool like in various industrial processes and auxiliary applications.

Moreover, our sands meet AWWA B-100, ANSI and NSF-61 standards. Shipped in 50 and 100 lbs bags, 3000 lbs available upon request.

These sands can also be used in the systems of industrial and municipal drinking water filtration. They are available in granulometry going from: 0.40mm, 1.5mm to 1/16"

ITEM	DESCRIPTION
507-22	Filtration sand, 0.45 - 0.55 mm (0.017 - 0.021"), 50 lbs.
507-45	Filtration sand, 0.45 - 0.55 mm (0.017 - 0.021"), 100 lbs.
520-22	Filtration sand, 0.65 mm (0.025"), 50 lbs.
→ SA-1	Filtration sand, 0.65 - 0.75 mm (0.025 - 0.029"), 50 lbs.
521-22	Filtration sand, 0.75 mm (0.029"), 50 lbs.
521-45	Filtration sand, 0.75 mm (0.029"), 100 lbs.
516-22	Filtration sand, 0.80 - 1.2 mm (0.031 - 0.047"), 50 lbs.
516-45	Filtration sand, 0.80 - 1.2 mm (0.031 - 0.047"), 100 lbs.
509-22	Filtration sand, 0.90 - 1.6 mm (0.035 - 0.063"), 50 lbs.
509-45	Filtration sand, 0.90 - 1.6 mm (0.035 - 0.063"), 100 lbs.
530-22	Filtration sand, 1.4 mm (0.055"), 50 lbs.
529-22	Filtration sand, 1.4 - 1.66 mm (0.035 - 0.065"), 50 lbs.
529-45	Filtration sand, 1.4 - 1.66 mm (0.035 - 0.065"), 100 lbs.
510-22	Filtration sand / gravel, 1.6 - 3.2 mm (1/16 - 1/8"), 50 lbs.
510-45	Filtration sand / gravel, 1.6 - 3.2 mm (1/16 - 1/8"), 100 lbs.
525-22	Filtration sand/gravel, 1.7 - 3.35 mm (0.067 - 0.131"), 50 lbs.
524-22	Filtration sand / gravel, 2.00 - 4.75 mm (0.078-0.187"), 50 lbs.
512-22	Filtration gravel, 3.2 - 6.4 mm (1/8 - 1/4"), 50 lbs.
512-45	Filtration gravel, 3.2 - 6.4 mm (1/8 - 1/4"), 100 lbs.

Technical Specifications Nested Pipe

Draft

FLANGED NESTABLE CORRUGATED STEEL PIPE

arm

FLANGED NESTABLE CORRUGATED STEEL PIPE

Flanged Nestable Corrugated Steel Pipe consists of half-round sections with side flanges that can be easily bolted together to form a circular corrugated steel pipe.

Flanged Nestable Pipe has many uses – as culverts, storm sewers, drains, casing and utilidors. The product is especially useful where a casing is to be installed around an existing utility without disturbing its operation.

The 610 mm long sections, all galvanized to Z 610, provide a product that is highly durable under normal conditions and which has proven itself since it was first produced in the early 1930's. Flanged Nestable is also available in Aluminized Steel Type II for added durability.

The sections are shipped nested and bundled together to save space during shipping. This results in cost savings, especially where the product is being shipped long distances to remote northern areas or overseas.

FASTENING METHOD: Flanged Nestable Pipe is easily assembled and no special instructions are necessary. Simple tools such as spud or socket wrenches are all that is required.

FLANGED NESTABLE PIPE SPECIFICATIONS: Half round sections are manufactured from 68 mm x 13 mm corrugated galvanized or Aluminized Type II in accordance with CSA G401 corrugated steel pipe products. Five corrugation long pieces are used on the top at both ends to introduce a circumferential seam stagger. The 50 mm wide flanges have slotted holes spaced at 68 mm centre to centre on both sides and are bolted together using galvanized 10 mm diameter bolts and nuts. All circumferential laps should be in the direction of flow.

H20 Live Load Steel Thickness of Flanged Nestable Pipe (mm)

DIAMETER	AREA	HEIGHT OF COVER ABOVE TOP OF PIPE IN METRES				
mm	m^2	3	4.5	6.0	7.5	9.0
300	.07	1.6	1.6	1.6	1.6	1.6
400	.13	1.6	1.6	1.6	1.6	1.6
450	.16	1.6	1.6	1.6	2.0	2.0
500	.20	1.6	1.6	1.6	2.0	2.0
→ 600	.28	1.6	1.6	2.0	2.0	2.0
700	.38	2.0	2.0	2.0	2.0	2.8
800	.50	2.0	2.0	2.0	2.8	2.8
900	.64	2.0	2.0	2.0	2.8	2.8
1000	.79	2.0	2.0	2.8	2.8	2.8
1200	1.13	2.8	2.8	2.8	2.8	3.5
1400	1.51	2.8	2.8	2.8	3.5	3.5
1600	2.01	2.8	2.8	3.5	3.5	3.5

Note: 1. Minimum Cover is 300 mm up to 1200 mm diameter and 500 for 1400 mm and1600 mm diameter.
2. Structures should be backfilled with well compacted granular backfill to a minimum of 95% Standard Proctor Density.

Approximate Weights kg/m

DIAMETER	WALL THICKNESS mm			
mm	1.6	2.0	2.8	3.5
300	18	22	31	39
400	22	28	39	49
450	24	31	43	54
500	27	34	48	60
→ 600	31	39	54	68
700	36	45	62	79
800	41	51	70	89
900	45	56	77	97
1000	48	61	83	101
1200	59	74	102	126
1400	68	85	118	146
1600	78	97	134	166

Head Office: 370 Speedvale Ave. W., P.O. Box 3000, Guelph, Ontario N1H 6P2
www.armtec.com

Sales Offices:
Nanaimo, Prince George, Langley, Edmonton, Calgary, Lethbridge, Saskatoon, Winnipeg, Thunder Bay, Sudbury, Guelph, Toronto, Peterborough, Chesterville, Forest, Orangeville, Comber, Montreal, Quebec City, St. Clet, Sackvile, Truro, Summerside, Bishop's Falls and St. John's.

FNP/BP/30C/0607

Technical Specifications Geotextile

Draft

FICHE TECHNIQUE TEXEL

7612

Texel®
A DIVISION OF ADS INC.
UNE DIVISION DE ADS INC.

IDENTIFICATION DU PRODUIT		EMBALLAGE ET EXPÉDITION	
Nom et code du produit:	7612 / 21902	Format:	Rouleaux
Description:	7612 3.50M PP GR H 100M BNQ 701	Dimensions[2]:	3.50 m X 100 m (ASTM D461.8 et .9)
Type de produit: model	Non-tissé aiguilleté, Monofilament court	Emballage:	Sac de plastique
Type de fibre:	Polypropylène	Étiquetage:	Des étiquettes identifiant le produit sont placées sur la queue du sac, sur le coté du rouleau et dans le tube.
Armature:	Aucune		

FONCTION PREMIÈRE ☒ Séparation ☐ Filtration ☐ Imperméabilisation ☐ Drainage ☐ Protection ☐ Renforcement

SPÉCIFICATIONS DU PRODUIT

PROPRIÉTÉS	MÉTHODE DE TEST	FRÉQUENCE	RÉSULTATS	MIN[1]-MOY-MAX
Physiques				
Épaisseur[2]	ASTM D5199	Standard	1.4 mm	MIN
Mécaniques				
Tension (SP)	ONGC 148.1-7.3	Standard	800 N	MIN
Tension (ST)	ONGC 148.1-7.3	Standard	800 N	MIN
Allongement à la rupture (SP)	ONGC 148.1-7.3	Standard	56% - 84%	MIN-MAX
Allongement à la rupture (ST)	ONGC 148.1-7.3	Standard	56% - 84%	MIN-MAX
Déchirure (SP)	ONGC 4.2-12.2	Standard	360 N	MIN
Déchirure (ST)	ONGC 4.2-12.2	Standard	360 N	MIN
Résistance à l'éclatement (Mullen)	ONGC 4.2-11.1	Standard	2275 kPa	MIN
Hydrauliques				
Diamètre d'ouverture de filtration (FOS)	ONGC 148.1-10	1 / an	70 µm - 130 µm	MIN-MAX
Permittivité	ONGC 148.1-4	1 / an	0.96 s-1	MIN
Perméabilité[2]	ONGC 148.1-4	1 / an	0.20 cm/s	MIN

MIN[1] : valeurs minimales de la tolérance 95 de la spécification GCTTG 3001-06 en fonction de la valeur nominale de certification.

[2]: Cette caractéristique ne fait pas partie de la certification à la spécification GCTTG 2001-06.

- Cette information technique provient du manufacturier et a été transcrite par Texel Géosol. L'utilisateur est par conséquent invité à s'assurer d'obtenir la dernière mise à jour.
- Le manufacturier n'offre aucune garantie et n'assume aucune responsabilité relative à l'usage, à l'installation et/ou à la convenance d'utilisation.
- Le manufacturier doit être informé de tout défaut ou non-conformité du produit avant son installation. Sa responsabilité se limite au remplacement du produit non-conforme ou défectueux.
- La conformité aux spécifications est basée sur un intervalle de confiance de 95% sur un lot.

- Les produits Texel sont fabriqués au Québec depuis 1967 et sont contrôlés par un service de qualité certifiée.

Veuillez consulter notre représentant technique pour plus d'informations sur les produits Texel Géosol et sur les projets réalisés depuis près de 45 ans avec les géosynthétiques Texel Géosol.

Pour le service de coupe et couture en usine ou au chantier, veuillez consulter nos représentants.

distribué par:

Texel Géosol inc.
Certifié ISO 9001 : 2008

• *Tél.: (418) 658-0200 / 1 800 463-0088* • *Téléc.: (418) 658-0477*
• *www.texelgeosol.com* • *info@texelgeosol.com*

MISE À JOUR CHEZ TEXEL GÉOSOL
EN DATE DU: 2008-08-19 / 2010-09-07
VÉRIFIÉ PAR: RT

TEXEL TECHNICAL DATA SHEET

7612

Texel® A DIVISION OF ADS INC. / UNE DIVISION DE ADS INC.

PRODUCT IDENTIFICATION		PACKING AND SHIPPING	
Product name and code:	7612 / 21902	Format:	Rouleaux
Description:	7612 3.50M PP GR H 100M BNQ 701	Dimensions[2]:	3.50 m X 100 m (ASTM D461.8 et .9)
Product type:	Needleounched nonwoven, short staple fiber	Packing:	Plastic bag
Fiber composition:	Polypropylene	Labeling:	Tags identifying the product are placed: on the tail of the bag, on one side of the roll and in the core
Reinforcement:	None		

FIRST FUNCTION [x] Separation [ ] Filtration [ ] Proofing [ ] Drainage [ ] Protection [ ] Reinforcement

PRODUCT SPECIFICATIONS				
PROPERTIES	TEST METHOD	FREQUENCY	RESULTS	MIN[1]-MOY-MAX
Physical				
Thickness[2]	ASTM D5199	Standard	1.4 mm	MIN
Mechanical				
Elongation at break (CD)	CGSB 148.1-7.3	Standard	800 N	MIN
Elongation at break (MD)	CGSB 148.1-7.3	Standard	800 N	MIN
Tensile strength (CD)	CGSB 148.1-7.3	Standard	56% - 84%	MIN-MAX
Tensile strength (MD)	CGSB 148.1-7.3	Standard	56% - 84%	MIN-MAX
Tear strength (CD)	CGSB 4.2-12.2	Standard	360 N	MIN
Tear strength (MD)	CGSB 4.2-12.2	Standard	360 N	MIN
Bursting strength (Mullen)	CGSB 4.2-12.2	Standard	2275 kPa	MIN
Hydraulic				
Diamètre d'ouverture de filtration (FOS)	CGSB 148.1-10	1 / yr	70 µm - 130 µm	MIN-MAX
Permittivité	CGSB 148.1-4	1 / yr	0.96 s-1	MIN
Perméabilité[2]	CGSB 148.1-4	1 / yr	0.20 cm/s	MIN

MIN[1] : minimum values of tolerance 95 specification GCTTG 3001-06 based on the nominal value of certification.

[2]: This feature is not part of the certification specification GCTTG 2001-06.

- This technical information comes from the manufacturer and was transcribed by Texel Geosol. The user is consequently invited to ensure himself to obtain the last update.
- The manufacturer does not offer any guarantee and does not assume any comparative responsability with use, the installation and/or the suitability of use.
- The manufacturer must be informed of any default or nonconformity of the product before its installation. Its responsibility is limited to the replacement of the product not-in conformity or defective.
- The conformity to the specifications is based on a confidence level of 95% within a lot.

- Texel products are manufactured in Quebec since 1967 and are controlled by a certified quality service.

Please consult our technical representative for more information on Texel Geosol products and the projects carried out for more than 45 years with Texel Geosol's geosynthetics.

For our cutting and sewing services at our warehouse or on your jobsite, please consult our representatives.

distributed by:

Texel GEOSOL

Certified ISO 9001 : 2008

• Tel.: (418) 658-0200 / 1 800 463-0088 • Fax.: (418) 658-0477
• www.texelgeosol.com • info@texelgeosol.com

UPDATED AT TEXEL GEOSOL
ON: 2010-01-08 / 2010-09-07
CHECKED BY: RT