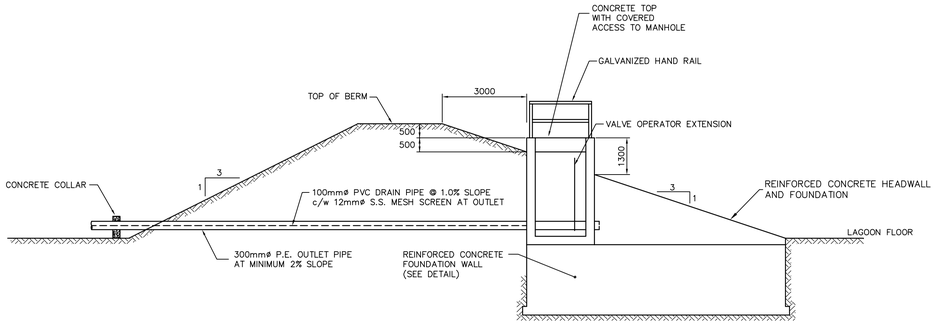

LAGOON OUTLET CHAMBER

N.T.S.

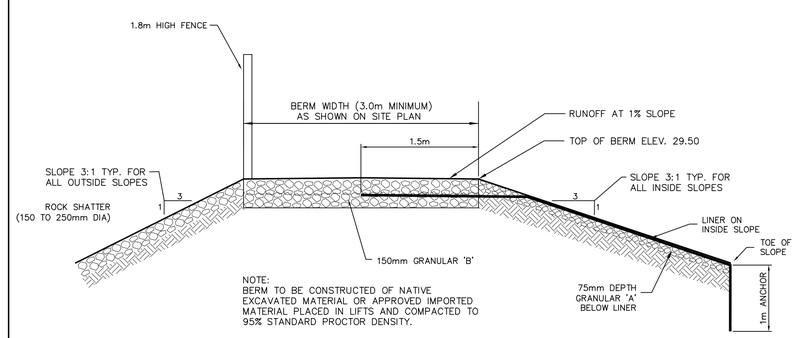

NOTE:
BERM TO BE CONSTRUCTED OF NATIVE EXCAVATED MATERIAL OR APPROVED IMPORTED MATERIAL PLACED IN LIFTS AND COMPACTED TO 95% STANDARD PROCTOR DENSITY.

TYPICAL BERM CONSTRUCTION

N.T.S.

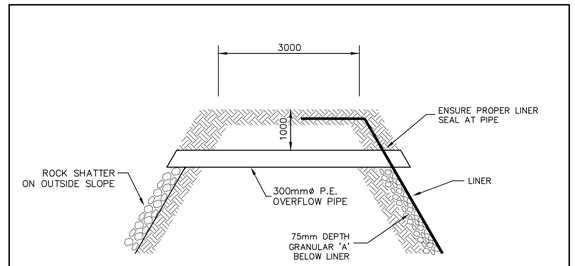

OVERFLOW DETAIL

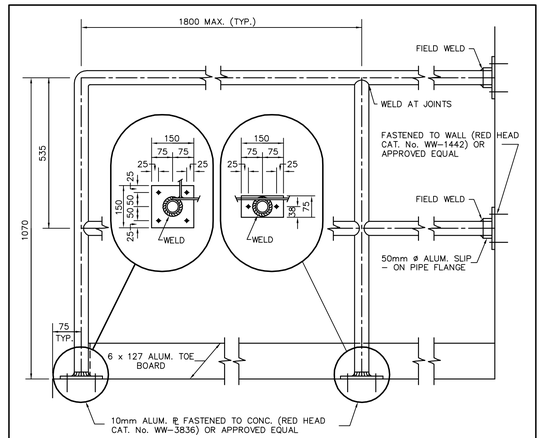

HANDRAIL DETAILS

N.T.S.

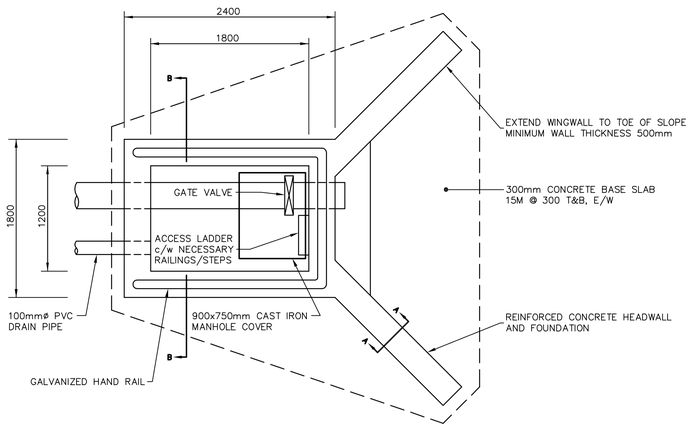

OUTLET CHAMBER
TOP VIEW

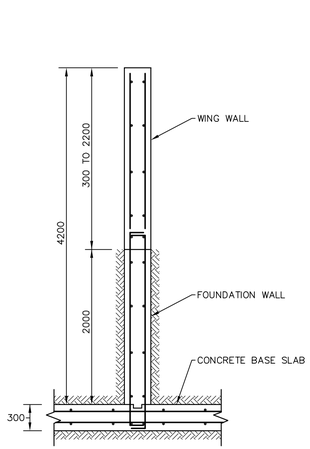

SECTION A–A

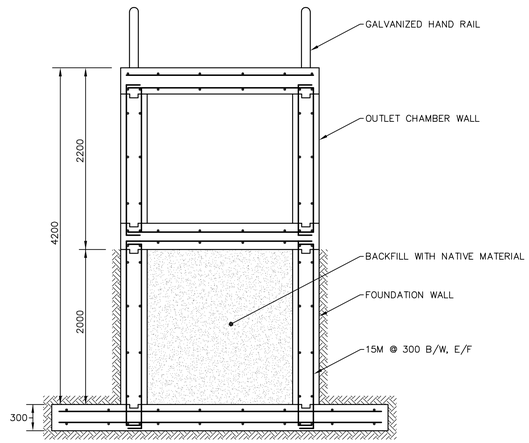

SECTION B–B

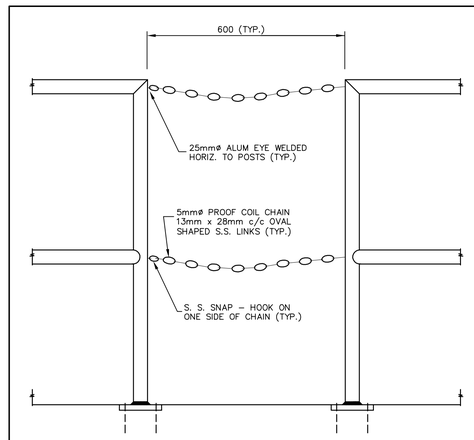

REMOVABLE SAFETY CHAIN DETAIL

N.T.S.

1. This drawing is the exclusive property of Nuna Burnside Engineering and Environmental Ltd. and the reproduction of any part without prior written consent of this office is strictly prohibited.

2. The contractor shall verify all dimensions, levels, and datums on site and report any discrepancies or omissions to this office prior to construction.

3. This drawing is to be read and understood in conjunction with all other plans and documents applicable to this project.

No.	Issue / Revision	Date
1	Client Review and Approval	April 10, 2006
2	Client Review and Approval	June 26, 2006
3	Issued for tender	July 17, 2006

NOTES:

1. ALL AREAS DISTURBED BY CONTRACTOR DURING CONSTRUCTION ACTIVITIES SHALL BE REINSTATED TO ORIGINAL CONDITION OR BETTER, BY THE CONTRACTOR.

Nuna Burnside
Nuna Burnside Engineering and Environmental Ltd.
Box 175, 25 Third Avenue, Rankin Inlet, NU.
telephone (867) 645-2762 **fax** (867) 645-2765
15 Townline, Orangeville, Ontario
telephone (519) 941-0342 **fax** (519) 941-8120
email info@nunaburnside.com
web www.nunaburnside.com

Client
GOVERNMENT OF NUNAVUT
PROJECT MANAGEMENT DIVISION
DEPARTMENT OF COMMUNITY AND GOVERNMENT SERVICES (CGS)
KITMEOT REGION
P.O. BAG 200
CAMBRIDGE BAY, NUNAVUT
X0B 0C0

Drawing Title
THE HAMLET OF KUGLUKTUK
PROPOSED SEWAGE LAGOON DETAILS – SHEET No. 1

GN Project No.	Drawn By	Checked By	Drawing
04-4406	R.A.	M.O'Hara/ X. Fernandes	4
	Scale: NTS	Nuna Burnside Project No.: N-O 09755.0	

K:\DWG\FEO JOB\FEO 09754\Kugluktuk FEO09754.0\engineer\FEO09754 SL- DETAILS.dwg
Sep 15, 2006 - 11:52am

PDF created with pdfFactory Pro trial version www.pdffactory.com