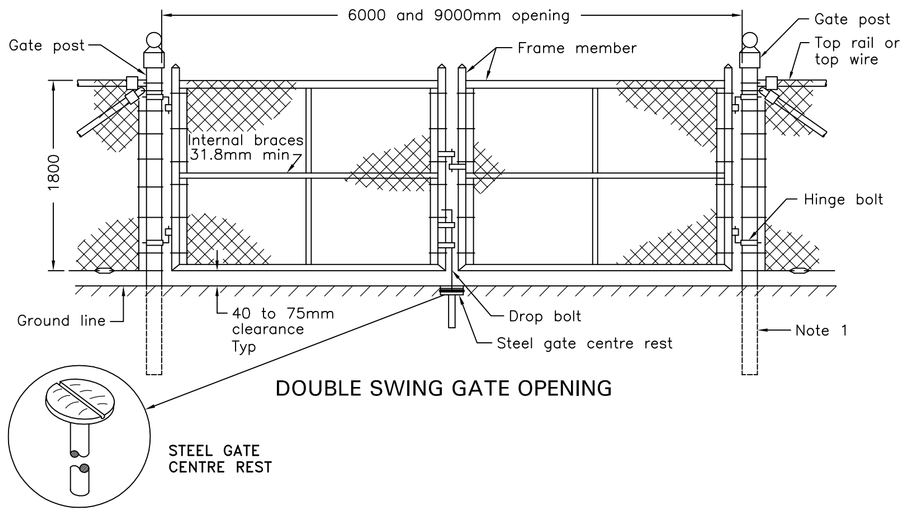

DOUBLE SWING GATE OPENING

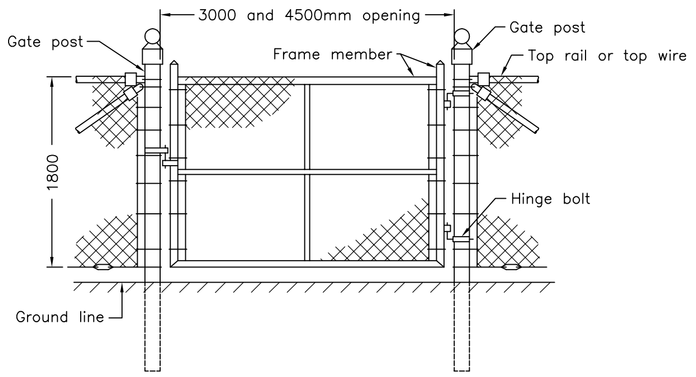

SINGLE SWING GATE OPENING

GATE AND GATE POST DETAILS			
Gate type and max opening m	Frame member min OD mm	Post dia min OD mm	Post length standard m
Single swing 3.0 Double swing 6.0	42.9	88.9	2.6
Single swing 4.5 Double swing 9.0	48.3	114.3	2.9

NOTES:

A Gate frames greater than 3.6m in width are supplied with diagonal braces.

B All dimensions are in millimetres unless otherwise shown.

FENCE, CHAIN LINK COMPONENT – GATE

NTS

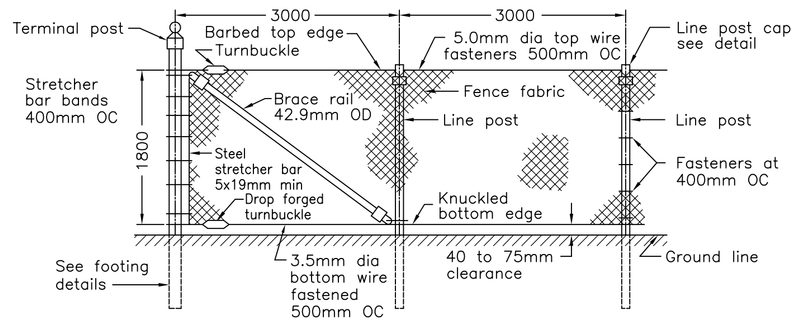

CHAIN LINK FENCE WITH TOP WIRE

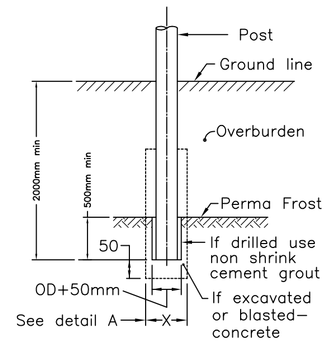

TERMINAL AND LINE POST DETAIL (TYPICAL)

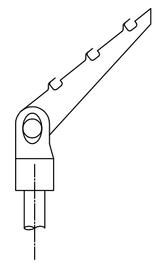

NOTE:

A All dimensions are in millimetres unless otherwise shown.

LINE POST WITH BARBED WIRE ARM

CHAIN LINK FENCE DETAILS

N.T.S.

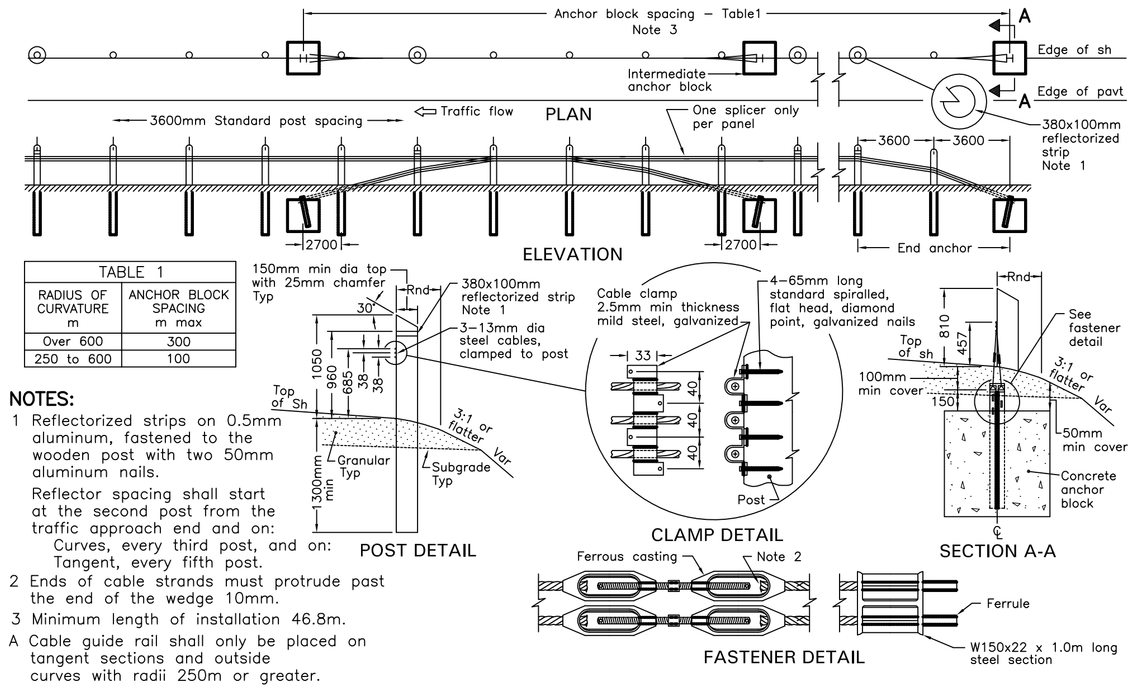

NOTES:

1 Reflectorized strips on 0.5mm aluminum, fastened to the wooden post with two 50mm aluminum nails.

Reflector spacing shall start at the second post from the traffic approach end and on:
Curves, every third post, and on:
Tangent, every fifth post.

2 Ends of cable strands must protrude past the end of the wedge 10mm.

3 Minimum length of installation 46.8m.

A Cable guide rail shall only be placed on tangent sections and outside curves with radii 250m or greater.

B All dimensions are in millimetres unless otherwise shown.

TABLE 1	
RADIUS OF CURVATURE m	ANCHOR BLOCK SPACING m max
Over 600	300
250 to 600	100

GUIDE RAIL SYSTEM, CABLE THREE CABLE – WOOD POST INSTALLATION – SHOULDER

NTS

1. This drawing is the exclusive property of Nuna Burnside Engineering and Environmental Ltd. and the reproduction of any part without prior written consent of this office is strictly prohibited.

2. The contractor shall verify all dimensions, levels, and datums on site and report any discrepancies or omissions to this office prior to construction.

3. This drawing is to be read and understood in conjunction with all other plans and documents applicable to this project.

No.	Issue / Revision	Date
1	Client Review and Approval	April 10, 2006
2	Client Review and Approval	June 26, 2006
3	Issued for tender	July 17, 2006
4	General Revisions – Client Review and Approval	March 21, 2007
5	Issued for Construction	May 2, 2007

PERMIT TO PRACTICE
Nuna Burnside Engineering and Environmental Ltd.
Signature
Date June 18/2007
PERMIT NUMBER: P 535
The Association of Professional Engineers, Geologists and Geophysicists of NWT/NU

REGISTERED PROFESSIONAL ENGINEER G.J. KOROVICH LICENSEE 06/18/07 NWT/NU

NOTES:

1. ALL AREAS DISTURBED BY CONTRACTOR DURING CONSTRUCTION ACTIVITIES SHALL BE REINSTATED TO ORIGINAL CONDITION OR BETTER, BY THE CONTRACTOR.

Nuna Burnside
Nuna Burnside Engineering and Environmental Ltd.
Box 175, 25 Third Avenue, Rankin Inlet, NU
telephone (867) 645-2762 fax (867) 645-2765
15 Townline, Orangeville, Ontario
telephone (519) 941-0342 fax (519) 941-8120
email info@nunaburnside.com
web www.nunaburnside.com

Nunavut

Client
GOVERNMENT OF NUNAVUT
PROJECT MANAGEMENT DIVISION
DEPARTMENT OF COMMUNITY AND GOVERNMENT SERVICES (CGS)
KITIMEOT REGION
P.O. BAG 200
CAMBRIDGE BAY, NUNAVUT
X0B 0C0

GN Project No. 04–4406

Drawing Title
THE HAMLET OF KUGLUKTUK
PROPOSED SEWAGE LAGOON
DETAILS – SHEET No. 2

Drawn By	Checked By	Drawing
R.A.	M.O'Hara/ X. Fernandes	5
Scale: NTS	Nuna Burnside Project No. N–O 09755.0	

X:\Files 2005(E)\FEO 09754 Kugluktuk Sewage & Solid Waste\700 Drawings\Lagoon Redesign\FEO09754 SL– DETAILS–redesign.dwg
Jun 19, 2007 – 4:37pm