LANDFILL PERIMETER BERM CROSS SECTION A–A

SCALE 1:50

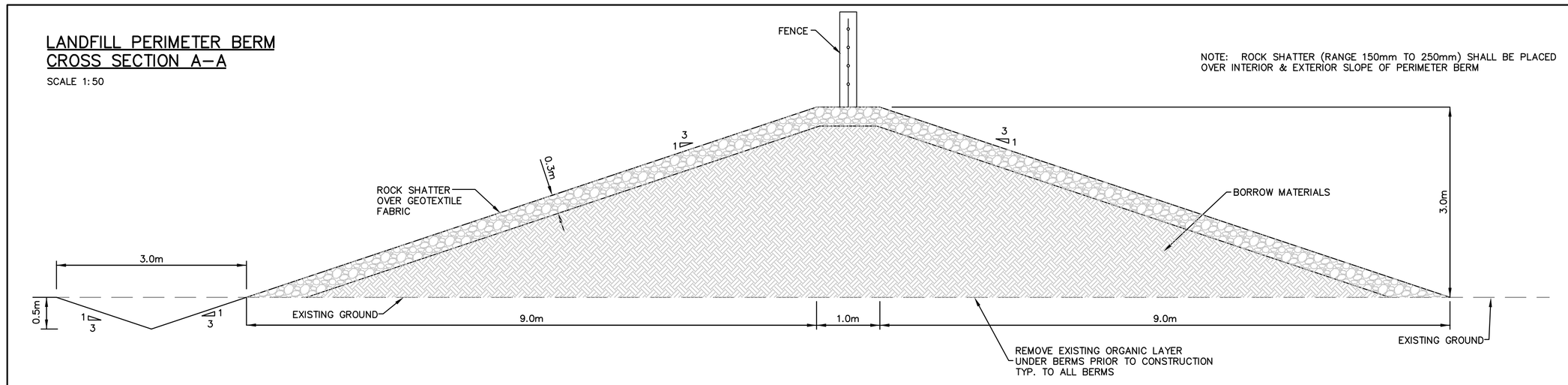

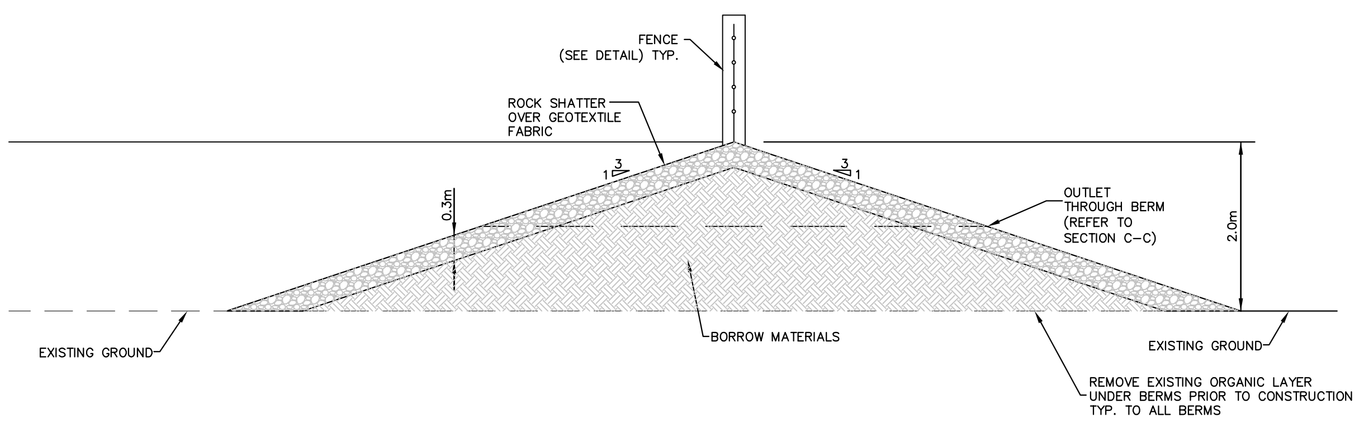

WATER RETENTION AREA CROSS SECTION B–B

SCALE 1:50

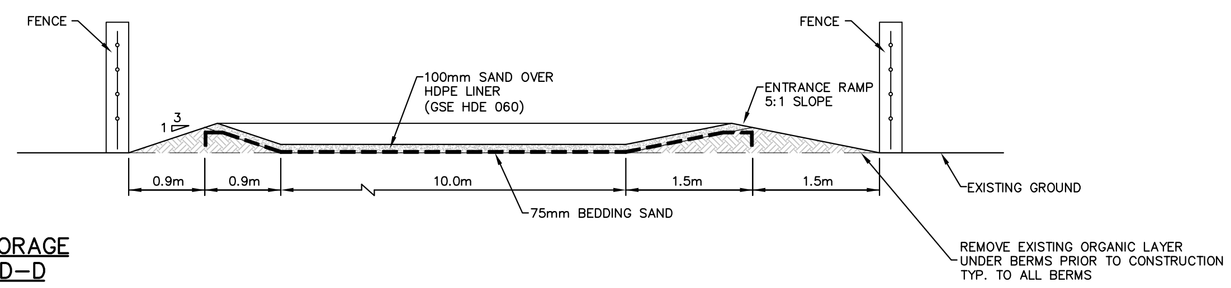

HAZARDOUS WASTE STORAGE AREA CROSS SECTION D–D

SCALE 1:50

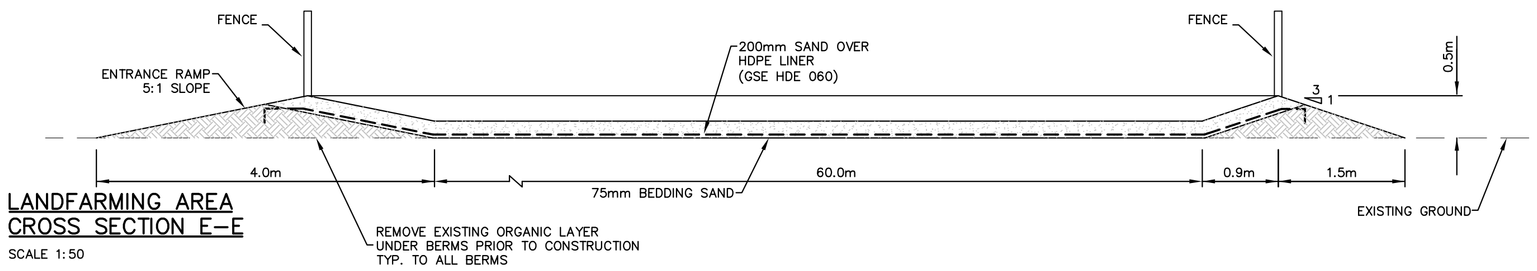

LANDFARMING AREA CROSS SECTION E–E

SCALE 1:50

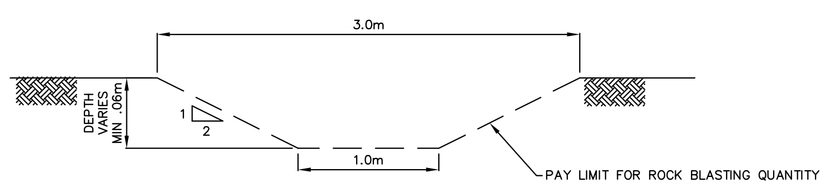

TYPICAL PERIMETER DITCH DETAIL

SCALE NTS

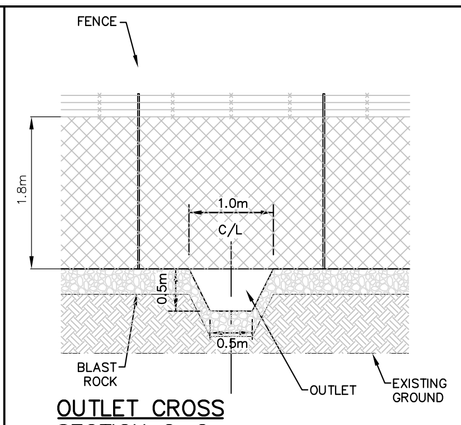

OUTLET CROSS SECTION C–C

SCALE 1:50

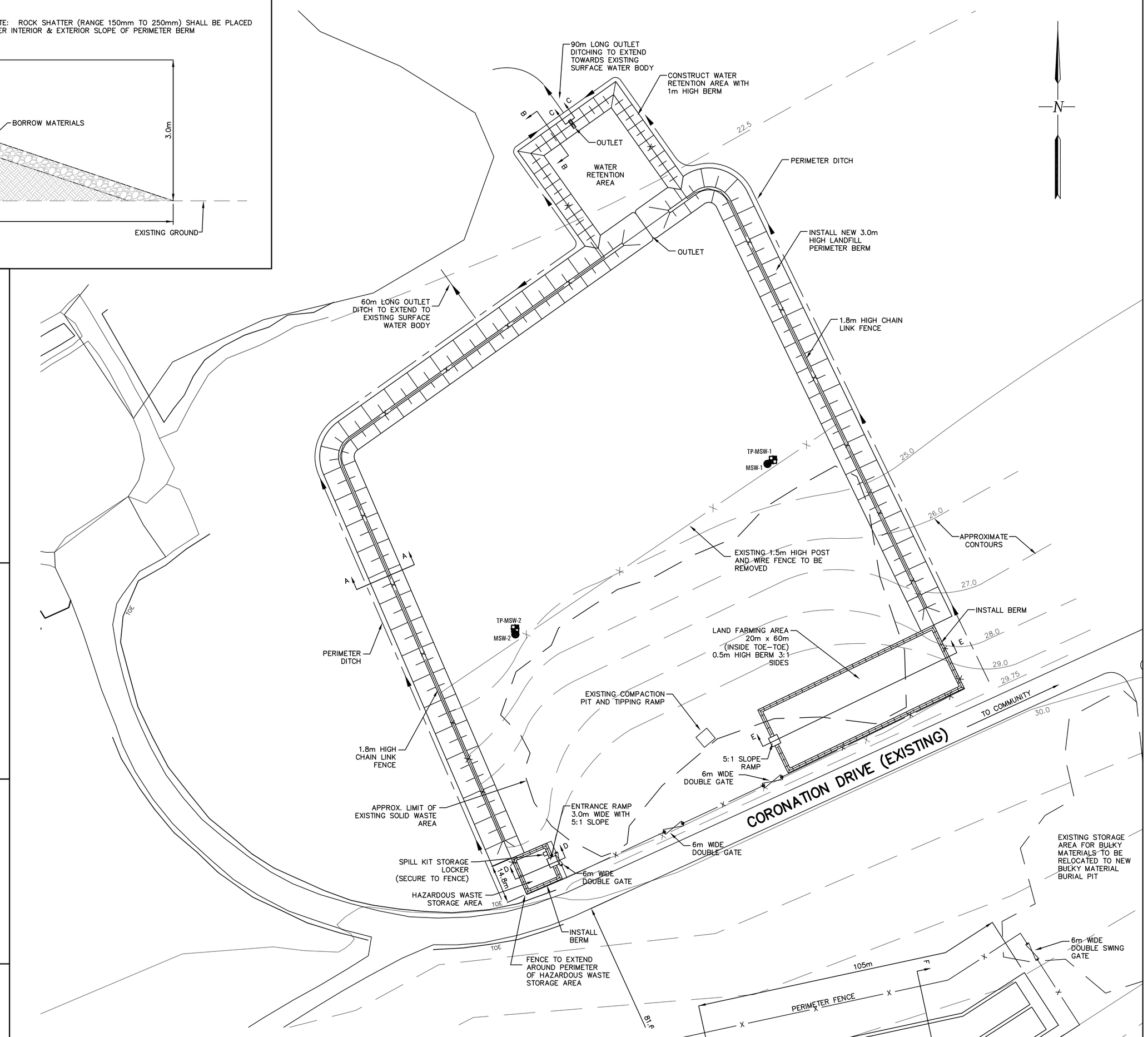

SOLID WASTE DISPOSAL SITE PLAN

SCALE 1:750

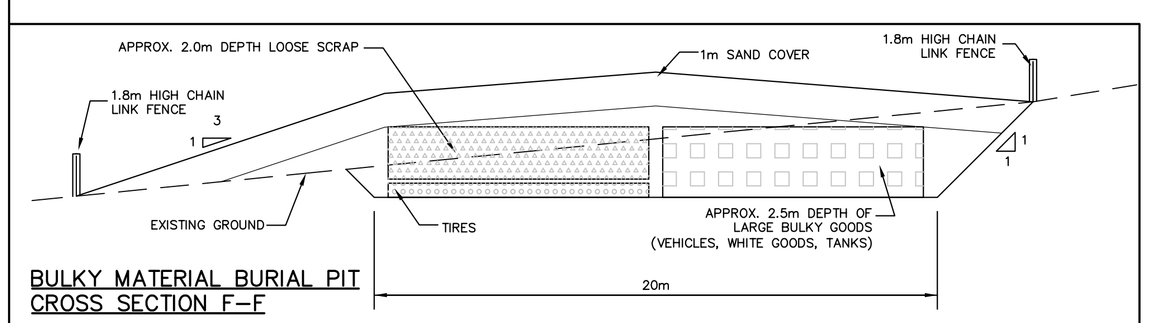

BULKY MATERIAL BURIAL PIT CROSS SECTION F–F

SCALE 1:150

1. This drawing is the exclusive property of Nuna Burnside Engineering and Environmental Ltd. and the reproduction of any part without prior written consent of this office is strictly prohibited.

2. The contractor shall verify all dimensions, levels, and datums on site and report any discrepancies or omissions to this office prior to construction.

3. This drawing is to be read and understood in conjunction with all other plans and documents applicable to this project.

No.	Issue / Revision	Date
1	Client Review and Approval	April 10, 2006
2	Client Review and Approval	June 26, 2006
3	Issued for tender	July 17, 2006
4	General Revisions – Client Review and Approval	March 21, 2007
5	Issued for Construction	May 2, 2007

PERMIT TO PRACTICE
Nuna Burnside Engineering and Environmental Ltd.
Signature
Date June 18/2007
PERMIT NUMBER: P 535
The Association of Professional Engineers, Geologists and Geophysicists of NWT/NU

REGISTERED PROFESSIONAL ENGINEER
J. POPOWICH
LICENSEE
NWT/NU

NOTES:

1. ALL AREAS DISTURBED BY CONTRACTOR DURING CONSTRUCTION ACTIVITIES SHALL BE REINSTATED TO ORIGINAL CONDITION OR BETTER, BY THE CONTRACTOR.
2. CONTRACTOR SHALL LOAD, HAUL AND PLACE AS SHOWN EXISTING TIRES, BULKY GOODS AND LOOSE SCRAP FROM EXISTING STORAGE AREA TO BULKY MATERIALS BURIAL PIT.
3. TOPOGRAPHIC CONTOURS SHOWN ARE APPROXIMATE AND ARE DERIVED FROM REGIONAL TOPOGRAPHIC MAPS.

NUNA BURNSIDE
Nuna Burnside Engineering and Environmental Ltd.
Box 175, Rankin Inlet, NU.
telephone (867) 645-2762 fax (867) 645-2765
15 Towline, Orangeville, Ontario
telephone (519) 941-0342 fax (519) 941-8120
email info@nunaburnside.com
web www.nunaburnside.com

Nunavut

Client
GOVERNMENT OF NUNAVUT
PROJECT MANAGEMENT DIVISION
DEPARTMENT OF COMMUNITY AND GOVERNMENT SERVICES (CGS)
KITIKMEOT REGION
P.O. BAG 200
CAMBRIDGE BAY, NUNAVUT
X0B 0C0

Drawing Title
THE HAMLET OF KUGLUKTUK

SOLID WASTE DISPOSAL FACILITY IMPROVEMENTS

Drawn By	Checked By	Drawing
T.T.	K. Hunter	1
GN Project No. 04–4406	Scale AS SHOWN	Nuna Burnside Project No. N–0 09755.0

X:\Files 2005(E)\FEO 09754 Kugluktuk Sewage & Solid Waste\700 Drawings\Lagoon Redesign\N–09755–G1–may 8.dwg
Jun 10, 2007 – 4:28pm

Xref 2: U:\WO\FEO JOB\FEO 09754\Kugluktuk FEO09754-01\Detailed Design\N–09755–BASE
Xref 3: U:\WO\FEO JOB\FEO 09754\Kugluktuk FEO09754-01\Detailed Design\From Designers\FEO09754 NAD83 NTS BASE