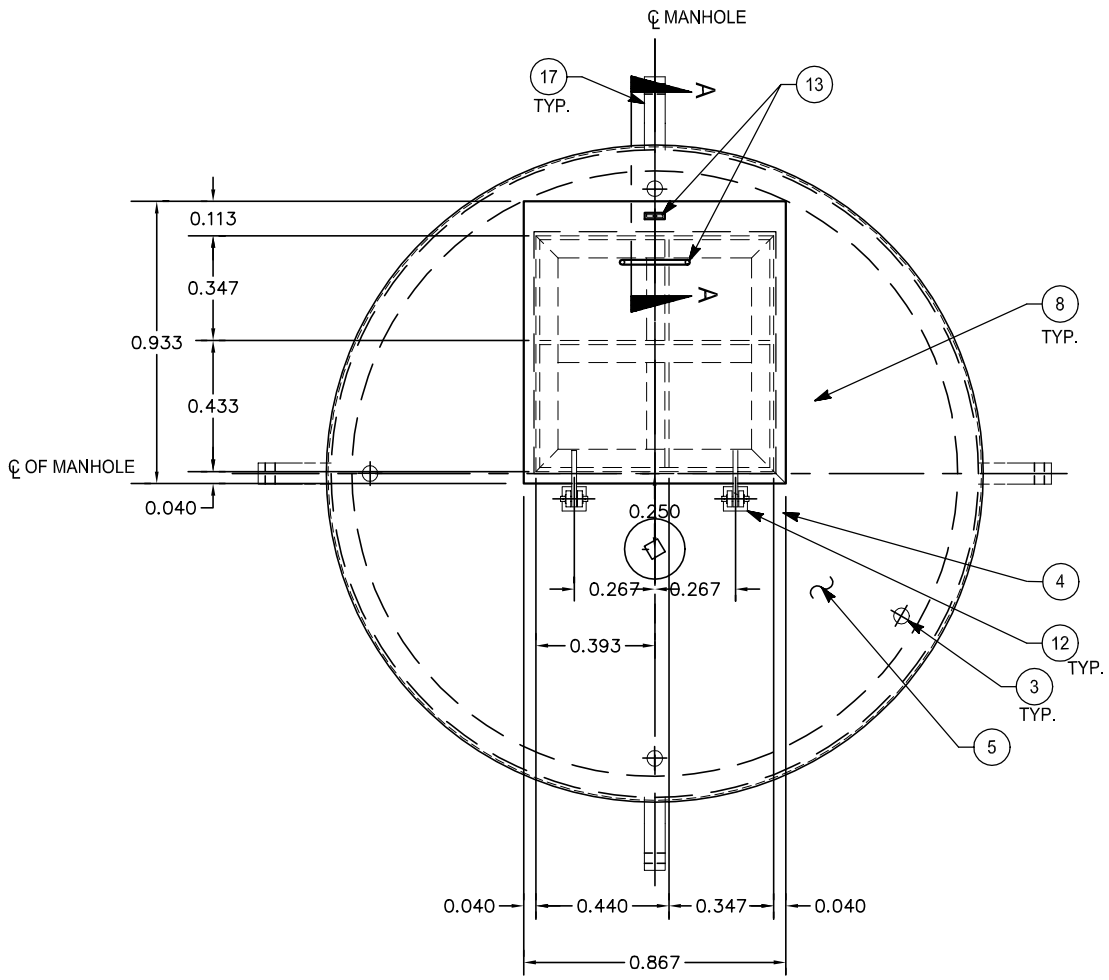

NOTE: DIMENSIONS IN METRES

MANHOLE - ACCESS HATCH FRAMING PLAN

FSC GROUP

FERGUSON SIMEK CLARK
ENGINEERS AND ARCHITECTS
Suite 202-107 Main Street
Whitehorse, Y.T. Canada
Y1A 2A7

F.S.C. JOB NO. 2002–0420

JOB TITLE
SEWAGE LAGOON UPGRADE & EXPANSION

POND INLET, NU

DRAWING TITLE
CLARIFICATION 2

DESIGNED BY WO/RK	SCALE 1:25
DRAWN BY RW/SD	DATE JULY 26, 2002
CHECKED BY RK	JOB NUMBER 2002–0420
SHEET 2 OF 3	DRAWING NO SK–2