BOOST PUMP

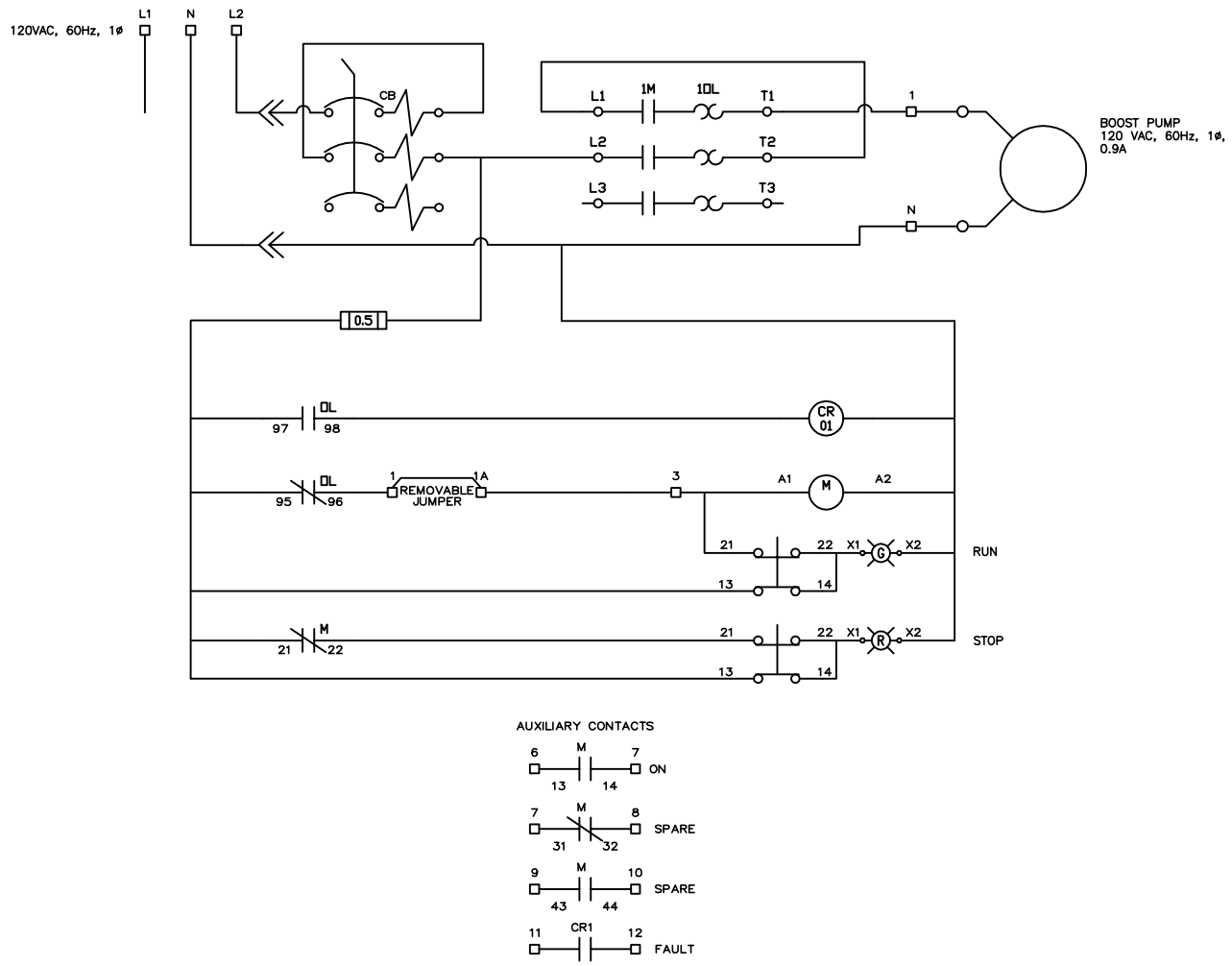

SUMP PUMP

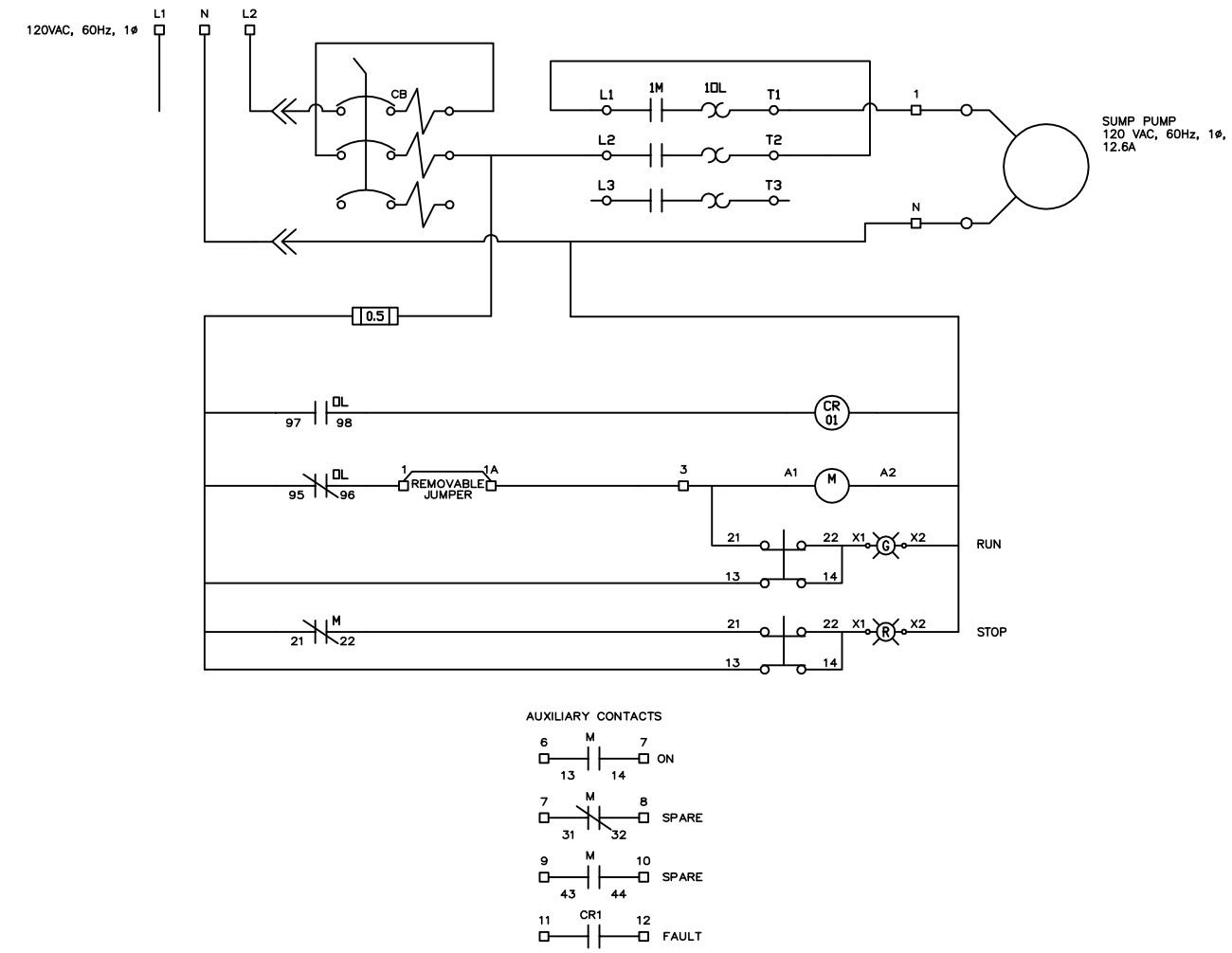

BI Pure Water (Canada) Inc.

#2, 9790 - 190th Street
Surrey, BC V4N 3M9
Phone: (604) 882-6650
Fax: (604) 882-6659
http://www.bipurewater.ca

THE INFORMATION CONTAINED IN THIS DRAWING IS THE SOLE PROPERTY OF **BI PURE WATER (CANADA) INC.** ANY REPRODUCTION IN PART OR WHOLE OF THE INFORMATION HEREIN, WITHOUT THE WRITTEN PERMISSION OF BI PUREWATER (CANADA) INC., IS STRICTLY PROHIBITED.

Status: AS BUILT

Issue	Date	Appd	Revision Description

Design By: MG
Drawn By: KD
Checked By:
Submitted
Approved

Client: KITNUNA PROJECTS INC.

Title: MCC CONTROL CHANGES

Project: POTABLE WATER TREATMENT PLANT TALOYOAK

Drawing #: 1772-EL-500

Scale: NTS
Date: JULY 6,2010
Sheet 1 of 3
Job# 1772
Rev: A

INTAKE PUMP CONTROLS

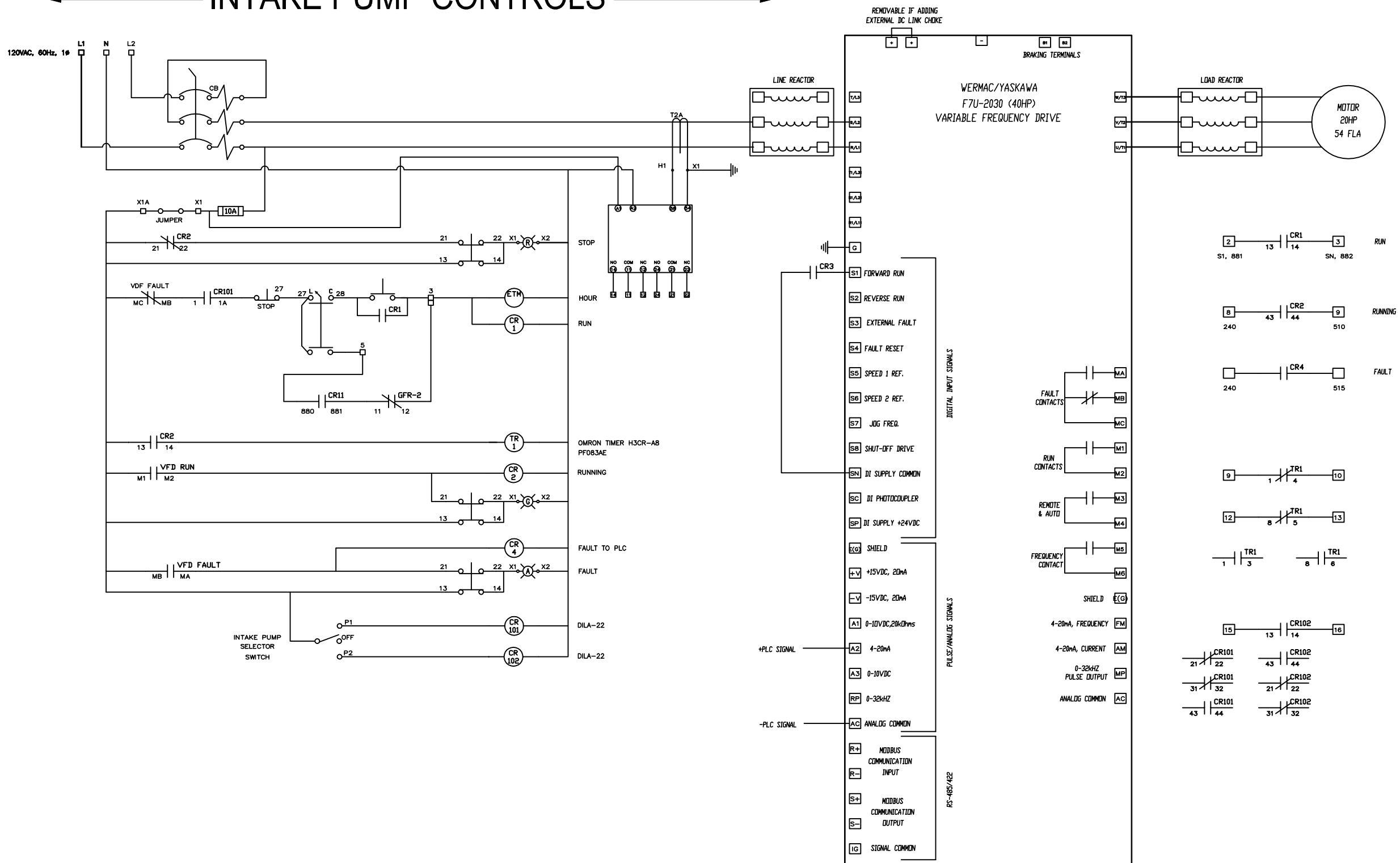

BI Pure Water (Canada) Inc.

#2, 9790 - 190th Street
Surrey, BC V4N 3M9
Phone: (604) 882-6650
Fax: (604) 882-6659
http://www.bipurewater.ca

THE INFORMATION CONTAINED IN THIS DRAWING IS THE SOLE PROPERTY OF **BI PURE WATER (CANADA) INC.** ANY REPRODUCTION IN PART OR WHOLE OF THE INFORMATION HEREIN, WITHOUT THE WRITTEN PERMISSION OF BI PUREWATER (CANADA) INC., IS STRICTLY PROHIBITED.

Status: AS BUILT

Issue	Date	Appd	Revision Description

Design By:	MG
Drawn By:	KD
Checked By:	
Submitted	
Approved	

Client: KITNUNA PROJECTS INC

Title:	MCC CONTROL CHANGES
Project:	POTABLE WATER TREATMENT PLANT TALOYOAK
Drawing #:	1772-EL-500
Scale	NTS
Date	JULY 6,2010
Sheet	2 of 3
Job#	1772
Rev:	A

INTAKE PUMP CONTROLS

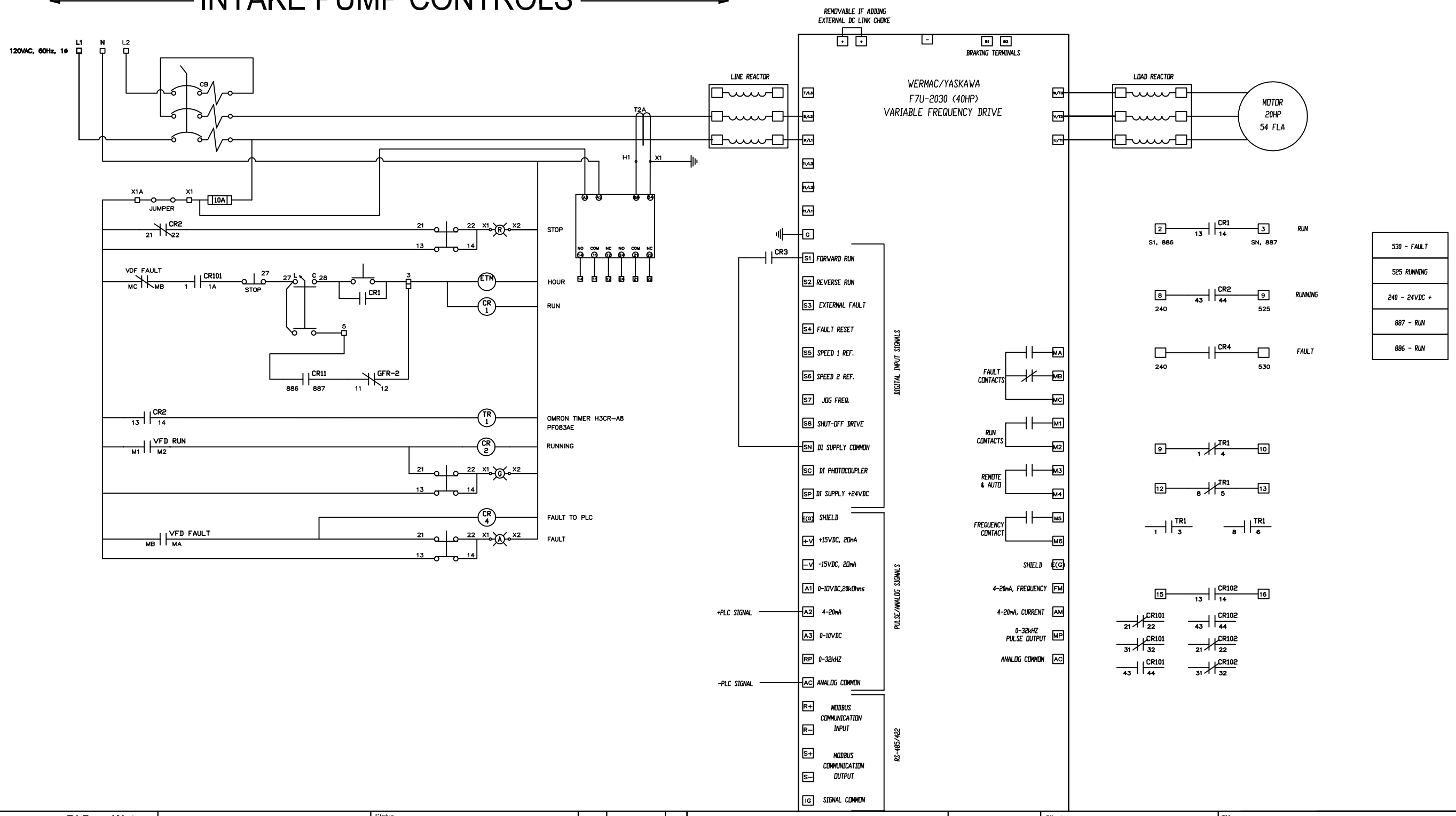

BI Pure Water (Canada) Inc.

#2, 9790 - 190th Street
Surrey, BC V4N 3M9
Phone: (604) 882-6650
Fax: (604) 882-6659
http://www.bipurewater.ca

THE INFORMATION CONTAINED IN THIS DRAWING IS THE SOLE PROPERTY OF **BI PURE WATER (CANADA) INC.** ANY REPRODUCTION IN PART OR WHOLE OF THE INFORMATION HEREIN, WITHOUT THE WRITTEN PERMISSION OF BI PUREWATER (CANADA) INC., IS STRICTLY PROHIBITED.

Status: AS BUILT

Issue	Date	Appd	Revision Description

Design By:	MG
Drawn By:	KD
Checked By:	
Submitted	
Approved	

Client: KITNUNA PROJECTS INC

Title:	MCC CONTROL CHANGES
Project:	POTABLE WATER TREATMENT PLANT TALOYOAK
Drawing #:	1772-EL-500
Scale	NTS
Date	JULY 6,2010
Sheet	3 of 3
Job#	1772
Rev:	A