NOTES:

1) 120 VAC, 1ø, 10 AMP, 1 CONDUCTOR, 1 NEUTRAL
   1 GROUND PER PANEL

FUSES:

FAST ACTING FUSES 600 VAC:

1) 10 AMPS SYSTEM POWER
2) 1 AMP CONTROL POWER
3) **1 AMP 24VDC POWER SUPPLY**

CONTROL RELAYS:

SPDT 7A 250V RELAYS
1CR POWER ON

LEDGEND:

- CONTROL RELAY OR MOTOR CONTACT COIL
- FLOAT SWITCH
- FUSE
- GENERAL APPLIANCE
- GROUND
- INDICATOR LIGHT
- MOTOR
- RELAY CONTACT
- SWITCH
- TERMINAL BLOCK
- WIRE NUMBER

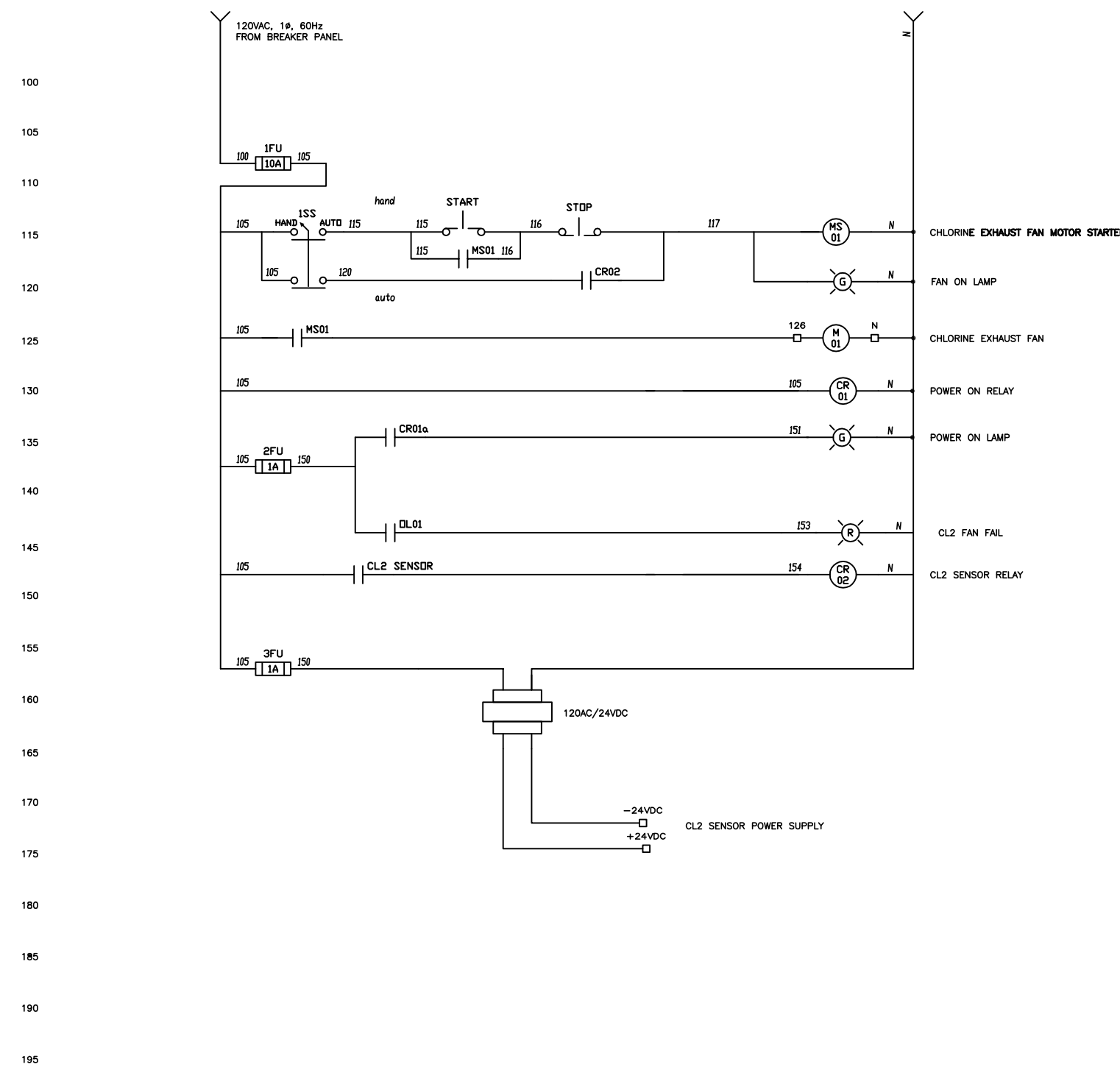

BI Pure Water (Canada) Inc.
#2, 9790 - 190th Street
Surrey, BC V4N 3M9
Phone: (604) 882-6650
Fax: (604) 882-6659
http://www.bipurewater.ca

THE INFORMATION CONTAINED IN THIS DRAWING IS THE SOLE PROPERTY OF **BI PURE WATER (CANADA) INC.** ANY REPRODUCTION IN PART OR WHOLE OF THE INFORMATION HEREIN, WITHOUT THE WRITTEN PERMISSION OF BI PUREWATER (CANADA) INC., IS STRICTLY PROHIBITED.

Status: AS BUILT

Issue	Date	Appd	Revision Description
A	FEB 22, 10		ISSUED FOR REVIEW

Design By: KD
Drawn By: KD
Checked By:
Submitted
Approved

Client: KITNUNA PROJECTS INC.

Title: CONTROLS SCHEMATIC CHLORINE FAN
Project: POTABLE WATER TREATMENT PLANT TALOYOAK
Drawing #: 1772-EL-101

Scale: NTS
Date: JUNE 28,2010
Sheet 1 of 1
Job#: 1772
Rev: A