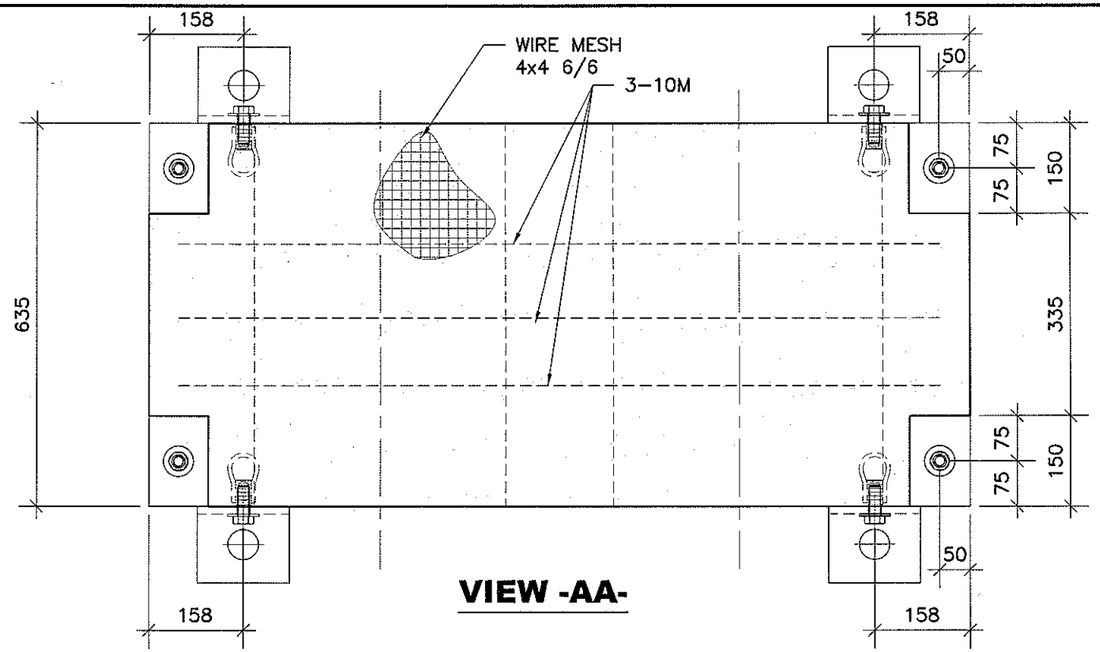

VIEW -AA-

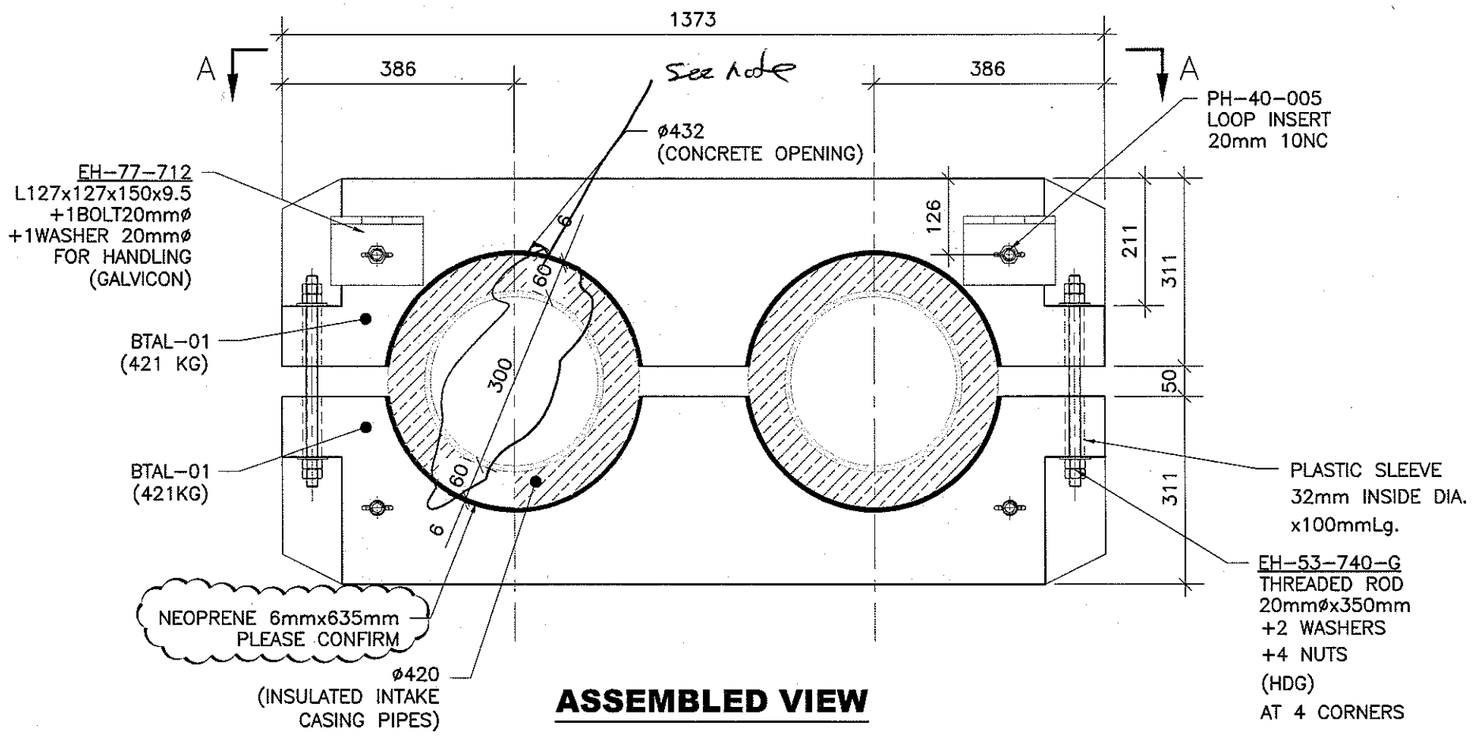

ASSEMBLED VIEW

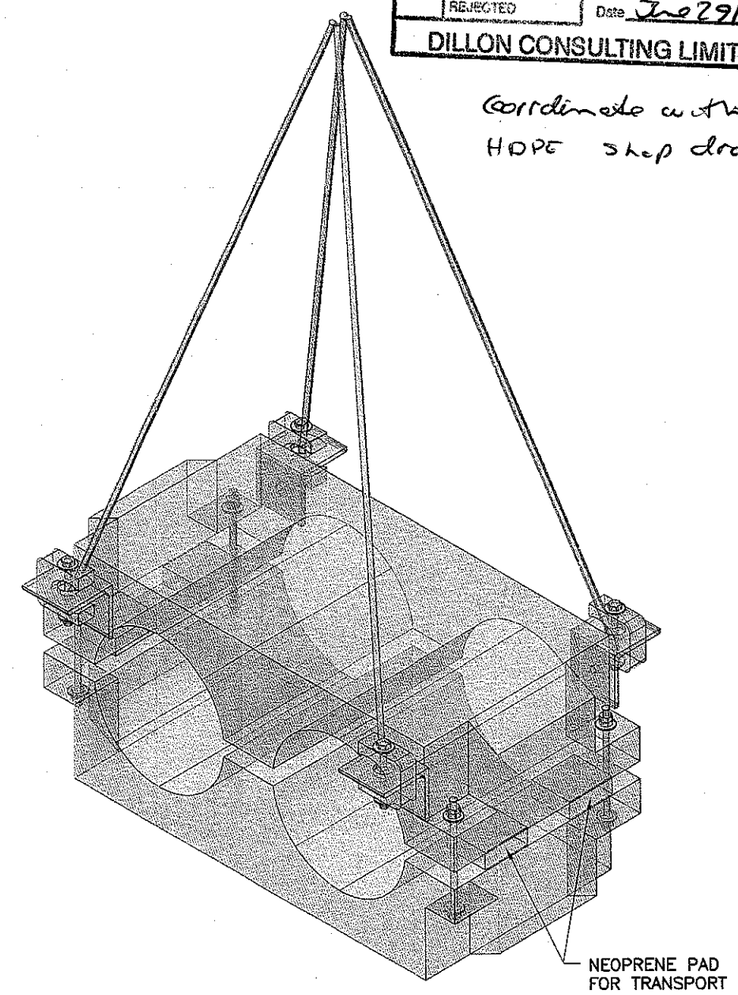

HANDLING DETAIL

SHOP DRAWING REVIEW

THIS DRAWING HAS BEEN REVIEWED FOR GENERAL CONFORMANCE WITH THE DESIGN CONCEPT ONLY. SUCH REVIEW SHALL NOT RELIEVE THE CONTRACTOR OF HIS RESPONSIBILITY FOR ERRORS OR OMISSIONS OR OF MEETING THE REQUIREMENTS OF THE CONTRACT DOCUMENTS. NO RESPONSIBILITY IS ASSUMED FOR CORRECTNESS OF DIMENSIONS OR DETAILS.

	NO COMMENT
	SEE COMMENTS
✓	AMEND & RESUBMIT
	REJECTED

Submission No. 78
Project No. 078107
By GS
Date June 29/10

DILLON CONSULTING LIMITED

Coordinate with HDPE shop drawing

armtec | groupe tremca
800 boul. Pierre-Tremblay
Saint-Jean-sur-Richelieu (Québec) J2X 4W8
Tél.: (450) 346-4481
Fax : (450) 346-7447
Courriel : prefab@tremca.com

DRAW BY: MB
CHECK BY: SM

REV.	FOR	DATES	DESCRIPTION	HARDWARE / PANNEL				WEIGTH Kg	m2 BRUT	REQ.	MK
0	MB	17-06-10	APPROBATION	QTE	TYPE	QTE	TYPE	843 Kg		8	BTAL-01

TITLE: BLOC DE LESTAGE TALOYOAK

PROJECT N° ARMTEC: C-10-7030

N° DRAWING: L-BTAL-01 | PAGE: 1/1 | REV. 0