NUNA EAST LTD.

EUREKA WATER AND SEWAGE TREATMENT CONTAINERIZED EQUIPMENT

H2FLOW PROJECT # Q-285-20-R3

OPERATING AND MAINTENANCE MANUAL

FEBRUARY 2026

H2FLOW EQUIPMENT INC.

www.h2flow.com







Table of Contents

Section 0: Emergency Procedures

Section 1: System Overview

- Section 1.1: Design Basis
- Section 1.2: Process Description
- Section 1.3: Scope of Supply
- Section 1.4: Control Narrative
- Section 1.5: HMI Controls O&M
- Section 1.6: Bypass wastewater treatment system

Section 2: Drawings

- Section 2.1: Process Flow Diagram (PFD)
- Section 2.2: Piping and Instrument Diagram (P&ID)Section 2.3: General Assembly Diagram (GAD)

Section 3: Equipment

- Section 3.1: Wastewater Screening
  - Section 3.1.1: Screw Screen
  - Section 3.1.2: Screen Gear Drive
  - Section 3.1.3: Screen Level Switch
  - Section 3.1.4: Screen Wash Water Line Solenoid
- Section 3.2: Screened Wastewater Equalization
  - Section 3.2.1: EQ Tank
  - Section 3.2.2: EQ Tank Level Sensor
  - Section 3.2.3: EQ Tank Level Switch
  - Section 3.2.4: EQ Tank Feed Pumps
  - Section 3.2.5: MBBR Inlet Flowmeter
  - Section 3.2.6: EQ Tank Blower
- Section 3.3: MBBR and Clarifier Package
  - Section 3.3.1: MBBR and Clarifier Tank
  - Section 3.3.2: Transfer and Treated Effluent Tank
  - Section 3.3.3: Treated Effluent Tank's Sump Pumps
  - Section 3.3.4: Level Switch
  - Section 3.3.5: MBBR Blowers

Section 3.3.6: DO Sensor

Section 3.3.7: pH Sensor

Section 3.3.8: MBBR Media

Section 3.4: Chemical Dosing for MBBR Package

Section 3.4.1: Defoamer & Carbon Source Dosing

Section 3.4.2: Urea & Alkalinity Dosing

Section 3.4.2.1: Plastic Tank

Section 3.4.2.2: Mixer and Motor

Section 3.4.2.3: Dosing Pump

Section 3.4.3: Chemical Dosing Guide

Section 3.4.4: Safety Data Sheets

Section 3.4.4.1: Industrial Defoamer

Section 3.4.4.2: Flocculation/Dewatering

Section 3.4.4.3: Reducing Agent for Biological Processes

Section 3.4.4.4: Urea

Section 3.5: Effluent Disinfection

Section 3.5.1: UV Feed Pumps

Section 3.5.2: UV Inlet Flowmeter

Section 3.5.3: UV System

Section 3.6: Sludge Handling

Section 3.6.1: Clarifier Sludge Pumps

Section 3.6.2: Sludge Holding Tank

Section 3.6.3: Sludge Holding Tank Transfer Pumps

Section 3.6.4: Sludge Dewatering System

Section 3.6.5: Polymer Addition

Section 3.6.6: Sludge Line Flowmeter

Section 3.6.7: Sludge Blower

Section 3.6.8: Sludge Tank Level Sensor

Section 3.6.9: Sludge Tank High Level Float

Section 3.6.10: Dewatering Filtrate AOD Pumps

Section 3.6.11: Dewatering System Level Switch

Section 3.7: Miscellaneous Equipment
Section 3.7.1: Air Compressor
Section 3.7.2: Water Heater
Section 3.7.2.1: Tank Water Heater
Section 3.7.2.2: Tankless Water Heater
Section 3.7.3: Space Heater
Section 3.7.3.1: Explosion Proof
Section 3.7.3.2: Non-explosion Proof
Section 3.7.4: Exhaust Fan
Section 3.7.4.1: Explosion Proof
Section 3.7.4.2: Non-explosion Proof
Section 3.7.5: Louver & Dampeners
Section 3.7.5.1: Explosion Proof
Section 3.7.5.2: Non-explosion Proof
Section 3.7.6: Pressure Gauge
Section 3.7.7: Back Flow Preventor
Section 3.7.8: Sink Pump
Section 3.7.9: Temperature Switch
Section 3.7.9.1: Explosion Proof
Section 3.7.9.2: Non-explosion Proof
Section 3.7.10: H2S & Methane Sensors
Section 3.7.11: Odor Controls Units
Section 3.7.12: Safety equipment
Section 4: Electrical Drawings
Section 4.1: Single Line Diagram
Section 4.2: Control Panel Schematic
Section 5: Hazardous Location Documentation
Section 5.1: Procedures and Warning Labels
Section 5.2: Stamped Drawings
Section 5.3: System Nameplates
Section 5.4: Components List
Section 5.5: Risk Assessment
Section 6: Recommended spare parts list
Section 7: Commissioning Plan

Section 0

Emergency Procedures

Generic Emergency Procedures

- In the event that the Biological Oxygen Demand (BOD), Total Suspended Solids (TSS), or Unionized Ammonia as Nitrogen exceed the designed inlet characteristics:
    - Check the history of the plant influent (This is generic statement)
        - If this is a one-time occurrence, no immediate system changes are necessary. There may be a temporary spike in the effluent, but the system will return to producing the designed treated effluent. It is important to note that the spike might occur as soon as plant hydraulic retention time or it would take up to 28 days after the system experiences the shock. This is plant-based scenario and cannot be predicted.
    - If the effluent levels continue to exceed the designed limits, keep the system running and conduct root cause analysis.
        - Check the activities of the site and chemicals added prior discharging to the system and notice any difference. Trace all the possible routes of inlet to the wastewater.
        - If the issue can be fixed or prevented upstream, then no modification to the system design are required. Fixing the upstream problem will result in recovering the system. Note the system may take few days/ weeks to recover, depending on the severity of the situation.
        - If the problem cannot be identified or resolved, notify H2Flow for further assistance.
- If Oil and grease contents are detected in the inlet:
    - Stop the leakage/ oil spill from entering the wastewater treatment plant immediately. Stop operating the plant immediately (keep the media in mixing mode manually).
        - Depending on the severity of the situation, the plant may be rendered ineffective and a full resupply is required. Notify H2Flow immediately for proper action. Discussion is required between all parties involved to see where wastewater can be diverted.
        - Conduct a root cause analysis following the same steps illustrated above.

- If effluent levels exceed the rated discharge limits (assuming the inlet values are within the limits):
    - Conduct another test of the effluent in a different lab as that might be an error. If the numbers are still outside the limits (We understand the logistic challenges of site and it needs to discussed with owner about their approval from concerned authority)
        - Check the wastewater characteristics before the inlet screen, after the screen, before the MBBR, before the clarifier and after the clarifier. Also check the amount of chemicals added. Usually, this could have been chemical overdose.
        - If no other issues detected, contact H2Flow for further assistance.
- In the event of a pump or blower failure:
    - Switch to the spare or replace out as required. Conduct the required maintenance.
    - Replenish the consumed spare parts.
- If an instrument fails:
    - Repair or replace it.
    - Restock the consumed spare parts.
- If any tanks leak, repair them immediately. Depending on the extent of damage, it may be necessary to drain the tank before starting repair work. During this time, the system may need to be shut down. All drainage should be directed to lagoon.
    - Notify H2Flow if MBBR tank leaks for proper action.
- Store a few barrels of neat polymer inside the container. Contact the chemical supplier to schedule polymer delivery.
- If the UV lamp fails:
    - Repair or replace it.
    - Replace the consumed spare parts.

- If the system needs to be shut down for a long period of time (more than a day or two), divert the wastewater to lagoon. Upon restarting the system, it will take 1- 12 weeks to regain biological functionality, depending on loading, flows, temperature etc. Contact H2Flow to confirm.
- If H2Flow control panel is out of service, the wastewater treatment cannot operate. We recommended to keep critical spare parts, such as fuses, relays, and overloads, for WWTP control panel in a safe place where can be reached out quickly.

Emergency scenario quick notes

1) PLC system has alarm for following conditions:
    a) High level conditions
    b) H2S sensor triggered
    c) CH4 (Methane) sensor triggered
    d) Pump failure conditions.
2) There is no dedicated emergency notifications or alarm. PLC will show alarm as it gets triggered and each alarm has low level to high level threshold.
3) All 4 containers have emergency exit lights.
4) There is no emergency power available for the wastewater system.
5) There is no spill management and spill response equipment included for this system. If there is site specific requirement than it needs to discuss with client.
6) There is emergency shower and eye wash station installed in container#3.
7) There is no option for reseeding as lagoon may be carrying wastewater and brine discharge too.
8) During wastewater plant operation if additional testing is needed than plant will be still operational and tweaking if needed will happen after results received from the lab.
9) In case of emergency whole wastewater plant is bypassed and all wastewater is getting discharged to the lagoon.

10) H2Flow Emergency phone number ➔ 1-888-575-8642 or 905-660-9775

11) In case of loss or heat inside the container, portable heater should be put inside PLC container.

12) In case of loss of PLC, we recommend to keep spare PLC onsite.

Note: please refer to following section "Operation and Maintenance Brief Overview" below to know how to maintain and what issues to look for in major equipment on daily, weekly, and monthly basis.

Procedure for Alarms

Sr.No.	TAG ID	Description	Action Item
1	LAH 01-08	EQ TANK (TK-01-13) HIGH LEVEL	IF THIS OCCURS THAN OPERATOR NEEDS TO GO INSIDE THE CONTAINER AND PERFORM BYPASS SCREEN SYSTEM. OPERATOR NEEDS TO CLOSE V01-19 AND V-01-20 AND OPEN V-01-18 VALVE .
2	LAH-02-03	SLUDGE TANK (TK-02-01) HIGH LEVEL	IF THIS ALARM OCCURS THAN SLUDGE FEED PUMP ARE ALREADY INTERLOCKED AND SLUDGE FEED PUMPS P-03-22 AND/OR P-03-23 WILL STOP AUTOMATICLLY. OPERATOR DOESN'T NEED TO INTERVENE.
3	LHH-03-14	TRANSFER TANK (TK-03-04) HIGH LEVEL	IF THIS ALARM OCCURS THAN MBBR FEED PUMPS ARE ALREADY INTERLOCKED AND MBBR FEED PUMPS P-01-10 AND/OR P-01-11 WILL STOP AUTOMATICLLY. OPERATOR DOESN'T NEED TO INTERVENE.
4	HAL-01-15	H2S SENSOR (AE/AIT015) HIGH LEVEL ALARM	STOP WORK IMMEDIATELY. DO NOT ATTEMPT TO LOCATE THE SOURCE. IF YOU CAN, HOLD YOUR BREATH TO MINIMIZE FURTHER INHALATION. OTHERWISE, TAKE A QUICK, SHALLOW BREATH. LEAVE THE AREA UPWIND AND UPHILL. DO NOT RUN. ACTIVATE EMERGENCY ALARM/CALL FOR HELP. WARN OTHERS.

			DO NOT RE-ENTER UNTIL PROPERLY VENTILATED, TESTED, AND DECLARED SAFE. MEDICAL ATTENTION (IF FEELING SYMPTOMS). REPORT DETAILS: PROVIDE A DETAILED ACCOUNT OF THE INCIDENT TO YOUR SUPERVISOR. THIS HELPS IN INVESTIGATION AND PREVENTING FUTURE OCCURRENCES. MONITOR CHECK: YOUR H_2S MONITOR WILL BE CHECKED AND/OR RECALIBRATED AFTER THE INCIDENT. • FOLLOW ALL SAFETY PROCEDURE BEFORE ENTRY. • MAKE SURE THAT THERE IS A CONTINUOUS MONITORING WHILE YOU'RE IN THE SPACE. • **ENSURE THE PLACE IS VENTILATED.**
5	HAL-01-015A	METHANE SENSOR (AE/AIT 01-015A) HIGH LEVEL ALARM	STOP WORK IMMEDIATELY. DO NOT ATTEMPT TO LOCATE THE SOURCE. DON'T USE ANY ELECTRONICS AND LEAVE THE CONTAINER IMMIDATELY. KEEP DOOR OPEN BUT DO SO FROM SAFE DISTANCE. MONITOR CHECK: YOUR METAHNE MONITOR WILL BE CHECKED AND/OR RECALIBRATED AFTER THE INCIDENT. • FOLLOW ALL SAFETY PROCEDURE BEFORE ENTRY. • MAKE SURE THAT THERE IS A CONTINUOUS MONITORING WHILE YOU'RE IN THE SPACE. • **ENSURE THE PLACE IS VENTILATED.**

6	HAL-03-11	H2S SENSOR HIGH (AE/AIT 03-11) LEVEL ALARM	STOP WORK IMMEDIATELY. DO NOT ATTEMPT TO LOCATE THE SOURCE. IF YOU CAN, HOLD YOUR BREATH TO MINIMIZE FURTHER INHALATION. OTHERWISE, TAKE A QUICK, SHALLOW BREATH. LEAVE THE AREA UPWIND AND UPHILL. DO NOT RUN. ACTIVATE EMERGENCY ALARM/CALL FOR HELP. WARN OTHERS. DO NOT RE-ENTER UNTIL PROPERLY VENTILATED, TESTED, AND DECLARED SAFE. MEDICAL ATTENTION (IF FEELING SYMPTOMS). REPORT DETAILS: PROVIDE A DETAILED ACCOUNT OF THE INCIDENT TO YOUR SUPERVISOR. THIS HELPS IN INVESTIGATION AND PREVENTING FUTURE OCCURRENCES. MONITOR CHECK: YOUR H_2S MONITOR WILL BE CHECKED AND/OR RECALIBRATED AFTER THE INCIDENT. • FOLLOW ALL SAFETY PROCEDURE BEFORE ENTRY. • MAKE SURE THAT THERE IS A CONTINUOUS MONITORING WHILE YOU'RE IN THE SPACE. • **ENSURE THE PLACE IS VENTILATED.**
7	HAL-03-011A	METHANE SENSOR (AE/AIT 03-011A) HIGH LEVEL ALARM	STOP WORK IMMEDIATELY. DO NOT ATTEMPT TO LOCATE THE SOURCE. DON'T USE ANY ELECTRONICS AND LEAVE THE CONTAINER IMMIDATELY. KEEP DOOR OPEN BUT DO SO FROM SAFE DISTANCE.

			MONITOR CHECK: YOUR METAHNE MONITOR WILL BE CHECKED AND/OR RECALIBRATED AFTER THE INCIDENT. • FOLLOW ALL SAFETY PROCEDURE BEFORE ENTRY. • MAKE SURE THAT THERE IS A CONTINUOUS MONITORING WHILE YOU'RE IN THE SPACE. • **ENSURE THE PLACE IS VENTILATED.**
8	YA-01-10	MBBR FEED PUMP A (P-01-10) FAULT	IF PUMP FAULT OCCURS THAN NEED TO FOLLOW PUMP MANUFACTURER'S TROUBLESHOOTING GUIDELINE.CHECK ALL MECHANICAL AND ELECTRICALCONNETIONS FOR VISUAL DAMAGE. TRY TROUBLESHOOTING , IF NOT RESOLVED THAN CONTACT H2FLOW FOR FURTHER GUIDELINE.
9	YA-01-11	MBBR FEED PUMP B (P-01-11) FAULT	IF PUMP FAULT OCCURS THAN NEED TO FOLLOW PUMP MANUFACTURER'S TROUBLESHOOTING GUIDELINE.CHECK ALL MECHANICAL AND ELECTRICALCONNETIONS FOR VISUAL DAMAGE. TRY TROUBLESHOOTING , IF NOT RESOLVED THAN CONTACT H2FLOW FOR FURTHER GUIDELINE.
10	YA-02-04	SLUDGE TRANSFER PUMP A (P-02-04) FAULT	IF PUMP FAULT OCCURS THAN NEED TO FOLLOW PUMP MANUFACTURER'S TROUBLESHOOTING GUIDELINE.CHECK ALL MECHANICAL AND ELECTRICALCONNETIONS FOR VISUAL DAMAGE. TRY TROUBLESHOOTING , IF NOT RESOLVED THAN CONTACT H2FLOW FOR FURTHER GUIDELINE.

11	YA-03-22	SLUDGE TRANSFER PUMP A (P-03-22) FAULT	IF PUMP FAULT OCCURS THAN NEED TO FOLLOW PUMP MANUFACTURER'S TROUBLESHOOTING GUIDELINE.CHECK ALL MECHANICAL AND ELECTRICALCONNETIONS FOR VISUAL DAMAGE. TRY TROUBLESHOOTING , IF NOT RESOLVED THAN CONTACT H2FLOW FOR FURTHER GUIDELINE.
12	YA-03-23	SLUDGE TRANSFER PUMP B (P-03-23) FAULT	IF PUMP FAULT OCCURS THAN NEED TO FOLLOW PUMP MANUFACTURER'S TROUBLESHOOTING GUIDELINE.CHECK ALL MECHANICAL AND ELECTRICALCONNETIONS FOR VISUAL DAMAGE. TRY TROUBLESHOOTING , IF NOT RESOLVED THAN CONTACT H2FLOW FOR FURTHER GUIDELINE.
13	YA-03-05	UV FEED PUMP A (P-03-05) FAULT	IF PUMP FAULT OCCURS THAN NEED TO FOLLOW PUMP MANUFACTURER'S TROUBLESHOOTING GUIDELINE.CHECK ALL MECHANICAL AND ELECTRICALCONNETIONS FOR VISUAL DAMAGE. TRY TROUBLESHOOTING , IF NOT RESOLVED THAN CONTACT H2FLOW FOR FURTHER GUIDELINE.
14	YA-03-06	UV FEED PUMP B (P-03-06) FAULT	IF PUMP FAULT OCCURS THAN NEED TO FOLLOW PUMP MANUFACTURER'S TROUBLESHOOTING GUIDELINE.CHECK ALL MECHANICAL AND ELECTRICALCONNETIONS FOR VISUAL DAMAGE. TRY TROUBLESHOOTING , IF NOT RESOLVED THAN CONTACT H2FLOW FOR FURTHER GUIDELINE.
15	UA-03-16	TREATED EFFLUENT TANK	IF PUMP FAULT OCCURS THAN NEED TO FOLLOW PUMP

		(TK-03-07) LOCAL PUMP PANEL (P-03-08 AND P-03-09)	MANUFACTURER'S TROUBLESHOOTING GUIDELINE.CHECK ALL MECHANICAL AND ELECTRICALCONNETIONS FOR VISUAL DAMAGE. TRY TROUBLESHOOTING , IF NOT RESOLVED THAN CONTACT H2FLOW FOR FURTHER GUIDELINE.

BYPASS OF WASTEWATER TREATENT SYSTEM

Reason for bypass

- Power Loss
- Prevent Damage to Equipment
    - High flows, toxic spills, or chemicals can harm pumps, pipes, tanks, and MBBR media.
    - Protect Biological Treatment
    - Toxic loads (e.g., strong disinfectants, solvents): kills the biofilm on MBBR carriers.
    - Extreme pH: disrupt microbes and reduce treatment performance.
    - Oil and Grease
    - Avoid System Overload
    - Heavy rain or sudden surges can exceed design capacity (overloading cause disturbance, and promotes microorganisms to leave the system).
- Perform Maintenance/ Repairs
- Damaged/ Clogged Piping
- Ensure Operator and Site Safety
    - Prevent unsafe working conditions during critical failures or hazardous events.

Summary of Bypass

- Always follow your facility's Standard Operating Procedures (SOPs) and approvals before any bypass.
- Record and report all bypass events as required.
- If needed, the wastewater treatment plant can be bypassed as follows (this is performed manually):
- Valves (V-01-19/20) are CLOSED, valve (V-01-18) is open ➔ bypass the raw wastewater *BEFORE* the screening.
    - If there is enough pressure to send it to the outfall ➔ valve (V-03-45) is CLOSED and valve (V-03-44) is open.
    - If there is insufficient pressure to send it to the outfall ➔ valve (V-03-44) is CLOSED and valve (V-03-45) is open.
- Valves (V-01-19/20) are OPEN, valve (V-01-37) is OPEN and valve (V-01-36) is CLOSED ➔ bypass the raw wastewater *AFTER* the screening.
    - If there is enough pressure to send it to the outfall ➔ valve (V-03-45) is CLOSED and valve (V-03-44) is open.
    - If there is insufficient pressure to send it to the outfall ➔ valve (V-03-44) is CLOSED and valve (V-03-45) is open.

Section 1

System Overview

Section 1.1

Design Basis

Design Basis

The following characteristic for the inlet wastewater is assumed as the basis of design.

DESIGN PARAMETER	UNITS	VALUE
Design Wastewater Flow	m^3/day	9.45
Maximum Design Wastewater Flow	m^3/day	13.5
Peak Design Wastewater (max day)	m^3/day	18.9
Minimum Design Wastewater Flow	m^3/day	1.8
Winter Influent Design Temperature	°C	7
Summer Influent Design Temperature	°C	20
Peak Hour Flow	m^3/day	28

Table 1: Design Flowrate

PARAMETER	UNITS	INFLUENT	EFFLUENT
BOD_5	mg/L	320	20
Total Suspended Solids	mg/L	320	20
Total Coliform		10,000,000	1,500 per 100 mL
Fecal Coliform		1,700,000	200 per 100 mL
pH		6-8	6-8.5
NH_3	mg/L as N	35	-
TP	mg/L	10	10
Unionized Ammonia as Nitrogen	mg/L as N		1.25

Table 2: Influent and Effluent Quality

NOTE:

1. H2Flow assumes that the wastewater is readily biodegradable and does not contain any compounds that are inhibitory to the biological activity of the microorganisms required for the biological reduction of contaminants.

Section 1.2

Process Description

Process Description

Customer: PWGSC
Project: Eureka Wastewater
Proposal: Q-285-20
Original Date: November 30, 2020
Modified for O&M Manual: July 13, 2022

System Overview

The system provided as per the RFP is in compliance with the specifications provided.

The system is completely designed to be installed in the Artic climate conditions. All the equipment will be factory installed in four (4) ISO 20' long high cube container with insulation and heaters to maintain a 20°C interior temperature. Field interconnections will be required by the installing contractor and all required materials will be provided by H2Flow.

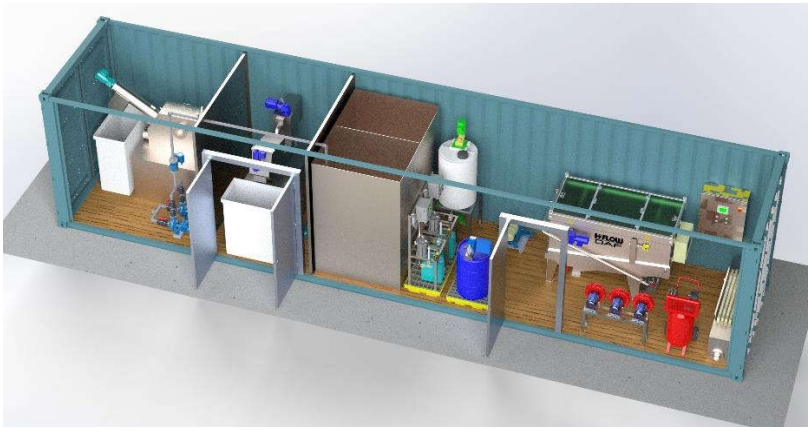

Example of a MBBR WWTP Containerized System



Example of a MBBR Containerized System field installation

Process Description

The major process stages involved in the H2Flow proposed treatment system are as follows:

- Screen with screenings bagging system
- Equalization Tank – covered and aerated
- MBBR Tanks with complete internals – covered and aerated
- Regenerative Blowers (providing air to the Equalization tank, MBBR Tank and Sludge Holding Tank)
- Clarifier
- UV Disinfection Unit – Duty/Standby
- Effluent tank complete with effluent pump
- Sludge Holding tank – covered and aerated
- Sludge dewatering unit with two (2) bagging system
- Odor control – Activated carbon filter complete with fan to draw air from all process tanks, insulated and heated ducts
- Carbon Feed System

The treatment process provided is based on the specified MBBR technology and it is a single train with two stages for BOD removal and Ammonia removal followed by a clarifier for solid removal and a UV disinfection.

Moving Bed BioReactor Description

The Moving Bed Bioreactor (MBBR) is a flow-through, fixed-film biological process. It involves a reactor containing polyethylene carriers (media) where microorganisms attach and colonize, taking advantage of the biofilm principle. The media design provides a high surface area for biofilm to grow. The high concentration of microorganisms permits rapid oxidization/degradation of organic and inorganic substances in the wastewater within a small footprint.

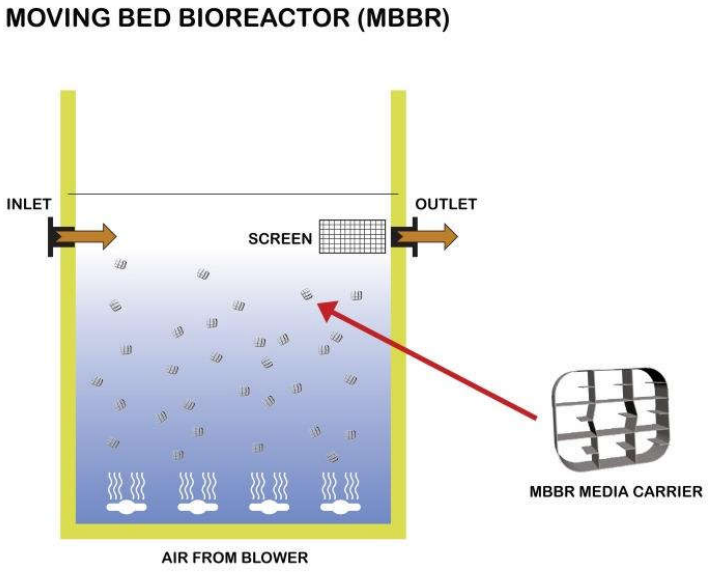

Figure 1: MBBR Illustration

The media, which are slightly less dense (0.95SG) than water, typically occupy a 50% fill ratio to reactor volume and are easily suspended by a forced-air system or other mixing methods. The reactor is considered 'complete mix' with no dead spots, giving the media sufficient contact time with all the containments in the wastewater, improving the reaction speeds and the overall system efficiency.

The MBBR process combines the advantages of activated sludge (high efficiency) and the trickling filter (low footprint) systems without the disadvantages of complex operations, high operation costs or poor mixing. It is also valuable to note that the MBBR is the most documented wastewater treatment fixed film process, with 50+ technical publications and presentations.

The MBBR process is a self-regulating system that requires minimal operator attention and has been utilized in over 500 installations worldwide. One of the most important considerations of the MBBR process is also footprint, which can be up to 4 times smaller when compared to other types of treatment processes due to the high surface area of the media.

Section 1.3

Scope of Supply

H2FLOW EQUIPMENT INC.

Project Name:	**Eureka STP-Containerized MBBR**
Subject:	**Major Equipment List**
Date:	**2022-07-13**
H2Flow Q No.:	**Q-285-20**

No.	P&ID Page No.	P&ID Tag No.	Equipment & Instrument Description	Make	Model	Equipment & Instrument Parameter
1	1	SCR-01-01 SCR-01-02	Screw screen Removing solids from incoming raw sewage	H2Flow	MCB-200	**Unit** SS Box Height: 815 mm SS Box Width: 300 mm SS Box Length: 1000 mm Discharge Height: 920 mm Screw Length: 1900 mm Screen Opening: 3 mm Inclination 45o Hydraulic Throughput: upto 15m3/hr Screen Rotation Speed: 10 RPM **WEG Motor** Motor: 0.25 kW Enclosure: Class 1 Division 1 (TEFC-XP) Voltage: 575 Volts, 3 Phase, 60 Hz **NORD Gear Reducer** Model: SK1SI50-IEC71-71S/4
2	1	LE-01-04 LE-01-05	Screen Level Switch Measuring low and high level in the screw screen tank	Ktech Industrial Product Inc.	FS401E-2	Maximum Switching Voltage: 120 V Maximum Switching Current: 1 A Maximum Switching Power: 100 V Class 1 Division 1, Groups B,C,D Electrical Connection 1/2" NPT Process Connection 1.5" NPT Switch A is 16" from the top Switch B is 23" from the top
3	1	TK-01-13	EQ Tank Collecting screen water before pumping in to MBBR Tank	H2Flow	Custom Transfer Tank	Material of Construction: SS 316 Length: 78" Height: 49" Width: 78"
4	1	LE-01-09	EQ Tank Level Sensor Monitoring High-High, High, Low, and Low-Low levels in the EQ Tank	Endress + Hauser	Waterpilot FMX21 FMX21-CE111HGF15A+PR	Approval: CE CSA C/US IS Cl.I Div.1 Gr.A-D, Ex ia, zone 1 Output: 1 4-20mA Probe Tube: 1 316L, d=22mm/0.87in Sensor Range: 1H 1bar/100kPa/15psi gauge, 10mH2O/33ftH2O/400inH2O Reference Accuracy: G Standard Calibration; Unit: F Sensor range; psi Probe Connection: 15 5 m ..... m cable, shortable, PE Seal: A FKM Accessory Enclosed: PR Cable-mounting-screw NPT1-1/2, 304
5	1	LS-01-08	EQ Tank Level Switch Monitoring High-High Level	Xylem Water Solutions Global	ENM 10	Classification: Class 1 Division 1 Cable: 20 m Power Supply: 24 VDC, 10mA min., 6 A max.
6	1	P-01-10 P-01-11	MBBR Feed Pumps Transferring screen wastewater from EQ Tank to MBBR	Netzsch	NM021BY01L06B	Flowrate: 0.8 m3/hr Differential Pressure: 4 bar Suction Pressure: Flooded Discharge Pressure: 4 bar Speed: 300 RPM Motor: TECO Westinghouse Motor HP: 1
7	1	FIT-01-12	MBBR Inlet Flowmeter Measuring flowrate from EQ Tank to MBBR	Endress + Hauser	Promag P 500, 5P5B25, DN25 1" 5P5B25-CDDBAAAAFBLL2DEA1K0AA1+PC	Approval; Transmitter; Sensor: CSA C/US; Cl.I,II,III Div.1, XP; Cl.I Cl.II,III Div.1, Gr.A-G Power Supply: 24VDC Output; Input 1: 4-20mA HART Display; Operation: 4-line illum.; touch control Integrated ISEM Electronic: Transmitter Transmitter Housing: Cast, stainless Sensor Junction Housing: Cast, stainless Cable, Sensor Connection: 10m/30ft coil and signal cable Electrical Connection: Thread NPT1/2 Liner: E PTFE Process Connection: Cl.150, carbon steel, flange ASME B16.5 Electrodes: 1.4435/316L Calibration Flow: 0.5% Device Model:1 1 Accessory Enclosed: Pipe mounting kit
8	4	BL-04-02	EQ Tank Blowers Provide Compressed Air to EQ Tank for mixing	FPZ Inc.	SCL R20-MD-1.5-3-575	1.5 hp-575-3 IE3 regenerative blower Unit capable of 41 cfm at open air flow 1.25" npt inlet and outlet connections 10.3 Inches Hg Max vacuum 161 Inches H2O Max pressure
9	3	MBBR-03-01 MBBR-03-02 CLR-03-03	MBBR Tanks and Clarifier Provided the media and environment to microorganism to break the contaminants in the screen water. Then clarifier helps to settle down the accumulated contaminants.	H2Flow	Custom MBBR and Clarifier Tank Combo	Material of Construction: SS 316 Length: 114" Height: 67" Width: 78"
10	3	TK-03-04 TK-03-06	Transfer Tank and Treated Effluent Tank Collecting transferring clarified wastewater	H2Flow	Custom Transfer and Treated Effluent Tank Combo	Material of Construction: SS 316 Length: 66" Height: 59" Width: 35"
11	3	P-03-08 P-03-09	Treated Effluent Tank Transfer Pumps Transferring overflow/bypass water to outflow	Liberty Pumps	XLSG205M	Power: 2 HP, Single Stage Rating: Class 1 Div. 1, Groups C&D Voltage: 575 V Full Load: 5 A Discharge: 1.25"
12	3	LS-03-14 to LS-03-17 & LS-03-18 to LS-03-21	Transfer Tank and Treated Effluent Tank Level Switch Monitoring High-High, High, Low, and Low-Low levels in these tanks	Ktech Industrial Product Inc.	FS401E-4	Maximum Switching Voltage: 120 V Maximum Switching Current: 1 A Maximum Switching Power: 100 V Class 1 Division 1, Groups B,C,D Electrical Connection 1/2" NPT Process Connection 1.5" NPT Switch A is 16" from the top Switch B is 23" from the top
13	3	BL-04-03 BL-04-04	MBBR Blowers Provide Compressed Air to MBBR	FPZ Inc.	SCL K04-MS-3-3-575 NP	3 hp-575-60-3 regenerative blower Unit is capable of 98 cfm at open air flow 1.5" npt inlet and outlet connections Die-cast aluminum finish 7.4 Inches Hg. Max vacuum 120 Inches H2O Max pressure
14	3	AIT-03-57 AIT-03-58	DO and pH Sensors Measuring dissolved oxygen and pH of MBBR #2	Rosemount / Emerson	Transmitter: 5081-P for pH/ORP and 5081-A for dissolved oxygen OD Sensor: Rosemount 499ADO pH Sensor: Rosemount 3900/3900VP	Housing: Cast aluminum with epoxy coating Conduit: 3/4" NPT Display: Two-line LCD Power Supply: 12 - 30 VDC Output: Two-wire, 4-20 mA output, HART DO Sensor: 0-20 ppm measuring range pH Sensor: 0-14

15	5 & 6	MP-05-06 MP-06-08 MP-06-09 MP-06-07	Chemical Dosing for MBBR Urea Dosing (MP-06-08) Defoamer Dosing (MP-06-09) Carbon Source Dosing (MP-06-07) Alkalinity (MP-05-06)	Grundfos	DDA 7.5-16	DDA 7.5-16 anti foam dosing pump Turn-down ratio (setting range): 1:3000 Max flow: 7.5 l/h Max pressure: 16 bar Min. dosing capacity: 0.0025 l/h
16	5 & 6	TK-05-08 TK-06-12	Urea and Alkalinity Day Tank Storing / Preparation of Urea and Alkalinity Source	ACO	OT-60-80139	Volume: 60 IG / 72 USG Overall Height: 50" Diameter: 22" HDPE 2.2 SG
17	5 & 6	MX-05-07 MX-06-07	Mixer for Urea and Alkalinity Day Tank Mixing powder form urea and alkalinity sources in the tank	Dynamix	DMX-5505J-1	Drive: Electric Motor 0.5 HP @ 1725 rpm 3/60/110-220V TEFC, Worm Gear Reducer Right Angle 11 to 1 Ratio @ 159 rpm 1" Diameter shaft clamp mount (aluminum) Shaft: 1" dia. 41" long (316SS) Custom: Custom Right angle gearbox, 88RPM Top Impeller: 9" diameter, Dynaflow Blade (316SS) - Spacing 14' Bottom Impeller: 9" diameter, Dynaflow Blade (316SS) - Off Bottom 9"
18	3	Media in MBBR-03-01 MBBR-03-02	Media Providing support for micro-organism growth	Biowater	BWT-X	Width/Height : 14.5 mm (±0.5 mm) Length : 8.2 mm (+0.2/-0.2mm) Outer Perimeter : 55 mm Inner Perimeter : 197 mm Wall Thickness : 0.35 (±0.1 mm) Material : Polyethylene, High-Density (HDPE). Colour : Natural Specific Weight : Raw Material 0.96 (± 0.02) kg/L Extruded Material 0.95 (± 0.02) kg/L
19	3	P-03-05 P-03-06	UV Feed Pumps Transferring clarified wastewater from transfer tank to UV unit	Netzsch	NM021BY01L06B	Flowrate: 0.8 m3/hr Differential Pressure: 4 bar Suction Pressure: Flooded Discharge Pressure: 4 bar Speed: 300 RPM Motor: TECO Westinghouse Motor HP: 1
20	5	FIT-05-03	UV Inlet Flowmeter Measuring flowrate from transfer tank to UV unit	IFM	SM6601	Number of Inputs: 2 Number of Outputs: 1 Measuring Range: 0.03-6.6 GPM Process Connection: 0.5" NPT DN15
21	5	UVT-05-04 & UVT-05-05	UV System Disinfecting the effluent before pumps to treated effluent tank	UV Pure	Hallett 500W	Flow: Up to 40 USGPM UV Dose: Min. 30 ml/cm^2 UV Transmittance (UVT): 50-95% UVT Voltage: 120 VAC, 60 Hz Power Consumption: 196 W UV Lamps: Dual LPHO - air mounted Dimensions (HxWxD): 36.5 x 9.6 x 8.6 in (926 x 244 x 218 mm) Inlet / Outlet: 1" MNPT SS
22	3	P-03-22 & P-03-23	Clarifier Sludge Pump Transferring sludge from clarifier to sludge holding tank	Netzsch	NM021BY01L06B	Flowrate: 0.8 m3/hr Differential Pressure: 4 bar Suction Pressure: Flooded Discharge Pressure: 4 bar Speed: 300 RPM Motor: TECO Westinghouse Motor HP: 1
23	2	TK-02-01	Sludge Holding Tank Storing sludge that comes from clarifier	H2Flow	Custom Sludge Holding Tank	Material of Construction: SS 316 Length: 78" Height: 82" Width: 39"
24	2	P-02-04 P-02-05	Sludge Transfer Pump Transferring sludge from sludge holding tank to sludge dewatering system	Netzsch	NM021BY01L06B	Flowrate: 0.8 m3/hr Differential Pressure: 4 bar Suction Pressure: Flooded Discharge Pressure: 4 bar Speed: 300 RPM Motor: TECO Westinghouse Motor HP: 1
25	2	SCR-02-06	Dewatering System Remove the excess water from sludge (coming from DAF)	Teknofanghi	Teknofanghi 02BM	Height: 1,494mm Width: 520mm Length: 1,146mm Hydraulic flow: 1-2 m^3/h Dry solids: 0.5-4% Dry solids: 10-20 kg/day
26	6	MP-06-01	Polymer Dosing Dosing polymer into feed line of sludge dewatering system	Excell Feeder	6012PS-SX	Neat polymer flow range is 0.1 to 1.9 LPH (0.6 to 12 GPD) Dilution water flow range is 25 to 230 LPH (6 to 60 GPH) A solenoid operated valve turns the water flow on - off An H-O-A switch allows local or remote Start-Stop control
27	2	FIT-02-12	Sludge line flowmeter Measuring flowrate of sludge from sludge holding tank to sludge dewatering system	Endress + Hauser	Promag P 500, 5P5B25, DN25 1" 5P5B25-CDDBAAAAFBLL2DEA1K0AA1+PC	Approval; Transmitter; Sensor: CSA C/US; Cl.I,II,III Div.1, XP; Cl.I Cl.II,III Div.1, Gr.A-G Power Supply: 24VDC Output; Input 1: 4-20mA HART Display; Operation: 4-line illum.; touch control Integrated ISEM Electronic: Transmitter Transmitter Housing: Cast, stainless Sensor Junction Housing: Cast, stainless Cable, Sensor Connection: 10m/30ft coil and signal cable Electrical Connection: Thread NPT1/2 Liner: E PTFE Process Connection: Cl.150, carbon steel, flange ASME B16.5 Electrodes: 1.4435/316L Calibration Flow: 0.5% Device Model:1 1 Accessory Enclosed: Pipe mounting kit
28	4	BL-04-01	Sludge Holding Tank Blower Provide Compressed Air to Sludge Holding Tank for mixing	FPZ Inc.	SCL R20-MD-1.5-3-575	1.5 hp-575-3 IE3 regenerative blower Unit capable of 41 cfm at open air flow 1.25" npt inlet and outlet connections 10.3 Inches Hg Max vacuum 161 Inches H2O Max pressure
29	2	LE-02-02	Sludge Holding Tank Level Sensor Monitoring High-High, High, Low, and Low-Low levels in the Sludge Holding Tank	Endress + Hauser	Waterpilot FMX21 FMX21-CE111HGF15A+PR	Approval: CE CSA C/US IS Cl.I Div.1 Gr.A-D, Ex ia, zone 1 Output: 1 4-20mA Probe Tube: 1 316L, d=22mm/0.87in Sensor Range: 1H 1bar/100kPa/15psi gauge, 10mH2O/33ftH2O/400inH2O Reference Accuracy: G Standard Calibration; Unit: F Sensor range; psi Probe Connection: 15 5 m ..... m cable, shortable, PE Seal: A FKM Accessory Enclosed: PR Cable-mounting-screw NPT1-1/2, 304
30	2	LS-02-03	Sludge Holding Tank Level Switch Monitoring High-High Level	Xylem Water Solutions Global	ENM 10	Classification: Class 1 Division 1 Cable: 20 m Power Supply: 24 VDC, 10mA min., 6 A max.
31	2	P-02-07 P-02-08	Dewatering Filtrate AOD Pumps Transferring filtrate from dewatering system to EQ Tank	Ingersoll Rand	PD05P-ARS-PAA-B	Center Section Material: Polypropylene Fluid Connection: 1/2" - 14 NPTF - 1 Fluid Cap & Manifold Material: Polypropylene Hardware: SS Seal: Polypropylene Ball and Diaphragm Material: Santoprene
32	2	LS-02-09	Dewatering System's Level Switch Monitoring high level in the dewatering system filtrate tank	Ktech Industrial Product Inc.	SM4001-CXEP	Construction: 316 SS 0.66" diameter stainless steel float 1/2" NPT bushing Explosion proof junction box Rating: Class 1 Div. 1

33	4	AC-04-05	Compressor Air compressor for DAF pneumatic panel	Craftsman	CMEC6150 6 Gallon Portable Air Compressor	Air Tank Capacity: 6 gal. Air Pressure: 150 psi max. Air Delivery: 2.6 SCFM @ 90 psig Tested per ANSI S12.6 (S3.19) Input: 120 V, AC only, 60 Hz, 15 Amps Duty Cycle: 5 minutes On/5 minutes Off
34	7	P-07-03	Dewatering System Transfer Pump Transferring dewatering system effluent water to septic tank	Liberty Pumps	Sink Pump Model 404	1/3 hp Residential 120V, 1 phase 25 GPM @ 10' head
35	3	OC-03-12 & OC-03-13	Odour Control Unit Removing odour from C1 and C2	Continental Carbon Group	VSPE-200-T	Air Capacity: 100-200 CFM Carbon capacity: 4.9 ft3 Bed Depth: 2.4' Blower HP: 1/2 Power: 120 V
36	1 & 3	AE/AIT-01-15 AE/AIT-01-15A AE/AIT-03-11 AE/AIT-03-11A	H2S and Methane Transmitter / Sensors Monitoring H2S and Methane gas concentration in containers 1 & 2	Honeywell	Methane Transmitter & Sensor Combo Model: XNX-AM SE-NNIV1 H2S Transmitter & Sensor (attached) Model: XNX-AM- SE-NNNNN + XNXSH1SS	Voltage: 24 VDC, relay output Rating Class 1 Div. 1 Methane Range: 0-5% Vol and H2S 0-15 ppm

Scope of Supply

The package treatment plant will have a max peak design flow of 18.9 m^3/day of sanitary wastewater which will include all necessary components, reactors, clarifier internal piping, electrical hardware, transformer, office furniture and items of equipment as indicated in this proposal.

Qty Four (4) 20'HCN – 20' x 8' x 9'6" High Cube Containers:

- Container 1
  - Fitted with the screens, equalization tank, MBBR Feed pump, Sludge Holding Tank, Sludge dewatering units and odor control system.
  - Classification – Class 1 Div. 1
- Container 2
  - Fitted with MBBR tanks and treated effluent tank
  - Classification – Class 1 Div. 1
- Container 3
  - Aeration blowers, UV disinfection units, Polymer makedown unit, Carbon feed system, dosing pumps, control panels, transformer, Main breaker panel.
  - Classification – Non-hazardous
- Container 4
  - Sink, office desk, shelf and hot water tank
  - Classification – Non-hazardous.

Each container will comprise of the following:

- One (1) Man door freezer – 3'x 7'
  - Panic Bar and hardware
  - Door panel 24 ga with white stucco embossed
  - Heavy duty hinges
  - Door Closer
  - Heated Weather strip gasket
- One (1) Lot of opening with 8"HSS framing
- Interior wall
  - Formed Studs
  - 5"Polyurethane closed cell 2 lbs density
  - R value: 35
  - Finishes – ½"Nu-Fiber panels with Stainless Steel screws and White Vinyl Trim
- Interior ceiling
  - Formed Studs
  - 5"Polyurethane closed cell 2 lbs density
  - R value: 35
  - Finishes – ½"Nu-Fiber panels with Stainless Steel screws and White Vinyl Trim
- Floor
  - 6 mm thick Alum Checker plate with seams fully welded and leak proof with a 4"return
  - One (1) floor drain
- Bottom insulation

  - 5”Polyurethane closed cell 2 lbs density
  - R value: 35
- Exterior Paint
  - Anti-corrosive Zinc primer
  - Epoxy primer Base Coat
  - Polyurethane Top Coat
- Leak Proof Assembly and accessories
  - Angle on top rail for ridge cap
  - Neoprene gasket between containers
  - Join and seal two containers at Top rails
- Electrical
  - LED Lighting suitable for location installed
  - Light switches
  - Emergency Lighting
  - Exterior lights with photosensor
- HVAC
  - 3 kW ceiling mounted with integrated thermostat – 575V/3/60Hz
  - Temperature sensor
  - Fresh air intake louvre
  - Exhaust fan.
- Step down transformer 600V-120V/208V, 3 phase transformer.
- Main breaker panel

Qty Two (2) Screw Screen (duty/standby), described by the following;

- Capacity: 28 m^3/d (each screen)
- Gear drive motor: 0.55 kW, 575V/3/60Hz - 60Hz – Class 1 Div. 1.
- Perforated screen: 3 mm
- Material of constructions: SS 316
- Local control station with local/remote and emergency stop

Qty. One (1) Eq tank in stainless steel 316 construction, described as

- Nominal volume: 4 m^3
- Complete with:
  - One (1) aeration grid in Stainless Steel complete with coarse bubble diffusers.
  - Cover with heat traced and insulated vent to the exterior and inspection hatch
  - One (1) Air exhaust connection to odor control unit.
  - One (1) regenerative blower complete with intake filter, discharge silencer and pressure safety relief valve
  - Four (4) level Float switches
  - One (1) lot of flanged nozzles

Qty. Two (2) Bioreactor Feed pumps, 0.78 m^3/h (1 duty + 1 standby) with ½ HP, 575V/3/60Hz – Class 1 Div. 1.

Qty. One (1) Flowmeter – Type: Electromagnetic with local display

Qty. Two (2) Bioreactor tanks in stainless steel 316 construction and covered, total dimensions of 2.2 m L x 1.5 m W x 2.1 m H, providing an effective volume 5 m^3 which are factory assembled complete with internals packages which includes the following:

- Two (2) complete site specific, engineered diffused aeration systems in 316 stainless steel including headers and lateral piping, with all supports for the aeration grid systems, manifolds and drop pipes internal to each of the basins will be supplied, where the termination point for the aeration system drop pipe will be a flanged connection at the tank wall height, where materials of construction are schedule 5 and schedule 10 316L stainless steel piping, and where all flanges will be 150 lb. ANSI style
- One (1) set of biofilm carrier retention sieve assemblies, where sieve assemblies will be designed at a peak instantaneous flow, where sieve assemblies will be fitted with 150-lb ANSI flanges, and which will be of 304L stainless steel construction
- One (1) One lot of biofilm carriers, which can be described by the following:
  - Specific surface area of BWT-X media: 650 m^2/m^3 of biofilm carriers
  - Media Volume : 2.8 m^3
  - Total fixed film area: 1,820 m^2
- Two (2) High Level Float Switch.
- One (1) Dissolved Oxygen sensor with integrated temperature sensor.
- One (1) pH sensor
- Cover with heat traced and insulated vent to the exterior and inspection hatch
- One (1) Air exhaust connection to odor control unit.

Qty Two (2) Regenerative Blowers, (1 duty+ 1 standby), 2Hp, 575V/3/60Hz complete with intake filter, discharge silencer and pressure safety relief valve

Qty. One (1) Carbon Feed system

- Carbon solution feed tank of 75 litres minimum
- One (1) top mount mixer
- One (1) Peristaltic feed pump

Qty. One (1) Clarifier fabricated in Stainless Steel 316 with cover and dimensions 1.5 m L x 0.8 m W x 2.1 m H complete with 60°cone bottom, inlet baffle and adjustable effluent weir.

Qty. Two (2) Sludge Pumps, ½ Hp, 575V/3/60Hz to draw sludge from the clarifier to the sludge holding tank fabricated in Stainless steel.

Qty. Two (2) UV Disinfection Unit

- Operation - Duty/Standby
- Each unit is complete with
  - Dual amalgam air mounted lamps
  - Quartz sleeve
  - Quartz sleeve built-in automatic mechanical wiper
  - Built-in Purge vale
  - Built-in forced air cooling
  - UV Sensor to monitor lamp intensity
  - LCD color interface with alarm indicator light
  - Built-in dry contacts, remote start/stop and Onboard diagnostics.
  - Monitoring System requires 120V, single phase, 2 wire plus ground, 5 amp power supply, 60 Hz

Qty. One (1) Treated Effluent Tank

- Nominal volume: 2 m^3
- Complete with:
  - Cover with heat traced and insulated vent to the exterior and inspection hatch
  - Four (4) level Float switches
  - One (1) lot of flanged nozzles
  - Two (2) Effluent centrifugal pump(duty/standby), each with a capacity of 40 m^3/d

Qty. One (1) Sludge Holding tank in stainless steel 316 construction, described as

- Nominal volume: 2.5 m^3
- Complete with:
  - One (1) aeration grid in Stainless Steel complete with coarse bubble diffusers.
  - Cover with heat traced and insulated vent to the exterior and inspection hatch
  - One (1) Air exhaust connection to odor control unit.
  - One (1) regenerative blower complete with intake filter, discharge silencer and pressure safety relief valve
  - Four (4) level Float switches
  - One (1) Manual decant of supernatant to Equalization tank.
  - One (1) lot of flanged nozzles

Qty. Two (2) Sludge Dewatering Feed Pump

- Capacity: 0.5 m^3/h

Qty. One (1) Sludge dewatering/bagging system comprising of:

- Stainless steel 304 material
- Dewatering with two bags, closed on three sides.
- One (1) Open top tank with two gasketed throats to suspend the bags and one 2"overflow
- Two (2) Bags clamping, allowing adjustable and rapid sealing
- One (1) Support grid for the bags
- One (1) Filtrate collection tank with sloped bottom
- Two (2) Filtrate pumps transfer to Equalization tank
- One (1) Frontal door set
- One (1) Bag trolley
- One (1) Automatic wire-twister
- One (1) Bundle of 2000 wires
- Two (2) Packet of 100 dewatering bags.
- One (1) Basket to contain bags expansion and to assist the bag removal.

Qty. One (1) Polymer make down system

- Carbon solution feed tank of 75 litres minimum
- One (1) top mount mixer
- One (1) Peristaltic polymer feed pump

Qty. Two (2) Activated Carbon Odor control unit

- One (1) common for Equalization tank and Sludge Holding tank located in Container No. 1
- One (1) for MBBR reactors located in Container No. 2
- Each contain 50 Lbs of Activated Carbon
- Vessel dimensions: 17 inch x 22 inch high.

Qty. One (1) Lot Piping and Valves

- Piping are to be Stainless Steel 304
- Supports are to be Stainless Steel 304
- Valves are to be Stainless Steel 304

Qty. One (1) Lot Electrical cabling

- Cables are to be Teck 90 type
- Cables placed in cable trays in Stainless Steel 304

Qty. One (1) Lot of office equipment described by the following:

- Two (2) Portable eyewash stations with two (2) replaceable reservoirs
- One (1) Office desk with shelf for manuals and data sheets: 0.6 m x 1.2 m
- One (1) Book Shelf Cabinet: 0.3 m deep x 1 m wide x 1.2 m high
- One (1) 30 L Hot water tank

- One (1) Stainless Steel sink and table with hot/cold tap
- One (1) Lot of sampling equipment
    - Four (4) 1 litre plastic graduated cylinders
    - One (1) Extendable pole with bottle holder
    - Twelve (12) Tempered glass beaker 250 mL
    - One (1) Handheld portable dissolved Oxygen meter complete with five (5) replacement membranes
  - Tools for Class 1 Zone 1
    - One (1) Set of wrenches, pliers and screwdrivers
    - One (1) Electric drill/screwdriver

Section 1.4

Control Narrative

Contents

CONTROL NARRATIVE 2

Control Description: 2

1. HEADWORKS – SCREENING, EQUALIZATION & FEED TRANSFER 4

2. BIOLOGICAL TREATMENT & SECONDARY CLARIFICATION– MBBR, CLARIFIER, CHEMICAL DOSING AND BLOWERS 8

3. EFFLUENT TRANSFER AND UV DISINFECTION 12

4. SLUDGE HANDLING SYSTEM 15

5. AUXILLARY EQUIPMENT – ODOUR CONTROL SYSTEM, METHANE, H2S DETECTOR, TEMPERATURE DETECTOR. 18

6. EQUIPMENT I/O LIST 21

CONTROL NARRATIVE

H2Flow has designed a wastewater treatment plant (WWTP) for Eureka STP to the meet the defined discharge performance objectives.

The major process stages involved in the H2Flow proposed treatment system are as follows:

- Screening
- Flow Equalization Tank
- Process Feed Pump
- Biological Treatment – MBBR
- Secondary Clarification in Clarifier
- UV Disinfection
- Sludge Storage and dewatering
- Effluent Transfer Tank and pumps

Control Description:

The raw wastewater from the lift station (out of scope of H2Flow) is pumped to the screw screens in Container #1, one duty (SCR-01-01) and one standby (SCR-01-02). Screened wastewater is discharged by gravity to Equalization tank (TK-01-13). Two blowers (BLR-04-01 and BLR-04-02), operating as duty / standby will be providing air to the EQ tank and Sludge tank (TK-01-01) through the aeration grids. The equalized wastewater will be fed to the MBBR tank (MBBR-03-01) by two progress cavity type MBBR Feed pumps, one duty (P-01-10) and one standby (P-01-11). These pumps are flow paced based on set point and the flow measured by flow meter (FIT-01-12).

A Flowmeter (FIT-01-12) installed in the discharge line of MBBR feed pumps shall indicate totalized flow and used to interlock flow detection with MBBR Feed pump line clogged and flow pacing for chemical dosing pumps - Carbon feed pump (MP-05-06-07), Urea feed pump (MP-06-08) and Defoamer feed pump (MP-06-09). All the chemicals mentioned above is proportionally dosed to the flow rate as measured by flowmeter (FIT-01-12). Carbon, Urea and Defoamer chemicals are directly injected to - MBBR Tank-1 (MBBR-03-01). Dosing of Carbon and Urea are flow paced during operating conditions and/ or time controlled during extended shutdown.

From MBBR Tank-1 (MBBR-03-01), water overflows to MBBR Tank-2 (MBBR-03-02) and into the clarifier (CLR-03-03) for secondary clarification. Two blowers (BLR-04-03 & BLR-04-04) will be providing air to the MBBR tank through the aeration grids. Effluent from the clarifier flows into transfer tank (TK-03-04) by gravity. From the transfer tank (TK-03-04) water is pumped to UV disinfection system. It consists of two UV units in parallel, one duty (UVT-05-04) and one standby (UVT-05-05). Disinfected effluent flows by gravity to treated effluent tank (TK-03-07). This tank also receives overflow from transfer tank (TK-03-

04), bypass from lift station and brine waste. Two submersible pumps (P-03-09 & P-03-08) operating in duty/standby mode pumps treated effluent to discharge from Container #2.

Two MBBR Blowers (BLR-04-03 & BLR-04-04) operating in a duty/standby mode will supply process aeration and mixing to the MBBR tanks reactor through the aeration grids. The blowers feed rate is controlled via a PID control and the required Dissolved Oxygen (DO) setpoint. The DO Sensor (AE-03-57) is located at the outlet of the MBBR Tank-2 (MBBR-03-02). Alkalinity Feed pump (MP-05-06) is controlled via PID control and the required pH set point in MBBR tank#2. The pH sensor (AE-03-5) is also located at the outlet of the MBBR Tank-2 (MBBR-03-02) and is used for monitoring purposes.

Sludge from clarifier (CLR-03-03) is pumped by two progress cavity pumps, one duty Sludge pump A (P-03-22) and one standby sludge pump B (P-03-23) to sludge holding tank (TK-02-01) in Container #1. Two blowers (BLR-04-01 and BLR-04-02), operating as duty / standby will be providing air to the EQ tank and Sludge tank (TK-01-01) through the aeration grids. Sludge dewatering system (SCR-02-06) is fed by two progress cavity pumps, one duty Sludge holding tank transfer pump A (P-02-04) and one standby Sludge holding tank transfer pump B (P-02-05) for volume reduction by dewatering. Liquid polymer makedown system (MP-06-01) doses polymer to sludge dewatering unit (SCR-02-06) by interlocking with sludge flowmeter (FIT-02-12). Filtrate from sludge dewatering system is transferred to Equalization tank (TK-01-03) via two air operate diaphragm pumps (P-02-07 & P-02-08), operating in duty/standby mode. Air from compressor AC-04-05 is used to operate the pumps through solenoid valves SV-02-07 & SV-02-08 respectively.

Each container is provided with wall mounted temperature sensors (Container 1 - TT-01-14 ; Container 2 – TT-03-11; Container 3- TT-06-06; Container 4 – TT-07-06), wall mounted H2S sensors (Container 1 - AE-01-15; Container 2 – AE-03-11), wall mounted Methane sensors (Container 1 - AE-01-15A; Container 2 – AE-03-11A) and space heaters (Container 1 - HTR-01-38; Container 2- HTR-03-49; Container 3- HTR-05-09; Container 4 – HTR-07-20). Two odour control systems, one for Container -1 (OC-03-12) with blower (BLR-03-35) and one for Container -2 (OC-03-13) with blower (BLR-03-36) has been provided for odour control. Bothe odour control systems are installed in Container -2.

1. HEADWORKS – SCREENING, EQUALIZATION & FEED TRANSFER

1.1 Equipment:

1.1.1 Screen A (SCR-01-01) and Screen-B (SCR-01-02)

Influent from the lift station will be introduced to headworks equipment [screw screens]. The screens Screen-A (SCR-01-01) and Screen B (SCR-01-02) will operate in duty/standby, where solids will be screened out and screened influent will flow to an Equalization tank (TK-01-13). Screen wastewater falls by gravity into the transfer tank built into the screen units from where they flow directly into the Equalization tank (TK-01-13) located underneath the screens. While there are two independent screens (duty/standby), each of the transfer tank are monitored by a level probe – LE-01-04 for Screen-B transfer tank and LE-01-05 for Screen-A transfer tank. In case of both the screen motors fault, flow will continue to be treated by manual bar screen (SCR-01-03) connected hydraulically with the screens. There is also a by-pass line provided from the lift station to before and after effluent transfer tank (TK-03-07).

Washwater solenoids SV-01-06 & SV-01-07 will open periodically to rinse debris off the screen openings. Timing and duration of the valves opening will be adjustable by an operator on the HMI. Screenings will fall into a collector bin.

The HMI should indicate the following alarm and status:

- Screen A (Duty) SCR-01-01 Ready (YA-01-01)
- Screen A (Duty) SCR-01-01 Commanded to RUN or STOP (YC-01-01)
- Screen A (Duty) SCR-01-01 Fault (YA-01-01)
- Screen A (Duty) SCR-01-01 Transfer tank level high (LH-01-04)
- Screen A (Duty) SCR-01-01 Transfer tank level low (LL-01-04)
- Screen A (Duty) SCR-01-01 commanded to spray wash ON or OFF (YC-01-06)
- Screen B (Standby) SCR-01-02 Ready (YA-01-02)
- Screen B (Standby) SCR-01-02 Cmmanded to RUN or STOP (YC-01-02)
- Screen B (Standby) SCR-01-02 Fault (YA-01-02)
- Screen B (Standby) SCR-01-02 Transfer tank level high (LH-01-05)
- Screen B (Standby) SCR-01-02 Transfer tank level low (LL-01-05)
- Screen B (Standby) SCR-01-02 Commanded to spray wash ON or OFF (YC-01-07)

Note: Operator will be required to select duty screen and isolate standby screen by opening / closing isolation valves (V-01-19 / V-01-20).

1.1.2 Equalization Tank (TK-01-13)

The EQ Tank (TK-01-13) level is measured by float level switche (LS-01-08) for high high level alarm and level transmitter (LE-01-09) can be monitored from HMI installed in Control Panel (MCP-01-00).

The HMI should indicate the following alarm and status:

- EQ Tank (TK-01-13) Level High Alarm (LS-01-08)
- EQ Tank (TK-01-13) High High Level (LHH-01-09)
- EQ Tank (TK-01-13) High Level (LH-01-09)
- EQ Tank (TK-01-13) Low Level (LL-01-09)

Note: All level set points are operator adjustable.

1.1.3 Equalization Tank Blowers (BL-04-01 & BL-04-02)

Two Blowers (BL-04-01 & BL-04-02) are installed inside Container #3 and can be monitored and controlled from HMI installed in Control Panel (MCP-01-00). The two blowers operate on duty/standby mode and will be providing air to the EQ tank and Sludge tank (TK-01-01) through the aeration grids. The blower operates on VFD and communicates with the PLC through Modbus RTU. The globe valve V-01-24 on the EQ Tank shall be used to adjust air flow to the tank (TK-01-13).

The HMI should indicate the following blower alarms and status:

- Blower #1 (BL-04-01) Fault (YA-04-01)
- Blower #1 (BL-04-01) Running (YI-04-01)
- Blower #1 (BL-04-01) Commanded to RUN or STOP (YC-04-01)
- Blower #1 (BL-04-01) in Hand/Auto (HS-04-01)
- Blower #1 (BL-04-01) selected as Duty (HS-04-01)
- Blower #1 (BL-04-01) Speed Control (KC-04-01)
- Blower #2 (BL-04-02) Fault (YA-04-02)
- Blower #2 (BL-04-02) Running (YI-04-02)
- Blower #2 (BL-04-02) Commanded to RUN or STOP (YC-04-02)
- Blower #2 (BL-04-02) in Hand/Auto (HS-04-02)
- Blower #2 (BL-04-02) selected as Duty (HS-04-02)
- Blower #2 (BL-04-02) Speed Control (KC-04-02)

Interlocks and/or permissive:

- If duty blower is in Fault (YA-04-01/YA-04-02), Standby blower will start automatically.

- If Air intake line temperature switch (TE-04-19) is used to shut down blowers (BL-04-01, BL-04-02, BL-04-03 and BL-04-04) when temperature is less than -15^{0}C.

1.1.4 MBBR Tank Feed Pumps (P-01-10 & P-01-11)

The equalized wastewater is transferred to the MBBR tank (MBBR-03-01) by two progress cavity pumps, Pump A duty (P-01-10) and Pump B standby (P-01-11). The pumps are located in Container #1 and can be monitored and controlled from HMI. The pumps operate on VFD based on the flow set point measured by flowmeter (FIT-01-12) and communicates with the PLC through Modbus RTU.

The HMI should indicate the following pump alarms and status:

- MBBR Tank Feed Pump A (P-01-10) Fault (YA-01-10)
- MBBR Tank Feed Pump A (P-01-10) Running (YI-01-10)
- MBBR Tank Feed Pump A (P-01-10) Commanded to RUN or STOP (YC-01-10)
- MBBR Tank Feed Pump A (P-01-10) in HAND or AUTO (HS-01-10)
- MBBR Tank Feed Pump A (P-01-10) Selected as duty (HS-01-10)
- MBBR Tank Feed Pump A (P-01-10) Speed control (KC-01-10)
- MBBR Tank Feed Pump B (P-01-11) Fault (YA-01-11)
- MBBR Tank Feed Pump B (P-01-11) Running (YI-01-11)
- MBBR Tank Feed Pump B (P-01-11) Commanded to RUN or STOP (YC-01-11)
- MBBR Tank Feed Pump B (P-01-11) in HAND or AUTO (HS-01-11)
- MBBR Tank Feed Pump B (P-01-11) Selected as duty (HS-01-11)
- MBBR Tank Feed Pump B (P-01-11) Speed control (KC-01-11)

Interlocks and/or permissive:

- MBBR feed pump in duty (P-01-10 / P-01-11) to start / stop based on water level in EQ tank (TK-01-13) as shown below:

Trigger Conditions	MBBR Tank Feed Pump (P-01-10 / P-01-11)	
	Pump - Duty	Pump - Standby
EQ Tank (TK-01-13) Level High Alarm (LS-01-08)	**ON**	**ON**
EQ Tank (TK-01-13) High High Level (LHH-01-09)	**ON**	**ON**
EQ Tank (TK-01-13) High Level (LH-01-09)	**ON**	**OFF**
EQ Tank (TK-01-13) Low Level (LL-01-09)	**OFF**	**OFF**

- MBBR feed pump in duty (P-01-10 / P-01-11) to control RUN speed based on flow detected through MBBR inlet flow meter (FIT-01-12).
- If duty pump is in Fault (YA-01-10/YA-01-11), Standby pump will start automatically.

1.1.5 MBBR Inlet Flowmeter (FIT-01-12)

The MBBR Inlet flowmeter installed in the discharge line of MBBR Tank Feed Pumps A/B (P-01-10 & P-01-11).

The HMI should indicate the following alarm and status:

- MBBR Inlet Flowmeter (FIT-01-12) MBBR Inlet Flow Indication (FI-01-12)
- MBBR Inlet Flowmeter (FIT-01-12) MBBR Inlet Flow Pulse (FQT-01-12)
- MBBR Inlet Flowmeter (FIT-01-12) Flow Control (FC-01-12)

The measured flow value is used to send interlock signals (FC-01-12) to the following pumps:

- MBBR Tank Feed Pump A (P-01-10) Speed Control (KC-01-11) when selected as Duty
- MBBR Tank Feed Pump B (P-01-11) Speed Control (KC-01-11) when selected as Duty
- Urea Feed Pump (MP-06-08) Speed Control (SC-06-08)
- Defoamer Feed Pump (MP-06-09) Speed Control (SC-06-09)
- Carbon Feed Pump (MP-06-07) Speed Control (SC-06-07)
- The flow meter also interlocks to detect MBBR Feed Line clogged to HMI.

2. BIOLOGICAL TREATMENT & SECONDARY CLARIFICATION– MBBR, CLARIFIER, CHEMICAL DOSING AND BLOWERS

2.1.1 MBBR Tank #1 (MBBR-03-01), MBBR Tank #2 (MBBR-03-02) & Clarifier (CLR-03-03).

The MBBR Tank- #1 (MBBR-03-01) and MBBR Tank #2 (MBBR-03-02) are connected in series. After BOD removal in MBBR Tank #1 (MBBR-03-01), water overflows to MBBR Tank #2 (MBBR-03-02) where nitrification takes place. From there, water overflows into Clarifier (CLR-03-03) for secondary clarification (removal of TSS) and gets collected in transfer tank (TK-03-04) by gravity. The transfer tank (TK-03-04) level is measured by four float level switches (LS-03-14, LS-03-15, LS-03-16 and LS-03-17) and can be monitored from HMI installed in Control Panel (MCP-01-00). These level floats help to monitor water level in MBBR tanks (MBBR-03-01 & MBBR-03-02) and Clarifier (CLR-03-03) as they are connected in series and overflow by gravity from one tank to another.

The DO concentration in MBBR system is measured by DO sensor (AE-03-57) mounted on the outlet of MBBR Tank #2 (MBBR-03-02) and transmitted to PLC as an analog input by DO transmitter/controller (AIT-03-57). This can be monitored from HMI installed in Control Panel (MCP-01-00).

The measured DO value is used to send interlock signals (AI-03-57) to the following blowers:

- MBBR Tank Blower #1 (BL-04-03) Speed Control (KC-04-03) when selected as Duty
- MBBR Tank Blower #2 (BL-04-04) Speed Control (KC-04-04) when selected as Duty

The pH in MBBR Tank #2 (MBBR-03-02) is measured by pH sensor (AE-03-58) mounted on MBBR Tank #2 (MBBR-03-02) and transmitted to PLC as an analog input by pH transmitter/controller (AIT-03-58). This can be monitored from HMI installed in Control Panel (MCP-01-00).

The measured pH value is used to send interlock signals (AI-03-58) to the following pumps:

- Alkalinity Feed Pump (MP-05-06) Speed Control (SC-01-11)

The HMI should indicate the following alarm and status:

- MBBR DO sensor (AE-03-57) Level Indication (AI-03-57)
- MBBR DO Sensor (AE-03-57) Level Low / Fault (YA-03-57)
- MBBR pH sensor (AE-03-58) pH Indication (AI-03-58)
- Transfer Tank (TK-03-04) Level High High Alarm (LHH-03-14)
- Transfer Tank (TK-03-04) Level High Alarm (LH-03-15)
- Transfer Tank (TK-03-04) Level Low Alarm (LL-03-16)
- Transfer Tank (TK-03-04) Level Low Low Alarm (LLL-03-17)

The MBBR Blowers – Blower #1 (BL-04-03) and Blower #2 (BL-04-04) installed in Container #3 can be monitored and controlled from HMI installed in Control Panel (MCP-01-00). The blowers will be operating as duty/standby; only one at a time is needed to aerate the MBBR tanks through aeration grid. The DO sensor (AE-03-57) and transmitter DO transmitter (AIT-03-57) are located in the MBBR, and transmit the DO value to PLC analog input module.

The blowers operate on VFD (which should have a consistent torque), at speed that will be determined based on the reading of the DO sensor (AE-03-57).

The HMI should indicate the following blower alarms and status:

- MBBR Tank Blower #1 (BL-04-03) Fault (YA-04-03)
- MBBR Tank Blower #1 (BL-04-03) Running (YI-04-03)
- MBBR Tank Blower #1 (BL-04-03) Commanded to RUN or STOP (YC-04-03)
- MBBR Tank Blower #1 (BL-04-03) in Hand/Auto (HS-04-03)
- MBBR Tank Blower #1 (BL-04-03) selected as Duty (HS-04-03)
- MBBR Tank Blower #1 (BL-04-03) Speed Control (KC-04-03)
- MBBR Tank Blower #2 (BL-04-04) Fault (YA-04-04)
- MBBR Tank Blower #2 (BL-04-04) Running (YI-04-04)
- MBBR Tank Blower #2 (BL-04-04) Commanded to RUN or STOP (YC-04-04)
- MBBR Tank Blower #2 (BL-04-04) in Hand/Auto (HS-04-04)
- MBBR Tank Blower #2 (BL-04-04) selected as Duty (HS-04-04)
- MBBR Tank Blower #2 (BL-04-04) Speed Control (KC-04-04)

Interlocks and/or permissive:

- MBBR Tank Blower in duty (BL-04-03 / BL-04-04) speed control (KC-04-03 & KC-04-04) based on DO value measured by DO sensor (AE-03-57).
- If Air intake line temperature switch (TE-04-19) is used to shut down blowers (BL-04-01, BL-04-02, BL-04-03 and BL-04-04) when temperature is less than -15^{0}C.

2.1.2 Alkalinity Dosing System - Alkalinity Tank (TK-05-08), Mixer (MX-05-06) & Dosing Pump (MP-05-06)

Alkalinity source Tank (TK-05-08) is mixed by top mounted mixer (MX-05-07).

The Alkalinity Dosing Pump (MP-05-06) can be monitored and controlled either from the pump display or from HMI.

The HMI should indicate the following alarms and status:

- Alkalinity Dosing Pump (MP-05-06) commanded to RUN or STOP (YC-05-06)
- Alkalinity Dosing Pump (MP-05-06) Speed control (SC-05-06)

Interlocks and/or permissive:

- Alkalinity dosing pump (MP-05-06) Speed Control (SC-01-11) based on pH value (AI-03-58) measured by pH sensor (AE-03-58).

2.1.3 Carbon Dosing Pump (MP-06-07)

The Carbon Dosing Pump (MP-06-07) can be monitored and controlled either from the pump display or from HMI installed in Control Panel (MCP-01-00).

The HMI should indicate the following alarms and status:

- Carbon Dosing Pump (MP-06-07) commanded to RUN or STOP (YC-06-07)
- Carbon Dosing Pump (MP-06-07) Speed control (SC-06-07)

Interlocks and/or permissive:

- Carbon dosing pump (MP-06-07) to start dosing (YC-06-07)– when flow is detected through MBBR feed flow meter (FIT-01-12).
- Carbon dosing pump (MP-06-07) Speed Control (SC-06-07) based on flow value (FC-01-12) measured by MBBR Inlet flow meter (FIT-01-12) or based on timer during extended shutdown.

2.1.4 Defoamer Dosing Pump (MP-06-09)

The Defoamer Dosing Pump (MP-06-09) can be monitored and controlled either from the pump display or from HMI installed in Control Panel (MCP-01-00).

The HMI should indicate the following alarms and status:

- Defoamer Dosing Pump (MP-06-09) commanded to RUN or STOP (YC-06-09)
- Defoamer Dosing Pump (MP-06-09) Speed control (SC-06-09)

Interlocks and/or permissive:

- Defoamer dosing pump (MP-06-09) to start dosing (YC-06-09)– when flow is detected through MBBR feed flow meter (FIT-01-12).
- Defoamer dosing pump (MP-06-09) Speed Control (SC-06-09) based on flow value (FC-01-12) measured by MBBR Inlet flow meter (FIT-01-12).

2.1.5 Urea Dosing System – Urea Tank Mixer (MX-06-07) and Urea Dosing Pump (MP-06-08)

Urea source Tank (by others) is mixed by top mounted mixer (MX-06-07).

The Urea Dosing Pump (MP-06-08) can be monitored and controlled either from the pump display or from HMI installed in Control Panel (MCP-01-00).

The HMI should indicate the following alarms and status:

- Urea Dosing Pump (MP-06-08) commanded to RUN or STOP (YC-06-08)
- Urea Dosing Pump (MP-06-08) Speed control (SC-06-08)

Interlocks and/or permissive:

- Urea dosing pump (MP-06-08) to start dosing (YC-06-08)– when flow is detected through MBBR feed flow meter (FIT-01-12).
- Urea dosing pump (MP-06-08) Speed Control (SC-06-08) based on flow value (FC-01-12) measured by MBBR Inlet flow meter (FIT-01-12) or based on timer during extended shutdown.

3. EFFLUENT TRANSFER AND UV DISINFECTION

3.1.1 UV Feed Pumps (P-03-05 & P-03-05)

The biologically treated and clarified wastewater is transferred to the UV Disinfection System UV Disinfection System A/B) by two progress cavity pumps, Pump A duty (P-03-05) and Pump B standby (P-03-06). The pumps are located in Container #1 and can be monitored and controlled from HMI. The pumps operate on VFD and communicates with the PLC through Modbus RTU.

The HMI should indicate the following pump alarms and status:

- UV Feed Pump A (P-03-05) Fault (YA-03-05)
- UV Feed Pump A (P-03-05) Running (YI-03-05)
- UV Feed Pump A (P-03-05) Commanded to RUN or STOP (YC-03-05)
- UV Feed Pump A (P-03-05) in HAND or AUTO (HS-03-05)
- UV Feed Pump A (P-03-05) Selected as duty (HS-03-05)
- UV Feed Pump A (P-03-05) Speed control (KC-03-05)
- UV Feed Pump B (P-03-06) Fault (P-03-06)
- UV Feed Pump B (P-03-06) Running (P-03-06)
- UV Feed Pump B (P-03-06) Commanded to RUN or STOP (YC- P-03-06)
- UV Feed Pump B (P-03-06) in HAND or AUTO (HS- P-03-06)
- UV Feed Pump B (P-03-06) Selected as duty (HS- P-03-06)
- UV Feed Pump B (P-03-06) Speed control (KC- P-03-06)

Interlocks and/or permissive:

- UV feed pump in duty (P-03-05 / P-03-06) to start / stop based on water level in Transfer tank (TK-03-04) as shown below:

Trigger Conditions	UV Feed Pumps (P-03-05 / P-03-06)	
	Pump -Duty	Pump -Standby
Transfer Tank (TK-03-04) Level High High Alarm (LHH-03-14)	**ON**	**ON**
Transfer Tank (TK-03-04) Level High Alarm (LH-03-15)	**ON**	**OFF**
Transfer Tank (TK-03-04) Level Low Alarm (LL-03-16)	**OFF**	**OFF**
Transfer Tank (TK-03-04) Level Low Low Alarm (LLL-03-17)	**OFF**	**OFF**

3.1.2 UV Inlet Flowmeter (FIT-05-03)

The UV Inlet flowmeter installed in the discharge line of UV Feed Pumps A/B (P-03-05 & P-03-06).

The HMI should indicate the following alarm and status:

- UV Inlet Flowmeter (FIT-05-03) UV Inlet Flow Indication (FI-05-03)
- UV Inlet Flowmeter (FIT-05-03) UV Inlet Flow Pulse (FQT-05-03)
- UV Inlet Flowmeter (FIT-05-03) also interlocks to detect UV Feed Line clogged to HMI.

3.1.3 UV Disinfection System (A/B)

Treated effluent from the transfer tank (TK-03-04) will be pumped UV Disinfection system. The UV disinfection system A and UV Disinfection System B will operate in duty/standby, where effluent will be disinfected flow to a Treated Effluent Transfer tank (TK-03-07) by gravity. Each UV Disinfection System is sized to handle the full flow.

The UV Disinfection System A/B can be monitored and controlled either from the UV control panel display or from HMI installed in Control Panel (MCP-01-00).

The HMI should indicate the following alarms and status:

- UV Disinfection System A – Indicate UV Intensity (UVTI-05-05)
- UV Disinfection System A – UV Fault Alarm (YI-05-05)
- UV Disinfection System B – Indicate UV Intensity (UVTI-05-04)
- UV Disinfection System B – UV Fault Alarm (YI-05-04)

Note: Operator will be required to select duty UV System and isolate standby UV system by opening / closing isolation valves (V-05-11 / V-05-12).

3.1.4 Treated Effluent Transfer Tank (TK-03-07)

The Treated Effluent Transfer Tank (TK-03-07) level is measured by four float level switches (LS-03-18, LS-03-19, LS-03-20, LS-03-21) can be monitored from HMI installed in Control Panel (MCP-01-00).

The HMI should indicate the following alarm and status:

- Treated Effluent Tank (TK-03-07) Level High High Alarm (LHH-03-18)
- Treated Effluent Tank (TK-03-07) Level High Alarm (LH-03-19)
- Treated Effluent Tank (TK-03-07) Level Low Alarm (LL-03-20)
- Treated Effluent Tank (TK-03-07) Level Low Low Alarm (LLL-03-21)

3.1.5 Effluent Tank Pumps (P-03-08 & P-03-09)

The disinfected effluent is pumped out to discharge from Container #2 by two progress cavity pumps, one duty (P-03-08) and one standby (P-03-09). The pumps are submerged in treated effluent transfer tank (TK-03-07) and can be monitored and controlled from HMI. The pumps operate on VFD and communicates with the PLC through Modbus RTU. The pumps are provided with leak detection alarms for safety.

The HMI should indicate the following pump alarms and status:

- Effluent Tank Pump (P-03-08) Fault (YA-03-08)
- Effluent Tank Pump (P-03-08) Running (YI-03-08)
- Effluent Tank Pump (P-03-08) Commanded to RUN or STOP (YC-03-08)
- Effluent Tank Pump (P-03-08) in HAND or AUTO (HS-03-08)
- Effluent Tank Pump (P-03-08) Selected as duty (HS-03-08)
- Effluent Tank Pump (P-03-08) Speed control (KC-03-08)
- Effluent Tank Pump (P-03-08) Leak Indication Alarm (YA-03-08)
- Effluent Tank Pump (P-03-09) Fault (P-03-09)
- Effluent Tank Pump (P-03-09) Running (P-03-09)
- Effluent Tank Pump (P-03-09) Commanded to RUN or STOP (YC- P-03-09)
- Effluent Tank Pump (P-03-09) in HAND or AUTO (HS- P-03-09)
- Effluent Tank Pump (P-03-09) Selected as duty (HS- P-03-09)
- Effluent Tank Pump (P-03-09) Speed control (KC- P-03-09)
- Effluent Tank Pump (P-03-08) Leak Indication Alarm (YA-03-09)

Interlocks and/or permissive:

- Effluent tank pump in duty (P-03-08 / P-03-09) to to start / stop based on water level in Effluent Transfer tank (TK-03-07) as shown below:

Trigger Conditions	Effluent Tank Pumps (P-03-08 / P-03-09)	
	Pump -Duty	Pump -Standby
Treated Effluent Tank (TK-03-07) Level High High Alarm (LHH-03-18)	**ON**	**ON**
Treated Effluent Tank (TK-03-07) Level High Alarm (LH-03-19)	**ON**	**OFF**
Treated Effluent Tank (TK-03-07) Level Low Alarm (LL-03-20)	**OFF**	**OFF**
Treated Effluent Tank (TK-03-07) Level Low Low Alarm (LLL-03-21)	**OFF**	**OFF**

4. SLUDGE HANDLING SYSTEM

4.1.1 Clarifier Sludge Pumps (P-03-22 & P-03-23)

The sludge settled at the bottom of clarifier (CLR-03-03) from Container #2 is pumped to Sludge Holding Tank (TK-02-01) by two progress cavity pumps, Pump A duty (P-03-22) and Pump B standby (P-03-23). The pumps can be monitored and controlled from HMI. The pumps operate on VFD and communicates with the PLC through Modbus RTU. The discharge line of the clarifier sludge pump A/B line is fitted with a pressure switch to transmit high pressure alarm for safety.

The HMI should indicate the following pump alarms and status:

- Clarifier Sludge Pump A (P-03-22) Fault (YA-03-22)
- Clarifier Sludge Pump A (P-03-22) Running (YI-03-22)
- Clarifier Sludge Pump A (P-03-22) Commanded to RUN or STOP (YC-03-22)
- Clarifier Sludge Pump A (P-03-22) in HAND or AUTO (HS-03-22)
- Clarifier Sludge Pump A (P-03-22) Selected as duty (HS-03-22)
- Clarifier Sludge Pump A (P-03-22) Speed control (KC-03-22)
- Clarifier Sludge Pump B (P-03-23) Fault (YA-03-23)
- Clarifier Sludge Pump B (P-03-23) Running (YI-03-23)
- Clarifier Sludge Pump B (P-03-23) Commanded to RUN or STOP (YC-03-23)
- Clarifier Sludge Pump B (P-03-23) in HAND or AUTO (HS-03-23)
- Clarifier Sludge Pump B (P-03-23) Selected as duty (HS-03-23)
- Clarifier Sludge Pump B (P-03-23) Speed control (KC-03-23)
- Pressure Switch (PS-03-23) High Pressure Alarm (PHHA-3-23)

4.1.2 Sludge Holding Tank (TK-02-01)

The Sludge Holding Tank (TK-02-01) level is measured by float level switch (LS-02-03) and radar level transmitter (LIT-02-02) and can be monitored from HMI installed in Control Panel (MCP-01-00).

The HMI should indicate the following alarm and status:

- Sludge Holding Tank (TK-02-01) Level High Alarm (LHA-02-03)
- Sludge Holding Tank (TK-02-01) High High Level (LHH-02-02)
- Sludge Holding Tank (TK-02-01) High Level (LH-02-02)
- Sludge Holding Tank (TK-02-01) Low Level (LL-02-02)

4.1.3 Sludge Holding Tank Blower (BL-04-01 & BL-04-02)

Two Blowers (BL-04-01 & BL-04-02) are installed inside Container #3 and can be monitored and controlled from HMI installed in Control Panel (MCP-01-00). The two blowers operate on duty/standby mode and will be providing air to the EQ tank and Sludge tank (TK-01-01) through the aeration grids. The blower operates on VFD and communicates with the PLC through Modbus RTU. The globe valve V-02-34 on the sludge Tank shall be used to adjust air flow to the tank (TK-01-13).

The HMI should indicate the following blower alarms and status:

- Blower #1 (BL-04-01) Fault (YA-04-01)
- Blower #1 (BL-04-01) Running (YI-04-01)
- Blower #1 (BL-04-01) Commanded to RUN or STOP (YC-04-01)
- Blower #1 (BL-04-01) in Hand/Auto (HS-04-01)
- Blower #1 (BL-04-01) selected as Duty (HS-04-01)
- Blower #1 (BL-04-01) Speed Control (KC-04-01)
- Blower #2 (BL-04-02) Fault (YA-04-02)
- Blower #2 (BL-04-02) Running (YI-04-02)
- Blower #2 (BL-04-02) Commanded to RUN or STOP (YC-04-02)
- Blower #2 (BL-04-02) in Hand/Auto (HS-04-02)
- Blower #2 (BL-04-02) selected as Duty (HS-04-02)
- Blower #2 (BL-04-02) Speed Control (KC-04-02)

Interlocks and/or permissive:

- If duty blower is in Fault (YA-04-01/YA-04-02), Standby blower will start automatically.
- If Air intake line temperature switch (TE-04-19) is used to shut down blowers (BL-04-01, BL-04-02, BL-04-03 and BL-04-04) when temperature is less than -15^{0}C.

4.1.4 Sludge Transfer Pumps (P-02-04 & P-02-05)

The sludge from sludge holding tank (TK-02-01) to Sludge Dewatering System (SCR-02-06) by two progress cavity pumps, Pump A duty (P-02-04) and Pump B standby (P-02-05). The pumps are located in Container #1 and can be monitored and controlled from HMI. The pumps operate on VFD and communicates with the PLC through Modbus RTU.

The HMI should indicate the following pump alarms and status:

- Sludge Transfer Pump A (P-02-04) Fault (YA-02-04)
- Sludge Transfer Pump A (P-02-04) Running (YI-02-04)

- Sludge Transfer Pump A (P-02-04) Commanded to RUN or STOP (YC-02-04)
- Sludge Transfer Pump A (P-02-04) in HAND or AUTO (HS-02-04)
- Sludge Transfer Pump A (P-02-04) selected as duty (HS-02-04)
- Sludge Transfer Pump A (P-02-04) Speed control (KC-02-04)
- Sludge Transfer Pump B (P-02-05) Fault (YA-02-05)
- Sludge Transfer Pump B (P-02-05) Running (YI-02-05)
- Sludge Transfer Pump B (P-02-05) Commanded to RUN or STOP (YC-02-05)
- Sludge Transfer Pump B (P-02-05) in HAND or AUTO (HS-02-05)
- Sludge Transfer Pump B (P-02-05) selected as duty (HS-02-05)
- Sludge Transfer Pump B (P-02-05) Speed control (KC-02-05)

Interlocks and/or permissive:

- Sludge Transfer Pump in duty (P-02-04 / P-02-03) to start / stop based on sludge level in Sludge Holding tank (TK-02-01) as shown below:

Trigger Conditions	Sludge Transfer Pumps (P-02-04 / P-02-05)	
	Pump -Duty	Pump -Standby
Sludge Holding Tank (TK-02-01) Level High Alarm (LHA-02-03)	**ON**	**ON**
Sludge Holding Tank (TK-02-01) High High Level (LHH-02-02)	**ON**	**ON**
Sludge Holding Tank (TK-02-01) High Level (LH-02-02)	**ON**	**OFF**
Sludge Holding Tank (TK-02-01) Low Level (LL-02-02)	**OFF**	**OFF**

4.1.5 Sludge Flowmeter (FIT-02-12)

The sludge flowmeter installed in the discharge line of Sludge Transfer Pumps A/B (P-02-04 & P-02-05).

The HMI should indicate the following alarm and status:

- Sludge Flowmeter (FIT-02-12) Dewatering system Inlet Flow Indication (FI-02-12)
- Sludge Flowmeter (FIT-02-12) Dewatering system Inlet Flow Pulse (FQT-02-12)
- Sludge Flowmeter (FIT-02-12) Flow Control (FC-02-12)

The measured flow value is used to send interlock signals (FC-02-12) to the following pumps:

- Sludge Transfer Pumps B (P-02-04) Speed Control (KC-02-04) when selected as Duty
- Sludge Transfer Pumps A (P-02-05) Speed Control (KC-02-05) when selected as Duty
- Polymer Metering Pump (MP-06-03) Speed Control (SC-06-03)

- Sludge Flowmeter (FIT-02-12) also interlocks to detect Dewatering Feed Line clogged to HMI.

4.1.6 Sludge Dewatering System (SCR-02-06)

Sludge Dewatering system (SCR-02-06) is used to dewater the sludge pumped from sludge holding tank (TK-02-01) by Sludge Transfer Pumps (P-02-04/P-02-05).

The HMI should indicate the following alarms and status:

- Filtrate Level Switch (LS-02-09) Level High (LH-02-09)

Note: If filtrate level switch (LS-02-09) indicated Level High (LH-02-09) more than 5 minutes, it indicated failure to pump out filtrate and dewatering system should stop.

4.1.7 Sludge Dewatering Screen Pumps (P-02-07 & P-02-08)

The filtrate from the Sludge Dewatering system (SCR-02-06) is transferred to EQ tank (TK-01-13)) by two air operated diaphragm pumps, Pump A duty (P-02-07) and Pump B standby (P-02-08). The Solenoid valve (SV-02-07) is activated from HMI to receive air from compressor (AC-04-05) to RUN Pump A (P-02-07) and solenoid valve (SV-02-08)) is activated from HMI to receive air from compressor (AC-04-05) to RUN Pump B (P-02-08). The On/Off position of the valves can be monitored and controlled from HMI.

The HMI should indicate the following status:

- Solenoid Valve (SV-02-07) commanded to ON/OFF (Open/Close) (YC-02-07)
- Solenoid Valve (SV-02-08) commanded to ON/OFF (Open/Close) (YC-02-08)

5. AUXILLARY EQUIPMENT – ODOUR CONTROL SYSTEM, METHANE, H2S DETECTOR, TEMPERATURE DETECTOR.

5.1.1 Odour Control System for Container #1 (OC-03-12)

Odour Control System for Container #1 (OC-03-12) and the associated Blower (BL-03-35) is installed in Container #2 and can be monitored and controlled from HMI.

The HMI should indicate the following alarms and status:

- Odour Control System (OC-03-12) Blower (BL-03-35) ON/OFF (YC-03-12)

5.1.2 Odour Control System for Container #2 (OC-03-13)

Odour Control System for Container #2 (OC-03-13) and the associated Blower (BL-03-36) is installed in Container #2 and can be monitored and controlled from HMI.

The HMI should indicate the following alarms and status:

- Odour Control System (OC-03-13) Blower (BL-03-36) ON/OFF (YC-03-13)

5.1.3 Wall Mounted Temperature Sensors (TT-01-14, TT-03-11, TT-06-06, TT-07-06)

Wall mounted temperature sensors are installed in containers to monitor temperature inside the respective containers. Container #1 Temperature sensor (TT-01-14), Container #2 Temperature sensor (TT-03-11), Container #3 Temperature sensor (TT-06-06) and Container #4 Temperature sensor (TT-07-06) can be monitored and controlled from HMI.

The HMI should indicate the following alarms and status:

- Temperature sensor (TT-01-14) Container #1 Air temperature Indicate (TI-01-14)
- Temperature sensor (TT-01-14) Container #1 Air Low temperature Alarm (TAL-01-14)
- Temperature sensor (TT-03-11) Container #2 Air temperature Indicate (TI-03-11)
- Temperature sensor (TT-03-11) Container #2 Air Low temperature Alarm (TAL-03-11)
- Temperature sensor (TT-06-06) Container #3 Air temperature Indicate (TI-06-06)
- Temperature sensor (TT-06-06) Container #3 Air Low temperature Alarm (TAL-06-06)
- Temperature sensor (TT-07-06) Container #4 Air temperature Indicate (TI-07-06)
- Temperature sensor (TT-07-06) Container #4 Air Low temperature Alarm (TAL-07-06)

5.1.4 Wall Mounted H2S Sensors (AE-01-15 & AE-03-11)

Wall mounted H2S sensors are installed in containers to monitor H2s levels inside the respective containers. Container #2 H2S sensor (AE-01-15) and Container #2 H2S sensor (AE-03-11) can be monitored and controlled from HMI.

The HMI should indicate the following alarms and status:

- H2S sensor (AE-01-15) Container #1 H2S Indicate (AI-01-15)
- H2S sensor (AE-01-15) Container #1 H2S High Level Alarm (HAL-01-15)
- H2S sensor (AE-03-11) Container #2 H2S Indicate (AE-03-11)
- H2S sensor (AE-03-11) Container #2 H2S High Level Alarm (HAL-03-11)

Note: Operator Interference is required when H2S High level alarm is ON.

5.1.5 Wall Mounted Methane Sensors (AE-01-15A & AE-03-11A)

Wall mounted Methane sensors are installed in containers to monitor Methane levels inside the respective containers. Container #2 Methane sensor (AE-01-15A) and Container #2 Methane sensor (AE-03-11A) can be monitored and controlled from HMI.

The HMI should indicate the following alarms and status:

- Methane sensor (AE-01-15A) Container #1 Methane Indicate (AI-01-15A)
- Methane sensor (AE-01-15A) Container #1 Methane High Level Alarm (HAL-01-15A)
- Methane sensor (AE-03-11A) Container #2 Methane Indicate (AE-03-11A)
- Methane sensor (AE-03-11A) Container #2 Methane High Level Alarm (HAL-03-11A)

Note: Operator Interference is required when Methane High level alarm is ON.

Section 1.5

HMI Controls O&M

H2flow Equipment Inc.

HMI CONTROLS O&M

Eureka, Q-285-20

580 Oster Lane, Vaughan, Ontario, L4K 2C1, Canada TEL (905) 660-9775 / FAX (905) 660-97440
info@h2flow.com www.h2flow.com

Contents

Navigate the User Interface 3
System Mode Buttons 4
System Status Bar 4
Equipment Controls and Status 6
Device indicator icons 6
Valve indicator icons 7
Analog Status 7
Tank Status 8
System Overview 9
Screen & EQ Overview 12
MBBR, Clarifier & Chemical Overview 13
Transfer Tank & UV Overview 14
Sludge & Dewater Overview 15
Bypass WWTP Overview 16
System Controls 17
Odor Controls 18
Screen Controls 19
Bypass WWTP Controls 19
EQ Tank Controls 20
MBBR & Clarifier Controls 21
Transfer Tank Controls 22
UV Controls 23
Sludge Tank Controls 24
Dewatering Tank Controls 25
EQ Blower & Sludge Blower Controls. 26
Chemical Dosing 27
Settings 28
Settings Home 28
Settings Pump Rotation 29
Settings Timers 1 30

Settings Timers 2 31
Settings Chemicals 32
Settings Analog Scaling 33
Settings Analog Scaling 34
Settings Alarms 40
Alarms 41
Active Alarms 41
Alarm History 42
Security Settings 43

Navigate the User Interface

Navigation buttons along the bottom of the HMI are used to navigate through displays.

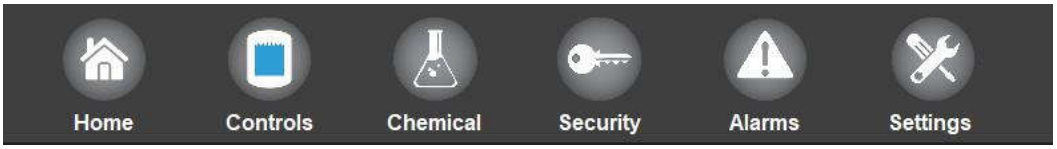

Icon	Function	Description
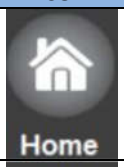	Home	Displays operational summary of all tanks, pumps and valves. System can be turned to Auto/Manual/OFF
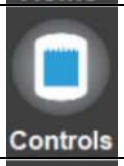	Controls	Navigation to pumps/motors/valve controls
	Chemical	Navigation to chemical dosing pumps controls
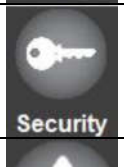	Security Log in/log out	Login and Logout buttons on the navigation bar to allow control of user security level. When toggled, login and logout buttons appear next to the security button.
	Alarm Status Screen	Displays the currently active alarms and allows access to Alarm History screen
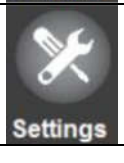	System Settings Screens	Allows access to system configuration settings as allowed to current security level. Settings are organized in pages by function.

Navigation buttons along the top of the HMI are used to navigate through overview displays



System Mode Buttons

Icon	Function	Description
	OFF	In OFF the system will have no actions and will not alarm.
	AUTO	Auto operation will put the system in full automation and all equipment will be controlled by the PLC.
	MANUAL	Manual operation will have no auto operations and will allow the user to operate all equipment manually.

System control

Icon	Function	Description
	Fault Reset	Fault Reset button is used to reset any alarms

System Status Bar

The system status bar can be found at the top of the home screen. This will give indication of the current system state.

Icon	Function	Description
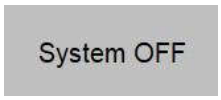	System OFF	The system is off. Equipment will not run or alarm in this state.
	Auto Delay	The system delay starting in Auto. Equipment will not run until the Auto delay timer has elapsed. System will be in Auto after the delay.
	Auto	The system is in Auto. Equipment will operate automatically depending on individual start commands and interlocks
	MANUAL	The system is in manual. All equipment will be controlled by the operator. No auto operation is active in this mode. (yellow)
	E-Stopped	Control Panel E-stop is active. All equipment will not function until the e-stop is reset.

Equipment Controls and Status

Device indicator icons

Controlling devices can be controlled from their designated display when on the desired controls screen.

Motor	Blower	Valve	Pump		Valve
			Change the speed of the VFD 0 – 100%	Display of Intensity of the UV	
			Speed Feedback Display current speed		
Image Color Pumps, Motors Blowers, UV: (**Grey** – OFF or Stopped; **Green** - Running; **Red** – Faulted) Valve: (**Grey** – Closed; **Green** – Open, **Yellow** – Transition, **Red** – Faulted)					
Status Bar Shows currnet state of device					
Auto Button Device in auto operation					
Manual Button Device in manual operation					
Pumps, Motors Blowers, UV: **(Start/Stop** Appears when device is in manual control. Device can be operated manually) Valves **(Open / Close** Appears when device is in manual control. Valve can be operated manually)					
Disable Disables the device.					

Valve indicator icons

Icon	Function	Description
	Valve Open	Valve indicating its Open (green)
	Valve Closed	Valve indicating its Close (grey)
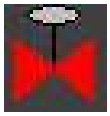	Valve Fault	Valve indicating Fault (Red)
	Valve in Transition	Valve indicating transition (Yellow)

Analog Status

All analog input devices are displayed on the main overview screen.
Values in grey indicate values have not reached alarm levels or there is a valid analog signal.
Values in red will indicate a fault. High, Low limit or analog fault

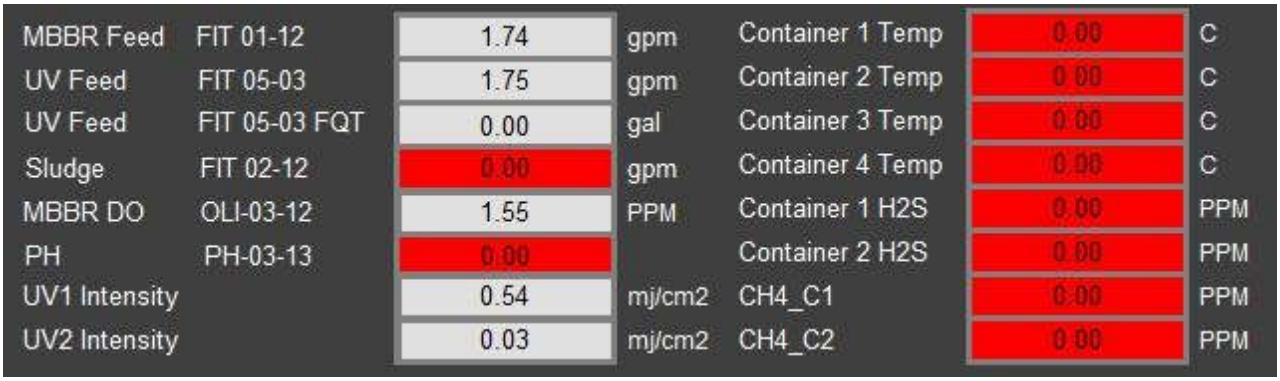

Tank Status

Main overview display will show tank level indicators. Pushing on the indicator on the overview display will navigate to the overview display related to the tank process.



Pushing the controls button on the bottom of the page or pushing the tank icon on the tanks overview display will display the tank level controls.

Tanks Status	Description	Level Setpoints	Description
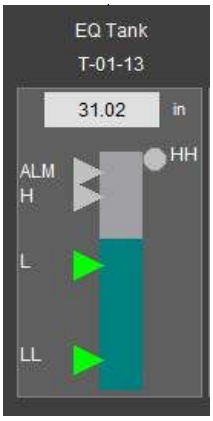	• If the tank has an analog signal, a level will be displayed at the top of the fill graphic. • • Fill graphic bar will indicate water level. Blue in color will indicate water level and grey will indicate empty status.		• Level Setpoints only active if the tank has an analog signal. • Each setpoint indicates a level where devices will be operated. • Setpoint levels will be indicated as a triangle on the tank status • Setpoints can be changed by pushing on the corresponding number.

Icon	Function	Description
	Level setpoint indicator (Grey)	(Grey) Triangle indicating Tank level not at level setpoint
	Level setpoint indicator (Green)	(Green) Triangle indicating Tank level is at level setpoint
	Float (Grey)	(Grey) Circle indicating Tank float level not active
	Float (Green)	(Green) Circle indicating Tank float level is active
	Tank Level	If the tank has an analog signal, a tank level will be displayed at the top of the fill graphic.
	Tank Level Units	Tank level units will be displayed to the right of the tank level display

System Overview

System Auto

The system is in Auto. Equipment will operate automatically depending on individual start commands and interlocks

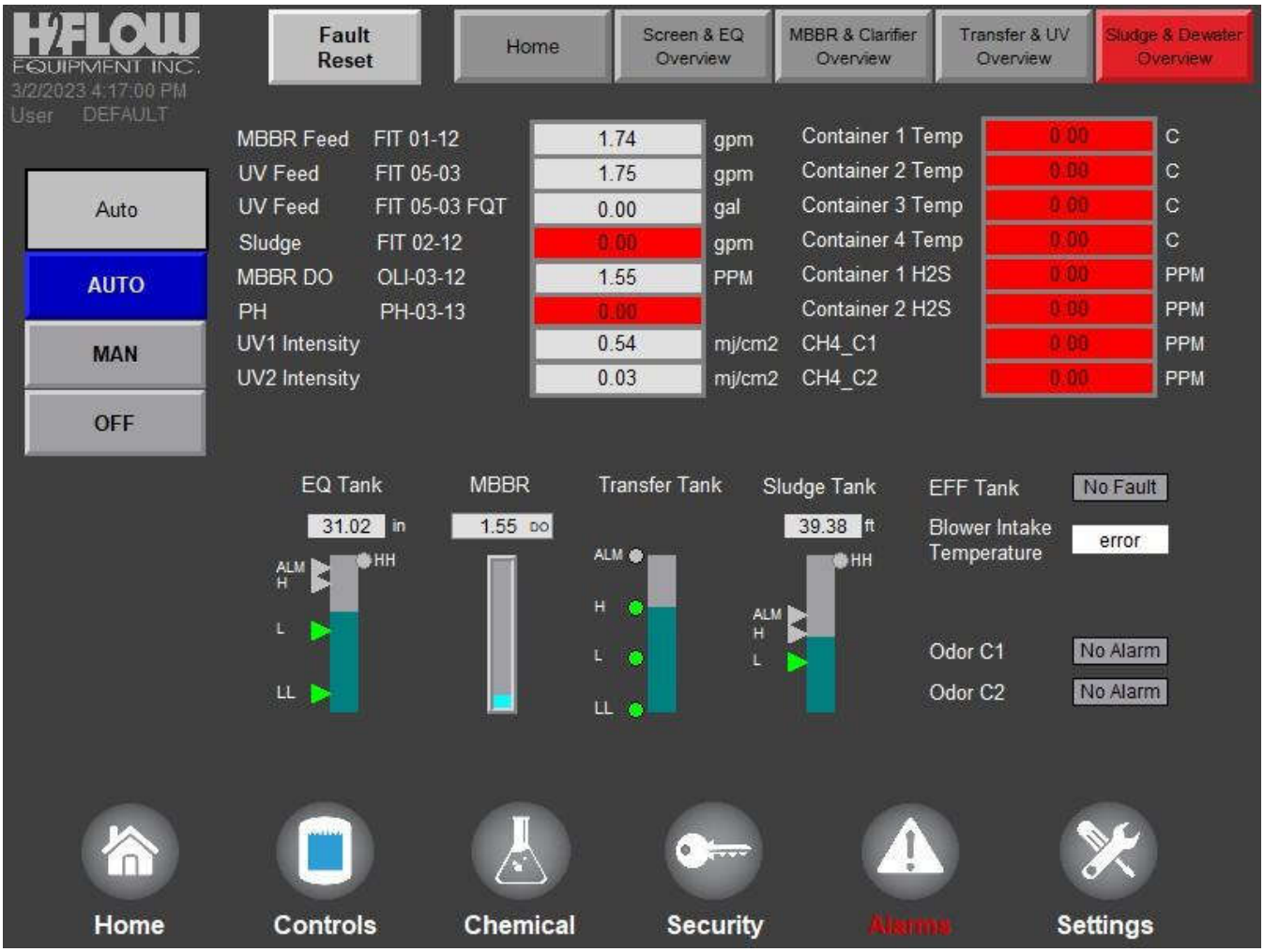

System Manual

The system is in manual. All equipment will be controlled by the operator. No auto operation is active in this mode. (yellow)

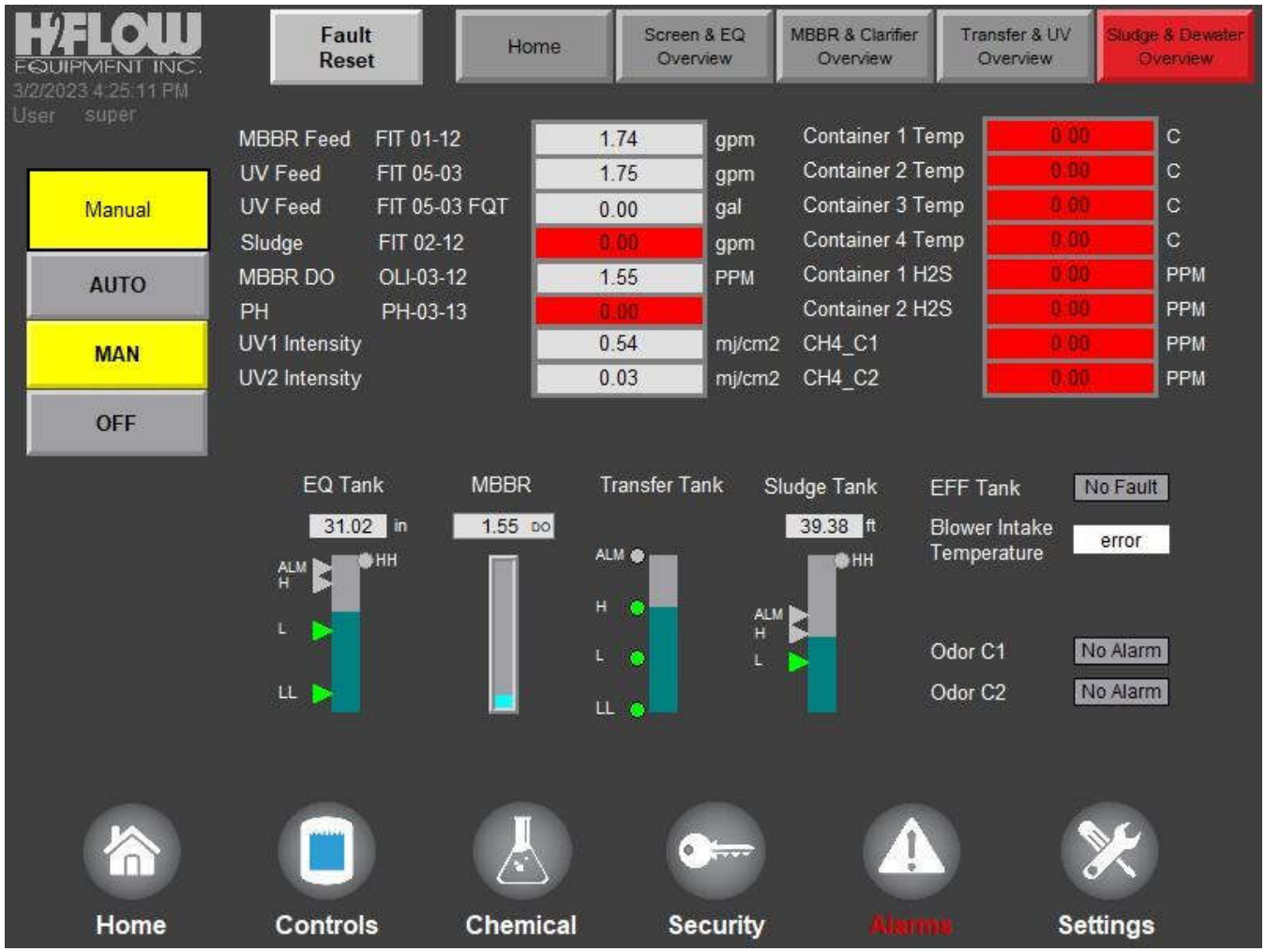

System OFF

The system is off. Equipment will not run or alarm in this state. (Red)

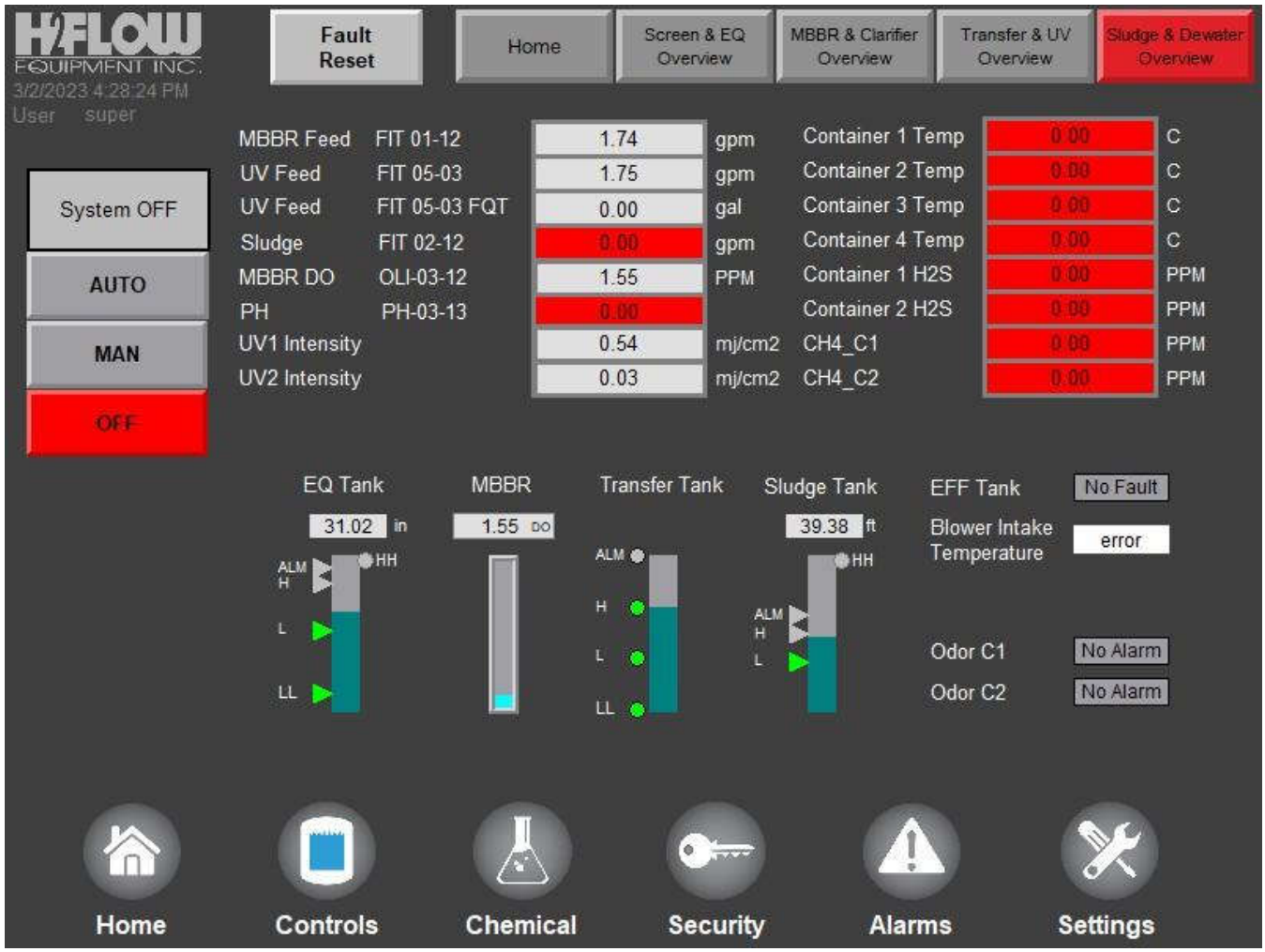

Screen & EQ Overview

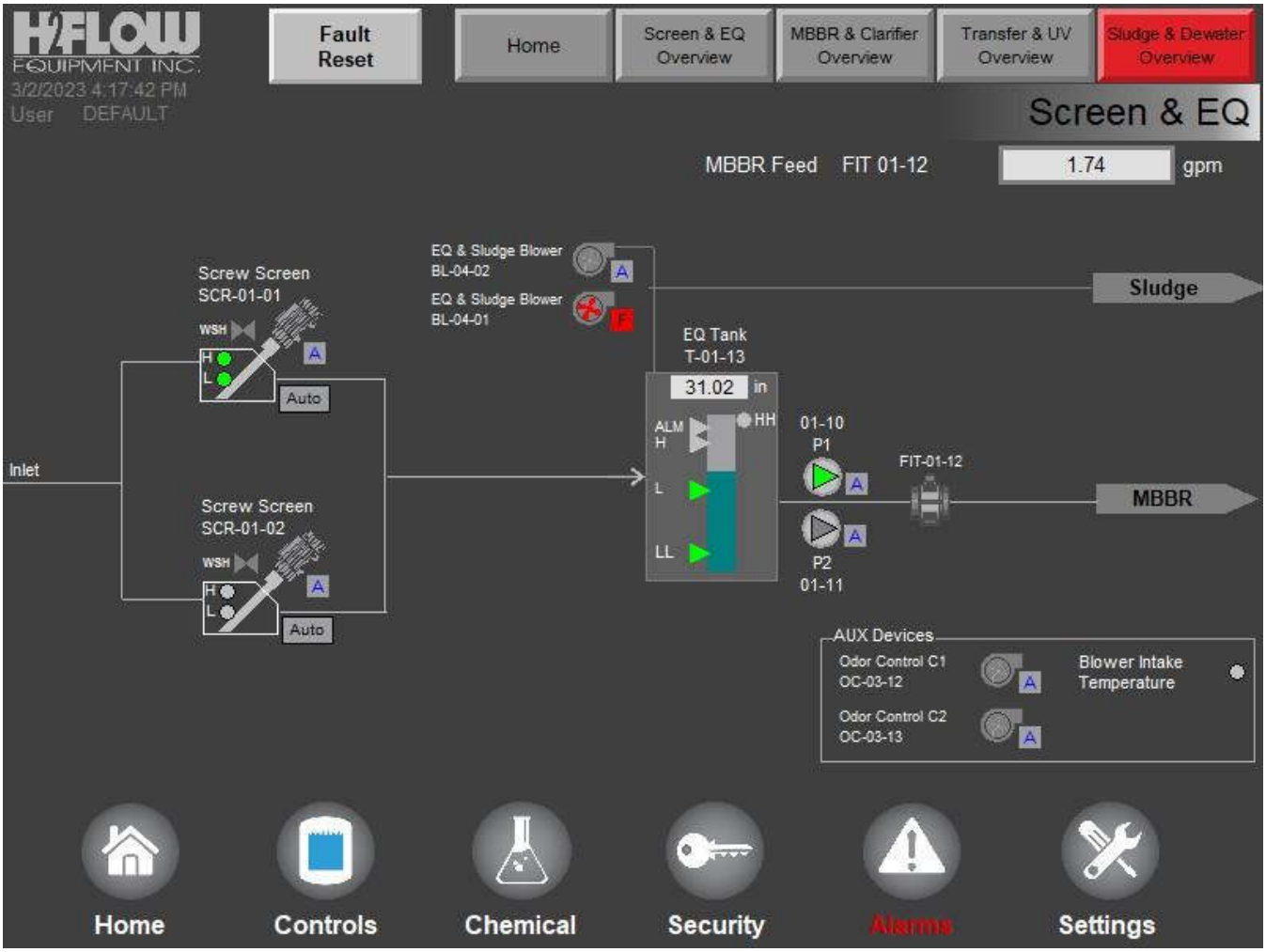

MBBR, Clarifier & Chemical Overview

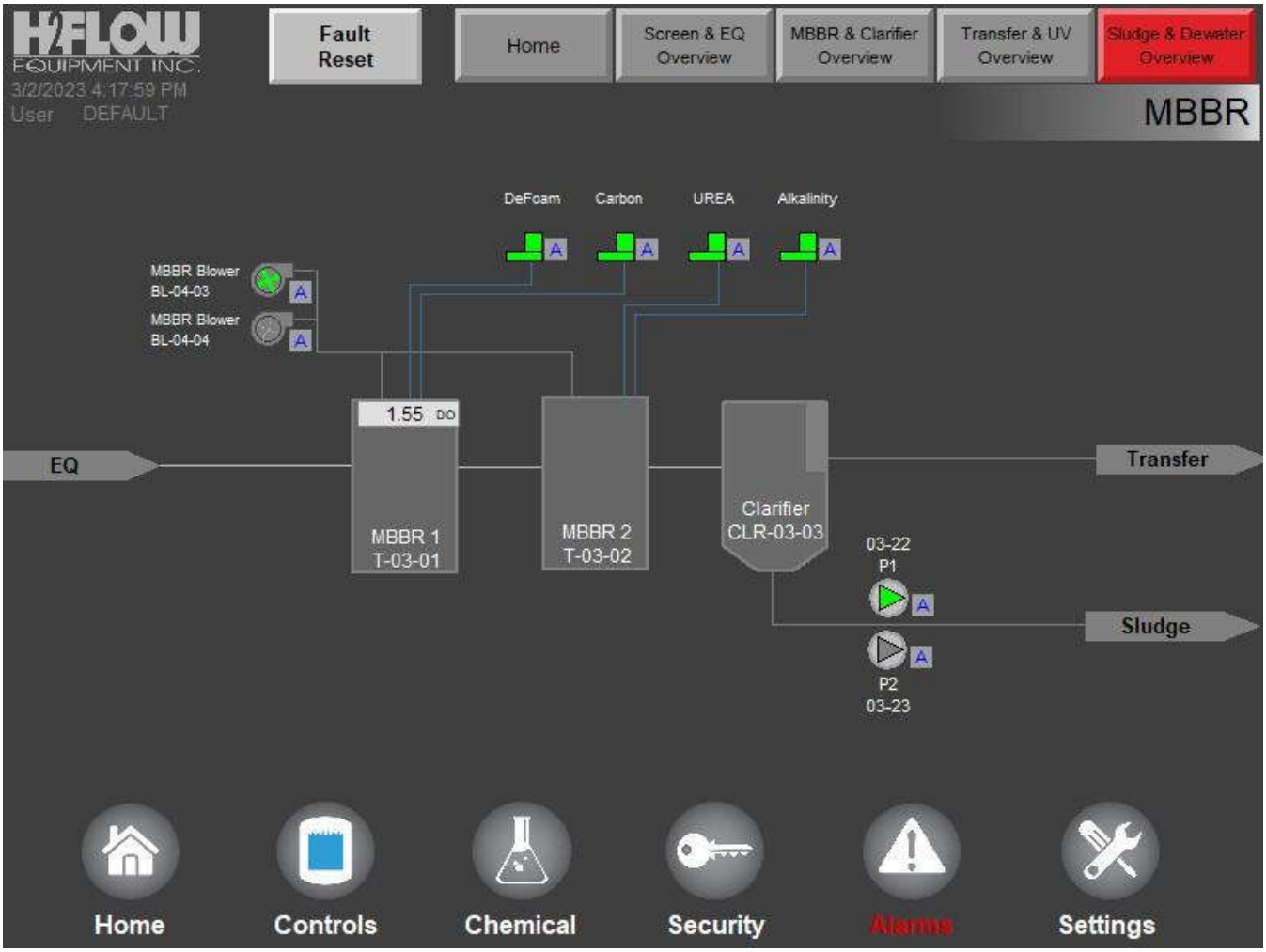

Transfer Tank & UV Overview

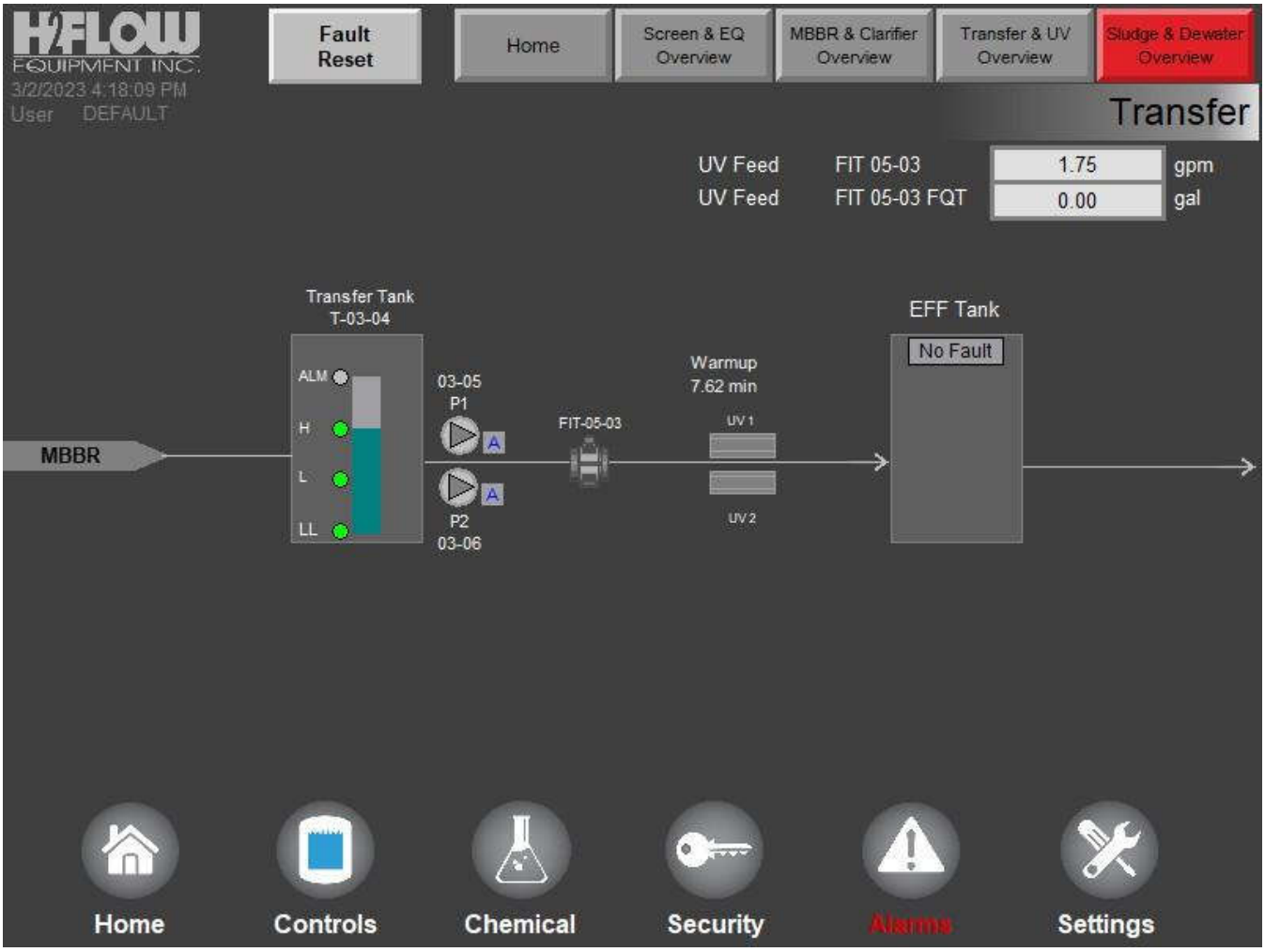

Sludge & Dewater Overview

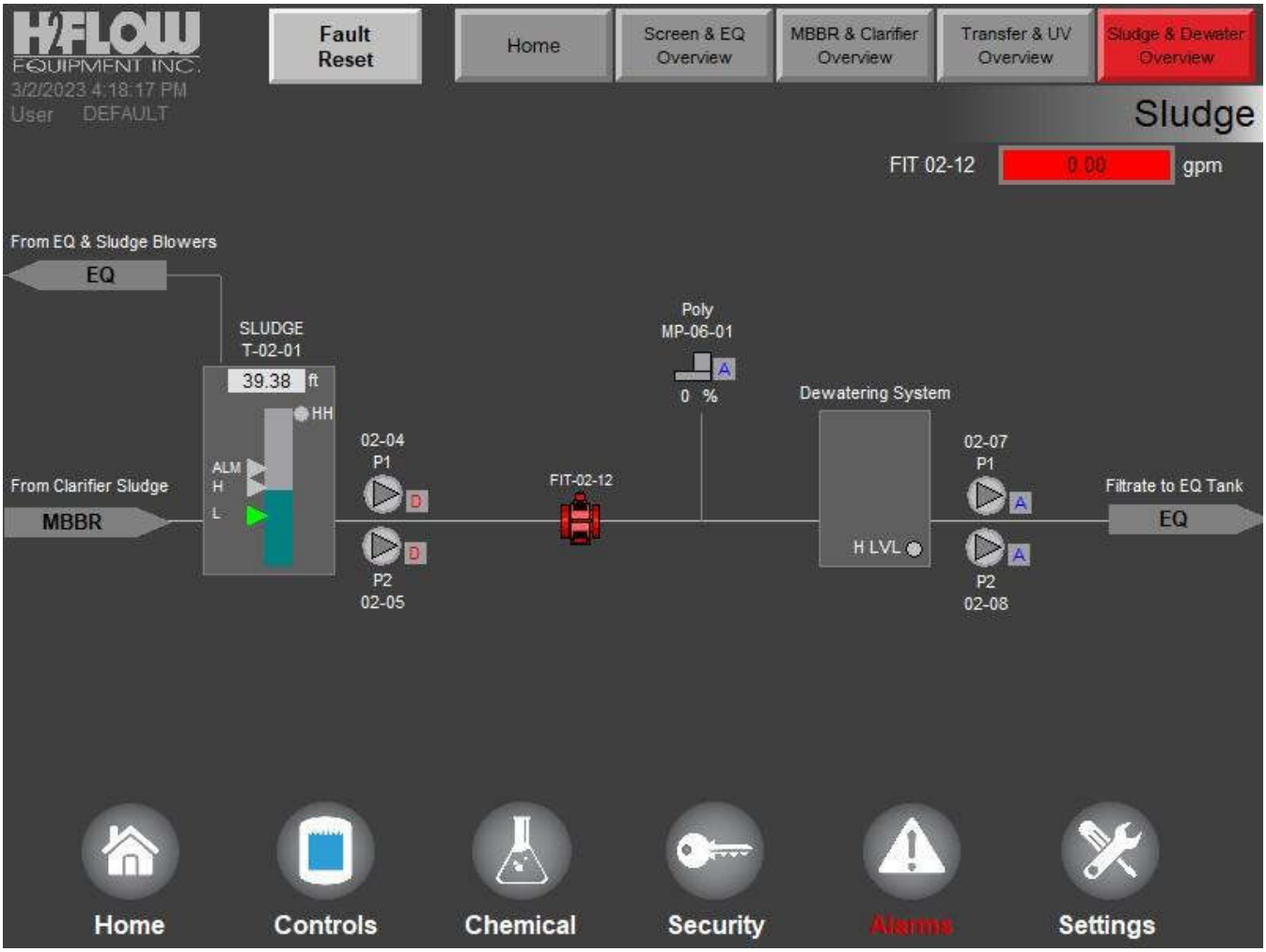

Bypass WWTP overview

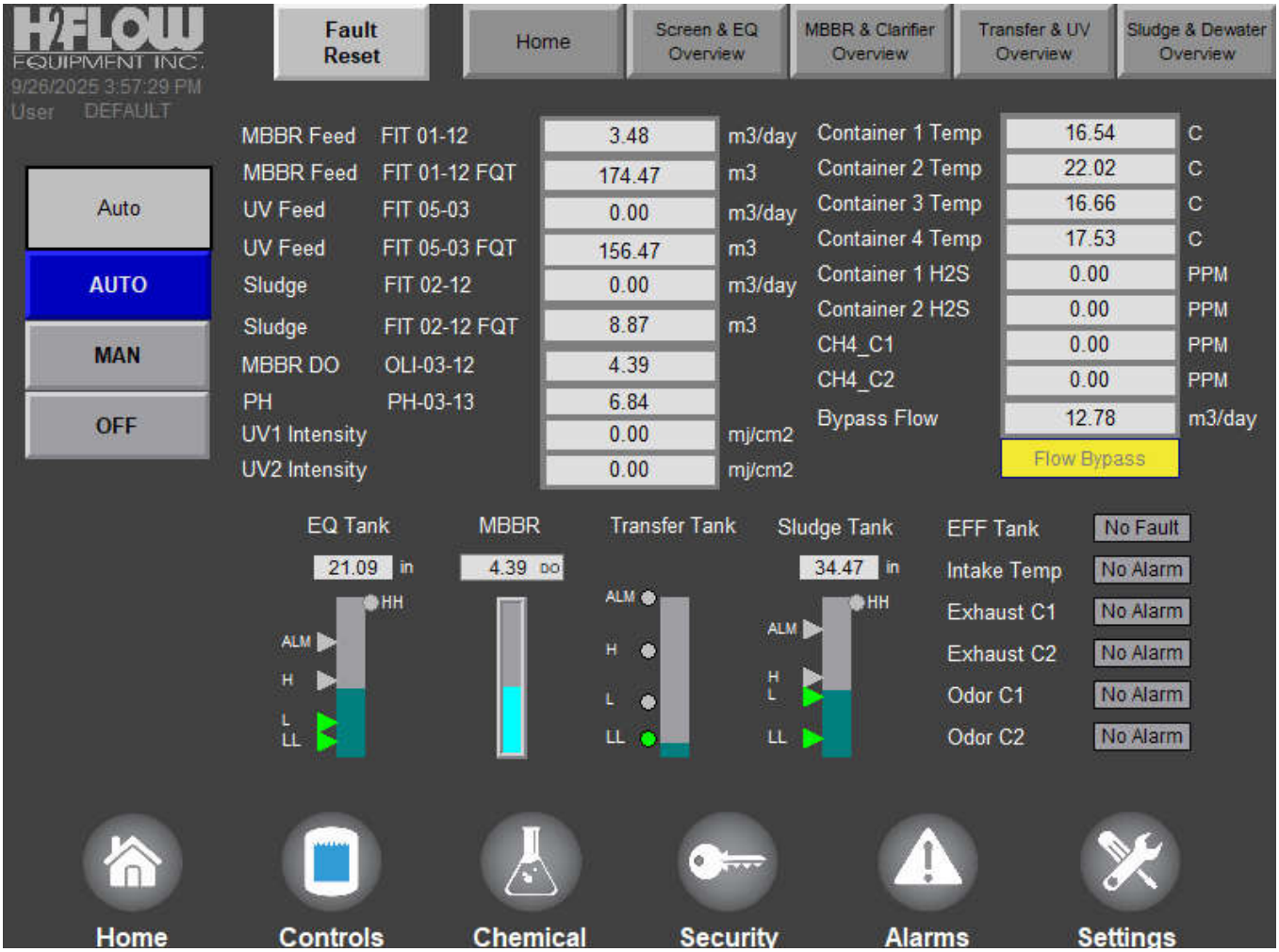

System Controls

Odor Controls

Odor control can be controlled for both containers 1 & 2.

Fan timer settings are located in the timer settings button or navigating through the settings pages using the settings button at the bottom navigation bar.

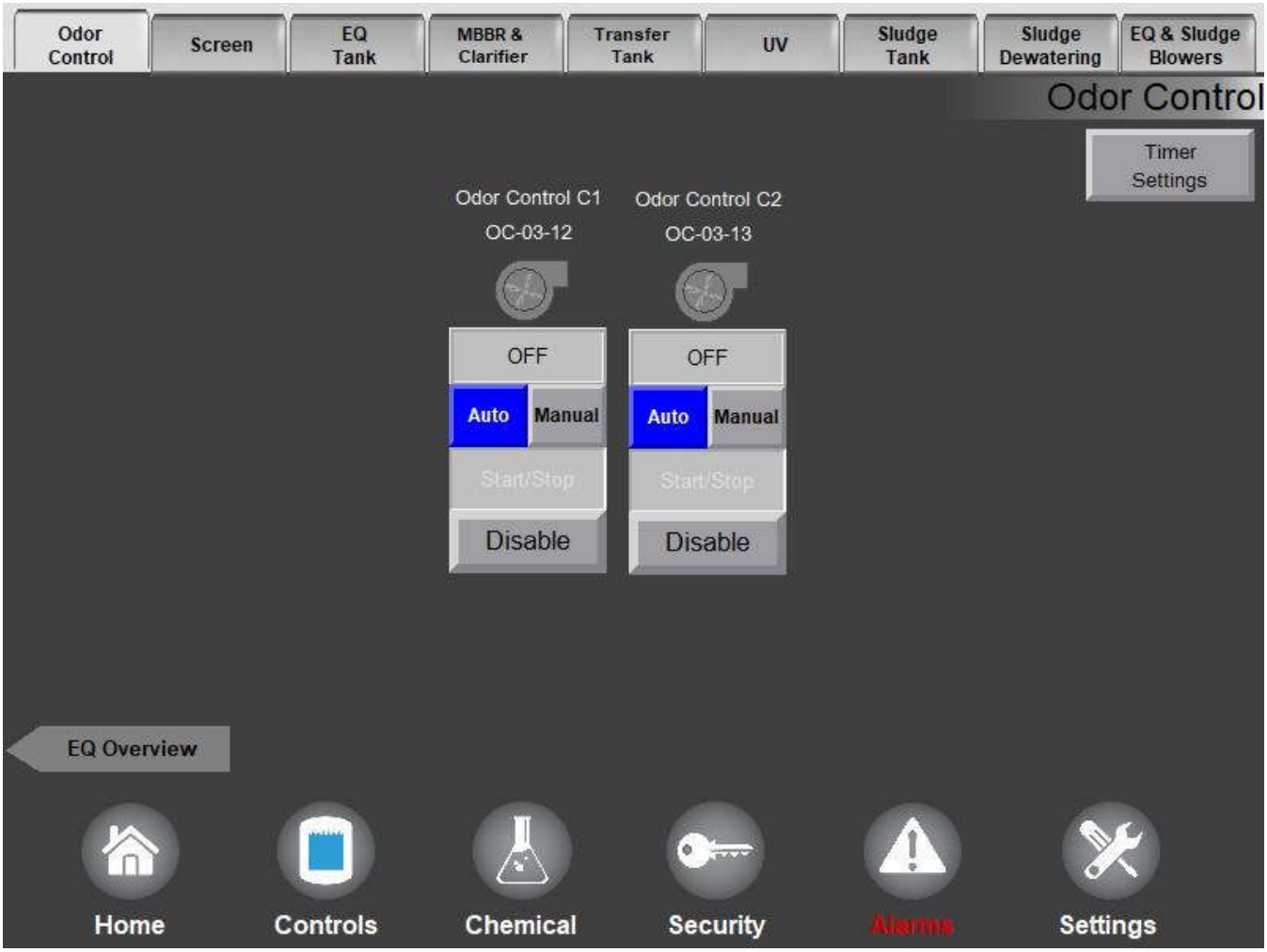

Screen Controls

Screw Screen A & B and screen wash valves can be controlled from this display.

HOA status switch indicates status of the local controls located in the screen room. This is only status and cannot be controlled from the HMI.

High- and Low-level float indicators are located within the screw screen to indicate if the screen is backing up and requires the screw to run. (Grey – Circle indicates the float is not active) (Green – Circle indicates the float is active)

Wash valves will operate based on running status of the screw and timers.

Timer settings are located in the timer settings button or navigating through the settings pages using the settings button at the bottom navigation bar.

Navigation back to the overview can be achieved by pushing the EQ overview or home button

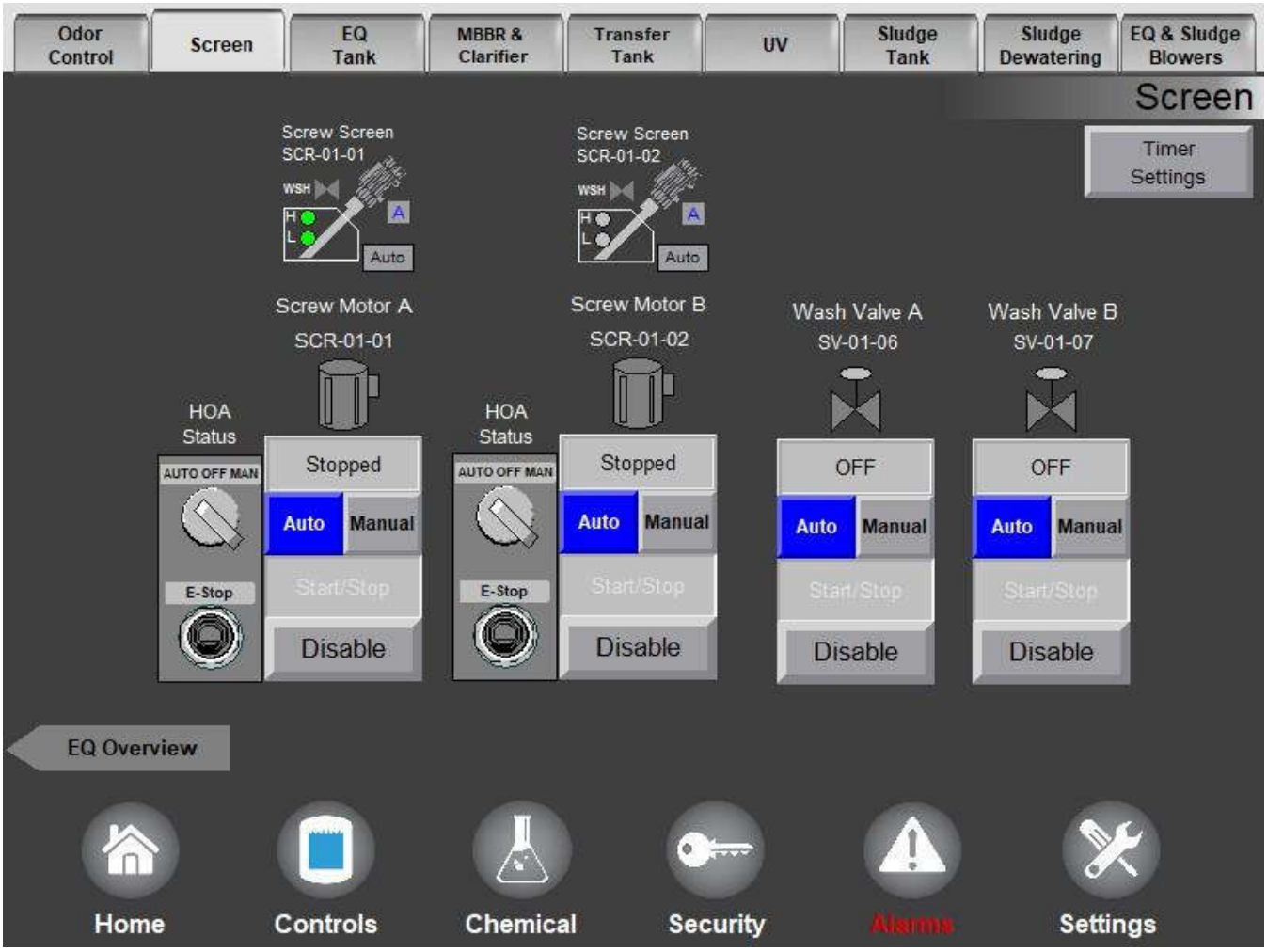

Bypass WWTP Controls

If needed, the wastewater treatment plant can be bypassed as follows (this is performed manually).

Valves (V-01-19/20) are CLOSED, valve (V-01-18) is open bypass the raw wastewater BEFORE the screening.

- If there is enough pressure to send it to the outfall valve (V-03-45) is CLOSED and valve (V-03-44) is open.
- If there is insufficient pressure to send it to the outfall valve (V-03-44) is CLOSED and valve (V-03-45) is open.

Valves (V-01-19/20) are OPEN, valve (V-01-37) is OPEN and valve (V-01-36) is CLOSED bypass the raw wastewater AFTER the screening.

- If there is enough pressure to send it to the outfall valve (V-03-45) is CLOSED and valve (V-03-44) is open.
- If there is insufficient pressure to send it to the outfall valve (V-03-44) is CLOSED and valve (V-03-45) is open.

Once system is in bypass mode than bypass flowmeter (FIT-01-51) will detect flow and you can see on HMI screen (yellow display showing flow bypass will blink)

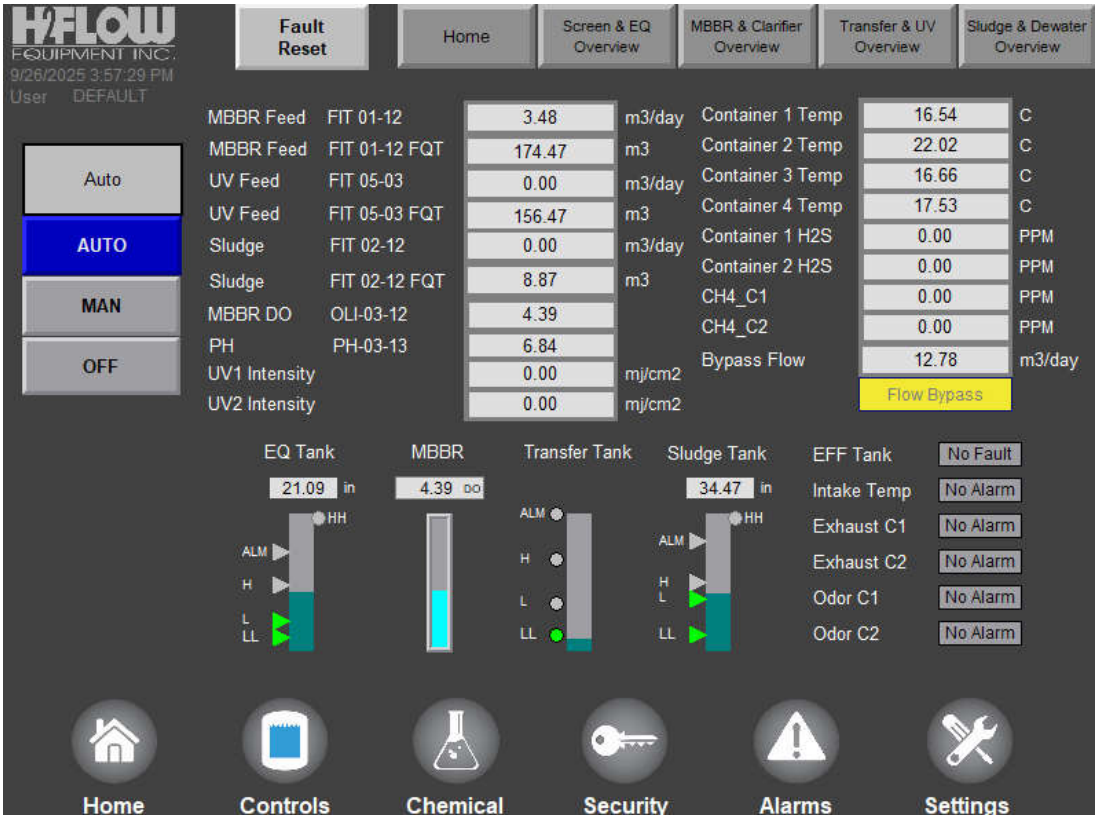

EQ Tank Controls

EQ tank level and MBBR Feed Pump A & B can be controlled from this display.

MBBR Feed Pumps are flow PID controlled. To navigate to pump PID flow settings push the PID Flow settings button.

MBBR Feed Pumps are also duty/standby operation. The pumps will swap duty based on a timer or can swap rotation pushing the swap duty button. Rotation will automatically swap if one pump faults or is disabled.

Navigation back to the overview can be achieved by pushing the EQ overview or home button

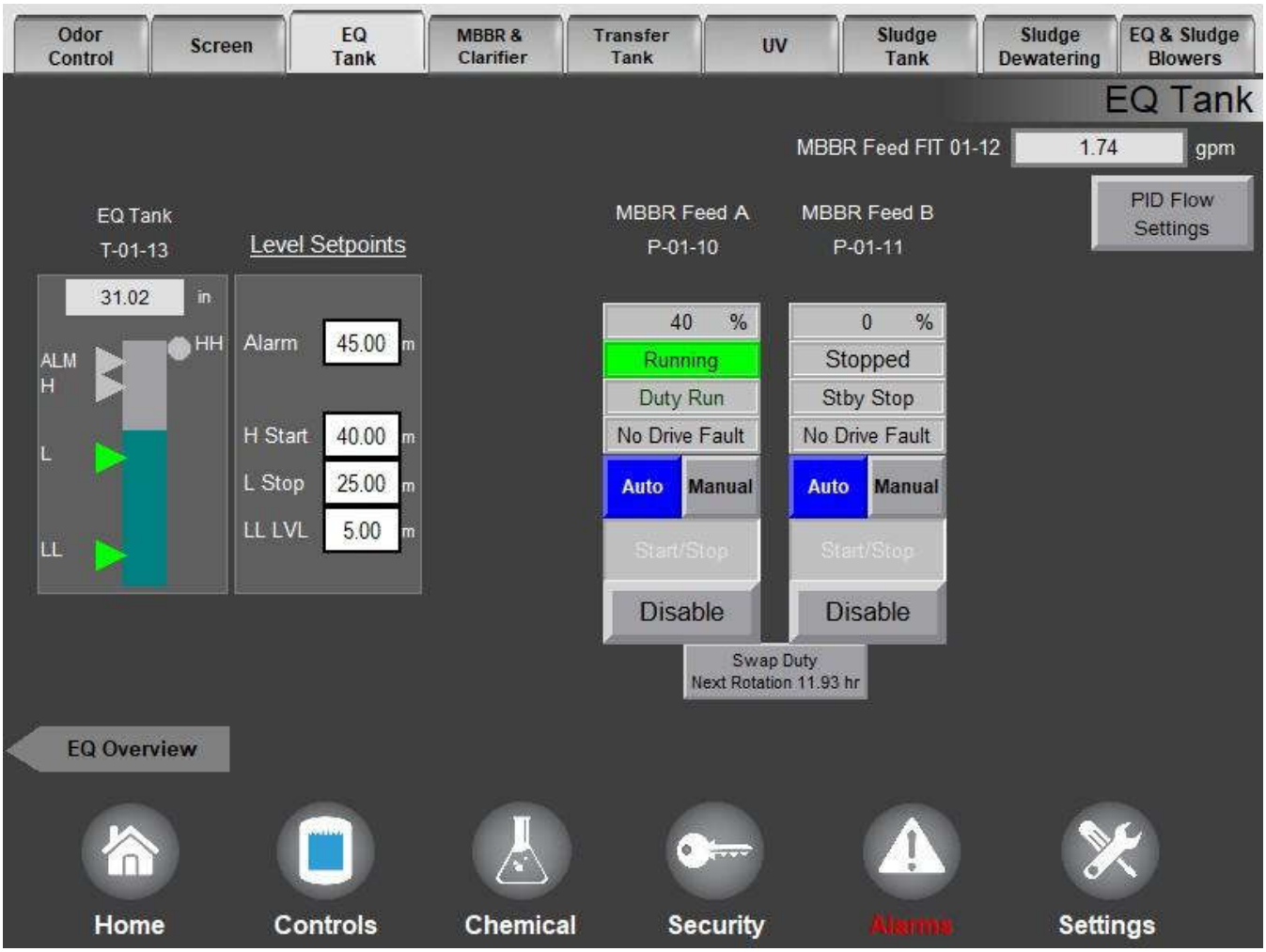

MBBR & Clarifier Controls

MBBR blowers are DO PID controlled. To navigate to DO PID settings push the PID DO PID settings button. There are also additional DO settings associated with the DO controls by pushing the DO Settings button.

MBBR Blowers and Sludge Pumps are duty/standby operation. They will swap duty based on a timer or can swap rotation pushing the swap duty button. Rotation will automatically swap if one faults or is disabled.

Timer settings are located in the timer settings button or navigating through the settings pages using the settings button at the bottom navigation bar.

Navigation back to the overview can be achieved by pushing the MBBR overview or home button

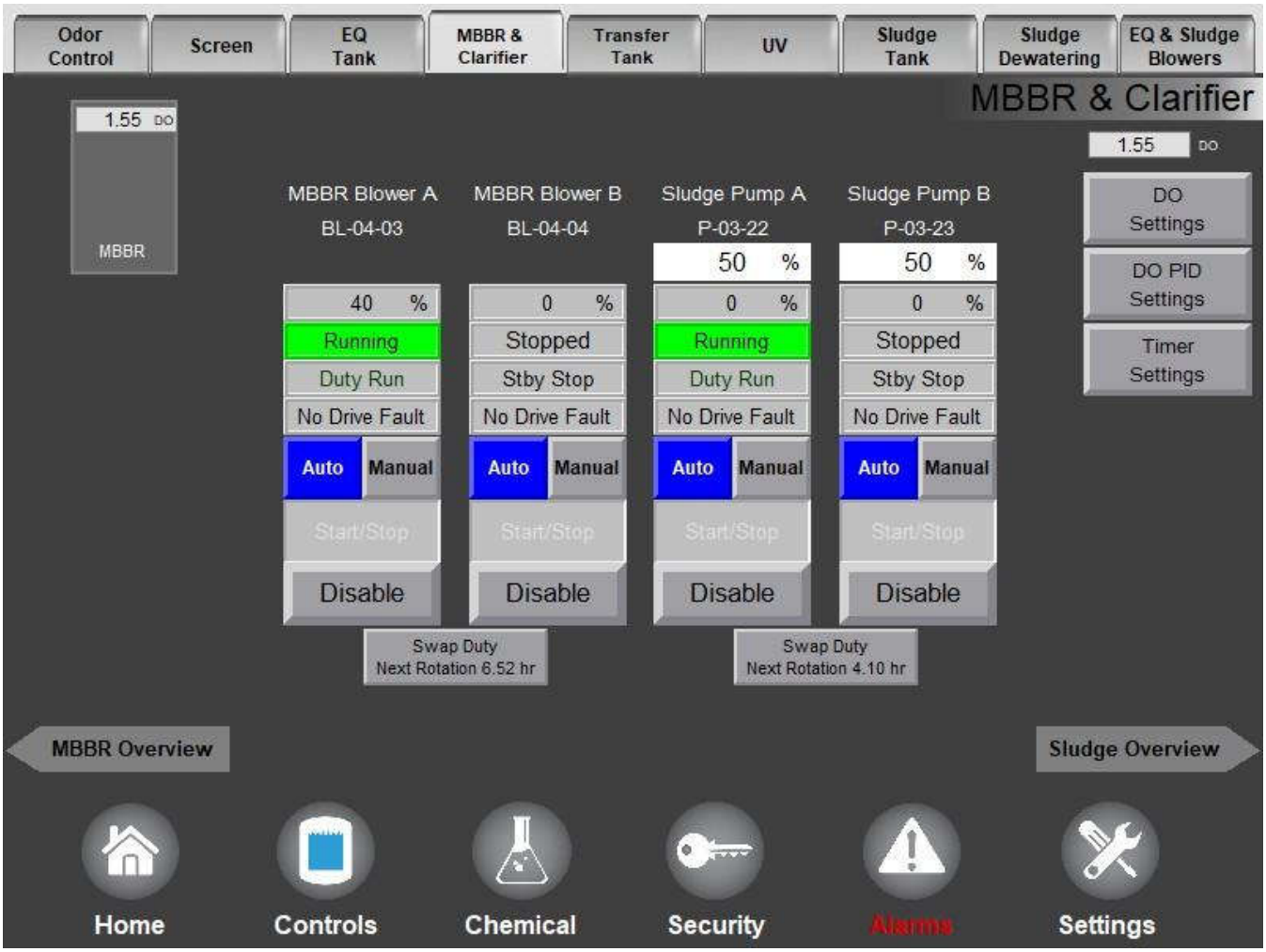

Transfer Tank Controls

Transfer Tank level has float indications. Start and stop of the UV Feed pumps will start at the L – level and Stop at the LL Level

UV feed pumps are flow PID controlled. To navigate to pump PID flow settings push the PID flow settings button.

UV feed pumps are duty/standby operation. They will swap duty based on a timer or can swap rotation pushing the swap duty button. Rotation will automatically swap if one faults or is disabled.

Navigation back to the overview can be achieved by pushing the Transfer overview or home button

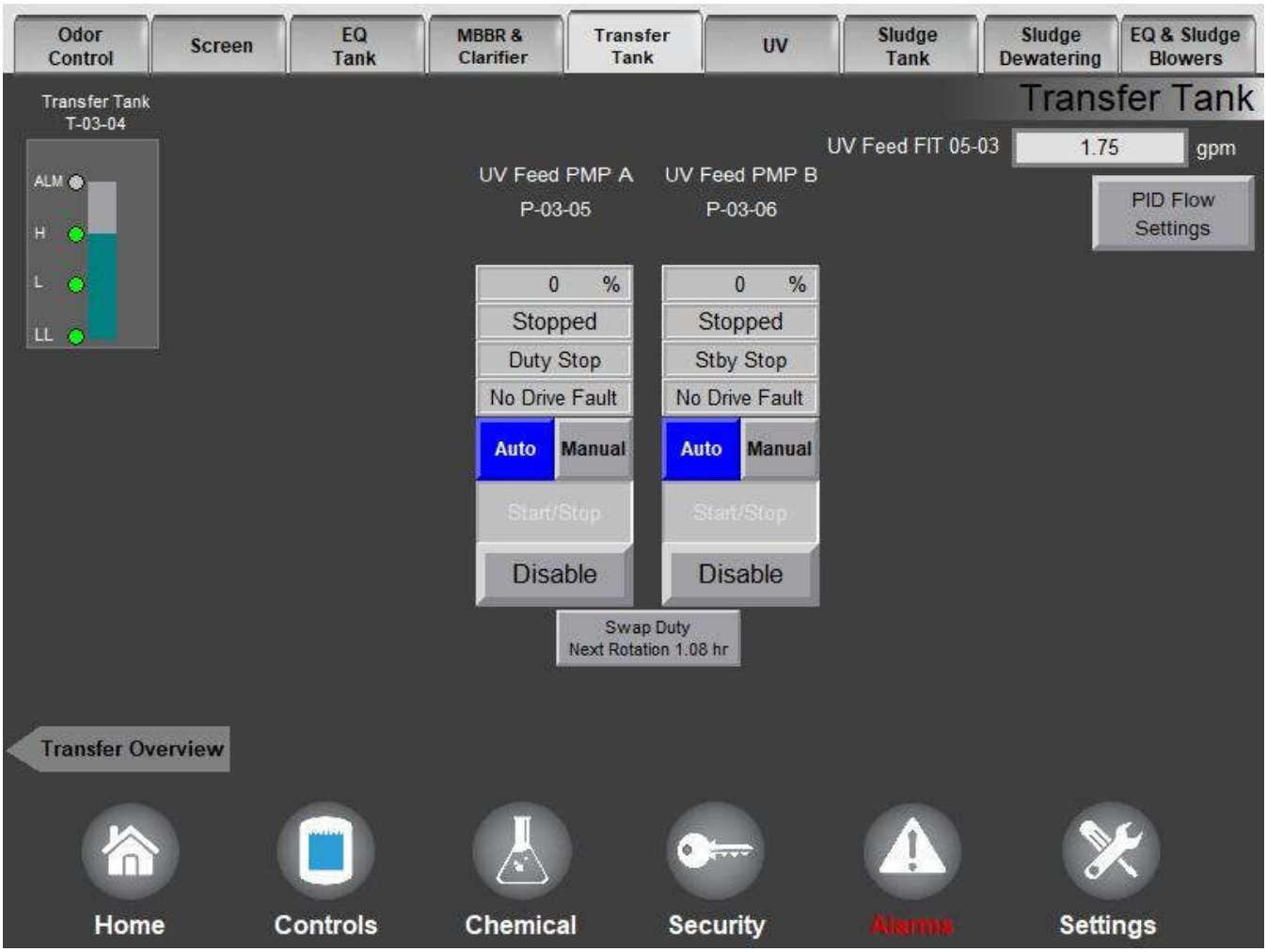

UV Controls

UVs are duty/standby operation. They will swap duty based on a timer or can swap rotation pushing the swap duty button. Rotation will automatically swap if one faults or is disabled.

UVA and UVB have individual settings and can be located using the UVA and UVB settings button.

Timer settings are located in the timer settings button or navigating through the settings pages using the settings button at the bottom navigation bar.

Navigation back to the overview can be achieved by pushing the Transfer overview or home button

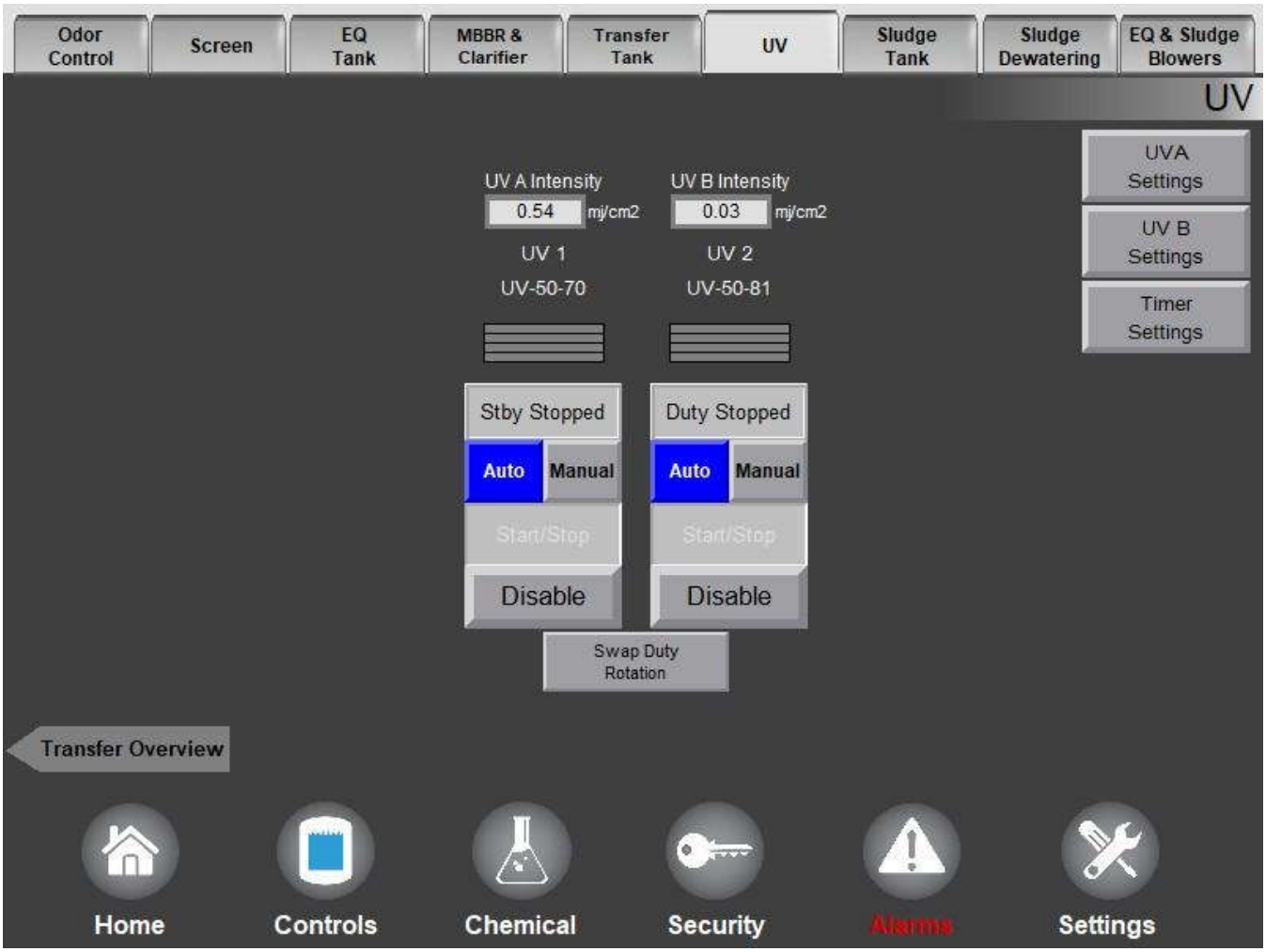

Sludge Tank Controls

Sludge level and sludge transfer Pump A & B can be controlled from this display.

Sludge Pumps are flow PID controlled. To navigate to pump PID flow settings push the PID Flow settings button.

Sludge Pumps are also duty/standby operation. The pumps will swap duty based on a timer or can swap rotation pushing the swap duty button. Rotation will automatically swap if one pump faults or is disabled.

Navigation back to the overview can be achieved by pushing the sludge overview or home button

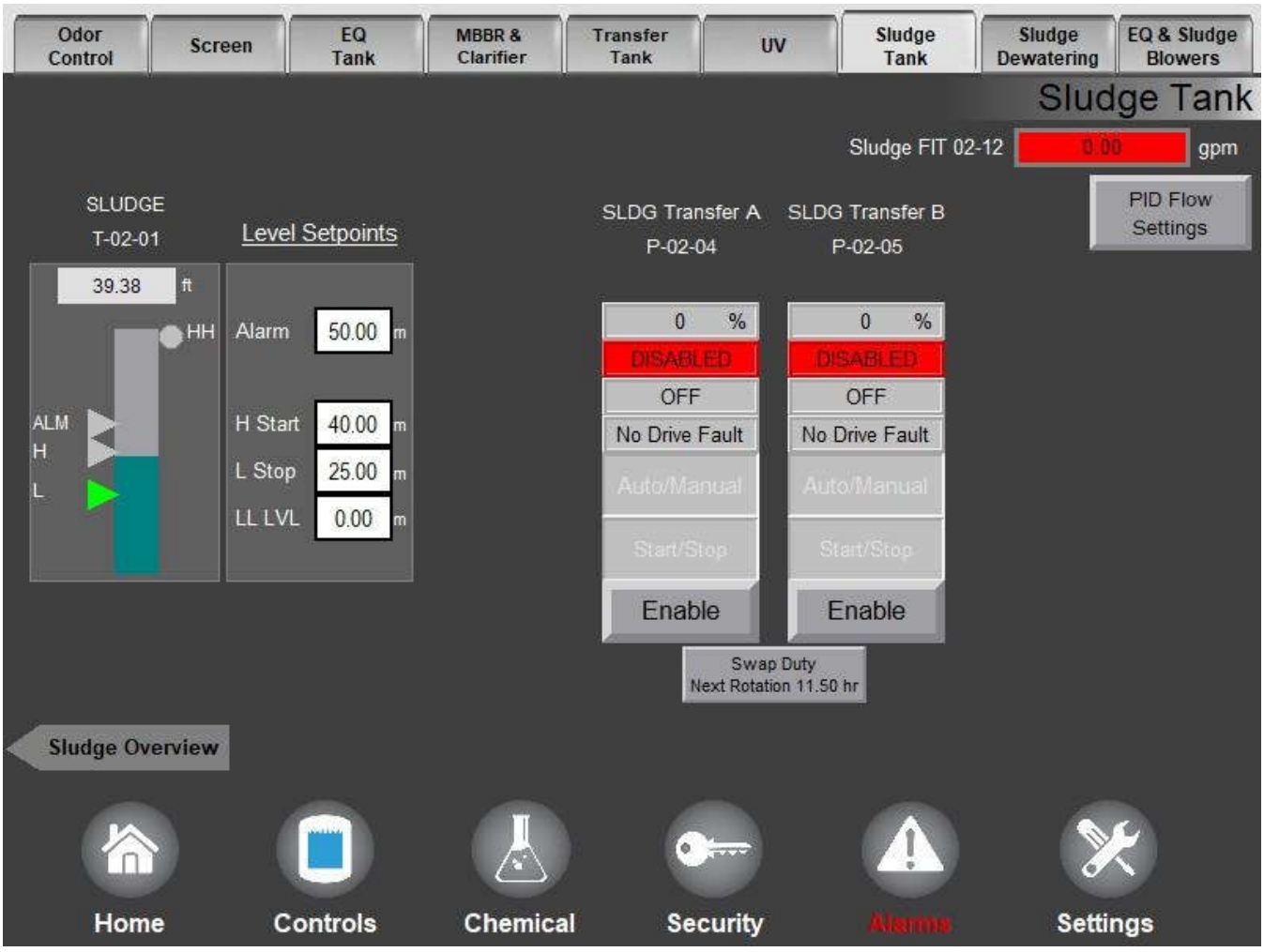

Dewatering Tank Controls

Dewatering level indicates if the dewatering filter system has water. Pumps will operate and stay ON for x amount of time. Timer settings are located in the timer settings button or navigating through the settings pages using the settings button at the bottom navigation bar.

Sludge Dewatering Pump A & B can be controlled from this display.

Sludge Pumps are also duty/standby operation. The pumps will swap duty based on a timer or can swap rotation pushing the swap duty button. Rotation will automatically swap if one pump faults or is disabled.

Navigation back to the overview can be achieved by pushing the sludge overview or home button

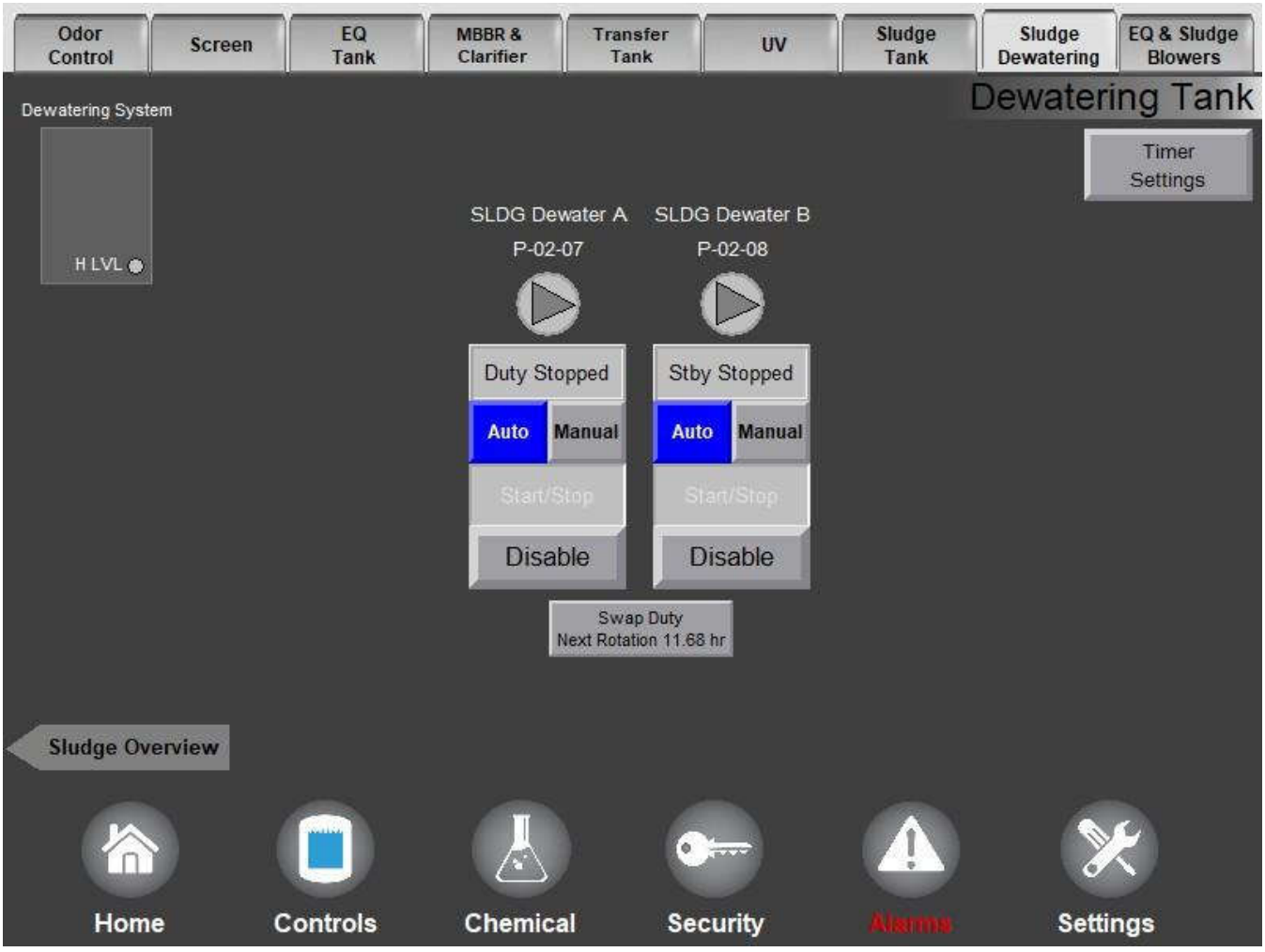

EQ Blower & Sludge Blower Controls.

EQ Blower & Sludge Blower are duty/standby operation. They will swap duty based on a timer or can swap rotation pushing the swap duty button. Rotation will automatically swap if one faults or is disabled.

Timer settings are located in the timer settings button or navigating through the settings pages using the settings button at the bottom navigation bar.

Navigation back to the overview can be achieved by pushing the EQ overview or home button

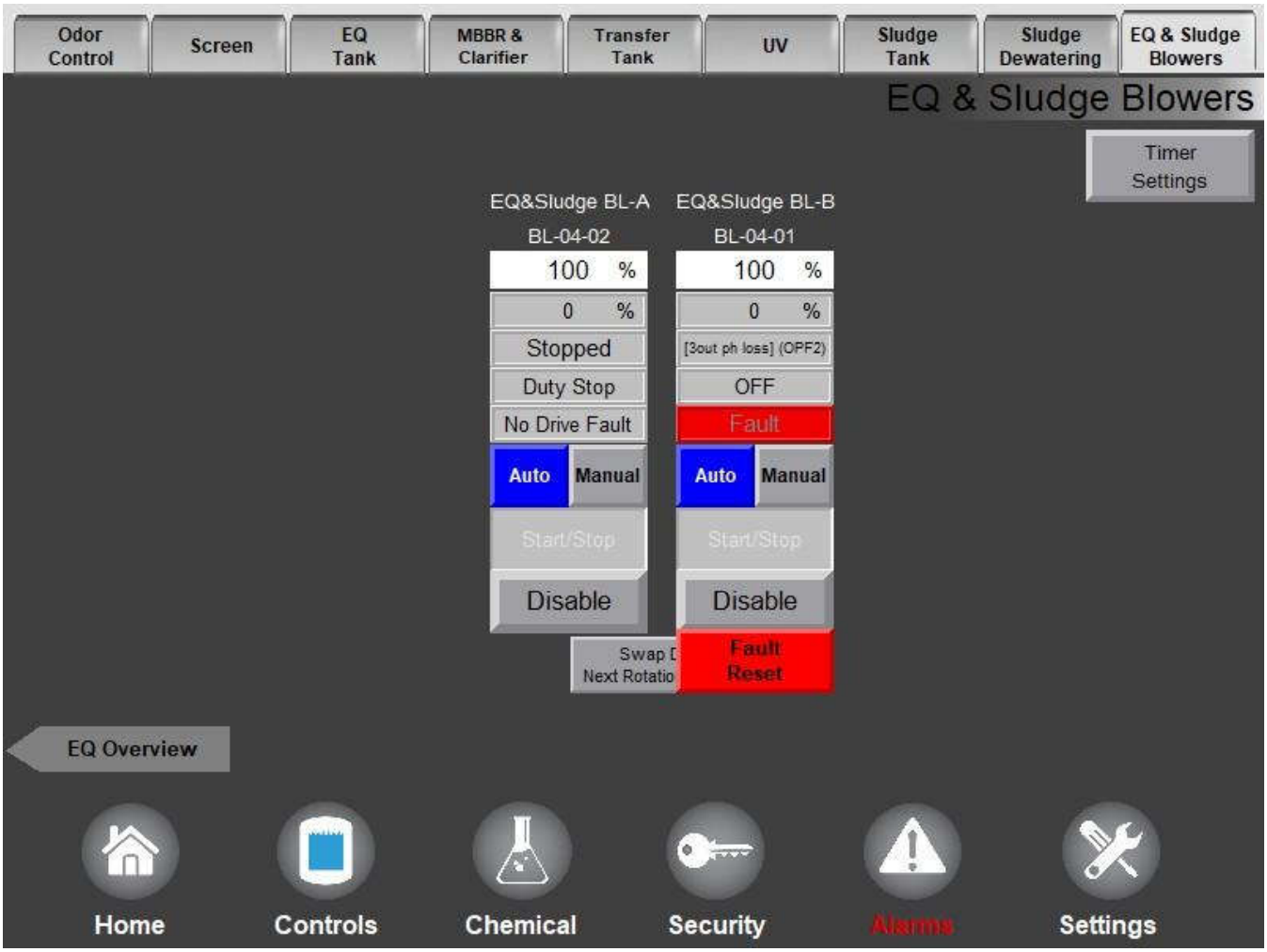

Chemical Dosing

Chemical pumps can be operated from this display.

Control of the pumps can be changed using the button located above the pumps. The different modes are as follows. (Proportional with flow) (Manual Speed) (PID Controlled)

Pump speeds will display as L/H and percentage

PPM (mg/L) can be adjusted for each pump. Additional dosing settings are located on the chemical settings display.

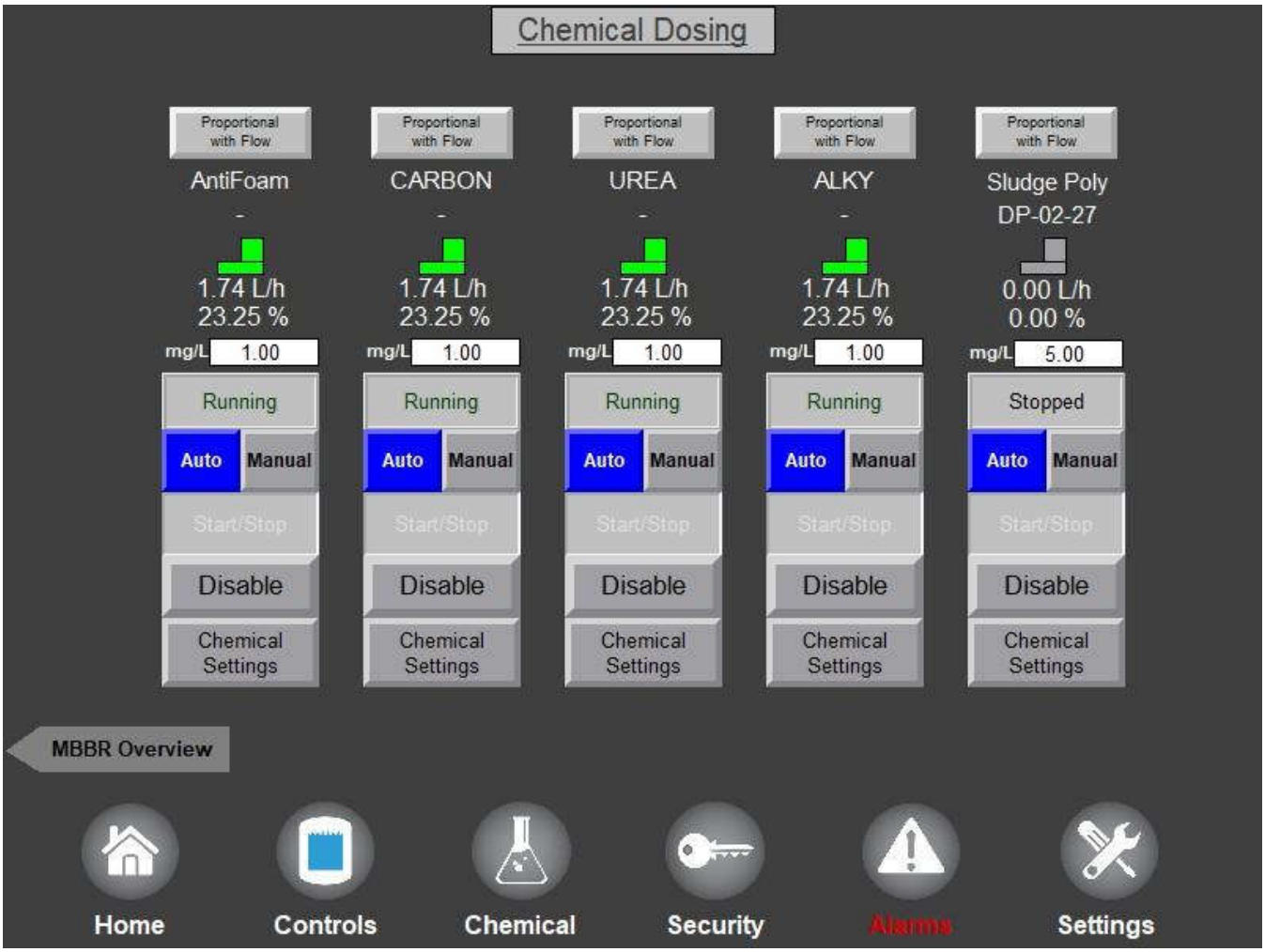

Settings

Settings Home

Settings Home – The user can adjust the time or Exit the runtime project.

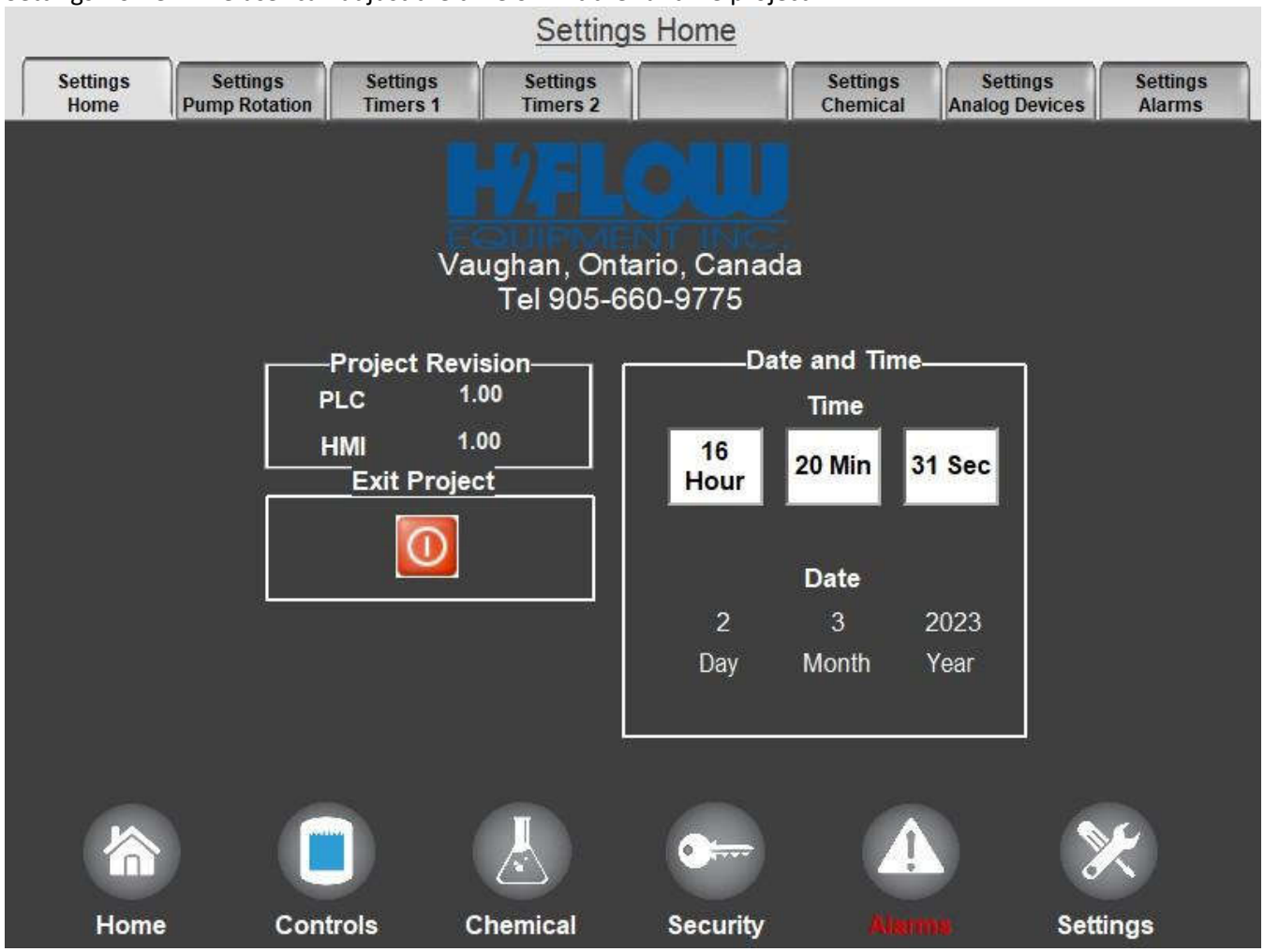

Settings Pump Rotation

Rotation of all duty/standby pumps and blower timers can be adjusted on this display.

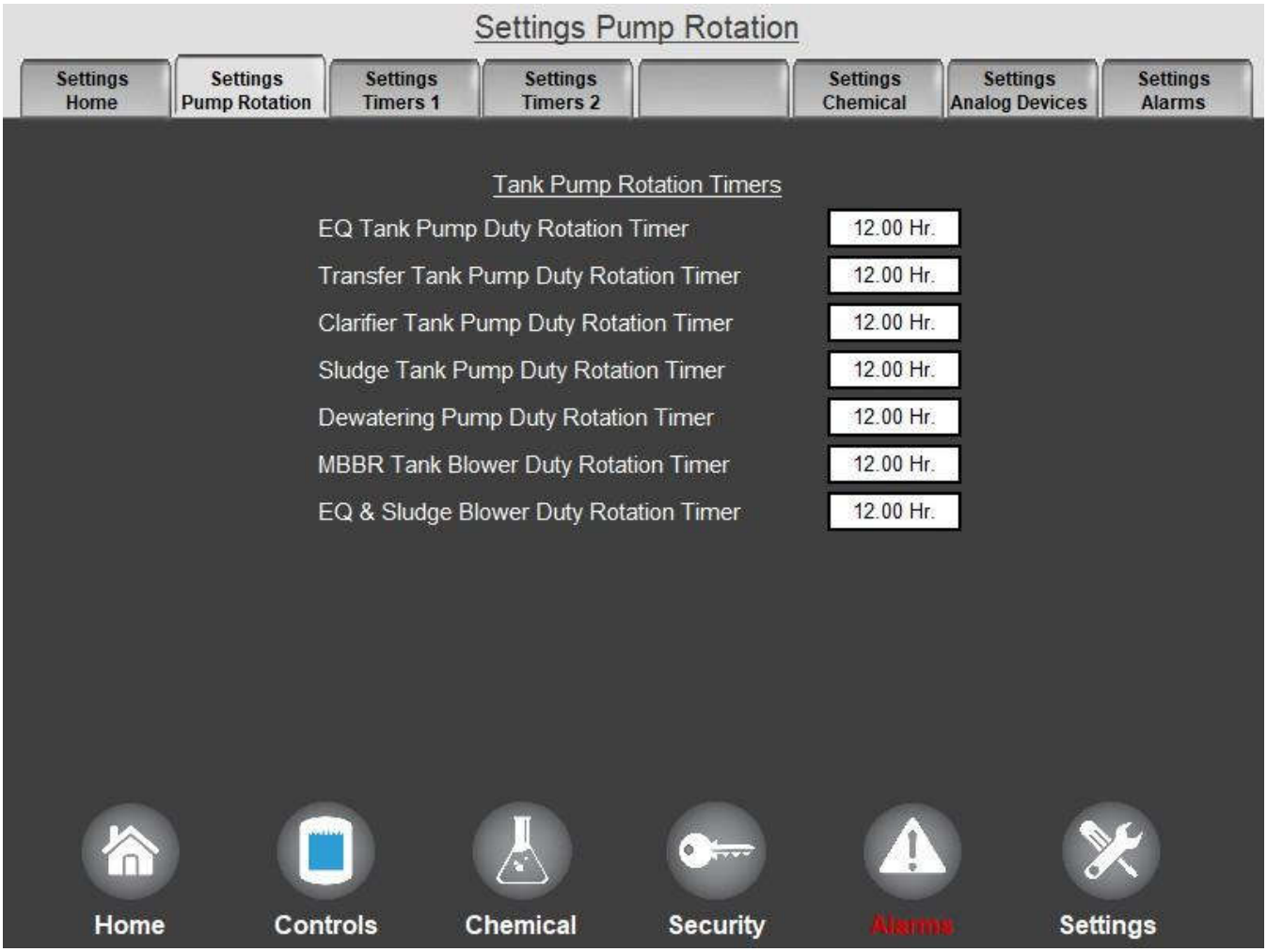

Settings Timers 1

Screw Screen A & B are operated with the same timer. Delay start screen when a start condition is given.

Wash A & B are operated with the same timer. Time ON and Time OFF can be adjusted. Wash valve shutdown time ON will leave the wash valves ON for x amount of time after the stop condition.

UV warmup time and shutdown time can be adjusted.

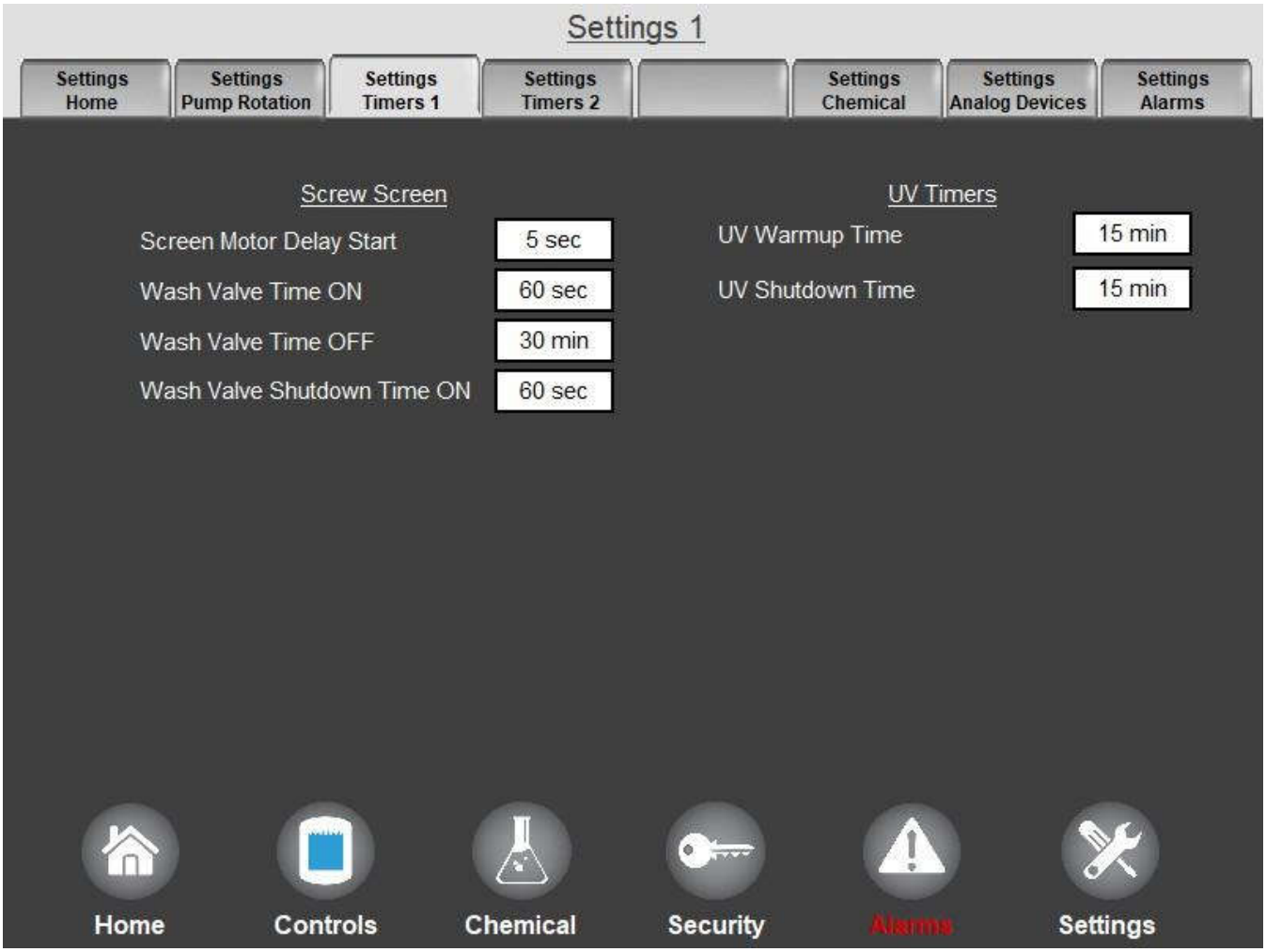

Settings Timers 2

All pumps and blower timers can be adjusted on this display.

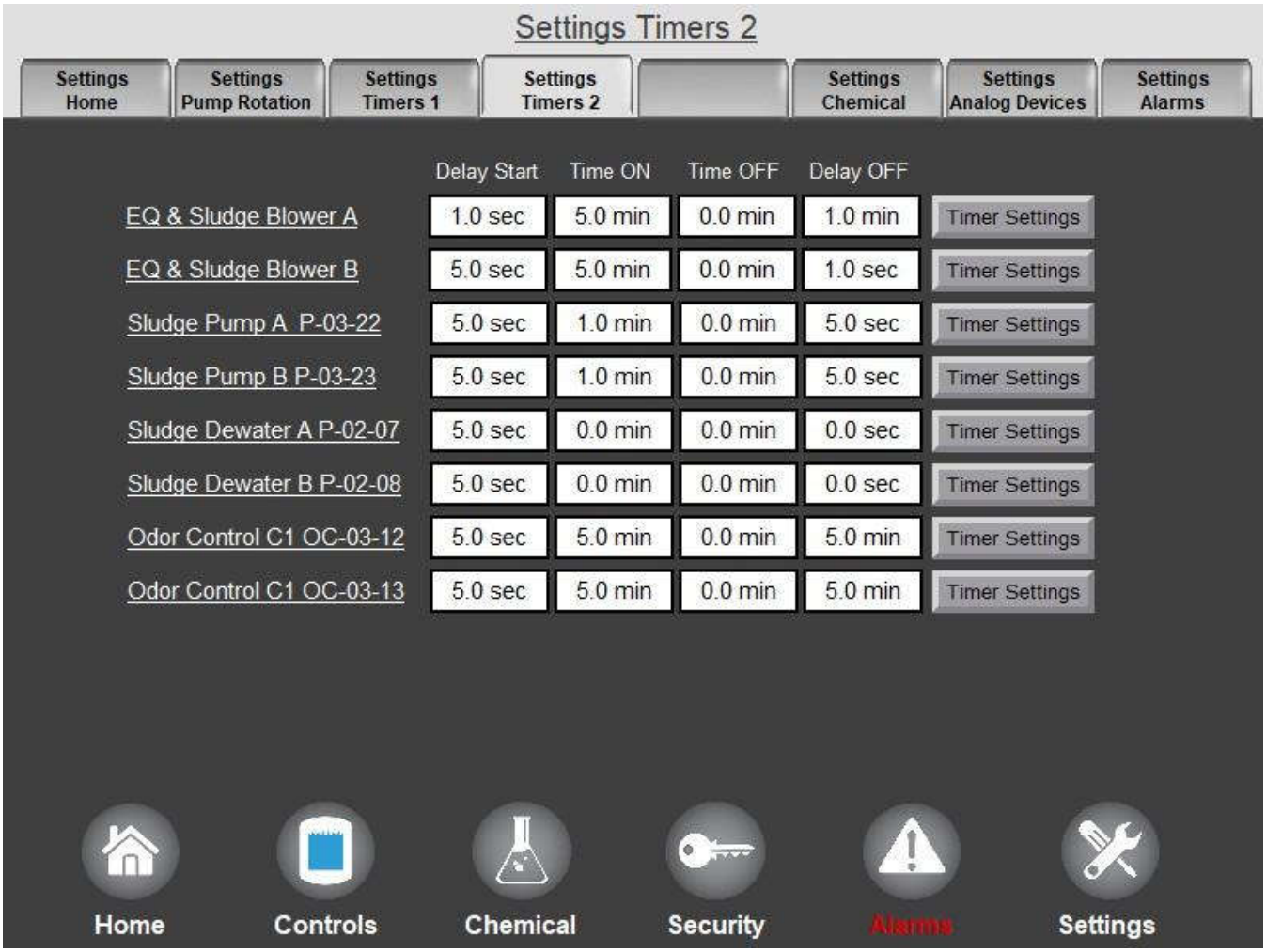

Pushing the Timer settings button will allow you to adjust if the timer is in sec/min/hours



Settings Chemicals

Chemical pump settings can be adjusted. This will adjust the chemical dosing rates according to flow/ pump sizing and chemical concentration.

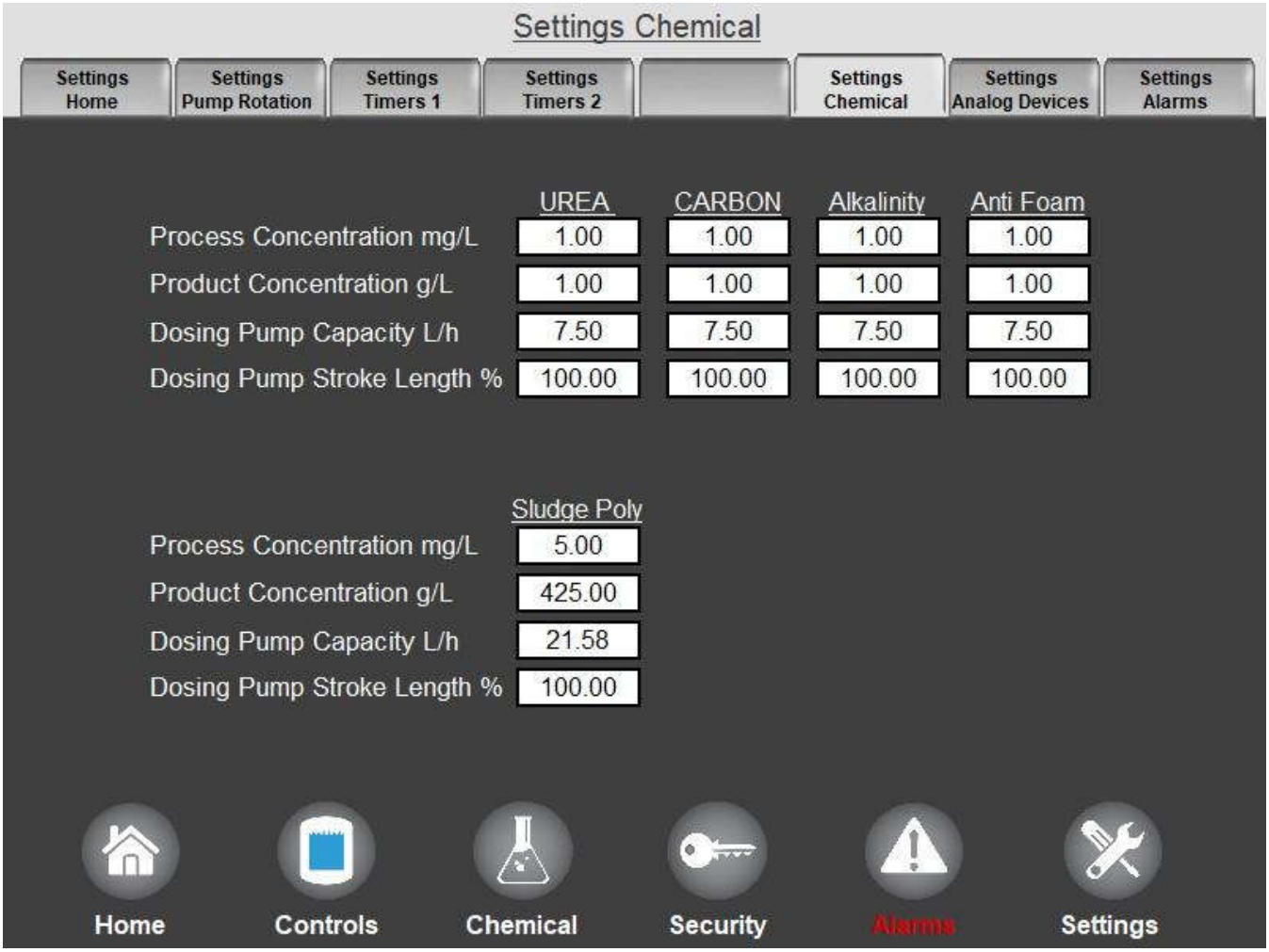

Settings Analog Scaling

Analog settings and alarms can be adjusted by pushing on the corresponding device.

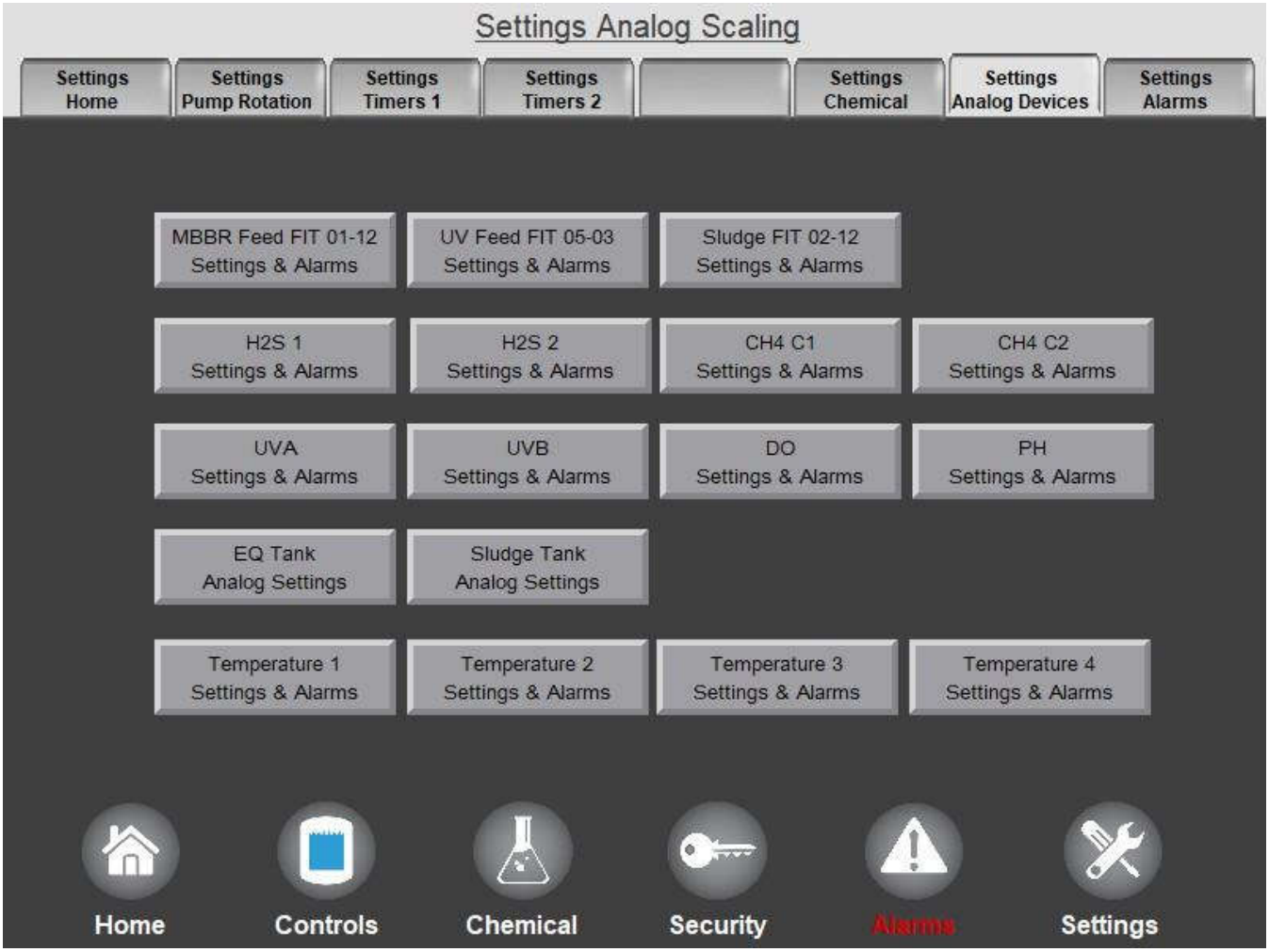

Settings Analog Scaling

Flow meters



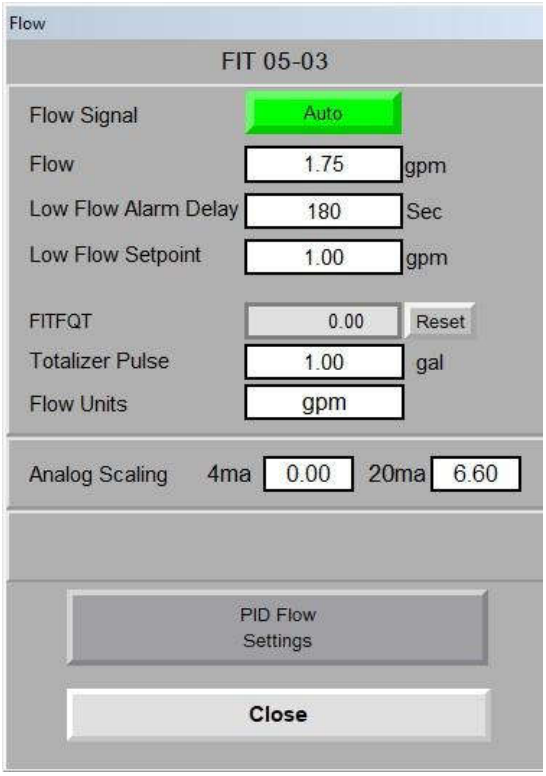

HS2 & CH4 sensors

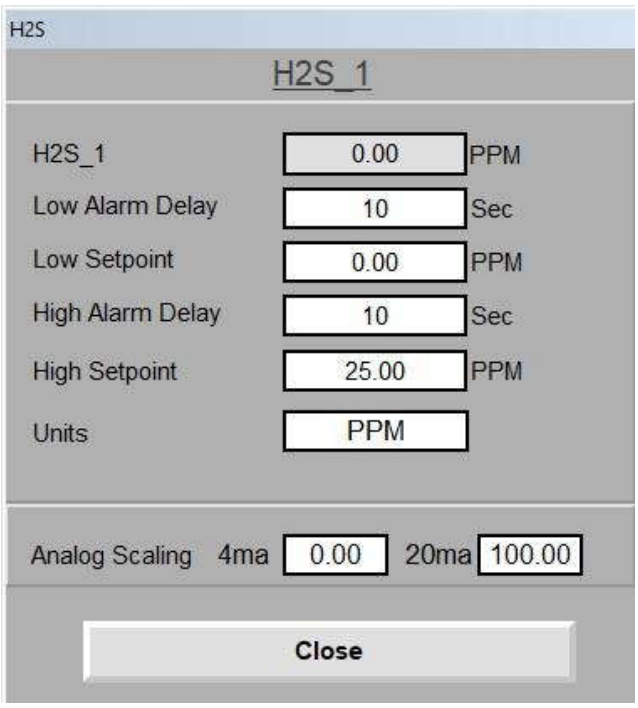

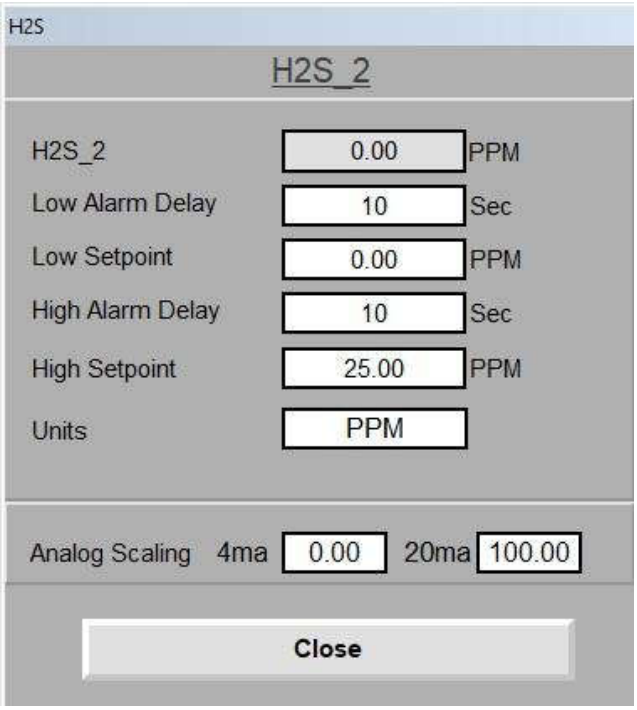

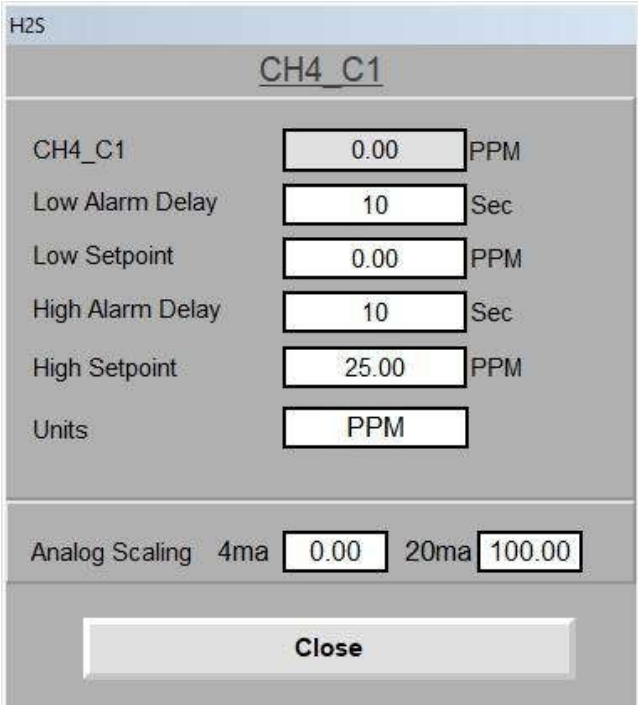

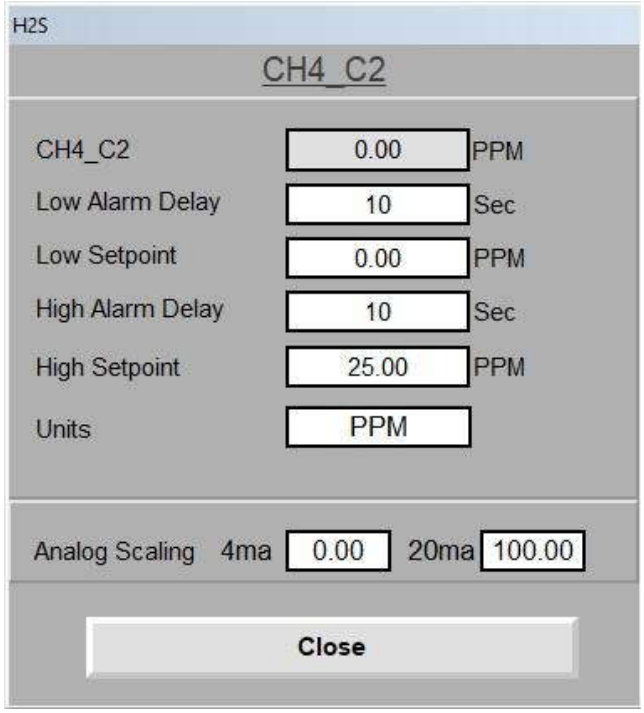

UV & DO & pH sensors

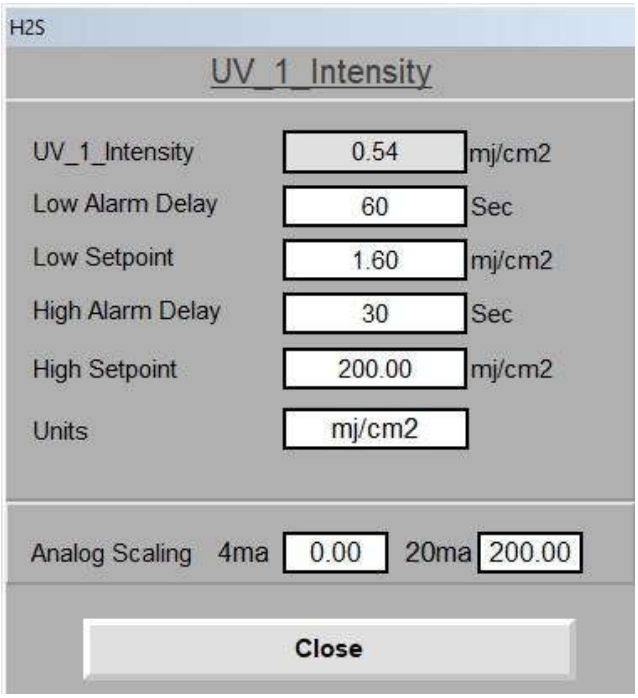

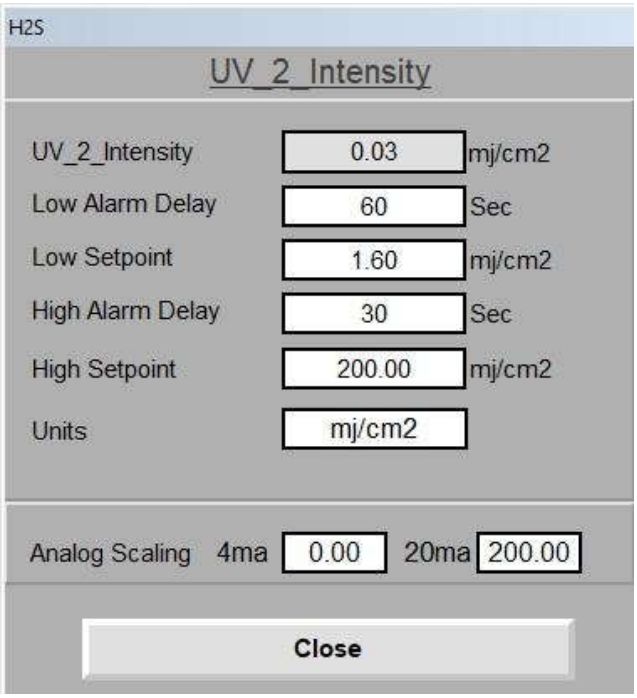

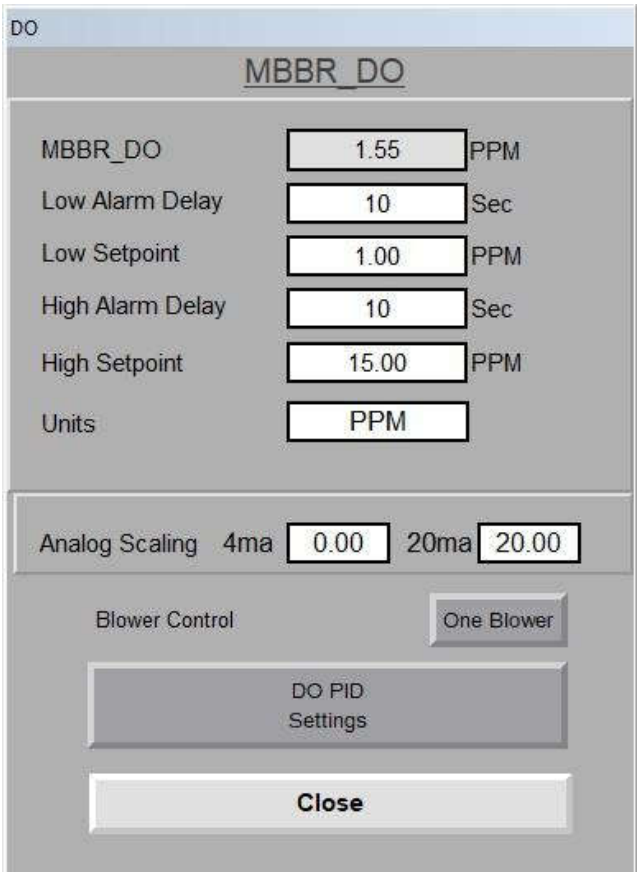

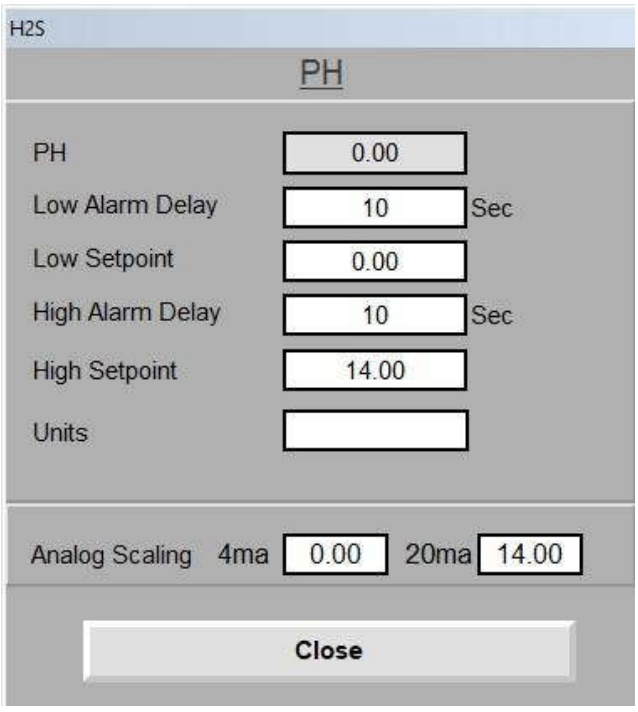

Tanks & Temperature sensors



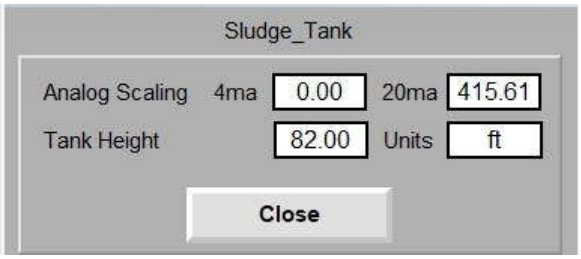

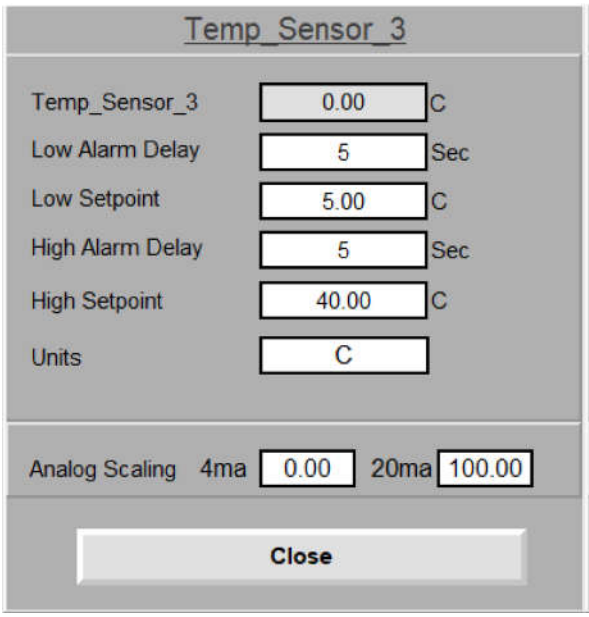

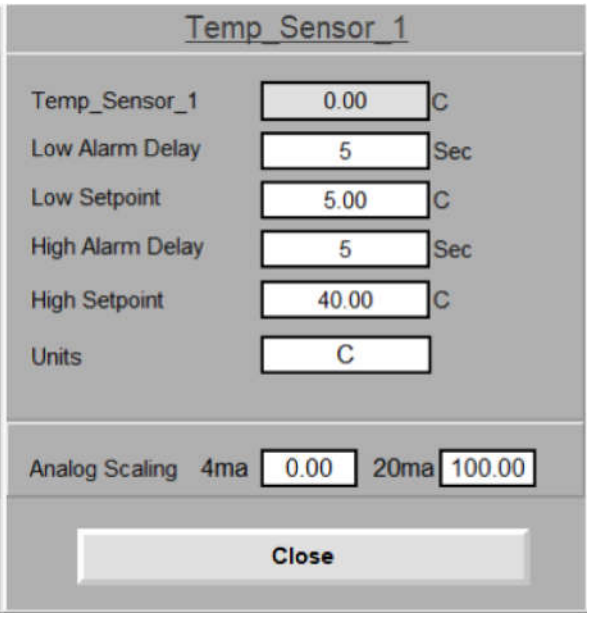

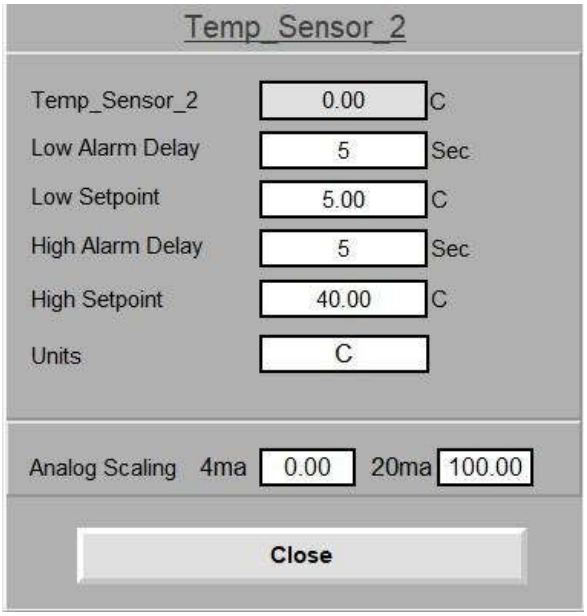

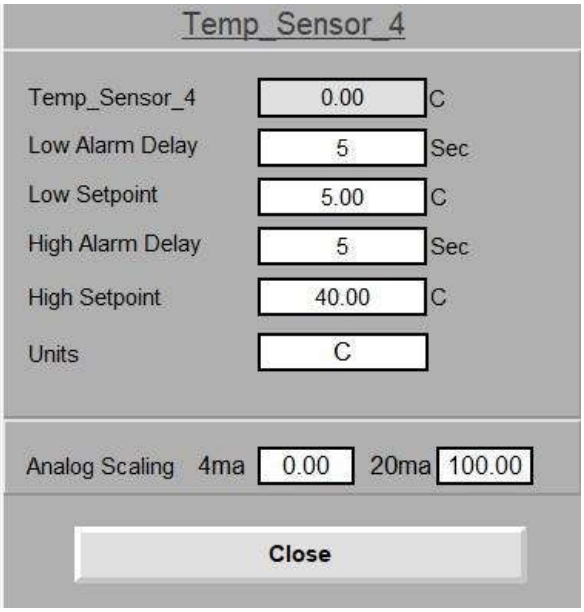

PID Flow & DO

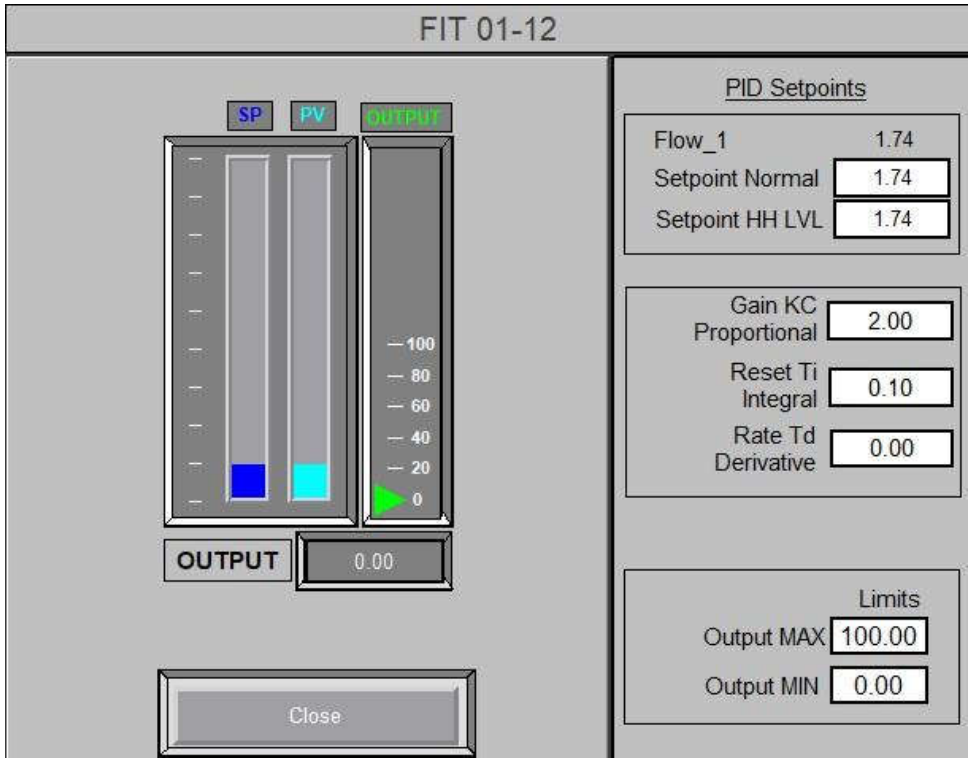
FIT 01-12
SP
PV
OUTPUT
100
80
60
40
20
0
OUTPUT
0.00
Close
PID Setpoints
Flow_1
1.74
Setpoint Normal
1.74
Setpoint HH LVL
1.74
Gain KC Proportional
2.00
Reset Ti Integral
0.10
Rate Td Derivative
0.00
Limits
Output MAX
100.00
Output MIN
0.00

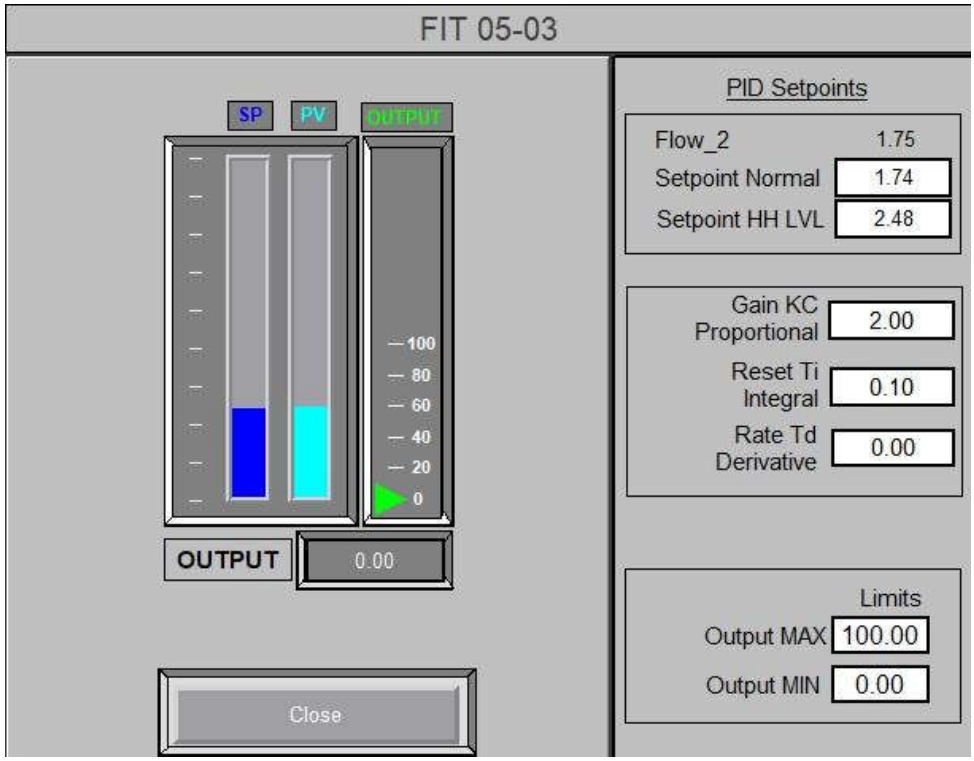
FIT 05-03
SP
PV
OUTPUT
100
80
60
40
20
0
OUTPUT
0.00
Close
PID Setpoints
Flow_2
1.75
Setpoint Normal
1.74
Setpoint HH LVL
2.48
Gain KC Proportional
2.00
Reset Ti Integral
0.10
Rate Td Derivative
0.00
Limits
Output MAX
100.00
Output MIN
0.00

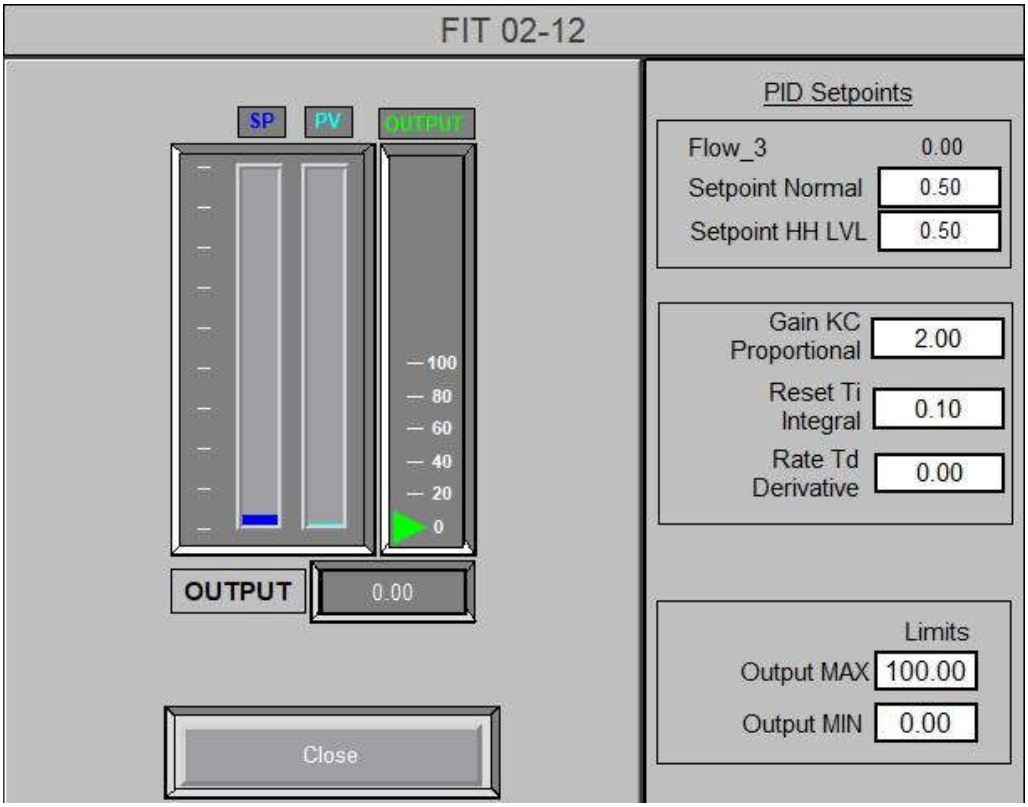
FIT 02-12
SP
PV
OUTPUT
100
80
60
40
20
0
OUTPUT
0.00
Close
PID Setpoints
Flow_3
0.00
Setpoint Normal
0.50
Setpoint HH LVL
0.50
Gain KC Proportional
2.00
Reset Ti Integral
0.10
Rate Td Derivative
0.00
Limits
Output MAX
100.00
Output MIN
0.00

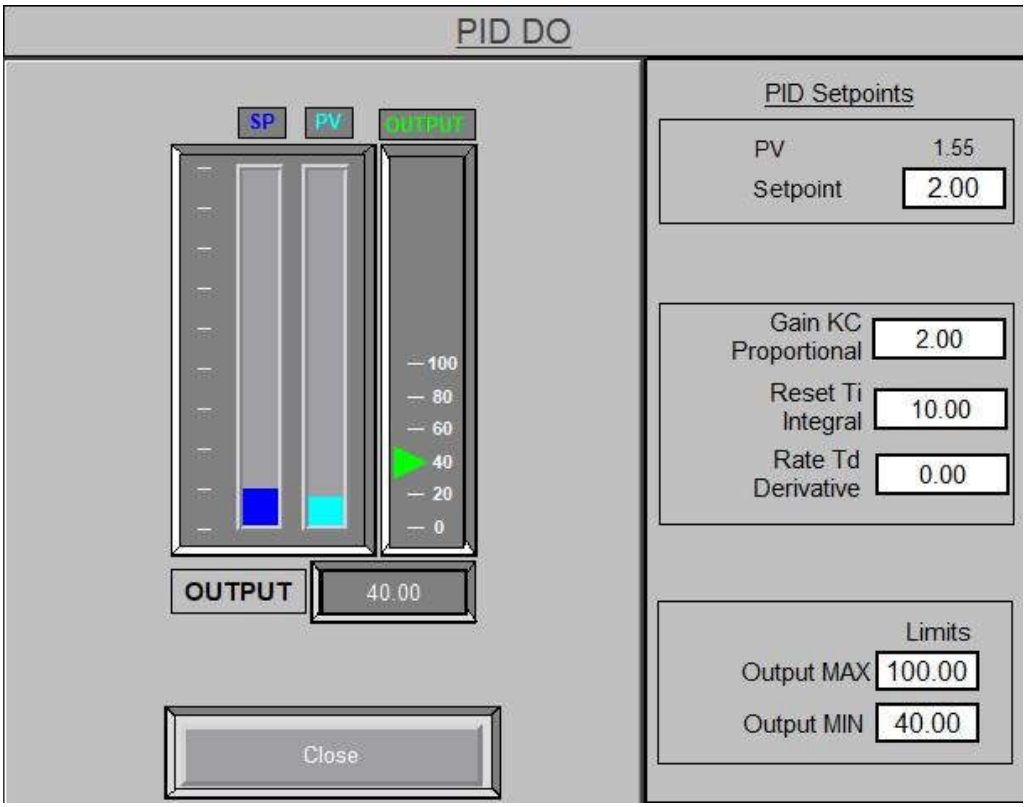
PID DO
SP
PV
OUTPUT
100
80
60
40
20
0
OUTPUT
40.00
Close
PID Setpoints
PV
1.55
Setpoint
2.00
Gain KC Proportional
2.00
Reset Ti Integral
10.00
Rate Td Derivative
0.00
Limits
Output MAX
100.00
Output MIN
40.00

Settings Alarms

Common delay for alarms can be adjusted here.
Buzzer can be enabled or disabled

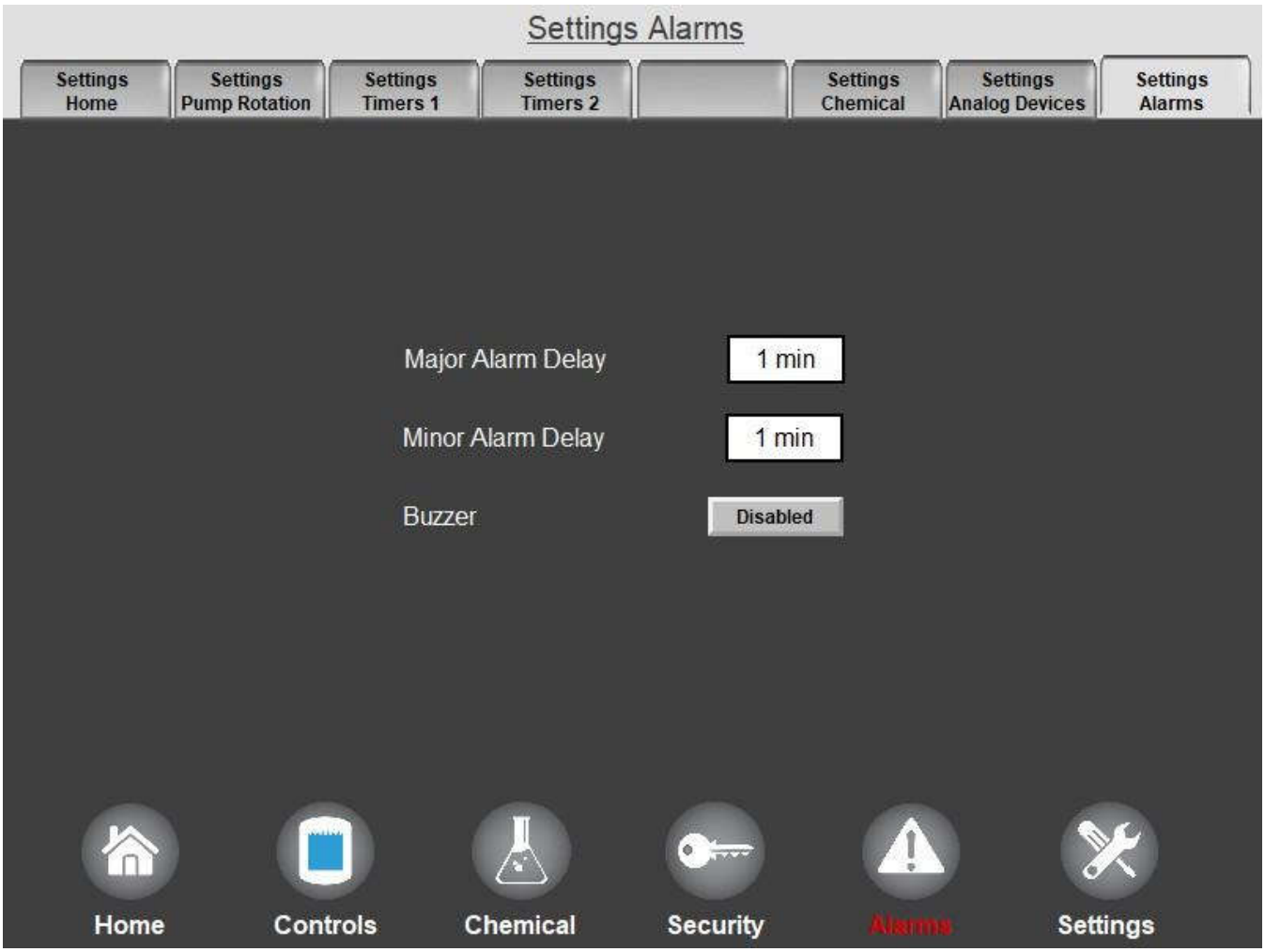

Alarms

Active Alarms

Active Alarms can be viewed using the alarm button located on the navigation bar.

Fault reset will reset all latched alarms

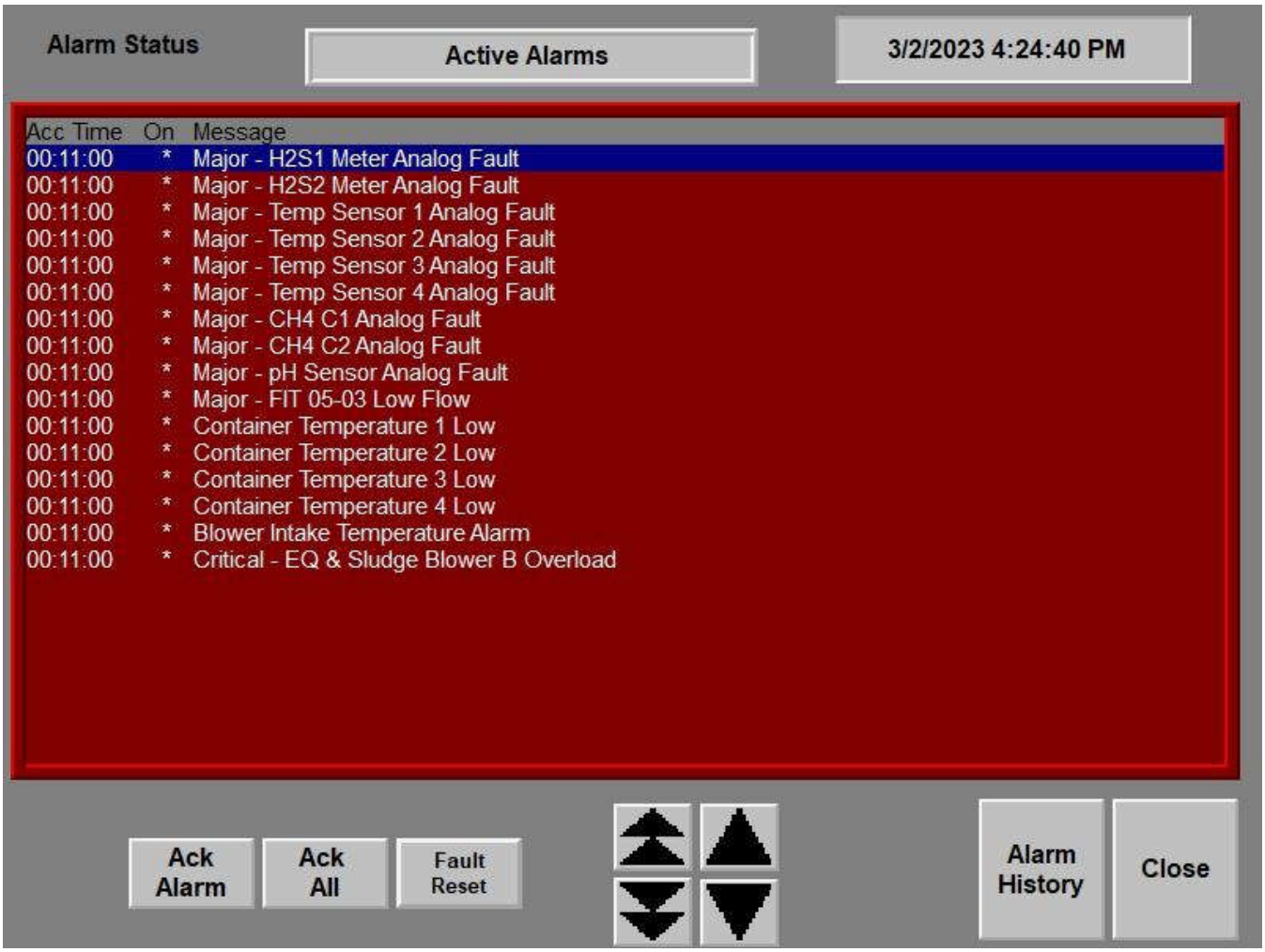

Alarm History

Alarm History can be viewed using the alarm history button located on the active alarm page.

Fault reset will reset all latched alarms

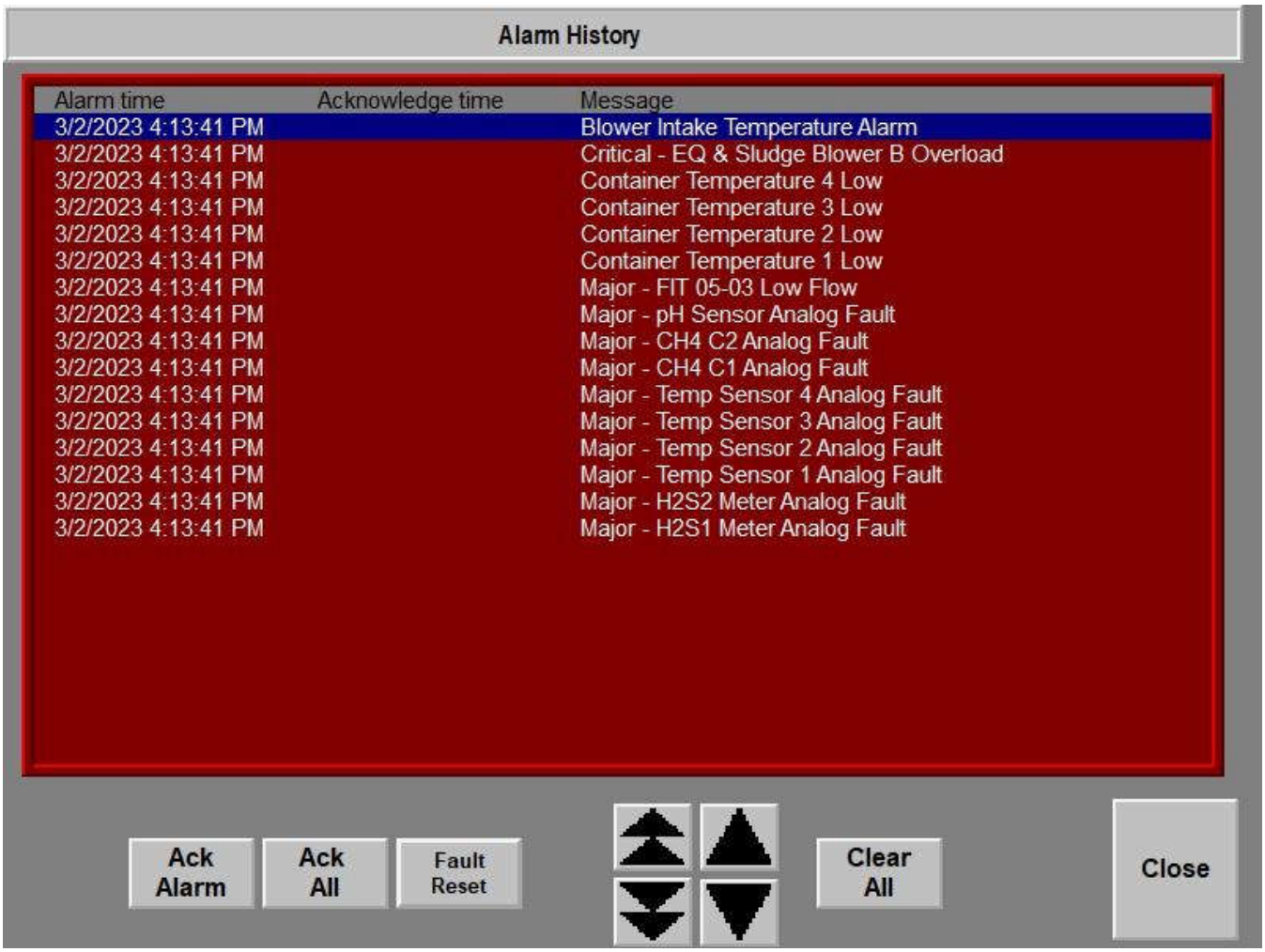

Security Settings

The security login button located on the bottom navigation bar will allow you to login and out.
You will be prompted for a login if you're not already logged in. If logged in and the security button is pushed it will logout.



Current user logged in will be displayed in the top left of the main overview display.

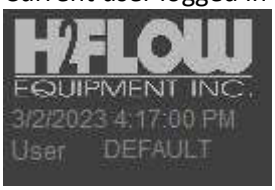

User	Password	Access
Default	None	View only
Operator	12345	Device controls
Super	54321	Device controls, settings access, exit runtime
OEM	H2flow access only	Device controls, settings access, exit runtime, configurations

Section 1.6

Bypass wastewater system

BYPASS OF WASTEWATER TREATENT SYSTEM

Reason for bypass

- Power Loss
- Prevent Damage to Equipment
    - High flows, toxic spills, or chemicals can harm pumps, pipes, tanks, and MBBR media.
    - Protect Biological Treatment
    - Toxic loads (e.g., strong disinfectants, solvents): kills the biofilm on MBBR carriers.
    - Extreme pH: disrupt microbes and reduce treatment performance.
    - Oil and Grease
    - Avoid System Overload
    - Heavy rain or sudden surges can exceed design capacity (overloading cause disturbance, and promotes microorganisms to leave the system).
- Perform Maintenance/ Repairs
- Damaged/ Clogged Piping
- Ensure Operator and Site Safety
    - Prevent unsafe working conditions during critical failures or hazardous events.

Summary of Bypass

- Always follow your facility's Standard Operating Procedures (SOPs) and approvals before any bypass.
- Record and report all bypass events as required.
- If needed, the wastewater treatment plant can be bypassed as follows (this is performed manually):
- Valves (V-01-19/20) are CLOSED, valve (V-01-18) is open ➔ bypass the raw wastewater *BEFORE* the screening.
    - If there is enough pressure to send it to the outfall ➔ valve (V-03-45) is CLOSED and valve (V-03-44) is open.
    - If there is insufficient pressure to send it to the outfall ➔ valve (V-03-44) is CLOSED and valve (V-03-45) is open.
- Valves (V-01-19/20) are OPEN, valve (V-01-37) is OPEN and valve (V-01-36) is CLOSED ➔ bypass the raw wastewater *AFTER* the screening.
    - If there is enough pressure to send it to the outfall ➔ valve (V-03-45) is CLOSED and valve (V-03-44) is open.
    - If there is insufficient pressure to send it to the outfall ➔ valve (V-03-44) is CLOSED and valve (V-03-45) is open.

Section 2

Drawings

Section 2.1

Process Flow Diagram (PFD)

REV	DESCRIPTION	DATE	BY	APP'D
0	FOR REFERENCE ONLY	11/27/20	GC	LB
1	REVISED PFD AS PER CUSTOMER'S COMMENTS.	09/01/21	SS	LB
2	REVISED PFD AS PER CUSTOMER'S COMMENTS.	09/27/21	SS	LB
3	REVISED PFD AS PER CUSTOMER'S COMMENTS.	12/14/21	SS	LB

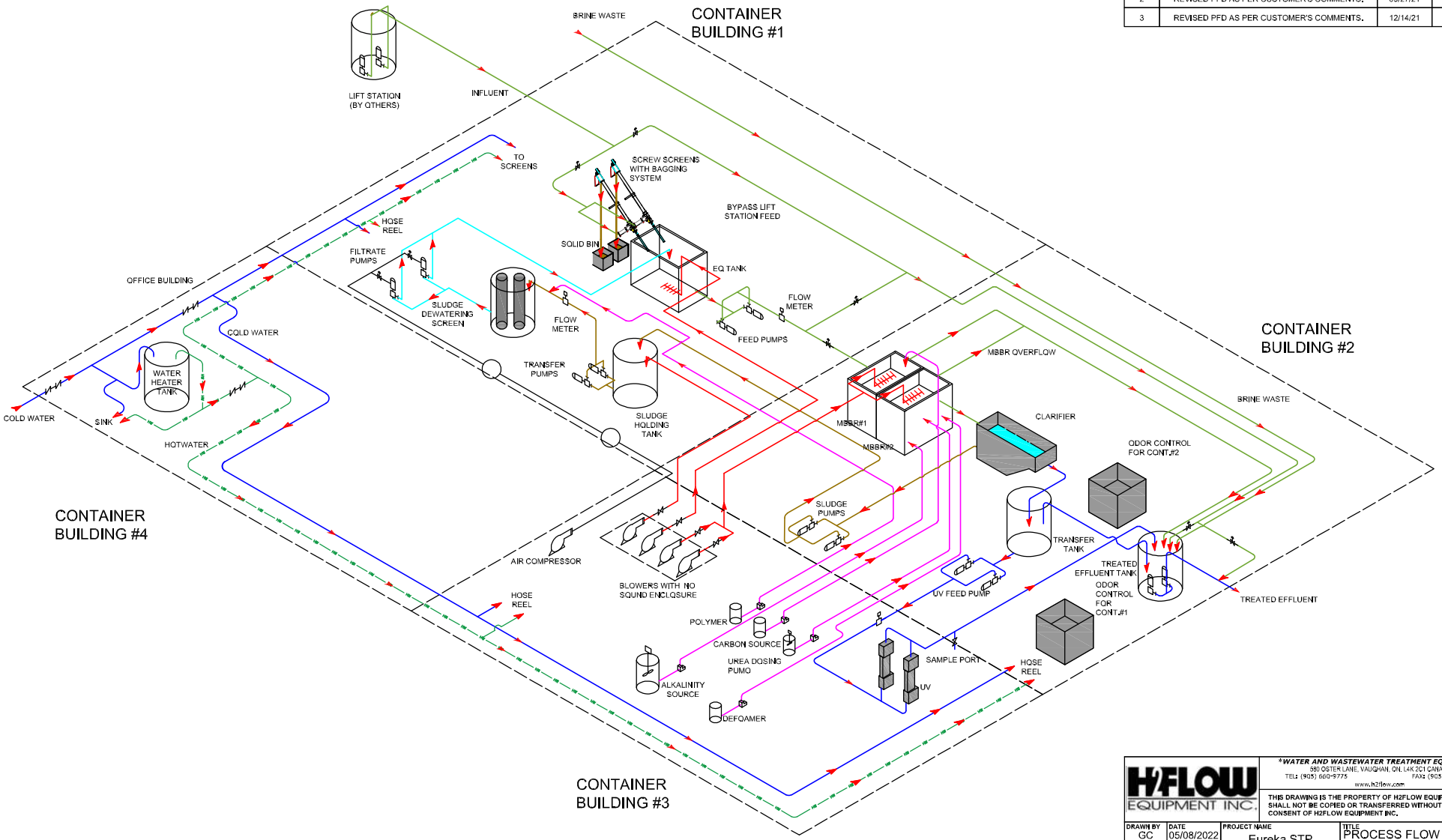

H2FLOW EQUIPMENT INC.

WATER AND WASTEWATER TREATMENT EQUIPMENT
680 OSTER LANE, VAUGHAN, ON, L4K 2C1 CANADA
TEL: (905) 660-9775 FAX: (905) 660-9744
www.h2flow.com

THIS DRAWING IS THE PROPERTY OF H2FLOW EQUIPMENT INC, AND SHALL NOT BE COPIED OR TRANSFERRED WITHOUT THE WRITTEN CONSENT OF H2FLOW EQUIPMENT INC.

DRAWN BY: GC	DATE: 05/08/2022	PROJECT NAME: Eureka STP Containerized MBBR	TITLE: PROCESS FLOW DIAGRAM PFD
APP'D BY: LB	DATE: 05/09/2022		DRAWING No.: Q-28520-20-00
SCALE: NTS		ALL DIMENSION ARE IN "mm" UNLESS OTHERWISE SPECIFIED	REV: 5
			SHEET 1 OF 1

Section 2.2

Piping and Instrumentation Diagram (P&ID)

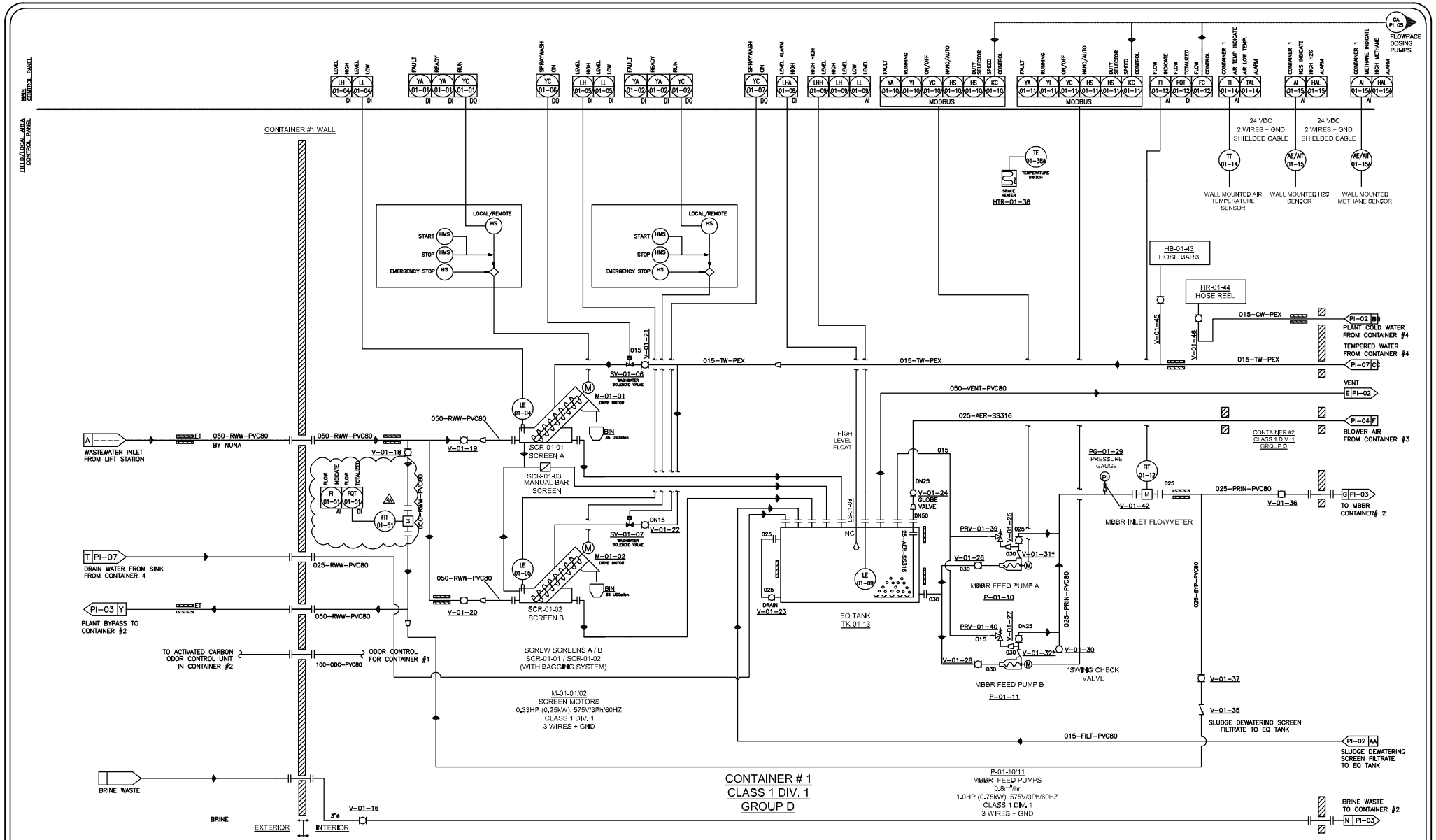

REV.	DESCRIPTION	DATE	BY
5	AS BUILT WITH NEW FLOWMETER MODIFICATIONS	06/07/23	SB
4A	AS BUILT WITH NEW FLOWMETER	11/17/22	JC
3	MODIFIED BASED ON CUSTOMER'S COMMENTS	05/06/22	LB
2	MODIFIED BASED ON CUSTOMER'S COMMENTS	03/08/22	SS

DRAWN BY: SS — DATE: 10/27/21
CHECKED BY: LB — DATE: 10/27/21
SCALE: N.T.S

H2FLOW EQUIPMENT INC.
WATER AND WASTEWATER TREATMENT EQUIPMENT
580 OSTER LANE, CONCORD, ON L4K 2C1 CANADA
TEL: (905) 660-9775 FAX: (905) 660-9744
www.h2flow.com

REFERENCE INFORMATION

DRAWING APPROVAL

PROJECT NAME: *EUREKA STP CONTAINERIZED MBBR*

TITLE: PROCESS INSTRUMENTATION DIAGRAM - P&ID

REV. 5

DRAWING No.: Q-28520-20-01

SHEET 1 OF 7

PI-01

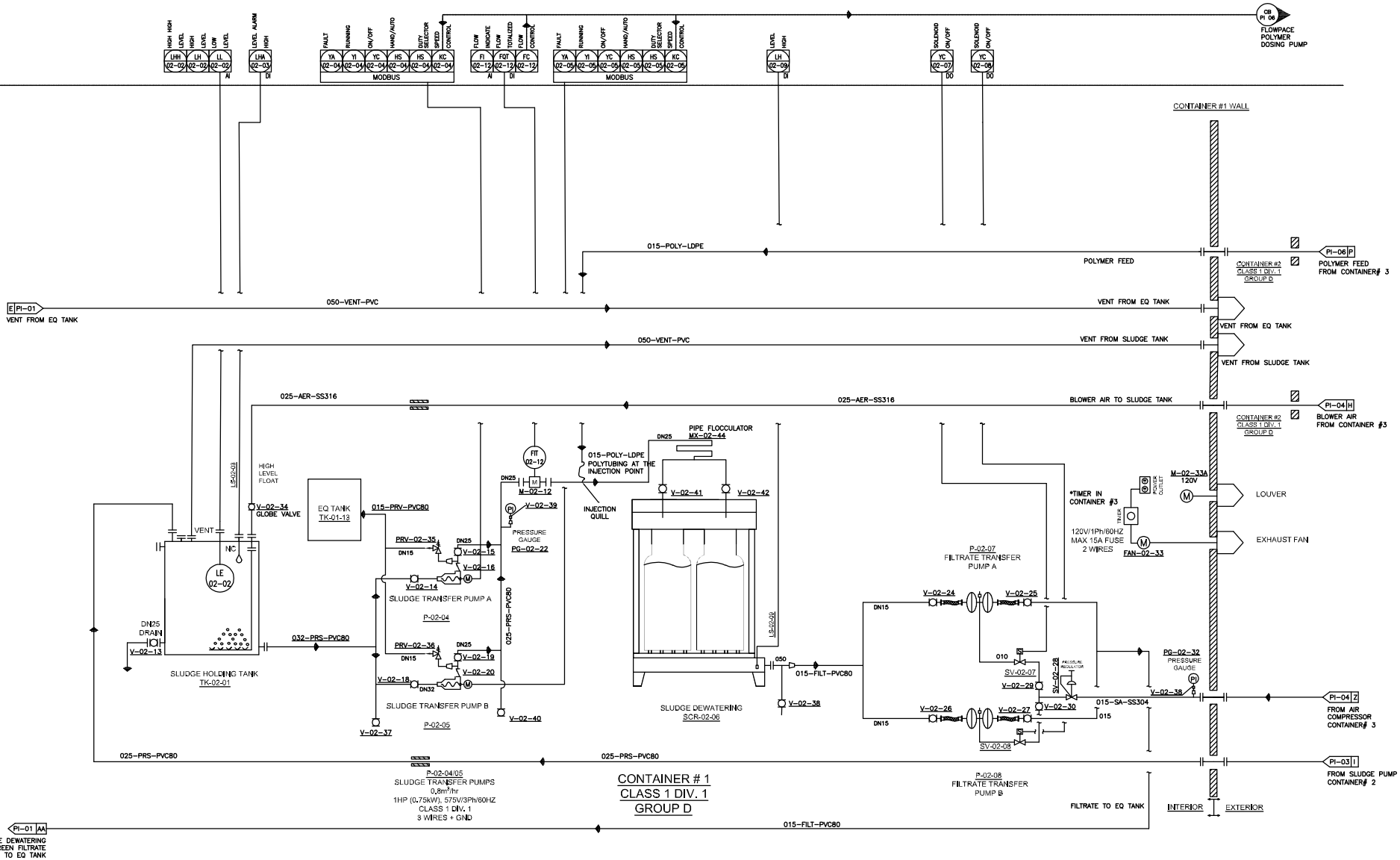

REV.	DESCRIPTION	DATE	BY
5	AS BUILT WITH NEW FLOWMETER MODIFICATIONS	06/07/23	SB
4A	AS BUILT WITH NEW FLOWMETER	11/17/22	JC
3	MODIFIED BASED ON CUSTOMER'S COMMENTS	05/06/22	LB
2	MODIFIED BASED ON CUSTOMER'S COMMENTS	03/08/22	SS

DRAWN BY: SS — DATE: 10/27/21
CHECKED BY: LB — DATE: 10/27/21
SCALE: N.T.S

H2FLOW EQUIPMENT INC.
WATER AND WASTEWATER TREATMENT EQUIPMENT
580 OSTER LANE, CONCORD, ON L4K 2C1 CANADA
TEL: (905) 660-9775 FAX: (905) 660-9744
www.h2flow.com

REFERENCE INFORMATION

DRAWING APPROVAL

PROJECT NAME: *EUREKA STP CONTAINERIZED MBBR*

TITLE: PROCESS INSTRUMENTATION DIAGRAM - P&ID — REV. 5

DRAWING No.: Q-28520-20-01 — PI-02

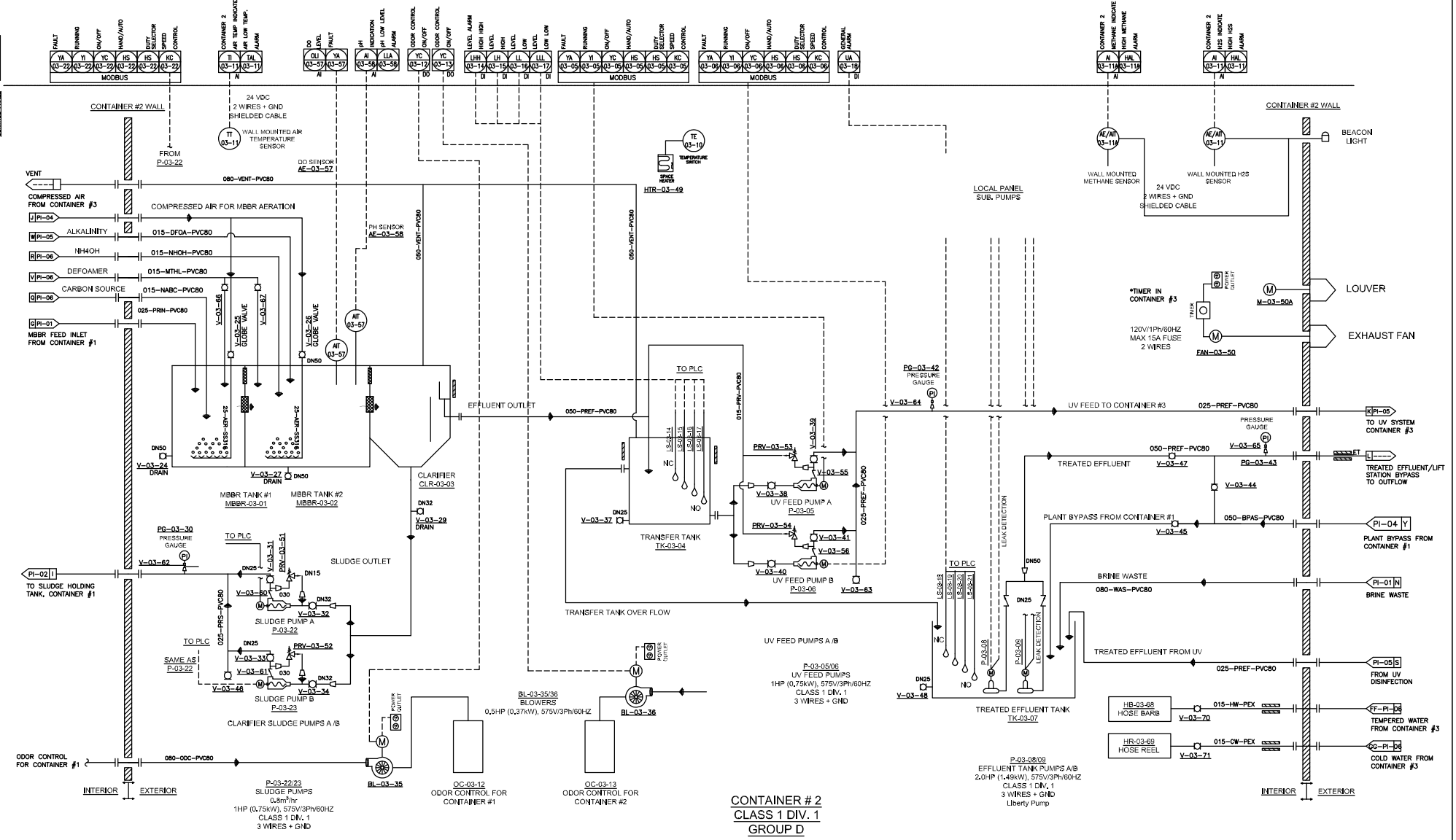

REV.	DESCRIPTION	DATE	BY
5	AS BUILT WITH NEW FLOWMETER MODIFICATIONS	06/07/23	SB
4A	AS BUILT WITH NEW FLOWMETER	11/17/22	JC
3	MODIFIED BASED ON CUSTOMER'S COMMENTS	05/06/22	LB
2	MODIFIED BASED ON CUSTOMER'S COMMENTS	03/08/22	SS

DRAWN BY: SS — DATE: 10/28/21
CHECKED BY: LB — DATE: 10/28/21
SCALE: N.T.S

H2FLOW EQUIPMENT INC.
WATER AND WASTEWATER TREATMENT EQUIPMENT
580 OSTER LANE, CONCORD, ON L4K 2C1 CANADA
TEL: (905) 660-9775 FAX: (905) 660-9744
www.h2flow.com

REFERENCE INFORMATION

DRAWING APPROVAL

PROJECT NAME: *EUREKA STP CONTAINERIZED MBBR*

TITLE: PROCESS INSTRUMENTATION DIAGRAM - P&ID

REV. 5

DRAWING No.: Q-28520-20-01

SHEET 3 OF 7

PI-03

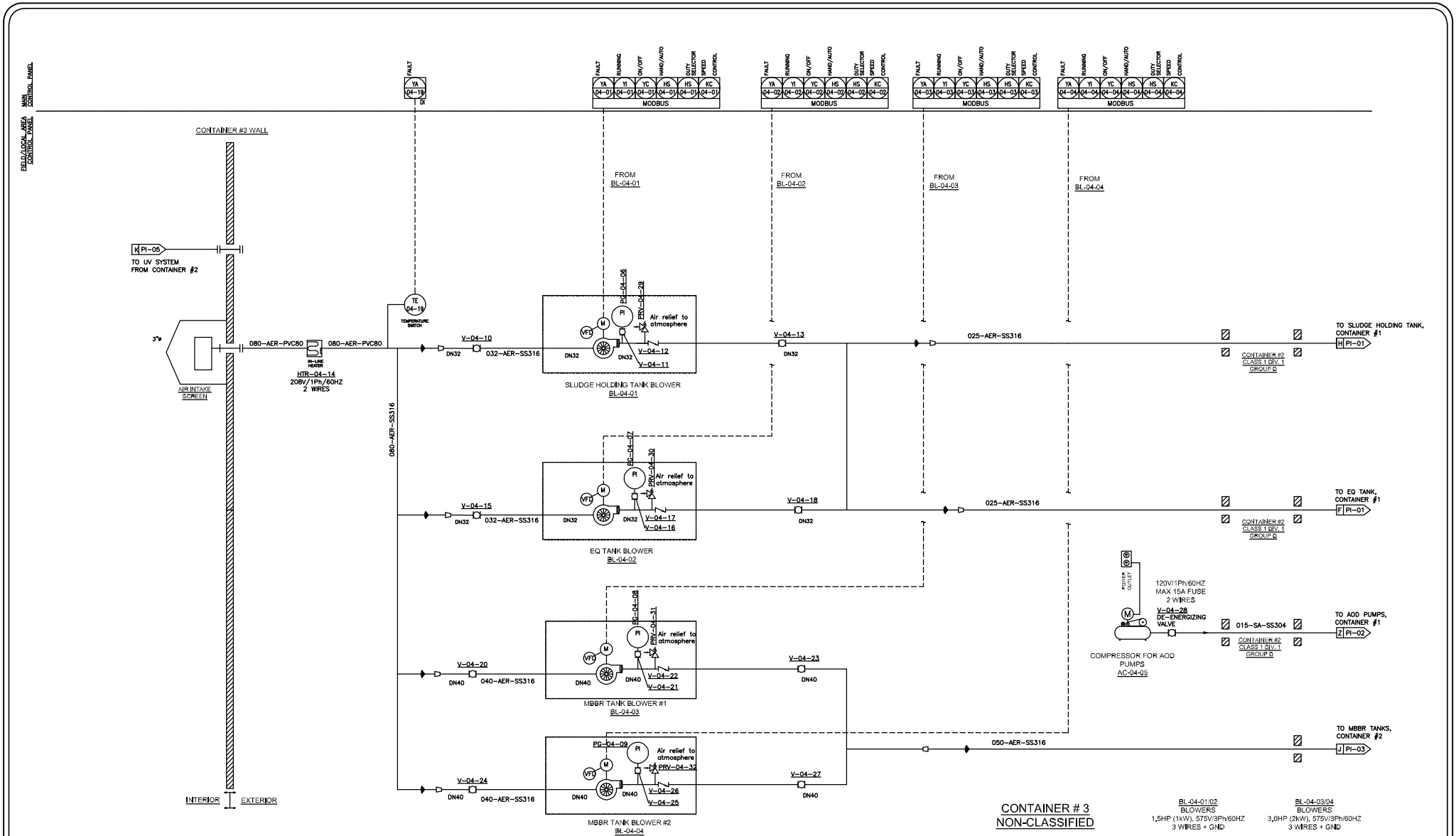

REV.	DESCRIPTION	DATE	BY
5	AS BUILT WITH NEW FLOWMETER MODIFICATIONS	06/07/23	SB
4A	AS BUILT WITH NEW FLOWMETER	11/17/22	JC
3	MODIFIED BASED ON CUSTOMER'S COMMENTS	05/06/22	LB
2	MODIFIED BASED ON CUSTOMER'S COMMENTS	03/08/22	SS

DRAWN BY: SS — DATE: 10/28/21
CHECKED BY: LB — DATE: 10/28/21
SCALE: N.T.S

H2FLOW EQUIPMENT INC.
WATER AND WASTEWATER TREATMENT EQUIPMENT
580 OSTER LANE, CONCORD, ON L4K 2C1 CANADA
TEL: (905) 660-9775 FAX: (905) 660-9744
www.h2flow.com

REFERENCE INFORMATION

DRAWING APPROVAL

PROJECT NAME: *EUREKA STP CONTAINERIZED MBBR*

TITLE: PROCESS INSTRUMENTATION DIAGRAM - P&ID

REV. 5

DRAWING No.: Q-28520-20-01

PI-04

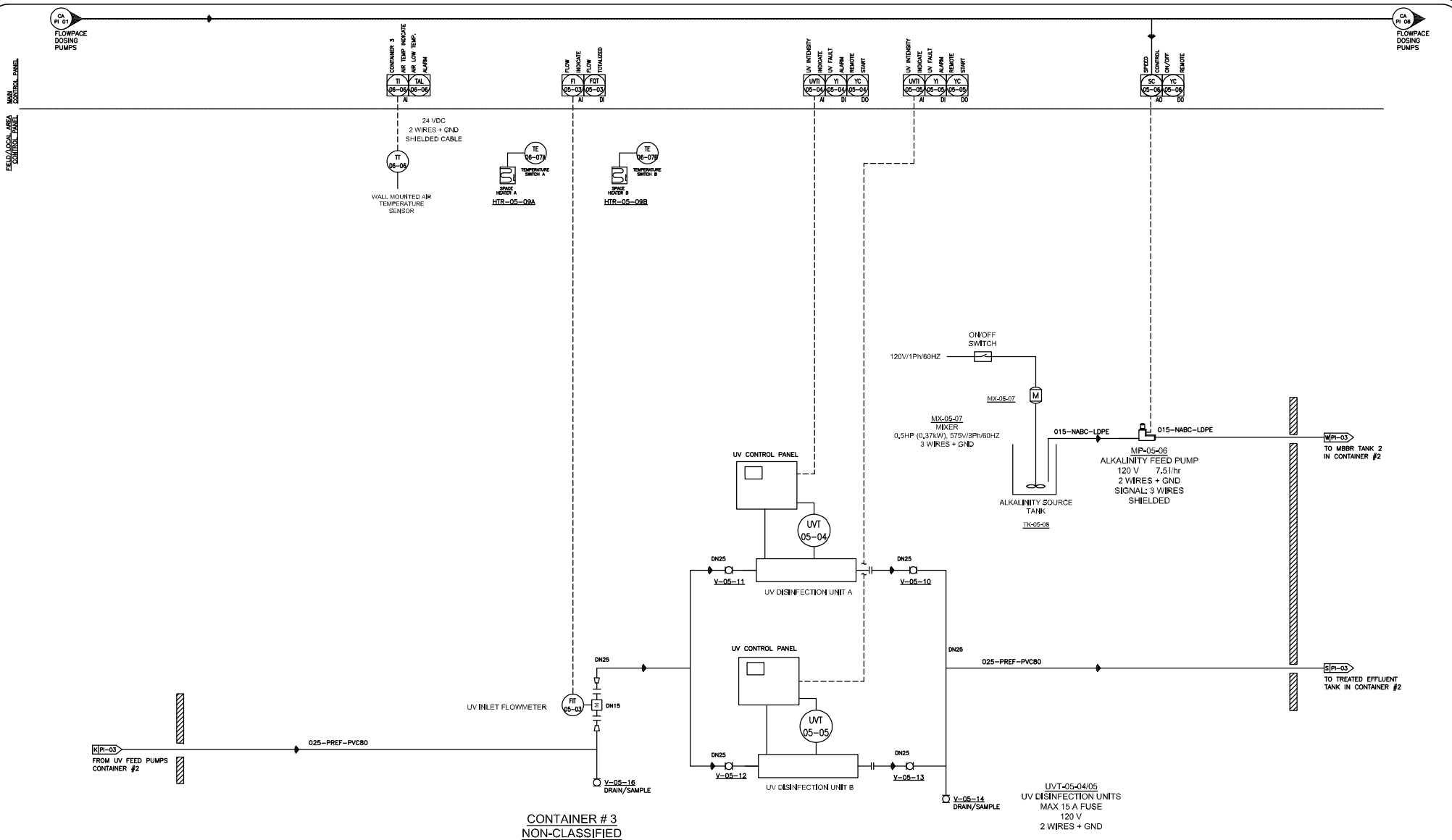

REV.	DESCRIPTION	DATE	BY
5	AS BUILT WITH NEW FLOWMETER MODIFICATIONS	06/07/23	SB
4A	AS BUILT WITH NEW FLOWMETER	11/17/22	JC
3	MODIFIED BASED ON CUSTOMER'S COMMENTS	05/06/22	LB
2	MODIFIED BASED ON CUSTOMER'S COMMENTS	03/08/22	SS

DRAWN BY: SS — DATE: 10/28/21
CHECKED BY: LB — DATE: 10/28/21
SCALE: N.T.S

H2FLOW EQUIPMENT INC.
WATER AND WASTEWATER TREATMENT EQUIPMENT
580 OSTER LANE, CONCORD, ON L4K 2C1 CANADA
TEL: (905) 660-9775 FAX: (905) 660-9744
www.h2flow.com

REFERENCE INFORMATION

DRAWING APPROVAL

PROJECT NAME: *EUREKA STP CONTAINERIZED MBBR*

TITLE: PROCESS INSTRUMENTATION DIAGRAM - P&ID

REV. 5

DRAWING No.: Q-28520-20-01

PI-05

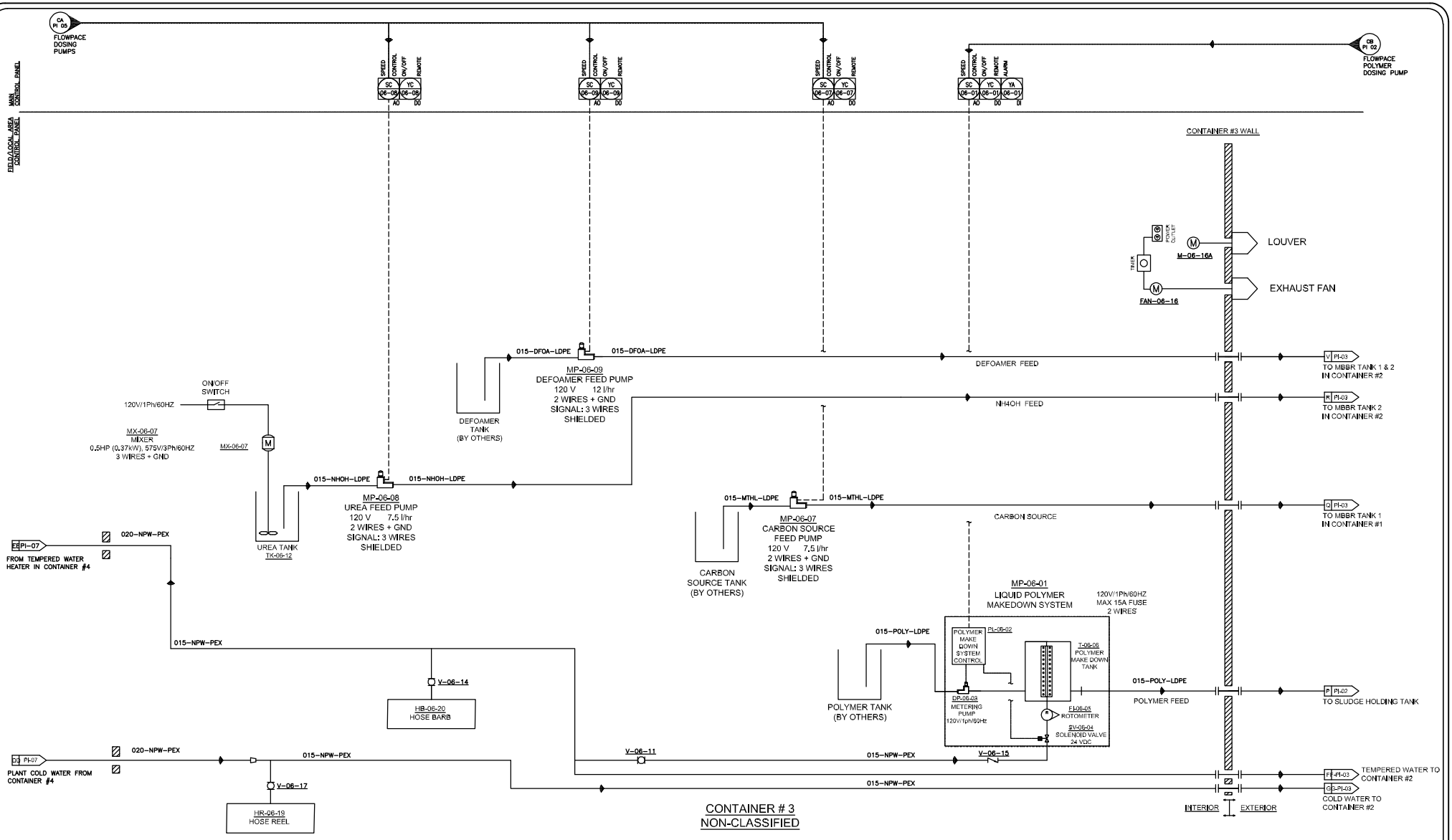

REV.	DESCRIPTION	DATE	BY
5	AS BUILT WITH NEW FLOWMETER MODIFICATIONS	06/07/23	SB
4A	AS BUILT WITH NEW FLOWMETER	11/17/22	JC
3	MODIFIED BASED ON CUSTOMER'S COMMENTS	05/06/22	LB
2	MODIFIED BASED ON CUSTOMER'S COMMENTS	03/08/22	SS

DRAWN BY: SS — DATE: 10/05/21
CHECKED BY: LB — DATE: 10/05/21
SCALE: N.T.S

H2FLOW EQUIPMENT INC.
WATER AND WASTEWATER TREATMENT EQUIPMENT
580 OSTER LANE, CONCORD, ON L4K 2C1 CANADA
TEL: (905) 660-9775 FAX: (905) 660-9744
www.h2flow.com

REFERENCE INFORMATION

DRAWING APPROVAL

PROJECT NAME: *EUREKA STP CONTAINERIZED MBBR*

TITLE: PROCESS INSTRUMENTATION DIAGRAM - P&ID

REV. 5

DRAWING No.: Q-28520-20-01

PI-06

SHEET 6 OF 7

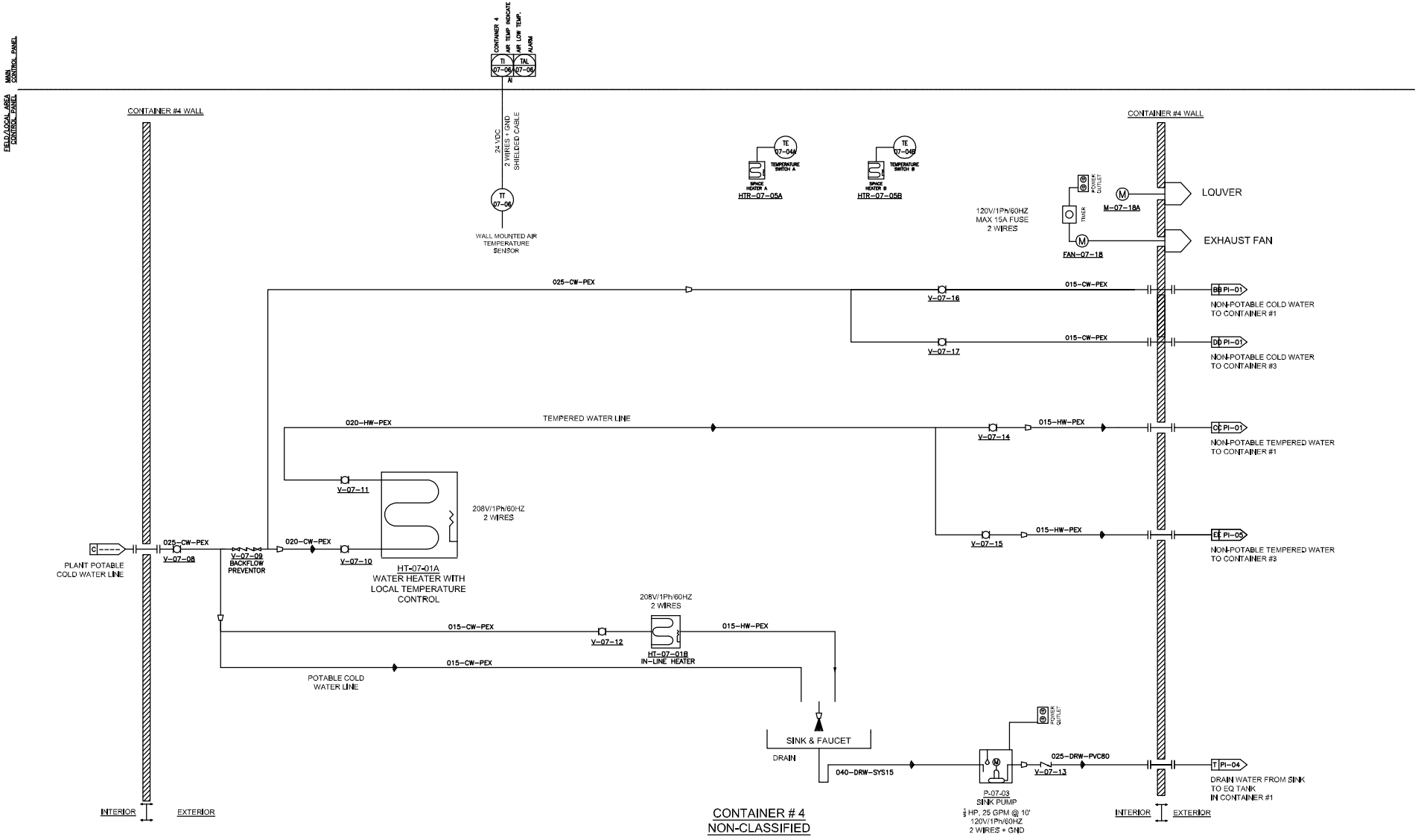

REV.	DESCRIPTION	DATE	BY
5	AS BUILT WITH NEW FLOWMETER MODIFICATIONS	06/07/23	SB
4A	AS BUILT WITH NEW FLOWMETER	11/17/22	JC
3	MODIFIED BASED ON CUSTOMER'S COMMENTS	05/06/22	LB
2	MODIFIED BASED ON CUSTOMER'S COMMENTS	03/08/22	SS

DRAWN BY: SS — DATE: 10/28/21
CHECKED BY: LB — DATE: 10/28/21
SCALE: N.T.S

H2FLOW EQUIPMENT INC.
WATER AND WASTEWATER TREATMENT EQUIPMENT
580 OSTER LANE, CONCORD, ON L4K 2C1 CANADA
TEL: (905) 660-9775 FAX: (905) 660-9744
www.h2flow.com

REFERENCE INFORMATION

DRAWING APPROVAL

PROJECT NAME: *EUREKA STP CONTAINERIZED MBBR*

TITLE: PROCESS INSTRUMENTATION DIAGRAM - P&ID

REV. 5

DRAWING No.: Q-28520-20-01

PI-07

SHEET 7 OF 7

Section 2.3

General Assembly Diagram (GAD)

REV	DESCRIPTION	DATE	BY	APP'D
0	FOR REFERENCE ONLY	01/28/22	JC	LB
1	REVISED AS PER COMMENTS	02/10/22	JC	LB
2	REVISED AS PER COMMENTS	05/09/22	JC	LB

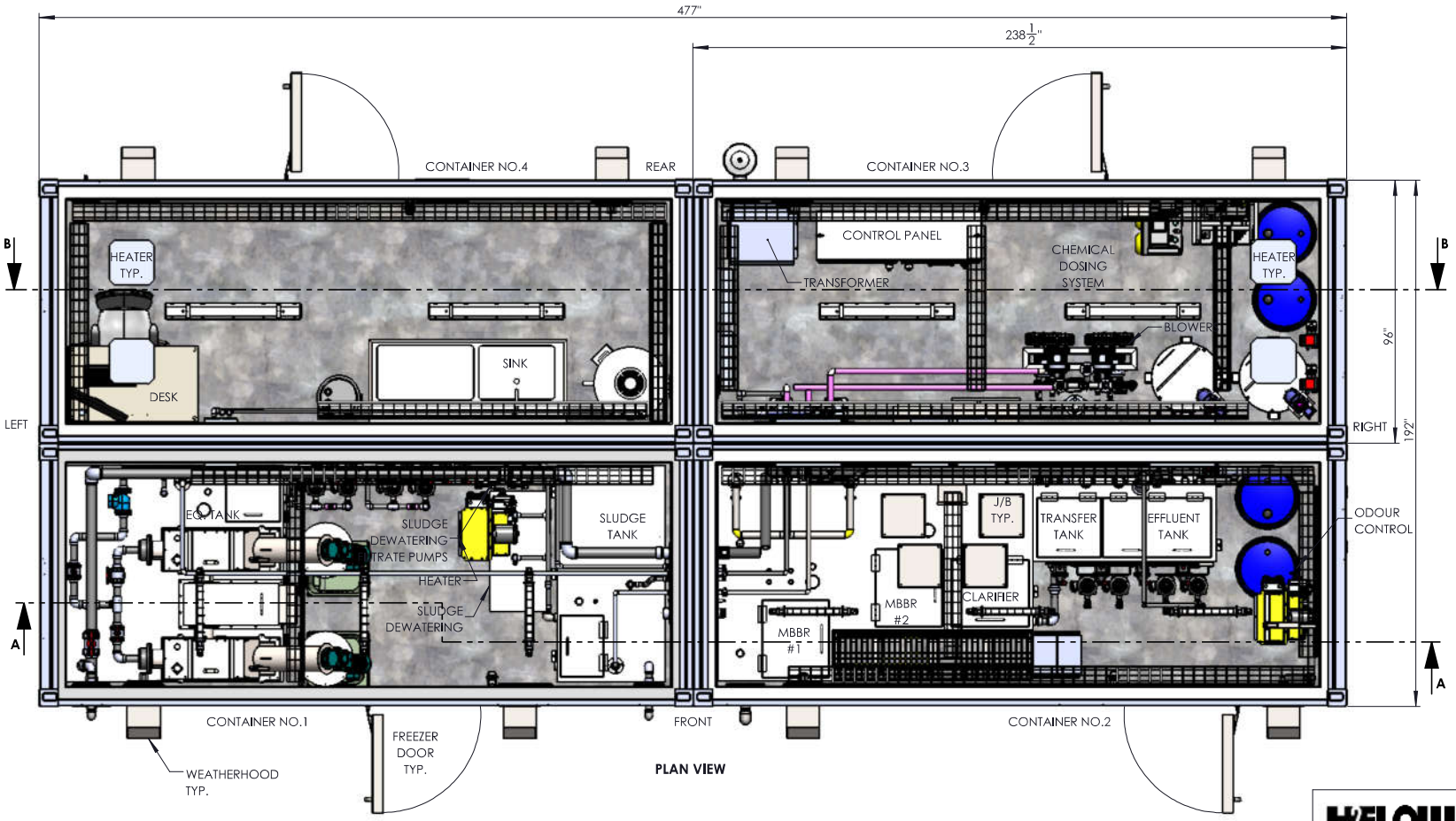

PLAN VIEW

H2FLOW EQUIPMENT INC.

WATER AND WASTEWATER TREATMENT EQUIPMENT
560 OSTER LANE, CONCORD, ON L4K 2C1 CANADA
TEL: (905) 660-9775 FAX: (905) 660-9744
www.h2flow.com

THIS DRAWING IS THE PROPERTY OF H2FLOW EQUIPMENT INC. AND SHALL NOT BE COPIED OR TRANSFERRED WITHOUT THE WRITTEN CONSENT OF H2FLOW EQUIPMENT INC.

DRAWN BY: JC	DATE: 01/28/22	PROJECT NAME: EUREKA STP CONTAINERIZED MBBR NUNAVUT	TITLE: GENERAL ARRANGEMENT DRAWING
APP'D BY: LB	DATE: 01/28/22		DRAWING No.: Q-28520-50-10
SCALE: NTS		ALL DIMENSION ARE IN INCHES UNLESS OTHERWISE SPECIFIED	REV: 2
			SHEET 1 OF 6

REV	DESCRIPTION	DATE	BY	APP'D
0	FOR REFERENCE ONLY	01/28/22	JC	LB
1	REVISED AS PER COMMENTS	02/10/22	JC	LB
2	REVISED AS PER COMMENTS	05/09/22	JC	LB

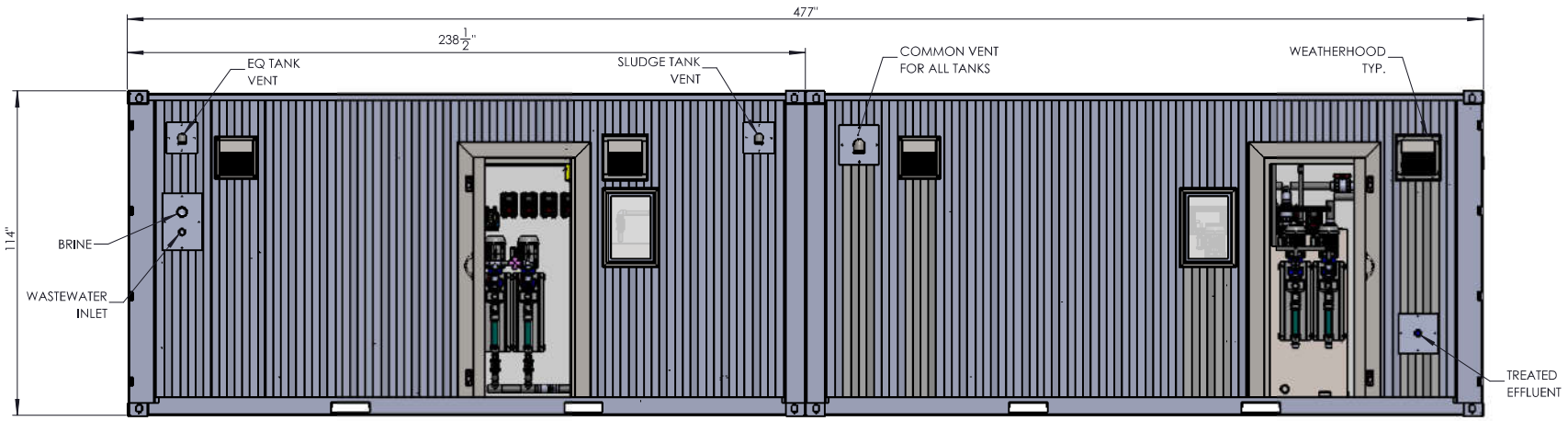

FRONT

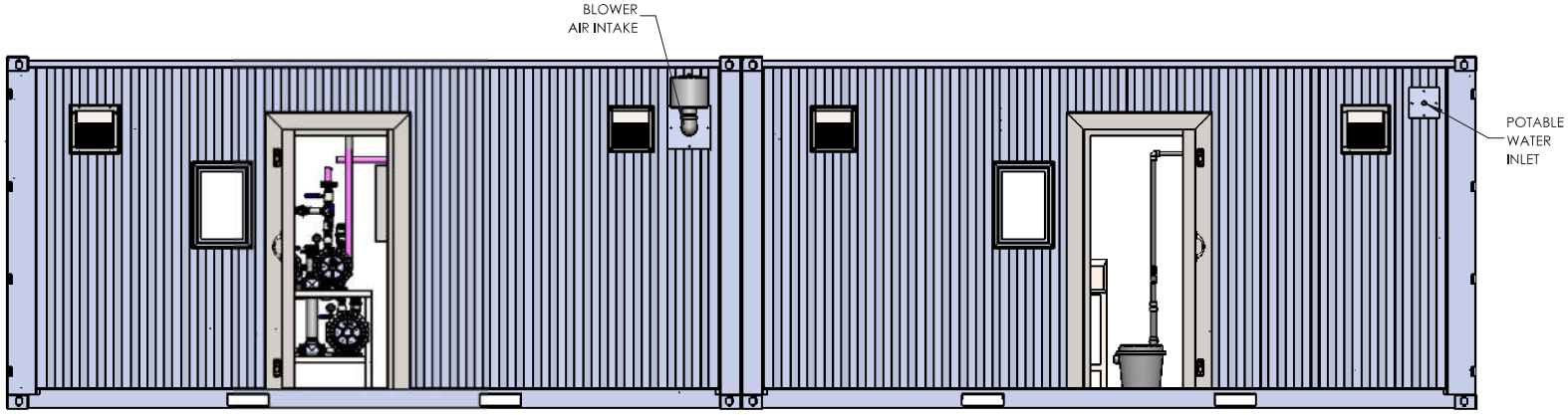

REAR

H2FLOW EQUIPMENT INC.

WATER AND WASTEWATER TREATMENT EQUIPMENT
560 OSTER LANE, CONCORD, ON L4K 2C1 CANADA
TEL: (905) 660-9775 FAX: (905) 660-9744
www.h2flow.com

THIS DRAWING IS THE PROPERTY OF H2FLOW EQUIPMENT INC. AND SHALL NOT BE COPIED OR TRANSFERRED WITHOUT THE WRITTEN CONSENT OF H2FLOW EQUIPMENT INC.

DRAWN BY: JC	DATE: 01/28/22	PROJECT NAME: EUREKA STP CONTAINERIZED MBBR NUNAVUT	TITLE: GENERAL ARRANGEMENT DRAWING
APP'D BY: LB	DATE: 01/28/22		DRAWING No.: Q-28520-50-10
SCALE: NTS		ALL DIMENSION ARE IN INCHES UNLESS OTHERWISE SPECIFIED	REV: 2
			SHEET 2 OF 6

C

REV	DESCRIPTION	DATE	BY	APP'D
0	FOR REFERENCE ONLY	01/28/22	JC	LB
1	REVISED AS PER COMMENTS	02/10/22	JC	LB
2	REVISED AS PER COMMENTS	05/09/22	JC	LB

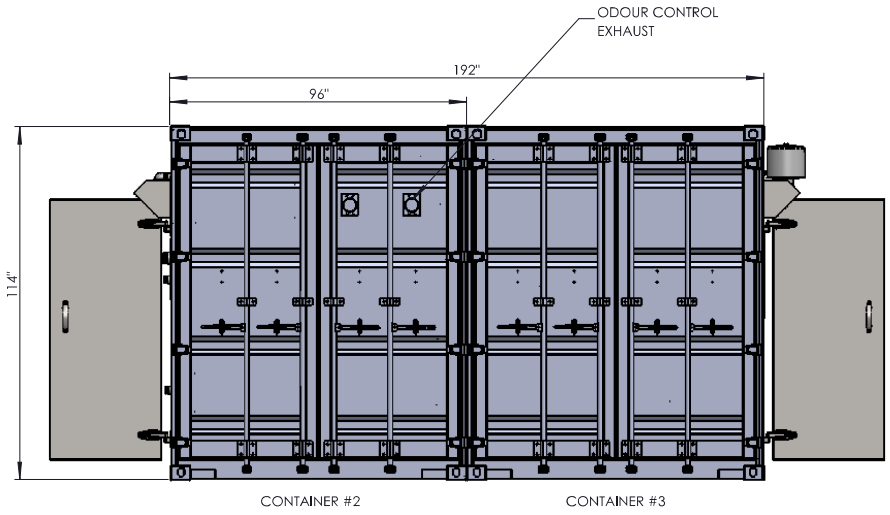

RIGHT VIEW

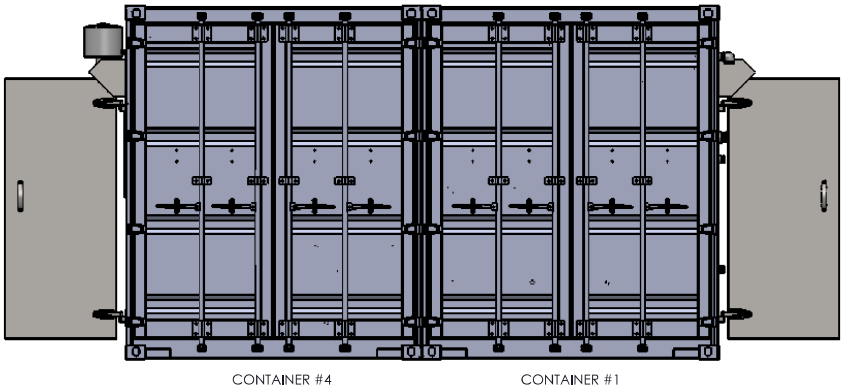

LEFT VIEW

H2FLOW EQUIPMENT INC.
WATER AND WASTEWATER TREATMENT EQUIPMENT
560 OSTER LANE, CONCORD, ON L4K 2C1 CANADA
TEL: (905) 660-9775 FAX: (905) 660-9744
www.h2flow.com

THIS DRAWING IS THE PROPERTY OF H2FLOW EQUIPMENT INC. AND SHALL NOT BE COPIED OR TRANSFERRED WITHOUT THE WRITTEN CONSENT OF H2FLOW EQUIPMENT INC.

DRAWN BY: JC	DATE: 01/28/22	PROJECT NAME: EUREKA STP CONTAINERIZED MBBR NUNAVUT	TITLE: GENERAL ARRANGEMENT DRAWING
APP'D BY: LB	DATE: 01/28/22		DRAWING No.: Q-28520-50-10
SCALE: NTS		ALL DIMENSION ARE IN INCHES UNLESS OTHERWISE SPECIFIED	REV: 2
			SHEET 3 OF 6

REV	DESCRIPTION	DATE	BY	APP'D
0	FOR REFERENCE ONLY	01/28/22	JC	LB

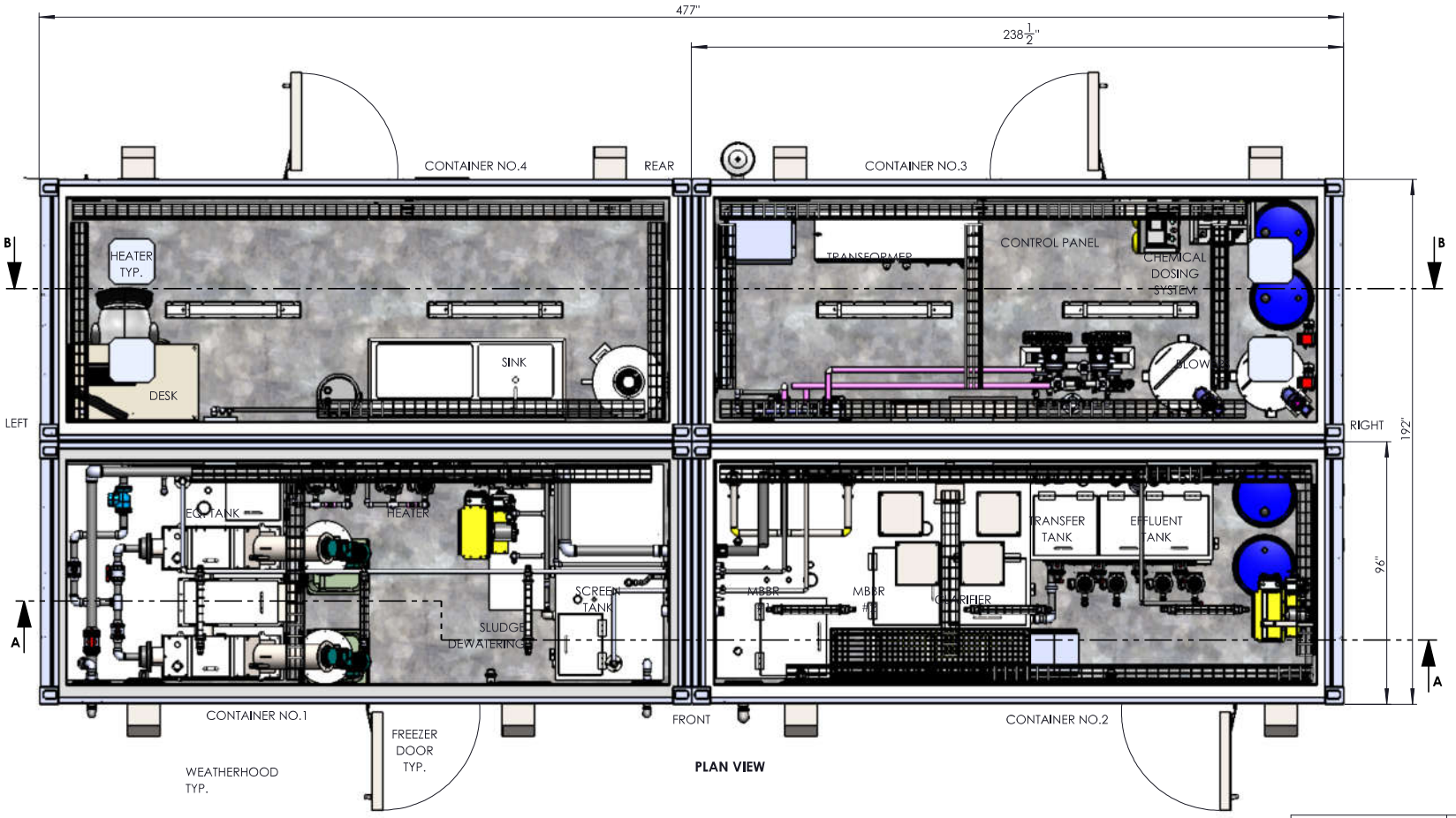

PLAN VIEW

H2FLOW EQUIPMENT INC.

WATER AND WASTEWATER TREATMENT EQUIPMENT
580 OSTER LANE, CONCORD, ON L4K 2C1 CANADA
TEL: (905) 660-9775 FAX: (905) 660-9744
www.h2flow.com

THIS DRAWING IS THE PROPERTY OF H2FLOW EQUIPMENT INC. AND SHALL NOT BE COPIED OR TRANSFERRED WITHOUT THE WRITTEN CONSENT OF H2FLOW EQUIPMENT INC.

DRAWN BY: JC	DATE: 01/28/22	PROJECT NAME: EUREKA STP CONTAINERIZED MBBR NUNAVUT	TITLE: GENERAL ARRANGEMENT DRAWING
APP'D BY: LB	DATE: 01/28/22		DRAWING No.: Q-28520-50-10
SCALE: NTS		ALL DIMENSION ARE IN INCHES UNLESS OTHERWISE SPECIFIED	REV: 0
			SHEET 1 OF 6

REV	DESCRIPTION	DATE	BY	APP'D
0	FOR REFERENCE ONLY	01/28/22	JC	LB
1	REVISED AS PER COMMENTS	02/10/22	JC	LB
2	REVISED AS PER COMMENTS	05/09/22	JC	LB

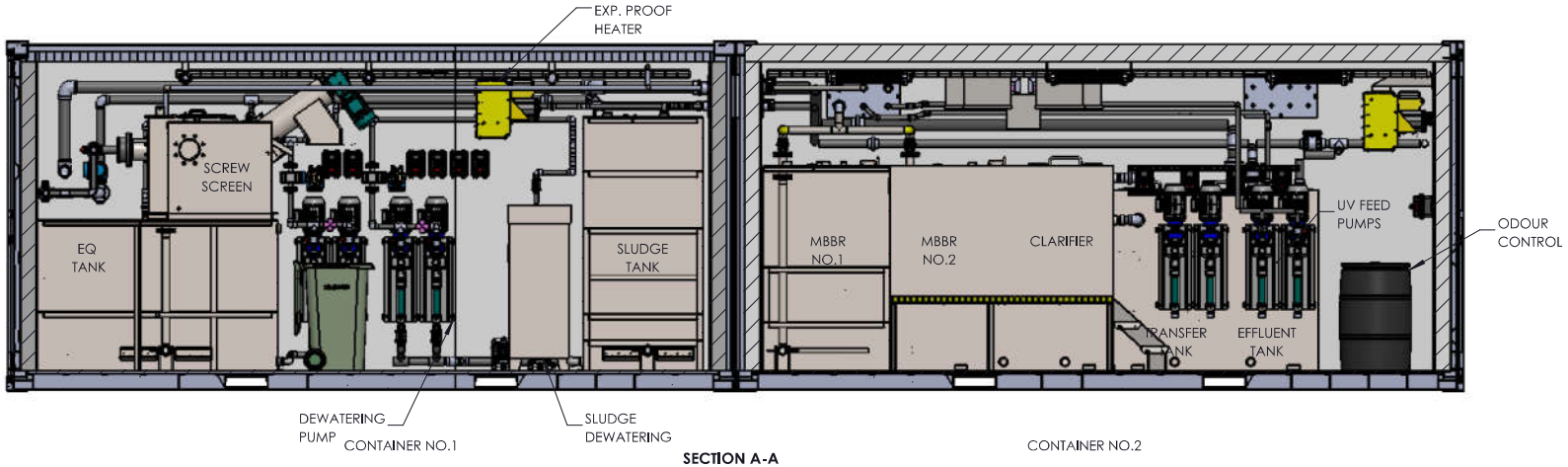

SECTION A-A

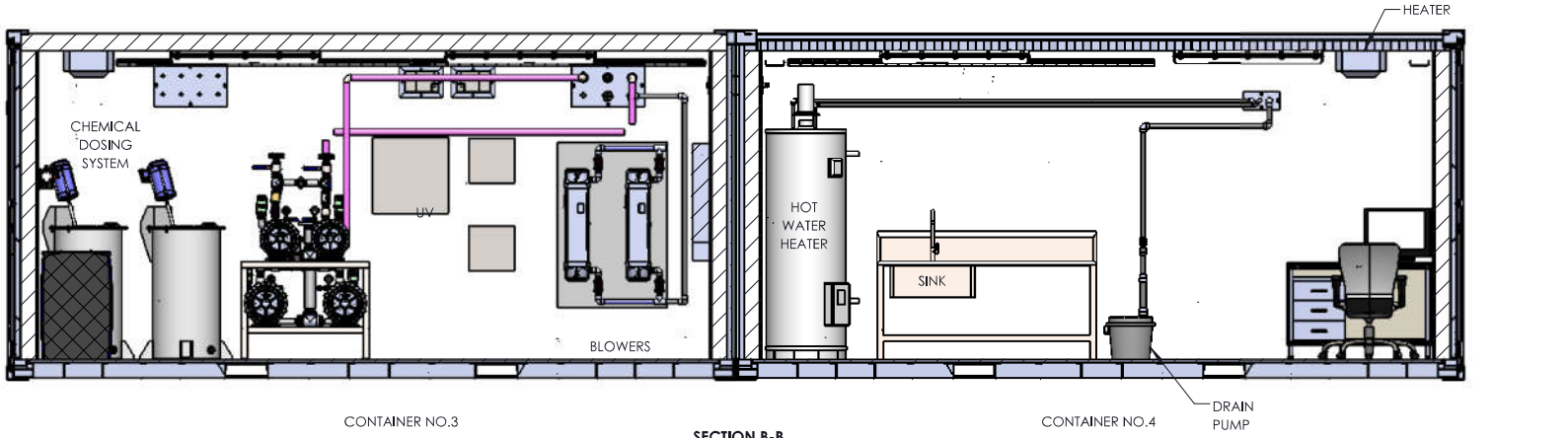

SECTION B-B

H2FLOW EQUIPMENT INC.

WATER AND WASTEWATER TREATMENT EQUIPMENT
580 OSTER LANE, CONCORD, ON L4K 2C1 CANADA
TEL: (905) 660-9775 FAX: (905) 660-9744
www.h2flow.com

THIS DRAWING IS THE PROPERTY OF H2FLOW EQUIPMENT INC. AND SHALL NOT BE COPIED OR TRANSFERRED WITHOUT THE WRITTEN CONSENT OF H2FLOW EQUIPMENT INC.

DRAWN BY: JC	DATE: 01/28/22	PROJECT NAME: EUREKA STP CONTAINERIZED MBBR NUNAVUT	TITLE: GENERAL ARRANGEMENT DRAWING
APP'D BY: LB	DATE: 01/28/22		DRAWING No.: Q-28520-50-10
SCALE: NTS		ALL DIMENSION ARE IN INCHES UNLESS OTHERWISE SPECIFIED	REV: 2
			SHEET 4 OF 6

REV	DESCRIPTION	DATE	BY	APP'D
0	FOR REFERENCE ONLY	01/28/22	JC	LB
1	REVISED AS PER COMMENTS	02/10/22	JC	LB
2	REVISED AS PER COMMENTS	05/09/22	JC	LB

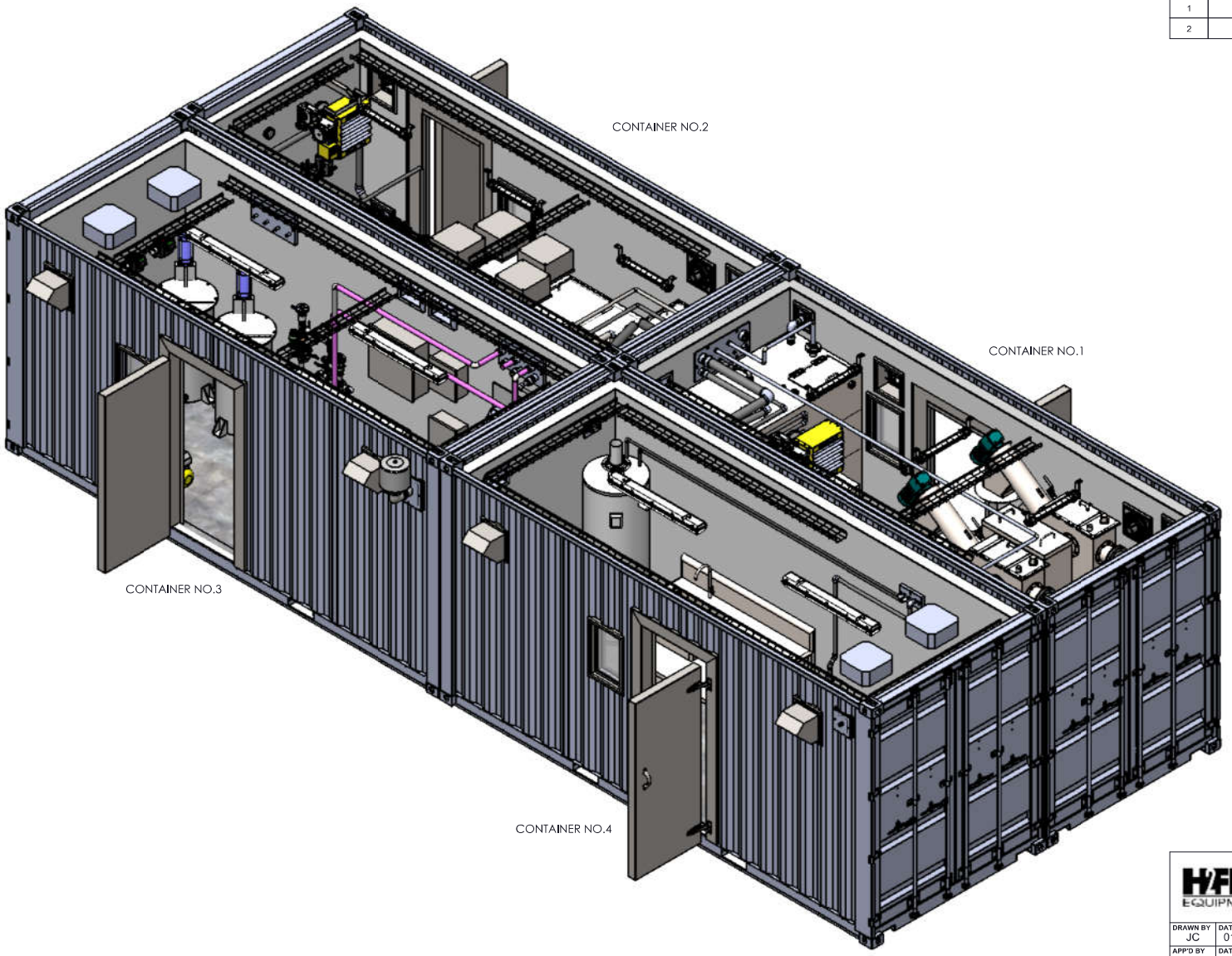

H2FLOW EQUIPMENT INC.
WATER AND WASTEWATER TREATMENT EQUIPMENT
560 OSTER LANE, CONCORD, ON L4K 2C1 CANADA
TEL: (905) 660-9775 FAX: (905) 660-9744
www.h2flow.com

THIS DRAWING IS THE PROPERTY OF H2FLOW EQUIPMENT INC. AND SHALL NOT BE COPIED OR TRANSFERRED WITHOUT THE WRITTEN CONSENT OF H2FLOW EQUIPMENT INC.

DRAWN BY: JC	DATE: 01/28/22	PROJECT NAME: EUREKA STP CONTAINERIZED MBBR NUNAVUT	TITLE: GENERAL ARRANGEMENT DRAWING
APP'D BY: LB	DATE: 01/28/22		DRAWING No.: Q-28520-50-10
SCALE: NTS		ALL DIMENSION ARE IN INCHES UNLESS OTHERWISE SPECIFIED	REV: 2
			SHEET 5 OF 6

REV	DESCRIPTION	DATE	BY	APP'D
0	FOR REFERENCE ONLY	01/28/22	JC	LB
1	REVISED AS PER COMMENTS	02/10/22	JC	LB
2	REVISED AS PER COMMENTS	05/09/22	JC	LB

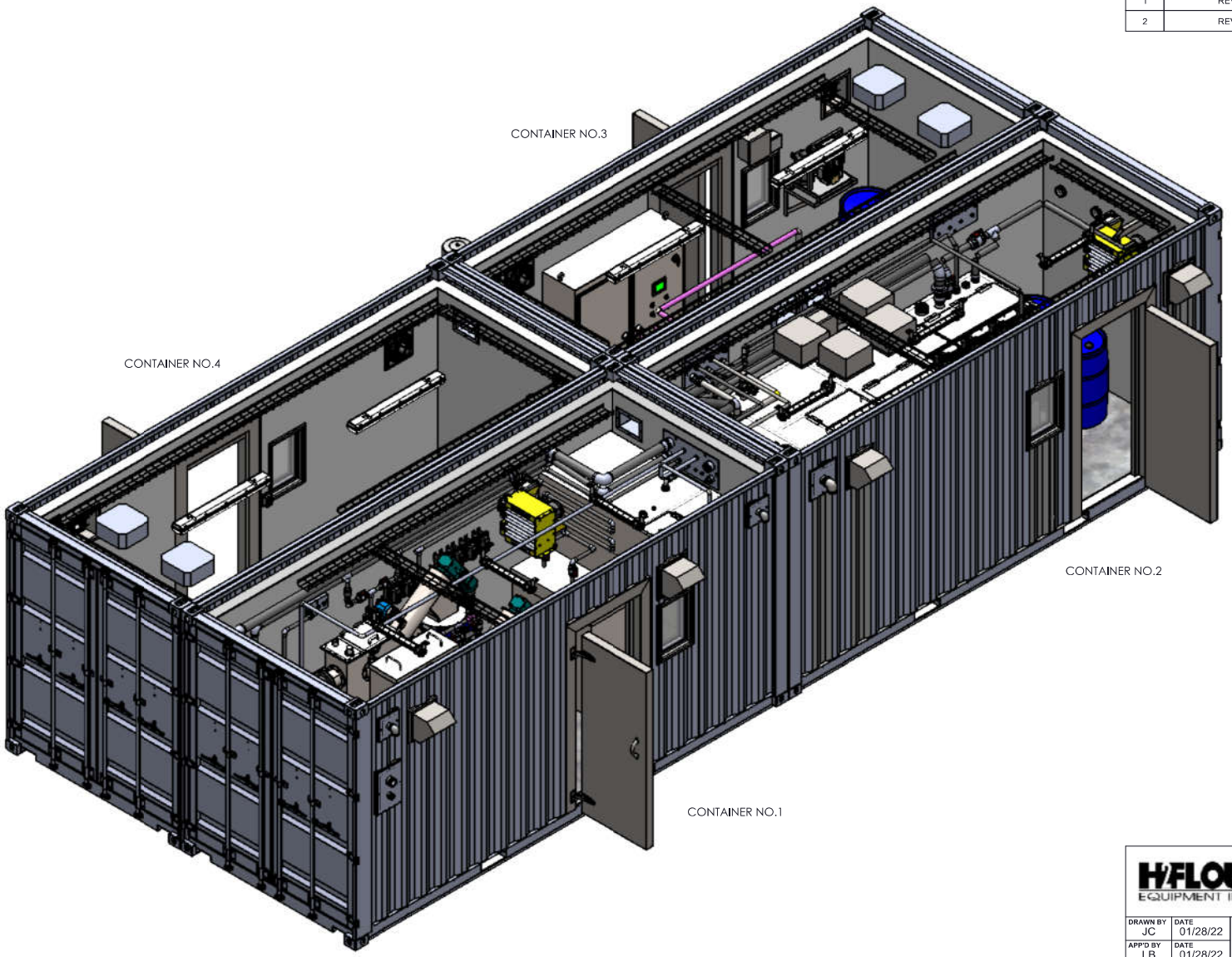

H2FLOW EQUIPMENT INC.
WATER AND WASTEWATER TREATMENT EQUIPMENT
560 OSTER LANE, CONCORD, ON L4K 2C1 CANADA
TEL: (905) 660-9775 FAX: (905) 660-9744
www.h2flow.com

THIS DRAWING IS THE PROPERTY OF H2FLOW EQUIPMENT INC. AND SHALL NOT BE COPIED OR TRANSFERRED WITHOUT THE WRITTEN CONSENT OF H2FLOW EQUIPMENT INC.

DRAWN BY: JC	DATE: 01/28/22	PROJECT NAME: EUREKA STP CONTAINERIZED MBBR NUNAVUT	TITLE: GENERAL ARRANGEMENT DRAWING
APP'D BY: LB	DATE: 01/28/22		DRAWING No.: Q-28520-50-10
SCALE: NTS			REV: 2
		ALL DIMENSION ARE IN INCHES UNLESS OTHERWISE SPECIFIED	SHEET 6 OF 6

REV	DESCRIPTION	DATE	BY	APP'D
0	FOR REFERENCE ONLY	11/17/22	JC	LB
1	REMOVED BRINE LINE FLOWMETER	05/15/23	JC	LB

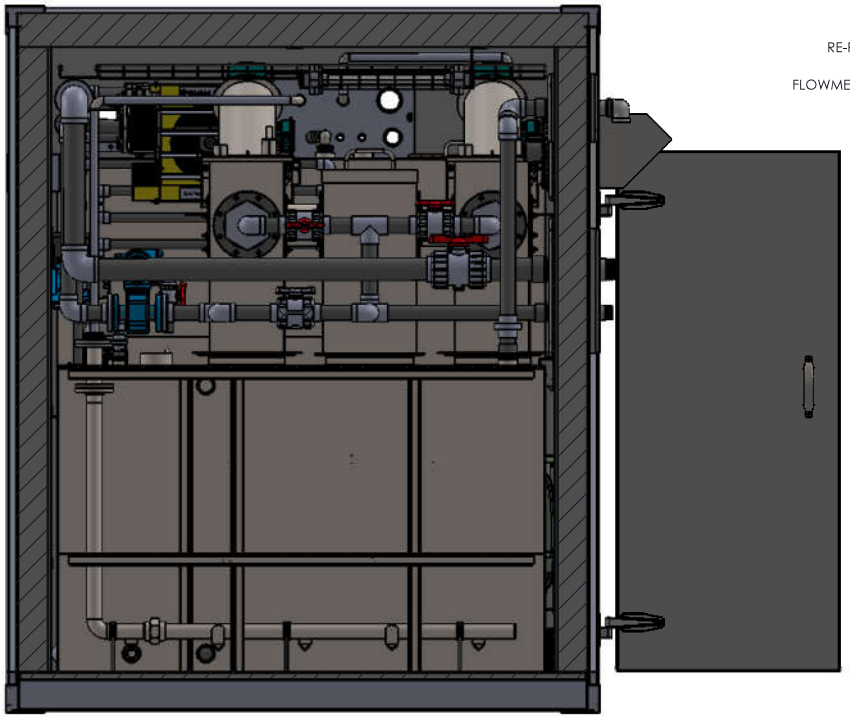

SECTION A-A
SCALE 1 : 20

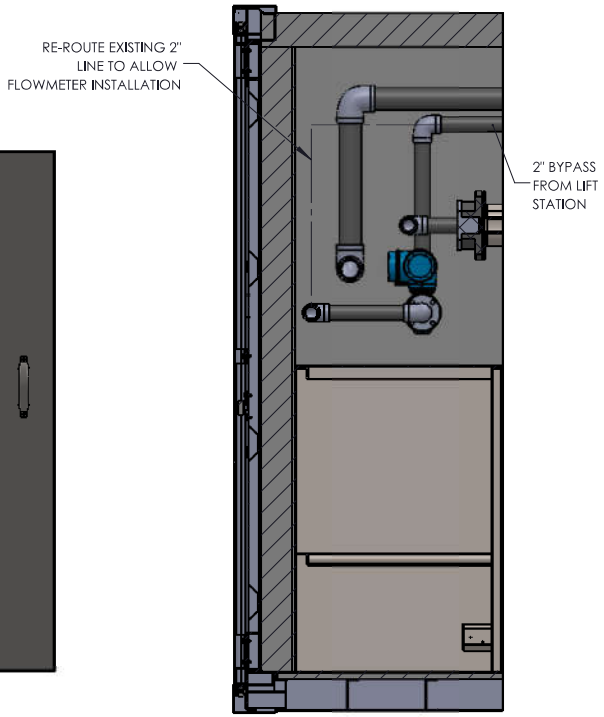

SECTION D-D
SCALE 1 : 20

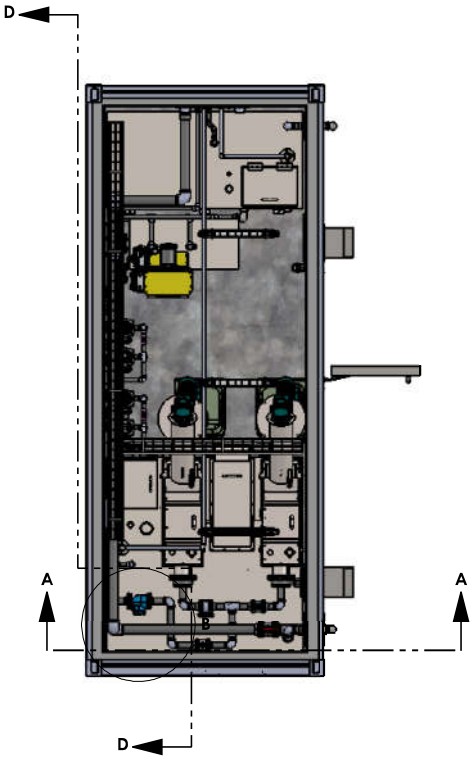

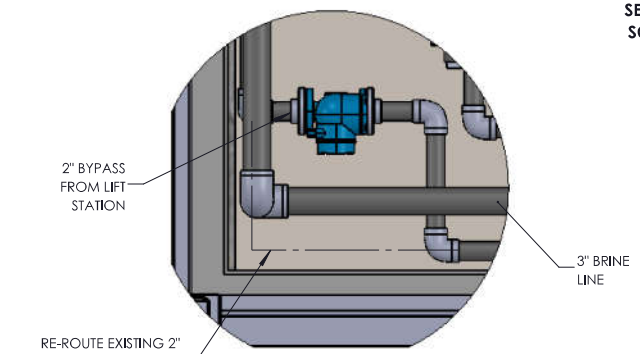

DETAIL B
SCALE 1 : 16

H2FLOW EQUIPMENT INC.

WATER AND WASTEWATER TREATMENT EQUIPMENT
560 OSTER LANE, CONCORD, ON L4K 2C1 CANADA
TEL: (905) 660-9775 FAX: (905) 660-9744
www.h2flow.com

THIS DRAWING IS THE PROPERTY OF H2FLOW EQUIPMENT INC. AND SHALL NOT BE COPIED OR TRANSFERRED WITHOUT THE WRITTEN CONSENT OF H2FLOW EQUIPMENT INC.

DRAWN BY: JC	DATE: 11/17/22	PROJECT NAME: EUREKA STP CONTAINERIZED MBBR NUNAVUT	TITLE: CONTAINER NO. 1 FLOWMETER ADDER
APP'D BY: LB	DATE: 11/17/22		DRAWING No.: Q-28520-51-30
SCALE: NTS		ALL DIMENSION ARE IN "mm" UNLESS OTHERWISE SPECIFIED	REV: 1
			SHEET 1 OF 1

Section 3

Equipment

Section 3.1

Wastewater Screening

Section 3.1.1

Screw Screen

REV	DESCRIPTION	DATE	BY	APP'D
0	FOR REFERENCE ONLY	02/08/22	JG	JC

MCB 200NB SCREEN SETUP

CONFIGURATION #1: RIGHT HANDED SETUP

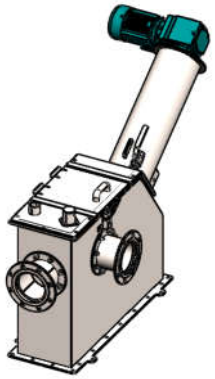

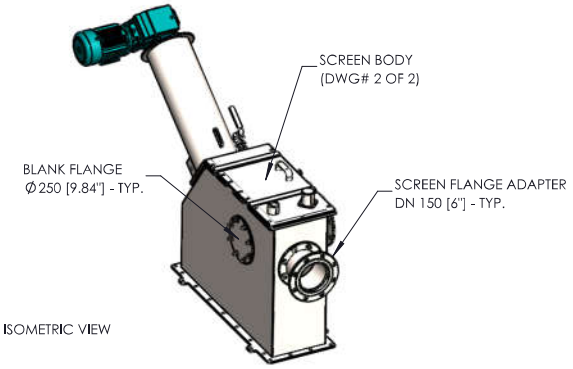

ISOMETRIC VIEW

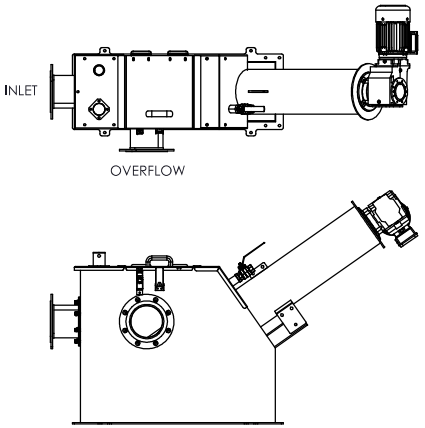

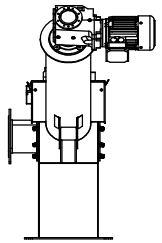

CONFIGURATION #2: LEFT HANDED SETUP

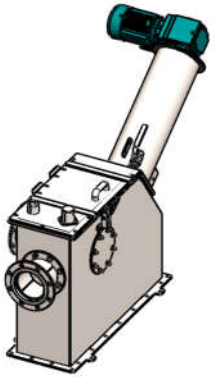

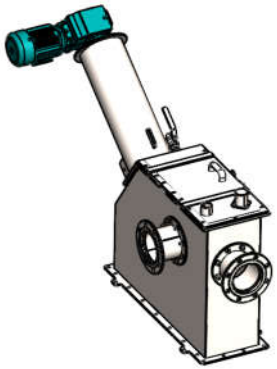

ISOMETRIC VIEW

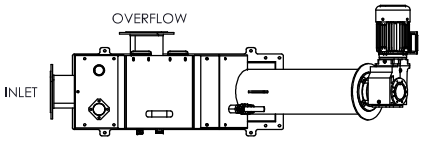

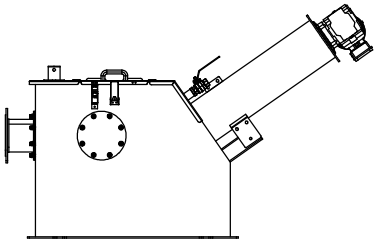

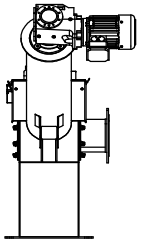

H2FLOW EQUIPMENT INC.

WATER AND WASTEWATER TREATMENT EQUIPMENT
560 OSTER LANE, CONCORD, ON L4K 2C1 CANADA
TEL: (905) 660-9775 FAX: (905) 660-9744
www.h2flow.com

THIS DRAWING IS THE PROPERTY OF H2FLOW EQUIPMENT INC. AND SHALL NOT BE COPIED OR TRANSFERRED WITHOUT THE WRITTEN CONSENT OF H2FLOW EQUIPMENT INC.

DRAWN BY: JG	DATE: 02/08/22	PROJECT NAME: H2FLOW EQUIPMENT STANDARD DRAWING	TITLE: GENERAL ARRANGEMENT - MCB-200NB SCREEN
APP'D BY: JC	DATE: 02/08/22		DRAWING No.: MCB200-NB-00
SCALE: NTS		ALL DIMENSION ARE IN "mm" UNLESS OTHERWISE SPECIFIED	REV: 0
R10	VERSION 1	APRIL 07, 2021	SHEET 1 OF 2

MCB 200 BODY

REV	DESCRIPTION	DATE	BY	APP'D
0	FOR REFERENCE ONLY	02/08/22	JG	JC

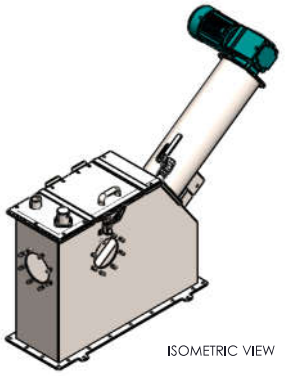

ISOMETRIC VIEW

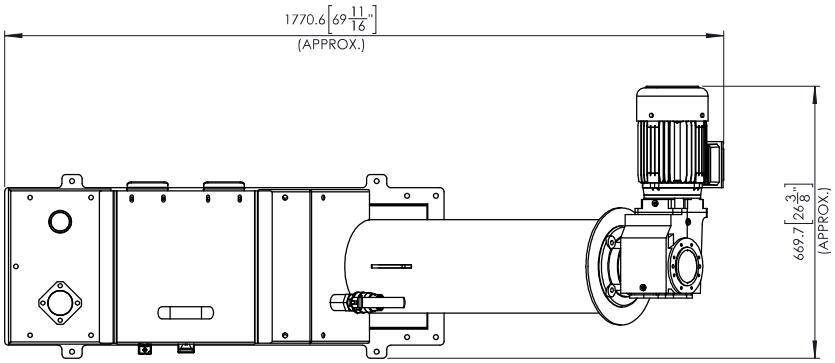

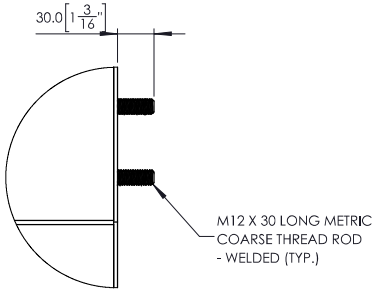

DETAIL A
SCALE 1 : 4

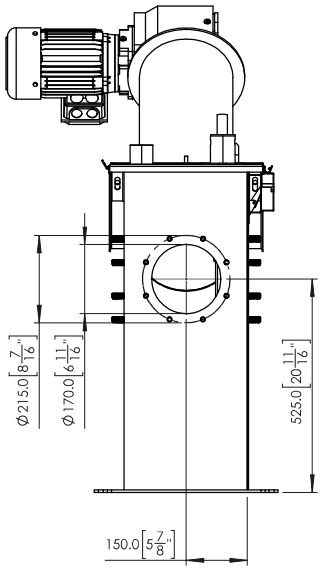

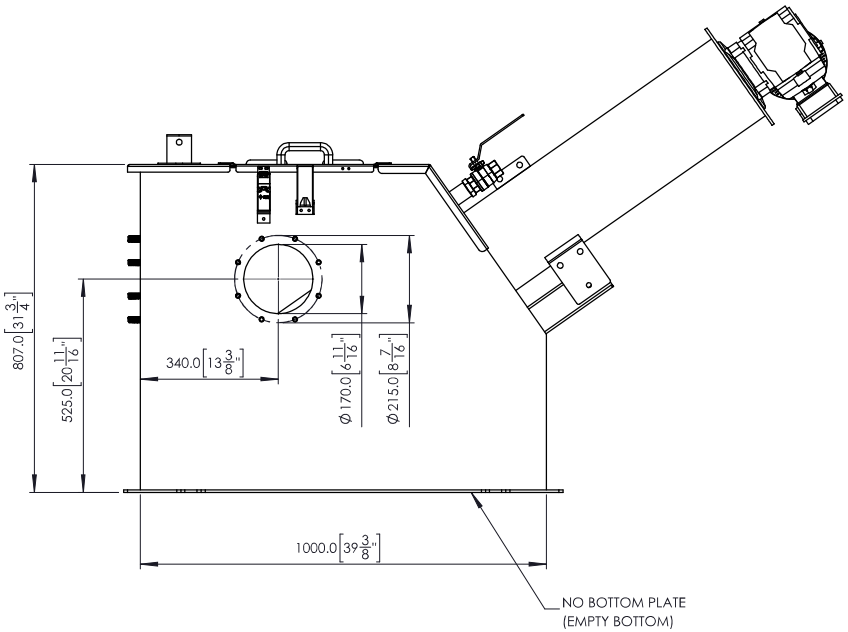

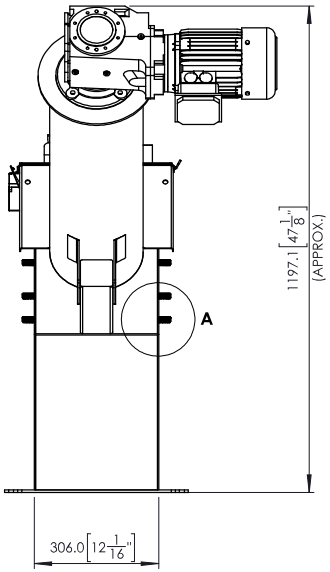

H2FLOW EQUIPMENT INC.

WATER AND WASTEWATER TREATMENT EQUIPMENT
580 OSTER LANE, CONCORD, ON L4K 2C1 CANADA
TEL: (905) 660-9775 FAX: (905) 660-9744
www.h2flow.com

THIS DRAWING IS THE PROPERTY OF H2FLOW EQUIPMENT INC. AND SHALL NOT BE COPIED OR TRANSFERRED WITHOUT THE WRITTEN CONSENT OF H2FLOW EQUIPMENT INC.

DRAWN BY: JG	DATE: 02/08/22	PROJECT NAME: H2FLOW EQUIPMENT STANDARD DRAWING	TITLE: GENERAL ARRANGEMENT - MCB-200NB SCREEN
APP'D BY: JC	DATE: 02/08/22		DRAWING No.: MCB200-NB-00
SCALE: NTS		ALL DIMENSION ARE IN "mm" UNLESS OTHERWISE SPECIFIED	REV: 0
R10	VERSION 1	APRIL 07, 2021	SHEET 2 OF 2

REV	DESCRIPTION	DATE	BY	APP'D
0	FOR MFG ONLY	04/05/22	JG	JC

MANUFACTURING NOTES:
1. QTY: 1 UNIT
2. MATERIAL: SS 316, 11 GAUGE FOR BODY & COVER LID. 1" X 1" X 3/16" THICKNESS STRUCTURE ANGLE
3. ALL DIMENSIONS ARE EDGE TO EDGE UNLESS OTHERWISE NOTED.
4. TOLERANCES: ANGULAR MACH. ±1°, BEND ± 1°, DECIMAL ±1.5mm OR ±1/16"
5. ALL WELDS MUST BE MIN.3/16" CONTINUOUS MIG/TIG WELDS (FLARE BEVEL WELD WHERE NECESSARY)
6. ALL WELDS MUST BE UNIFORM AND AESTHETICALLY PLEASING, CONFORM TO CWB/ASME
7. REMOVE ALL SHARP EDGES, CLEAN AND GRINDING FLAT ALL WELDINGS WHEN APPLICABLE

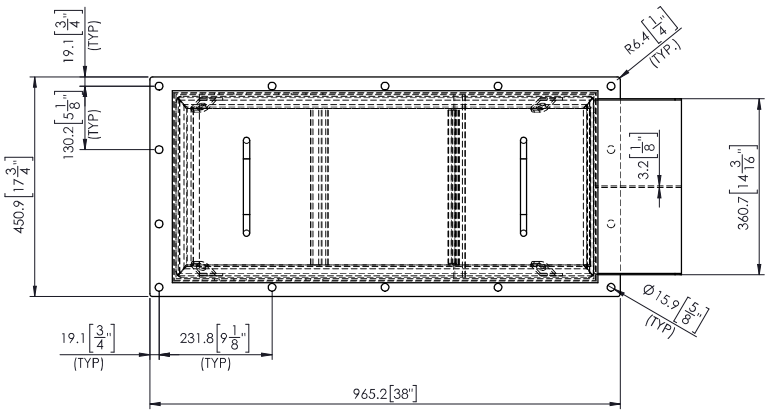

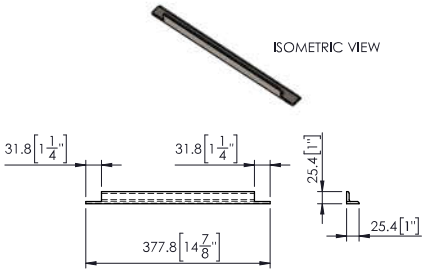

SUPPORT ANGLE - WELDED ON WALLS

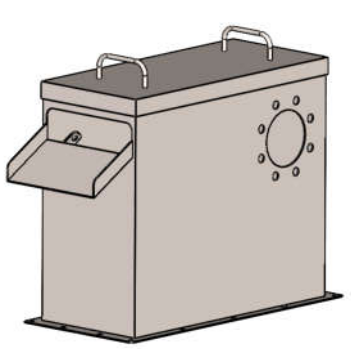

ISOMETRIC VIEW #1

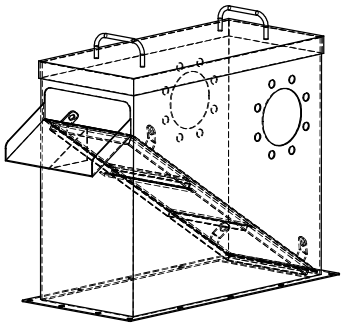

ISOMETRIC VIEW #2

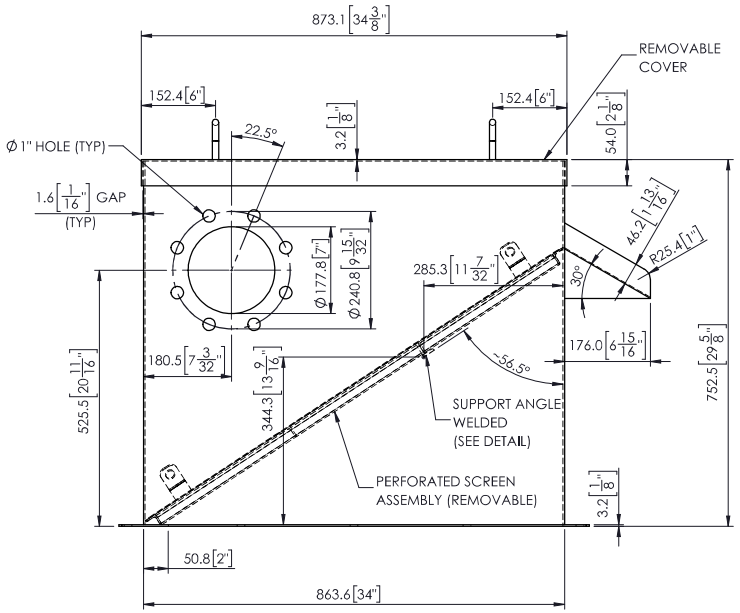

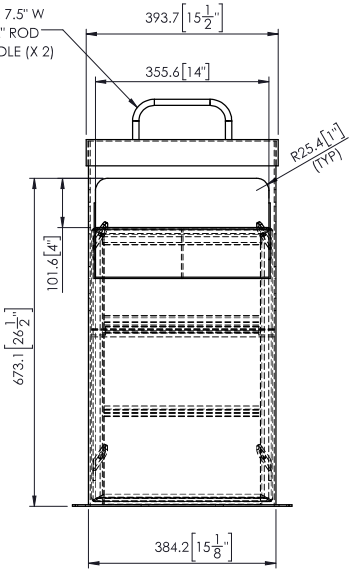

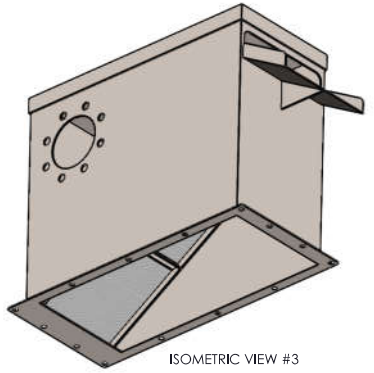

ISOMETRIC VIEW #3

H2FLOW EQUIPMENT INC.
WATER AND WASTEWATER TREATMENT EQUIPMENT
580 OSTER LANE, CONCORD, ON L4K 2C1 CANADA
TEL: (905) 660-9775 FAX: (905) 660-9744
www.h2flow.com

THIS DRAWING IS THE PROPERTY OF H2FLOW EQUIPMENT INC. AND SHALL NOT BE COPIED OR TRANSFERRED WITHOUT THE WRITTEN CONSENT OF H2FLOW EQUIPMENT INC.

DRAWN BY: JG	DATE: 04/05/22	PROJECT NAME: EUREKA CONTAINERIZED MBBR NUNAVUT	TITLE: GENERAL ARRANGEMENT - BAR SCREEN
APP'D BY: JC	DATE: 04/05/22		DRAWING No.: Q-28520-32-02
SCALE: NTS		ALL DIMENSION ARE IN "mm" UNLESS OTHERWISE SPECIFIED	REV: 0
R10	VERSION 1	APRIL 07, 2021	SHEET 1 OF 2

REV	DESCRIPTION	DATE	BY	APP'D
0	FOR MFG ONLY	04/05/22	JG	JC

PERFORMED SCREEN DETAILS - 1 UNIT (SCALE 1:10)
(- WELDED ON 1"X 1" ANGLE FRAME)

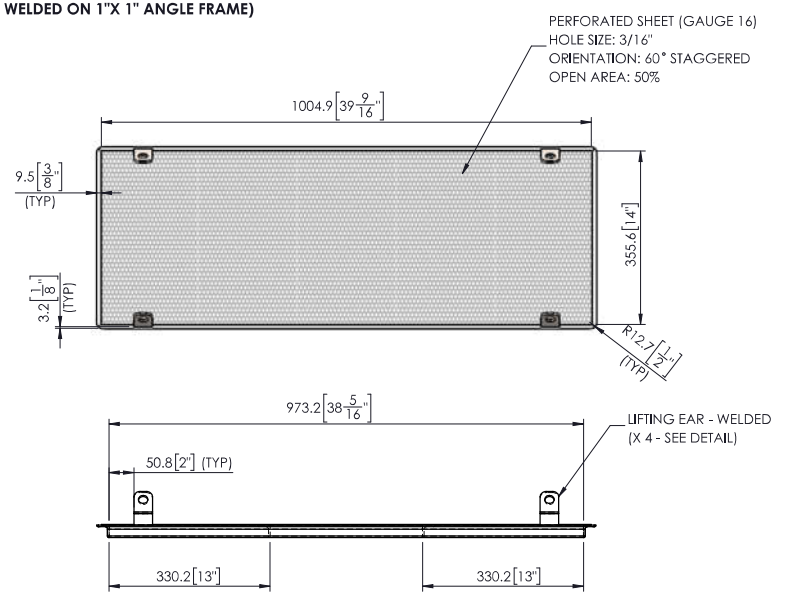

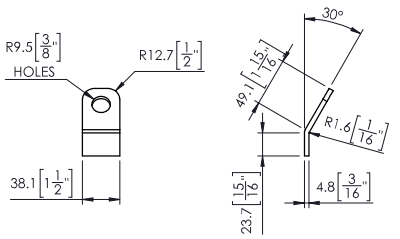

LIFTING EAR (SCALE 1:5)

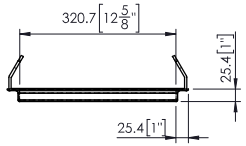



ISOMETRIC VIEW #4



ISOMETRIC VIEW #5

BAR SCREEN SCRAPER (SCALE 1:2)
(QTY: 1 PC)

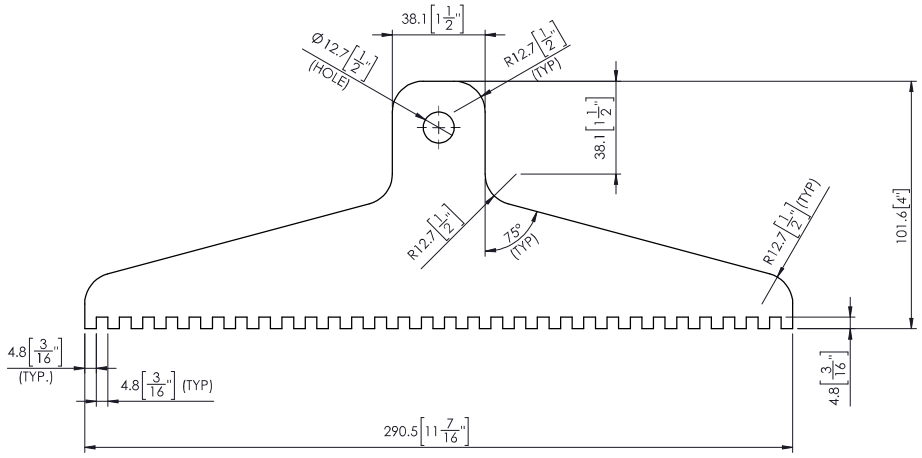

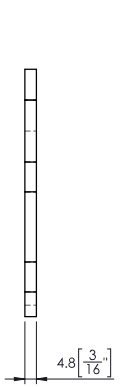

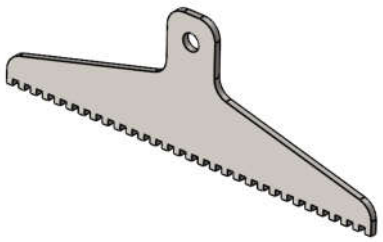

ISOMETRIC VIEW #6

H2FLOW EQUIPMENT INC.

WATER AND WASTEWATER TREATMENT EQUIPMENT
580 OSTER LANE, CONCORD, ON L4K 2C1 CANADA
TEL: (905) 660-9775 FAX: (905) 660-9744
www.h2flow.com

THIS DRAWING IS THE PROPERTY OF H2FLOW EQUIPMENT INC. AND SHALL NOT BE COPIED OR TRANSFERRED WITHOUT THE WRITTEN CONSENT OF H2FLOW EQUIPMENT INC.

DRAWN BY: JG	DATE: 04/05/22	PROJECT NAME: EUREKA CONTAINERIZED MBBR NUNAVUT	TITLE: GENERAL ARRANGEMENT - BAR SCREEN
APP'D BY: JC	DATE: 04/05/22		DRAWING No.: Q-28520-32-02
SCALE: NTS			REV: 0
		ALL DIMENSION ARE IN "mm" UNLESS OTHERWISE SPECIFIED	SHEET 2 OF 2

R10 VERSION 1 APRIL 07, 2021

OPERATION AND MAINTENANCE MANUAL

MCB-200 SCREW SCREEN



Table of Contents

1.0 SCREEN DATA 3
1.1 Screw Screen Specifications 3
1.2 Description 4
1.3 Screw Screen Operation 4
1.4 System Components 6
2.0 TROUBLESHOOTING 6
3.0 SAFETY 7
3.1 Hazards 7
3.2 Safe Use 8
3.3 Emergency Safety Devices 9
4.0 MAINTENANCE 9
4.1 General 9
4.2 Periodic Maintenance 9
4.3 Technical Instructions and Repair 10
4.3.1 How to replace the Gearmotor 10
4.3.2 Screw Screen Removal Procedure 11
4.4.5 Brush Replacement 11
4.4.6 Screen Basket Replacement 12
4.5 Lubrication 13
5.0 SPARE PARTS 14
6.0 TRANSPORT, STORAGE AND INSTALLATION 14
6.1 Lifting and transport 14
6.2 Installation Area 16
6.3 Installation 17
6.3.1 Electrical Installation 18
6.4 Long Term Storage 18
7.0 MAINTENANCE CHECKLIST 19
8.0 WARRANTY 19

1.0 SCREEN DATA

1.1 Screw Screen Specifications

Standard Unit Data

SS Box Height:	815 mm
SS Box Width:	300 mm
SS Box Length:	1000 mm
Discharge Height:	920 mm
Screw Length:	1900 mm
Opening:	3 mm
Inclination:	45°
Cover Type:	Removable
Hydraulic Throughput:	Up to 15 m^3/hr
Screen Rotation Speed:	10 rpm

Drive Unit (Electrical Motor, Gear Box and Drive)

WEG Motor

Motor:	0.25 kW
Enclosure:	Class 1 Division 1 (TEFC-XP)
Voltage:	575 Volts, 3 Phase, 60 Hz

NORD Gear Reducer

Model	SK1SI50-IEC71-71S/4

1.2 Description

The Screw Screen is designed to provide separation of solids from liquids, typically as pre-treatment for wastewater. The screen will remove solids larger than the specified screen opening. The screen is placed in a stainless steel tank where water is flowing. The unit is designed to have a 45º inclination. The influent water flow passes through the fixed screen present in the lower section of the machine. The screened effluent continues after the screen in the same channel. Within the screen, a rotating screw with brushes clean the screen and convey the captured solids upwards to the screenings discharge outlet. This is a continuous process throughout the operation of the Screw Screen as shown in Figure 1.

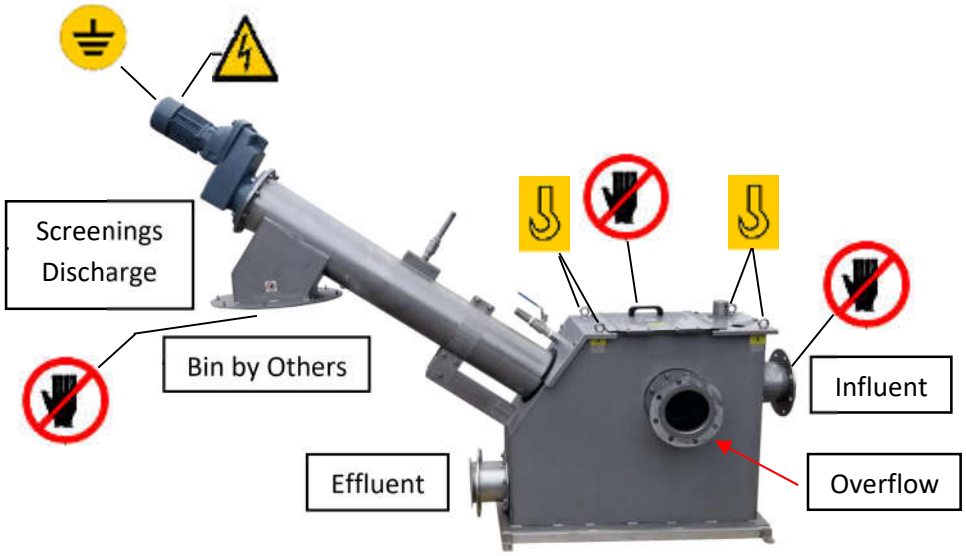

Figure 1: Screw Screen description

1.3 Screw Screen Operation

WARNING:

Before operating the machine, please check that all potential blocking conditions are removed. Check that all safety devices are present and operational.

CHECKS AND STARTUP

Before starting the Screw Screen, please complete the following:

1. Check the positioning and grounding of the machine. Check that all bolts are fastened.
2. Check all connections.
3. Check electric devices and the electric motor box to ensure that they are totally sealed.
4. Check that all covers are closed.
5. Check rotation of the screw. It must be as per the sticker indicator (see Figure 2).



Figure 2: Rotation of the screw

Warning:

During the initial startup, it is necessary to check for any working defects i.e. vibration, high noise level, wrong rotation direction, etc.

The startup procedure must be executed each time the machine has remained stopped for a long period of time (one week or more).

It is necessary to read all safety rules before operation.

1.4 System Components

The Screw Screen is made almost entirely of stainless steel construction. The water enters the unit at the front of the screw. Water flows through a perforated screen basket. The filtered water then exits through the outlet. The rotating screw scrapes the screen with brushes and collect the solids. The solids are transported up the length of the unit. The moving screw is powered by the gearmotor. The solids are deposited at the screenings discharge.

2.0 TROUBLESHOOTING

PROBLEM					
MACHINE DOES NOT START AND / OR ELECTRIC MOTOR DOES NOT WORK					
	THE MACHINE WORKS, BUT AFTER A FEW SECONDS THE MOTOR STARTER RELAY GIVES THE SIGNAL TO SWITCH OFF THE MOTOR				
		GEARMOTOR ROTATES, BUT THE SCREW CANNOT MOVE			
			SCREENINGS ARE NOT DISCHARGED FROM THE OUTLET		
				Cause	**Solution**
●				Lack of electric power	Switch on electric power
●				Wrong electric connections	Correct the electric connections
●	●			Bad regulation of electric motor limit switch	Regulate it
●				Very low tension, very high frequency	Check wire conditions
●		●		Screw is blocked	Remove the material causing blockage
	●			Screen is clogged	Clean it
●		●		Gearmotor damaged	Check that the electric motor is connected Voltage and phases must be as per electric motor manufacturer label
			●	Solids outlet clogged	Remove the material causing the blockage

3.0 SAFETY

3.1 Hazards

The Screw Screen is supplied with covers as safety equipment. Extra precautions should be taken to ensure that all personnel understand the safe use of the unit.



Figure 3: Dangerous zones

WARNING:

Never put hands or objects inside the solids outlet.

Areas shown in Figure 3 are all dangerous access points. Avoid contact.

Safety measures include:

- **Upper covers**
- **Safety notices**

3.2 Safe Use

To avoid accidents, read the following information:

1. The Screw Screen can be used only by qualified and trained personnel.
2. Connections and safety checks must be done by qualified and trained personnel.
3. All components must be grounded and the entirety of the machine must be secured to the floor. The external metallic part of the machine must be secured to the floor.
4. During use, all personnel must remain at a safe distance.
5. Before starting the machine, it is necessary that all safety devices are connected and working. The machine must be in working condition.
6. Before each use of the unit, the safety devices must be checked and be in proper working conditions.
7. In the case of defects, especially on safety devices, the operator must inform a supervisor immediately.
8. If the defect poses a safety risk, the machine must be stopped immediately. In the case of an anomaly, stop the unit immediately.
9. During use, all working personnel must be informed before beginning operation or if any changes occur.
10. The machine can be used only for its intended purpose.
11. Every modification regarding the use or the safety conditions can only be done by personnel from H2Flow. H2Flow refuses every responsibility for unauthorized modifications or damages caused from these modifications.
12. It is forbidden to remove safety devices from the machine.
13. Personnel in charge must wear proper safety equipment i.e. gloves, safety shoes, goggles, etc.
14. Disconnect electric power before maintenance of the machine.
15. To avoid accidental startup of the machine during inspection/ cleaning/ maintenance of the machine, it is necessary to turn the general switch OFF and to push the emergency button to stop the machine.
16. It is necessary to inspect the machine at a minimum of one time per day, or one time each working shift, to check for damages or defects.
17. Ensure that safety devices, safety notices and the nameplate are always readable.
18. It is forbidden to remove safety and warning notices.
19. It is forbidden to start the machine with open safety devices or to open them during operation.
20. Touching rotating parts of the machine can cause injuries.
21. Never put hands inside the outlet of the machine.
22. It is forbidden to use the machine without the upper covers completely bolted.

3.3 Emergency Safety Devices

If not provided, the unit should be provided with an emergency button (red colour) to stop the machine. Push this button when the machine must stop immediately. The emergency button must be present near the machine and must be easily approachable.

4.0 MAINTENANCE

4.1 General

The procedures for inspection and maintenance are explained in this section.

Refer to the control panel manual for instructions related to the electrical control of the equipment.

Before any maintenance, ensure the electrical power is switched OFF.

Tag out and lock out.

Use only spare parts supplied by H2Flow to replace any original parts.

4.2 Periodic Maintenance

The following maintenance should be done on a regular basis:

- After first ten hours of work:
  - Check for unusual noises from the screw
  - Check noise levels of motor and gearbox
- Daily maintenance:
  - Check for brush wear and ensure brushes are able to clean the screen
  - Check temperature of gearbox and drive motor
  - Ensure no debris/objects are obstructing moving parts
  - Ensure screen is running smoothly, no excess noise, etc.
  - Visually inspect screw, thus ensuring no damage has occurred
  - Visually inspect for missing bolts, etc., thus ensuring no moving parts are loose
  - Should any obstruction occur, stop screen and isolate prior to opening the maintenance covers. Further inspect to ensure no large objects are affecting operation

- Monthly maintenance:
  - Inspect screen grid for wear/damages
  - Ensure that the two top bearings are greased on a monthly basis
  - Gearbox oil level - monthly check
  - The checks have to be documented in the enclosed table.

- Every six months:
  - Check for wear on screw
  - Check bolts for tightening
  - Greasing of the gearmotor

The checks must be documented in the Maintenance Checklist table found in section 6.0.

4.3 Technical Instructions and Repair

This part of the manual gives detailed technical instructions how to adjust and maintain the unit.

4.3.1 How to replace the Gearmotor

1. Unscrew bolt securing the shaft motor
2. Pull gear motor off shaft – make sure you do not lose the keyway



Figure 4: Gearmotor

4.3.2 Screw Screen Removal Procedure

To remove screw screen from tank:

1. Open all the covers and clean with plenty of water.
2. Unscrew the bolts supporting the screw.
3. Hang the screw screen from the lifting straps with suitable lifting equipment (A) arranged so that it allows the screen to be lifted with an angle of about 45° (angle of 35° for CFT model) with the ground and (B) place the screw screen horizontally on the ground.
4. **Please note, MCB models do not have lifting eyes on the screw screen, lifting straps are required for removal procedure.**

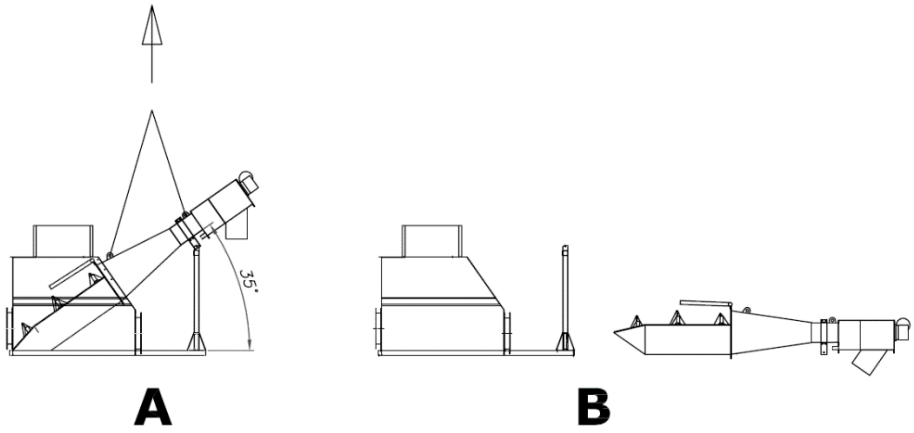

Figure 5: Screen Removal Procedure*

Note: CFT model is shown.

4.4.5 Brush Replacement

Follow screw screen removal sequence

1. Unscrew the bolts (A in photo below) of the brushes as shown.
2. Mount the new brushes and tight the bolts.
3. Follow the instruction in the reverse order to mount the screw back into the machine again.

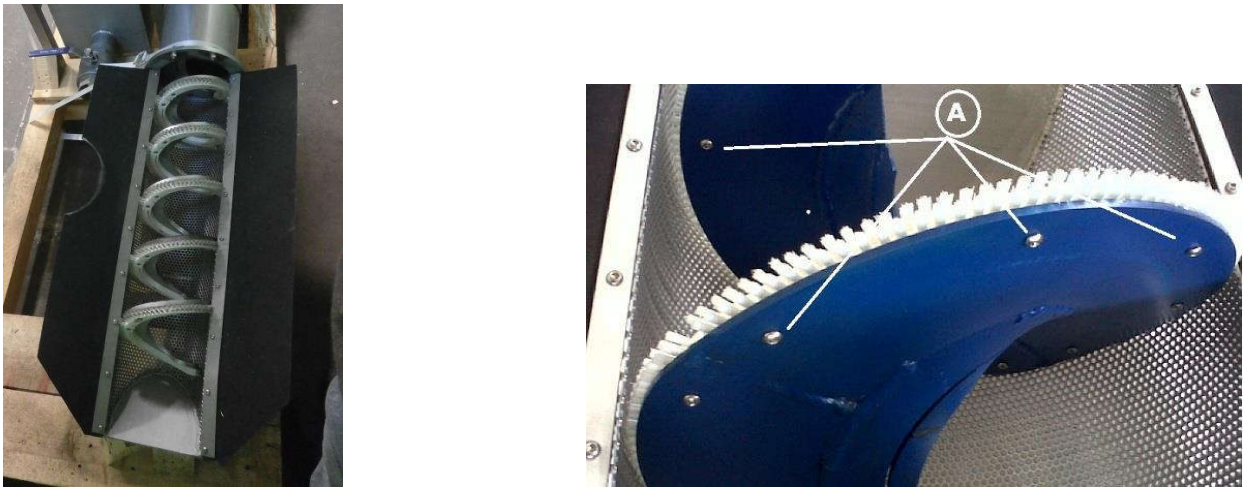

Figure 6: Brush Replacement

4.4.6 Screen Basket Replacement

Follow screw screen removal sequence

1. Remove the screen basket bolts (see photo below).
2. Slide screen basket off
3. Install new screen basket

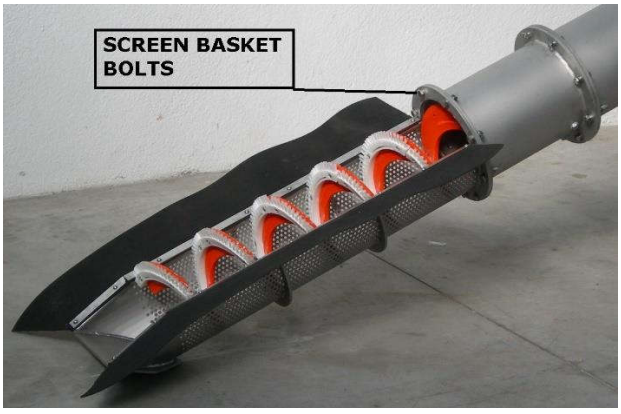

Figure 7: Screen Basket Replacement

4.5 Lubrication

The operating temperature is from 0° to 35°C;

Gear reduction unit is supplied with a first oil filling and are equipped with oil level, outlet and breather plugs.

Synthetic oil is used. The trade mark is SHELL TIVELA OIL 320. If a different oil is to be used as replacement, it must have the same propriety of the original oil, as listed in the table below.

Shell Tivela Oil 320	
Viscosity Class ISO (iso 3448)	320
Kinematic Viscosity 40°C cSt 100°C cSt (ASTM D445)	 320 56.4
Viscosity Index (ASTM D2270)	245
Volumic mass @ 15° (Kg/dm3) (ASTM D 1298)	1.076
Flash point (ASTM D92)	240 °C
Pour point (ASTM D97)	-33°C

Avoid any mixing between oil of different brands

Oil-change interval [hours]:

Oil temperature	Mineral oil	Synthetic Oil
< 65°C	8000	25000
65° - 80°C	4000	15000
80° - 95°C	2000	12500

5.0 SPARE PARTS

The following describes the recommended spares parts:

Part	Quantity
Brushes	1 set
Screen Basket	1
Reducer	1
Motor	1

6.0 TRANSPORT, STORAGE AND INSTALLATION

6.1 Lifting and transport

The unloading and positioning of the machine must be carried out with a lifting device that is appropriate for the weight and size of the machine (for the weight and dimensions, refer to attached drawing).

The lifting of the machinery must be done via the eyebolts attached to the machine.

MODELS WITH MACHINE SUPPLIED IN ONE ASSEMBLED PART

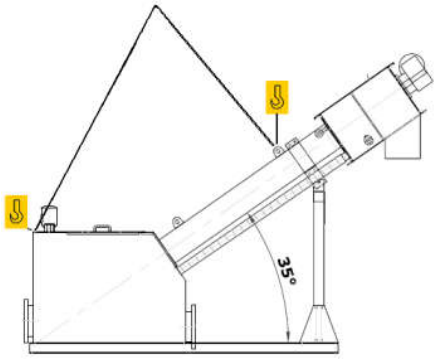

Figure 8: Lifting Procedure – One Piece

MODELS WITH MACHINE SUPPLIED IN TWO PARTS

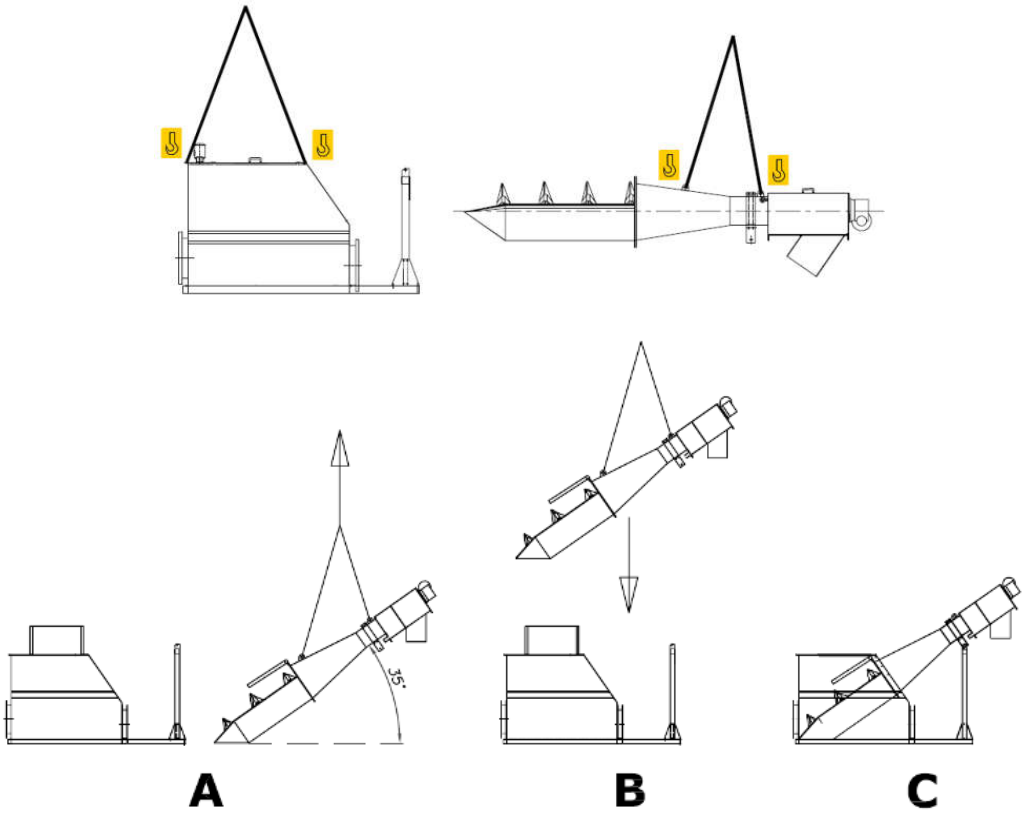

Figure 10: Lifting Procedure – Two Pieces

Note: CFT model is shown. MCB models do not have lifting eyes on the screw screen, lifting straps are required for lifting procedure.

1) PLACE THE TANK IN THE FINAL POSITION (PICTURE **A**)
2) REMOVE ALL THE COVERS
3) PLACE THE SCREEN INSIDE THE TANK: for this purpose use a pre set lifting belts or chains, in order to lift the screen with an inclination of about 45° - pictures **B** and **C**)
4) RE ASSEMBLE THE COVERS

Lifting and rigging must be done by competent persons.

WARNING:

Person in charge of lifting and rigging of the machine must pay attention to prevent damage to goods.

Check the operation of the lifting system prior to moving the machine to avoid damage to the machine or operator.

Do not use a lifting chain that will damage the surface of the machine. If damage does occur, repairs must be made before use. Transport packing should not be removed until the machine is close to the installation area.

6.2 Installation Area

The area destined for the placement of the machine must be provided by the user with all appropriate connections (electrical, etc.) for the proper operation of the machine. It is the responsibility of the user that the machine destination follows all regulations and laws.

6.3 Installation

Preferably, install the unit in a dry, clean and frost-free area with a flat concrete surface.

Incorrect grounding could cause damage to the device and to people therefore it is necessary to follow the installation directions carefully.



Figure 12: Suggested Anchor Bolt Placement

The machine, lifted through suitable equipment by means of eyebolts / lifting strap and placed on the suitable area.

The fixing of the machine is done through suitable anchor bolts / expansion wedges for each hole, on each side. Check the drawing before choosing the anchor bolts:

6.3.1 Electrical Installation

The Screw Screen is supplied with standard electrical components:

1. Electric motor
2. Motor starter relay (optional)
3. Electrical panel (optional)

WARNING:

Electric work must be executed by a trained professional. The Screw Screen must be disconnected from power sources while any changes or repairs are being done.

Check that the electrical voltage is the same as per the nameplate present on the electric motor. Electric cables must have the correct dimensions to be compatible to the electric motor.

Electric cables must be properly secured and protected.

6.4 Long Term Storage

In the case of long term storage:

1. Clean all parts of the machine thoroughly including the screen zones, compactor, inlet and outlets
2. Place the machine in a wooden storage box and store in a cool, dry location
3. To store the gearmotor, follow the instructions in the manufacturer manual
4. Before restarting the machine, proceed as per first start up.

7.0 MAINTENANCE CHECKLIST

All equipment should be checked on a regular basis for leaks and/or breaks. Frequency of maintenance items listed below should be conducted as needed for proper operation.

SCREW SCREEN	
Check for unusual noises from screw machine and gearbox	Daily
Check for brush wear and ensure brushes are able to clean the screen	Daily
Check temperature of gearbox and drive motor	Daily
Ensure no debris/objects are obstructing moving parts	Daily
Check for missing bolts	Daily
Check screen for wear/damage	Monthly
Check screw connections between rakes and chain links	Monthly
Grease two top bearings	Monthly
Check gearbox oil level	Monthly
Check for wear on screw	Every six months
Grease the gearmotor	Every six months

8.0 WARRANTY

H2flow will provide warranty against any defects in design, material or workmanship. The warranty shall extend for a period of 12 months from date of start-up but not exceeding 18 months from delivery date. Any warranty service shall be provided by our service department in Concord, ON.

Section 3.1.2

Screen Gear Drive

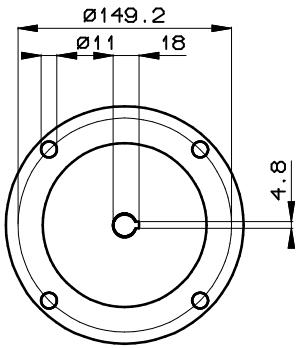

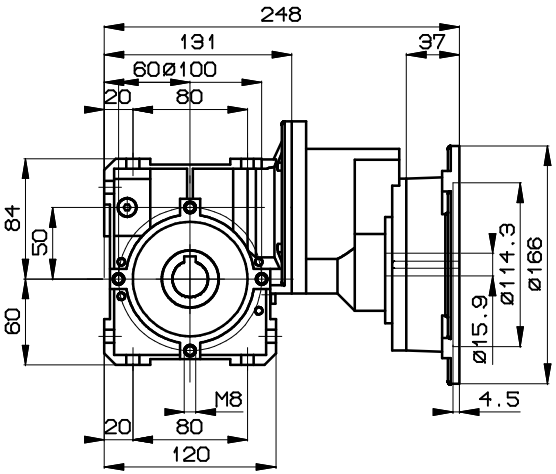

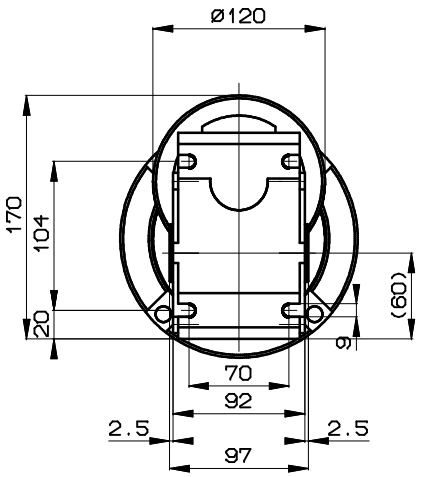

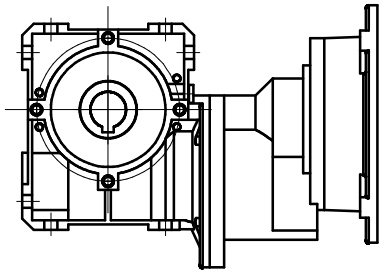

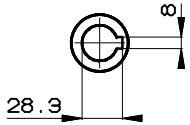

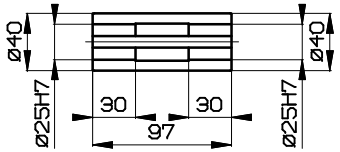

SK1S150/H10 - N56C

NORD

Nord Internet: http://www.nord.com

DRIVESYSTEMS

	Date	Name
Drawn	11/29/2021	Gavez

NC211123075813JU_D

Technical changes reserved!
This drawing is created with NORDCAD 9.2.4 s

Intelligent Drivesystems



FLEXBLOC™ & MINICASE® WORM DRIVES

Speed Reducer / Gear Motors

F1033

NORD DRIVESYSTEMS

FLEXBLOC™ & MINICASE® Speed Reducers

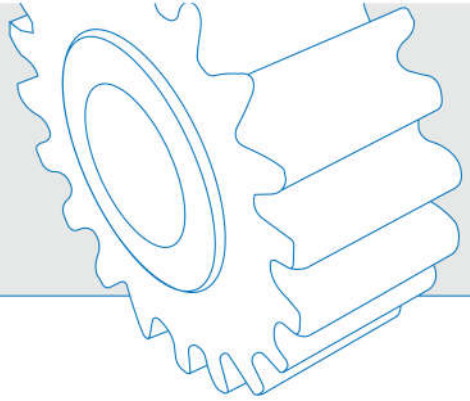

FLEXBLOC™ and MINICASE® Worm Gears

NORD modular worm gear products cover 5 industry standard center distances from 31 mm-75 mm (1.2 in-3.0 in) and range in torque capacity up to 3,779 lb-in. This product offering comes in a variety of standard, single worm, and compound worm ratios ranging from 5:1 to 10,000:1. The product family consists of the FLEXBLOC™ (SI Series) worm with universal gear housing and the MINICASE® (SMI Series) worm characterized by its smooth outer surface design and its separate footed and flanged gear housing. Exceptional modularity is guaranteed by offering a unified set of factory-stocked and easy-to-assemble accessory kits. This flexibility allows for a variety of input and output mounting options along with a large variety of output shaft options. The FLEXBLOC™ and MINICASE® worm gear products share many innovative design features.





FLEXBLOC™ Key Features:

- Factory-stocked worm-modules & accessory kits
- Universal foot and flange-mount housings
- Keyed hollow-bore units with solid shaft kits
- Adaptable to any mounting position (universal oil fill)
- Easy to assemble accessories
- NEMA, IEC, or solid shaft input as standard
- Accommodates stocked C-Face motors or brakemotors

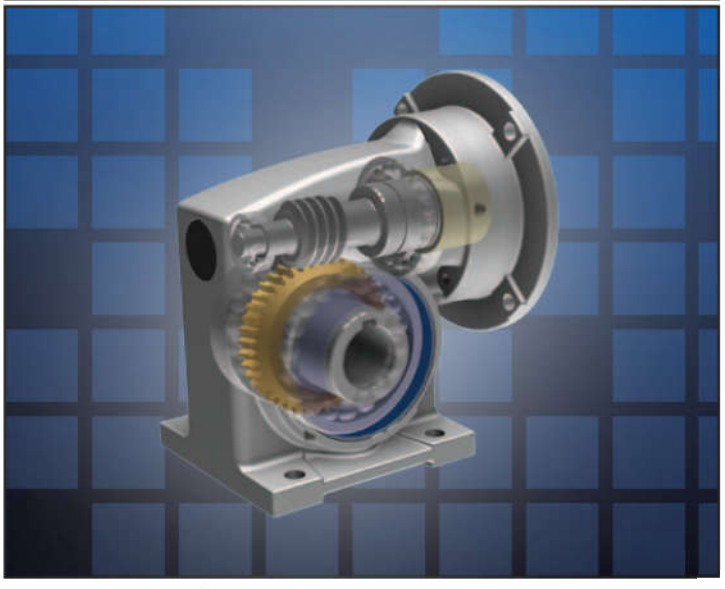



MINICASE® Key Features:

- Factory-assembled from stocked parts
- Separate smooth-bodied foot & flange-mount housings
- Keyed hollow-bore or one-piece solid shaft as standard
- Specific bores accommodate plug-in shafts
- Easy to assemble accessories
- NEMA, IEC, or solid shaft input
- Supplied as an integral motor or brakemotor (C-Face motorized options possible)

Product Features

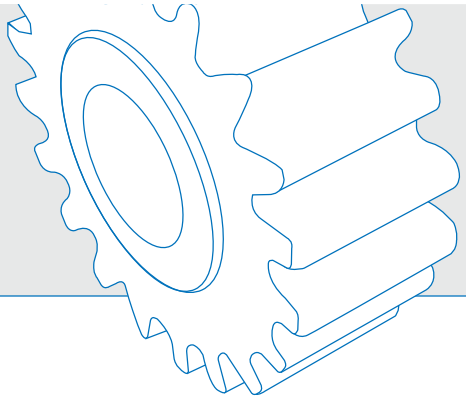

Dual Pinion Shaft Bearings
Two bearing supports maintain accurate gear and shaft alignment, isolate and protect motor bearings, and provide smooth/quite operation.

Worm Pinion Gear
Surfaced hardened alloy steel gears with an optimized tooth form maximize gear contact and provide long service life.

Alluminum Alloy Housing
Light weight, high strength, optimal heat dissipation and natural corrosion resistance. Flange or torque-arm mount options available.

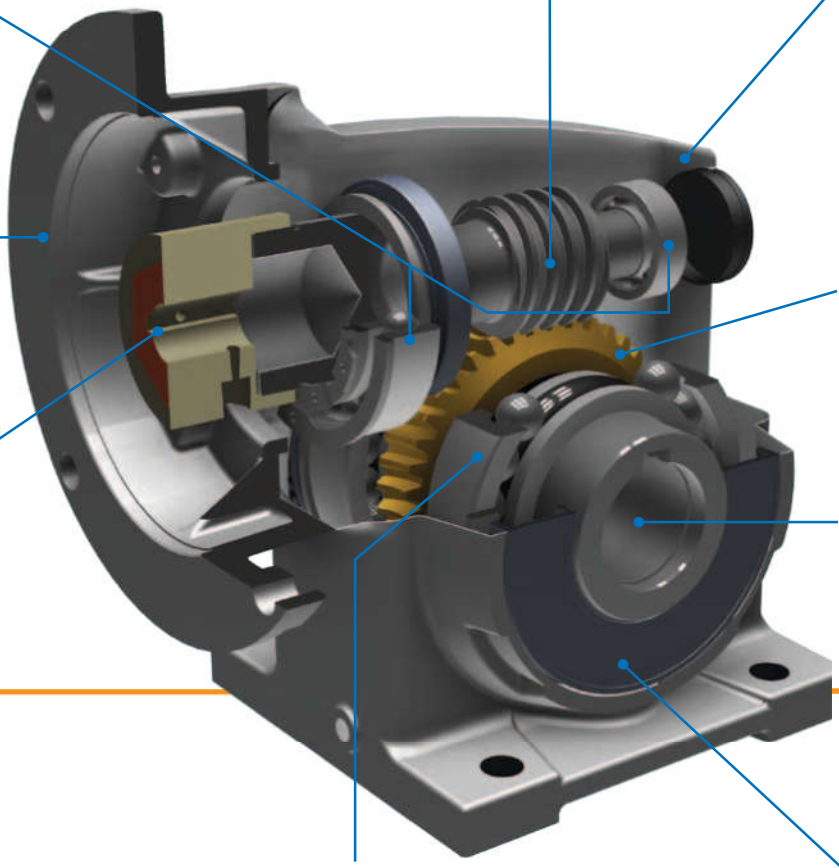

Input Configuration
NEMA, IEC and free input shaft designs are readily available. Integral motor mounting is optional. Adaptation to servo motors is possible.

Worm Gear
Fine-grained bronze alloy minimizes wear providing maximum strength and durability.

Motor Coupling
Guarantees accurate motor shaft alignment, minimizes fretting and provides a low backlash / high strength connection.

Output Shaft
Hollow bore and single-sided or double-sided shafted models are also available.

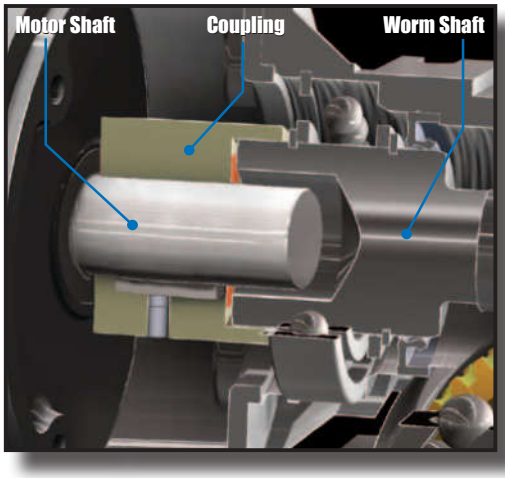

Output Bearings
Oversized bearings provide high radial and axial load capacities and long service life.

Oil Seals
Double-lip oil seals provide extra sealing and protection against the elements.

Advantages of the NORD Compact Coupled Unit

- Easy to assemble and disassemble.
- Eliminates fretting corrosion common to quill-mount inputs.
- Maintains shaft alignment and provides vibration-free torque transfer.
- Protects and isolates motor shaft and reducer shaft bearings.
- Provides a stiff, high-strength, near-zero backlash connection.
- Reduces the chance of bearing, shaft and key failures.

Innovative Design Features

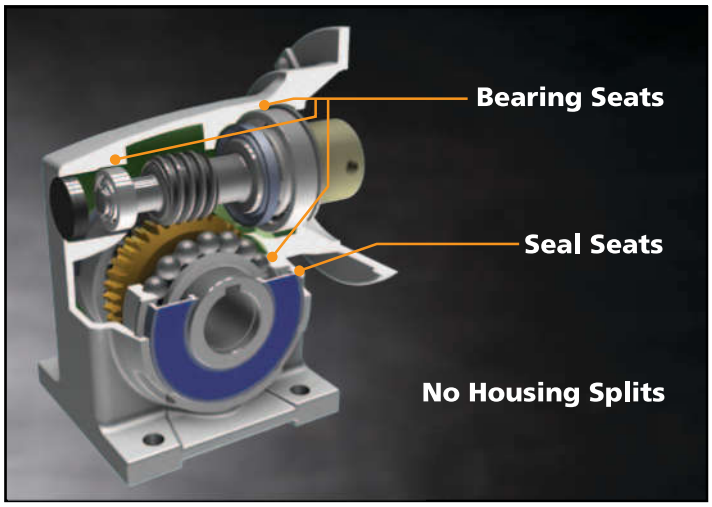

UNICASE® One Piece Housing

NORD heavy-duty, one-piece housings are precisely machined to exacting standards. Internal reinforcements further increase strength and rigidity. All bearings and seal seats are contained within the casting, eliminating splits or bolt-on carriers that can weaken the housing and allow oil leakage. Bores and mounting faces are machined in one step, producing extremely precise tolerances — thus ensuring accurate positioning of gear teeth, bearings and seals, and longer life for all components.

- Increased torsional strength and rigidity.
- Eliminates housing splits and bolt-on carriers.
- Leak-free housing design.
- Versatile mounting options and accessory kits.

Modular Construction

- Easy-to-configure input and output accessories.
- Integral motor or motorized c-face units.
- NEMA, IEC or solid shaft input options.
- Footed, flanged or shaft-mount.
- 10:1 helical pre-stage & compound assemblies.
- Keyed hollow bore, solid shaft, and bushing-kit options.

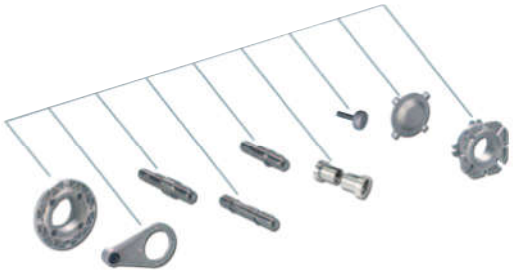



Factory Oil Filled

NORD factory-filled gear units allow for easy commissioning of the gear unit and prevent damage caused by dry start-ups. Each unit is filled with a quality gear lubricant that is recognized by the industry.

- Maintence free / lubricated-for-life.
- High-quality long-life synthetic lubricant.
- USDA H1 lubrication readily available.
- Optional venting capabilities.

nsd tupH Sealed Surface Conversion

The NEW NSD^{tuph} Sealed Surface Conversion System offers a cost effective weight saving alternative to stainless steel reducers. Through a revolutionary process the reducer housing and its components are electrically catalyzed resulting in a surface conversion at the molecular level. NSD^{tuph} provides exceptional chemical, corrosion and abrasion resistance. The converted surface also becomes extremely scratch resistant as it becomes 6-7 times harder than the original aluminum alloy.



The NSD^{tuph} package includes stainless steel reducer hardware and c-face gasket for the motor. Options include stainless steel reducer shafting, smooth-bodied stainless steel c-face motors, and food grade lubricants. NSD^{tuph} is the ideal package for many harsh environments involving chemicals or wash-downs and areas where sanitation and cleanliness are the highest priority.

Available FLEXBLOC™ / MINICASE® worm Units with NSD^{tupH} Conversion

	SK1SI31 / SK1SMI31	SK1SI40 / SK1SMI40	SK1SI50 / SK1SMI50	SK1SI63 / SK1SMI63
N48C Input	X			
N56C Input		X	X	X
N140TC Input		X	X	X

nsd tupH System Package

- Standard electrically catalized reducer housing and accessories
- Standard stainless steel hardware
- Standard C-Face gasket included
- Housings surfaces are self draining
- Food grade H1 synthetic lubrication (optional)
- Stainless steel output shafting (optional)
- Stainless steel C-Face inverter duty motor up to 10HP (optional)
- 3 Year warranty when supplied with synthetic lube





nsd tupH is Useful in Many Harsh Environments

(not limited to but including)

- Chemical wash down
- Damp and wet environments
- Marine / Coastal
- Food & Beverage industry
- Car Wash
- Dairy
- Pharmaceutical
- Water and waste treatment

Some of the Many Benefits of nsd tupH

- Cost effective alternate to stainless steel
- Corrosion resistance
- Chip resistance
- Non propagating from scratches or other blemishes
- Highly Cleanable low friction surface
- Non-porous
- Lighter than stainless
- Chemical resistant
- Elimination of galvanic corrosion
- Surface conversion is 1000X harder than paint

FLEXBLOC™ & MINICASE®
Flexible Solutions & Bolt-On Modules



NEMA C-FACE COUPLING ADAPTER
For attaching standard motors

Kit contains:
- Adapter flange
- Coupling
- Nuts and bolts

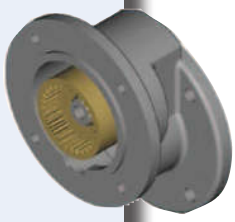

2ND REDUCTION
Helical 10:1 gear set
Fits all size gearboxes
Lifetime synthetic lubricant
Sealed unit

Kit contains:
- Pre-assembled unit
- Bolts

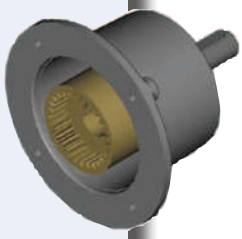

SOLID INPUT SHAFT
Fits all size gearboxes
Lifetime lubricant
Sealed unit

Kit contains:
- Pre-assembled unit
- Bolts

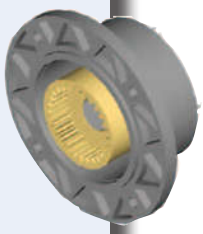

DOUBLE WORM ADAPTER
Mounts the SK1SI/SMI31 to the input of the larger SK1SI/SMI40 - SK1SI/SMI75 to produce a high reduction double worm gear unit

Kit contains:
- Adapter flange
- Coupling
- Shaft
- Keys
- Bolts

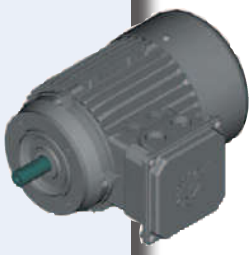

NORD C-FACE MOTORS & BRAKEMOTORS
3 phase, 230/460, 60 Hertz
3 phase, 575V, 60 Hertz

Options:
- Power off brake
- Numerous brake options
- Thermistor temperature sensors
- Thermostat temperature sensors
- Blower fan
- Encoders
- Space heater
- Canopy drip covers
- Encapsulated windings
- End bell drain holes

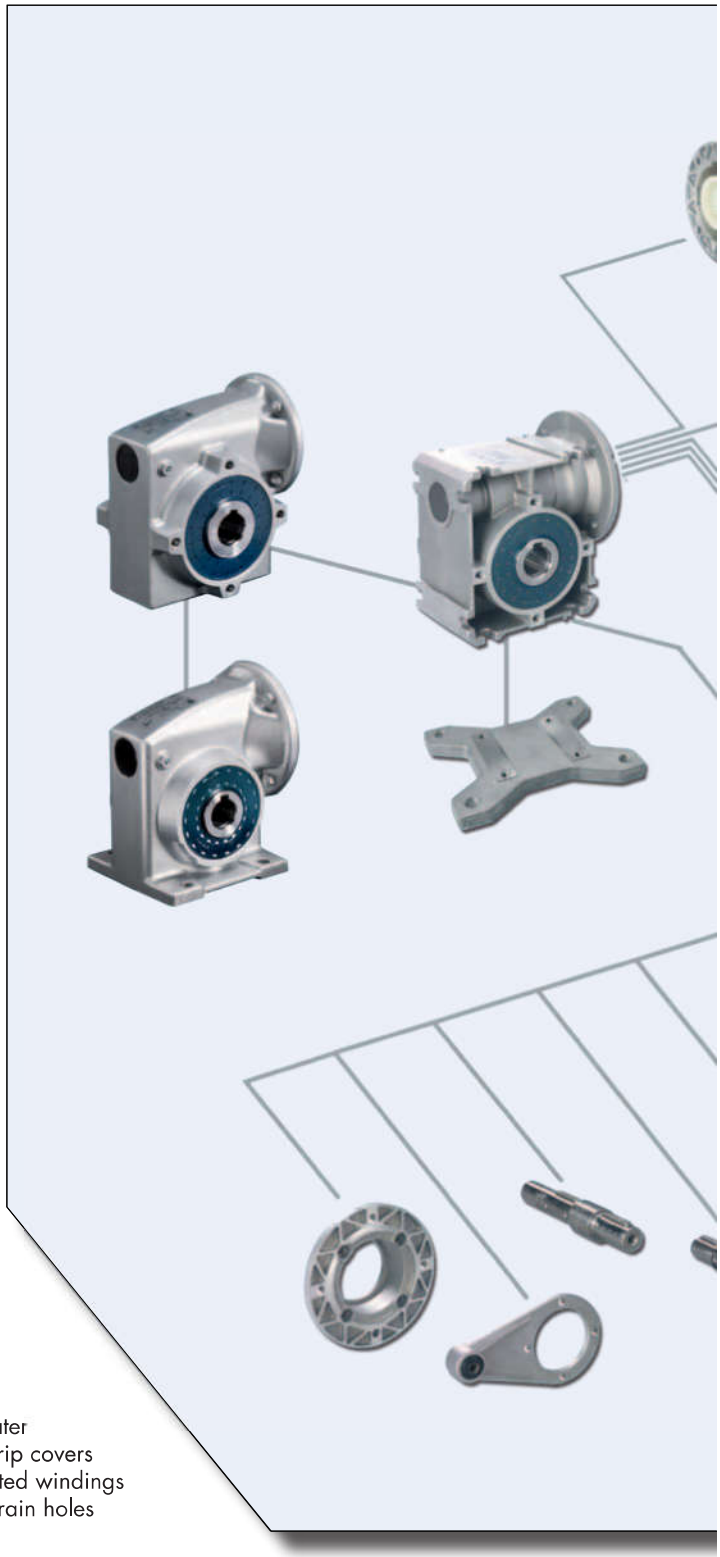

DRIVESYSTEMS

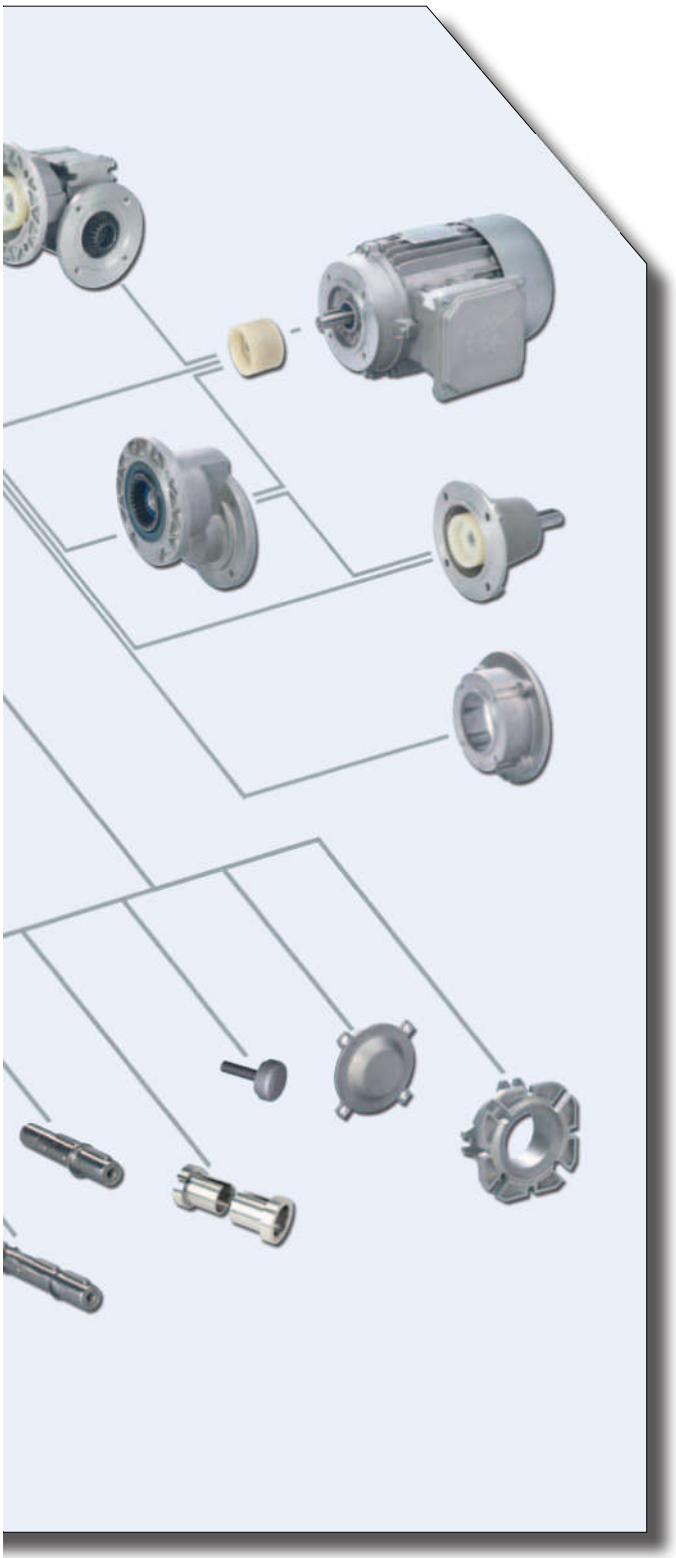

SOLID OUTPUT SHAFT
Inch dimensions with standard keys
Plug into standard hollow shaft
Install on either side

Kit contains:
- Shaft
- Keys
- External snap ring

Options:
- Double solid shaft

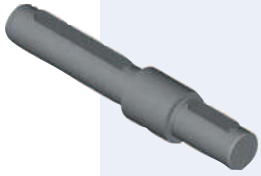

B5 OUTPUT FLANGE
Multiple flanges available for each size gearbox. Flange pilots are centered in seal bore.

Kit contains:
- Die cast flange
- Bolts



SHAFT PROTECTION COVER
Seals shaft end Safety protection from rotating shafts.

Kit contains:
- Cover
- Bolts



FOOT PLATE
Mounts to the bottom of the FLEXBLOC™ to provide drop-in compatibility with many worm gear reducers.

Kit contains:
- Foot plate
- Bolts



TORQUE REACTION ARM
For shaft mounting
Rubber shock absorber installed in attachment end.

Kit contains:
- Torque arm
- Bolts



SHAFT BUSHING
Hollow shaft bushing for increased bore flexibility.

Kit contains:
- Bushings with set screw
- Key



FIXING KIT
Optional mounting device that engages the customer solid shaft tap and draws the end of the shaft into contact with the hollow bore snap ring.

Kit contains:
- Carbon Steel retaining washer and bolt
- Spring loaded steel snap ring
- Plastic cover



Gearbox Ratings

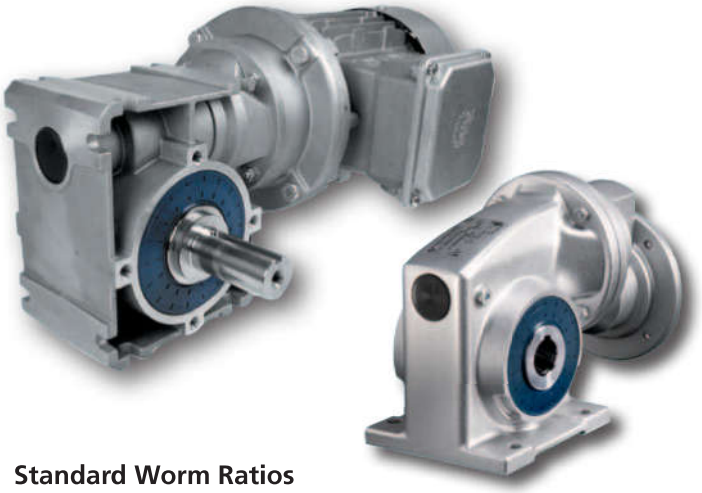

Standard Worm Ratios

- 5:1 - 100:1 single worm ratios.
- Up to 1000:1 with a 10:1 helical pre-stage option.
- Compound Unit ratios up to 10,000:1

Type	Ratio	Output RPM	Torque [lb-in]	Max Input HP
SK 1SI 31	5	350	204	1.30
	7.5	233	239	1.06
	10	175	230	0.80
SK 1SMI 31	12.5	140	212	0.61
	15	117	257	0.66
	20	88	239	0.49
	25	70	221	0.38
	30	58	266	0.44
	40	43	248	0.34
	50	35	230	0.27
	60	29	212	0.23
	80	22	195	0.18
	100	18	186	0.17

Type	Ratio	Output RPM	Torque [lb-in]	Max Input HP
SK 1SI 40	5	350	336	2.10
	7.5	233	389	1.69
	10	175	372	1.24
SK 1SMI 40	12.5	140	363	1.00
	15	117	434	1.06
	20	88	398	0.77
	25	70	372	0.60
	30	58	442	0.67
	40	43	407	0.51
	50	35	381	0.41
	60	29	354	0.34
	80	22	327	0.27
	100	18	301	0.23
SK 1SI 40/H10 SK 1SMI 40/H10	50	35	549	0.38
	thru			
	1000	1.8	487	0.06
SK 1SI 40/31 SK 1SMI 40/31	150	12	655	0.30
	thru			
	3000	0.6	876	0.06

Type	Ratio	Output RPM	Torque [lb-in]	Max Input HP
SK 1SI 50 SK 1SMI 50	5	350	584	3.56
	7.5	233	690	2.90
	10	175	664	2.14
	12.5	140	637	1.69
	15	117	770	1.79
	20	88	717	1.30
	25	70	673	1.01
	30	58	796	1.11
	40	43	735	0.83
	50	35	681	0.65
	60	29	646	0.55
	80	22	593	0.43
	100	18	549	0.36
SK 1SI 50/H10 SK 1SMI 50/H10	50	35	742	0.50
	thru			
	1000	1.8	894	0.09
SK 1SI 50/31 SK 1SMI 50/31	150	12	1177	0.49
	thru			
	3000	0.6	1575	0.11

Type	Ratio	Output RPM	Torque [lb-in]	Max Input HP
SK 1SI 63 SK 1SMI 63	5	350	1044	6.30
	7.5	233	1230	5.05
	10	175	1186	3.74
	12.5	140	1142	2.91
	15	117	1372	3.07
	20	88	1274	2.22
	25	70	1195	1.72
	30	58	1416	1.86
	40	43	1301	1.38
	50	35	1212	1.09
	60	29	1150	0.90
	80	22	1044	0.69
	100	18	974	0.57
SK 1SI 63/H10 SK 1SMI 63/H10	50	35	751	0.50
	thru			
	1000	1.8	1584	0.16
SK 1SI 63/31 SK 1SMI 63/31	150	12	2097	0.83
	thru			
	3000	0.6	2797	0.20

Type	Ratio	Output RPM	Torque [lb-in]	Max Input HP
SK 1SI 75	5	350	1735	10.36
	7.5	233	2071	8.41
	10	175	2009	6.2
SK 1SMI 75	12.5	140	1912	4.77
	15	117	2336	5.1
	20	88	2168	3.65
	25	70	2036	2.79
	30	58	1929	2.25
	40	43	2212	2.21
	50	35	2062	1.71
	60	29	1956	1.41
	80	22	1779	1.05
	100	18	1655	0.88
SK 1SI 75/40	150	12	2832	0.96
	thru			
	3000	0.60	3779	0.19

FLEXBLOC™ Worm Dimensions

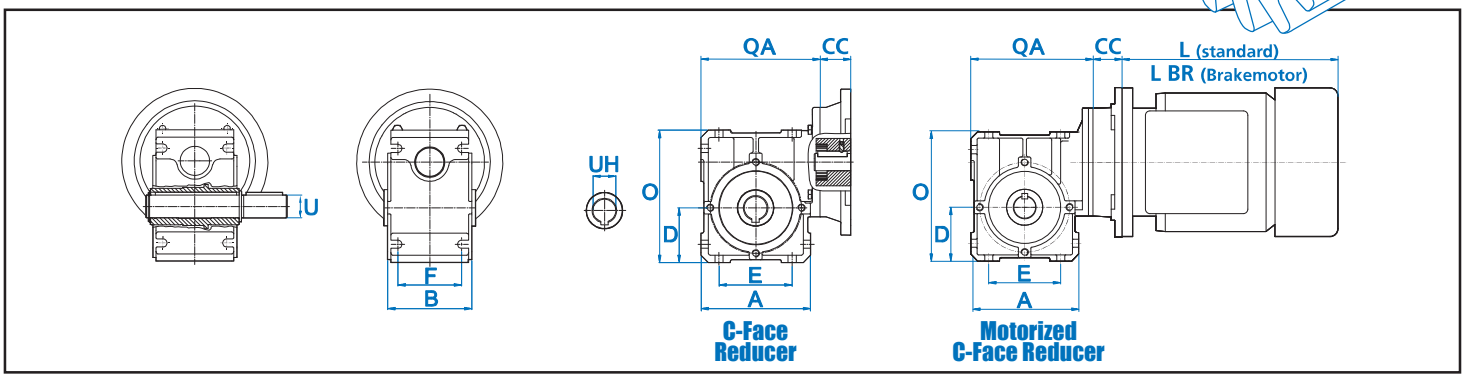

DIMENSIONS

	A	B	D	E	F	O	QA	U	UH
SK 1SI 31	3.15	2.48	1.57	2.13	1.73	3.82	3.82	0.625	0.625
SK 1SI 40	3.94	3.07	1.97	2.76	2.36	4.78	4.69	0.750	1.000
SK 1SI 50	4.72	3.62	2.36	3.15	2.76	5.67	5.16	1.000	1.125
SK 1SI 63	5.67	4.41	2.83	3.94	3.35	6.85	6.22	1.125	1.4375
SK 1SI 75	6.77	5.12	3.39	4.72	3.54	8.08	7.87	1.375	1.9375

Metric Shaft available

NEMA C-FACE DIMENSIONS

	48C		56C		140TC		180TC	
	Available	CC	Available	CC	Available	CC	Available	CC
SK 1SI 31	X	1.50	X	1.89	-	-	-	-
SK 1SI 40	-	-	X	1.46	X	1.93	-	-
SK 1SI 50	-	-	X	1.46	X	1.93	-	-
SK 1SI 63	-	-	X	1.46	X	1.93	X	3.06
SK 1SI 75	-	-	X	1.61	X	1.61	X	2.16

NEMA C-FACE GEARMOTOR DIMENSIONS

	56C-63S/L		56C-71S/L		56C-80S/L-LH-LP		140TC-80L-LH-LP		140TC-90LH-LP		180TC-100LH-LP		180TC-112MH-MP	
	L	L BR	L	L BR	L	L BR	L	L BR	L	L BR	L	L BR	L	L BR
SK 1SI 31	7.57	9.78	8.44	10.72	9.46	11.98	9.46	11.98	-	-	-	-	-	-
SK 1SI 40	7.57	9.78	8.44	10.72	9.46	11.98	9.46	11.98	11.00	13.95	-	-	-	-
SK 1SI 50	7.57	9.78	8.44	10.72	9.46	11.98	9.46	11.98	11.00	13.95	-	-	-	-
SK 1SI 63	7.57	9.78	8.44	10.72	9.46	11.98	9.46	11.98	11.00	13.95	11.97	15.57	-	-
SK 1SI 75	-	-	8.44	10.72	9.46	11.98	9.46	11.98	11.00	13.95	11.97	15.57	13.56	17.26

NORD GEAR LIMITED
Member of the NORD DRIVESYSTEMS Group

Item	Description	Material	Qty	Total
100	**SK1SI50/H10-N56C**			

Product Name	Worm Gearbox with NEMA Adapter
Nominal Motor Speed	1,750
Ratio	150.00
Assumed Output Speed	12.000 1/min
Service Factor	1.10
Nominal Output Torque (lb-in)	1,196.00
Max. Torque Capacity (lb-in)	1,257.00
Maximum Motor Power (kW)	0.250
Maximum Motor Power (HP)	0.335
Gearbox Mounting Position	M1
Helical Input Stage Mounting P	Input Stage T1
Housing Type	Foot
Input Adapter	N56C
Output Shaft Dimensions	25H7
Breather	Autovent
Lubricant Type	VG680-SYN-PG
Lubricant Supplier	Klüber
Lubricant	KLUBERSYNTH GH 6-680
Quantity Lubricant(l)	0.095
Paint Option Old	Without paint
Paint Option	Without painting
Separate part	Coupling half + sprocket
Weight	approx. 7 KG /PC

Intelligent Drivesystems, Worldwide Services



B1000

Operating & Instruction Manuals For Gear Units

NORD®
DRIVESYSTEMS

NORD DRIVESYSTEMS Group



NORD Delivers

NORD offers full-featured drive solutions that can tackle the toughest requirements. All components are carefully selected and precisely configured to meet your exact specifications. In the rare case that standard components won't meet your needs, our in-house engineering team will work with you to design custom components or a complete customized system.





Reduce Lead Times and Decrease Inventory

- 25% of orders ship same day or next day with NO expedite fees
- 47% of orders ship within 5 working days
- 81% of orders ship in 2-3 weeks





Global Product Designs, Standards, and Support

- Innovative product range (one-stop shop)
- Global connected presence
- Mechanical and electrical application engineers ready to assist you
- Online resources





Increase Efficiency and Reduce Operation Costs

- First-class customer service and support, plus myNORD online tools
- Product flexibility through standard components and customizations
- Program personalization, such as weekly shipment schedules and custom nameplates
- Partner with a company that is easy to do business with and wants to see you succeed!





TABLE OF CONTENTS

TITLE	Document Number & Hyperlink
General Instructions	U10000
Safety Notes	U10020
Storage & Commissioning	U10040
Unit Installation	U10060
Solid Shaft Connections	U10250
Keyed Hollow Shaft	U10270
Shaft Fixing Kit	U10280
Hollow Shaft With Shrink Disc	U10290
NORD GRIPMAXX™	U10310
Reducer Mounting Footed & Flange Mount Gear Units	U10500
Clincher™ Shaft-Mount With Rubber Buffers	U10580
Right Angle Shaft-Mount with Torque Arm (D)	U10600
90.1 Helical-bevel shaft-mount with Bottom Mount Torque Arm (K)	U10620
Helical & Bevel Reducer Lubrication	U10750
Conveyor Drive Reducer lubrication	U10751
Conveyor Drive Extended Bearing lubrication	U10752
VL2 & VL3 Extended Bearing Lubrication	U10760
Helical Worm Reducer Lubrication	U10770
Minicase™ (SM) Worm Reducer Lubrication	U10790
Minicase™ (SMI/SMID) Worm Reducer Lubrication	U10800
FLEXBLOC™ Worm Reducer Lubrication	U10810
Expansion Chambers Installation & Maintenance Manual	U10830
Helical & Bevel Reducer Lubrication Types	U11000
Conveyor Drive Lubrication Information	U11001
Helical Worm Reducer Lubrication Types	U11020
Minicase™ (SM) Worm Reducer Lubrication Types	U11040
Minicase™ (SMI/SMID) Worm Reducer Lubrication Types	U11050
FLEXBLOC™ Worm Reducer Lubrication Types	U11060
Standard In-Line Footed Oil Fill Quantities	U11500
Standard In-Line Flanged Oil Fill Quantities	U11600
Helical In-Line Footed Oil Fill Quantities	U11700
Helical In-Line Flanged Oil Fill Quantities	U11800
CLINCHER™ Oil Fill Quantities	U11900
90.1 Helical-Bevel Footed Oil Fill Quantities	U12000
90.1 Helical-Bevel Flanged Oil Fill Quantities	U12100
92 Series Helical-Bevel Footed Oil Fill Quantities	U12200
92.1/93.1 Series Helical Bevel Oil Fill Quantities	U12205
92 Series Helical-Bevel Flanged Oil Fill Quantities	U12300
Helical-Worm Footed Oil Fill Quantities	U12400
Helical-Worm Solid Shaft/Flanged Oil Fill Quantities	U12500
Helical-Worm Hollow Shaft Oil Fill Quantities	U12600

TABLE OF CONTENTS

TITLE	Document Number & Hyperlink
Nordbloc Footed Oil Fill Quantities	U12700
Nordbloc Flanged Oil Fill Quantities	U12800
Nordbloc.1 Footed Oil Fill Quantities	U12900
Nordbloc.1 Flanged Oil Fill Quantities	U13000
Minicase™ (SM) Footed Oil Fill Quantities	U13100
Minicase™ (SMI) Footed Oil Fill Quantities	U13150
Minicase™ Flanged (SM) Oil Fill Quantities	U13200
Minicase™ Flanged (SMI) Oil Fill Quantities	U13250
FLEXBLOC™ Oil Fill Quantities	U13300
Standard In-Line Oil Plug & Vent Locations	U14000
Helical In-Line Oil Plug & Vent Locations	U14100
CLINCHER™ Oil Plug & Vent Locations	U14200
92 Series Helical-Bevel Oil Plug & Vent Locations	U14300
92.1/93.1 Series Helical-Bevel Oil Plug & Vent Locations	U14305
90.1 Helical-Bevel Oil Plug & Vent Locations	U14400
Conveyor Drive Oil Plug & Vent Locations	U14401
Helical-Worm Oil Plug & Vent Locations	U14500
Nordbloc Oil Plug & Vent Locations	U14600
Nordbloc.1 Oil Plug & Vent Locations	U14700
Minicase™ (SMI) Worm Oil Plug & Vent Locations	U14750
FLEXBLOC™ Vent Locations	U14800
Troubleshooting	U19000
Titan Adjustable Speed Drives	U21005
Nordisc Adjustable Speed Drives	U21010
Motors - AC Induction, Single and Polyphase	U30000
Motor Brakes Installation & Maintenance	U35000
Fast Acting Brake Rectifiers [GPE, GPU & PMG]	U35100
Current sensing relay	U35200
NEMA/IEC/SERVO Inputs Adapters & Their Couplings	U45100
NEMA or IEC Input Adapter Lubrication Options	U45250
NEMA or IEC Input Adapter with Grease Fitting	U45255
Solid Input Shaft [W]	U45300
Motor Mount Platform [MK]	U45400
Sugar Scoop	U45500
NSD tuph Touch-Up Kit	U65100
Terms & Conditions of Sale	Terms

1. Importance of the operating instructions

These operating instructions are intended to provide general information and safety guidelines. It is the responsibility of the buyer, machine builder, installer and user of the NORD product to make sure that all the proper safetynotes and operating instructions have been reviewed and understood. If the contents of this instruction or any applicable operating instructions are not understood, please consult NORD.

> ⚠ ***WARNING***
>
> Electric motors, gearmotors, electrical brakes, variable frequency drives, and gear reducers contain potentially dangerous high-voltage, rotating-components and surfaces that may become hot during operation. All work involved in the transport, connection, commissioning and maintenance of any NORD product must be carried out by qualified and responsible technicians.

2. Inspect incoming freight

Before accepting shipment from the freight company, thoroughly inspect the NORD equipment for any shipping and handling damage. If any goods called for in the bill of lading or express receipt are damaged, or if the quantity is short, do not accept until the freight express agent makes an appropriate notation on your freight bill or express receipt. If any concealed loss or damage is discovered later, notify your freight carrier or express agent at once, and request a formal review of your claim.

Claims for loss or damage in shipment must not be deducted from the NORD invoice, nor should payment of the NORD invoice be withheld awaiting adjustment of such claims, as the carrier guarantees safe delivery. NORD will try to assist in collecting claims for loss or damage during shipment; however, this willingness on our part does not remove the transportation company's responsibility in reimbursing you for collection of claims or replacement of material.

3. Obtaining order specific user manuals and spare parts lists

One can receive the detailed installation and maintenance instructions by entering a serial number (or NORD order number) at the appropriate location on the NORD web site.

i. Record the serial number from your gearmotor, gear reducer, or motor nameplate, or record the serial number found on your order confirmation.

ii. Go to **https://shop.nord.com/US-en/mynord/documentcenter** to download the appropriate operating instructions.

iii. Obtain order-specific parts lists and place orders online via the Parts shop at https://shop.nord.com/US-en/home

EXAMPLE: https://shop.nord.com/US-en/mynord/documentcenter

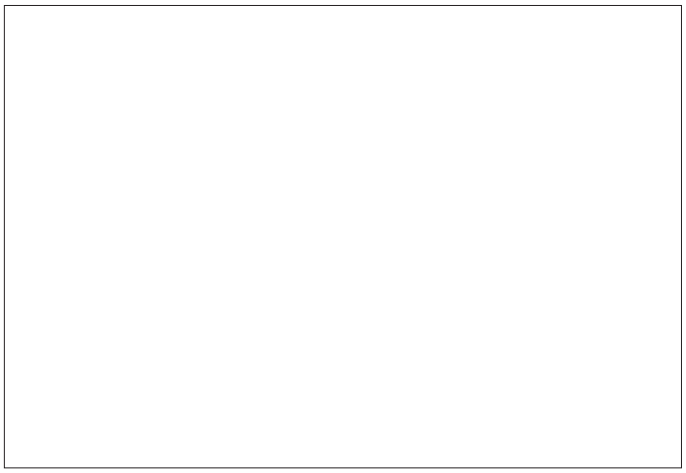

4. Intended use

NORD is a supplier of electric motors, gearmotors, reducers, electromechanical brakes, mechanical variators, and electrical variable frequency drives that are intended for commercial installations on larger systems and machines.

> ⚠ ***WARNING***
>
> NORD does not accept any liability for damage or injury caused by:
>
> - Inappropriate use, operation or adaptation of the drive system.
> - Unauthorized removal of housing covers, safety and inspection covers, guarding, etc.
> - Unauthorized modifications to the drive system.
> - Improper servicing or repair work on the drive system.
> - Damage caused during shipment or transportation.
> - Disregard of the important Safety Notes or Operating Instructions.

5. Notes concerning warranty and liability

All units are supplied according to the terms described in our standard "Conditions of Sale." The unit limited warranty is also defined in our "Conditions of Sale" and is located in the back of our product catalogs as well as the back of your order invoice.

All NORD Safety Notes and all related NORD Operating instructions shall be considered up-to-date at the time in which they were compiled by the buyer, machine builder, installer or user. NORD reserves the right to incorporate technical modifications and information updates to any safety/operating instructions that are within the scope of providing additional knowledge or clarification, communicating design changes, or product enhancements. Information updates may include any NORD product, or subsequent products purchased and supplied by NORD; No specific claims can be derived from the information or illustrations and descriptions contained in the safety notes or related operating instructions.

⚠ *WARNING*

NORD assumes no liability for personal injury, equipment damage or malfunctions resulting from failure to comply with any installation safety notes. The applicable national, regional, and local work regulations and safety requirements must also be complied with. Failure to comply with any safety notes or regulations may result in serious injury, damage to property, or even death.

6. Checklist for installation and operation

- ☑ Verify that the purchased NORD product has been supplied with the expected accessories & options. Check the received goods and packing slip to make sure items are properly received.
- ☑ Make sure that you have all of the required Operating Instructions for your NORD electric motor, gearmotor, reducer, electromechanical brake, mechanical variable speed drives, or electrical variable frequency drives.
- ☑ Consult NORD if you feel you are missing any documentation or if you have questions.

1. Safety & information symbols

All work including transportation, storage, installation, electrical connection, commissioning, servicing, maintenance and repair must be performed **only by qualified specialists or personnel**. It is recommended that repairs to NORD Products are carried out by the NORD Service Department. Instructions related to operational safety will be emphasized as shown.

Symbol	Meaning
⚠	**Danger, Caution or Warning -** Severe risk or danger of personal injury or death by working around dangerously high electrical voltage or moving machinery. Proper safety precautions must be taken.
NOTICE	**Notice -** Care must be taken to avoid the possibility of damaging the drive unit, driven machine, or the environment.
ℹ	**Important Note -** Useful note or tip to help assure trouble-free operation.
♻	**Material Disposal Note -** Important note concerning suggested material disposal.

2. Safety warnings

⚠ DANGER

- All work involved in the transport, connection, commissioning and maintenance of any NORD product must be carried out by qualified and responsible technicians. All applicable national, regional, and local work regulations and safety requirements must also be complied with. **NORD assumes no liability for personal injury, accidental death, or equipment damage and malfunctions resulting from failure to comply with installation or operating instructions, safety notes, or any work regulations and laws!**
- Gear unit installation and maintenance work may only be performed when no power is available to the prime mover or motor. Electric motors, electrical brakes, and variable frequency drives, contain potentially dangerous high-voltage. Prior to installation or maintenance, shut down the power at the circuit breaker or power switch. **While working on the drive, make sure the power from the prime mover is isolated or secured on "lock-out" to prevent accidental start-up and to safeguard against injury!**
- Surfaces of motors and gear units may become hot during operation or shortly after start-up. In some instances additional protection against accidental contact may be necessary. **Use caution to avoid burns or serious injury!**

3. Observe published performance range & nameplate data

NOTICE

Observe the data on all reducer nameplates and verify published ratings for the NORD item/s in question. Do not operate any NORD equipment outside the published performance range. Failure to comply may result in damage to the drive unit, driven machine, or the environment.

U.S. Nameplate

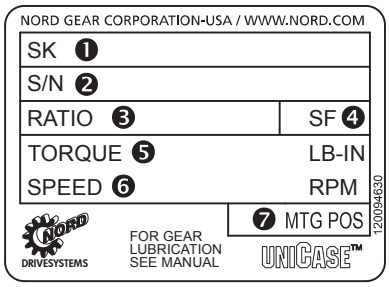

❶ Model/Type
❷ Serial Number
❸ Gear Ratio
❹ Service Factor
❺ Torque Rating
❻ Output Speed RPM
❼ Mounting Position

European Nameplate

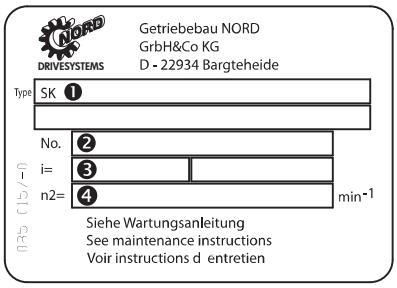

❶ Model/Type
❷ Serial Number
❸ Gear Ratio
❹ Speed

4. Transportation and handling

Make sure that all eyebolts and lifting lugs are tight and lift only at designed points. Protect the mounting surface from possible damage during transportation.

⚠ WARNING

Do not attach other machinery or loads to the NORD assembly, the supplied lifting bolts are not designed for this purpose and may result in drive damage or personal injury.

If the gearmotor or assembly is equipped with two suspension eye bolts, then both locations should be used for transportation and placement of the unit; in this case the tension force of the slings must not exceed a 45° angle.

In some instances it may be appropriate to use additional lifting straps or slings in order to assure safe transportation of the assembly. Always use sufficiently rated handling equipment and ensure that adequate safety measures are taken to protect personnel from injury during transportation. Once the NORD assembly is properly installed, remove the transportation fixtures.

5. DISPOSAL

MATERIAL DISPOSAL

Properly dispose of all used gear units and internal parts in accordance with all local regulations. In particular, all lubricants must be properly collected and disposed.

For confirmation of specific materials used in a specific reducer or gearmotor assembly, please consult NORD with the appropriate unit identification or serial number.

Components	Material
Gear wheels, shafts, rolling bearings, parallel keys, snap rings, spacers, shims, etc.	Steel
Gear housing and housing components	Cast iron or Aluminum (depending on type and size)
Worm gears	Bronze alloy
Radial seals, sealing caps, and rubber components	Elastomers with some steel
Coupling components	Plastic or Elastomer with Steel
Housing gaskets and flat oil seals	Asbestos-free sealing or gasket material (various types used)
Gear Oil	Mineral, SHC-Synthetic or PG-Synthetic (can vary)

1. Storage

IMPORTANT NOTE

For storage periods longer than 9 months, or for storage in less than desirable conditions, please consult NORD for recommendations.

Storage for up to 9 months is possible, so long as the following conditions are observed:

- Store the gear unit in its actual mounting position in accordance with the specified oil fill-level, in a clean and dry temperature controlled area. Avoid temperature fluctuations within the range of 0°C and 40°C (32°F to 104°F) and avoid relative humidity conditions in excess of 60%.
- Protect all exposed or unpainted shaft and flange surfaces with an anti-corrosion agent or grease.
- Store in a location free from shock and vibration, to avoid false brinelling of bearing elements and raceways.
- Whenever possible, rotate the shafts periodically, by hand if necessary, to help prevent brinelling (bearing damage) and to help keep the shaft seals pliable.
- Avoid direct exposure to the sun or UV light and aggressive or corrosive materials in the environment (ozone, gases, solvents, acids, caustic solutions, salts, radioactivity, etc.

2. Commissioning

Prior to gear unit start-up, complete the following:

- Please check your gear unit for a vent and if applicable to your product, remove the sealing plug to activate.

NOTICE

To prevent build-up of excessive pressure, sealed vents must be activated as shown prior to gear unit start up. Excessive pressure may cause damage to internal gearbox components and leakage.

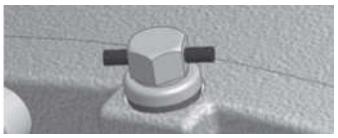

Sealed vent

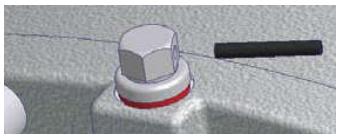

Activated vent

- Check the lubricant and be sure the gear unit is filled with the proper oil type, to the proper level, as determined by the mounting position.

IMPORTANT NOTE

Some smaller gear units are supplied as maintenance free/ lubricated for life gear units. Oil level may not be checked on some of these units.

- Check the condition of all shaft seals and all assembled flange gasket areas. If any change is detected in the shape, color, hardness or permeability, or if any leaks are detected, the corresponding shaft seals and/or gaskets must be replaced.
- Remove all anti-corrosive metal protectant from otherwise bare metal surfaces. Follow product manufacturers directions and warnings during surface protection removal.
- Check the resistance of all motor and brake windings to verify the integrity of the winding insulation and inspect all terminal box openings and wire connection areas to verify that all components are dry and free of corrosion.

3. Long-Term Storage

By taking special precautions, problems such as seal leakage and reducer failure due to the lack of lubrication, improper lubrication quantity, or contamination can be avoided. The following precautions will protect gear reducers during periods of extended storage:

- Store the gear unit in its actual mounting position in accordance with the specified oil fill-level, in a clean and dry temperature controlled area. Avoid temperature fluctuations within the range of 0°C and 40°C (32°F to 104°F) and avoid relative humidity conditions in excess of 60%.
- Fill the reducer full with oil that is compatible with the product normally used or recommended during service.
- Apply grease to all unpainted or unprotected shafts, bores, keyways, flange surfaces, tapped holes, and to the exterior of all oil seals.
- Store in a location free from shock and vibration, to avoid false brinelling of bearing elements and raceways.
- Once every few months rotate the input shaft approximately 10-20 revolutions to redistribute the weight of gears and shafts and to prevent brinnelling of the bearings and drying of the seal track.
- Avoid direct exposure to the sun or UV light and aggressive or corrosive materials in the environment (ozone, gases, solvents, acids, caustic solutions, salts, radioactivity, etc.)

4. Commissioning After Long-Term Storage

• Please check your gear unit for a vent and if applicable to your product, remove the sealing plug to activate.

NOTICE

To prevent build-up of excessive pressure, sealed vents must be activated as shown prior to gear unit start up. Excessive pressure may cause damage to internal gearbox components and leakage.

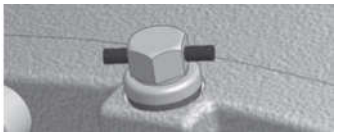

Sealed vent

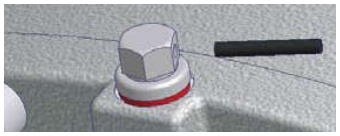

Activated vent

- Remove all anti-corrosive metal protectant from otherwise bare metal surfaces. Follow product manufacturers directions and warnings during surface protection removal.
- Drain the reducer and refill it with the proper type and amount of lubricant.
- Observe start-up and initial operation to make sure there are no seal or gasket leaks, or unusual sounds, vibration or heat rise during operation.
- Check the resistance of all motor and brake windings to verify the integrity of the winding insulation and inspect all terminal box openings and wire connection areas to verify that all components are dry and free of corrosion.

1. Installation site

Drives must be properly installed if they are to produce the rated torque. Improper installation may lead to oil leaks, reduced life, or even catastrophic failure. NORD gear drives and motors are intended to be installed at a suitable mounting site under the following conditions:

- Unimpeded airflow to and around the units.
- Accessibility to oil drain, level and breather plugs.
- On brakemotors, allow adequate space for removing the fan guard and replacing and adjusting the brake.
- Mounting surfaces must be flat, torsionally rigid, and dampened against vibration.
- Unless special measures are taken, the immediate vicinity around the gear drive or motor should not be exposed to any aggressive or corrosive substances, contaminated air, ozone, gases, solvents, acids, alkalis, salts, radioactivity, etc.

2. Mounting position

Reducer mounting position charts illustrate the standard mounting positions for horizontal and vertical mounting. All gear units are assembled with the oil fill-level, oil-drain and vent plugs installed in their proper locations, **according to the customer-specified mounting position**. For mounting orientations other than shown consult NORD Gear.

NOTICE

Improper oil levels may lead to premature component wear and diminished service life. The gear reducer may not receive proper lubrication if the unit is not mounted in the position for which it is designed. Observe the mounting position designated on the reducer nameplate, or specified in the order acknowledgement. Consult NORD prior to changing mounting position in the field. While it is often possible to simply relocate the oil fill-level and vent locations, and adjust the oil fill amount, in some cases, different mounting positions may lend themselves to different internal construction features.

3. Reducer mounting

- The support foundation must be straight, level and flat. Whether the gear unit is foot-mounted or flange-mounted, NORD recommends that the straightness and flatness of the customer-supplied support foundation follow **Table 1**.
- The gear unit must be properly aligned with the driven shaft of the machine in order to prevent additional stress or load forces from being imposed upon the gear unit.
- To facilitate oil drainage it may be desirable to elevate the gear box foundation above the surrounding support structure.
- All bolting surfaces must be clean and free from contamination and corrosion.

Table 1: Recommended Straightness and Flatness of Customer-Supplied Support Foundation

Above (in)	To & Including (in)	General Tolerance on Straigtness & Flatness ISO 2768-2, Tolerance Class K
0.00	0.39	+/- 0.002 in
0.39	1.18	+/- 0.004 in
1.18	3.9	+/- 0.008 in
3.9	11.8	+/- 0.016 in
11.8	39	+/- 0.024 in
39	118	+/- 0.031 in

Above (mm)	To & Including (mm)	General Tolerance on Straigtness & Flatness ISO 2768-2, Tolerance Class K
0	10	+/- 0.05 mm
10	30	+/- 0.1 mm
30	100	+/- 0.2 mm
100	300	+/- 0.4 mm
300	1000	+/- 0.6 mm
1000	3000	+/- 0.8 mm

Straightness: Based upon the length of the corresponding line.

Flatness: Based upon the longer lateral surface or the diameter of the circular surface.

IMPORTANT NOTE

The responsibility for the design and construction of the support foundation is with the user. The foundation must be adequate to withstand normal operating loads and possible overloads while maintaining alignment to attached system components under such loads. ***Motors and drive components mounted on prefabricated base plates can become misaligned during shipment. Always check alignment after installation.***

4. Steel foundation

An engineered structural steel foundation should be designed to provide adequate rigidity and prevent loads from distorting the housing or causing misalignment of internal gears and shafts. When foot-mounting the gear reducer, a base plate or sole plate with suitable thickness (generally equal or greater than the thickness of the drive feet) should be securely bolted to steel supports and extend under the entire gear drive assembly. When flange-mounting the gear unit, the bulk head plate must be engineered to minimize buckling distortions and support the cantilevered weight of the gear unit or gear motor.

NOTICE

Do not weld on the gear unit or use the gear unit as an earth or ground connection for any welding procedure as this may cause permanent damage to the bearings and gears.

5. Concrete foundation

If a concrete foundation is used, allow the concrete to set firmly before bolting down the gear drive. Grout structural steel mounting pads and bolts of sufficient size into the concrete, to adequately distribute the load stress onto the concrete foundation.

Figure 1: Concrete Foundation

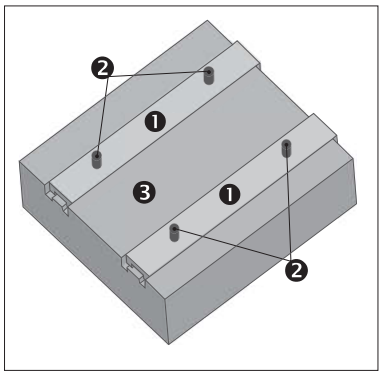

❶ Grouted Structural Steel Mounting Pads
❷ Mounting Bolts
❸ Concrete Foundation

6. Bolt connections for footed & flange mounted units

NORD footed reducers and flange-mount reducers (with B5 flange) have clearance designed into the mounting holes to allow for some minor adjustments in alignment. Bolt size, strength and quantity should be verified to insure proper torque reaction capacity whatever the mounting arrangement. Tightening torque for gear reducer mounting bolts, and recommended fastener grades, are provided in Table 2.

Table 2A: Tightening Torque for Inch Reducer Mounting Bolts

Thread Size	Grade SAE 5 / ASTM A449		Grade SAE 8	
(in)	(lb-ft)	(Nm)	(lb-ft)	(Nm)
1/4-20	7.1	9.6	10.0	13.6
5/16-18	16	21	22	30
3/8-16	28	37	39	53
1/2-13	69	93	98	132
5/8-11	138	188	195	264
3/4-10	247	334	348	472
7/8-9	396	537	558	757
1-8	592	802	833	1,130
1 1/8-7	-	-	1,233	1,672
1 1/4-7	-	-	1,717	2,327
1 3/8-6	-	-	2,267	3,073
1 1/2-6	-	-	2,983	4,045
1 3/4-5	-	-	4,458	6,045

- Calculated tightening torques are based a conventional 60°, clean and dry (un-lubricated) thread, with thread-friction and head-friction equal to 0.15.
- When using inch-fasteners, NORD recommends a minimum Grade SAE 5 (ASTM A-449) for sizes up to 1-8 UNC, and Grade SAE 8 for all larger sizes.

Table 2B: Tightening Torque for Metric Reducer Mounting Bolts

Above	ISO Grade 8.8		ISO Grade 10.9		ISO Grade 12.9	
(mm)	(lb-ft)	(Nm)	(lb-ft)	(Nm)	(lb-ft)	(Nm)
M4	2.4	3.2	3.5	4.7	4.1	5.5
M5	4.7	6.4	6.9	9.3	8.1	11
M6	8	11	12	16	14	19
M8	20	27	29	39	34	46
M10	39	53	58	78	67	91
M12	68	92	100	135	110	155
M14	107	145	159	215	180	250
M16	170	230	247	335	290	390
M18	240	325	343	465	400	540
M20	339	460	487	660	570	770
M22	465	630	664	900	770	1,050
M24	583	790	848	1,150	960	1,300
M27	848	1,150	1,217	1,650	1,440	1,950
M30	1,180	1,600	1,660	2,250	1,950	2,650
M36	2,050	2,780	2,884	3,910	3,470	4,710
M42	3,297	4,470	4,639	6,290	5,560	7,540
M48	4,940	6,700	7,010	9,500	8,260	11,200

- Calculated tightening torques are based on a conventional 60°, clean and dry (un-lubricated) thread, with thread-friction and head-friction equal to 0.15.
- When using metric-fasteners, NORD recommends a minimum ISO Grade 8.8 bolt.

7. Mounting the prime mover

When the motor is not flange mounted or integrally mounted to the gearbox, it is important to properly secure and align the gear drive with respect to the driven machine before attempting to align the prime mover or motor.

A. After the main gear drive is properly aligned and bolted in place, align the prime mover with respect to the reducer input shaft.

B. Use shims under the feet of the prime mover as needed, and secure in place with the proper mounting bolts. Dowel pins may be field-installed to help prevent misalignment and ensure proper realignment if removed for service.

IMPORTANT NOTE

When using a high speed coupling connection between the prime mover and the reducer, check alignment per the coupling manufacturers recommendations. If the coupling is misaligned, the reducer alignment or shimming is incorrect. Re-align the gear reducer and re-check the high-speed coupling alignment before re-aligning the motor.

SOLID SHAFT CONNECTIONS

1. Solid shaft diameter tolerance

Reducer input and output shaft extensions have a diameter tolerance as specified in **Table 1**.

Table 1: Solid Shaft Diameter Tolerance

Above ø (in)	To & Including ø (in)	Tolerance (in)
0.375	1.750	+0.0000 / -0.0005
1.750	7.500	+0.0000 / -0.0010

Above ø (mm)	To & Including ø (mm)	Tolerance (mm)	ISO 286-2 Fit Class
10	18	+0.012 / +0.001	k6
18	30	+0.015 / +0.002	k6
30	50	+0.018 / +0.002	k6
50	80	+0.030 / +0.011	m6
80	120	+0.035 / +0.013	m6
120	180	+0.040 / +0.015	m6
180	190	+0.046 / +0.017	m6

2. Fitting drive elements onto the reducer solid shaft

Solid input and output shaft extensions are provided with a drill and tap feature as indicated in Table 2. When installing drive elements such as coupling hubs, pulleys, sprockets, or gears, NORD recommends using the threaded hole in the end of the shaft, along with a suitable assembly device fitted into the threaded hole.

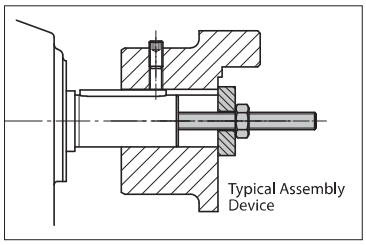

Table 2: Solid Shaft End - Threaded Holes

Above ø (in)	To & Including ø (in)	Tap Size & Depth (in)
0.375	0.500	10-24 x 0.43 in
0.500	0.875	1/4-20 x 0.59 in
0.875	0.938	5/16-18 x 0.71 in
0.938	1.100	3/8-16 x 0.87 in
1.100	1.300	1/2-13 x 1.10 in
1.300	1.875	5/8-11 x 1.42 in
1.875	3.500	3/4-10 x 1.73 in
3.500	7.500	1-8 x 2.63 in
5.125	8.875	1 1/4 - 7 x 3.15*
6.000	8.875	1 3/8 - 6 x 3.46**

Above ø (mm)	To & Including ø (mm)	Tap Size & Depth (mm)
10	13	M4 x 10 mm
13	16	M5 x 12.5 mm
16	21	M6 x 16 mm
21	24	M8 x 19 mm
24	30	M10 x 22 mm
30	38	M12 x 28 mm
38	50	M16 x 36 mm
50	85	M20 x 42 mm
85	130	M24 x 50 mm
130	225	M30 x 60 mm*
130	225	M36 x 74 mm**

* Only used on the SK9096.1 Helical-Bevel Gear Unit.

** Only used on the SK10382.1 & SK11382.1 CLINCHER™ gear units.

NOTICE

DO NOT DRIVE or **HAMMER** the coupling hub, pulley, sprocket, or gear into place. An endwise blow to the reducer shaft can generate damaging axial forces and cause damage to the reducer housing, bearings or internal components.

⚠ WARNING

To avoid serious injury the user must provide suitable safety guards for all rotating shafts and shaft components such as couplings, chain drives, belt drives, etc. All guarding must adhere to local regulations and safety standards.

3. Installing interference-fit hubs to the reducer shaft

Prior to installing any interference-fit hubs to the reducer shaft, consult with the manufacturer to determine proper assembly and fit. Interference-fits usually require heating the coupling, sprocket or gear hub, per the manufacturer's recommendations. Coupling hub installation typically follows ANSI/AGMA 9002-A86. Always make sure the reducer shaft seals are protected from the heat source. Apply uniform heat to the drive element hub to prevent distortion. NORD does not recommend heating the drive element hub beyond 212°F to 275°F (100°C to 135° C).

⚠ WARNING

When using heat to mount a drive element hub, do not use open flame in a combustible atmosphere or near flammable materials. Use suitable protection to avoid burns or serious injury.

IMPORTANT NOTE

When using external chain or belt drives, make sure the reducer is sized so that the shaft and bearings have adequate capacity. To avoid unnecessary bearing loads and additional shaft deflection, mount all power take-off devices (sprockets, pulleys, etc.) so that the applied load center is as close to the gear housing as possible and check component alignment and tension of any belts or chains per the manufacturer's recommendation. Do not over tighten the belts or chains.

4. Coupling installation

The performance and life of any coupling depends upon how well it is installed. Coupling hubs are typically mounted flush with the shaft ends, unless specifically ordered for overhung mounting. Shaft couplings should be installed according to the coupling manufacturer's recommendations for gap, angular and parallel alignment. To help obtain critical shaft alignment coupling hubs may be installed to the machine shafts prior to final shimming or tightening of the foundation bolts. Proper coupling alignment allows for thermal and mechanical shaft movement during operation and ensures that only torque (no radial load) is transmitted between the mating shafts.

Coupling gap and angular alignment

The shaft gap must be sufficient to accommodate any anticipated thermal or mechanical axial movement. When setting the coupling gap, insert a spacer or shim stock equal to the required spacing or gap between the coupling hub faces. Measure the clearance using feeler gauges at 90-degree intervals, to verify the angular alignment.

Parallel (or offset) alignment

Mount a dial indicator to one coupling hub, and rotate this hub, sweeping the outside diameter of the other hub. The parallel or offset misalignment is equal to one-half of the total indicator reading. Another method is to rest a straight edge squarely on the outside diameter of the hubs at 90° intervals and measure any gaps with feeler gauges. The maximum gap measurement is the parallel or offset misalignment.

Check alignment

After both angular and parallel alignments are within specified limits, tighten all foundation bolts securely and re-check critical alignment. If any of the specified limits for alignment are exceeded, realign the coupling.

5. Installing sheaves (pulleys), sprockets and gears

To avoid unnecessary bearing loads and additional shaft deflection, mount all power take-off devices (sprockets, pulleys, gears, etc.) so that the applied load center is as close to the gear housing as possible, as shown in **Figure 2**.

Figure 2: Sprocket or Gear Mounting

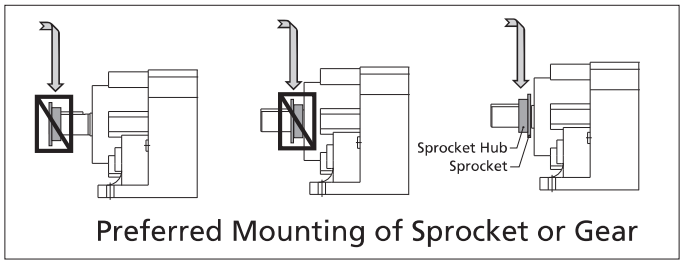

Preferred Mounting of Sprocket or Gear

Align the driver sheave or sprocket with the driven sheave or sprocket by placing a straight-edge length-wise across the face of the sheaves or sprockets. Alignment of bushed sheaves and sprockets should be checked only after bushings have been tightened. Check horizontal shaft alignment by placing one leg of a square or a level vertically against the face of the sheave or sprocket.

Always check component alignment and tension any belts or chains per the manufacturer's recommendation. The ideal belt or chain tension allows proper wrap of the driver and driven wheels, while maintaining the lowest possible tension of the belts or chain, so that no slipping occurs under load conditions. Check belt or chain tension frequently over the first 24 to 48 hours of operation.

IMPORTANT NOTE

When using external chain or belt drives, make sure the reducer is sized so that the shaft and bearings have adequate capacity. To avoid unnecessary bearing loads and additional shaft deflection, mount all power take-off devices (sprockets, pulleys, etc.) so that the applied load center is as close the gear housing as possible and check component alignment and tension of any belts or chains per the manufacturer's recommendation. Do not over tension the belts or chains.

6. Outboard pinion gear alignment

Align outboard pinion gears and adjust the gear tooth clearance according to the manufacturer's recommendations, checking for acceptable outboard pinion tooth contact. The foundation bolts may have to be loosened and the gear unit moved slightly to obtain proper gear tooth contact. After the unit is moved to correct tooth contact, the prime mover may need to be realigned.

1. Keyed hollow shaft design

NORD uses high quality carbon steel to manufacture hollow-shafts. Upon request, NORD can provide alternate materials, such as stainless steel. NORD hollow shafts are designed with a bore relief (reduced contact area) between the mating shafts.

The bore relief provides a cavity to hold an anti-seize assembly paste. It also acts as a design feature intended to help prevent corrosion and to facilitate gearbox removal from the solid shaft.

NORD furnishes dual keys designed to be used in each of the bore land areas, as opposed to supplying a single long key. The dual keys are intended to simplify assembly onto the machine's solid shaft.

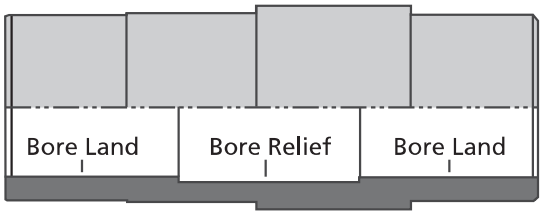

IMPORTANT NOTE

If a single shaft key or dual shaft keys are supplied by others, the key/s must engage the full bore-land length at each end of the hollow shaft.

2. Key and keyway dimensions

Unless otherwise indicated, inch keys and keyways follow the ANSI B17.1 standard and metric keys and keyways follow the DIN6885-1 standard. Inch bores will typically utilize square keys but in some instances the larger hollow shaft bore sizes utilize the alternate rectangular key shown in the ANSI B17.1 standard.

Key slots for the solid machine shaft should be made with a Class 2, transitional-fit class (slightly loose to slightly tight). Key slots in the female shaft are designed to be a low clearance fit. These suggested practices should allow for easier assembly with the mating solid shaft, without allowing excessive clearance which could cause keys to work loose during reducer operation.

IMPORTANT NOTE

If the key fit is too tight, light filing of the key sides and hand-fitting of the keys may be required.

3. Keyed hollow-shaft bore tolerances

Standard keyed hollow-shaft bore tolerances are shown in the following table.

Table 1 - Keyed hollow bore tolerances

Above ø [in]	To and Including ø [in]	Bore Diameter Tolerance ø [in]
0.4375	1.6250	+0.0010 / -0.0000
1.6250	3.2500	+0.0012 / -0.0000
3.2500	7.0000	+0.0014 / -0.0000

Above ø [mm]	To and Including ø [mm]	Bore Diameter Tolerance ø [mm]
10	18	+0.018 / -0.000
18	30	+0.021 / -0.000
30	50	+0.025 / -0.000
50	80	+0.030 / -0.000
80	120	+0.035 / -0.000
120	180	+0.040 / -0.000
180	190	+0.035 / -0.000

Metric hollow bore tolerances per ISO286-2, Class H7

4. Suggested solid shaft (machine shaft) tolerances

NORD recommends a close fit of the customer-supplied solid shaft or machine-shaft, for the following reasons:

- To help minimize the potential for fretting and corrosion.
- To help prevent excessive free play in the shaft connection that could lead to excessive load stress on the driven system, the gear drive, or both.

Table 2 - Suggested solid shaft tolerances

Above ø [in]	To and Including ø [in]	Shaft Diameter Tolerance Uniform Load ø [in]	Shock Load ø [in]
0.4375	0.8750	+0.0000 / -0.0005	+0.0000 / +0.0005
0.8750	4.5000	+0.0000 / -0.0010	+0.0000 / +0.0010
4.5000	7.0000	+0.0000 / -0.0012	+0.0000 / +0.0015

Above ø [mm]	To and Including ø [mm]	Shaft Diameter Tolerance Uniform Load ❶ ø [mm]	Shock Load ❷ ø [mm]
10	18	+0.000 / -0.011	+0.012 / +0.001
18	30	+0.000 / -0.013	+0.015 / +0.002
30	50	+0.000 / -0.016	+0.018 / +0.002
50	80	+0.000 / -0.019	+0.021 / +0.002
80	120	+0.000 / -0.022	+0.025 / +0.003
120	180	+0.000 / -0.025	+0.028 / +0.003
180	190	+0.000 / -0.029	+0.033 / +0.004

❶ **Uniform load: Mating shaft diameter tolerance per ISO286-2, class h6**

❷ **Shock load: Mating shaft diameter tolerance per ISO286-2, class k6**

As indicated in Table 2, different solid shaft tolerances are suggested depending upon the load type.

- If the machine load conditions are considered "Uniform" a clearance fit is allowed.
- If the machine load conditions are considered to have "Shock Load" a light clearance to interference fit condition is suggested.

Typically the machine builder will have good knowledge as to the load type. As an alternate method to classify load type, one could follow the "Mass Acceleration Factor Selection Method" that is discussed in NORD's product catalog/s.

Straightness, roundness, and diameter tolerance variations of both shafts should be controlled as accurately as possible. When mating, solid shaft design features are not controlled, reducer installation may be very difficult without ordering special hollow-bore design features to accomodate.

NOTICE

The supporting solid shaft or driven machine shaft must be of adequate size and strength to withstand normal operating loads and peak loads without damage to itself or any of the system components.

5. Suggested solid-shaft mating shaft surface finish

Controlling the mating shaft surface finish helps to assure proper fit and assembly while minimizing the possibility of corrosion and fretting. NORD recommends that the mating solid shaft surface should be at least 125 micro-inches (3.2 microns) or smoother.

6. Assembly to the machine shaft

A. Clean and remove any dirt, grease, or rust-preventative coatings from both the reducer hollow shaft and the machine shaft.

B. Make sure the edges of both the reducer hollow shaft and machine shaft are free from any nicks or burrs. If nicks or burrs are present remove them using an abrasive material such as an emery cloth.

C. Before installing the gear reducer onto the machine shaft, apply an anti-seize compound or anti-corrosive lubricant to the mating shafts as shown in Figure 1. Assembly and subsequent dismantling will be aided by the anti-seize agent.

Figure 1 – Application of anti-seize to the mating shafts

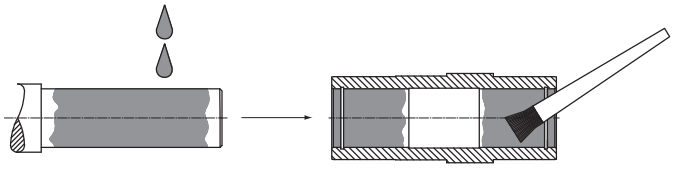

D. Fit the shaft key/s into place on the machine shaft. Depending upon the key slot design on the machine shaft, it may be necessary to stake or Loctite® the key/s into place so they do not slide axially while fitting the reducer to the shaft.

E. Lift the gear unit assembly into place and align it carefully with respect to the machine shaft.

F. Fit the gear unit assembly onto the machine shaft using a suitable pulling device.

G. Secure the reducer onto the machine shaft in an axial direction, to prevent the reducer from shifting or walking out of place during operation.

NOTICE

Do not use excessive force or try to hammer the gear unit into place. The housing, shafting, bearings or gear wheels may become damaged.

7. Securing the reducer onto the machine shaft

There are slight shaft oscillations during operation in any rotating shaft equipment or any shaft-mounted reducer assembly. Therefore it is important to secure the reducer in an axial direction onto the machine shaft, to prevent the reducer from shifting or walking out of place during operation.

Possible methods to secure the reducer axially to the machine shaft include:

- Using commercial set collars, retaining rings, or snap rings.
- Using the optional "NORD Fixing Element Kit" (see U10280).

The NORD Fixing Element Kit includes all of the necessary parts to secure the shaft by using a tapped hole in the end of the mating male shaft.

Loctite® is a registered trademark of Loctite Corporation U.S.A. and Henkel.

SHAFT FIXING KIT

1. Shaft fixing kit - basic design

The NORD Fixing Kit provides a method for securing the reducer in an axial direction, after the keyed-hollow shaft reducer is mounted onto the machine shaft. The fixing kit prevents the reducer from shifting or walking out of place during operation. NORD offers a variety of standard fixing kits, based upon bore size, as shown on Page 2 of this manual.

Figure 1 – Fixing kit components

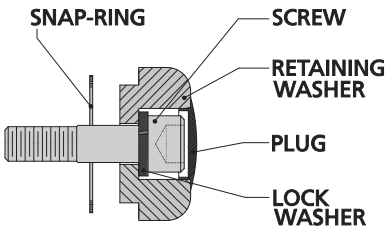

IMPORTANT NOTE

For installation of the keyed-hollow bore reducer to the machine-shaft, see user manual U10270.

2. Assembly types

There are two types of assembly methods commonly used for securing the fixing kit.

Figure 2 – Fixing kit assembly methods

Type 1

The machine-shaft is located against a fixed snap-ring located inside the bore of the reducer.

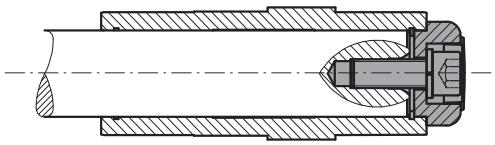

Type 2

The machine shaft is shouldered and is pulled tight against the hollow-shaft; the snap-ring is no longer required.

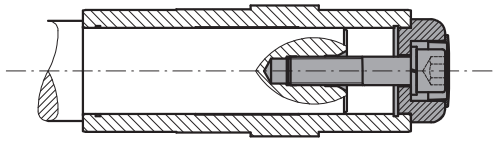

NOTICE

The maximum edge break on the solid machine shaft must not exceed the values shown on Page 2 of this manual. Otherwise the load-bearing capacity of the snap-ring will be reduced and may result in failure.

3. Assembly

A. If using a Type 1 assembly, secure the appropriate snap-ring into the bore of the reducer. With Type 2 assembly, no snap-ring is required.

B. Draw the hollow bore gear reducer onto the machine shaft as instructed in U10270. Remember to apply a suitable assembly paste or anti-seize compound to the mating shafts.

C. Install the retaining washer over the end of the hollow bore.

D. Secure the appropriate cap-screw into the machine shaft and tighten the screw based upon the assembly type, as noted below. Then install the protective plug over the screw hole.

Type 1 - Screw tightening

Tighten until lightly snug and secure the screw with a thread-locking compound to prevent the screw from backing out.

NOTICE

Over tightening the retaining screw may cause the snap ring to be pulled out of its seating groove, causing damage to the hollow-bore or snap ring.

Type 2 - Screw tightening

Follow the cap screw manufactures guidelines and tighten the screw to the proper torque, based upon the bolt grade and material. For reference tightening torque values, also see manual U10060, Table 2.

4. Disassembly

When using Type 2 assembly, it is possible to design a simple disassembly tool to allow easier removal of the hollow-bore reducer. The solid shaft is shouldered to rest against the hollow-bore of the reducer. The machine shaft is supported in both of the hollow bore land areas, but the overall length is reduced compared to Type 1 assembly.

Figure 3 – Disassembly Tool

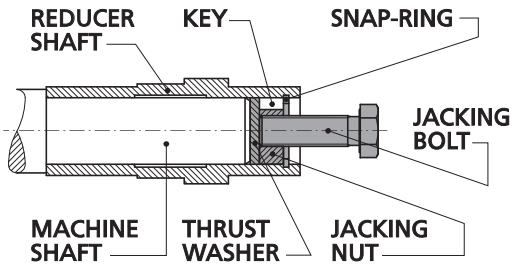

IMPORTANT NOTE

For suggestions on how to construct a disassembly tool for a particular reducer and bore size, please consult NORD's application engineering department.

5. Standard fixing kit size offerings

NORD offers a variety of standard fixing kit sizes as shown by the following tables.

Table 1 - Standard fixing kit size offerings

Shaft Bore [in]	Bolt Size	Allowable Thrust Groove ❷ lb [N]	Allowable Thrust Ring ❸ lb [N]	Max. Edge Break ❹ in [mm]
0.500	10-32	730 [3255]	520 [2300]	0.02 [0.5]
0.750	1/4-20	1800 [7905]	560 [2500]	0.04 [1]
1.000	3/8-16	2900 [13020]	1000 [4600]	0.04 [1]
1.188	7/16-14	5100 [22630]	1000 [4700]	0.04 [1]
1.250	7/16-14	5100 [22630]	1000 [4700]	0.04 [1]
1.375	5/8-11	6500 [29140]	1400 [6400]	0.06 [1.5]
1.438	5/8-11	6900 [30690]	1500 [6500]	0.06 [1.5]
1.500	5/8-11	7800 [34875]	1500 [6700]	0.06 [1.5]
1.625	5/8-11	9900 [44020]	1900 [8400]	0.08 [2]
1.688	5/8-11	10500 [46810]	1800 [8200]	0.08 [2]
1.938	5/8-11	11100 [49600]	1900 [8400]	0.08 [2]
2.000	5/8-11	14100 [62775]	2700 [12100]	0.08 [2]
2.063	5/8-11	14100 [62775]	2700 [12100]	0.08 [2]
2.188	5/8-11	16800 [74865]	2900 [13000]	0.08 [2]
2.375	3/4-10	17400 [77190]	2900 [13000]	0.08 [2]
2.438	3/4-10	17400 [77190]	2900 [13000]	0.08 [2]
2.750	3/4-10	19600 [87110]	4700 [21000]	0.10 [2.5]
2.938	3/4-10	20900 [93000]	4700 [21000]	0.10 [2.5]
3.188	3/4-10	27700 [123225]	7000 [31200]	0.12 [3]
3.438	3/4-10	29300 [130200]	7000 [31400]	0.12 [3]
3.625	3/4-10	30900 [137330]	7000 [31400]	0.12 [3]
3.938	7/8-9	32400 [144305]	6900 [30800]	0.12 [3]
4.000	7/8-9	39000 [173600]	16400 [73000]	0.12 [3]
4.063	7/8-9	39000 [173600]	16400 [73000]	0.12 [3]
4.375	7/8-9	41500 [184450]	16200 [72000]	0.12 [3]
4.438	7/8-9	41500 [184450]	16200 [72000]	0.12 [3]
4.750	7/8-9	44200 [196850]	15700 [70000]	0.12 [3]
4.938	7/8-9	48000 [213900]	15500 [69000]	0.12 [3]

Upon request, additional hollow-bore sizes & fixing kit sizes may be offered.

Shaft Bore [mm]	Bolt Size	Allowable Thrust Groove ❷ N [lb]	Allowable Thrust Ring ❸ N [lb]	Max. Edge Break ❹ mm [in]
16	M5	Not applicable ❶		
20	M6	8370 [1900]	5600 [1300]	1.0 [0.04]
25	M10	12400 [2800]	7300 [1600]	1.0 [0.04]
30	M10	17515 [3900]	7200 [1600]	1.0 [0.04]
35	M12	29140 [6500]	8700 [1900]	1.5 [0.06]
40	M16	41850 [9400]	10900 [2400]	2.0 [0.08]
45	M16	46810 [10500]	10700 [2400]	2.0 [0.08]
50	M16	62775 [14100]	19000 [4300]	2.0 [0.08]
60	M20	74865 [16800]	29200 [6600]	2.0 [0.08]
70	M20	87110 [19600]	30300 [6800]	2.5 [0.10]
80	M20	115630 [26000]	56000 [12600]	2.5 [0.10]
90	M24	130200 [29300]	56000 [12600]	3.0 [0.12]
100	M24	144305 [32400]	55000 [12400]	3.0 [0.12]
110	M24	181350 [40800]	71000 [16000]	3.0 [0.12]
120	M24	196850 [44300]	70000 [15700]	3.0 [0.12]

Upon request, additional hollow-bore sizes and fixing kit sizes may be offered.

❶ This fixing kit is not supplied with a snap-ring. A Type 2 machine shaft is required.

❷ Thrust load-bearing capacity of the groove is based upon using a hollow-shaft material with a yield-strength of at least 45,000 psi (310 N/mm²).

❸ Thrust load-bearing capacity of the snap-ring is based upon a typical snap-ring material with a yield-strength of at least 30,500 psi (210 N/mm²).

❹ On the solid machine shaft, observe the maximum edge break (radius or chamfer) shown. A larger edge break will result in reduced load-bearing capacity of the snap-ring.

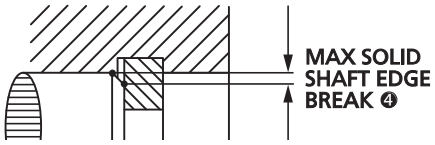

HOLLOW SHAFT WITH SHRINK DISC

1. Shrink disc design concept

A shrink disc option is adaptable to many NORD hollow-bore reducers. The shrink disc applies a high-capacity, zero backlash, interference fit to the driven machine shaft. The double tapered inner ring converts most all of the screw clamping load into radial contact pressure, as the outer clamping discs are pulled together by proper tightening of the locking screws. As the inner ring is contracted, the clearance between the customer solid shaft and reducer shaft is absorbed.

- In their relaxed state, shrink discs provide a generous assembly clearance, thus eliminating the typical assembly and disassembly challenges of using interference fits.
- Shrink discs also reduce solid machine shaft stresses by eliminating the need for shaft keys and keyways.
- When properly applied, high shrink fits help eliminate shaft fretting corrosion and allow for easier shaft mounting and dismounting.

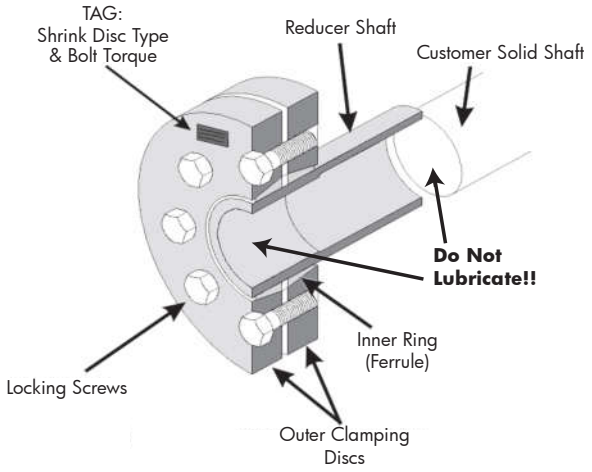

2. Solid (machine) shaft design guidelines

Always use a solid shaft material of adequate strength and apply proper shaft fits in order to establish adequate clamping force during assembly and assure proper shaft release during disassembly.

- Use solid shaft material with yield strength of at least 52,260 psi (360 N/mm²).
- The solid machine shaft should be machined according to ISO 286-2, Class h6 fit tolerances, with a shaft finish of 125 micro inches (3.2 µm) or smoother, per Table 1.
- The solid machine shaft must extend the full length of the reducer hollow shaft.

IMPORTANT NOTE

Contact NORD when using a shrink disc in an application where the shrink disc connection must simultaneously transmit torque and thrust.

3. Safety

NOTICE

- The supporting solid shaft or driven machine shaft must be of adequate size and strength to withstand normal operating loads and peak loads without damage to itself or any of the system components.
- The transmissible torque and the gripping capacity of the shrink disc may be reduced if shaft tolerances or clearances are larger than specified.
- Excessive tightening torque can result in permanent deformation of the inner ring and the reducer hollow bore, making disassembly very difficult. Do not over tighten the shrink disc to compensate for excessive clearance between the machine shaft and reducer bore.
- Observe the published ratings and safety factors for both the reducer and shrink disc. Overload conditions or excessively high torque can cause the shrink disc connection to slip. In extreme cases localized galling or welding of components may occur.

4. Shrink disc shaft tolerances

Recommended solid shaft tolerances and reducer bore tolerances are shown in the table below.

Table 1: Shrink disc shaft tolerances

Above & Including ø [in]	To & Including ø [in]	Solid Shaft Tolerance ø [in]	Reducer Bore Tolerance ø [in]	Max. Assembly Clearance [in]
0.7500	1.1250	+0.0000 / -0.0005	+0.0008 / -0.0000	0.0013
1.1250	1.9375	+0.0000 / -0.0006	+0.0009 / -0.0000	0.0015
2.0000	3.1250	+0.0000 / -0.0007	+0.0011 / -0.0000	0.0018
3.1875	4.6875	+0.0000 / -0.0008	+0.0013 / -0.0000	0.0021
4.7500	7.0625	+0.0000 / -0.0009	+0.0015 / -0.0000	0.0024
7.1250	7.5000	+0.0000 / -0.0011	+0.0018 / -0.0000	0.0029

Above ø [mm]	To & Including ø [mm]	Solid Shaft Tolerance ø [mm]	Reducer Bore Tolerance ø [mm]	Max. Assembly Clearance [mm]
18	30	+0.000 / -0.013	+0.021 / -0.000	0.034
30	50	+0.000 / -0.016	+0.025 / -0.000	0.041
50	80	+0.000 / -0.019	+0.030 / -0.000	0.049
80	120	+0.000 / -0.022	+0.035 / -0.000	0.057
120	180	+0.000 / -0.025	+0.040 / -0.000	0.065
180	190	+0.000 / -0.029	+0.046 / -0.000	0.075

Shaft/bore tolerances per ISO 282-6, Class h6/H7.

Solid shaft finish should be 125 micro inches (3.2 micro meters) or smoother.

5. Installation

⚠ WARNING

Disconnect all power sources from the equipment before beginning this installation procedure. Gearmotors, variable frequency drives and gear reducers contain potentially dangerous high voltage, rotating components and surfaces that may become hot during operation. Handle the components with care and avoid all sharp machined edges to prevent personal injury.

NOTICE

Do not tighten any of the shrink disc locking screws prior to installing the reducer with shrink disc onto the machine shaft. The inner ring of the shrink disc can become permanently contracted or damaged at relatively low tightening torque.

A. Inspect the gear unit received. Make sure the shrink disc and extended hollow shaft projection is on the side of the reducer where it was specified or ordered.

B. Loosen the shrink disc locking screws but do not take the shrink disc completely apart. Remove and discard any packaging material or transportation spacers that come with the shrink disc.

C. Remove all burrs, rust, corrosion, lubricants, and foreign matter from the surfaces of the solid shaft and hollow-bore.

D. Make sure the shrink disk is positioned onto the hollow shaft until the outer clamping ring is flush with the edge of the hollow shaft.

E. To aid in assembly, it is acceptable to lightly grease the solid shaft, only in the area that will come in contact with the bronze-bushing side of the reducer hollow-shaft. ***The reducer hollow shaft must be completely de-greased and free of lubricant, especially in the area of the shrink disc.***

F. Position the gear reducer onto the solid machine shaft and make certain the area under the shrink disc is completely supported by the solid shaft.

G. After confirming the proper positioning of gear reducer and the shrink disc, hand tighten (3) or (4) equally spaced locking screws to make sure the outer collars of the shrink disc are drawn together in a parallel fashion. Then hand-tighten the remaining screws.

H. Refer to Table 2 for the specified tightening torques for the shrink disc locking screws. Using a properly set torque wrench using approximately ¼ (90°) turns; tighten the locking screws, by working in a circular clockwise or counterclockwise sequence around the shrink disc.

I. Continue the tightening sequence (Step H.) even if some locking screws initially require very low tightening torque to achieve ¼ turns; do this for several passes until ¼ turns can no longer be achieved.

J. Reset the torque wrench to approximately 3-5% over-torque and tighten the locking screws for 1 or 2 more passes. This procedure will compensate for relaxation of the locking screws, since tightening of a given screw will always tend to relax the adjacent screw. Without a slight overtorquing of the screws, an infinite number of passes would be required to reach the desired tightening torque.

Table 2 - Shrink Disc Locking Screw Torque

Screw Size	Wrench Size [mm]	Tightening Torque [Nm]	[lb-in]	[lb-ft]
M5	8	7	62	5.2
M6	10	12	106	8.9
M8	13	30	266	22
M10	17	59	522	44
M12	19	100	885	74
M16	24	250	2213	184
M20	30	490	4337	361
M24	36	840	7435	620
M30	46	1700	15050	1254

BOLT TIGHTENING PATTERN

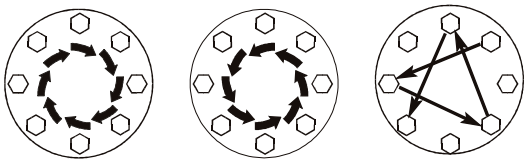

CLOCKWISE CIRCULAR PATTERN **RIGHT**

COUNTER CLOCKWISE CIRCULAR PATTERN **RIGHT**

STAR PATTERN **WRONG**

K. Reset the torque wrench to the correct tightening torque as indicated in Table 2. Make sure each locking screw has been properly tightened until the screws are no longer turning at the specified torque wrench setting. If necessary repeat Steps G. & H.

6. Removal

A. Loosen the shrink disc locking screws in a circular pattern by using ½ (180°) turns, until the shrink disc hub can be moved or until the shrink disc hub and reducer shaft will return to their original fits.

⚠ WARNING

Do not completely remove the locking screws before the outer clamping disks of the shrink disc are disengaged from the inner ring. A sudden release of the outer collars will create high separating forces and could result in injury or even death.

B. Loosen the outer collars of the shrink disc from the tapered inner ring. This may require tapping the bolts with a **soft faced** hammer or prying lightly between the outer collars.

C. Remove the gear reducer from the machine shaft.

7. Re-installation

A. It may be possible to re-use the shrink disc. However the shrink disk should not be re-used if it becomes damaged during removal, or excessively rusty or corroded. Shrink discs must always be disassembled and thoroughly cleaned before re-using.

B. After cleaning the shrink disc, lubricate between the taper of the outer clamping disks and the outside of the inner ring using MOLYKOTE® G-Rapid Plus Paste (product of Dow Corning) or equivalent. In addition, grease screw threads and head contact area with multi-purpose grease.

1. General information

The NORD GRIPMAXX™ keyless bushing system is adaptable to most all NORD shaft-mounted reducers. The bushing system offers interchangeable bushings to accommodate a large range of driven machine-shaft sizes.

The unique design of the NORD GRIPMAXX™ bushing system offers a number of distinct advantages as follows:

- The NORD GRIPMAXX™ allows the machine builder to utilize standard cold finished shaft stock, without the need for additional shaft machining or shaft keys.
- It uses a NORD shrink disc to apply a high-capacity, zero backlash, interference fit to the driven machine shaft, while eliminating the typical assembly and disassembly challenges of using interference fits.
- The built in clearance between the customer shaft and the bushing system helps to ensure easy installation and removal of the gearbox. To help ensure easy removal, the NORD GRIPMAXX™ bushings are prepared with a special low-wear, corrosion-resistant hardened surface treatment, that minimizes the formation of shaft corrosion and fretting.
- The NORD GRIPMAXX™ is ideal for start-stop operation and bi-directional loading because it does not depend on keys or keyways that transmit torque, which can also can become loose or deform when subjected to these loading conditions.
- Unlike the typical conical or tapered bushing kits, the NORD GRIPMAXX™ design allows a tight fit against a shouldered machine shaft.
- The torque bushing and support bushing are the same part and are fully interchangeable with one another.

2. GRIPMAXX™ assembly detail

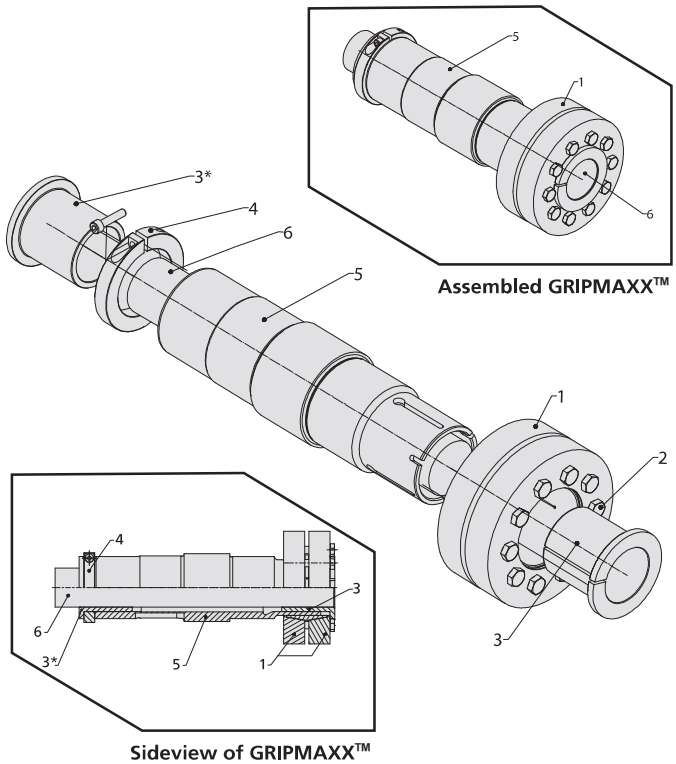

Assembled GRIPMAXX™

Sideview of GRIPMAXX™

[1] NORD Shrink Disc
[2] Locking Screw
[3] Bushing (Torque Side)
[3*] Bushing (Support Side)
[4] Clamp Ring
[5] Gear Reducer Hollow Shaft
[6] Machine Shaft

IMPORTANT NOTE

NORD recommends that the machine shaft have a yield strength of at least 52,260psi (360N/mm²)

IMPORTANT NOTE

Observe the recommended machine shaft tolerances in table 1, page 2.

NOTICE

The supporting solid shaft or driven machine shaft must be of adequate size and strength to withstand normal operating loads and peak loads without damage to itself or any of the system components.

3. Installation

⚠ WARNING

Disconnect all power sources from the equipment before beginning this installation procedure. Gearmotors, variable frequency drives and gear reducers contain potentially dangerous high voltage, rotating components and surfaces that may become hot during operation. Handle the components with care and avoid all sharp or machined edges to prevent personal injury.

NOTICE

Do not tighten any of the shrink disc locking screws prior to installing the reducer with shrink disc onto the machine shaft. The inner ring of the shrink disc can become permanently contracted or damaged at a relatively low tightening torque.

Table 1 - Required Machined Shaft Tolerance

Inch Machine Shaft			Metric Machine Shaft		
From	To	ISO 286-2 Tolerance h11(-)	Over	Including	ISO 286-2 Tolerance h11(-)
ø [in]	ø [in]	[in]	ø [mm]	ø [mm]	[mm]
0.4375	0.6875	- 0.004	10	18	- 0.11
0.7500	1.0625	- 0.005	18	30	- 0.13
1.1250	1.9375	- 0.006	30	50	- 0.16
2.0000	3.1250	- 0.007	50	80	- 0.19
3.1875	4.6875	-0.008	80	120	-0.22
4.7500	7.0625	-0.009	120	180	-0.25

A. Carefully inspect the machine shaft [6] and remove all burrs, rust, corrosion, lubricants, and foreign matter from the shaft surface. Verify that the diameter is within the dimensional tolerances shown in Table 1.

B. Inspect the gear unit received to confirm the correct position of the shrink disc [1]. Make sure the hollow shaft [5] projection is on the side of the reducer where it was specified or ordered.

C. In addition to cleaning the machine shaft [6], remove all dirt, grease or oils from the reducer hollow shaft [5], bushings [3], clamp ring [4], and shrink disk [1]. ***Do not apply lubricants, corrosion preventatives, anti-sieze compounds or coatings to the mating surfaces of the shaft, bushings, clamp collars or shrink disc.***

D. Position the clamp ring [4] and support bushing [3*] over the machine shaft [6], making sure the support bushing is in its desired location. Then secure the support bushing [3*] with the clamp ring [4] and tighten the clamp ring screw.

E. Slide the gear reducer onto the machine shaft [6] until the gear reducer stops against the secured support bushing [3*].

F. Without taking the shrink disc [1] apart, loosen the shrink disc locking screws [2]. Slide the shrink disk over the reducer shaft [5] and slide the torque bushing [3] onto the machine shaft, making sure it is seated completely.

G. Confirm the positioning of the shrink disc [1] and torque bushing [3]. ***Do not tighten the shrink disc until the machine shaft and torque bushing are in proper position, or the reducer shaft will be damaged.*** Hand-tighten 3 or 4 or locking screws [2] and make sure the outer collars of the shrink disc are drawn together in a parallel fashion and then hand-tighten the remaining screws.

H. Refer to Table 2 for the specified tightening torques for the shrink disc locking screws. Using a properly set torque wrench using approximately ¼ (90°) turns; tighten the locking screws, by working in a circular clockwise or counterclockwise sequence around the shrink disc.

I. Continue the tightening sequence (Step H.) even if some locking screws initially require very low tightening torque to achieve ¼ turns; do this for several passes until ¼ turns can no longer be achieved.

J. Reset the torque wrench to approximately 3-5% overtorque and tighten the locking screws for 1 or 2 more passes. This procedure will compensate for relaxation of the locking screws, since tightening of a given screw will always tend to relax the adjacent screw. Without a slight overtorquing of the screws, an infinite number of passes would be required to reach the desired tightening torque.

Table 2 - Shrink Disc Locking Screw Torque

Screw Size	Wrench Size [mm]	Tightening Torque [Nm]	[lb-in]	[ft-lb]
M5	8	7	62	5.2
M6	10	12	106	8.9
M8	13	30	266	22
M10	17	59	522	44
M12	19	100	885	74
M16	24	250	2213	184
M20	30	490	4337	361

BOLT TIGHTENING PATTERN

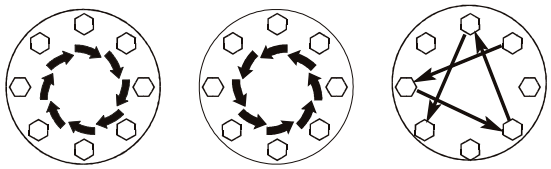

CLOCKWISE CIRCULAR PATTERN **RIGHT**

COUNTER CLOCKWISE CIRCULAR PATTERN **RIGHT**

STAR PATTERN **WRONG**

K. Reset the torque wrench to the correct tightening torque as indicated in Table 2. Make sure each locking screw has been properly tightened until the screws are no longer turning at the specified torque wrench setting. If necessary repeat Steps G. & H.

5. Bushing kit removal

A. Loosen the shrink disc locking screws [2] in circular pattern by using ½ (180°) turns, until the shrink disc hub can be moved or until the shrink disc hub and reducer shaft will return to their original fits.

> ⚠ ***WARNING***
>
> Do not completely remove the locking screws before the outer clamping disks of the shrink disc are disengaged from the inner ring. A sudden release of the outer collars will create high separating forces and may result in injury or even death.

B. Loosen the outer collars of the shrink disc from the tapered inner ring. This may require tapping the bolts with a **soft faced** hammer or prying lightly between the outer collars.

C. Remove the gear reducer from the machine shaft.

6. Re-installation

A. It may be possible to re-use the bushings and shrink disc that are part of the NORD bushing system. However these components should not be re-used if they are damaged during removal, or excessively rusty or corroded.

B. Never re-use any of the bushing kit components without prior cleaning. Shrink discs must always be disassembled and thoroughly cleaned before re-using.

C. After cleaning the shrink disc, lubricate between the taper of the outer clamping disks and the outside of the inner ring using MOLYKOTE® G-Rapid Plus Paste (product of Dow Corning) or equivalent. In addition, grease screw threads and head contact area with multipurpose grease.

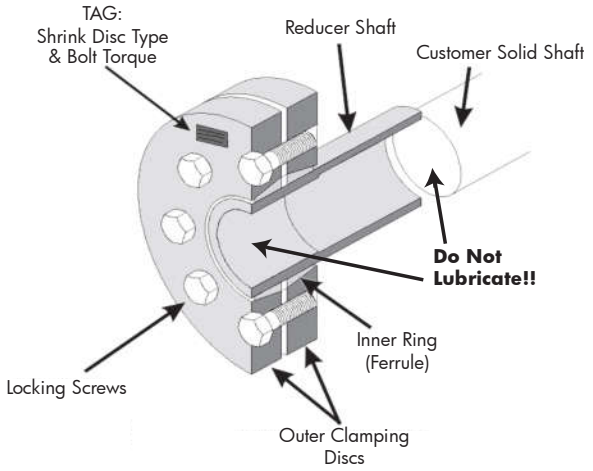

REDUCER MOUNTING
FOOTED & FLANGE MOUNT GEAR UNITS

1. Foot-mounted reducers

When installing the foot-mounted gear unit, observe the flatness specifications and bolt tightening torque guidelines provided in U10060 and make sure the mating mounting surface and reducer feet are clean and free of debris. Use of shims under the feet of the gear unit may be required in order to align the output shaft to the driven equipment. Make sure that all feet are supported so that the housing will not distort when it is bolted down. Improper shimming will cause mis-alignment and may reduce the life of the gear unit or cause component failure. Dowel pins may be field-installed to help prevent misalignment and ensure proper realignment if removed for service.

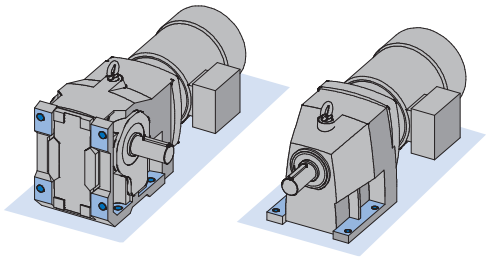

IMPORTANT NOTE

Gear units may be subjected to radial loads or side pull, caused by external chain drives or belt drives. In these instances it is recommended that the mounting base be designed with a slide-plate adjustment to accommodate extra slack in the chain or the belt after the feet are loosened. When using an external chain or belt drive, make sure the reducer is sized so that the shaft and bearings have adequate capacity.

2. Flange-mounted reducers (with B5 flange)

When using the B5 flange to mount the gear unit, the bulk head plate must be engineered to minimize buckling distortions and support the cantilevered weight of the gear reducer or gearmotor. When the mating hole is designed with the proper fit, the flange pilot tenon provides a means of accurately positioning the reducer while the hold-down bolts are properly secured; once the reducer is secured, the tenon helps prevent movement of the reducer and it helps locate the center of the reducer output shaft. The flange centering shoulder tolerance for standard units is listed in table 1. For units with NSD Tuph please see table 2 on the following page.

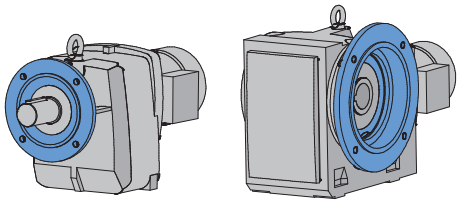

Table 1 : Flange Centering Shoulder Tolerance

Above ø (in)	To & Including ø (in)	Tolerance (in)	ISO 286-2 Fit Class
1.969	3.150	+0.0005 / -0.0003	j6
3.150	4.724	+0.0005 / -0.0004	j6
4.724	7.087	+0.0006 / -0.0004	j6
7.087	9.055	+0.0006 / -0.0005	j6
9.055	9.843	+0.0000 / -0.0011	h6
9.843	12.402	+0.0000 / -0.0013	h6
12.402	15.748	+0.0000 / -0.0014	h6
15.748	19.685	+0.0000 / -0.0016	h6
19.685	21.654	+0.0000 / -0.0017	h6

Above ø (mm)	To & Including ø (mm)	Tolerance (mm)	ISO 286-2 Fit Class
50	80	+0.012 / -0.007	j6
80	120	+0.013 / -0.009	j6
120	180	+0.014 / -0.011	j6
180	230	+0.016 / -0.013	j6
230	250	+0.000 / -0.029	h6
250	315	+0.000 / -0.032	h6
315	400	+0.000 / -0.036	h6
400	500	+0.000 / -0.040	h6
500	550	+0.000 / -0.044	h6

When installing the flange mounted gear unit, observe the flatness specifications and bolt tightening torque guidelines provided in U10060. Make sure the mating mounting surface and reducer flange are clean and free of debris. Use a straight edge or parallel bar to check for high spots on the mating mounting surface and remove any raised material around the mounting holes.

Set the gear unit into place and tighten the bolts until they are snug. Before final bolt-tightening check for any material gaps between the mating surfaces and if shimming is required, use "U" shaped shims at least 2 times the width of the bolt. Avoid over shimming a very irregular surface as this will make it very difficult to achieve proper alignment.

IMPORTANT NOTE

For heavy shock applications, it is advisable to field-install dowel pins through the mounting flange connection (in addition to the mounting bolts). This will help control flange movement or flange rotation and relieve the mounting bolts from this additional stress.

3. Flange-mounted reducers (with B14 flange)

When using the B14 flange to mount the gear unit, the bulk head plate must be engineered to minimize buckling distortions and support the cantilevered weight of the gear reducer or gearmotor. When properly installed, the output flange of the reducer housing is designed to enable the permissible torques and radial forces to be reliably transmitted by the bolt connections. The flange centering shoulder tolerance for standard units is listed in table 1 on the previous page. For units with NSD Tuph please see table 2 below.

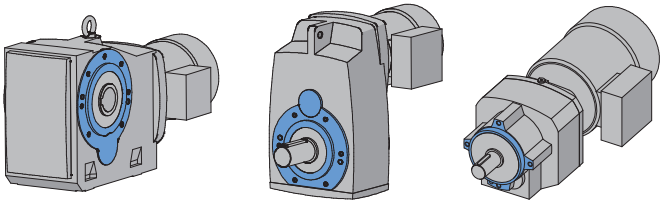

IMPORTANT NOTE

When using the B14 flange-face for mounting, if dowel pin holes are provided in addition to the threaded holes, then it is advisable to also use the proper dowel pins, to help control flange movement or flange rotation and relieve the mounting bolts from this additional stress This is especially important for heavy shock applications.

Table 2 : Flange Centering Shoulder Tolerance on NSD Tuph Units

Above ø (in)	To & Including ø (in)	Tolerance (in)
1.969	3.150	+0.0020 / +0.0013
3.150	4.724	+0.0021 / +0.0012
4.724	7.087	+0.0021 / +0.0011
7.087	9.055	+0.0022 / +0.0011

Above ø (mm)	To & Including ø (mm)	Tolerance (mm)
50	80	+0.052 / +0.033
80	120	+0.053 / +0.031
120	180	+0.054 / +0.029
180	230	+0.056 / +0.027

4. Foot & flange reducer housings

Some gear reducer housings are available with a foot and an output flange. Units with a foot and a B5 Flange are designated with the suffix XF after the primary model number and units with a B14 face-flange are designated with the suffix XZ after the primary model number. When a gear unit is provided with both a foot and a flange, the foot is consider the primary mounting surface. The flange is generally considered to be the secondary mounting option and it is intended that this surface be used for auxiliary add on elements that place minimal load stress on the reducer housing.

NOTICE

To prevent overstress on the main gear unit housing, never tighten the reducer mounting feet and the mounting flange against one-another. Auxiliary add-on elements that are mounted to the reducer flange, must not transmit excessive force, torque or vibration to the main gear housing.

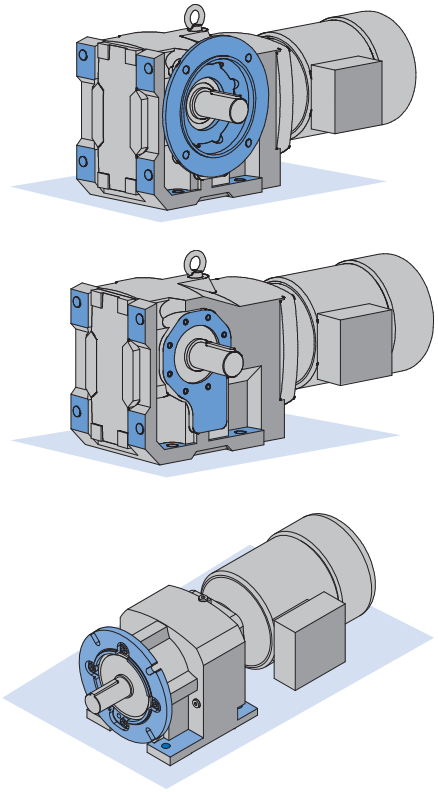

CLINCHER™ SHAFT-MOUNT WITH RUBBER BUFFERS

1. Purpose of the built-in torque arm lug

The preferred method of installing a shaft-mounted Clincher™ reducer is to support the weight of the gear unit or gearmotor assembly from the driven solid machine shaft. In order to restrain the gearbox, react the torque, and keep the gear unit from spinning around the shaft, the Clincher™ gear units have a built-in torque arm lug or tab cast into the reducer housing. This torque tab is intended to be used in conjunction with the NORD Rubber Buffers.

Figure 1: Built-in torque lug

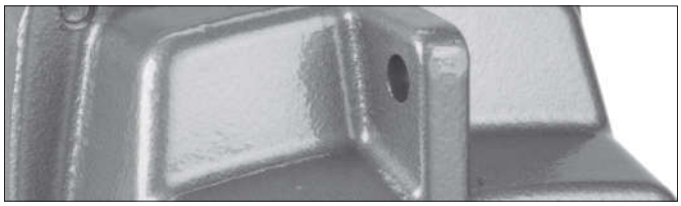

2. Rubber buffers

When specified, NORD provides two rubber buffers that are installed on either side of the gear unit's integral torque lug.

When properly used in tandem, on either side of the torque-arm lug, the rubber buffers help isolate and absorb the load forces present in the system and increase the reducer's service life by reducing cumulative torsional shock loads.

- The primary load force acts in the direction of driven shaft rotation, reacts the torque of the reducer, keeping the gearbox from spinning on the shaft.
- Additional forces present themselves in the direction opposite of the shaft rotation, due to the typical slight out-of-round condition present in the machine shaft. This condition is the reason most shaft mounted-reducers have a slight shaft-wobble, which is normal.

For further dampening it is possible to combine several rubber buffers in a row, on either side of the torque lug.

IMPORTANT NOTE

Please reference Table 1 on page 2 of this manual for dimensional information.

NOTICE

Always mount at least one rubber buffer on either side of the reducer's torque-arm lug. When using rubber buffers in tandem, make sure equal numbers are used on both sides of the torque tab. Failure to do so will not properly cushion the reducer and can result in excessive binding, bearing stress, and damage to the reducer.

3. Machine support

WARNING

It is the responsibility of the machine builder to design a support bracket of adequate strength and rigidity, and supply an appropriate tightening bolt assembly. Failure to do so may result in injury caused from a damaged or broken torque-reaction assembly.

A single customer-supplied machine support bracket, of adequate strength and rigidity, can provide adequate restraint for both directions. This is because when the rubber buffer system is used, the applied load forces are always parallel to the retaining bolt and there are no twisting forces induced onto the bolt in either the clockwise or counter-clockwise direction. In some cases the customer may desire to supply a rigid support on either side of the rubber buffers. In these instances, longer assembly hardware is required.

4. Installation of the rubber buffers

A. Install the Clincher™ hollow bore reducer onto the machine shaft. Line up the hole in the reducer's torque-arm lug with the hole in the machine's support bracket and temporarily hold the reducer in place.

B. Properly secure the gear unit assembly to the driven shaft in an axial direction. If using the NORD Shaft Fixing Kit, follow the instructions in User Manual U10280.

C. Install the rubber buffers on either side of the gear unit's torque-arm lug. Apply a thread locking compound to the end of the fixing bolt. Then place the fixing bolt through the rubber buffers, torque-arm lug and rigid machine support bracket and loosely secure the nut onto the end of the bolt.

D. Tighten the fixing bolt and nut until lightly snug until all of the free play is eliminated from the rubber buffer assembly. Then snug the fixing bolt assembly by tightening an additional 1/4 to 1/2 turn.

NOTICE

To help prevent damage to the rubber buffers, avoid over-tightening.

IMPORTANT NOTE

- A min. of (2) rubber buffers are required for each unit.
- For larger size CLINCHER'S™, NORD offers the heavy-duty rubber buffer (Option VG).
- A metric fixing bolt is preferred for rubber buffer assembly. NORD recommends a minimum ISO Grade 8.8 fixing bolt.

CLINCHER™ SHAFT-MOUNT WITH RUBBER BUFFERS

Table 1: Rubber buffer assembly/typical dimensions

Standard Rubber Buffer Assembly Option **(G)**

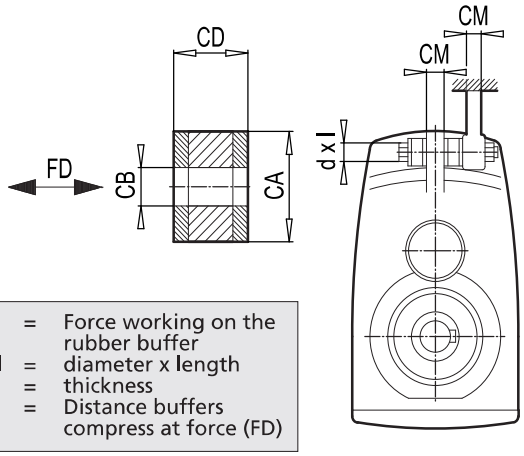

FD = Force working on the rubber buffer
d x l = diameter x length
c = thickness
S_{FD} = Distance buffers compress at force (FD)

Heavy Duty Rubber Buffer Assembly Option **(VG)**

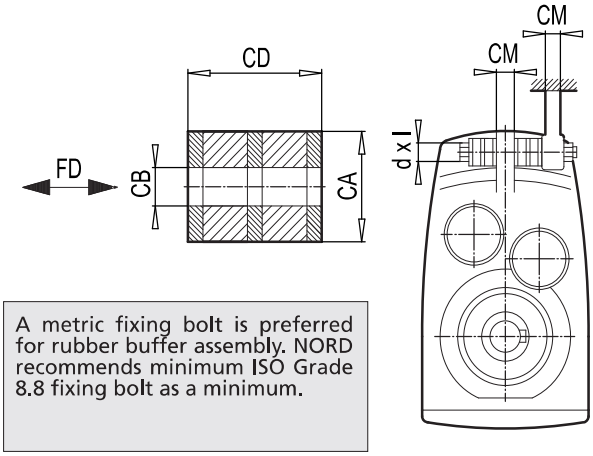

A metric fixing bolt is preferred for rubber buffer assembly. NORD recommends minimum ISO Grade 8.8 fixing bolt as a minimum.

Type	Rubber Buffer P/N	CB inch [mm]	CA inch [mm]	CD inch [mm]	CM inch [mm]	Bolt d x l [metric]	FD lb [kN]	SFD inch [mm]
SK0182NB G	29603000	0.43 [11]	1.18 [30]	0.59 [15]	0.39 [10]	M10 x 70	217 [0.967]	0.06 [1.5]
SK0282NB G	29603000	0.43 [11]	1.18 [30]	0.59 [15]	0.47 [12]	M10 x 70	234 [1.04]	0.07 [1.7]
SK1282 G	29603000	0.43 [11]	1.18 [30]	0.59 [15]	0.55 [14]	M10 x 80	504 [2.24]	0.14 [3.6]
SK1382NB G	29603000	0.43 [11]	1.18 [30]	0.59 [15]	0.55 [14]	M10 x 80	402 [1.79]	0.11 [2.8]
SK2282 G SK2382 G	29604000	0.49 [12.5]	1.57 [40]	0.59 [15]	0.63 [16]	M12 x 90	600 [2.67]	0.07 [1.8]
SK3282 G SK3382 G	29604000	0.49 [12.5]	1.57 [40]	0.59 [15]	0.71 [18]	M12 x 90	935 [4.16]	0.11 [2.9]
SK4282 G SK4382 G	29606000	0.83 [21]	2.36 [60]	1.18 [30]	0.87 [22]	M20 x 150	1661 [7.39]	0.29 [7.3]
SK5282 G SK5382 G	29606000	0.83 [21]	2.36 [60]	1.18 [30]	1.1 [28]	M20 x 150	2133 [9.49]	0.37 [9.4]
SK6282 G SK6382 G	29608000	0.98 [25]	3.15 [80]	1.57 [40]	1.38 [35]	M24 x 190	3779 [16.81]	0.36 [9.2]
SK7282 G SK7382 G	29608000	0.98 [25]	3.15 [80]	1.57 [40]	1.57 [40]	M24 x 200	4676 [20.8]	0.45 [11.4]
SK8282 G SK8382 G	29610000	1.22 [31]	3.94 [100]	1.97 [50]	1.97 [50]	M30 x 260	6382 [28.39]	0.64 [16.3]
SK9282 G SK9382 G	29610000	1.22 [31]	3.94 [100]	1.97 [50]	2.17 [55]	M30 x 260	9777 [43.49]	0.98 [24.9]

Type	Rubber Buffer P/N	CB inch [mm]	CA inch [mm]	CD inch [mm]	CM inch [mm]	Bolt d x l [metric]	FD lb [kN]	SFD inch [mm]
SK7282 VG SK7382 VG	29620850	0.98 [25]	3.35 [85]	2.36 [60]	1.57 [40]	M24 x 240	4676 [20.8]	0.48 [12.2]
SK8282 VG SK8382 VG	29621100	1.22 [31]	4.33 [110]	3.54 [90]	1.97 [50]	M30 x 340	6382 [28.39]	0.76 [19.3]
SK9282 VG SK9382 VG	29621400	1.22 [31]	5.51 [140]	4.33 [110]	2.17 [55]	M30 x 380	9777 [43.49]	0.83 [21.2]
SK10282 VG SK10382 VG SK10382.1 VG	29621800	1.22 [31]	5.51 [140]	4.33 [110]	3.15 [80]	M30 x 430	12670 [56.36]	1.08 [27.4]
SK11282 VG SK11382 VG SK11382.1 VG	29621800	1.93 [49]	7.09 [180]	5.91 [150]	3.54 [90]	M48 x 550	18185 [80.89]	1.52 [38.5]
SK12382 VG	29621800	1.93 [49]	7.09 [180]	5.91 [150]	3.54 [90]	M48 x 550	23720 [105.51]	1.98 [50.2]

RIGHT-ANGLE SHAFT-MOUNT WITH TORQUE ARM (D)

1. Torque arm (D)

The preferred method of installing a shaft-mounted reducer is to support the weight of the gear unit or gearmotor assembly from the driven solid machine shaft. A torque arm is required in order to restrain the gearbox, react the load torque, and keep the gear unit from spinning around the shaft.

The Torque-Arm (D) bracket is mounted to either side of the right-angle gear unit using mounting screws that thread into the B14 flange-face of the reducer. The anchor hole of the torque-arm bracket is supplied with a resilient rubber bushing.

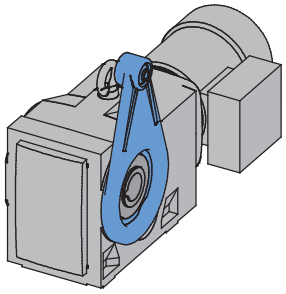

IMPORTANT NOTE

The side of the reducer that the torque arm is mounted on, and the angular position can be specified at time of order. Consult the appropriate NORD catalog for specific Torque Arm (D) mounting options and ordering guidelines.

2. Purpose of the built-in resilient rubber bushing

The resilient rubber bushing installed into the anchor hole end of the torque-arm helps isolate and absorb all the load forces present in the system and increase the reducer's service life by reducing cumulative torsional shock loads.

- The primary load force acts in the direction of driven shaft rotation, reacts the load torque of the reducer, and prevents the gearbox from spinning on the shaft.
- Additional forces present themselves in the direction opposite of the shaft rotation, due to the typical slight out-of-round condition present in the machine shaft. This condition is the reason most shaft mounted-reducers have a slight shaft-wobble, which is normal.

NOTICE

Always make sure that the Torque Arm (D) has the resilient rubber bushing installed into the anchor hole end of the torque arm. Failure to do so will not properly cushion the reducer and can result in excessive binding, bearing stress, and damage to the reducer.

3. Machine support

The user must supply a suitably strong and rigid mating machine support that provides load bearing capacity on both sides of the torque-arm bracket.

WARNING

It is the responsibility of the machine builder to design a support bracket of adequate strength and rigidity, and supply an appropriate tightening bolt assembly. Failure to do so may result in injury caused from a damaged or broken torque-reaction assembly.

4. Installation of a right-angle reducer with torque arm

A. Make sure the Torque-Arm (D) is mounted in the correct position on the reducer. Assembled screw heads should always sit flush with the torque arm.
   - To reposition the torque-arm, remove the mounting screws, relocate the torque-arm, and reassemble the mounting screws as noted above.
   - If the torque-arm was shipped loose, position the torque-arm in the correct location on the gear unit, and secure the torque-arm as noted above.

IMPORTANT NOTES

- Torque arm mounting screws should be secured with a thread locking product (ex. Loctite® 242 or Loxeal® 54-03) and tightened per the table on page 2.
- Assembled screw heads should always sit flush with the torque arm.
- The support bracket should provide support on both sides of the torque arm or be in the form of a U-shape.
- Do not force the torque-arm. The torque arm must remain at a right angle to the gear unit.
- If mounting holes do not align properly the machine support may need to be moved.

B. Install the right-angle hollow bore reducer onto the machine shaft. Then line up the hole in the reducer's torque-arm with the hole in the machine's support bracket, and temporarily hold the reducer in place.

C. Apply a thread locking compound such as Loctite® 242 or Loxeal® 54-03 to the end of the anchor bolt that is used to secure the torque arm in place.

D. Place the anchor bolt through the support bracket and the reducer torque-arm. Attach the mating nut to the bolt and tighten the assembly until snug. At least one bolt diameter should protrude from the nut after assembly.

NOTICE

Do not force misalignment of the torque-arm. The torque arm must remain at a right angle to the gear unit or excessive load may be placed on the reducer shaft and bearings.

E. Properly secure the gear unit assembly to the driven shaft in an axial direction.

Table 1 - Torque Arm (D) with rubber buffer

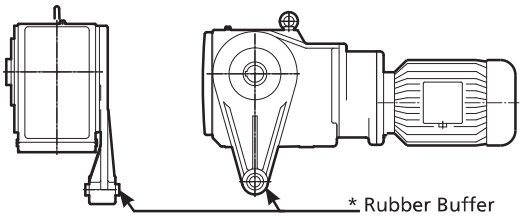

- For all 90.1 Series Helical-Bevel gear units, NORD also offers a bottom mount Torque Arm (K). See User Manual U10620.
- For the large 90.1 Series Helical-Bevel gear units sizes: SK9082.1, SK9086.1, SK9092.1, and SK9096.1, please use the Torque Arm (K).
- A metric fixing bolt is preferred for fastening the Torque-Arm(D) to the machine support bracket.

Gear Unit Series	Torque Arm				Torque Arm Mounting Screw				
	Type	Rubber Buffer P/N	Anchor Hole Size	Anchor Bolt Size	Qty	Size	Grade	Torque (Nm)	Torque (lb-ft)
92.1/93.1 Series Helical-Bevel	SK92072.1AD/SK93072.1AD	29602505	10.5 mm [0.41 in]	M10	4	M8 x 25	8.8	27	20
	SK92172.1AD/SK93172.1AD	29602505	10.5 mm [0.41 in]	M10	4	M8 x 25	8.8	27	20
	SK92372.1AD/SK93372.1AD	29602505	10.5 mm [0.41 in]	M10	4	M10 x 30	8.8	53	39
	SK92672.1AD/SK93672.1AD	29602505	10.5 mm [0.41 in]	M10	4	M10 x 30	8.8	53	39
	SK92772.1AD/SK93772.1AD	29603605	16.5 mm [0.65 in]	M16	4	M12 x 30	8.8	92	68
92 Series Helical-Bevel	SK92172AZD	29602505	10.5 mm [0.41 in]	M10	8	M6 x 16	8.8	11	8
	SK92372AZD	29602505	10.5 mm [0.41 in]	M10	8	M8 x 25	8.8	27	20
	SK92672AZD	29602505	10.5 mm [0.41 in]	M10	8	M8 x 25	8.8	27	20
	SK92772AZD	29603605	16.5 mm [0.65 in]	M16	8	M8 x 25	8.8	27	20
90.1 Series Helical-Bevel	SK9012.1AZD/SK9013.1AZD	29602505	10.5 mm [0.41 in]	M10	7	M8 x 20	8.8	27	20
	SK9016.1AZD/SK9017.1AZD	29602505	10.5 mm [0.41 in]	M10	7	M8 x 20	8.8	27	20
	SK9022.1AZD/SK9023.1AZD	29603605	16.5 mm [0.65 in]	M16	7	M8 x 25	8.8	27	20
	SK9032.1AZD/SK9033.1AZD	29603605	16.5 mm [0.65 in]	M16	7	M10 x 30	8.8	53	39
	SK9042.1AZD/SK9043.1AZD	29605205	25 mm [0.98 in]	M24	7	M12 x 35	8.8	92	68
	SK9052.1AZD/SK9053.1AZD	29605205	25 mm [0.98 in]	M24	7	M12 x 35	8.8	92	68
	SK9072.1AZD	29605205	25 mm [0.98 in]	M24	7	M16 x 45	8.8	230	170
Helical-Worm	SK02040AZD	29602505	10.5 mm [0.41 in]	M10	4	M6 x 20	8.8	11	8
	SK02050AZD/SK13050AZD	29602505	10.5 mm [0.41 in]	M10	4	M8 x 20	8.8	27	20
	SK12063AZD/SK13063AZD	29602505	10.5 mm [0.41 in]	M10	7	M8 x 22	8.8	27	20
	SK12080AZD/SK13080AZD	29602505	10.5 mm [0.41 in]	M10	7	M10 x 25	8.8	53	39
	SK32100AZD/SK33100AZD	29603605	16.5 mm [0.65 in]	M16	7	M12 x 30	8.8	92	68
	SK42125AZD/SK43125AZD	29603605	16.5 mm [0.65 in]	M16	7	M12 x 30	8.8	92	68
MINICASE® SMI Series Worm	SK1SMI31AZD	29602505	10.5 mm [0.41 in]	M10	4	M6 x 16	8.8	11	8
	SK1SMI40AZD/SK2SMI40AZD	29602505	10.5 mm [0.41 in]	M10	4	M8 x 22	8.8	27	20
	SK1SMI50AZD/SK2SMI50AZD	29602505	10.5 mm [0.41 in]	M10	4	M8 x 22	8.8	27	20
	SK1SMI50AZD/SK2SMI50AZD	29602505	10.5 mm [0.41 in]	M10	4	M8 x 22	8.8	27	20
	SK1SMI63AZD/SK2SMI63AZD	29602505	10.5 mm [0.41 in]	M10	4	M10 x 25	8.8	53	39
	SK1SMI75AZD	29602505	10.5 mm [0.41 in]	M10	4	M12 x 30	8.8	92	68
MINICASE® SM Series Worm	SK1SM31AZD	29602505	10.5 mm [0.41 in]	M10	4	M6 x 20	8.8	11	8
	SK1SM40AZD/SK2SM40AZD	29602505	10.5 mm [0.41 in]	M10	4	M8 x 20	8.8	27	20
	SK1SM50AZD/SK2SM50AZD	29602505	10.5 mm [0.41 in]	M10	4	M8 x 20	8.8	27	20
	SK1SM63AZD/SK2SM63AZD	29602505	10.5 mm [0.41 in]	M10	4	M8 x 20	8.8	27	20
"FLECBLOC™ SI Series Worm"	SK1SI31D	29602505	10.5 mm [0.41 in]	M10	4	M6 x 16	8.8	11	8
	SK1SI40D	29602505	10.5 mm [0.41 in]	M10	4	M8 x 22	8.8	27	20
	SK1SI50D	29602505	10.5 mm [0.41 in]	M10	4	M8 x 22	8.8	27	20
	SK1SI63D	29602505	10.5 mm [0.41 in]	M10	4	M10 x 25	8.8	53	39
	SK1SMI75D	29602505	10.5 mm [0.41 in]	M10	4	M12 x 30	8.8	92	68

90.1 HELICAL-BEVEL SHAFT-MOUNT WITH BOTTOM MOUNT TORQUE ARM (K)

1. Torque arm (K)

The preferred method of installing a shaft-mounted reducer is to support the weight of the gear unit or gearmotor assembly from the driven solid machine shaft. A torque arm is required in order to restrain the gearbox, react to the load torque, and keep the gear unit from spinning around the shaft.

Table 1 (Page 2) provides a list of Torque-Arm (K) part numbers available for the 90.1 Series Helical-Bevel gear units. The Torque Arm (K) is secured to the base of the reducer. On most sizes there is an integral resilient rubber bushing located at the fastening hole-end of the torque arm. On the larger sizes, rubber buffers are used in conjunction with the torque arm and when properly used they are applied in tandem, on either side of the torque arm lug.

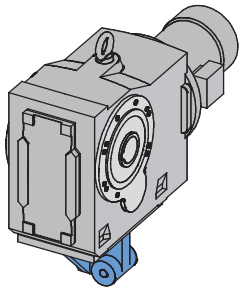

IMPORTANT NOTE

When ordering the Torque Arm (K) one can specify which side of the reducer to mount the fastening hole that bolts to the machine support bracket. Consult the appropriate NORD catalog for specific Torque Arm (K) mounting options and ordering guidelines.

2. Purpose of the rubber bushing or rubber buffers

Regardless if the Torque Arm (K) is supplied with the integral rubber bushing or whether separate rubber buffers are required, the bushing/buffers help isolate and absorb all the load forces present in the system and increase the reducer's service life by reducing cumulative torsional shock loads.

- The primary load force acts in the direction of driven shaft rotation, reacts the load torque of the reducer, and prevents the gearbox from spinning on the shaft.
- Additional forces present themselves in the direction opposite of the shaft rotation, due to the typical slight out-of-round condition present in the machine shaft. This condition is the reason most shaft mounted-reducers have a slight shaft-wobble, which is normal.

NOTICE

Always make sure that the Torque Arm (K) is used in conjunction with the required rubber bushing/s. Failure to do so will not properly cushion the reducer and can result in excessive binding, bearing stress, and damage to the reducer.

3. Machine support

The user must supply a suitably strong and rigid mating machine support that provides load bearing capacity on both sides of the machine support bracket.

WARNING

It is the responsibility of the machine builder to design a support bracket of adequate strength and rigidity, and supply an appropriate tightening bolt assembly. Failure to do so may result in injury caused from a damaged or broken torque-reaction assembly.

4. Installation of the right-angle reducer with torque arm (K)

A. Make sure the Torque-Arm (K) is mounted so that the machine fastening hole is on the correct side of the reducer.
   - The torque-arm can be repositioned on the as-received unit by removing the fixing screws, re-position the torque-arm in the correct location, and re-securing the fixing screws to the proper tightening torque, as indicated in Table 2 (Page 2).
   - If the torque-arm was shipped loose, position the torque-arm in the correct location on the gear unit, and secure the torque-arm with the proper fixing screws & tightening torque, as indicated in Table 2 (Page 2).

B. Install the right-angle hollow bore reducer onto the machine shaft. Line up the hole in the reducer's torque-arm with the hole in the machine's support bracket ,and temporarily hold the reducer in place

C. Properly secure the gear unit assembly to the driven shaft in an axial direction.

D. Apply thread locking compound to the end of the fixing bolt, then place the fastening bolt through the rigid machine support bracket and reducer torque-arm and loosely secure the nut onto the end of the bolt.

E. If the torque arm has an integral rubber bushing follow step F and skip steps G-H. If the torque arm uses rubber buffers skip forward to steps G-H.

F. Tighten the fixing bolt to the proper tightening torque as indicated in Table 2 (Page 2).

G. Install the rubber buffers on either side of the gear unit's torque-arm lug and place the fixing bolt through the rubber buffers and torque-arm lug and into the rigid machine support bracket.

H. Tighten the fixing bolt and nut lightly snug, until all the free-play is eliminated from the rubber buffer assembly. Then snug the fixing bolt assembly by tightening an additional ¼ to ½ turn.

NOTICE

To prevent damage to the rubber buffers, avoid over-tightening.

90.1 HELICAL-BEVEL SHAFT-MOUNT WITH BOTTOM MOUNT TORQUE ARM (K)

Torque Arm (K) with integrated bushing

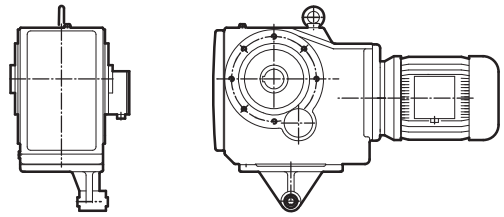

Available for Sizes SK9012.1 - SK9072.1

Torque Arm (K) with rubber buffer

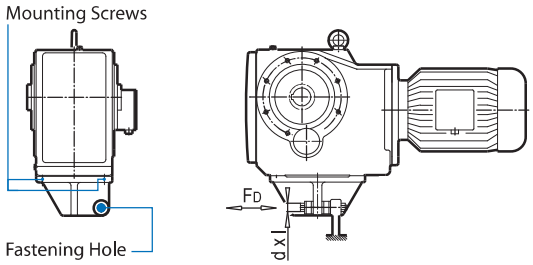

Available for Sizes SK9082.1 - SK90906.1

- For most all 90.1 series Helical-Bevel gear units, an optional tear-drop shaped side -mounted torque arm (D) is available. See user manual U10600.
- A metric fixing bolt is preferred for fastening the torque arm (K) to the machine support bracket.

Type	Torque Arm P/N	Reducer Hardware Hex Head Cap Screws + Lock Washer	Mounting Screw P/N	Lock Washer P/N	Rubber Buffer P/N	Fastening Hole In [mm]	Fastening Bolt Size	Bolt d x l [metric]	FD lb [N]	SFD inch [mm]
SK9012.1...K SK9013.1...K	68190600	M10 X 30 + A10 (Qty 3 Ea.)	22010300	28560106	N/A	0.41 [10.5]	M10	N/A	N/A	N/A
SK9016.1...K SK9017.1...K	68190600	M10 X 30 + A10 (Qty 3 Ea.)	22010300	28560106	N/A	0.41 [10.5]	M10	N/A	N/A	N/A
SK9022.1...K SK9023.1...K	68290610	M12 X 35 + A12 (Qty 3 Ea.)	22012350	28560126	N/A	0.65 [16.5]	M16	N/A	N/A	N/A
SK9032.1...K SK9033.1...K	68390610	M12 X 35 + A12 (Qty 3 Ea.)	22012350	28560126	N/A	0.65 [16.5]	M16	N/A	N/A	N/A
SK9042.1...K SK9043.1...K	68490610	M16 X 40 + A16 (Qty 3 Ea.)	22016400	28560166	N/A	0.98 [25]	M24	N/A	N/A	N/A
SK9052.1...K SK9053.1...K	68590620	M16 X 40 + A16 (Qty 3 Ea.)	22016450	28560166	N/A	0.98 [25]	M24	N/A	N/A	N/A
SK9072.1...K	68690620	M24 X 60 + A24 (Qty 4 Ea.)	22024060	28560246	N/A	0.98 [25]	M24	N/A	N/A	N/A
SK9082.1...K SK9082.1...SHK	68819010	M24 x 65 + A24 (Qty 4 Ea.)	22024650	22024650	29610000	1.22 [31]	M30	M30 x 260	5300 [23.64]	0.53 [13.5]
SK9086.1...K SK9086.1...SHK	68819010	M24 x 65 + A24 (Qty 4 Ea.)	22024650	22024650	29610000	1.22 [31]	M30	M30 x 260	6900 [30.77]	0.69 [17.6]
SK9092.1...SHK	68919010	M36 x 90 + A36 (Qty 4 Ea.)	22036900	28560366	29610000	1.22 [31]	M30	M30 x 260	10300 [45.71]	1.03 [26.2]
SK9096.1...SHK	69019000	M42 x 120 + A42 (Qty 4 Ea.)	22042120	28560426	29621800	1.93 [49]	M48	M48 x 550	12,500 [55.56]	1.06 [27.0]

HELICAL & BEVEL REDUCER LUBRICATION

1. Importance of proper lubrication

Proper gearbox lubrication is essential in order to reduce friction, heat, and component wear. Lubricants reduce heat and wear by inserting a protective "fluid boundary" between mating parts and preventing direct metal to metal contact. Lubricants also help prevent corrosion and oxidation, minimize foam, improve heat transfer, optimize reducer efficiency, absorb shock loads and reduce noise.

Most NORD reducers are shipped from the factory with a pre-determined oil fill level in accordance to the specified reducer size and mounting position.

2. Standard oil type

The following tables indicate the standard oil fill type used. Please see user manual U11000 for more specific information and for optional helical and bevel gear lubricants:

Serviceable Gear Units	
Helical In-line	Standard Oil Fill: ISO VG 220, Mineral Oil
Clincher Parallel-Shaft	
Right-Angle Bevel	
NORDBLOC® Series In-line	
NORDBLOC®.1 Series In-line	
Standard Series In-line	

IMPORTANT NOTE

For shipping purposes, the following large Clincher™ gear units are supplied without oil:
- Clincher™ Sizes SK11282, SK11382, SK11382.1 and SK12382

Maintenance-free / Lubricated For Life Gear Units	
Clincher™ sizes SK0182NB, SK0282NB & SK1382NB	Standard Oil Fill: ISO VG220 SHC/PAO Synthetic Oil
NORDBLOC® Sizes SK172, SK272, SK371F, SK372, SK373, SK320	

IMPORTANT NOTE

Maintenance-free units are supplied as sealed units with no vent-plug. Consult NORD prior to ordering if interested in ordering any of the above sizes as serviceable gear units.

IMPORTANT NOTE

Consult the sticker adjacent to the fill plug to determine the type of lubricant installed at the factory. Some units have special lubricants designed to operate in certain environments or intended to extend the service life or service temperature range of the lubricant. If in doubt about which lubricant is needed for a certain application, please contact NORD Gear.

3. Lubrication replacement

If the gear unit is filled with mineral oil, the lubricant should be replaced at least after every 10,000 operating hours or after every two years. If the gear unit is filled with synthetic oil, the lubricant should be replaced at least after every 20,000 operating hours or after every four years. Often gear reducers are exposed to extreme ambient conditions, hostile environments, wet conditions, or dirty and dusty operating areas. Especially in these situations, it is important to establish a condition-based oil service interval.

4. Oil viscosity

Viscosity, or the oil's resistance to shear under load, is often considered the single most important property of any gear oil.

- Often one will consider making a viscosity correction to the oil to improve the performance when operating the gear unit at low temperature or high temperature.
- In cases of extreme load conditions, gear pairs and antifriction bearings may be more susceptible to sliding or scuffing wear. In these operating conditions, it may also be beneficial to consider an increased lubrication viscosity and/or a lubrication with improved antiwear additive packages.

IMPORTANT NOTE

The user should consult with their primary lubrication supplier before considering changes in oil type or viscosity.

5. Maximum oil sump temperature limit

To prevent reducer overheating, the reducer's maximum oil sump temperature limit must not be exceeded for prolonged periods of operation (up to 3 hours continuous operation depending upon reducer size).

Oil Type	Maximum Oil Temperature Limit	
	NORD	AGMA 9005-D94
Mineral	80-85°C (176-185°F)	95°C (203°F)
Synthetic	105°C (220°F)	107°C (225°F)

IMPORTANT NOTE

Use caution when specifying gear reducers for high temperature service. If there is concern about exceeding the allowable safe operating temperatures, please consult NORD to discuss alternatives.

6. The importance of routine oil analysis

Routine oil analysis, sound lubrication practices, and good tracking of oil performance trends will help establish proper lubrication maintenance and change-out intervals. To maximize equipment reliability, NORD Gear generally recommends a condition-based lubrication maintenance program. One may take exceptions to this general recommendation on sealed-for-life or maintenance-free gear units or smaller and less costly gear units. In these instances, the replacement cost of the gear unit is often small compared to the costs associated with this type of oil analysis program.

NOTICE

NORD suggests replacing the gear oil if oil analysis indicates any of the following. Failure to replace the oil may cause internal damage to gearbox and diminished performance:

- Viscosity has changed by approximately 10% or more.
- Debris particles (silicon, dust, dirt or sand) exceed 25 ppm.
- Iron content exceeds 150-200 ppm.
- Water content is greater than 0.05% (500 ppm).
- The total acid number (TAN) tests indicate a significant level of oxidative break-down of the oil, and a critical reduction in performance; If the TAN number measured changes by more than 5% over the new oil, then an oil change would be recommended.

7. Mounting position and oil fill quantity

All NORD Gear reducers are shipped from the factory with a pre-determined oil fill level in accordance to the specified reducer size and mounting position. ***For additional information, please see the seperate mounting position diagrams and the corresponding oil fill quantity tables for the specified gear unit.***

The gearbox nametag will indicate the mounting position that was provided. ***For mounting orientations other than shown in the mounting position charts, please consult NORD Gear.***

IMPORTANT NOTE

Actual oil volume can vary slightly depending upon the gear case size, mounting and ratio. Prior to commissioning the reducer, check the oil-fill level using the reducer's oil-level plug and drain or add additional oil as needed. The minimum acceptable oil level is 0.15 in (4mm) below the oil level hole.

8. Oil plug locations

All gear units are assembled with the oil fill-level, oil-drain and vent plugs installed in their proper locations, according to the specified mounting position. All standard plugs are metric and utilize sealing gaskets between the head of the plug and the reducer housing.

9. Drain and fill-level plugs

All reducer drain plugs are metric socket head cap screws. For easier identification, it is NORD's standard practice to provide a hex-head screw for the fill-level plug. For ease of draining the used oil from the gear reducer, use the socket head screw located at the lowest part of the gearbox.


Drain Plug

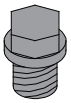
Fill Level Plug

10. Vent plug locations

Reducer venting allows for air pressure differences that occur during operation, between the inner space of the reducer and the atmosphere, while ensuring leak-free operation. The AUTOVENT™ is standard for all vented gear units, unless otherwise noted.

AUTOVENT™ - The AUTOVENT™ helps prevent bearing and gear damage by behaving like a check valve to block the entry of foreign material and prevent lubrication contamination from dust particles, moisture and air-borne process chemicals. The breather opens at approximately 0.3-0.9 psi during operation and closes tightly as the gearbox cools. This option is perfect for humid conditions and wash-down environments, helping to maintain proper oil cleanliness, while reducing foaming and oxidation.

Figure 1 AUTOVENT™ Types


Type 1

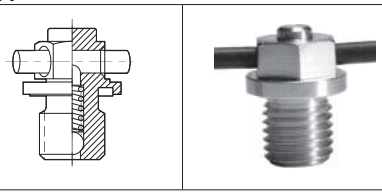
Type 2 with transportation plug

Open Vent - An optional open vent can be supplied by NORD. The open vent comes closed upon delivery with a transportation sealing plug (see Warning).

NOTICE

To prevent build-up of excessive pressure, sealed vents must be activated as shown prior to gear unit start up. Excessive pressure may cause damage to internal components and cause leakage.


Sealed vent

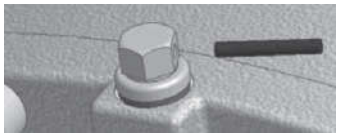
Activated vent

Filtered Vent - NORD may offer an optional filtered vent, which allows gases to permeate, but does not allow dust and debris to pass through the vent.

CONVEYOR DRIVE REDUCER LUBRICATION

1. Importance of proper lubrication

Proper gearbox lubrication is essential in order to reduce friction, heat, and component wear. Lubricants reduce heat and wear by inserting a protective "fluid boundary" between mating parts and preventing direct metal to metal contact. Lubricants also help prevent corrosion and oxidation, minimize foam, improve heat transfer, optimize reducer efficiency, absorb shock loads and reduce noise.

2. Factory oil type

All SK 9055 and SK9155 Conveyor Drive reducers shipped from the factory with a pre-determined oil fill level in accordance to the specified mounting position. Oil filling before shipment prevents damage from dry start-ups and helps assure that the proper lubrication is used.

Standard Oil Fill

The standard oil fill for the SK 9055 and SK 9155 Conveyor Drive is ISO VG 220, Mineral Oil.

Optional Oil Fill

Both synthetic and food grade oil options are also available upon request.

IMPORTANT NOTE

Consult the sticker adjacent to the fill plug to determine the type of lubricant installed at the factory. Some units have special lubricants designed to operate in certain environments or intended to extend the service life or service temperature range of the lubricant. If in doubt about which lubricant is needed for a certain application, please contact NORD Gear.

3. Lubrication replacement

If the gear unit is filled with mineral oil, the lubricant should be replaced at least after every 10,000 operating hours or after every two years. If the gear unit is filled with synthetic oil, the lubricant should be replaced at least after every 20,000 operating hours or after every four years. Often gear reducers are exposed to extreme ambient conditions, hostile environments, wet conditions, or dirty and dusty operating areas. Especially in these situations, it is important to establish a condition-based oil service interval.

4. Oil viscosity

Viscosity, or the oil's resistance to shear under load, is often considered the single most important property of any gear oil.

- Often one will consider making a viscosity correction to the oil to improve the performance when operating the gear unit at low temperature or high temperature.
- In cases of extreme load conditions, gear pairs and antifriction bearings may be more susceptible to sliding or scuffing wear. In these operating conditions, it may also be beneficial to consider an increased lubrication viscosity and/or a lubrication with improved antiwear additive packages.

IMPORTANT NOTE

The user should consult with their primary lubrication supplier before considering changes in oil type or viscosity.

5. Maximum oil sump temperature limit

To prevent reducer overheating, the reducer's maximum oil sump temperature limit must not be exceeded for prolonged periods of operation (up to 3 hours continuous operation depending upon reducer size).

Oil Type	Maximum Oil Temperature Limit	
	NORD	AGMA 9005-D94
Mineral	85°C (185°F)	95°C (203°F)
Synthetic	105°C (220°F)	107°C (225°F)

IMPORTANT NOTE

Use caution when specifying gear reducers for high temperature service. If there is concern about exceeding the allowable safe operating temperatures, please consult NORD to discuss alternatives.

CONVEYOR DRIVE REDUCER LUBRICATION

6. The importance of routine oil analysis

Routine oil analysis, sound lubrication practices, and good tracking of oil performance trends will help establish proper lubrication maintenance and change-out intervals. To maximize equipment reliability, NORD Gear generally recommends a condition-based lubrication maintenance program. One may take exceptions to this general recommendation on sealed-for-life or maintenance-free gear units or smaller and less costly gear units. In these instances, the replacement cost of the gear unit is often small compared to the costs associated with this type of oil analysis program.

NOTICE

NORD suggests replacing the gear oil if oil analysis indicates any of the following. Failure to replace the oil may cause internal damage to gearbox and diminished performance:

- Viscosity has changed by approximately 10% or more.
- Debris particles (silicon, dust, dirt or sand) exceed 25 ppm.
- Iron content exceeds 150-200 ppm.
- Water content is greater than 0.05% (500 ppm).
- The total acid number (TAN) tests indicate a significant level of oxidative break-down of the oil, and a critical reduction in performance; If the TAN number measured changes by more than 5% over the new oil, then an oil change would be recommended.

7. Mounting position and oil fill quantity

Please see the seperate mounting position diagrams and the corresponding oil fill quantity tables for the specified gear unit.

The gearbox nametag will indicate the mounting position that was provided. ***For mounting orientations other than shown in the mounting position charts, please consult NORD Gear.***

IMPORTANT NOTE

Actual oil volume can vary slightly depending upon the gear case size, mounting and ratio. Prior to commissioning the reducer, check the oil-fill level using the reducer's oil-level plug and drain or add additional oil as needed. The minimum acceptable oil level is 0.15 in (4mm) below the oil level hole.

8. Oil plug locations

All gear units are assembled with the oil fill-level, oil-drain and vent plugs installed in their proper locations, according to the specified mounting position. All standard plugs are metric and utilize sealing gaskets between the head of the plug and the reducer housing.

9. Drain and fill-level plugs

All reducer drain plugs are metric socket head cap screws. For easier identification, it is NORD's standard practice to provide a hex-head screw for the fill-level plug. For ease of draining the used oil from the gear reducer, use the socket head screw located at the lowest part of the gearbox.



Drain Plug

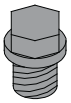

Fill Level Plug

10. Vent plug locations

Reducer venting allows for air pressure differences that occur during operation, between the inner space of the reducer and the atmosphere, while ensuring leak-free operation. The AUTOVENT™ is standard for all vented gear units, unless otherwise noted.

AUTOVENT™ - The AUTOVENT™ helps prevent bearing and gear damage by behaving like a check valve to block the entry of foreign material and prevent lubrication contamination from dust particles, moisture and air-borne process chemicals. The breather opens at approximately 0.3-0.9 psi during operation and closes tightly as the gearbox cools. This option is perfect for humid conditions and wash-down environments, helping to maintain proper oil cleanliness, while reducing foaming and oxidation.

Figure 1 AUTOVENT™ Types



Type 1

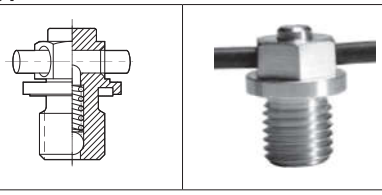

Type 2 with transportation plug

Open Vent - An optional open vent can be supplied by NORD. The open vent comes closed upon delivery with a transportation sealing plug (see Warning).

NOTICE

To prevent build-up of excessive pressure, sealed vents must be activated as shown prior to gear unit start up. Excessive pressure may cause damage to internal components and cause leakage.



Sealed vent

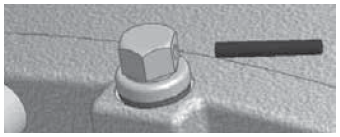

Activated vent

Filtered Vent - NORD may offer an optional filtered vent, which allows gases to permeate, but does not allow dust and debris to pass through the vent.

CONVEYOR DRIVE EXTENDED BEARING LUBRICATION

1. SK 9055 and SK 9155 Conveyor Drive Units

The NORD SK 9055 and SK 9155 Conveyor Drive reducers are designed to be a 'mounting flange and output shaft drop-in' for existing 'industry-standard' overhead conveyor drives.

2. Spread Bearing Design with Dry Cavity

The SK 9055 and SK 9155 Overhead Conveyor Drive gear units have two main features: a spread bearing design or large output bearing span and an oil leakage protection system. The spread bearing design enables the NORD box to handle high, overhung loads. The top bearing is a cylindrical roller bearing and the bottom bearing is a spherical roller bearing, selected for its high radial load capacity.

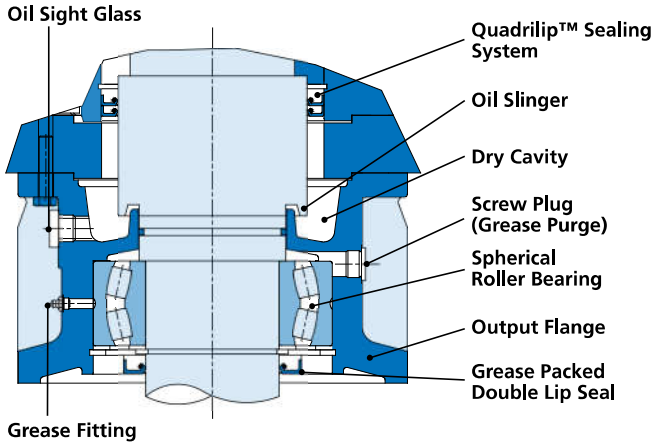

3. Service Guidelines for the Extended Bearing Flange

The spherical roller bearing on the extended bearing housing should be re-greased with 0.75 to 1.0 ounces (20-25 grams) of grease after every 2,500 hours of service or at least every 6 months. Prior to re-greasing the screw plug located opposite to the grease nipple should be unscrewed. After re-greasing the screw plug must be reinstalled and tightened. The extended bearing is factory assembled with the proper amount and type of grease. The type of grease supplied depends upon the type of oil specified at time of order.

Bearing Grease Options

Reducer Oil Type	NLGI Grade	Grease Thickener	Grease Base Oil	Ambient Temperature Range	Manufacturer Brand/Type
MIN-EP	NLGI 2	Li-Complex	MIN	-30 to 60°C (-22 to 140°F)	Mobil Grease XHP222
PAO	NLGI 2	Li-Complex	PAO	-40 to 80°C (-40 to 176°F)	Mobil / Mobilith SHC 220
FG or FG-PAO	NLGI 2	Polyurea	FG-PAO	-30 to 80°C (-22 to 176°F)	Mobil SHC Polyrex 222

NOTICE

Grease compatibility depends upon the type of thickener or soap complex used, the base oil type suspended within the thickener, and the type of additives used. The user should check with the lubrication supplier before making substitutions in brand and type in order to assure compatibility and to avoid causing possible damage to the extended bearing.

VL2 & VL3
EXTENDED BEARING LUBRICATION

1. VL2 – Spread Bearing Design

NORD offers reinforced output shaft bearings with increased bearing distance. The lower bearing is a oversized, double row spherical bearing, which absorbs high overhung and thrust loads while providing a longer bearing service life. The spherical roller bearing is especially useful in compensating for alignment errors in long agitator shafts. The VL2 spread bearing design is commonly used for shredders, mixers, overhead conveyors or applications requiring increased bearing load carrying capacities. Included with the VL2 design is a grease fitting for the lower bearing and a removable plug to allow excess grease to purge from the bearing cavity.

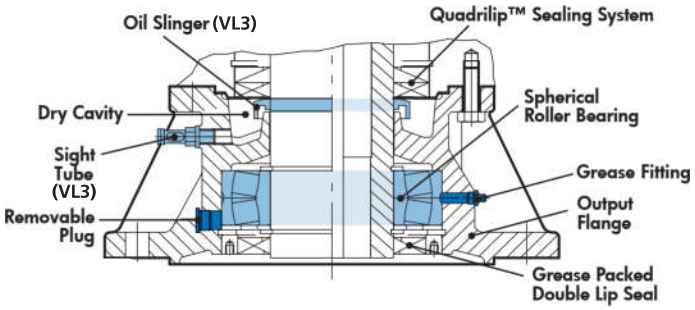

2. VL3 – Spread Bearing Design with Oil Safe Dry Cavity

The VL3 dry cavity design adds additional oil leak protective measures to the VL2 spread bearing design. NORD's Quadralip™ sealing system prevents oil from leaking from the gearbox into the VL2 flange. If in any case oil does leak past the Quadralip™ seals, it would flow down to the oil slinger mounted onto the shaft. As the shaft rotates, the oil will sling off into the dry cavity. A sight tube is provided for dry cavity inspection. At the bottom of the spread bearing flange is greased packed, double lip seal.

3. Service Guidelines for the Extended Bearing Flange

The spherical roller bearing on the extended bearing housing should be re-greased with 0.75 to 1.0 ounces (20-25 grams) of grease after every 2,500 hours of service or at least every 6 months. Prior to re-greasing the screw plug located opposite to the grease nipple should be unscrewed. After re-greasing the screw plug must be reinstalled and tightened. The extended bearing is factory assembled with the proper amount and type of grease. The type of grease supplied depends upon the type of oil specified at time of order.

Bearing Grease Options

Reducer Oil Type	NLGI Grade	Grease Thickener	Grease Base Oil	Ambient Temperature Range	Manufacturer Brand/Type
MIN-EP	NLGI 2	Li-Complex	MIN	-30 to 60°C (-22 to 140°F)	Mobil Grease XHP222
PAO	NLGI 2	Li-Complex	PAO	-40 to 80°C (-40 to 176°F)	Mobil / Mobilith SHC 220
FG or FG-PAO	NLGI 2	Polyurea	FG-PAO	-30 to 80°C (-22 to 176°F)	Mobil SHC Polyrex 222

NOTICE

Grease compatibility depends upon the type of thickener or soap complex used, the base oil type suspended within the thickener, and the type of additives used. The user should check with the lubrication supplier before making substitutions in brand and type in order to assure compatibility and to avoid causing possible damage to the extended bearing.

HELICAL-WORM REDUCER LUBRICATION

1. Importance of proper lubrication

Proper gearbox lubrication is essential in order to reduce friction, heat, and component wear. Lubricants reduce heat and wear by inserting a protective "fluid boundary" between mating parts and preventing direct metal to metal contact. Lubricants also help prevent corrosion and oxidation, minimize foam, improve heat transfer, optimize reducer efficiency, absorb shock loads and reduce noise.

NORD helical-worm reducers are shipped from the factory with a pre-determined oil fill level in accordance to the specified reducer size and mounting position.

2. Standard oil type

NORD helical worm gear reducers are filled with ISO VG 680 synthetic-hydrocarbon/polyalphaolefin (SHC/PAO) worm gear oil.

- SHC/PAO worm gear oils have good high and low temperature stability, are compatible with most paint and seal types, and are miscible with mineral oils.
- SHC/PAO worm gear oils also contain a small amount of organic ester and other antiwear (AW) packages to offer improved lubrication conditions, especially in the worm mesh, where a sideways sliding motion prevails.

Please see user manual U11020 for more specific information and for optional helical worm lubricants.

NOTICE

In worm gears avoid using extreme pressure (EP) gear oils containing sulfur-phosphorous chemistries; these additives can react adversely with bronze worm gears, and accelerate wear.

IMPORTANT NOTE

Consult the sticker adjacent to the fill plug to determine the type of lubricant installed at the factory. Some units have special lubricants designed to operate in certain environments or intended to extend the service life or service temperature range of the lubricant. If in doubt about which lubricant is needed for a certain application, please contact NORD Gear.

3. Lubrication replacement

The helical-worm gear oil should be replaced at least after every 20,000 operating hours or after every four years. Often gear reducers are exposed to extreme ambient conditions, hostile environments, wet conditions, or dirty and dusty operating areas. Especially in these situations, it is important to establish a condition-based oil service interval.

4. Efficiency

Helical worm gears reach efficiencies up to 92% and are generally much more efficient than worm-only gear units. However, it is important to consider the following, when using worm gears.

- Worm gears reach their peak rated efficiency, after they undergo a natural run-in process (up to 25 hours operating time at maximum rated load). Catalog published power and torque figures are based upon the rated efficiency after the run-in is complete.
- Worm gears have naturally lower startup efficiencies compared to operating efficiencies. As input speed increases the enhanced hydrodynamic effects of the oil result in less tooth friction and increased worm gear efficiency.

IMPORTANT NOTE

Worm gear reducers applied in cold temperature service, may require increased motor power for the following reasons:

- Lower operating temperatures, cause lubrication viscosity to increase in both the gearbox and in the moving areas of the driven machine.
- Worm-gears have naturally lower start-up efficiencies compared to operating efficiencies.
- In extreme cases, one might need to consider increasing the motor power and lowering the oil viscosity

5. Oil Viscosity

Viscosity, or the oil's resistance to shear under load, is often considered the single most important property of any gear oil.

- Often one will consider making a viscosity correction to the oil to improve the performance when operating the gear unit at low temperature or high temperature.
- In cases of extreme load conditions, gear pairs and antifriction bearings may be more susceptible to sliding or scuffing wear. In these operating conditions, it may also be beneficial to consider an increased lubrication viscosity and/or a lubrication with improved antiwear additive packages.

IMPORTANT NOTE

The user should consult with their primary lubrication supplier before considering changes in oil type or viscosity.

6. Maximum oil sump temperature limit

To prevent reducer overheating, the reducer's maximum oil sump temperature limit must not be exceeded for prolonged periods of operation (up to 3 hours continuous operation depending upon reducer size).

Oil Type	Maximum Oil Temperature Limit	
	NORD	AGMA 9005-D94
Synthetic	105°C (220°F)	107°C (225°F)

IMPORTANT NOTE

Use caution when specifying gear reducers for high temperature service. If there is concern about exceeding the allowable safe operating temperatures, please consult NORD to discuss alternatives.

HELICAL-WORM REDUCER LUBRICATION

7. The importance of routine oil analysis

Routine oil analysis, sound lubrication practices, and good tracking of oil performance trends will help establish proper lubrication maintenance and change-out intervals. To maximize equipment reliability, NORD Gear generally recommends a condition-based lubrication maintenance program. One may take exceptions to this general recommendation on sealed-for-life or maintenance-free gear units or smaller and less costly gear units. In these instances, the replacement cost of the gear unit is often small compared to the costs associated with this type of oil analysis program.

NOTICE

NORD suggests replacing the gear oil if oil analysis indicates any of the following. Failure to replace the oil may cause internal damage to gearbox and diminished performance:

- Viscosity has changed by approximately 10% or more.
- Debris particles (silicon, dust, dirt or sand) exceed 25 ppm.
- Iron content exceeds 150-200 ppm.
- Water content is greater than 0.05% (500 ppm).
- The total acid number (TAN) tests indicate a significant level of oxidative break-down of the oil, and a critical reduction in performance; If the TAN number measured changes by more than 5% over the new oil, then an oil change would be recommended.

8. Mounting position and oil fill quantity

All NORD Gear reducers are shipped from the factory with a pre-determined oil fill level in accordance to the specified reducer size and mounting position. ***For additional information, please see the seperate mounting position diagrams and the corresponding oil fill quantity tables for the specified gear unit.***

The gearbox nametag will indicate the mounting position that was provided. ***For mounting orientations other than shown in the mounting position charts, please consult NORD Gear.***

IMPORTANT NOTE

Actual oil volume can vary slightly depending upon the gear case size, mounting and ratio. Prior to commissioning the reducer, check the oil-fill level using the reducer's oil-level plug and drain or add additional oil as needed. The minimum acceptable oil level is 0.15 in (4mm) below the oil level hole.

9. Oil plug locations

All gear units are assembled with the oil fill-level, oil-drain and vent plugs installed in their proper locations, according to the specified mounting position. All standard plugs are metric and utilize sealing gaskets between the head of the plug and the reducer housing.

10. Drain and fill-level plugs

All reducer drain plugs are metric socket head cap screws. For easier identification, it is NORD's standard practice to provide a hex-head screw for the fill-level plug. For ease of draining the used oil from the gear reducer, use the socket head screw located at the lowest part of the gearbox.



Drain Plug

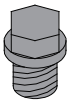

Fill Level Plug

11. Vent plug locations

Reducer venting allows for air pressure differences that occur during operation, between the inner space of the reducer and the atmosphere, while ensuring leak-free operation. The AUTOVENT™ is standard for all vented gear units, unless otherwise noted.

AUTOVENT™ - The AUTOVENT™ helps prevent bearing and gear damage by behaving like a check valve to block the entry of foreign material and prevent lubrication contamination from dust particles, moisture and air-borne process chemicals. The breather opens at approximately 0.3-0.9 psi during operation and closes tightly as the gearbox cools. This option is perfect for humid conditions and wash-down environments, helping to maintain proper oil cleanliness, while reducing foaming and oxidation.

Figure 1 AUTOVENT™ Types



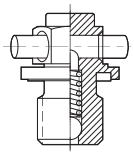



Type 1 | Type 2 with transportation plug

Open Vent - An optional open vent can be supplied by NORD. The open vent comes closed upon delivery with a transportation sealing plug (see Warning).

NOTICE

To prevent build-up of excessive pressure, sealed vents must be activated as shown prior to gear unit start up. Excessive pressure may cause damage to internal components and cause leakage.



Sealed vent

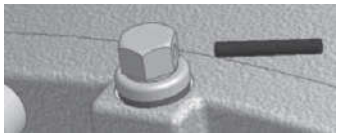

Activated vent

Filtered Vent - NORD may offer an optional filtered vent, which allows gases to permeate, but does not allow dust and debris to pass through the vent.

MINICASE® (SM SERIES) WORM GEAR LUBRICATION GUIDELINES

1. Importance of proper gearbox lubrication

Proper gearbox lubrication is essential in order to reduce friction, heat, and component wear. Lubricants reduce heat and wear by inserting a protective "fluid boundary" between mating parts and preventing direct metal to metal contact. Lubricants also help prevent corrosion and oxidation, minimize foam, improve heat transfer, optimize reducer efficiency, absorb shock loads and reduce noise.

2. Maintenance free design

MINICASE® (SM series) worm gear reducers are designed to be maintenance-free and are supplied completely sealed. They are factory oil-filled with a pre-determined oil fill amount in accordance to the specified reducer size and mounting position. The synthetic lubrication used is suitable for the life of the product so the MINICASE™ is inherently maintenance free.

3. Standard oil type

The standard factory oil fill for MINICASE® (SM) worm gear reducers is ISO viscosity VG synthetic hydrocarbon/polyalphaolefin (SHC/PAO oil) food grade oil suitable for NSF-H1 incidental contact and is a factory stocked lubricant. Food grade oil suitable for NSF-H1 incidental contact is a factory stocked option.

See user manual U11040 for specific information and for optional MINICASE® (SM) worm lubrication types and options.

NOTICE

In worm gears avoid using extreme pressure (EP) gear oils containing sulfur-phosphorous chemistries; these additives can react adversely with bronze worm gears, and accelerate wear.

4. Efficiency

It is important to consider the following, when using worm gears.

- Worm gears reach their peak rated efficiency, after they undergo a natural run-in process (up to 25 hours operating time at maximum rated load). Catalog published power and torque figures are based upon the rated efficiency after the run-in is complete.
- Worm gears have naturally lower startup efficiencies compared to operating efficiencies. As input speed increases the enhanced hydrodynamic effects of the oil result in less tooth friction and increased worm gear efficiency.

IMPORTANT NOTE

Worm gear reducers applied in cold temperature service, may require increased motor power for the following reasons:

- Lower operating temperatures, cause lubrication viscosity to increase in both the gearbox and in the moving areas of the driven machine.
- Worm-gears have naturally lower start-up efficiencies compared to operating efficiencies.
- In extreme cases, one might need to consider increasing the motor power and/or lowering the oil viscosity.

5. Maximum oil sump temperature limit

To prevent reducer overheating, the reducer's maximum oil sump temperature limit must not be exceeded for prolonged periods of operation (up to 3 hours continuous operation depending upon reducer size).

Oil Type	Maximum Oil Temperature Limit	
	NORD	AGMA 9005-D94
Synthetic	105°C (220°F)	107°C (225°F)

IMPORTANT NOTE

Use caution when specifying gear reducers for high temperature service. If there is concern about exceeding the allowable safe operating temperatures, please consult NORD to discuss alternatives.

MINICASE® (SM SERIES) WORM GEAR LUBRICATION GUIDELINES

6. Oil Viscosity

The viscosity rating determines the operating oil's resistance to shear under load conditions. Some important viscosity considerations include the following:

- Lightly loaded gears require lower viscosity oils than highly loaded gears.
- Lower viscosity will provide thin oil film, lower friction, higher mechanical efficiency, and better heat removal conditions.
- Higher viscosity will provide thicker oil film, and better resistance to sliding wear, scuffing wear, and galling at high pressure.
- Higher operating temperatures will cause a reduction in viscosity and lower operating temperatures, cause an increase in viscosity or a thickening of the oil.

The standard oil-fill is considered acceptable for most applications. In certain situations an oil viscosity change may be beneficial.

- If the gear unit is exposed to frequent high load conditions. A higher viscosity oil will have a higher film thickness offering better overall resistance to oil shear, sliding wear and scuffing wear in gears and roller element bearings.
- An oil viscosity correction or lubrication change may improve the overall performance when operating the gear unit at very low or high ambient temperature conditions.

IMPORTANT NOTE

The user should consult with their primary lubrication supplier before considering changes in oil type or viscosity.

7. Viscosity Index

Viscosity index helps quantify the rate of oil viscosity change with respect to temperature changes. Oils with a reasonably high viscosity index tend to be more stable in a changing temperature environment. The ability of an oil to maintain a small viscosity differential over the operating range of the gearbox provides a more consistent lubricating film and better wear performance.

Synthetic oils typically have a higher viscosity index than mineral oils and polyglycol oils tend to have an exceptionally high viscosity index compared to other synthetic oils like polyalphaolefin or ester based products.

MINICASE® (SMI/SMID) WORM GEAR LUBRICATION GUIDELINES

1. Importance of proper gearbox lubrication

Proper gearbox lubrication is essential in order to reduce friction, heat, and component wear. Lubricants reduce heat and wear by inserting a protective "fluid boundary" between mating parts and preventing direct metal to metal contact. Lubricants also help prevent corrosion and oxidation, minimize foam, improve heat transfer, optimize reducer efficiency, absorb shock loads and reduce noise.

2. Factory Oil-Filled / Maintence-Free

NORD modular worm gear units are inherently maintence-free, factory oil filled, and supplied with a high-quality, long-life, synthetic oil which is intend to be suitable for the life of the gear unit.

MINICASE® (SMI/SMID) worm gear units are assembled at the factory from stocked component parts. They are filled at time of assembly in accordance to the specified reducer mounting position. See user manuals U13150 and U13250 for more info.

3. Standard Oil Types

MINICASE® (SMI/SMID) worm gear units are factory filled with synthetic poly glycol oil. Food-grade polyglycol oil is optional. The specific oil type and viscosity grade are displayed on the reducer nameplate. See user manual 11050 for specific MINICASE® (SMI/SMID) worm lubrication types and options.

NOTICE

In worm gears avoid using extreme pressure (EP) gear oils containing sulfur-phosphorous chemistries; these additives can react adversely with bronze worm gears, and accelerate wear.

4. Efficiency

It is important to consider the following, when ordering worm gears.

- Worm gears reach their peak rated efficiency, after they undergo a natural run-in process (up to 25 hours operating time at maximum rated load). Catalog published power and torque figures are based upon the rated efficiency after the run-in is complete.
- Worm gears have naturally lower startup efficiencies compared to operating efficiencies. As input speed increases the enhanced hydrodynamic effects of the oil result in less tooth friction and increased worm gear efficiency.

IMPORTANT NOTE

Worm gear reducers applied in cold temperature service, may require increased motor power for the following reasons:

- Lower operating temperatures, cause lubrication viscosity to increase in both the gearbox and in the moving areas of the driven machine.
- Worm-gears have naturally lower start-up efficiencies compared to operating efficiencies.
- In extreme cases, one might need to consider increasing the motor power and lowering the oil viscosity

5. Optional Vent Kits

MINICASE® (SMI/SMID) worm gear units are designed to operate sealed or vented. As a standard the modular worm gear units are factory oil filled and supplied with oil plugs in the housing, making vent plugs optional. See user manual U14750.

NORD can supply an AUTOVENT™ or an open vent with each gear unit size. If a vent is desired the type must be specified at the time of order. Reducer vents are sealed with a transportation plug that must be removed prior to gear unit start-up.

Type	Transportation Seal	Installation	Part Number
AUTOVENT™	Included	Factory or Field site	66093510
Open Vent	None	Field Only	60693500
Open Vent	Included	Factory or Field site	22008004 (vent) 25308120 (gasket)

Unless noted by a seperate part number, vent kits include the housing gasket



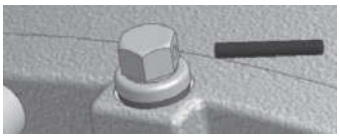

NOTICE

To prevent build-up of excessive pressure, sealed vents must be activated as shown prior to gear unit start-up. Excessive pressure may cause damage to internal components and cause leakage.

6. AUTOVENT™

The AUTOVENT™ helps prevent bearing and gear damage by behaving like a check valve to block the entry of foreign material and prevent lubrication contamination from dust particles, moisture and air-borne process chemicals. The breather opens at approximately 0.3-0.9 psi during operation and closes tightly as the gearbox cools. This option is perfect for humid conditions and wash-down environments, helping to maintain proper oil cleanliness, while reducing foaming and oxidation.

7. Open Vent

A typical gearbox industry open vent option can also be supplied by NORD. This option allows free exchange of air and does not build-up any back pressure inside the gear unit. This option is ideal for many operating conditions where the geared product is used in relatively clean and moisture-free environment.

8. When to Use a Sealed or a Vented Unit

There are many conditions that should be considered when deciding whether to use a sealed or vented unit.

1. If the duty cycle is intermittent, the run times are short, and any build-up of internal pressure or temperature is relatively low, the sealed unit option may be used.
2. If running continuous and under moderate to high load conditions, worm gears can generate higher operating temperatures and a build-up of internal pressure. In these instances a vent is strongly recommended. Consult NORD if operation at high load conditions is required.
3. If running continuous at 4-pole electric motor speeds (1800 rpm at 60 Hz) or higher, then a vent option is usually recommended. Consult NORD if operation at higher speeds is required.
4. Radial shaft seals produce a hydrodynamic pumping action to help push lubricant back into the gear unit, causing a small amount of ingested air and a small pressure increase (1-2 psi) that does not normally require a reducer vent; however when combined with continuous operation under high load (Condition 2), additional operating pressures will result and a vent should be used.
5. When the environment is contaminated with water, dirt, or other objects that may be ingested into the breather, increased wear of bearings, gearing, and lubrication breakdown can result. In these instances the sealed option or an AUTOVENT™ should be considered.

9. Maximum Oil Sump Temperature Limit

To prevent reducer overheating, the reducer's maximum oil-sump temperature limit must not be exceeded for prolonged periods of operation.

Oil Type	Maximum Oil Temperature Limit	
	NORD	AGMA 9005-D94
Synthetic	105°C (220°F)	107°C (225°F)

IMPORTANT NOTE

Use caution when specifying gear reducers for high temperature service. If there is concern about exceeding the safe operating temperature limit, please consult NORD to discuss alternatives.

10. Oil Viscosity

The viscosity rating determines the operating oil's resistance to shear under load conditions. Some important viscosity considerations include the following:

- Lightly loaded gears require lower viscosity oils than highly loaded gears.
- Lower viscosity will provide thin oil film, lower friction, higher mechanical efficiency, and better heat removal conditions.
- Higher viscosity will provide thicker oil film, and a better resistance to sliding wear, scuffing wear, and galling at high pressure.
- Higher operating temperatures will cause a reduc-tion in viscosity and lower operating temperatures, cause an increase in viscosity or a thickening of the oil.

The standard oil-fill is considered acceptable for most applications. In certain situations an oil viscosity change may be beneficial.

- If the gear unit is exposed to frequent high load conditions. A higher viscosity oil will have a higher film thickness offering better overall resistance to oil shear, sliding wear and scuffing wear in gears and roller element bearings.
- An oil viscosity correction or lubrication change may improve the overall performance when operating the gear unit at very low or high ambient temperature conditions.

IMPORTANT NOTE

The user should consult with their primary lubrication supplier before considering changes in oil type or viscosity.

11. Viscosity Index

Viscosity index helps quantify the rate of oil viscosity change with respect to temperature changes. Oils with a reasonably high viscosity index tend to be more stable in a changing temperature environment. The ability of an oil to maintain a small viscosity differential over the operating range of the gearbox provides a more consistent lubricating film and better wear performance.

Synthetic oils typically have a higher viscosity index than mineral oils and polyglycol oils tend to have an exceptionally high viscosity index compared to other synthetic oils like polyalphaolefin or ester based products.

FLEXBLOC™ (SI/SID SERIES) WORM GEAR LUBRICATION GUIDELINES

DRIVESYSTEMS — RETAIN FOR FUTURE USE — U10810 - 1 of 2

1. Importance of Proper Lubrication

Proper gearbox lubrication is essential in order to reduce friction, heat, and component wear. Lubricants reduce heat and wear by inserting a protective "fluid boundary" between mating parts and preventing direct metal to metal contact. Lubricants also help prevent corrosion and oxidation, minimize foam, improve heat transfer, optimize reducer efficiency, absorb shock loads and reduce noise.

2. Factory Oil-Filled / Maintence-Free

NORD modular worm gear units are inherently maintence-free, factory oil filled, and supplied with a high-quality, long-life, synthetic oil which is intend to be suitable for the life of the gear unit.

FLEXBLOC™ SI worm gear units are filled at time of assembly to a universal oil fill, allowing for many mounting position possibilities. See user manual U13300.

3. Standard oil type

FLEXBLOC™ (SI/SID) worm gear units are factory filled with synthetic poly glycol oil. Food-grade polyglycol oil is optional. The specific oil type and viscosity grade are displayed on the reducer nameplate. See user manual 11060 for specific FLEXBLOC™ (SI/SID) worm lubrication types and options.

NOTICE

In worm gears avoid using extreme pressure (EP) gear oils containing sulfur-phosphorous chemistries; these additives can react adversely with bronze worm gears, and accelerate wear.

4. Efficiency

It is important to consider the following, when ordering worm gears.

- Worm gears reach their peak rated efficiency, after they undergo a natural run-in process (up to 25 hours operating time at maximum rated load). Catalog published power and torque figures are based upon the rated efficiency after the run-in is complete.
- Worm gears have naturally lower startup efficiencies compared to operating efficiencies. As input speed increases the enhanced hydrodynamic effects of the oil result in less tooth friction and increased worm gear efficiency.

IMPORTANT NOTE

Worm gear reducers applied in cold temperature service, may require increased motor power for the following reasons:

- Lower operating temperatures, cause lubrication viscosity to increase in both the gearbox and in the moving areas of the driven machine.
- Worm-gears have naturally lower start-up efficiencies compared to operating efficiencies.
- In extreme cases, one might need to consider increasing the motor power and lowering the oil viscosity

5. Optional Vent Kits

FLEXBLOC™ (SI) worm gear units are designed to operate sealed or vented. As a standard the modular worm gear units are factory oil filled and supplied with oil plugs in the housing, making vent plugs optional. See user manual U14800 for vent locations.

NORD can supply an AUTOVENT™ or an open vent with each gear unit size. If a vent is desired the type must be specified at the time of order. Reducer vents are sealed with a transportation plug that must be removed prior to gear unit start-up.

Type	Transportation Seal	Installation	Part Number
AUTOVENT™	Included	Factory or Field site	66093510
Open Vent	None	Field Only	60693500
Open Vent	Included	Factory or Field site	22008004 (vent) 25308120 (gasket)

Unless noted by a seperate part number, vent kits include the housing gasket



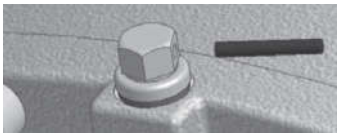

NOTICE

To prevent build-up of excessive pressure, sealed vents must be activated as shown prior to gear unit start-up. Excessive pressure may cause damage to internal components and cause leakage.

6. AUTOVENT™

The AUTOVENT™ helps prevent bearing and gear damage by behaving like a check valve to block the entry of foreign material and prevent lubrication contamination from dust particles, moisture and air-borne process chemicals. The breather opens at approximately 0.3-0.9 psi during operation and closes tightly as the gearbox cools. This option is perfect for humid conditions and wash-down environments, helping to maintain proper oil cleanliness, while reducing foaming and oxidation.

7. Open Vent

A typical gearbox industry open vent option can also be supplied by NORD. This option allows free exchange of air and does not build-up any back pressure inside the gear unit. This option is ideal for many operating conditions where the geared product is used in relatively clean and moisture-free environment.

8. When to Use a Sealed or a Vented Unit

There are many conditions that should be considered when deciding whether to use a sealed or vented unit.

1. If the duty cycle is intermittent, the run times are short, and any build-up of internal pressure or temperature is relatively low, the sealed unit option may be used.
2. If running continuous and under moderate to high load conditions, worm gears can generate higher operating temperatures and a build-up of internal pressure. In these instances a vent is strongly recommended. Consult NORD if operation at high load conditions is required.
3. If running continuous at 4-pole electric motor speeds (1800 rpm at 60 Hz) or higher, then a vent option is usually recommended. Consult NORD if operation at higher speeds is required.
4. Radial shaft seals produce a hydrodynamic pumping action to help push lubricant back into the gear unit, causing a small amount of ingested air and a small pressure increase (1-2 psi) that does not normally require a reducer vent; however when combined with continuous operation under high load (Condition 2), additional operating pressures will result and a vent should be used.
5. When the environment is contaminated with water, dirt, or other objects that may be ingested into the breather, increased wear of bearings, gearing, and lubrication breakdown can result. In these instances the sealed option or an AUTOVENT™ should be considered.

9. Maximum Oil Sump Temperature Limit

To prevent reducer overheating, the reducer's maximum oil-sump temperature limit must not be exceeded for prolonged periods of operation.

Oil Type	Maximum Oil Temperature Limit	
	NORD	AGMA 9005-D94
Synthetic	105°C (220°F)	107°C (225°F)

IMPORTANT NOTE

Use caution when specifying gear reducers for high temperature service. If there is concern about exceeding the allowable safe operating temperatures, please consult NORD to discuss alternatives.

10. Oil Viscosity

The viscosity rating determines the operating oil's resistance to shear under load conditions. Some important viscosity considerations include the following:

- Lightly loaded gears require lower viscosity oils than highly loaded gears.
- Lower viscosity will provide thin oil film, lower friction, higher mechanical efficiency, and better heat removal conditions.
- Higher viscosity will provide thicker oil film, and better resistance to sliding wear, scuffing wear, and galling at high pressure.
- Higher operating temperatures will cause a reduction in viscosity and lower operating temperatures, cause an increase in viscosity or a thickening of the oil.

The standard oil-fill is considered acceptable for most applications. In certain situations an oil viscosity change may be beneficial.

- If the gear unit is exposed to frequent high load conditions. A higher viscosity oil will have a higher film thickness offering better overall resistance to oil shear, sliding wear and scuffing wear in gears and roller element bearings.
- An oil viscosity correction or lubrication change may improve the overall performance when operating the gear unit at very low or high ambient temperature conditions.

IMPORTANT NOTE

The user should consult with their primary lubrication supplier before considering changes in oil type or viscosity.

11. Viscosity Index

Viscosity index helps quantify the rate of oil viscosity change with respect to temperature changes. Oils with a reasonably high viscosity index tend to be more stable in a changing temperature environment. The ability of an oil to maintain a small viscosity differential over the operating range of the gearbox provides a more consistent lubricating film and better wear performance.

Synthetic oils typically have a higher viscosity index than mineral oils and polyglycol oils tend to have an exceptionally high viscosity index compared to other synthetic oils like polyalphaolefin or ester based products.

EXPANSION CHAMBERS INSTALLATION & MAINTENANCE MANUAL

DRIVESYSTEMS — RETAIN FOR FUTURE USE — U10830 - 1 of 3

Installation Instructions

Sometimes NORD requires the use of an oil expansion chamber when the motor or reducer input is mounted vertically. Consult your NORD catalog for additional information and application considerations.

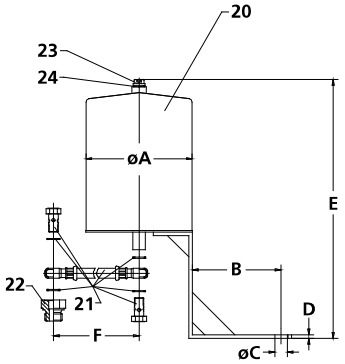

1. Secure the gear reducer in the proper mounting position for the application and remove the vent plug from the gear reducer. The hose assembly kit (21) will be fitted to the reducer using the housing port provided.
2. When using the larger 2.7 and 5.4 liter chambers, screw the adapter fitting (22) into the reducer housing port. Use all sealing gaskets provided.
3. Mount the overflow tank (20) at the highest location from the reducer, as permitted by the hose assembly kit (21). Typical mounting configurations are represented below. Use one of the input cover's mounting bolts, to mount the chamber support leg to the reducer.

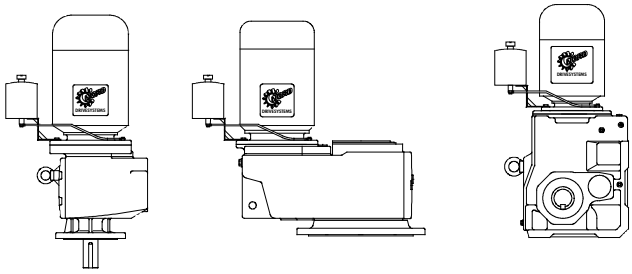

4. Be sure to use the proper fittings. Assemble one end of the vent-hose assembly (21) to bottom of the chamber and one-end to the reducer.
5. Secure the vent-plug (23) and gasket (24) that is supplied with the kit to the top of the expansion chamber.

NOTICE

Remove the protective "rubber element" from the supplied vent prior to use so that an open-vent is formed on top of the overflow tank. Avoid using a pressurized AUTOVENT™ breather on the overflow tank since this may create an undesired pressure-vacuum in the overflow tank.

Expansion Chamber Kit Dimensions & Parts List

Kit Part Number: 28390390 - 0.7 Liter Oil Expansion Chamber

Kit P/N	Ø A	B	Ø C	D	E	F	Units
28390390	3.94	1.97	0.53	0.20	8.50	19.69	inch
(0.7 Liter)	100	50	13.5	5	216	500	mm

Item	Part Number	Description
20	28300390	Overflow Tank - 0.7 Liter
21	28310020	Flexible Vent Hose Assembly - Includes: Hose, metal gaskets & 2 Hollow Bolts (1 Bolt. - M12 X 1.5 and 1 Pc. - G1/4)
22	None	Adapter Fitting
23	22012004	Normal Style Vent Plug (M12 X 1.5, DIN 910)
24	25312150	Vent Plug Gasket (12 X 15.5 X 1.5)

Kit Part Number: 28390400 - 2.7 Liter Oil Expansion Chamber

Kit P/N	Ø A	B	Ø C	D	E	F	Units
28390400	5.91	4.92	0.69	0.20	15.22	27.56	inch
(2.7 Liter)	150	125	17.5	5	386.5	700	mm

Item	Part Number	Description
20	28300400	Overflow Tank - 2.7 Liter
21	28310030	Flexible Vent Hose Assy - Includes: Hose, metal gaskets & 2 Hollow Bolts (2 Pcs. - G1/4)
22	22024030	Adapter Fitting (M24 X 1.5 to G1/4)
23	22012004	Normal Style Vent Plug (M12 X 1.5, DIN 910)
24	25312150	Vent Plug Gasket (12 X 15.5 X 1.5)

Kit Part Number: 28390410 - 5.4 Liter Oil Expansion Chamber

Kit P/N	Ø A	B	Ø C	D	E	F	Units
28390410	7.09	3.54	0.69	0.20	15.18	31.50	inch
(5.4 Liter)	180	90	17.5	5	385.5	800	mm

Item	Part Number	Description
20	28300410	Overflow Tank - 5.4 Liter
21	28310040	Flexible Vent Hose Assy - Includes: Hose, metal gaskets & 2 Hollow Bolts (2 Pcs. - G1/4)
22	22030030	Adapter Fitting (M30 X 1.5 to G1/4)
23	22012004	Normal Style Vent Plug (M12 X 1.5, DIN 910)
24	25312150	Vent Plug Gasket (12 X 15.5 X 1.5)

Please see page 2 for gearbox compatability

NORD Gear Limited
Toll Free in Canada: 800.668.4378

NORD Gear Corporation
Toll Free in the United States: 888.314.6673

Expansion Chamber Compatability Chart

Helical In-line	NORDBLOC™	NORDBLOC.1™	Clincher™	Helical-Bevel	Part Number	[lb]
SK 42/43 SK 52/53 SK 63	SK472/473 SK572/573 SK672/673 SK772/773 SK872/873 SK972/973	SK572.1/573.1* SK672.1/673.1* SK772.1/773.1 SK872.1/873.1 SK972.1/973.1	SK 4282/4382 SK 5282/5382 SK 6382	SK 9042.1/9043.1 SK 9052.1/9053.1	28390390	11.0
SK 62 SK 72/73			SK 6282 SK 7282/7382	SK 9072.1 SK 9082.1	28390400	13.2
SK 82/83 SK 92/93 SK 102/103			SK 8282/8382	SK 9086.1 SK 9092.1 SK 9096.1	28390410	15.4

* Need to additionally order part #28390380 which is sub-assembly shown below.

Expansion Chamber Compatability Chart

Helical Worm	Two-Stage Helical Bevel	NORDBLOC.1™	Clincher™	Part Number
SK 02040.1	SK 920072.1 SK 92072.1	SK 072.1 / 071.1 SK 172.1	N/A	28390840**
N/A	SK 92172.1	SK 171.1 SK 372.1	SK 0182.1 SK 0282.1 SK 1382.1	28390850**

* See page 3 for assembly information

Sub-Assembly P/N 28390380 for NORDBLOC®.1 gear units with M10x1 air vent.

❶	❷	❸	❹
			
1x DIN 7643 M10x1 283 00380	1x DIN 7603A Cu 10x16x1 253 10166	1x Ring 10x14x5 283 00370	1xDIN 9021 ø8,4 227 10840

Assembly of the expansion unit at the gear unit. Types SK 572.1/573.1, SK 672.1/673.1



Vent Hose Sub-Assembly

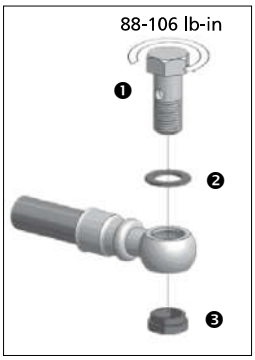

❹ For motor sizes 63, 71, 80, 90, 100 & 112

• Motor attachment bolt

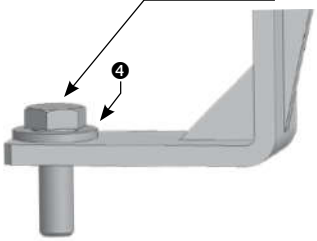

Motor Sizes 63, 71 & 80:
Assembly vent-hose to port as shown.

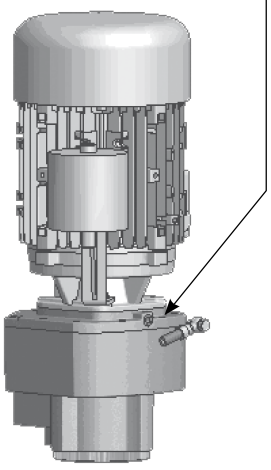

Motor Sizes 90,100 & 112:
Assembly vent-hose to port as shown.

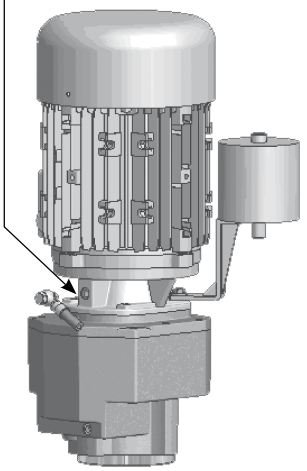

Assembly instruction for 0.25-liter oil expansion chamber (OA)

1. After fitting the drive in the find operating position remove vent-plug of the drive.
2. Assemble the expansion unit (suggestions for position listed below).

Attention: Terminal box position for the construction M4 in position 2 is not possible.

The expansion tank should be screwed straight, parallel to the motor axis.

Attention: On ATEX gearboxes, screw the pressure vent plug M10x1.0, into the expansion unit.

Designation	0 A	0 B
Vent plug M10x1.0 with oil seal	X	X
Expansion tank (l)	0.25	0.25
Pipe 6 mm	PR 06	PR 06
Gear connection	M8x1	M10x1
Part number	28390840	28390850

HELICAL & BEVEL REDUCER LUBRICATION TYPES

Lubrication Tables – Helical and Bevel Gear Units

Standard Oil Lubricants

ISO Viscosity	Oil Type	Ambient Temperature Range	Manufacturer Brand/Type	Notes
VG220	MIN-EP	0 to 40°C (32 to 104°)	Mobilgear 600XP220	♦❶
	PAO-EP	-35 to 60°C (-31 to 140°F)	Mobil SHC Gear 220	♦❷
	FG	-5 to 40°C (23 to 104°F)	Fuchs FM220	♦

Optional Oil Lubricants

ISO Viscosity	Oil Type	Ambient Temperature Range	Manufacturer Brand/Type	Notes
VG460	PAO-EP	-35 to 80°C (-31 to 176°F)	Mobil SHC Gear 460	-
	FG-PAO	-35 to 80°C (-31 to 176°F)	Mobil SHC Cibus 460	-
VG220	FG-PAO	-35 to 60°C (-31 to 140°F)	Mobil SHC Cibus 220	S
VG150	PAO-EP	-35 to 25°C (-31 to 77°F)	Mobil SHC Gear 150	-

Grease Options (applied to greased bearings and seal cavities)

NLGI Grade	Grease Thickener	Grease Base Oil	Ambient Temperature Range	Manufacturer Brand/Type	Notes
NLGI 2	Li-Complex	MIN	-30 to 60°C (-22 to 140°F)	Mobil Grease XHP222	♦❶
	Li-Complex	PAO	-40 to 80°C (-40 to 176°F)	Mobil / Mobilith SHC 220	♦❷
	Polyurea	FG-PAO	-30 to 80°C (-22 to 176°F)	Mobil SHC Polyrex 222	♦

♦ Stocked Lubricants

❶ Standard product on serviceable gear units

❷ Standard product on maintenance free gear units

IMPORTANT NOTE

- The "Ambient Temperature" is intended to be an operation guideline based upon the typical properties of all the lubricant. The viscosity and other properties of the lubricant change based upon load, speed, ambient conditions, and reducer operating temperatures. The user should consult with their lubrication supplier & NORD gear before considering changes in oil type or viscosity.
- To prevent reducer overheating, observe the maximum operating oil temperature limits:
  Mineral Oil: 85 °C (185 °F).
  Synthetic Oil: 105 °C (225 °F).
- In the following instances, please consult NORD for specific recommendations:
  - √ Gear units will operate in high ambient temperature conditions exceeding 40 °C (104 °F).
  - √ Gear units will operate in cold ambient temperature conditions approaching 0 °C (32 °F) or lower.
  - √ Lower than an ISO VG100 viscosity oil is being considered for a cold-temperature service.
  - √ Fluid grease is required for lubricating the gear unit.
- Observe the general lubrication guidelines outlined in user manual U10750.

Oil Formulation Codes

MIN-EP - Mineral Oil with EP Additive
PAO-EP - Synthetic Polyalphaolefin Oil with EP Additive
PAO - Synthetic Polyalphaolefin Oil
PG - Synthetic Polyglycol Oil
FG - Food-Grade Oil
FG-PAO - Food-Grade, Synthetic Poyalphaolefin Oil
FG-PG - Food-Grade, Synthetic Polyglycol Oil

Lubrication Notes

- Avoid using (EP) gear oils in worm gears that contain sulfur-phosphorous chemistries, as these additives can react adversely with bronze worm gears and accelerate wear.
- Food grade lubricants must be in compliance with FDA 212 CFR 178.3570 and qualify as a NSF-H1 lubricant. Please consult with lubrication manufacturer for more information.
- When making a lubrication change, check with the lubrication supplier to assure compatibility and to obtain recommended cleaning or flushing procedures.
- Do not to mix different oils with different additive packages or different base oil formulation types. Polyglycol (PG) oils are not miscible with other oil types and should never be mixed with mineral oil or polyalphaolefin (PAO) synthetic oil.

NORD Gear Limited
Toll Free in Canada: 800.668.4378

NORD Gear Corporation
Toll Free in the United States: 888.314.6673

HELICAL & BEVEL REDUCER LUBRICATION TYPES

Oil Cross-reference Chart

ISO Viscosity	Oil Type	Ambient Temperature Range	Mobil	Shell	Castrol	FUCHS	KLÜBER LUBRICATION
VG150	MIN-EP	0 to 25°C (32 to 77°F)	Mobilgear 600XP150	Omala S2 G 150	Alpha SP150	Renolin EP150	Klüberoil GEM 1-150N
	PAO-EP	-30 to 25 °C (-22 to 77 °F)	Mobil SHC Gear 150	Omala S4 GX 150	Alphasyn EP150	Gearmaster SYN150/NA	Klübersynth EG 4-150
	PAO	-30 to 25°C (-22 to 77°F)	Mobil SHC629	Morlina S4 B 150	Alphasyn T150	N/A	Klübersynth GEM 4-150N
	PG	-25 to 25°C (-13 to 77°F)	Mobil Glygoyle 150	Omala S4 WE 150	Alphasyn PG150	Renolin PG150	Klübersynth GH 6-150
	FG	0 to 25°C (32 to 77°F)	Mobil DTE FM 150	N/A	N/A	N/A	N/A
	FG-PAO	-15 to 25°C (5 to 77°F)	Mobil SHC Cibus 150	N/A	N/A	Cassida GL150	Klüberoil 4 UH 1-150N
	FG-PG	-25 to 25°C (-13 to 77°F)	Mobil Glygoyle 150	N/A	N/A	N/A	Klübersynth UH1 6-150
VG220	MIN-EP	0 to 40°C (32 to 104°)	Mobilgear 600XP220	Omala S2 G 220	Alpha SP220	Renolin EP220	Klüberoil GEM 1-220N
	PAO-EP	-30 to 60 °C (-22 to 140 °F)	Mobil SHC Gear 220	Omala S4 GX 220	Alphasyn EP220	Gearmaster SYN220/NA	Klübersynth EG 4-220
	PAO	-30 to 60°C (-22 to 140°F)	Mobil SHC630	Morlina S4 B 220	Alphasyn T220	N/A	Klübersynth GEM 4-220N
	PG	-25 to 60°C (-13 to 140°F)	Mobil Glygoyle 220	Omala S4 WE 220	Alphasyn PG220	Renolin PG220	Klübersynth GH 6-220
	FG	0 to 40°C (32 to 104°F)	Mobil DTE FM 220	N/A	N/A	Fuchs FM220	N/A
	FG-PAO	-25 to 60°C (-13 to 140°F)	Mobil SHC Cibus 220	N/A	N/A	Cassida GL220	Klüberoil 4 UH 1-220N
	FG-PG	-25 to 60°C (-13 to 140°F)	Mobil Glygoyle 220	N/A	N/A	Cassida WG220	Klübersynth UH1 6-220
VG460	MIN-EP	0 to 40°C (32 to 104°F)	Mobilgear 600XP460	Omala S2 G 460	Alpha SP460	Renolin EP460	Klüberoil GEM 1-460N
	PAO-EP	-20 to 80°C (-4 to 176°F)	Mobil SHC Gear 460	Omala S4 GX 460	Alphasyn EP460	Gearmaster SYN460/NA	Klübersynth EG 4-460
	PAO	-20 to 80°C (-4 to 176°F)	Mobil SHC 634	Morlina S4 B 460	Alphasyn T460	N/A	Klübersynth GEM 4-460N
	PG	-20 to 80°C (-4 to 176°F)	Mobil Glygoyle 460	Omala S4 WE 60	Alphasyn PG460	N/A	Klübersynth GH 6-460
	FG	0 to 40°C (32 to 104°F)	Mobil DTE FM460	N/A	N/A	Fuchs FM460	N/A
	FG-PAO	-20 to 80°C (-4 to 176°F)	Mobil SHC Cibus 460	N/A	N/A	Cassida GL460	Klüberoil 4 UH 1-460N
	FG-PG	-20 to 80°C (-4 to 176°F)	Mobil Glygoyle 460	N/A	N/A	Cassida WG460	Klübersynth UH1 6-460

Low-end service temperature limit may vary for a specific lubricant; Please also see the important notes on Page 1.

CONVEYOR DRIVE LUBRICATION TYPES

Lubrication Tables – SK 9055 and SK 9155 Gear Units

Standard Oil Lubricants

ISO Viscosity	Oil Type	Ambient Temperature Range	Manufacturer Brand/Type	Notes
VG220	MIN-EP	0 to 40°C (32 to 104°)	Mobilgear 600XP220	♦❶
	PAO-EP	-35 to 60°C (-31 to 140°F)	Mobil SHC Gear 220	♦❷
	FG	-5 to 40°C (23 to 104°F)	Fuchs FM220	♦

Optional Oil Lubricants

ISO Viscosity	Oil Type	Ambient Temperature Range	Manufacturer Brand/Type	Notes
VG460	PAO-EP	-35 to 80°C (-31 to 176°F)	Mobil SHC Gear 460	-
	FG-PAO	-35 to 80°C (-31 to 176°F)	Mobil SHC Cibus 460	-
VG220	FG-PAO	-35 to 60°C (-31 to 140°F)	Mobil SHC Cibus 220	-
VG150	PAO-EP	-35 to 25°C (-31 to 77°F)	Mobil SHC Gear 150	-

Grease Options (applied to greased bearings and seal cavities)

NLGI Grade	Grease Thickener	Grease Base Oil	Ambient Temperature Range	Manufacturer Brand/Type	Notes
NLGI 2	Li-Complex	MIN	-30 to 60°C (-22 to 140°F)	Mobil Grease XHP222	♦❶
	Li-Complex	PAO	-40 to 80°C (-40 to 176°F)	Mobil / Mobilith SHC 220	♦❷
	Polyurea	FG-PAO	-30 to 80°C (-22 to 176°F)	Mobil SHC Polyrex 222	♦

♦ Stocked Lubricants

❶ Standard product on serviceable gear units

❷ Standard product on maintenance free gear units

IMPORTANT NOTE

- The "Ambient Temperature" is intended to be an operation guideline based upon the typical properties of all the lubricant. The viscosity and other properties of the lubricant change based upon load, speed, ambient conditions, and reducer operating temperatures. The user should consult with their lubrication supplier & NORD gear before considering changes in oil type or viscosity.
- To prevent reducer overheating, observe the maximum operating oil temperature limits:
  Mineral Oil: 85 °C (185 °F).
  Synthetic Oil: 105 °C (225 °F).
- In the following instances, please consult NORD for specific recommendations:
  - √ Gear units will operate in high ambient temperature conditions exceeding 40 °C (104 °F).
  - √ Gear units will operate in cold ambient temperature conditions approaching 0 °C (32 °F) or lower.
  - √ Lower than an ISO VG100 viscosity oil is being considered for a cold-temperature service.
  - √ Fluid grease is required for lubricating the gear unit.
- Observe the general lubrication guidelines outlined in user manual U10750.

Oil Formulation Codes

MIN-EP - Mineral Oil with EP Additive
PAO-EP - Synthetic Polyalphaolefin Oil with EP Additive
PAO - Synthetic Polyalphaolefin Oil
PG - Synthetic Polyglycol Oil
FG - Food-Grade Oil
FG-PAO - Food-Grade, Synthetic Poyalphaolefin Oil
FG-PG - Food-Grade, Synthetic Polyglycol Oil

Lubrication Notes

- Avoid using (EP) gear oils in worm gears that contain sulfur-phosphorous chemistries, as these additives can react adversely with bronze worm gears and accelerate wear.
- Food grade lubricants must be in compliance with FDA 212 CFR 178.3570 and qualify as a NSF-H1 lubricant. Please consult with lubrication manufacturer for more information.
- When making a lubrication change, check with the lubrication supplier to assure compatibility and to obtain recommended cleaning or flushing procedures.
- Do not to mix different oils with different additive packages or different base oil formulation types. Polyglycol (PG) oils are not miscible with other oil types and should never be mixed with mineral oil or polyalphaolefin (PAO) synthetic oil.

NORD Gear Limited
Toll Free in Canada: 800.668.4378

NORD Gear Corporation
Toll Free in the United States: 888.314.6673

CONVEYOR DRIVE LUBRICATION TYPES

Oil Cross-reference Chart

ISO Viscosity	Oil Type	Ambient Temperature Range	Mobil	Shell	Castrol	FUCHS	KLÜBER LUBRICATION
VG150	MIN-EP	0 to 25°C (32 to 77°F)	Mobilgear 600XP150	Omala S2 G 150	Alpha SP150	Renolin EP150	Klüberoil GEM 1-150N
	PAO-EP	-30 to 25 °C (-22 to 77 °F)	Mobil SHC Gear150	Omala S4 GX 150	Alphasyn EP150	Gearmaster SYN150/NA	Klübersynth EG 4-150
	PAO	-30 to 25°C (-22 to 77°F)	Mobil SHC629	Morlina S4 B 150	Alphasyn T150	N/A	Klübersynth GEM 4-150N
	PG	-25 to 25°C (-13 to 77°F)	Mobil Glygoyle 150	Omala S4 WE 150	Alphasyn PG150	Renolin PG150	Klübersynth GH 6-150
	FG	0 to 25°C (32 to 77°F)	Mobil DTE FM 150	N/A	N/A	N/A	N/A
	FG-PAO	-15 to 25°C (5 to 77°F)	Mobil SHC Cibus 150	N/A	N/A	Cassida GL150	Klüberoil 4 UH 1-150N
	FG-PG	-25 to 25°C (-13 to 77°F)	Mobil Glygoyle 150	N/A	N/A	N/A	Klübersynth UH1 6-150
VG220	MIN-EP	0 to 40°C (32 to 104°)	Mobilgear 600XP220	Omala S2 G 220	Alpha SP220	Renolin EP220	Klüberoil GEM 1-220N
	PAO-EP	-30 to 60 °C (-22 to 140 °F)	Mobil SHC Gear 220	Omala S4 GX 220	Alphasyn EP220	Gearmaster SYN220/NA	Klübersynth EG 4-220
	PAO	-30 to 60°C (-22 to 140°F)	Mobil SHC630	Morlina S4 B 220	Alphasyn T220	N/A	Klübersynth GEM 4-220N
	PG	-25 to 60°C (-13 to 140°F)	Mobil Glygoyle 220	Omala S4 WE 220	Alphasyn PG220	Renolin PG220	Klübersynth GH 6-220
	FG	0 to 40°C (32 to 104°F)	Mobil DTE FM 220	N/A	N/A	Fuchs FM220	N/A
	FG-PAO	-25 to 60°C (-13 to 140°F)	Mobil SHC Cibus 220	N/A	N/A	Cassida GL220	Klüberoil 4 UH 1-220N
	FG-PG	-25 to 60°C (-13 to 140°F)	Mobil Glygoyle 220	N/A	N/A	Cassida WG220	Klübersynth UH1 6-220
VG460	MIN-EP	0 to 40°C (32 to 104°F)	Mobilgear 600XP460	Omala S2 G 460	Alpha SP460	Renolin EP460	Klüberoil GEM 1-460N
	PAO-EP	-20 to 80°C (-4 to 176°F)	Mobil SHC Gear 460	Omala S4 GX 460	Alphasyn EP460	Gearmaster SYN460/NA	Klübersynth EG 4-460
	PAO	-20 to 80°C (-4 to 176°F)	Mobil SHC 634	Morlina S4 B 460	Alphasyn T460	N/A	Klübersynth GEM 4-460N
	PG	-20 to 80°C (-4 to 176°F)	Mobil Glygoyle 460	Omala S4 WE 60	Alphasyn PG460	N/A	Klübersynth GH 6-460
	FG	0 to 40°C (32 to 104°F)	Mobil DTE FM460	N/A	N/A	Fuchs FM460	N/A
	FG-PAO	-20 to 80°C (-4 to 176°F)	Mobil SHC Cibus 460	N/A	N/A	Cassida GL460	Klüberoil 4 UH 1-460N
	FG-PG	-20 to 80°C (-4 to 176°F)	Mobil Glygoyle 460	N/A	N/A	Cassida WG460	Klübersynth UH1 6-460

Low-end service temperature limit may vary for a specific lubricant; Please also see the important notes on Page 1.

HELICAL-WORM REDUCER LUBRICATION TYPES

Lubrication Tables – Helical Worm Gear Units

Standard Oil Lubricants

ISO Viscosity	Oil Type	Ambient Temperature Range	Manufacturer Brand/Type	Notes
VG680	PAO	0 to 60°C (32 to 140°F)	Mobil SHC636	♦

Optional Oil Lubricants

ISO Viscosity	Oil Type	Ambient Temperature Range	Manufacturer Brand/Type	Notes
VG460	PAO	0 to50°C (32 to 122°F)	Mobil SHC 634	-
	FG-PAO	0 to50°C (32 to 122°F)	Mobil SHC Cibus 460	-

Grease Options (applied to greased bearings and seal cavities)

NLGI Grade	Grease Thickener	Grease Base Oil	Ambient Temperature Range	Manufacturer Brand/Type	Notes
NLGI 2	Li-Complex	PAO	-40 to 80°C (-40 to 176°F)	Mobil / Mobilith SHC 220	♦
	Polyurea	FG-PAO	-30 to 80°C (-22 to 176°F)	Mobil SHC Polyrex 222	♦

♦ **Stocked Lubricants**

IMPORTANT NOTE

- The "Ambient Temperature" is intended to be an operation guideline based upon the typical properties of all the lubricant. The viscosity and other properties of the lubricant change based upon load, speed, ambient conditions, and reducer operating temperatures. The user should consult with their lubrication supplier & NORD Gear before considering changes in oil type or viscosity.
- To prevent reducer overheating, observe the maximum operating oil temperature limits:

  Synthetic Oil: 105 °C (225 °F).
- In the following instances, please consult NORD for specific recommendations:

√ Gear units will operate in high ambient temperature conditions exceeding 40 °C (104 °F).
√ Gear units will operate in cold ambient temperature conditions approaching 0 °C (32 °F) or lower.
√ Lower than an ISO VG100 viscosity oil is being considered for a cold-temperature service.
√ Fluid grease is required for lubricating the gear unit.

- Observe the general lubrication guidelines outlined in user manual U10770.

Oil Formulation Codes

PAO - Synthetic Polyalphaolefin Oil
PG - Synthetic Polyglycol Oil
FG-PAO - Food-Grade, Synthetic Poyalphaolefin Oil
FG-PG - Food-Grade, Synthetic Polyglycol Oil

Lubrication Notes

- Avoid using (EP) gear oils in worm gears that contain sulfur-phosphorous chemistries, as these additives can react adversely with bronze worm gears and accelerate wear.
- Food grade lubricants must be in compliance with FDA 212 CFR 178.3570 and qualify as a NSF-H1 lubricant. Please consult with lubrication manufacturer for more information.
- When making a lubrication change, check with the lubrication supplier to assure compatibility and to obtain recommended cleaning or flushing procedures.
- Do not to mix different oils with different additive packages or different base oil formulation types. Polyglycol (PG) oils are not miscible with other oil types and should never be mixed with mineral oil or polyalphaolefin (PAO) synthetic oil.

HELICAL-WORM REDUCER LUBRICATION TYPES

Oil Cross-reference Chart

ISO Viscosity	Oil Type	Ambient Temperature Range	Mobil	Shell	Castrol	FUCHS	KLÜBER LUBRICATION
VG 100	PAO	-35 to 25°C (-31 to 77°F)	Mobil SHC627	Morlina S4 B 100	N/A	N/A	Klübersynth GEM 4-100N
	PG	-25 to 25°C (-13 to 77°F)	Mobil Glygoyle 100	N/A	N/A	N/A	Klübersynth GH 6-100
	FG-PAO	-35 to 25°C (-31 to 77°F)	Mobil SHC Cibus 100	N/A	N/A	N/A	Klüberoil 4 UH 1-100N
	FG-PG	-25 to 25°C (-13 to 77°F)	Mobil Glygoyle 100	N/A	N/A	N/A	Klübersynth UH1 6-100
VG150	PAO	-35 to 25°C (-31 to 77°F)	Mobil SHC629	Morlina S4 B 150	Alphasyn T150	N/A	Klübersynth GEM 4-150N
	PG	-25 to 25°C (-13 to 77°F)	Mobil Glygoyle 150	Omala S4 WE 150	Alphasyn PG150	Renolin PG150	Klübersynth GH 6-150
	FG-PAO	-15 to 25°C (5 to 77°F)	Mobil SHC Cibus 150	N/A	N/A	Cassida GL150	Klüberoil 4 UH 1-150N
	FG-PG	-25 to 25°C (-13 to 77°F)	Mobil Glygoyle 150	N/A	N/A	N/A	Klübersynth UH1 6-150
VG220	PAO	-15 to 40°C (5 to 104°F)	Mobil SHC630	Morlina S4 B 220	Alphasyn T220	N/A	Klübersynth GEM 4-220N
	PG	-25 to 40°C (-13 to 104°F)	Mobil Glygoyle 220	Omala S4 WE 220	Alphasyn PG220	Renolin PG220	Klübersynth GH 6-220
	FG-PAO	-25 to 40°C (-13 to 104°F)	Mobil SHC Cibus 220	N/A	N/A	Cassida GL220	Klüberoil 4 UH 1-220N
	FG-PG	-25 to 40°C (-13 to 104°F)	Mobil Glygoyle 220	N/A	N/A	Cassida WG220	Klübersynth UH1 6-220
VG460	PAO	0 to50°C (32 to 122°F)	Mobil SHC 634	Morlina S4 B 460	Alphasyn T460	N/A	Klübersynth GEM 4-460N
	PG	0 to50°C (32 to 122°F)	Mobil Glygoyle 460	Omala S4 WE 60	Alphasyn PG460	N/A	Klübersynth GH 6-460
	FG-PAO	0 to50°C (32 to 122°F)	Mobil SHC Cibus 460	N/A	N/A	Cassida GL460	Klüberoil 4 UH 1-460N
	FG-PG	0 to50°C (32 to 122°F)	Mobil Glygoyle 460	N/A	N/A	Cassida WG460	Klübersynth UH1 6-460
VG680	PAO	0 to 60°C (32 to 140°F)	Mobil SHC636	Morlina S4 B 680	N/A	N/A	Klübersynth GEM 4-680N
	PG	0 to 60°C (32 to 140°F)	Mobil Glygoyle 680	Omala S4 WE 680	N/A	N/A	Klübersynth GH 6-680
	FG-PAO	0 to 60°C (32 to 140°F)	N/A	N/A	N/A	Cassida GL680	Klüberoil 4 UH1-680N
	FG-PG	0 to 60°C (32 to 140°F)	Mobil Glygoyle 680	N/A	N/A	Cassida WG680	*Klübersynth UH1 6-680*

Low-end service temperature limit may vary for a specific lubricant; Please also see the important notes on Page 1.

MINICASE® (SM SERIES) WORM GEAR LUBRICATION TYPES

Lubrication Tables – MINICASE® (SM series) Worm Gear Units

Standard Oil Lubricants

ISO Viscosity	Oil Type	Ambient Temperature Range	Manufacturer Brand/Type	Notes
VG680	PG	-20 to 40°C (-4 to 104°F)	Klübersynth GH 6-680	♦

Optional Oil Lubricants

ISO Viscosity	Oil Type	Ambient Temperature Range	Manufacturer Brand/Type	Notes
VG680	FG-PG	-25 to 80°C (-13 to 176°F)	Klübersynth UH1 6-680	♦

Grease Options (applied to greased bearings and seal cavities)

NLGI Grade	Grease Thickener	Grease Base Oil	Ambient Temperature Range	Manufacturer Brand/Type	Notes
NLGI 2	Li-Complex	PAO	-25 to 80°C (-13 to 176°F)	Kluber / Petamo GHY133N	♦
	Aluminum	FG	-25 to 40°C (-13 to 104°F)	Kluber / Klubersynth UH1 14-151	♦

♦ **Stocked Lubricants**

IMPORTANT NOTE

- Observe the general lubrication guidelines in User Manual U17900.
- Ambient temperature range is a guideline only. The allowed operating temperature range for the gear unit is dependent upon assembly components used, their individual temperature limits, and the actual operating conditions.
- The selected oil type and viscosity is considered appropriate for most applications utilizing the specified NORD gear unit type. Different oil types or viscosity grades may be recommended if the gear unit is exposed to frequent high load conditions or operating under extreme low or high ambient temperature conditions.
- To prevent reducer overheating, observe the maximum operating oil temperature limits:
  Synthetic oil: 105 °C (225 °F).
- Consult NORD for recommendations in the following instances:
  √ The gear unit is exposed to frequent high load conditions.
  √ Ambient temperature conditions exceed 40 °C (104 °F) or approach 0 °C (32 °F) or lower.
  √ Fluid grease is being considered or specified for lubricating the gear unit.
  √ Lower than an ISO VG100 viscosity oil is being considered for a cold-temperature service.

Oil Formulation Codes

PAO - Synthetic Polyalphaolefin Oil
PG - Synthetic Polyglycol Oil
FG-PAO - Food-Grade, Synthetic Poyalphaolefin Oil
FG-PG - Food-Grade, Synthetic Polyglycol Oil

NOTICE

- Avoid using (EP) gear oils in worm gears that contain sulfur-phosphorous chemistries, as these additives can react adversely with bronze worm gears and accelerate wear.
- Food grade lubricants must be in compliance with FDA 212 CFR 178.3570 and qualify as a NSF-H1 lubricant. Please consult with lubrication manufacturer for more information.
- When making a lubrication change, check with the lubrication supplier to assure compatibility and to obtain recommended cleaning or flushing procedures.
- Do not to mix different oils with different additive packages or different base oil formulation types. Polyglycol (PG) oils are not miscible with other oil types and should never be mixed with mineral or polyaolphaolefin (PAO) oils.

MINICASE® (SM SERIES) WORM GEAR LUBRICATION TYPES

Oil Cross-reference Chart

ISO Viscosity	Oil Type	Ambient Temperature Range	Mobil	Shell	Castrol	FUCHS	KLÜBER LUBRICATION
VG 100	PAO	-35 to 25°C (-31 to 77°F)	Mobil SHC627	Morlina S4 B 100	N/A	N/A	Klübersynth GEM 4-100N
	PG	-25 to 25°C (-13 to 77°F)	Mobil Glygoyle 100	N/A	N/A	N/A	Klübersynth GH 6-100
	FG-PAO	-30 to 25°C (-22 to 77°F)	Mobil SHC Cibus 100	N/A	N/A	N/A	Klüberoil 4 UH 1-100N
	FG-PG	-25 to 25°C (-13 to 77°F)	Mobil Glygoyle 100	N/A	N/A	N/A	Klübersynth UH1 6-100
VG150	PAO	-35 to 25°C (-31 to 77°F)	Mobil SHC629	Morlina S4 B 150	Alphasyn T150	N/A	Klübersynth GEM 4-150N
	PG	-25 to 25°C (-13 to 77°F)	Mobil Glygoyle 150	Omala S4 WE 150	Alphasyn PG150	Renolin PG150	Klübersynth GH 6-150
	FG-PAO	-15 to 25°C (5 to 77°F)	Mobil SHC Cibus 150	N/A	N/A	Cassida GL150	Klüberoil 4 UH 1-150N
	FG-PG	-25 to 25°C (-13 to 77°F)	Mobil Glygoyle 150	N/A	N/A	N/A	Klübersynth UH1 6-150
VG220	PAO	-35 to 40°C (-31 to 104°F)	Mobil SHC630	Morlina S4 B 220	Alphasyn T220	N/A	Klübersynth GEM 4-220N
	PG	-25 to 40°C (-13 to 104°F)	Mobil Glygoyle 220	Omala S4 WE 220	Alphasyn PG220	Renolin PG220	Klübersynth GH 6-220
	FG-PAO	-25 to 40°C (-13 to 104°F)	Mobil SHC Cibus 220	N/A	N/A	Cassida GL220	Klüberoil 4 UH 1-220N
	FG-PG	-25 to 40°C (-13 to 104°F)	Mobil Glygoyle 220	N/A	N/A	Cassida WG220	Klübersynth UH1 6-220
VG460	PAO	-20 to 40°C (-4 to 104°F)	Mobil SHC 634	Morlina S4 B 460	Alphasyn T460	N/A	Klübersynth GEM 4-460N
	PG	-20 to 40°C (-4 to 104°F)	Mobil Glygoyle 460	Omala S4 WE 60	Alphasyn PG460	N/A	Klübersynth GH 6-460
	FG-PAO	-5 to 40°C (23 to 104°F)	Mobil SHC Cibus 460	N/A	N/A	Cassida GL460	Klüberoil 4 UH 1-460N
	FG-PG	-5 to 40°C (23 to 104°F)	Mobil Glygoyle 460	N/A	N/A	Cassida WG460	Klübersynth UH1 6-460
VG680	PAO	-20 to 40°C (-4 to 104°F)	Mobil SHC636	Morlina S4 B 680	N/A	N/A	Klübersynth GEM 4-680N
	PG	-20 to 40°C (-4 to 104°F)	Mobil Glygoyle 680	Omala S4 WE 680	N/A	N/A	Klübersynth GH 6-680
	FG-PAO	-5 to 40°C (23 to 104°F)	N/A	N/A	N/A	Cassida GL680	Klüberoil 4 UH1-680N
	FG-PG	-25 to 80°C (-13 to 176°F)	Mobil Glygoyle 680	N/A	N/A	Cassida WG680	*Klübersynth UH1 6-680*

Low-end service temperature limit may vary for a specific lubricant; Please also see the important notes on Page 1.

NORD Gear Limited
Toll Free in Canada: 800.668.4378

NORD Gear Corporation
Toll Free in the United States: 888.314.6673

MINICASE® (SMI/SMID) WORM GEAR LUBRICATION TYPES

Lubrication Tables – MINICASE® (SMI/SMID series) Worm Gear Units

Standard Oil Lubricants

ISO Viscosity	Oil Type	Ambient Temperature Range	Manufacturer Brand/Type	Notes
VG680	PG	-20 to 40°C (-4 to 104°F)	Klübersynth GH 6-680	♦

Optional Oil Lubricants

ISO Viscosity	Oil Type	Ambient Temperature Range	Manufacturer Brand/Type	Notes
VG680	FG-PG	-25 to 80°C (-13 to 176°F)	Klübersynth UH1 6-680	♦

Grease Options (applied to greased bearings and seal cavities)

NLGI Grade	Grease Thickener	Grease Base Oil	Ambient Temperature Range	Manufacturer Brand/Type	Notes
NLGI 2	Li-Complex	PAO	-25 to 80°C (-13 to 176°F)	Kluber / Petamo GHY133N	♦
	Aluminum	FG	-25 to 40°C (-13 to 104°F)	Kluber / Klubersynth UH1 14-151	♦

♦ Stocked Lubricants

IMPORTANT NOTE

- Observe the general lubrication guidelines in User Manual U10800.
- Ambient temperature range is a guideline only. The allowed operating temperature range for the gear unit is dependent upon assembly components used, their individual temperature limits, and the actual operating conditions.
- The selected oil type and viscosity is considered appropriate for most applications utilizing the specified NORD gear unit type. Different oil types or viscosity grades may be recommended if the gear unit is exposed to frequent high load conditions or operating under extreme low or high ambient temperature conditions.
- To prevent reducer overheating, observe the maximum operating oil temperature limits:
  Synthetic oil: 105 °C (225 °F).
- Consult NORD for recommendations in the following instances:
  √ The gear unit is exposed to frequent high load conditions.
  √ Ambient temperature conditions exceed 40 °C (104 °F) or approach 0 °C (32 °F) or lower.
  √ Fluid grease is being considered or specified for lubricating the gear unit.
  √ Lower than an ISO VG100 viscosity oil is being considered for a cold-temperature service.

Oil Formulation Codes

PAO - Synthetic Polyalphaolefin Oil
PG - Synthetic Polyglycol Oil
FG-PAO - Food-Grade, Synthetic Poyalphaolefin Oil
FG-PG - Food-Grade, Synthetic Polyglycol Oil

NOTICE

- Avoid using (EP) gear oils in worm gears that contain sulfur-phosphorous chemistries, as these additives can react adversely with bronze worm gears and accelerate wear.
- Food grade lubricants must be in compliance with FDA 212 CFR 178.3570 and qualify as a NSF-H1 lubricant. Please consult with lubrication manufacturer for more information.
- When making a lubrication change, check with the lubrication supplier to assure compatibility and to obtain recommended cleaning or flushing procedures.
- Do not to mix different oils with different additive packages or different base oil formulation types. Polyglycol (PG) oils are not miscible with other oil types and should never be mixed with mineral or polyaolphaolefin (PAO) oils.

MINICASE® (SMI/SMID) WORM GEAR LUBRICATION TYPES

Oil Cross-reference Chart

ISO Viscosity	Oil Type	Ambient Temperature Range	Mobil	Shell	Castrol	FUCHS	KLÜBER LUBRICATION
VG 100	PAO	-35 to 25°C (-31 to 77°F)	Mobil SHC627	Morlina S4 B 100	N/A	N/A	Klübersynth GEM 4-100N
	PG	-25 to 25°C (-13 to 77°F)	Mobil Glygoyle 100	N/A	N/A	N/A	Klübersynth GH 6-100
	FG-PAO	-30 to 25°C (-22 to 77°F)	Mobil SHC Cibus 100	N/A	N/A	N/A	Klüberoil 4 UH 1-100N
	FG-PG	-25 to 25°C (-13 to 77°F)	Mobil Glygoyle 100	N/A	N/A	N/A	Klübersynth UH1 6-100
VG150	PAO	-35 to 25°C (-31 to 77°F)	Mobil SHC629	Morlina S4 B 150	Alphasyn T150	N/A	Klübersynth GEM 4-150N
	PG	-25 to 25°C (-13 to 77°F)	Mobil Glygoyle 150	Omala S4 WE 150	Alphasyn PG150	Renolin PG150	Klübersynth GH 6-150
	FG-PAO	-15 to 25°C (5 to 77°F)	Mobil SHC Cibus 150	N/A	N/A	Cassida GL150	Klüberoil 4 UH 1-150N
	FG-PG	-25 to 25°C (-13 to 77°F)	Mobil Glygoyle 150	N/A	N/A	N/A	Klübersynth UH1 6-150
VG220	PAO	-35 to 40°C (-31 to 104°F)	Mobil SHC630	Morlina S4 B 220	Alphasyn T220	N/A	Klübersynth GEM 4-220N
	PG	-25 to 40°C (-13 to 104°F)	Mobil Glygoyle 220	Omala S4 WE 220	Alphasyn PG220	Renolin PG220	Klübersynth GH 6-220
	FG-PAO	-25 to 40°C (-13 to 104°F)	Mobil SHC Cibus 220	N/A	N/A	Cassida GL220	Klüberoil 4 UH 1-220N
	FG-PG	-25 to 40°C (-13 to 104°F)	Mobil Glygoyle 220	N/A	N/A	Cassida WG220	Klübersynth UH1 6-220
VG460	PAO	-20 to 40°C (-4 to 104°F)	Mobil SHC 634	Morlina S4 B 460	Alphasyn T460	N/A	Klübersynth GEM 4-460N
	PG	-20 to 40°C (-4 to 104°F)	Mobil Glygoyle 460	Omala S4 WE 60	Alphasyn PG460	N/A	Klübersynth GH 6-460
	FG-PAO	-5 to 40°C (23 to 104°F)	Mobil SHC Cibus 460	N/A	N/A	Cassida GL460	Klüberoil 4 UH 1-460N
	FG-PG	-5 to 40°C (23 to 104°F)	Mobil Glygoyle 460	N/A	N/A	Cassida WG460	Klübersynth UH1 6-460
VG680	PAO	-20 to 40°C (-4 to 104°F)	Mobil SHC636	Morlina S4 B 680	N/A	N/A	Klübersynth GEM 4-680N
	PG	-20 to 40°C (-4 to 104°F)	Mobil Glygoyle 680	Omala S4 WE 680	N/A	N/A	Klübersynth GH 6-680
	FG-PAO	-5 to 40°C (23 to 104°F)	N/A	N/A	N/A	Cassida GL680	Klüberoil 4 UH1-680N
	FG-PG	-25 to 80°C (-13 to 176°F)	Mobil Glygoyle 680	N/A	N/A	Cassida WG680	Klübersynth UH1 6-680

Low-end service temperature limit may vary for a specific lubricant; Please also see the important notes on Page 1.

FLEXBLOC™ (SI/SID SERIES) WORM GEAR LUBRICATION TYPES

Lubrication Tables – FLEXBLOC™ (SI/SID Series) Worm Gear Units

Standard Oil Lubricants

NORD uses a semi automated assembly process to produce the FLEXBLOC™ gear unit assemblies. During this process the gear units are factory filled in accordance with the following table.

Standard Oil Lubricants

ISO Viscosity	Oil Type	Ambient Temperature Range	Manufacturer Brand/Type	Notes
VG680	FG-PG	-25 to 80°C (-13 to 176°F)	Klübersynth UH1 6-680	Inch
	PG	-20 to 40°C (-4 to 104°F)	Klübersynth GH 6-680	Metric
VG220	FG-PG	-25 to 40°C (-13 to 104°F)	Klübersynth UH1 6-220	Inch
	PG	-25 to 40°C (-13 to 104°F)	Klübersynth GH 6-220	Metric

Grease Options (applied to greased bearings and seal cavities)

NLGI Grade	Grease Thickener	Grease Base Oil	Ambient Temperature Range	Manufacturer Brand/Type	Notes
NLGI 2 0	Li-Complex	PAO	-25 to 80°C (-13 to 176°F)	Kluber / Petamo GHY133N	♦
	Aluminum	FG	-25 to 40°C (-13 to 104°F)	Kluber / Klubersynth UH1 14-151	♦

♦ **Stocked Lubricants**

IMPORTANT NOTE

- Observe the general lubrication guidelines in User Manual U10800.
- Ambient temperature range is a guideline only. The allowed operating temperature range for the gear unit is dependent upon assembly components used, their individual temperature limits, and the actual operating conditions.
- The selected oil type and viscosity is considered appropriate for most applications utilizing the specified NORD gear unit type. Different oil types or viscosity grades may be recommended if the gear unit is exposed to frequent high load conditions or operating under extreme low or high ambient temperature conditions.
- To prevent reducer overheating, observe the maximum operating oil temperature limits:
  Synthetic oil: 105 °C (225 °F).
- Consult NORD for recommendations in the following instances:
  √ The gear unit is exposed to frequent high load conditions.
  √ Ambient temperature conditions exceed 40 °C (104 °F) or approach 0 °C (32 °F) or lower.
  √ Fluid grease is being considered or specified for lubricating the gear unit.
  √ Lower than an ISO VG100 viscosity oil is being considered for a cold-temperature service.

Oil Formulation Codes

PAO - Synthetic Polyalphaolefin Oil
PG - Synthetic Polyglycol Oil
FG-PAO - Food-Grade, Synthetic Poyalphaolefin Oil
FG-PG - Food-Grade, Synthetic Polyglycol Oil

NOTICE

- Avoid using (EP) gear oils in worm gears that contain sulfur-phosphorous chemistries, as these additives can react adversely with bronze worm gears and accelerate wear.
- Food grade lubricants must be in compliance with FDA 212 CFR 178.3570 and qualify as a NSF-H1 lubricant. Please consult with lubrication manufacturer for more information.
- When making a lubrication change, check with the lubrication supplier to assure compatibility and to obtain recommended cleaning or flushing procedures.
- Do not to mix different oils with different additive packages or different base oil formulation types. Polyglycol (PG) oils are not miscible with other oil types and should never be mixed with mineral or polyaolphaolefin (PAO) oils.

FLEXBLOC™ (SI/SID SERIES) WORM GEAR LUBRICATION TYPES

Oil Cross-reference Chart

ISO Viscosity	Oil Type	Ambient Temperature Range	Mobil	Shell	Castrol	FUCHS	KLÜBER LUBRICATION
VG 100	PAO	-35 to 25°C (-31 to 77°F)	Mobil SHC627	Morlina S4 B 100	N/A	N/A	Klübersynth GEM 4-100N
	PG	-25 to 25°C (-13 to 77°F)	Mobil Glygoyle 100	N/A	N/A	N/A	Klübersynth GH 6-100
	FG-PAO	-30 to 25°C (-22 to 77°F)	Mobil SHC Cibus 100	N/A	N/A	N/A	Klüberoil 4 UH 1-100N
	FG-PG	-25 to 25°C (-13 to 77°F)	Mobil Glygoyle 100	N/A	N/A	N/A	Klübersynth UH1 6-100
VG150	PAO	-35 to 25°C (-31 to 77°F)	Mobil SHC629	Morlina S4 B 150	Alphasyn T150	N/A	Klübersynth GEM 4-150N
	PG	-25 to 25°C (-13 to 77°F)	Mobil Glygoyle 150	Omala S4 WE 150	Alphasyn PG150	Renolin PG150	Klübersynth GH 6-150
	FG-PAO	-15 to 25°C (5 to 77°F)	Mobil SHC Cibus 150	N/A	N/A	Cassida GL150	Klüberoil 4 UH 1-150N
	FG-PG	-25 to 25°C (-13 to 77°F)	Mobil Glygoyle 150	N/A	N/A	N/A	Klübersynth UH1 6-150
VG220	PAO	-35 to 40°C (-31 to 104°F)	Mobil SHC630	Morlina S4 B 220	Alphasyn T220	N/A	Klübersynth GEM 4-220N
	PG	-25 to 40°C (-13 to 104°F)	Mobil Glygoyle 220	Omala S4 WE 220	Alphasyn PG220	Renolin PG220	Klübersynth GH 6-220
	FG-PAO	-25 to 40°C (-13 to 104°F)	Mobil SHC Cibus 220	N/A	N/A	Cassida GL220	Klüberoil 4 UH 1-220N
	FG-PG	-25 to 40°C (-13 to 104°F)	Mobil Glygoyle 220	N/A	N/A	Cassida WG220	Klübersynth UH1 6-220
VG460	PAO	-20 to 40°C (-4 to 104°F)	Mobil SHC 634	Morlina S4 B 460	Alphasyn T460	N/A	Klübersynth GEM 4-460N
	PG	-20 to 40°C (-4 to 104°F)	Mobil Glygoyle 460	Omala S4 WE 60	Alphasyn PG460	N/A	Klübersynth GH 6-460
	FG-PAO	-5 to 40°C (23 to 104°F)	Mobil SHC Cibus 460	N/A	N/A	Cassida GL460	Klüberoil 4 UH 1-460N
	FG-PG	-5 to 40°C (23 to 104°F)	Mobil Glygoyle 460	N/A	N/A	Cassida WG460	Klübersynth UH1 6-460
VG680	PAO	-20 to 40°C (-4 to 104°F)	Mobil SHC636	Morlina S4 B 680	N/A	N/A	Klübersynth GEM 4-680N
	PG	-20 to 40°C (-4 to 104°F)	Mobil Glygoyle 680	Omala S4 WE 680	N/A	N/A	Klübersynth GH 6-680
	FG-PAO	-5 to 40°C (23 to 104°F)	N/A	N/A	N/A	Cassida GL680	Klüberoil 4 UH1-680N
	FG-PG	-25 to 80°C (-13 to 176°F)	Mobil Glygoyle 680	N/A	N/A	Cassida WG680	Klübersynth UH1 6-680

Low-end service temperature limit may vary for a specific lubricant; Please also see the important notes on Page 1.

STANDARD IN-LINE FOOTED OIL FILL QUANTITIES

Standard In-line footed lubrication

All Standard In-line reducers are shipped from NORD with a pre-determined oil fill level in accordance to the specified reducer size and mounting position. When filling these gear units the oil must be measured and added until one establishes the proper fill quantity. For additional information please refer to the "Oil & vent plug locations" documentation for your specified gear unit

IMPORTANT NOTE

For mounting orientations other than shown please consult NORD Gear. Reducer modifications may be required.

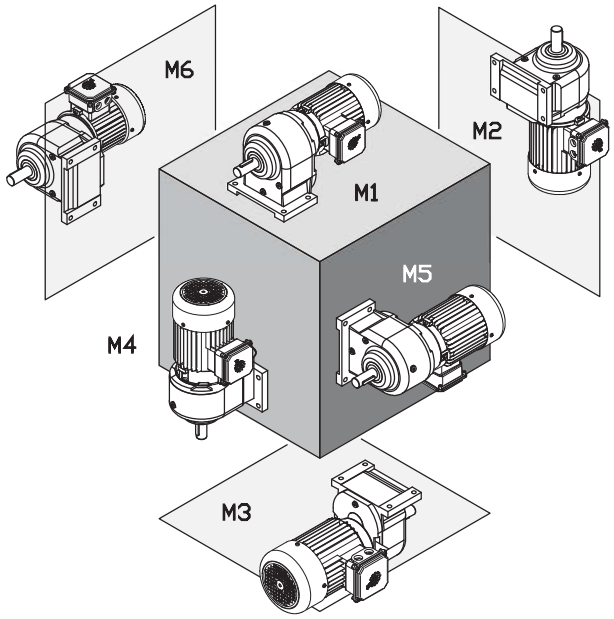

Type	M1		M2		M3		M4		M5		M6	
	Quarts	Liters	Quarts	Liters	Quarts	Liters	Quarts	Liters	Quarts	Liters	Quarts	Liters
SK0 / SK05	0.14	0.13	0.23	0.22	0.14	0.13	0.23	0.22	0.14	0.13	0.14	0.13
SK000	0.25	0.24	0.42	0.40	0.25	0.24	0.42	0.40	0.25	0.24	0.25	0.24
SK01 / SK015	0.23	0.22	0.40	0.38	0.23	0.22	0.40	0.38	0.23	0.22	0.23	0.22
SK010 / SK0105	0.40	0.38	0.63	0.60	0.40	0.38	0.63	0.60	0.40	0.38	0.40	0.38
SK20 / SK205	0.58	0.55	1.06	1.00	0.58	0.55	1.06	1.00	0.58	0.55	0.58	0.55
SK200 / SK2005	0.85	0.80	1.37	1.30	0.85	0.80	1.37	1.30	0.85	0.80	0.85	0.80
SK25 / SK255	0.53	0.50	1.06	1.00	0.53	0.50	1.06	1.00	0.53	0.50	0.53	0.50
SK250 / SK2505	1.27	1.20	1.59	1.50	1.27	1.20	1.59	1.50	1.27	1.20	1.27	1.20
SK30 / SK305	0.95	0.90	1.37	1.30	0.95	0.90	1.37	1.30	0.95	0.90	0.95	0.90
SK300 / SK3005	1.27	1.20	2.11	2.00	1.27	1.20	2.11	2.00	1.27	1.20	1.27	1.20
SK33 / SK335	1.06	1.00	1.69	1.60	1.06	1.00	1.69	1.60	1.06	1.00	1.06	1.00
SK330 / SK3305	1.90	1.80	2.96	2.80	1.90	1.80	2.96	2.80	1.90	1.80	1.90	1.80

STANDARD IN-LINE FLANGED OIL FILL QUANTITIES

Standard In-line flanged lubrication

All Standard In-line reducers are shipped from NORD with a pre-determined oil fill level in accordance to the specified reducer size and mounting position. When filling these gear units the oil must be measured and added until one establishes the proper fill quantity. For additional information please refer to the "Oil & vent plug locations" documentation for your specified gear unit

IMPORTANT NOTE

For mounting orientations other than shown please consult NORD Gear. Reducer modifications may be required.

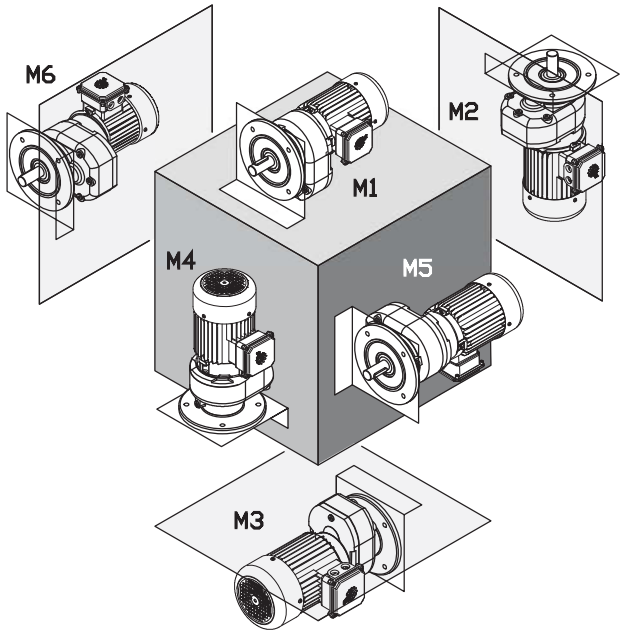

Type	M1		M2		M3		M4		M5		M6	
	Quarts	Liters	Quarts	Liters	Quarts	Liters	Quarts	Liters	Quarts	Liters	Quarts	Liters
SK0 F / SK05 F	0.14	0.13	0.23	0.22	0.14	0.13	0.23	0.22	0.14	0.13	0.14	0.13
SK000 F	0.25	0.24	0.43	0.41	0.25	0.24	0.43	0.41	0.25	0.24	0.25	0.24
SK01 F	0.23	0.22	0.40	0.38	0.23	0.22	0.40	0.38	0.23	0.22	0.23	0.22
SK010 F / SK0105 F	0.37	0.35	0.69	0.65	0.37	0.35	0.78	0.74	0.37	0.35	0.37	0.35
SK20 F	0.37	0.35	0.63	0.60	0.37	0.35	0.63	0.60	0.37	0.35	0.37	0.35
SK200 F / SK2005 F	0.69	0.65	1.00	0.95	0.69	0.65	1.16	1.10	0.69	0.65	0.69	0.65
SK25 F	0.53	0.50	1.06	1.00	0.53	0.50	1.06	1.00	0.53	0.50	0.53	0.50
SK250 F / SK2505 F	0.95	0.90	1.48	1.40	0.95	0.90	1.69	1.60	0.95	0.90	0.95	0.90
SK30 F	0.74	0.70	1.16	1.10	0.74	0.70	1.16	1.10	0.74	0.70	0.74	0.70
SK300 F / SK3005 F	1.32	1.25	1.59	1.50	1.32	1.25	1.90	1.80	1.32	1.25	1.32	1.25
SK33 F / SK335F	1.06	1.00	1.59	1.50	1.06	1.00	1.59	1.50	1.06	1.00	1.06	1.00
SK330 F / SK3305 F	1.69	1.60	2.64	2.50	1.69	1.60	3.06	2.90	1.69	1.60	1.69	1.60

HELICAL IN-LINE FOOTED OIL FILL QUANTITIES

Helical In-line footed lubrication

The following NORD Gear reducers are shipped from the factory with a pre-determined oil fill level in accordance to the specified reducer size and mounting position. For additional information, please refer to the "Oil Plug & Vent Locations" documentation for your gear unit.

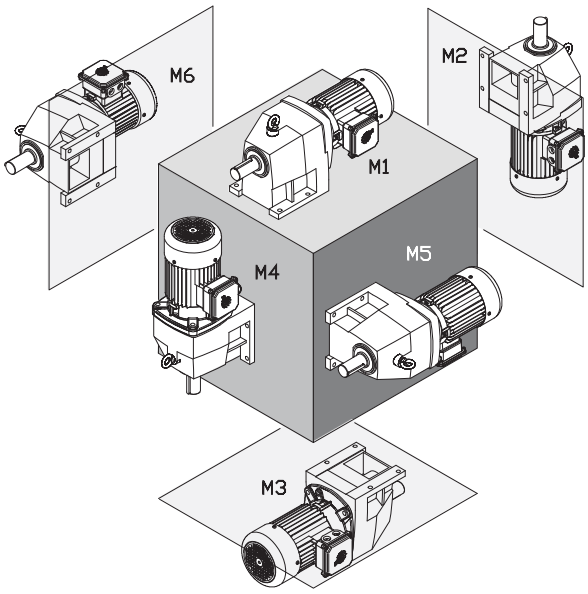

IMPORTANT NOTE

Actual oil volume can vary slightly depending upon the gear case size, mounting and ratio. Prior to commissioning the reducer, check the oil-fill level using the reducer's oil level plug and drain or add addition oil as needed. The minimum acceptable oil level is 0.15 in (4mm) below the oil level hole.

For mounting orientations other than shown please consult NORD Gear. Reducer modifications may be required.

Type	M1		M2		M3		M4		M5		M6	
	Quarts	Liters	Quarts	Liters	Quarts	Liters	Quarts	Liters	Quarts	Liters	Quarts	Liters
SK02	0.21	0.20	0.79	0.75	0.79	0.75	0.69	0.65	0.63	0.60	0.63	0.60
SK 03	0.37	0.35	1.27	1.20	0.85	0.80	1.06	1.00	0.74	0.70	0.74	0.70
SK11E	0.26	0.25	0.53	0.50	0.69	0.65	0.53	0.50	0.42	0.40	0.42	0.40
SK12	0.26	0.25	0.85	0.80	0.90	0.85	0.79	0.75	0.58	0.55	0.58	0.55
SK 13	0.79	0.75	1.37	1.30	1.37	1.30	1.27	1.20	0.79	0.75	0.79	0.75
SK21E	0.63	0.60	1.27	1.20	1.37	1.30	1.06	1.00	1.06	1.00	1.06	1.00
SK22	0.53	0.50	2.01	1.90	2.22	2.10	1.90	1.80	1.48	1.40	1.48	1.40
SK 23	1.27	1.20	2.11	2.00	2.01	1.90	2.54	2.40	1.69	1.60	1.69	1.60
SK31E	1.16	1.10	2.11	2.00	2.32	2.20	1.80	1.70	1.59	1.50	1.59	1.50
SK32	0.95	0.90	2.64	2.50	3.28	3.10	3.28	3.10	2.11	2.00	2.11	2.00
SK 33N	1.85	1.75	3.17	3.00	3.59	3.40	4.23	4.00	2.43	2.30	2.43	2.30
SK41E	1.69	1.60	2.75	2.60	3.49	3.30	2.96	2.80	2.43	2.30	2.43	2.30
SK42	1.48	1.40	4.76	4.50	4.76	4.50	4.54	4.30	3.38	3.20	3.38	3.20
SK 43	3.17	3.00	5.92	5.60	5.49	5.20	6.97	6.60	3.80	3.60	3.80	3.60
SK51E	1.90	1.80	3.70	3.50	4.33	4.10	4.23	4.00	4.02	3.80	4.02	3.80
SK52	2.64	2.50	7.40	7.00	7.19	6.80	7.19	6.80	5.39	5.10	5.39	5.10
SK 53	4.76	4.50	9.19	8.70	8.14	7.70	9.19	8.70	6.34	6.00	6.34	6.00
SK62	6.87	6.50	15.9	15.0	13.7	13.0	16.9	16.0	15.9	15.0	15.9	15.0
SK 63	13.7	13.0	15.3	14.5	15.3	14.5	16.9	16.0	13.7	13.0	13.7	13.0
SK72	10.6	10.0	24.3	23.0	19.0	18.0	27.5	26.0	24.3	23.0	24.3	23.0
SK 73	21.7	20.5	21.1	20.0	23.8	22.5	28.5	27.0	21.1	20.0	21.1	20.0
SK82	14.8	14.0	37.0	35.0	28.5	27.0	46.5	44.0	33.8	32.0	33.8	32.0
SK 83	31.7	30.0	32.8	31.0	35.9	34.0	39.1	37.0	34.9	33.0	34.9	33.0
SK92	26.4	25.0	77.0	73.0	49.7	47.0	80.0	76.0	55.0	52.0	55.0	52.0
SK 93	56.0	53.0	74.0	70.0	62.0	59.0	76.0	72.0	52.0	49.0	52.0	49.0
SK102	38.0	36.0	84.0	79.0	70.0	66.0	108	102	75.0	71.0	75.0	71.0
SK 103	78.0	74.0	75.0	71.0	78.0	74.0	102	97.0	71.0	67.0	71.0	67.0

HELICAL IN-LINE FLANGED OIL FILL QUANTITIES

Helical In-line flanged lubrication

The following NORD Gear reducers are shipped from the factory with a pre-determined oil fill level in accordance to the specified reducer size and mounting position. For additional information, please refer to the "Oil Plug & Vent Locations" documentation for your gear unit.

IMPORTANT NOTE

Actual oil volume can vary slightly depending upon the gear case size, mounting and ratio. Prior to commissioning the reducer, check the oil-fill level using the reducer's oil level plug and drain or add addition oil as needed. The minimum acceptable oil level is 0.15 in (4mm) below the oil level hole.

For mounting orientations other than shown please consult NORD Gear. Reducer modifications may be required.

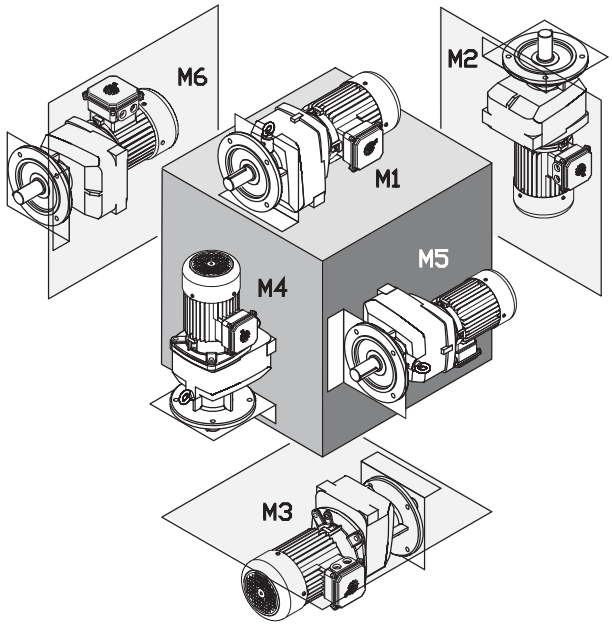

Type	M1		M2		M3		M4		M5		M6	
	Quarts	Liters	Quarts	Liters	Quarts	Liters	Quarts	Liters	Quarts	Liters	Quarts	Liters
SK02F	0.26	0.25	0.74	0.70	0.74	0.70	0.74	0.70	0.53	0.50	0.53	0.50
SK 03 F	0.58	0.55	1.00	0.95	0.95	0.90	1.27	1.20	0.95	0.90	0.95	0.90
SK11E F	0.32	0.30	0.53	0.50	0.53	0.50	0.48	0.45	0.42	0.40	0.42	0.40
SK12F	0.37	0.35	0.90	0.85	0.95	0.90	0.95	0.90	0.74	0.70	0.74	0.70
SK 13 F	1.06	1.00	1.37	1.30	1.37	1.30	1.27	1.20	1.06	1.00	1.06	1.00
SK21E F	0.53	0.50	1.27	1.20	1.37	1.30	0.63	0.60	0.95	0.90	0.95	0.90
SK22F	0.74	0.70	1.90	1.80	1.90	1.80	1.90	1.80	1.48	1.40	1.48	1.40
SK 23 F	1.48	1.40	2.75	2.60	2.43	2.30	2.96	2.80	2.96	2.80	2.96	2.80
SK31E F	0.95	0.90	1.90	1.80	1.74	1.65	1.37	1.30	1.32	1.25	1.32	1.25
SK32F	1.27	1.20	2.96	2.80	3.28	3.10	3.28	3.10	2.32	2.20	2.32	2.20
SK 33N F	2.32	2.20	3.17	3.00	3.59	3.40	4.44	4.20	2.43	2.30	2.43	2.30
SK41E F	1.27	1.20	2.43	2.30	2.85	2.70	2.11	2.00	2.01	1.90	2.01	1.90
SK42F	1.90	1.80	4.65	4.40	4.76	4.50	4.23	4.00	3.91	3.70	3.91	3.70
SK 43 F	3.70	3.50	6.02	5.70	5.28	5.00	6.45	6.10	4.33	4.10	4.33	4.10
SK51E F	1.90	1.80	3.70	3.50	4.33	4.10	3.17	3.00	4.02	3.80	4.02	3.80
SK52F	3.17	3.00	7.19	6.80	6.55	6.20	7.82	7.40	5.92	5.60	5.92	5.60
SK 53 F	5.49	5.20	8.88	8.40	7.40	7.00	9.40	8.90	7.08	6.70	7.08	6.70
SK 62 F	7.40	7.00	15.9	15.0	14.8	14.0	19.5	18.5	16.9	16.0	16.9	16.0
SK 63 F	14.3	13.5	14.8	14.0	16.4	15.5	19.0	18.0	14.8	14.0	14.8	14.0
SK 72 F	10.6	10.0	24.3	23.0	19.5	18.5	29.6	28.0	24.3	23.0	24.3	23.0
SK 73 F	23.2	22.0	23.8	22.5	24.3	23.0	29.1	27.5	21.1	20.0	21.1	20.0
SK 82 F	15.9	15.0	39.1	37.0	30.6	29.0	47.6	45.0	36.5	34.5	36.5	34.5
SK 83 F	32.8	31.0	35.9	34.0	37.0	35.0	42.3	40.0	35.9	34.0	35.9	34.0
SK 92 F	27.5	26.0	77.0	73.0	49.7	47.0	82.0	78.0	55.0	52.0	55.0	52.0
SK 93 F	56.0	53.0	74.0	70.0	62.0	59.0	78.0	74.0	52.0	49.0	52.0	49.0
SK 102 F	42.3	40.0	86.0	81.0	70.0	66.0	110	104	76.0	72.0	76.0	72.0
SK 103 F	73.0	69.0	82.0	78.0	82.0	78.0	105	99.0	71.0	67.0	71.0	67.0

CLINCHER™ OIL FILL QUANTITIES

CLINCHER™ lubrication

Unless otherwise noted below, the following NORD Gear reducers are shipped from the factory with a pre-determined oil fill level in accordance to the specified reducer size and mounting position. For additional information, please refer to the "Oil Plug & Vent Locations" documentation for your gear unit.

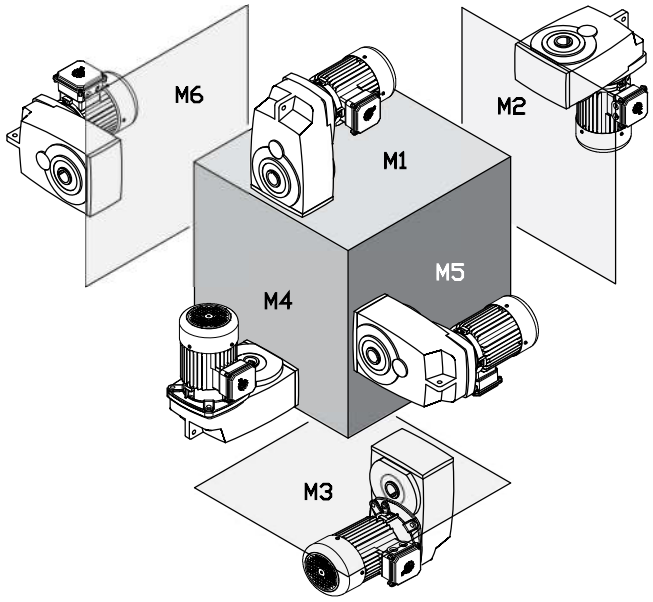

IMPORTANT NOTE

Actual oil volume can vary slightly depending upon the gear case size, mounting and ratio. Prior to commissioning the reducer, check the oil-fill level using the reducer's oil level plug and drain or add addition oil as needed. The minimum acceptable oil level is 0.15 in (4mm) below the oil level hole.

For mounting orientations other than shown please consult NORD Gear. Reducer modifications may be required.

Type	M1		M2		M3		M4		M5		M6	
	Quarts	Liters	Quarts	Liters	Quarts	Liters	Quarts	Liters	Quarts	Liters	Quarts	Liters
SK 0182NB	0.42	0.40	0.58	0.55	0.58	0.55	0.42	0.40	0.42	0.40	0.42	0.40
SK 0182.1	0.74	0.7	1.14	1.08	0.66	0.62	0.93	0.88	0.63	0.6	0.68	0.64
SK 0282NB	0.74	0.70	1.16	1.10	0.85	0.80	1.16	1.10	0.95	0.90	0.95	0.90
SK 0282.1	1.08	1.02	1.48	1.4	0.85	0.8	1.41	1.33	0.85	0.8	0.92	0.87
SK 1282	1.00	0.95	1.37	1.30	0.95	0.90	1.37	1.30	1.06	1.00	1.06	1.00
SK 1282.1	1.77	1.67	2.28	2.16	1.11	1.05	2.06	1.95	1.35	1.28	1.42	1.34
SK 1382NB	1.48	1.40	2.43	2.30	2.32	2.20	2.32	2.20	2.11	2.00	2.11	2.00
SK 1382	1.53	1.45	1.69	1.6	1.22	1.15	1.8	1.7	1.16	1.1	1.16	1.1
SK 1382.1	1.77	1.67	2.11	2	1.11	1.05	2.06	1.95	1.35	1.28	1.42	1.34
SK 2282	1.80	1.70	2.43	2.30	1.80	1.70	2.32	2.20	2.01	1.90	2.01	1.90
SK 2382	2.43	2.30	2.85	2.70	2.22	2.10	3.38	3.20	2.11	2.00	2.11	2.00
SK 3282	2.96	2.80	4.23	4.00	3.49	3.30	4.02	3.80	3.17	3.00	3.17	3.00
SK 3382	4.02	3.80	4.54	4.30	3.17	3.00	5.81	5.50	3.17	3.00	3.17	3.00
SK 4282	4.44	4.20	5.71	5.40	4.65	4.40	5.28	5.00	4.44	4.20	4.44	4.20
SK 4382	6.45	6.10	7.29	6.90	5.18	4.90	8.88	8.40	5.28	5.00	5.28	5.00
SK 5282	7.93	7.50	9.30	8.80	7.93	7.50	9.30	8.80	7.61	7.20	7.61	7.20
SK 5382	13.2	12.5	12.7	12.0	7.08	6.70	14.8	14.0	8.77	8.30	8.77	8.30
SK 6282	18.0	17.0	16.4	15.5	13.2	12.5	18.5	17.5	11.6	11.0	14.8	14.0
SK 6382	16.9	16.0	13.7	13.0	10.6	10.0	19.0	18.0	14.8	14.0	13.2	12.5
SK 7282	26.9	25.5	22.2	21.0	21.7	20.5	28.5	27.0	16.9	16.0	22.2	21.0
SK 7382	23.2	22.0	22.2	21.0	16.9	16.0	26.4	25.0	24.3	23.0	23.2	22.0
SK 8282	39.6	37.5	34.9	33.0	32.2	30.5	46.5	44.0	32.8	31.0	32.8	31.0
SK 8382	36.5	34.5	34.3	32.5	26.4	25.0	40.2	38.0	37.0	35.0	31.7	30.0
SK 9282	79.2	75.0	74.0	70.0	58.1	55.0	76.1 †	72.0 †	63.4	60.0	62.4	59.0
SK 9382	78.2	74.0	74.0	70.0	47.6	45.0	79.2 †	75.0 †	68.7	65.0	63.4	60.0
SK 10282	95.0	90.0	95.0	90.0	42.3	40.0	95.0 †	90.0 †	63.0	60.0	87.0	82.0
SK 10382	90.0	85.0	95.0	90.0	77.0	73.0	106 †	100 †	85	80.0	85.0	80.0
SK10382.1	80.3	76.0	84.5	80.0	75.0	71.0	98.2	93.0	76.1	72.0	70.8	67.0
SK 11282*	174	165	169	160	153	145	206 †	195 †	106	100	148	140
SK 11382*	169	160	164	155	148	140	222 †	210 †	164	155	143	135
SK11382.1*	134.2	127	140.5	133	124.7	118	205	194	131	124	118.4	112
SK 12382*	169	160	164	155	148	140	**222 †**	**210 †**	164	155	143	135

*** For shipping purposes the larger Clincher™ gear units are supplied without oil.**

† Oil quantities shown are for the gearbox only. When the OT (oil tank) option is used, the oil must be filled to the level shown on the dipstick which is located inside of the oil tank. Even when the gear unit is filled by NORD, the user MUST add more oil untill the oil is filled to the proper level.

NORD Gear Limited
Toll Free in Canada: 800.668.4378

NORD Gear Corporation
Toll Free in the United States: 888.314.6673

90.1 HELICAL-BEVEL FOOTED OIL FILL QUANTITIES

90.1 Helical-bevel footed lubrication

Unless otherwise noted below, the following NORD Gear reducers are shipped from the factory with a pre-determined oil fill level in accordance to the specified reducer size and mounting position. For additional information, please refer to the "Oil Plug & Vent Locations" documentation for your gear unit.

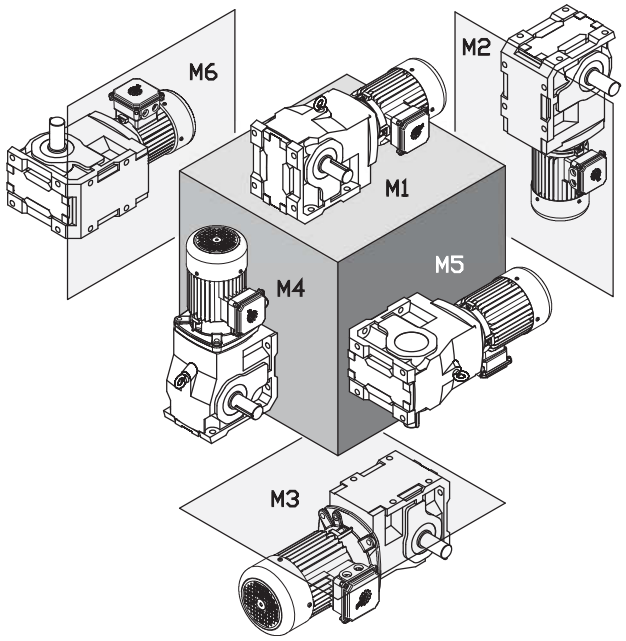

IMPORTANT NOTE

Actual oil volume can vary slightly depending upon the gear case size, mounting and ratio. Prior to commissioning the reducer, check the oil-fill level using the reducer's oil level plug and drain or add addition oil as needed. The minimum acceptable oil level is 0.15 in (4mm) below the oil level hole.

For mounting orientations other than shown please consult NORD Gear. Reducer modifications may be required.

Type	M1		M2		M3		M4		M5		M6	
	Quarts	Liters	Quarts	Liters	Quarts	Liters	Quarts	Liters	Quarts	Liters	Quarts	Liters
SK 9012.1	0.74	0.70	1.80	1.70	2.01	1.90	2.22	2.10	1.16	1.10	1.59	1.50
SK 9013.1	1.43	1.35	2.22	2.10	2.27	2.15	2.91	2.75	1.06	1.00	1.90	1.80
SK 9016.1	0.74	0.70	1.80	1.70	2.01	1.90	2.22	2.10	1.16	1.10	1.59	1.50
SK 9017.1	1.37	1.30	2.11	2.00	2.22	2.10	2.85	2.70	1.06	1.00	1.80	1.70
SK 9022.1	1.37	1.30	3.06	2.90	3.49	3.30	4.02	3.80	1.80	1.70	2.96	2.80
SK 9023.1	2.32	2.20	3.38	3.20	3.80	3.60	4.97	4.70	2.32	2.20	3.06	2.90
SK 9032.1	1.90	1.80	5.71	5.40	6.45	6.10	7.19	6.80	3.17	3.00	4.86	4.60
SK 9033.1	3.28	3.10	6.02	5.70	6.66	6.30	8.45	8.00	3.59	3.40	5.07	4.80
SK 9042.1	2.85	2.70	9.51	9.00	10.6	10.0	11.3	10.7	5.49	5.20	8.14	7.70
SK 9043.1	5.28	5.00	10.7	10.1	11.6	11.0	14.1	13.3	6.02	5.70	8.56	8.10
SK 9052.1	6.87	6.50	16.9	16.0	20.1	19.0	22.7	21.5	11.6	11.0	16.4	15.5
SK 9053.1	10.6	10.0	18.0	17.0	21.1	20.0	25.9	24.5	12.2	11.5	17.4	16.5
SK 9062.1	10.6	10.0	29.1	27.5	33.8	32.0	38.0	36.0	19.0	18.0	25.4	24.0
SK 9072.1	10.6	10.0	29.1	27.5	33.8	32.0	38.0	36.0	19.0	18.0	25.4	24.0
SK 9082.1	18.0	17.0	54.0	52.0	66.0	63.0	76.0	72.0	34.9	33.0	49.1	46.5
SK 9086.1	30.6	29.0	77.0	73.0	90.0	85.0	108	102	51.0	48.0	66.0	62.0
SK 9092.1	43.3	41.0	166	157	180	170	182	172	85.0	80.0	95.0	90.0
SK 9096.1	74.0	70.0	198	187	205	194	268	254	115	109	161	152

Oil Levels shown apply to base models and gear units ending in LX, AX, & VX.

90.1 HELICAL-BEVEL FLANGED OIL FILL QUANTITIES

90.1 Helical-bevel flanged lubrication

Unless otherwise noted below, the following NORD Gear reducers are shipped from the factory with a pre-determined oil fill level in accordance to the specified reducer size and mounting position. For additional information, please refer to the "Oil Plug & Vent Locations" documentation for your gear unit.

IMPORTANT NOTE

Actual oil volume can vary slightly depending upon the gear case size, mounting and ratio. Prior to commissioning the reducer, check the oil-fill level using the reducer's oil level plug and drain or add addition oil as needed. The minimum acceptable oil level is 0.15 in (4mm) below the oil level hole.

For mounting orientations other than shown please consult NORD Gear. Reducer modifications may be required.

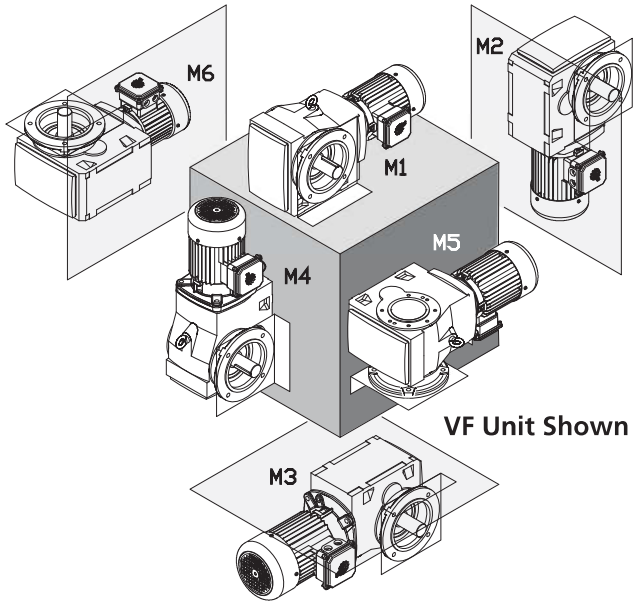

VF Unit Shown

Type	M1		M2		M3		M4		M5		M6	
	Quarts	Liters	Quarts	Liters	Quarts	Liters	Quarts	Liters	Quarts	Liters	Quarts	Liters
SK 9012.1	1.06	1.00	2.01	1.90	2.01	1.90	2.32	2.20	1.27	1.20	1.80	1.70
SK 9013.1	1.53	1.45	2.43	2.30	2.22	2.10	2.96	2.80	1.11	1.05	1.90	1.80
SK 9016.1	1.06	1.00	2.01	1.90	2.01	1.90	2.32	2.20	1.27	1.20	1.80	1.70
SK 9017.1	1.53	1.45	2.43	2.30	2.22	2.10	2.96	2.80	1.11	1.05	1.90	1.80
SK 9022.1	1.69	1.60	3.70	3.50	3.70	3.50	4.44	4.20	2.43	2.30	2.96	2.80
SK 9023.1	2.43	2.30	3.70	3.50	4.02	3.80	5.60	5.30	2.32	2.20	3.59	3.40
SK 9032.1	2.22	2.10	5.07	4.80	6.76	6.40	7.50	7.10	3.49	3.30	5.39	5.10
SK 9033.1	3.91	3.70	6.02	5.70	7.08	6.70	9.09	8.60	3.80	3.60	5.60	5.30
SK 9042.1	4.76	4.50	10.6	10.0	10.6	10.0	12.2	11.5	6.87	6.50	8.66	8.20
SK 9043.1	6.87	6.50	11.1	10.5	12.6	11.9	15.5	14.7	7.08	6.70	9.83	9.30
SK 9052.1	7.93	7.50	17.4	16.5	21.1	20.0	24.8	23.5	12.2	11.5	19.0	18.0
SK 9053.1	13.7	13.0	19.0	18.0	22.7	21.5	28.0	26.5	13.7	13.0	18.0	17.0
SK 9062.1	12.7	12.0	29.1	27.5	34.9	33.0	40.7	38.5	20.1	19.0	27.5	26.0
SK 9072.1	12.7	12.0	29.1	27.5	34.9	33.0	40.7	38.5	20.1	19.0	27.5	26.0
SK 9082.1	22.2	21.0	57.0	54.0	70.0	66.0	85.0	80.0	40.2	38.0	55.0	52.0
SK 9086.1	38.0	36.0	82.0	78.0	96.0	91.0	113	107	56.0	53.0	80.0	76.0
SK 9092.1	42.3	40.0	137	130	163	154	185	175	87.0	82.0	96.0	91.0
SK 9096.1	85.0	80.0	198	187	204	193	272	257	119	113	165	156

Oil Levels shown apply to base models and gear units ending in AZ, AF, VZ, & VF.

92 SERIES HELICAL-BEVEL FOOTED OIL FILL QUANTITIES

92 Helical-bevel footed lubrication

The following NORD Gear reducers are shipped from the factory with a pre-determined oil fill level in accordance to the specified reducer size and mounting position. For additional information, please refer to the "Oil Plug & Vent Locations" documentation for your gear unit.

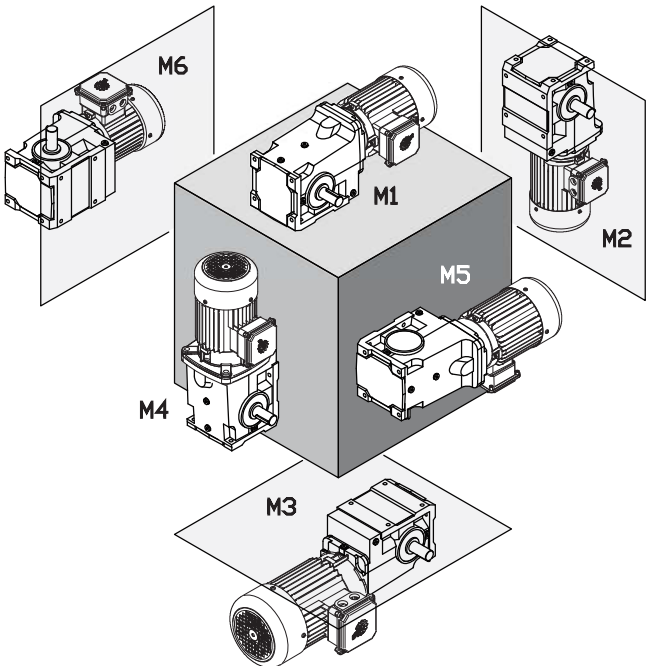

IMPORTANT NOTE

Actual oil volume can vary slightly depending upon the gear case size, mounting and ratio. Prior to commissioning the reducer, check the oil-fill level using the reducer's oil level plug and drain or add addition oil as needed. The minimum acceptable oil level is 0.15 in (4mm) below the oil level hole.

For mounting orientations other than shown please consult NORD Gear. Reducer modifications may be required.

Type	M1		M2		M3		M4		M5		M6	
	Quarts	Liters	Quarts	Liters	Quarts	Liters	Quarts	Liters	Quarts	Liters	Quarts	Liters
SK 92072	0.42	0.40	0.63	0.60	0.53	0.50	0.58	0.55	0.42	0.40	0.42	0.40
SK 92172	0.63	0.60	0.95	0.90	1.06	1.00	1.16	1.10	1.16	1.10	0.85	0.80
SK 92372	0.95	0.90	1.69	1.60	1.59	1.50	2.01	1.90	1.59	1.50	0.95	0.90
SK 92672	1.90	1.80	3.70	3.50	3.80	3.60	3.59	3.40	2.75	2.60	2.75	2.60
SK 92772	2.43	2.30	4.76	4.50	4.86	4.60	5.60	5.30	4.33	4.10	4.33	4.10

Oil Levels shown apply to base models and gear units ending in LX, AX, & VX.

92.1/93.1 SERIES HELICAL-BEVEL OIL FILL QUANTITIES

92.1/93.1 Helical-bevel mount lubrication

All NORD Gear reducers are shipped from the factory with a pre-determined oil fill level in accordance to the specified reducer size & mounting position. For additional information, please refer to the "Oil Plug & Vent Locations" documentation for your gear unit.

IMPORTANT NOTE

Actual oil volume can vary slightly depending upon the gear case size, mounting and ratio. Prior to commissioning the reducer, check the oil-fill level using the reducer's oil level plug and drain or add addition oil as needed.

For mounting orientations other than shown please consult NORD Gear. Reducer modifications may be required.

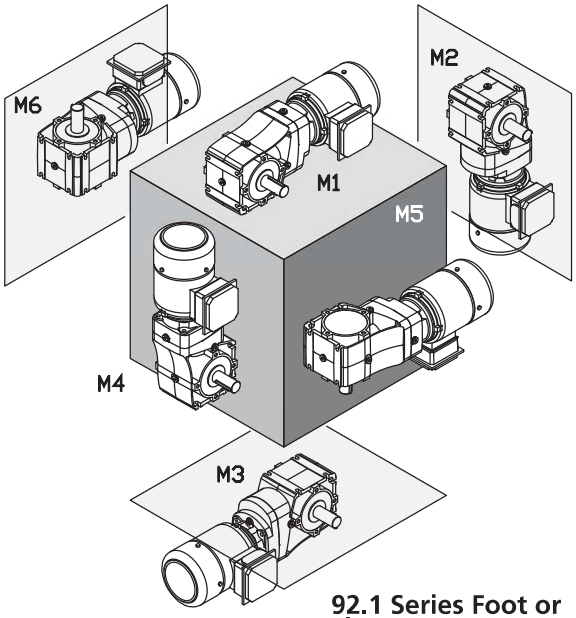

92.1 Series Foot or Flange Mount

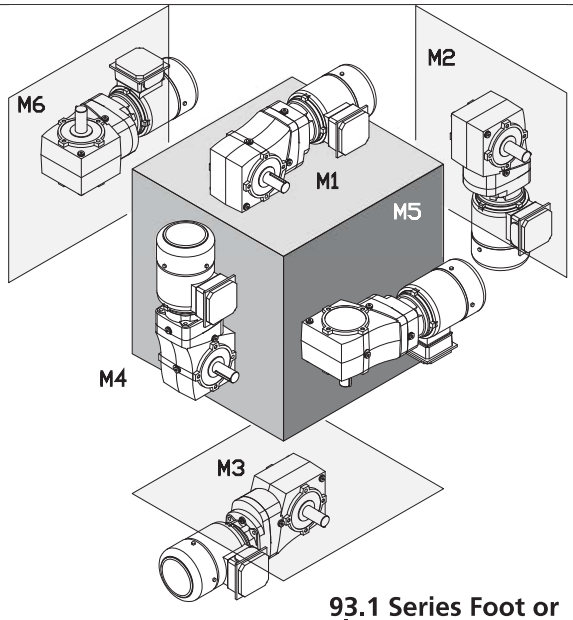

93.1 Series Foot or Flange Mount

92.1 Series Oil Fill

Type	M1		M2		M3		M4		M5		M6	
	Quarts	Liters	Quarts	Liters	Quarts	Liters	Quarts	Liters	Quarts	Liters	Quarts	Liters
SK 920072.1	0.22	0.21	0.50	0.47	0.22	0.36	0.22	0.34	0.22	0.28	0.22	0.28
SK 92072.1	0.28	0.26	0.52	0.49	0.44	0.42	0.57	0.54	0.31	0.29	0.33	0.31
SK 92172.1	0.36	0.34	0.65	0.61	0.55	0.52	0.71	0.67	0.44	0.42	0.51	0.48
SK 92372.1	0.45	0.43	0.97	0.92	0.77	0.73	0.88	0.83	0.58	0.55	0.65	0.61
SK 92672.1	0.90	0.85	1.69	1.60	1.27	1.20	1.59	1.50	1.08	1.02	1.08	1.02
SK 92772.1	1.37	1.30	2.80	2.65	1.97	1.86	2.85	2.70	1.69	1.60	1.69	1.60

Oil levels shown apply to all foot & flange mounted units.

93.1 Series Oil Fill

Type	M1		M2		M3		M4		M5		M6	
	Quarts	Liters	Quarts	Liters	Quarts	Liters	Quarts	Liters	Quarts	Liters	Quarts	Liters
SK 930072.1	0.30	0.28	0.69	0.65	0.22	0.56	0.22	0.54	0.22	0.39	0.22	0.39
SK 93072.1	0.41	0.39	0.98	0.93	0.83	0.79	1.08	1.02	0.52	0.49	0.66	0.62
SK 93172.1	0.63	0.60	1.24	1.17	0.99	0.94	1.29	1.22	0.69	0.65	0.90	0.85
SK 93372.1	1.06	1.00	2.08	1.97	1.74	1.65	2.26	2.14	1.18	1.12	1.42	1.34
SK 93672.1	1.90	1.80	3.41	3.23	2.86	2.71	4.02	3.80	2.13	2.02	2.59	2.45
SK 93772.1	2.87	2.72	4.89	4.63	3.91	3.70	6.13	5.80	3.10	2.93	3.43	3.25

Oil levels shown apply to all foot & flange mounted units.

NORD Gear Limited
Toll Free in Canada: 800.668.4378

NORD Gear Corporation
Toll Free in the United States: 888.314.6673

92 SERIES HELICAL-BEVEL FLANGED OIL FILL QUANTITIES

92 Helical-bevel flanged lubrication

The following NORD Gear reducers are shipped from the factory with a pre-determined oil fill level in accordance to the specified reducer size and mounting position. For additional information, please refer to the "Oil Plug & Vent Locations" documentation for your gear unit.

IMPORTANT NOTE

Actual oil volume can vary slightly depending upon the gear case size, mounting and ratio. Prior to commissioning the reducer, check the oil-fill level using the reducer's oil level plug and drain or add addition oil as needed. The minimum acceptable oil level is 0.15 in (4mm) below the oil level hole.

For mounting orientations other than shown please consult NORD Gear. Reducer modifications may be required.

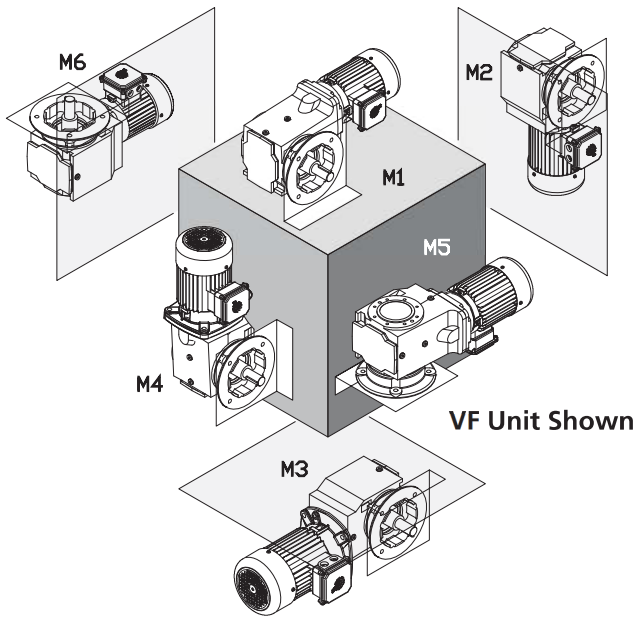

VF Unit Shown

Type	M1		M2		M3		M4		M5		M6	
	Quarts	Liters	Quarts	Liters	Quarts	Liters	Quarts	Liters	Quarts	Liters	Quarts	Liters
SK 92072	0.42	0.40	0.63	0.60	0.58	0.55	0.58	0.55	0.42	0.40	0.42	0.40
SK 92172	0.53	0.50	1.06	1.00	0.95	0.90	1.11	1.05	0.95	0.90	0.63	0.60
SK 92372	1.27	1.20	1.69	1.60	1.59	1.50	2.01	1.90	1.37	1.30	1.37	1.30
SK 92672	1.69	1.60	2.96	2.80	2.64	2.50	3.49	3.30	2.54	2.40	2.54	2.40
SK 92772	2.96	2.80	4.65	4.40	4.76	4.50	5.81	5.50	3.70	3.50	3.70	3.50

Oil Levels shown apply to gear units ending in AZ, AF, VZ, & VF.

HELICAL-WORM FOOTED OIL FILL QUANTITIES

Helical-worm footed lubrication

The following NORD Gear reducers are shipped from the factory with a pre-determined oil fill level in accordance to the specified reducer size and mounting position. For additional information, please refer to the "Oil Plug & Vent Locations" documentation for your gear unit.

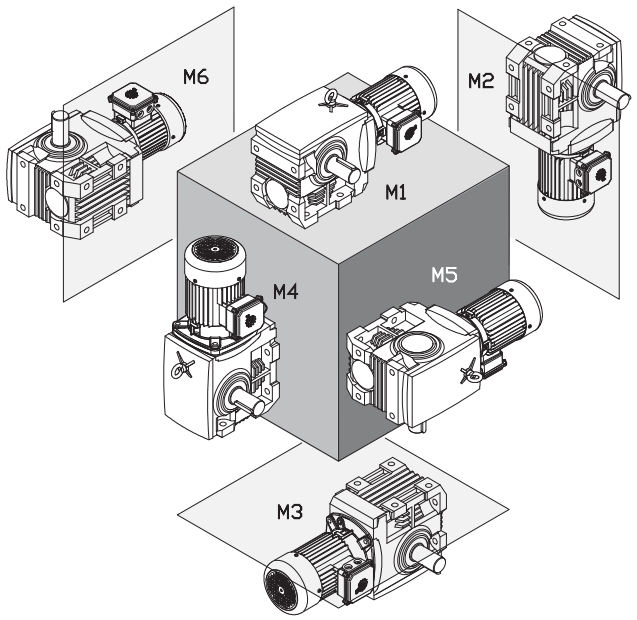

IMPORTANT NOTE

Actual oil volume can vary slightly depending upon the gear case size, mounting and ratio. Prior to commissioning the reducer, check the oil-fill level using the reducer's oil level plug and drain or add addition oil as needed. The minimum acceptable oil level is 0.15 in (4mm) below the oil level hole.

For mounting orientations other than shown please consult NORD Gear. Reducer modifications may be required.

Type	M1		M2		M3		M4		M5		M6	
	Quarts	Liters	Quarts	Liters	Quarts	Liters	Quarts	Liters	Quarts	Liters	Quarts	Liters
SK 02040	0.42	0.40	0.85	0.80	0.79	0.75	0.69	0.65	0.53	0.50	0.53	0.50
SK 02040.1	0.13	0.12	0.48	0.45	0.31	0.29	0.41	0.39	0.30	0.28	0.30	0.28
SK 02050	0.42	0.40	1.48	1.40	1.16	1.10	1.37	1.30	0.74	0.70	0.74	0.70
SK 13050	0.79	0.75	1.85	1.75	1.37	1.30	1.85	1.75	0.79	0.75	0.79	0.75
SK 12063	0.63	0.60	1.90	1.80	1.27	1.20	1.69	1.60	1.06	1.00	1.06	1.00
SK 13063	1.06	1.00	2.43	2.30	1.59	1.50	2.32	2.20	1.16	1.10	1.16	1.10
SK 12080	0.95	0.90	3.28	3.10	2.54	2.40	3.17	3.00	1.90	1.80	1.90	1.80
SK 13080	1.80	1.70	3.70	3.50	3.70	3.50	3.70	3.50	2.11	2.00	2.11	2.00
SK 32100	1.59	1.50	6.66	6.30	5.92	5.60	5.81	5.50	3.80	3.60	3.80	3.60
SK 33100	2.54	2.40	6.76	6.40	5.71	5.40	6.87	6.50	3.59	3.40	3.59	3.40
SK 42125	2.96	2.80	12.5	11.8	10.8	10.2	10.6	10.0	6.55	6.20	6.55	6.20
SK 43125	4.49	4.25	13.7	13.0	11.1	10.5	14.3	13.5	7.61	7.20	7.61	7.20

HELICAL-WORM SOLID SHAFT/FLANGED OIL FILL QUANTITIES

Helical-worm solid shaft/flanged lubrication

The following NORD Gear reducers are shipped from the factory with a pre-determined oil fill level in accordance to the specified reducer size and mounting position. For additional information, please refer to the "Oil Plug & Vent Locations" documentation for your gear unit.

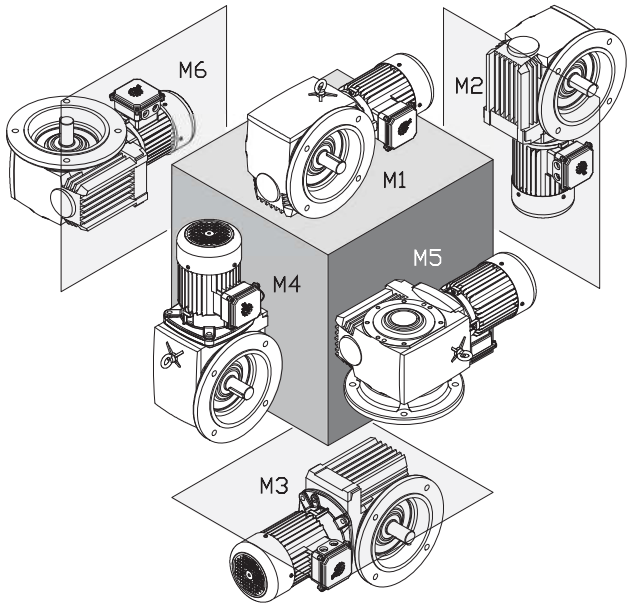

IMPORTANT NOTE

Actual oil volume can vary slightly depending upon the gear case size, mounting and ratio. Prior to commissioning the reducer, check the oil-fill level using the reducer's oil level plug and drain or add addition oil as needed. The minimum acceptable oil level is 0.15 in (4mm) below the oil level hole.

For mounting orientations other than shown please consult NORD Gear. Reducer modifications may be required.

Type	M1		M2		M3		M4		M5		M6	
	Quarts	Liters	Quarts	Liters	Quarts	Liters	Quarts	Liters	Quarts	Liters	Quarts	Liters
SK 02040 VF	0.53	0.50	0.85	0.80	0.79	0.75	0.63	0.60	0.53	0.50	0.53	0.50
SK 02040.1	0.13	0.12	0.48	0.45	0.31	0.29	0.41	0.39	0.30	0.28	0.30	0.28
SK 02050 VF	0.42	0.40	1.59	1.50	1.32	1.25	1.27	1.20	0.95	0.90	0.79	0.75
SK 13050 VF	0.79	0.75	1.90	1.80	1.59	1.50	1.80	1.70	1.11	1.05	0.95	0.90
SK 12063 VF	0.53	0.50	2.06	1.95	1.80	1.70	1.85	1.75	1.27	1.20	1.00	0.95
SK 13063 VF	1.06	1.00	2.43	2.30	2.01	1.90	2.32	2.20	1.43	1.35	1.16	1.10
SK 12080 VF	0.95	0.90	3.91	3.70	3.38	3.20	3.59	3.40	2.64	2.50	2.43	2.30
SK 13080 VF	1.69	1.60	4.02	3.80	3.70	3.50	4.12	3.90	2.85	2.70	2.64	2.50
SK 32100 VF	1.48	1.40	6.66	6.30	6.45	6.10	6.45	6.10	4.23	4.00	3.80	3.60
SK 33100 VF	2.80	2.65	7.61	7.20	6.76	6.40	8.03	7.60	4.54	4.30	4.02	3.80
SK 42125 VF	3.17	3.00	12.2	11.5	12.2	11.5	11.6	11.0	8.88	8.40	7.71	7.30
SK 43125 VF	4.97	4.70	15.9	15.0	13.7	13.0	16.9	16.0	9.51	9.00	8.14	7.70

HELICAL-WORM HOLLOW SHAFT OIL FILL QUANTITIES

Helical-worm hollow shaft lubrication

The following NORD Gear reducers are shipped from the factory with a pre-determined oil fi ll level in accordance to the specifi ed reducer size and mounting position. For additional information, please refer to the "Oil Plug & Vent Locations" documentation for your gear unit.

IMPORTANT NOTE

Actual oil volume can vary slightly depending upon the gear case size, mounting and ratio. Prior to commissioning the reducer, check the oil-fi ll level using the reducer's oil level plug and drain or add addition oil as needed. The minimum acceptable oil level is 0.15 in (4mm) below the oil level hole.

For mounting orientations other than shown please consult NORD Gear. Reducer modifications may be required.

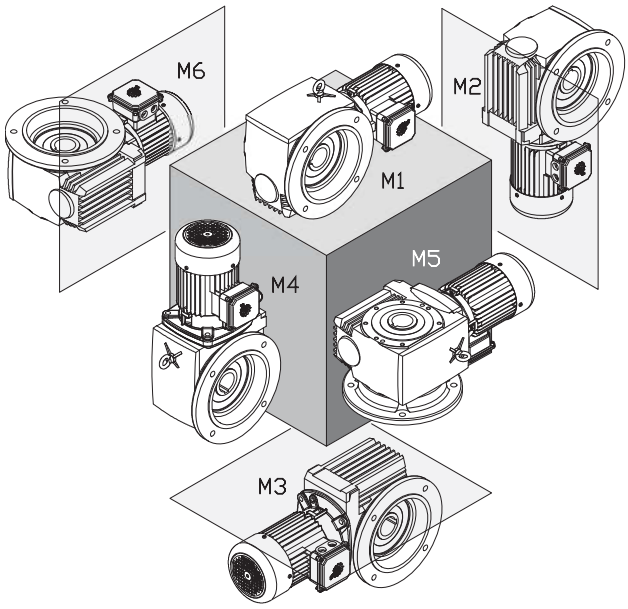

AF Unit Shown

Type	M1		M2		M3		M4		M5		M6	
	Quarts	Liters	Quarts	Liters	Quarts	Liters	Quarts	Liters	Quarts	Liters	Quarts	Liters
SK 02040	0.42	0.40	0.74	0.70	0.69	0.65	0.69	0.65	0.58	0.55	0.58	0.55
SK 02040.1	0.13	0.12	0.48	0.45	0.31	0.29	0.41	0.39	0.30	0.28	0.30	0.28
SK 02050	0.48	0.45	1.32	1.25	1.22	1.15	1.16	1.10	0.79	0.75	0.79	0.75
SK 13050	0.95	0.90	1.90	1.80	1.37	1.30	1.74	1.65	1.37	1.30	1.37	1.30
SK 12063	0.58	0.55	1.53	1.45	1.69	1.60	1.69	1.60	1.16	1.10	1.16	1.10
SK 13063	1.11	1.05	2.22	2.10	1.90	1.80	2.22	2.10	1.48	1.40	1.48	1.40
SK 12080	0.85	0.80	3.28	3.10	3.38	3.20	2.96	2.80	1.90	1.80	1.90	1.80
SK 13080	1.69	1.60	3.80	3.60	3.06	2.90	3.80	3.59	2.11	2.00	2.11	2.00
SK 32100	1.59	1.50	5.92	5.60	5.92	5.60	5.60	5.30	3.38	3.20	3.38	3.20
SK 33100	2.75	2.60	6.34	6.00	6.13	5.80	6.66	6.30	3.70	3.50	3.70	3.50
SK 42125	3.17	3.00	13.2	12.5	11.4	10.8	11.4	10.8	6.87	6.50	6.87	6.50
SK 43125	4.86	4.60	14.4	13.6	12.0	11.4	15.1	14.3	8.03	7.60	8.03	7.60

Oil Levels shown apply to gear units ending in AZ, AF.

NORDBLOC® FOOTED OIL FILL QUANTITIES

NORDBLOC® footed lubrication

The following NORD Gear reducers are shipped from the factory with a pre-determined oil fill level in accordance to the specified reducer size and mounting position. For additional information, please refer to the "Oil Plug & Vent Locations" documentation for your gear unit.

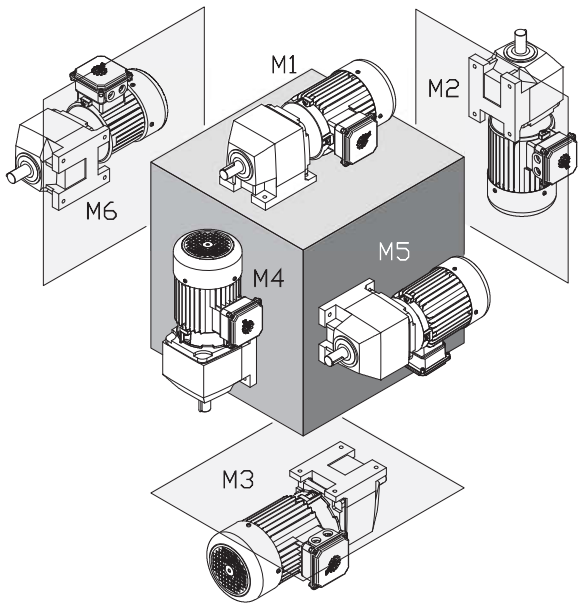

IMPORTANT NOTE

Actual oil volume can vary slightly depending upon the gear case size, mounting and ratio. Prior to commissioning the reducer, check the oil-fill level using the reducer's oil level plug and drain or add addition oil as needed. The minimum acceptable oil level is 0.15 in (4mm) below the oil level hole.

For mounting orientations other than shown please consult NORD Gear. Reducer modifications may be required.

Type	M1		M2		M3		M4		M5		M6	
	Quarts	Liters	Quarts	Liters	Quarts	Liters	Quarts	Liters	Quarts	Liters	Quarts	Liters
SK 172	0.37	0.35	0.53	0.50	0.53	0.50	0.53	0.50	0.53	0.50	0.53	0.50
SK 272	0.63	0.60	1.06	1.00	1.06	1.00	1.06	1.00	1.06	1.00	1.06	1.00
SK 273	0.66	0.62	1.16	1.10	1.16	1.10	1.16	1.10	1.16	1.10	1.16	1.10
SK 372	0.63	0.60	1.06	1.00	1.06	1.00	1.06	1.00	1.06	1.00	1.06	1.00
SK 373	0.58	0.55	1.16	1.10	1.16	1.10	1.16	1.10	1.16	1.10	1.16	1.10
SK 472	1.06	1.00	2.01	1.90	2.01	1.90	2.11	2.00	1.90	1.80	1.90	1.80
SK 473	1.37	1.30	2.64	2.50	2.22	2.10	2.54	2.40	2.22	2.10	2.22	2.10
SK 572	1.06	1.00	2.01	1.90	2.01	1.90	2.11	2.00	1.90	1.80	1.90	1.80
SK 573	1.37	1.30	2.64	2.50	2.22	2.10	2.54	2.40	2.22	2.10	2.22	2.10
SK 672	1.48	1.40	3.59	3.40	3.28	3.10	3.33	3.15	1.53	1.45	3.33	3.15
SK 673	1.90	1.80	4.02	3.80	3.38	3.20	3.59	3.40	3.06	2.90	3.17	3.00
SK 772	2.11	2.00	3.49	3.30	3.70	3.50	4.44	4.20	2.85	2.70	3.49	3.30
SK 773	2.64	2.50	4.76	4.50	3.91	3.70	4.86	4.60	3.49	3.30	3.49	3.30
SK 872	3.91	3.70	10.1	9.60	9.62	9.10	7.71	7.30	4.97	4.70	8.45	8.00
SK 873	6.55	6.20	8.88	8.40	7.93	7.50	9.62	9.10	7.93	7.50	7.93	7.50
SK 972	6.87	6.50	16.9	16.0	16.6	15.7	15.5	14.7	8.98	8.50	14.8	14.0
SK 973	11.6	11.0	16.7	15.8	13.7	13.0	16.9	16.0	14.1	13.3	13.7	13.0

NORDBLOC® FLANGED OIL FILL QUANTITIES

NORDBLOC® flanged lubrication

The following NORD Gear reducers are shipped from the factory with a pre-determined oil fill level in accordance to the specified reducer size and mounting position. For additional information, please refer to the "Oil Plug & Vent Locations" documentation for your gear unit.

IMPORTANT NOTE

Actual oil volume can vary slightly depending upon the gear case size, mounting and ratio. Prior to commissioning the reducer, check the oil-fill level using the reducer's oil level plug and drain or add addition oil as needed. The minimum acceptable oil level is 0.15 in (4mm) below the oil level hole.

For mounting orientations other than shown please consult NORD Gear. Reducer modifications may be required.

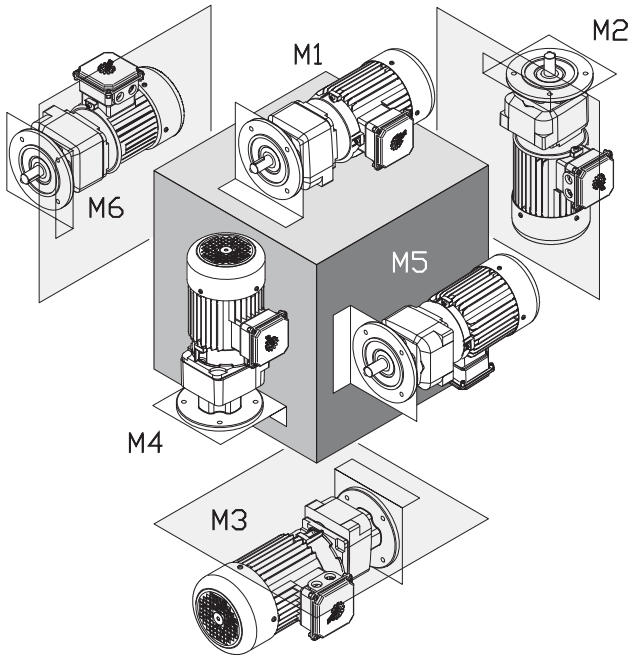

Mounting Position	M1		M2		M3		M4		M5		M6	
	Quarts	Liters	Quarts	Liters	Quarts	Liters	Quarts	Liters	Quarts	Liters	Quarts	Liters
SK 172 F	0.37	0.35	0.53	0.50	0.53	0.50	0.53	0.50	0.53	0.50	0.53	0.50
SK 272 F	0.63	0.60	1.06	1.00	1.06	1.00	1.06	1.00	1.06	1.00	1.06	1.00
SK 273 F	0.66	0.62	1.16	1.10	1.16	1.10	1.16	1.10	1.16	1.10	1.16	1.10
SK 372 F	0.63	0.60	1.06	1.00	1.06	1.00	1.06	1.00	1.06	1.00	1.06	1.00
SK 373 F	0.58	0.55	1.16	1.10	1.16	1.10	1.16	1.10	1.16	1.10	1.16	1.10
SK 472 F	1.06	1.00	2.01	1.90	2.01	1.90	2.01	1.90	2.01	1.90	1.59	1.50
SK 473 F	1.32	1.25	2.54	2.40	2.22	2.10	2.64	2.50	2.22	2.10	2.22	2.10
SK 572 F	1.06	1.00	2.01	1.90	2.01	1.90	2.01	1.90	2.01	1.90	1.59	1.50
SK 573 F	1.32	1.25	2.54	2.40	2.22	2.10	2.64	2.50	2.22	2.10	2.22	2.10
SK 672 F	1.22	1.15	3.59	3.40	2.85	2.70	2.96	2.80	1.32	1.25	2.85	2.70
SK 673 F	1.80	1.70	4.02	3.80	3.17	3.00	3.38	3.20	3.17	3.00	3.17	3.00
SK 772 F	1.69	1.60	3.49	3.30	3.70	3.50	3.49	3.30	3.28	3.10	3.28	3.10
SK 773 F	2.43	2.30	5.28	5.00	3.80	3.60	4.76	4.50	4.12	3.90	4.12	3.90
SK 872 F	3.70	3.50	9.51	9.00	8.35	7.90	8.14	7.70	4.12	3.90	7.61	7.20
SK 873 F	5.28	5.00	9.30	8.80	8.03	7.60	8.45	8.00	8.45	8.00	8.45	8.00
SK 972 F	6.87	6.50	15.9	15.0	13.7	13.0	14.3	13.5	6.87	6.50	12.7	12.0
SK 973 F	10.9	10.3	17.4	16.5	13.7	13.0	16.9	16.0	14.8	14.0	14.8	14.0

NORDBLOC®.1 FOOTED OIL FILL QUANTITIES

NORDBLOC®.1 Fill Quantities (Footed)

The following NORD Gear reducers are shipped from the factory with a pre-determined oil fill level in accordance to the specified reducer size and mounting position. For oil plug & vent locations please see U14700.

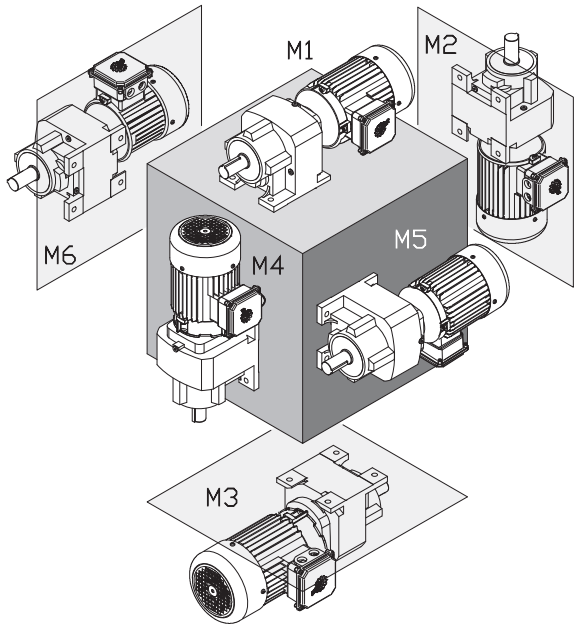

IMPORTANT NOTE

Actual oil volume can vary slightly depending upon the gear case size, mounting and ratio. Prior to commissioning the reducer, check the oil-fill level using the reducer's oil level plug and drain or add addition oil as needed. The correct oil level should be located at the lower edge of the oil level hole.

For mounting orientations other than shown please consult NORD Gear. Reducer modifications may be required.

Type	M1		M2		M3		M4		M5		M6	
	Quarts	Liters	Quarts	Liters	Quarts	Liters	Quarts	Liters	Quarts	Liters	Quarts	Liters
SK 071.1	0.19	0.18	0.42	0.40	0.40	0.38	0.42	0.40	0.32	0.30	0.32	0.30
SK 072.1	0.17	0.16	0.34	0.32	0.22	0.21	0.24	0.23	0.19	0.18	0.21	0.20
SK 171.1	0.23	0.22	0.42	0.40	0.38	0.36	0.42	0.40	0.35	0.33	0.35	0.33
SK 172.1	0.29	0.27	0.62	0.59	0.44	0.42	0.48	0.45	0.34	0.32	0.41	0.39
SK 371.1	0.37	0.35	0.61	0.58	0.58	0.55	0.61	0.58	0.52	0.49	0.52	0.49
SK 372.1	0.48	0.45	1.10	1.05	0.79	0.75	1.10	1.00	0.63	0.60	0.69	0.65
SK 373.1	0.48	0.45	1.10	1.05	0.79	0.75	1.10	1.00	0.63	0.60	0.69	0.65
SK 571.1	0.51	0.48	0.91	0.86	0.85	0.80	0.97	0.92	0.72	0.68	0.72	0.68
SK 572.1	0.79	0.75	2.00	1.90	1.60	1.50	2.10	2.00	1.20	1.10	1.20	1.15
SK 573.1	0.79	0.75	2.00	1.90	1.60	1.50	2.10	2.00	1.20	1.10	1.20	1.15
SK 672.1	1.20	1.10	2.70	2.60	2.30	2.15	2.90	2.70	1.60	1.55	1.70	1.65
SK 673.1	1.20	1.10	2.70	2.60	2.30	2.15	2.90	2.70	1.60	1.55	1.70	1.65
SK 771.1	0.95	0.90	1.60	1.50	1.30	1.20	1.80	1.70	1.20	1.16	1.20	1.16
SK 772.1	1.40	1.30	4.00	3.80	2.50	2.40	3.40	3.20	1.70	1.60	2.60	2.50
SK 772.1 VL	2.10	2.00	4.00	3.80	2.50	2.40	3.40	3.20	1.70	1.60	2.60	2.50
SK 773.1	2.40	2.30	4.00	3.80	3.50	3.30	3.40	3.20	2.50	2.40	3.30	3.10
SK 773.1 VL	2.40	2.30	4.00	3.80	3.50	3.30	3.40	3.20	2.50	2.40	3.30	3.10
SK 871.1	1.59	1.5	3.38	3.2	3.38	3.2	2.75	2.6	2.43	2.3	2.43	2.3
SK 872.1	3.10	2.90	8.20	7.80	4.90	4.60	6.80	6.40	2.60	2.50	4.20	4.00
SK 872.1 VL	5.30	5.00	8.20	7.80	4.90	4.60	6.80	6.40	2.60	2.50	4.20	4.00
SK 873.1	4.40	4.20	8.20	7.80	6.20	5.90	6.80	6.40	4.30	4.10	6.20	5.90
SK 873.1 VL	4.40	4.20	8.20	7.80	6.20	5.90	6.80	6.40	4.30	4.10	6.20	5.90
SK 971.1	2.01	1.9	4.12	3.9	4.12	3.9	3.59	3.4	3.28	3.1	3.28	3.1
SK 972.1	4.80	4.50	13.00	12.00	7.90	7.50	12.00	11.50	4.40	4.20	7.90	7.50
SK 972.1 VL	9.00	8.50	13.00	12.00	7.90	7.50	12.00	11.50	4.40	4.20	7.90	7.50
SK 973.1	7.90	7.50	13.00	12.00	11.00	10.50	12.00	11.50	7.90	7.50	11.00	10.50
SK 973.1 VL	7.90	7.50	13.00	12.00	11.00	10.50	12.00	11.50	7.90	7.50	11.00	10.50
SK 1071.1	3.49	3.3	7.82	7.4	7.82	7.4	7.08	6.7	5.6	5.3	5.6	5.3

NORDBLOC®.1 FLANGED OIL FILL QUANTITIES

NORDBLOC®.1 Fill Quantities (Flanged)

The following NORD Gear reducers are shipped from the factory with a pre-determined oil fill level in accordance to the specified reducer size and mounting position. For additional information, please refer to the "Oil Plug & Vent Locations" documentation for your gear unit.

IMPORTANT NOTE

Actual oil volume can vary slightly depending upon the gear case size, mounting and ratio. Prior to commissioning the reducer, check the oil-fill level using the reducer's oil level plug and drain or add addition oil as needed. The correct oil level should be located at the lower edge of the oil level hole.

For mounting orientations other than shown please consult NORD Gear. Reducer modifications may be required.

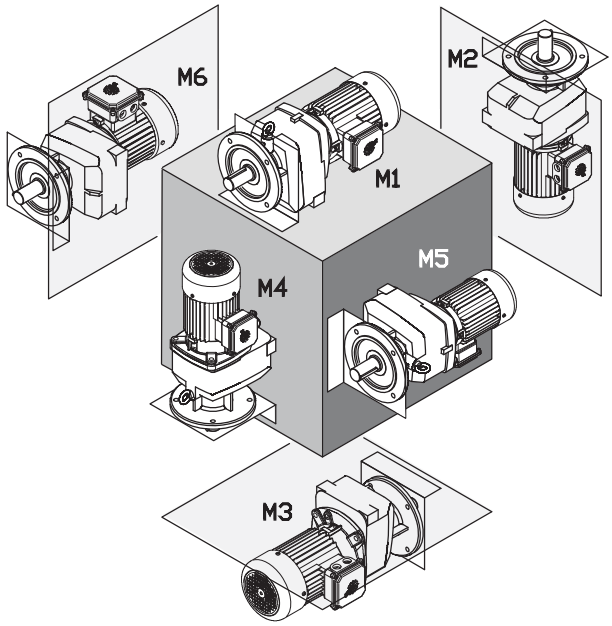

Type	M1		M2		M3		M4		M5		M6	
	Quarts	Liters	Quarts	Liters	Quarts	Liters	Quarts	Liters	Quarts	Liters	Quarts	Liters
SK 071.1 F	0.19	0.18	0.42	0.40	0.40	0.38	0.42	0.40	0.32	0.30	0.32	0.30
SK 072.1 F	0.17	0.16	0.34	0.32	0.22	0.21	0.24	0.23	0.19	0.18	0.21	0.20
SK 171.1 F	0.23	0.22	0.42	0.40	0.38	0.36	0.42	0.40	0.35	0.33	0.35	0.33
SK 172.1 F	0.29	0.27	0.62	0.59	0.44	0.42	0.48	0.45	0.34	0.32	0.41	0.39
SK 371.1 F	0.37	0.35	0.61	0.58	0.58	0.55	0.61	0.58	0.52	0.49	0.52	0.49
SK 372.1 F	0.48	0.45	1.10	1.05	0.79	0.75	1.10	1.00	0.63	0.60	0.69	0.65
SK 373.1 F	0.48	0.45	1.10	1.05	0.79	0.75	1.10	1.00	0.63	0.60	0.69	0.65
SK 571.1 F	0.51	0.48	0.91	0.86	0.85	0.80	0.97	0.92	0.72	0.68	0.72	0.68
SK 572.1 F	0.79	0.75	2.00	1.90	1.60	1.50	2.10	2.00	1.20	1.10	1.20	1.15
SK 573.1 F	0.79	0.75	2.00	1.90	1.60	1.50	2.10	2.00	1.20	1.10	1.20	1.15
SK 672.1 F	1.20	1.10	2.70	2.60	2.30	2.15	2.90	2.70	1.60	1.55	1.70	1.65
SK 673.1 F	1.20	1.10	2.70	2.60	2.30	2.15	2.90	2.70	1.60	1.55	1.70	1.65
SK 771.1 F	0.95	0.90	1.60	1.50	1.30	1.20	1.80	1.70	1.20	1.16	1.20	1.16
SK 772.1 F	1.40	1.30	4.00	3.80	2.50	2.40	3.50	3.30	1.80	1.70	2.50	2.40
SK 772.1 VL F	2.10	2.00	4.00	3.80	2.50	2.40	3.50	3.30	1.80	1.70	2.50	2.40
SK 773.1 F	2.10	2.00	3.70	3.50	3.40	3.20	3.10	2.90	2.40	2.30	3.20	3.00
SK 773.1 VL F	2.10	2.00	3.70	3.50	3.40	3.20	3.10	2.90	2.40	2.30	3.20	3.00
SK 871.1 F	1.59	1.5	3.38	3.2	3.38	3.2	2.75	2.6	2.43	2.3	2.43	2.3
SK 872.1 F	3.40	3.20	7.90	7.50	5.40	5.10	7.10	6.70	2.70	2.60	4.50	4.30
SK 872.1 VL F	5.30	5.00	7.90	7.50	5.40	5.10	7.10	6.70	2.70	2.60	4.50	4.30
SK 873.1 F	4.30	4.10	8.00	7.60	7.30	6.90	7.00	6.60	5.30	5.00	7.00	6.60
SK 873.1 VL F	4.30	4.10	8.00	7.60	7.30	6.90	7.00	6.60	5.30	5.00	7.00	6.60
SK 971.1 F	2.01	1.9	4.12	3.9	4.12	3.9	3.59	3.4	3.28	3.1	3.28	3.1
SK 972.1 F	4.80	4.50	13.00	12.50	8.50	8.00	13.00	12.50	4.80	4.50	8.10	7.70
SK 972.1 VL F	9.00	8.50	13.00	12.50	8.50	8.00	13.00	12.50	4.80	4.50	8.10	7.70
SK 973.1 F	7.80	7.40	13.00	12.20	12.00	11.10	12.00	11.60	8.50	8.00	12.00	10.90
SK 973.1 VL F	7.80	7.40	13.00	12.20	12.00	11.10	12.00	11.60	8.50	8.00	12.00	10.90
SK 1071.1 F	3.49	3.3	7.82	7.4	7.82	7,4	7.08	6.7	5.6	5.3	5.6	5.3

MINICASE® (SM SERIES) WORM GEAR OIL FILL QUANTITIES - FOOT HOUSING

MINICASE® (SM Series) Lubrication

NORD MINICASE® (SM Series) worm gear reducers and worm gearmotors are inherently maintence free, factory oil filled, and supplied with a high quality, long life synthetic gear oil intended to be suitable for the life of the product. These gear units are also supplied without oil service plugs or vents.

Related User Manuals

U10790 MINICASE® (SM Series) Worm – Lubrication Guidelines.
U11040 MINICASE® (SM Series) Worm – Lubrication Types.

IMPORTANT NOTE

For mounting orientations other than shown please consult NORD Gear. Reducer modifications may be required.

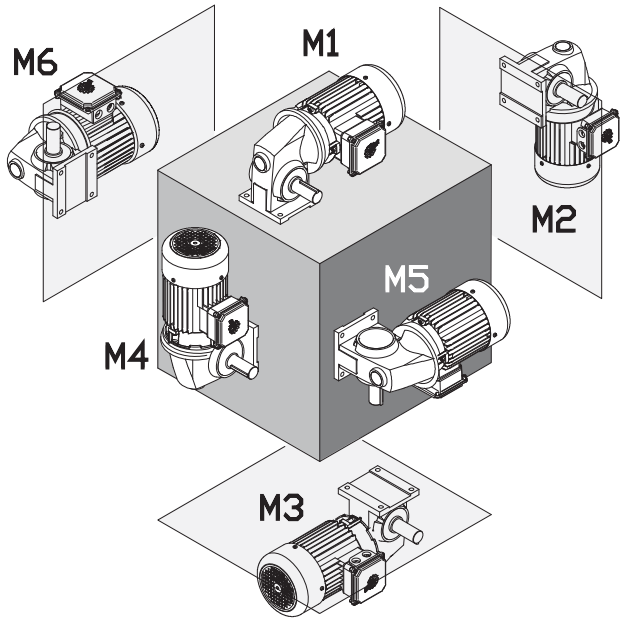

Type	M1		M2		M3		M4		M5		M6	
	oz	ml	oz	ml	oz	ml	oz	ml	oz	ml	oz	ml
SK 1SM31	4.1	120	4.1	120	4.1	120	4.1	120	4.1	120	4.1	120
SK 1SM40	7.4	220	7.4	220	7.4	220	7.4	220	7.4	220	7.4	220
SK 2SM40	11.2	330	11.2	330	11.2	330	12.2	360	11.2	330	11.2	330
SK 1SM50	8.5	250	8.5	250	8.5	250	8.5	250	8.5	250	8.5	250
SK 2SM50	11.8	350	11.8	350	11.8	350	14.2	420	11.8	350	11.8	350
SK 1SM63	14.2	420	14.2	420	14.2	420	14.2	420	14.2	420	14.2	420
SK 2SM63	17.9	530	17.9	530	17.9	530	21.3	630	17.9	530	17.9	530

Oil levels shown apply to any foot-mount gear housings including those ending with no suffix or ending with LX or AX.

MINICASE® (SMI/SMID) WORM GEAR OIL FILL QUANTITIES - FOOT HOUSING

MINICASE® (SMI/SMID Series) Lubrication

NORD MINICASE® (SMI/SMID Series) worm gear reducers and worm gearmotors are inherently maintence free, factory oil filled, and supplied with a high quality, long life synthetic gear oil intended to be suitable for the life of the product. For lubrication types see user manual U11050.

NORD MINICASE® (SMI/SMID Series) worm gear reducers and worm gearmotors are equipped with oil plugs. Venting the gear unit is optional as discussed in user manual U14750.

Related User Manuals

U10800 - MINICASE® (SMI/SMID Series) Worm – Lubrication Guidelines.
U11050 - MINICASE® (SMI/SMID Series) Worm – Lubrication Types
U14750 - MINICASE® (SMI/SMID Series) Worm – Oil Plug Locations

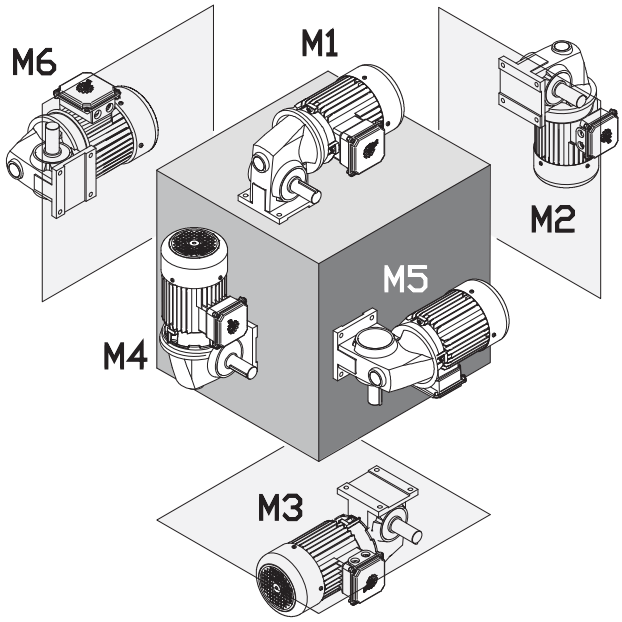

IMPORTANT NOTE

For mounting orientations other than shown please consult NORD Gear. Reducer modifications may be required.

MINICASE® (SMI Series) Gear Reducer Oil Fill - Foot Housing

Type	M1		M2		M3		M4		M5		M6	
	oz	ml	oz	ml	oz	ml	oz	ml	oz	ml	oz	ml
SK 1SMI31	1.5	45	1.5	45	1.5	45	1.5	45	1.5	45	1.5	45
SK 1SMI40	2.7	80	2.7	80	2.7	80	2.7	80	2.7	80	2.7	80
SK 1SMI50	4.4	130	4.4	130	4.4	130	4.4	130	4.4	130	4.4	130
SK 1SMI63	9.1	270	9.1	270	9.1	270	9.1	270	9.1	270	9.1	270
SK 1SMI75	14.2	420	14.2	420	14.2	420	14.2	420	14.2	420	14.2	420

Oil fill level is universal and independent of mounting position
Oil levels shown apply to any foot-mount gear housings including those ending with no-suffix or LX or AX.

MINICASE® (SMID Series) Integral Gearmotor Oil Fill - Foot Housing

Type	M1		M2		M3		M4		M5		M6	
	oz	ml	oz	ml	oz	ml	oz	ml	oz	ml	oz	ml
SK 1SMID31	2.0	60	3.6	105	2.4	70	1.7	50	2.4	70	2.4	70
SK 1SMID40	3.4	100	5.6	165	4.1	120	3.0	90	4.1	120	4.1	120
SK 1SMID50	5.9	175	8.8	260	6.6	195	5.4	160	6.6	195	6.6	195
SK 1SMID63	9.6	285	14.4	425	11.0	325	9.1	270	11.0	325	11.0	325

Oil levels shown apply to any foot-mount gear housings including those ending with no-suffix or LX or AX.

MINICASE® (SM SERIES) WORM GEAR OIL FILL QUANTITIES - FLANGE HOUSING

MINICASE® (SM Series) Lubrication

NORD MINICASE® (SM Series) worm gear reducers and worm gearmotors are inherently maintence free, factory oil filled, and supplied with a high quality, long life synthetic gear oil intended to be suitable for the life of the product. These gear units are also supplied without oil service plugs or vents.

Related User Manuals

U10790 MINICASE® (SM Series) Worm – Lubrication Guidelines.
U11040 MINICASE® (SM Series) Worm – Lubrication Types.

IMPORTANT NOTE

For mounting orientations other than shown please consult NORD Gear. Reducer modifications may be required.

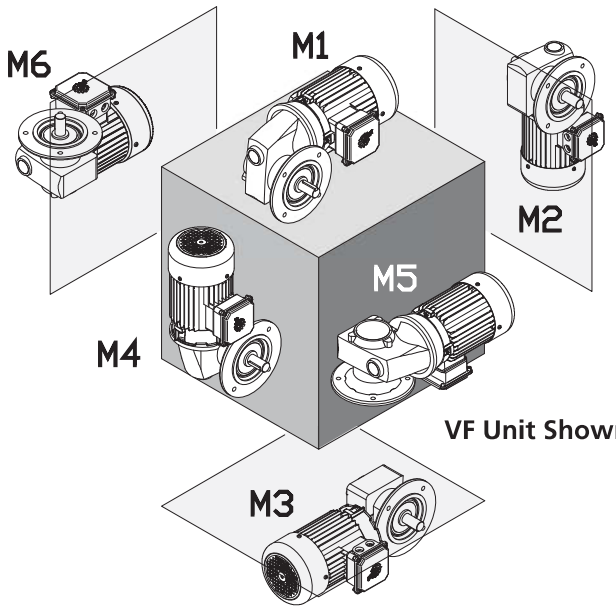

VF Unit Shown

Type	M1		M2		M3		M4		M5		M6	
	oz	ml	oz	ml	oz	ml	oz	ml	oz	ml	oz	ml
SK 1SM31	4.4	130	4.4	130	4.4	130	4.4	130	4.4	130	4.4	130
SK 1SM40	8.1	240	8.1	240	8.1	240	8.1	240	8.1	240	8.1	240
SK 2SM40	11.5	340	11.5	340	11.5	340	12.8	380	11.5	340	11.5	340
SK 1SM50	9.1	270	9.1	270	9.1	270	9.1	270	9.1	270	9.1	270
SK 2SM50	12.5	370	12.5	370	12.5	370	15.2	450	12.5	370	12.5	370
SK 1SM63	15.2	450	15.2	450	15.2	450	15.2	450	15.2	450	15.2	450
SK 2SM63	20.3	600	20.3	600	20.3	600	24.7	730	20.3	600	20.3	600

Oil Levels shown apply to flange-mount gear housings with model type ending in AZ, AF, VZ or VF.

MINICASE® (SMI/SMID) WORM GEAR OIL FILL QUANTITIES - FLANGE HOUSING

MINICASE® (SMI/SMID Series) Lubrication

NORD MINICASE® (SMI/SMID Series) worm gear reducers and worm gearmotors are inherently maintence free, factory oil filled, and supplied with a high quality, long life synthetic gear oil intended to be suitable for the life of the product. For lubrication types see user manual U11050.

NORD MINICASE® (SMI/SMID Series) worm gear reducers and worm gearmotors are equipped with oil plugs. Venting the gear unit is optional as discussed in user manual U14750.

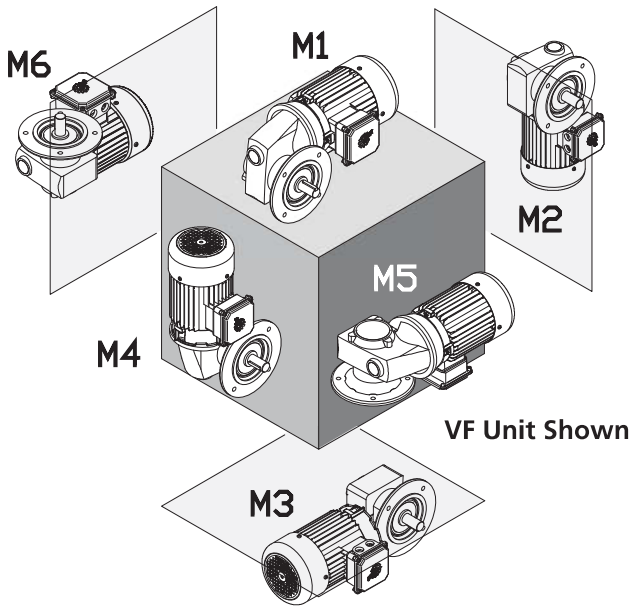

VF Unit Shown

Related User Manuals

U10800 - MINICASE® (SMI/SMID Series) Worm – Lubrication Guidelines.
U11050 - MINICASE® (SMI/SMID Series) Worm – Lubrication Types
U14750 - MINICASE® (SMI/SMID Series) Worm – Oil Plug Locations

IMPORTANT NOTE

For mounting orientations other than shown please consult NORD Gear. Reducer modifications may be required.

MINICASE® (SMI Series) Gear Reducer Oil Fill - Flange Housing

Type	M1		M2		M3		M4		M5		M6	
	oz	ml	oz	ml	oz	ml	oz	ml	oz	ml	oz	ml
SK 1SMI31	1.5	45	1.5	45	1.5	45	1.5	45	1.5	45	1.5	45
SK 1SMI40	2.7	80	2.7	80	2.7	80	2.7	80	2.7	80	2.7	80
SK 1SMI50	4.4	130	4.4	130	4.4	130	4.4	130	4.4	130	4.4	130
SK 1SMI63	9.1	270	9.1	270	9.1	270	9.1	270	9.1	270	9.1	270
SK 1SMI75	14.2	420	14.2	420	14.2	420	14.2	420	14.2	420	14.2	420

Oil Fill is universal and independent of mounting position.
Oil Levels shown apply to flange-mount gear housings with model type ending in AZ, AF, VZ or VF.

MINICASE® (SMID Series) Integral Gearmotor Oil Fill - Flange Housing

Type	M1		M2		M3		M4		M5		M6	
	oz	ml	oz	ml	oz	ml	oz	ml	oz	ml	oz	ml
SK 1SMID31	2.0	60	3.6	105	2.4	70	1.7	50	2.4	70	2.4	70
SK 1SMID40	3.4	100	5.6	165	4.1	120	3.0	90	4.1	120	4.1	120
SK 1SMID50	5.9	175	8.8	260	6.6	195	5.4	160	6.6	195	6.6	195
SK 1SMID63	9.6	285	14.4	425	11.0	325	9.1	270	11.0	325	11.0	325

Oil Levels shown apply to flange-mount gear housings with model type ending in AZ, AF, VZ or VF.

FLEXBLOC™ (SI/SID SERIES) WORM GEAR OIL FILL QUANTITIES

FLEXBLOC™ (SI/SID Series) Lubrication

NORD FLEXBLOC™ worm gear reducers are inherently maintence free, factory oil filled, and supplied with a high quality, long life synthetic gear oil intended to be suitable for the life of the product. For lubrication types see User Manual U11060.

NORD FLEXBLOC™ worm gear reducers are equipped with oil plugs. Venting the gear unit is optional as discussed in User Manual U14800.

Related User Manuals

U10810 FLEXBLOC™ (SI/SID Series) Worm – Lubrication Guidelines
U11060 FLEXBLOC™ Worm (SI/SID Series) – Lubrication Types
U14800 FLEXBLOC™ Worm (SI/SID Series) – Oil Plug Locations

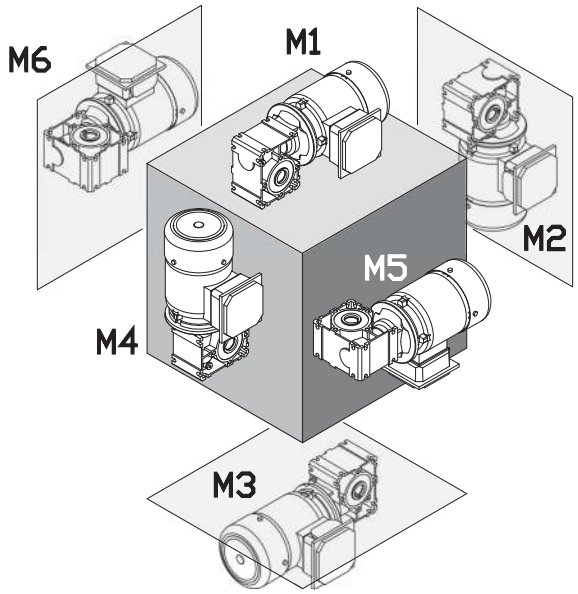

FLEXBLOC™ (SI Series) Gear Reducer Oil Fill

Type	M1		M2		M3		M4		M5		M6	
	oz	ml	oz	ml	oz	ml	oz	ml	oz	ml	oz	ml
SK 1SI31	1.0	30	1.0	30	1.0	30	1.0	30	1.0	30	1.0	30
SK 1SI40	1.9	55	1.9	55	1.9	55	1.9	55	1.9	55	1.9	55
SK 1SI50	3.2	95	3.2	95	3.2	95	3.2	95	3.2	95	3.2	95
SK 1SI63	6.1	180	6.1	180	6.1	180	6.1	180	6.1	180	6.1	180
SK 1SI75	12.2	360	12.2	360	12.2	360	12.2	360	12.2	360	12.2	360

Oil Fill is universal and independent of mounting position.

FLEXBLOC™ (SID Series) Gear Reducer Oil Fill

Type	M1		M2		M3		M4		M5		M6	
	oz	ml	oz	ml	oz	ml	oz	ml	oz	ml	oz	ml
SK 1SID31	1.7	50	3.0	90	2.4	70	1.7	50	2.4	70	2.4	70
SK 1SID40	3.0	90	5.1	150	3.7	110	2.7	80	4.1	120	4.1	120
SK 1SID50	5.7	170	6.8	200	5.7	170	5.1	150	6.1	180	6.1	180
SK 1SID63	9.8	280	12.2	360	9.8	290	8.1	240	10.5	310	10.5	310

Integral gear motors only available upon special request.

STANDARD IN-LINE OIL PLUG & VENT LOCATIONS

Oil plug connections

All reducers are shipped from the factory with a pre-determined oil fill level in accordance to the specified reducer size and mounting position. ***For mounting orientations other than shown please consult NORD Gear. New plug locations may be required.***

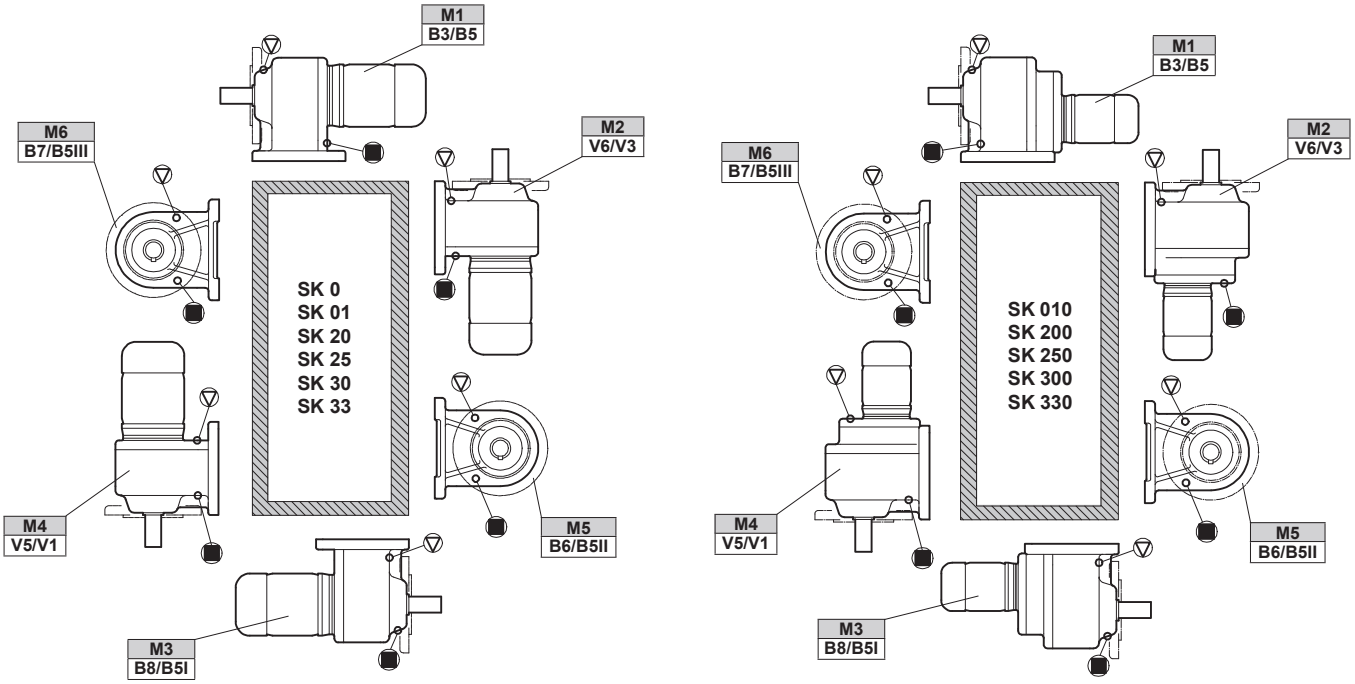

▽ = Vent

■ = Oil Plug

HELICAL IN-LINE OIL PLUG & VENT LOCATIONS

Oil plug connections

Prior to commissioning the reducer, check the oil-fill level using the reducer's oil-level plug and drain or add additional oil as needed. The minimum acceptable oil level is 0.15 in (4mm) below the oil level hole. ***For mounting orientations other than shown please consult NORD Gear. New plug locations may be required.***

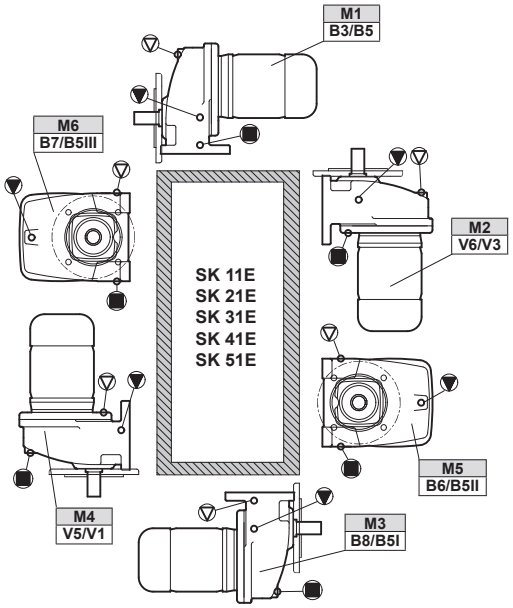

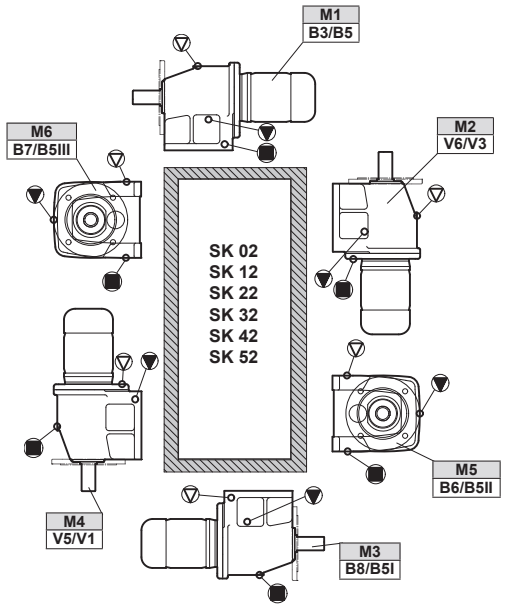

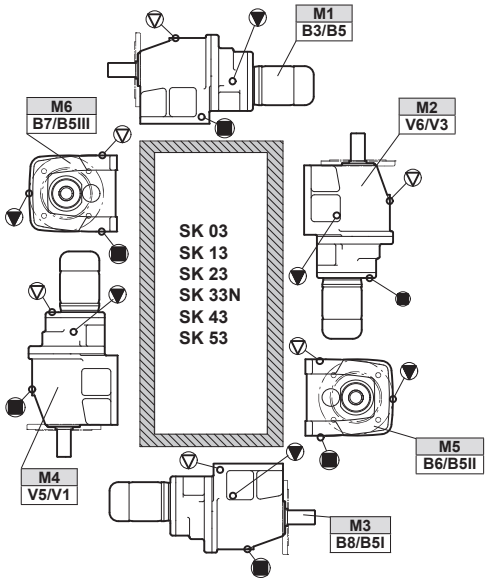

▽ = Vent

▼ = Oil Level

■ = Oil Plug

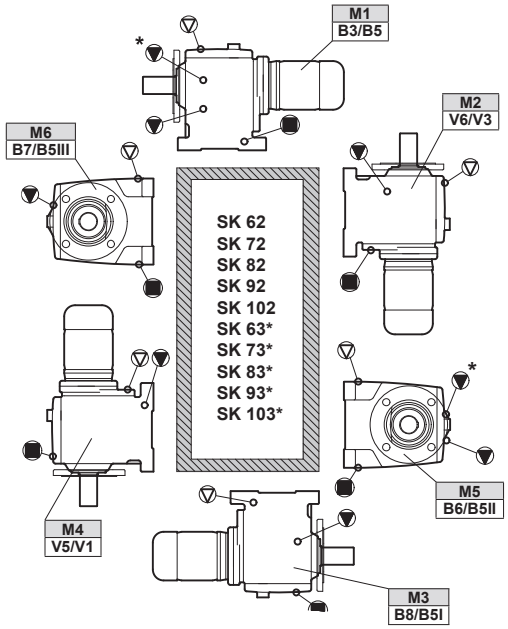

*** Oil level for 3 stage gear units.**

NORD Gear Limited
Toll Free in Canada: 800.668.4378

NORD Gear Corporation
Toll Free in the United States: 888.314.6673

CLINCHER™
OIL PLUG & VENT LOCATIONS

Oil plug connections

Prior to commissioning the reducer, check the oil-fill level using the reducer's oil-level plug and drain or add additional oil as needed. The minimum acceptable oil level is 0.15 in (4mm) below the oil level hole. ***For mounting orientations other than shown please consult NORD Gear. New plug locations may be required.***

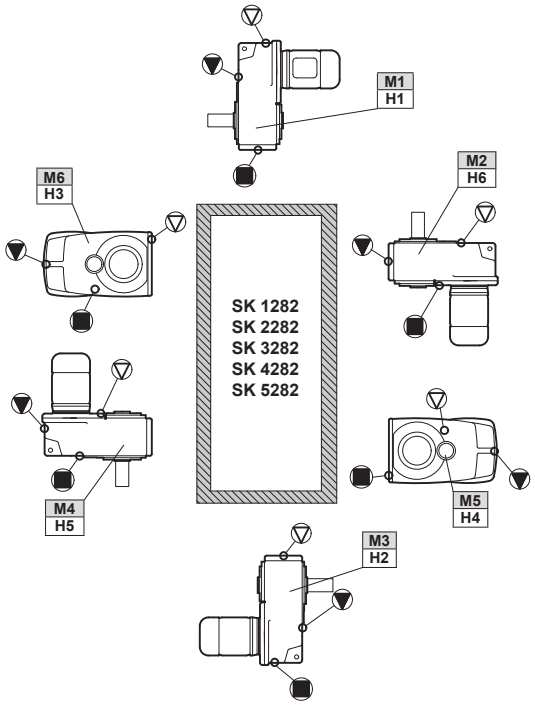

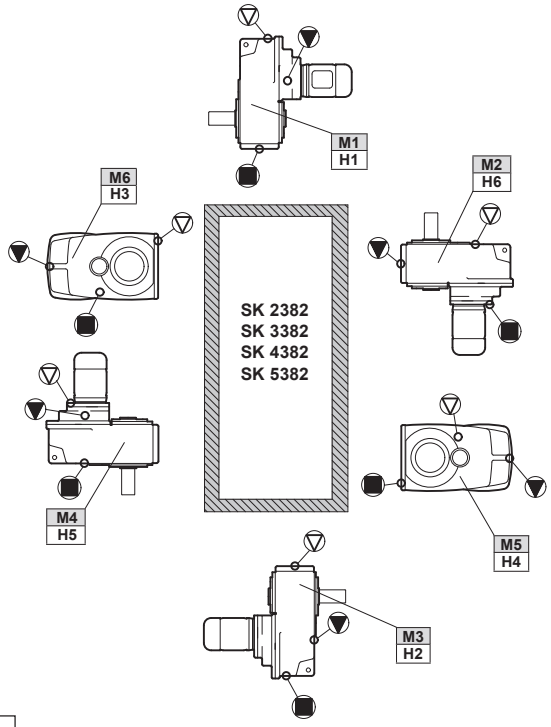

▽ = Vent

▼ = Oil Level

■ = Oil Plug

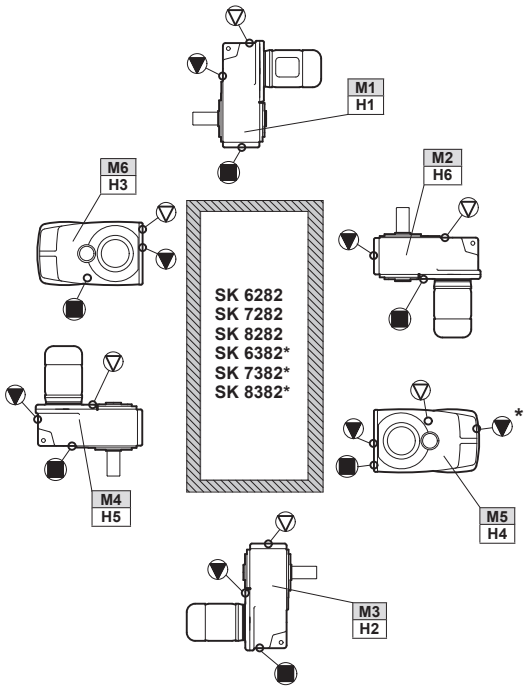

* Oil level for 3 stage gear units

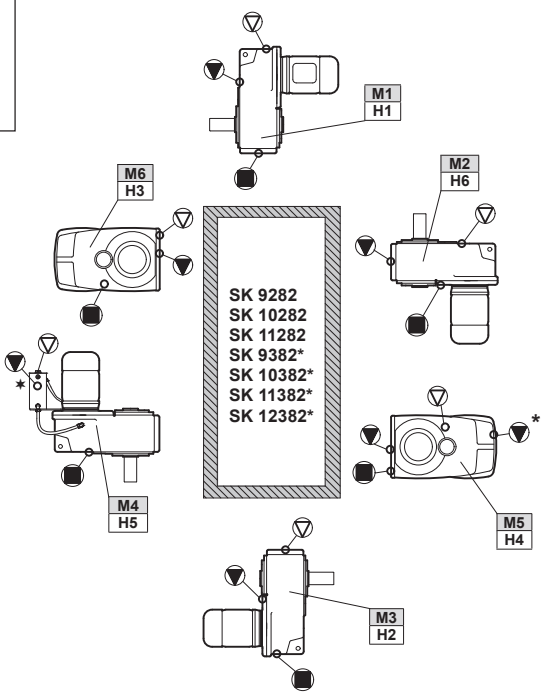

* Oil level for 3 stage gear units

∗ Oil fill level should be verified using the dip stick located in the oil tank for the M4/H5 position.

NORD Gear Limited
Toll Free in Canada: 800.668.4378

NORD Gear Corporation
Toll Free in the United States: 888.314.6673

Oil plug connections

Prior to commissioning the reducer, check the oil-fill level using the reducer's oil-level plug and drain or add additional oil as needed. The minimum acceptable oil level is 0.15 in (4mm) below the oil level hole. ***For mounting orientations other than shown please consult NORD Gear. New plug locations may be required.***

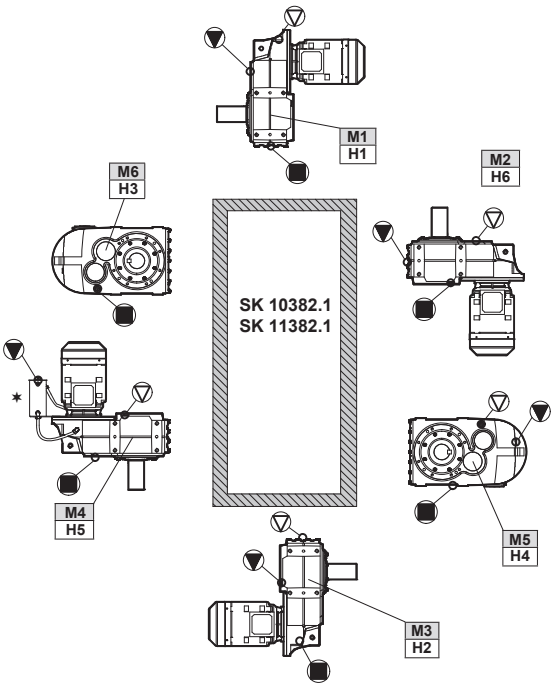

∗ Oil fill level should be verified using the dip stick located in the oil tank for the M4/H5 position.

▽ = Vent

▼ = Oil Level

■ = Oil Plug

92 SERIES HELICAL-BEVEL OIL PLUG & VENT LOCATIONS

Oil plug connections

Prior to commissioning the reducer, check the oil-fill level using the reducer's oil-level plug and drain or add additional oil as needed. The minimum acceptable oil level is 0.15 in (4mm) below the oil level hole. ***For mounting orientations other than shown please consult NORD Gear. New plug locations may be required.***

Foot Mount

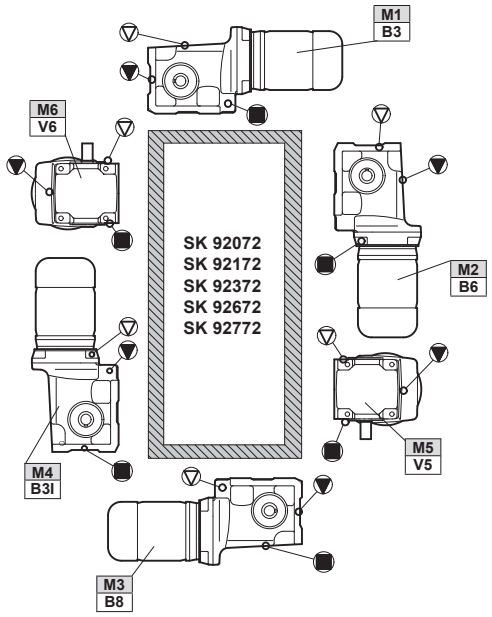

Shaft/Flange Mount

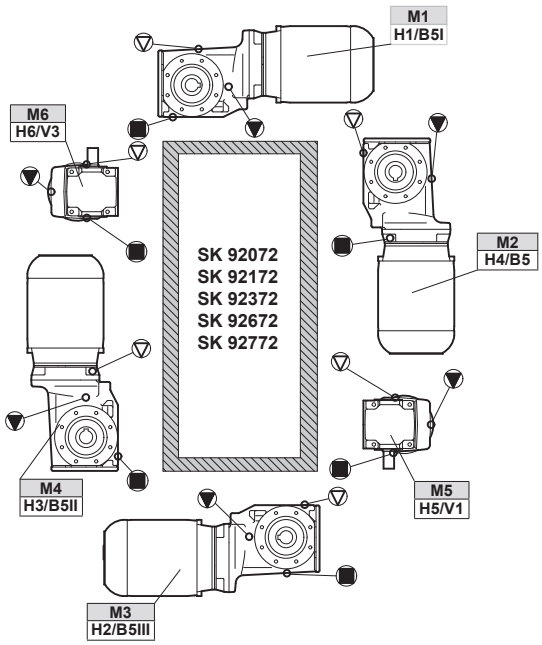

▽ = Vent

▼ = Oil Level

■ = Oil Plug

92.1/93.1 SERIES HELICAL-BEVEL OIL PLUG & VENT LOCATIONS

Oil plug locations

Prior to commissioning the reducer, check the oil-fill level using the reducer's oil-level plug and drain or add additional oil as needed. ***For mounting orientations other than shown please consult NORD Gear. New plug locations may be required.***

92.1 Series

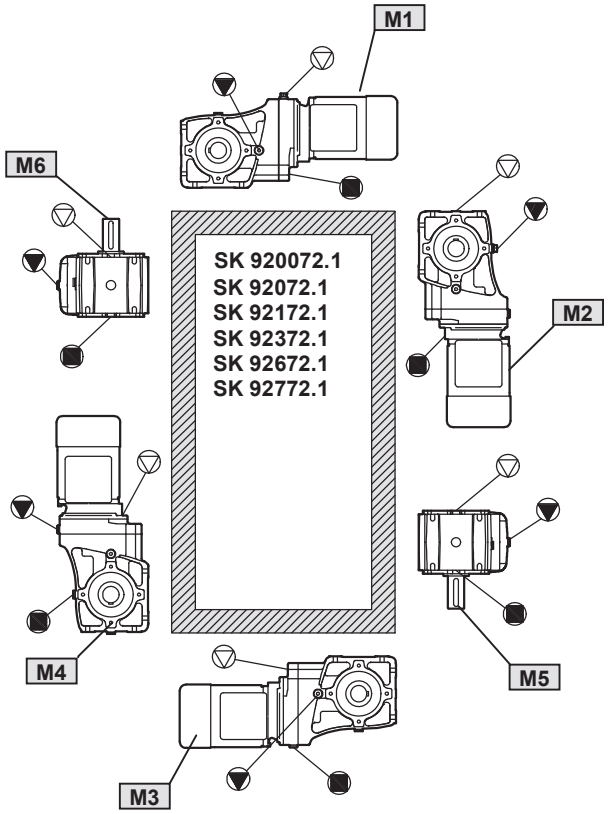

93.1 Series

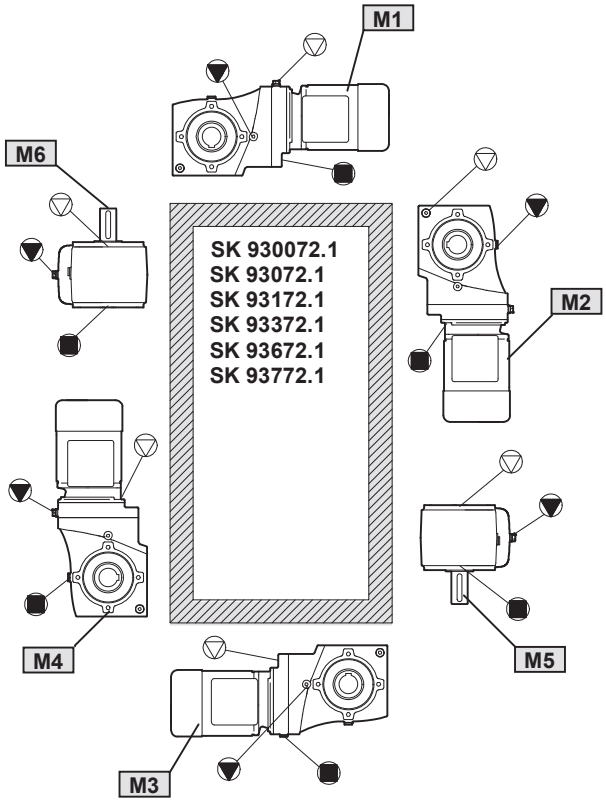

▽ = Vent

▼ = Oil Level

■ = Oil Plug

90.1 HELICAL-BEVEL OIL PLUG & VENT LOCATIONS

DRIVESYSTEMS — RETAIN FOR FUTURE USE — U14400 - 1 of 1

Oil plug connections

Prior to commissioning the reducer, check the oil-fill level using the reducer's oil-level plug and drain or add additional oil as needed. The minimum acceptable oil level is 0.15 in (4mm) below the oil level hole. ***For mounting orientations other than shown please consult NORD Gear. New plug locations may be required.***

Foot Mount

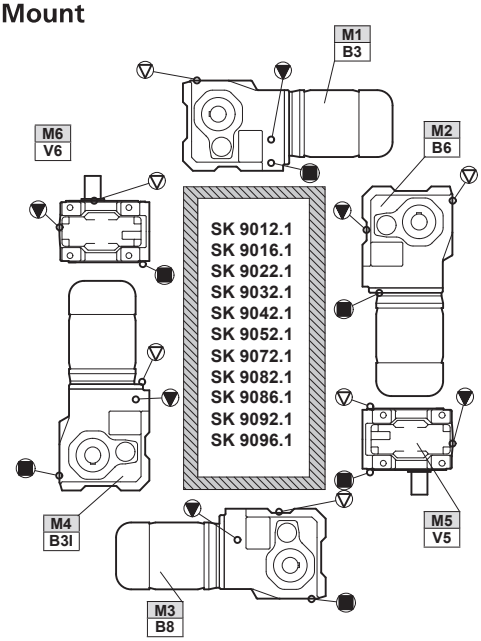

Foot Mount

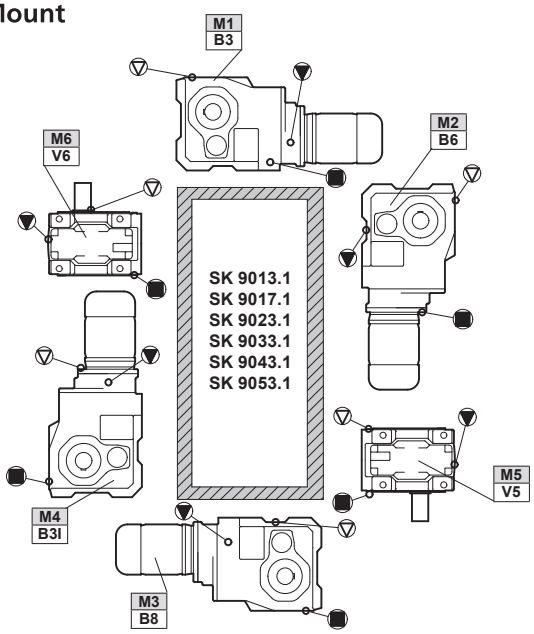

Shaft/Flange Mount

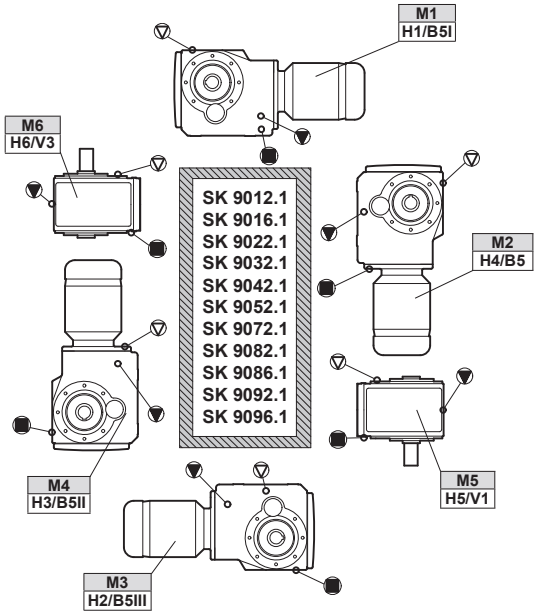

Shaft/Flange Mount

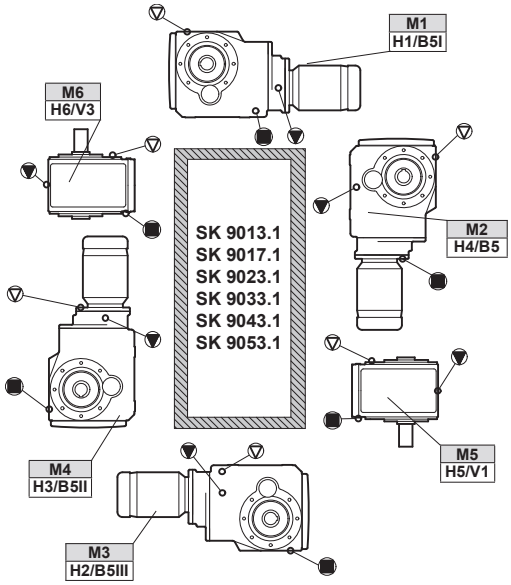

▽ = Vent

▼ = Oil Level

■ = Oil Plug

NORD Gear Limited
Toll Free in Canada: 800.668.4378

NORD Gear Corporation
Toll Free in the United States: 888.314.6673

CONVEYOR DRIVE
OIL PLUG & VENT LOCATIONS

Oil Plug Locations

The NORD SK 9055 and SK 9155 Conveyor Drive reducers are designed to be output flange mounted. The following charts detail the six basic mounting positions for the SK 9055 and SK 9155 gear units. The standard or most typical mounting position is M5.

All SK 9055 and SK 9155 NORD gear reducers are shipped from the factory with a pre-determined oil fill level in accordance to the specified reducer size and mounting position. The mounting position also determines the position of the oil drain, oil fill and oil vent locations on the gear unit. SK 9155/42 and SK 9155/32 compound gear unit assemblies have separate oil sump areas.

Prior to commissioning the reducer, check the oil-fill level using the reducer's oil-level plug and drain or add additional oil as needed. The minimum acceptable oil level is 0.15 in (4mm) below the oil level hole. ***For mounting orientations other than shown please consult NORD Gear. New plug locations may be required.***

SK 9055 (3 Stage)

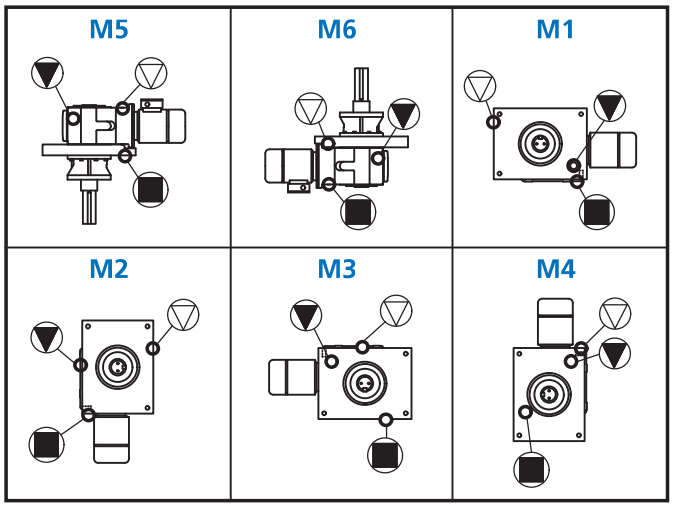

SK 9055 (4 Stage)

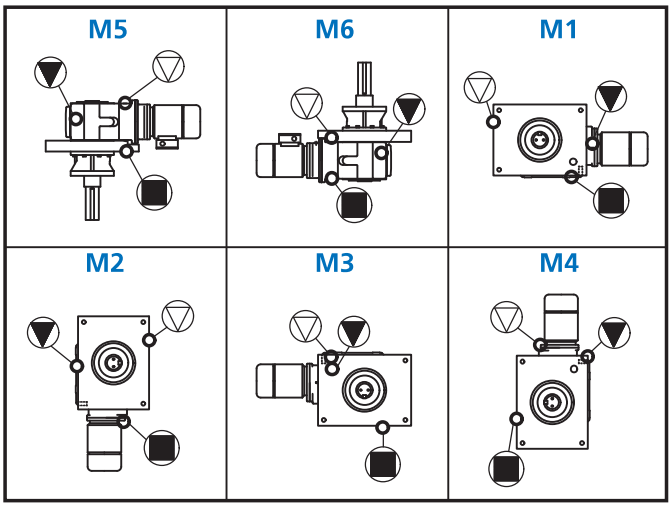

SK 9155

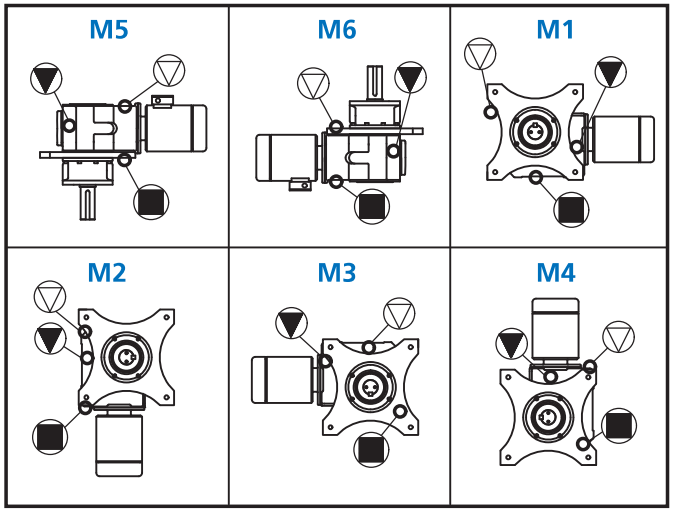

SK 9155/42

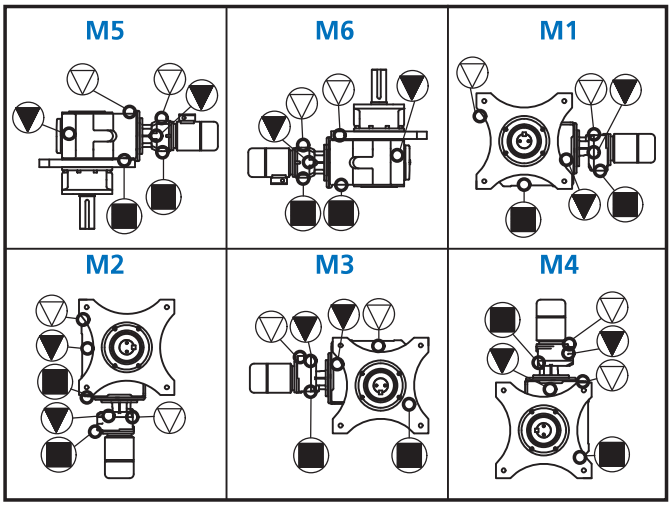

For mounting positions other than shown, please consult NORD Gear.

▽ = Vent

▼ = Oil Level

■ = Oil Plug

NORD Gear Limited
Toll Free in Canada: 800.668.4378

NORD Gear Corporation
Toll Free in the United States: 888.314.6673

HELICAL-WORM
OIL PLUG & VENT LOCATIONS

Oil plug connections

Prior to commissioning the reducer, check the oil-fill level using the reducer's oil-level plug and drain or add additional oil as needed. The minimum acceptable oil level is 0.15 in (4mm) below the oil level hole. **For mounting orientations other than shown please consult NORD Gear. New plug locations may be required.**

Foot Mount

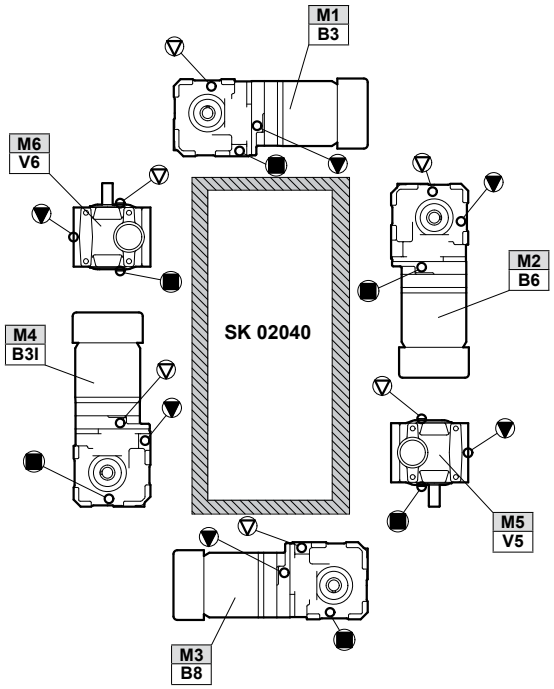

Shaft/Flange Mount

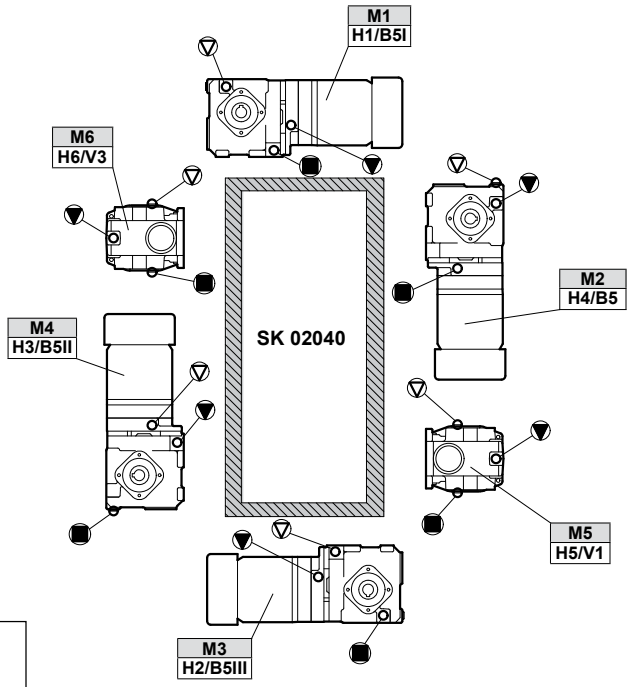

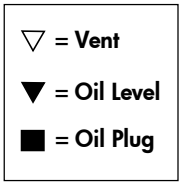

HELICAL-WORM OIL PLUG & VENT LOCATIONS

Foot Mount

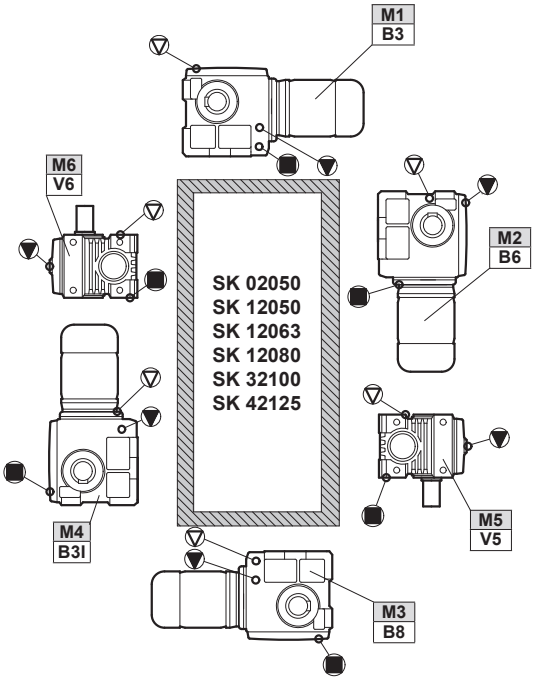

Foot Mount

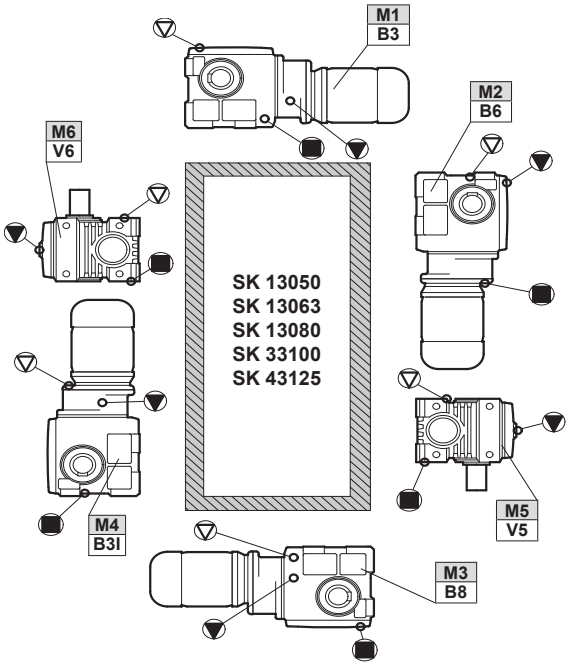

Shaft/Flange Mount

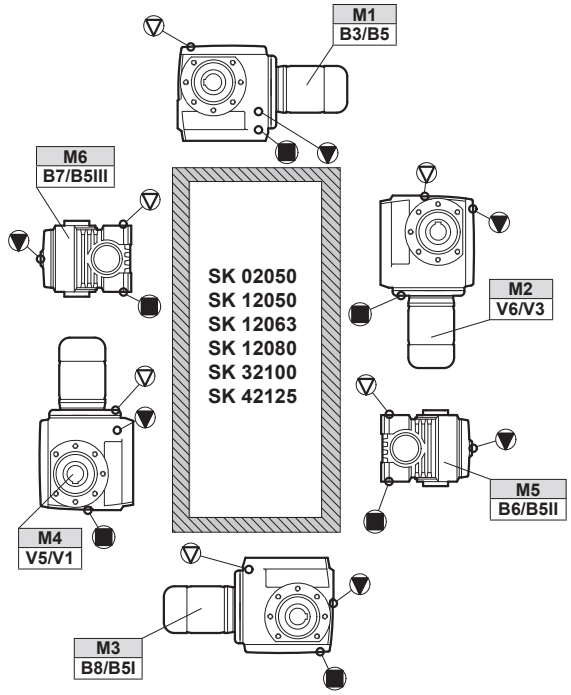

Shaft/Flange Mount

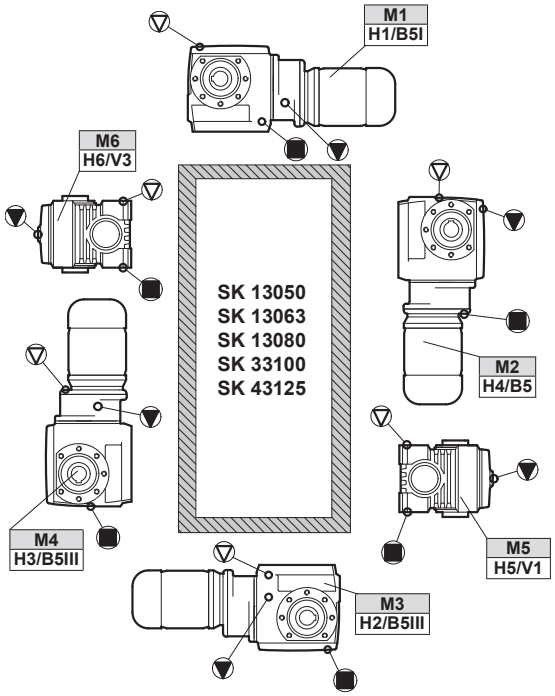

▽ = Vent

▼ = Oil Level

■ = Oil Plug

NORD Gear Limited
Toll Free in Canada: 800.668.4378

NORD Gear Corporation
Toll Free in the United States: 888.314.6673

NORDBLOC®
OIL PLUG & VENT LOCATIONS

Oil plug connections

Prior to commissioning the reducer, check the oil-fill level using the reducer's oil-level plug and drain or add additional oil as needed. The minimum acceptable oil level is 0.15 in (4mm) below the oil level hole. ***For mounting orientations other than shown please consult NORD Gear. New plug locations may be required.***

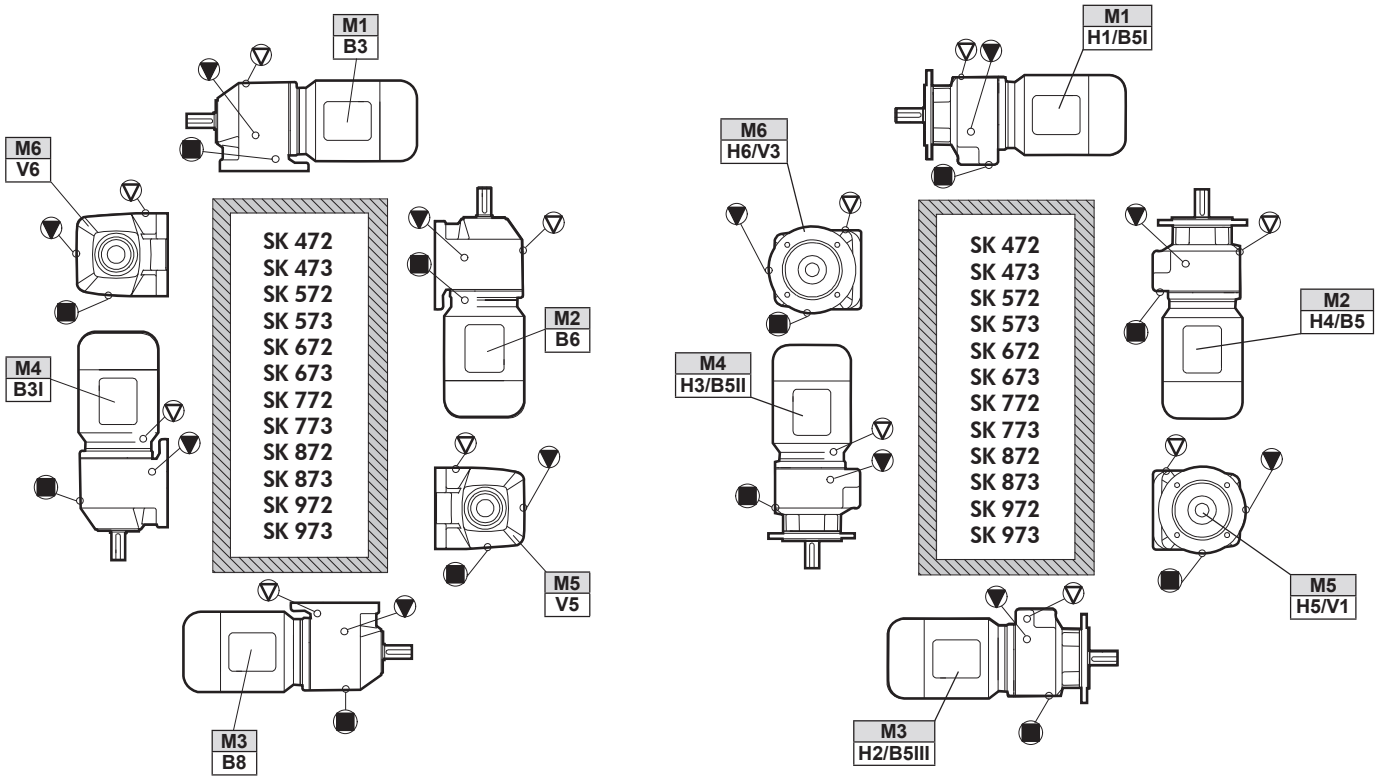

NORDBLOC®.1
OIL PLUG & VENT LOCATIONS

Oil plug connections

Prior to commissioning the reducer, check the oil-fill level using the reducer's oil-level plug and drain or add additional oil as needed. The correct oil level should be located at the lower edge of the oil level hole. ***For mounting orientations other than shown please consult NORD Gear. New plug locations may be required.***

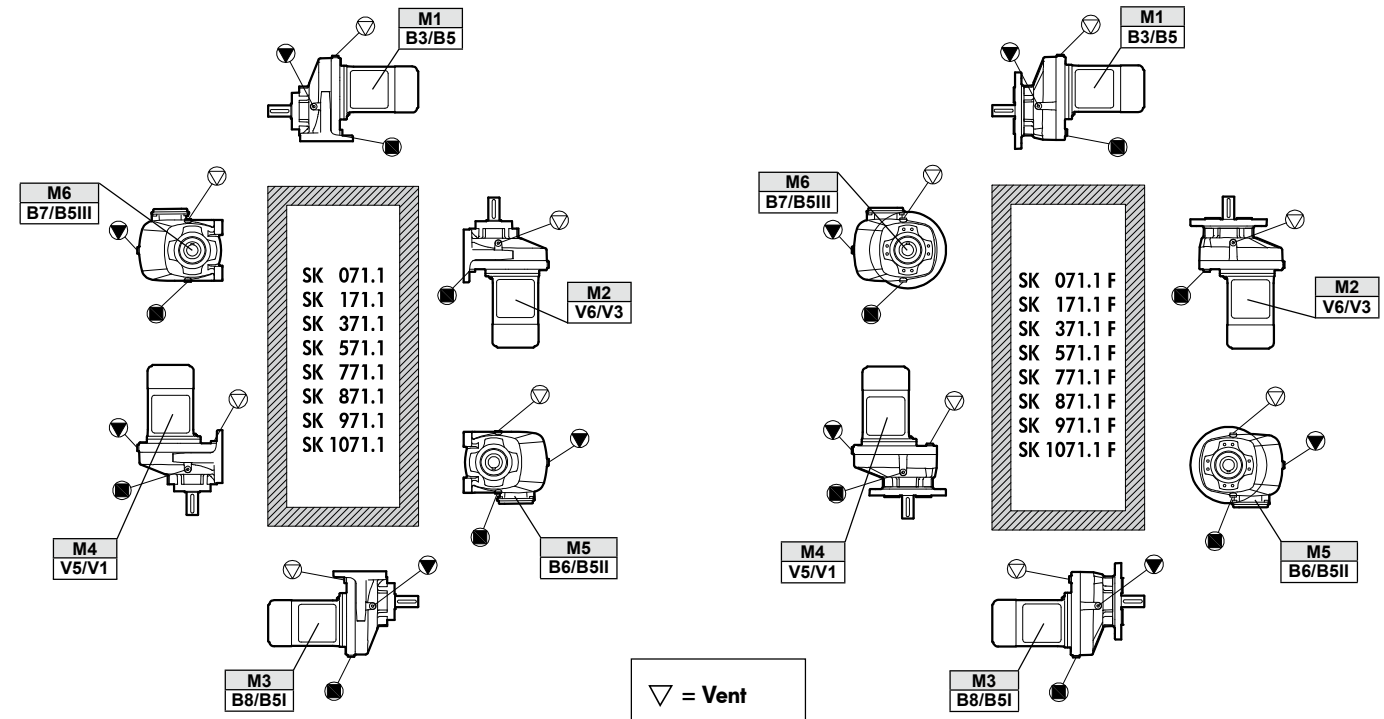

NORD Gear Limited
Toll Free in Canada: 800.668.4378

NORD Gear Corporation
Toll Free in the United States: 888.314.6673

NORDBLOC®.1
OIL PLUG & VENT LOCATIONS

Oil plug connections

Prior to commissioning the reducer, check the oil-fill level using the reducer's oil-level plug and drain or add additional oil as needed. The correct oil level should be located at the lower edge of the oil level hole. ***For mounting orientations other than shown please consult NORD Gear. New plug locations may be required.***

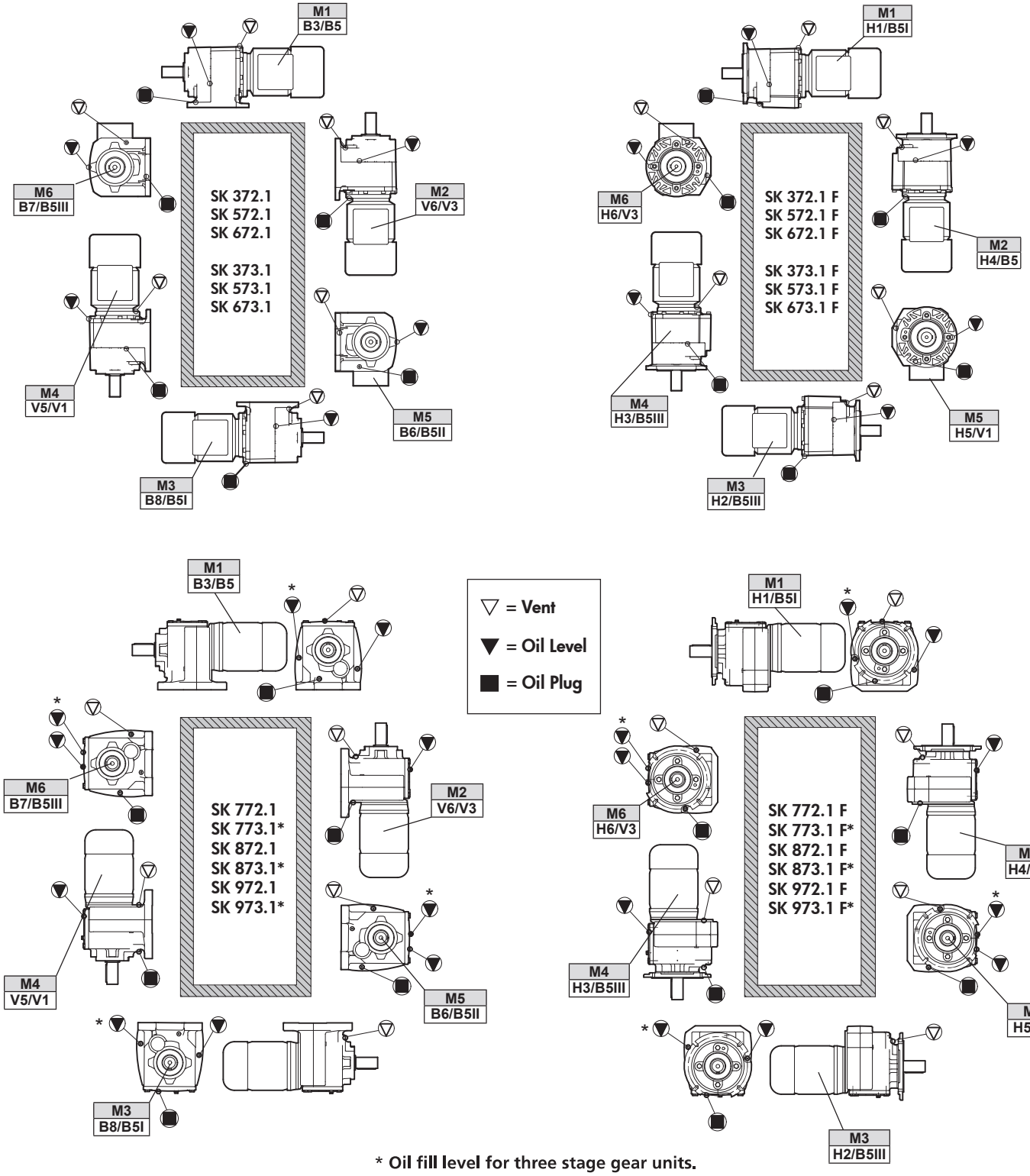

* Oil fill level for three stage gear units.

NORD Gear Limited
Toll Free in Canada: 800.668.4378

NORD Gear Corporation
Toll Free in the United States: 888.314.6673

MINICASE® (SMI/SMID) WORM GEAR OIL PLUG & VENT LOCATIONS

DRIVESYSTEMS — RETAIN FOR FUTURE USE — U14750 - 1 of 1

Oil Plug and Vent Locations

MINICASE® (SMI/SMID) reducers and gear motors are fitted with oil plugs to allow for optional venting of the gear unit. NORD can supply either an AUTOVENT™ (valve-type) vent or an open vent. Vent options are available for most gear unit sizes and positions as indicated by the table below. For more complete details on vent options and when to consider reducer venting, see user manual U10800.

Vent Compatability by Unit Size & Mounting Position

	M1	M2	M3	M4	M5	M6
SMI/SMID 31		✓	✓	✓		✓
SMI/SMID 40		✓	✓	✓		✓
SMI/SMID 50	✓	✓	✓	✓		✓
SMI/SMID 63	✓	✓	✓	✓	✓	✓
SMI/SMID 75	✓	✓	✓	✓		✓

Continuous Input speed ≤ 1800 rpm

Vent Kit Part Numbers

Type	Transportation Seal	Installation	Part Number
AUTOVENT™	Included	Factory or Field site	60693510
Open Vent	None	Field Only	60693500
Open Vent	Included	Factory or Field site	22008004 (vent) 25308120 (gasket)

Unless noted by a seperate part number, vent kits include the housing gasket



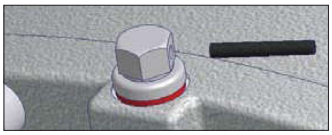

Optional Vent Locations

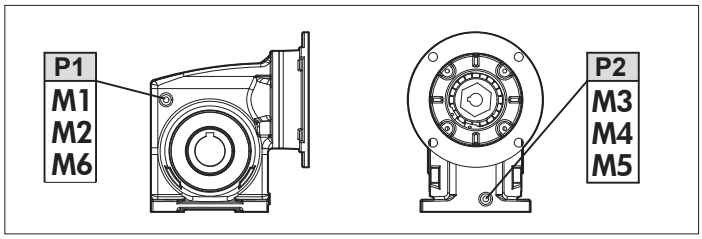

NOTICE

To prevent build-up of excessive pressure, sealed vents must be activated as shown prior to gear unit start-up. Excessive pressure may cause damage to internal components and cause leakage.

MINICASE® (SMI/SMID) Foot Housing

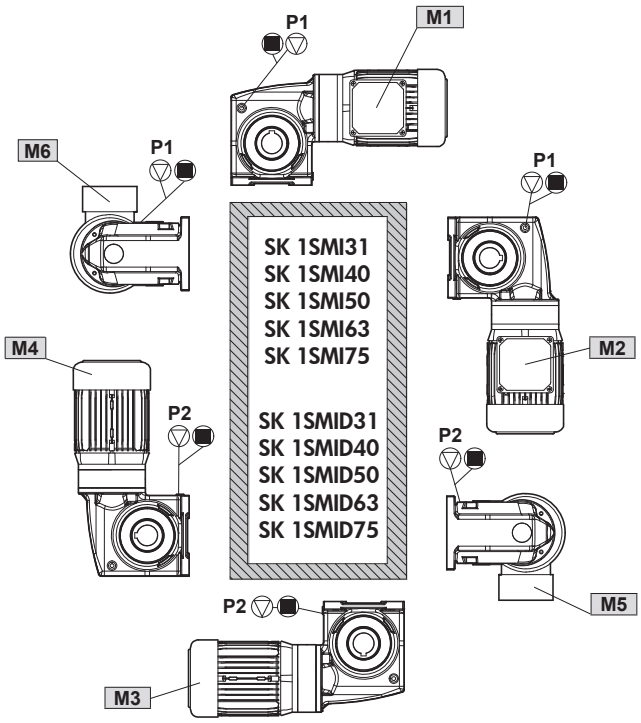

MINICASE® (SMI/SMID) Flange Housing

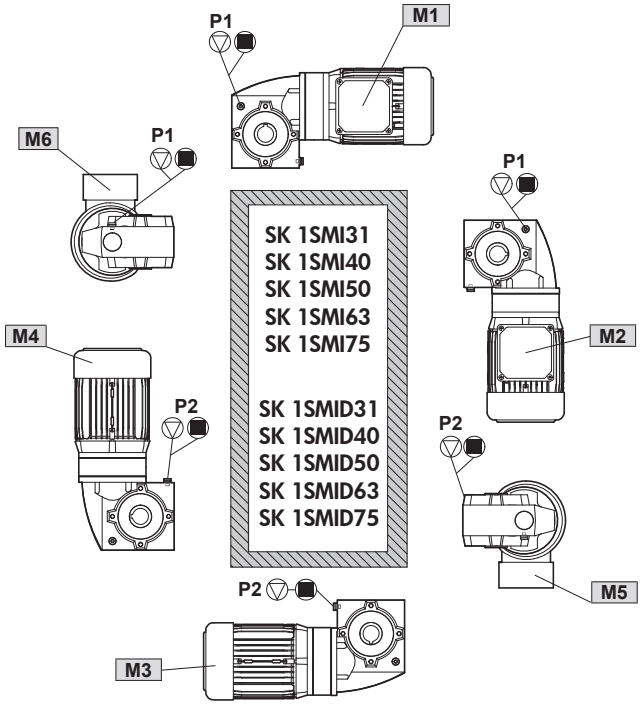

▽ = Vent
■ = Oil Plug

NORD Gear Limited
Toll Free in Canada: 800.668.4378

NORD Gear Corporation
Toll Free in the United States: 888.314.6673

FLEXBLOC™ (SI/SID SERIES) WORM GEAR OIL PLUG & VENT LOCATIONS

Vent locations

FLEXBLOC™ (SI?SID SERIES) reducers are fitted with oil plugs to allow for optional venting of the gear unit. NORD can supply either an AUTOVENT™ (valve-type) vent or an open vent. Vent options are available for most gear unit sizes and positions as indicated by the table below. For more complete details on vent options and when to consider reducer venting, see user manual U10810.

Vent Compatability by Unit Size & Mounting Position

	M1	M2	M3	M4	M5	M6
SI/SID 31		✓	✓	✓		✓
SI/SID 40		✓	✓	✓		✓
SI/SID 50	✓	✓	✓	✓		✓
SI/SID 63	✓	✓	✓	✓	✓	✓
SI/SID 75	✓	✓	✓	✓		✓

Continuous Input speed ≤ 1800 rpm

Vent Kit Part Numbers

Type	Transportation Seal	Installation	Part Number
AUTOVENT™	Included	Factory or Field site	66093510
Open Vent	None	Field Only	60693500
Open Vent	Included	Factory or Field site	22008004 (vent) 25308120 (gasket)

Unless noted by a seperate part number, vent kits include the housing gasket



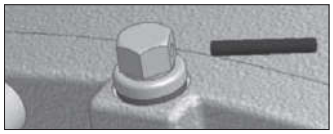

Optional Vent Locations

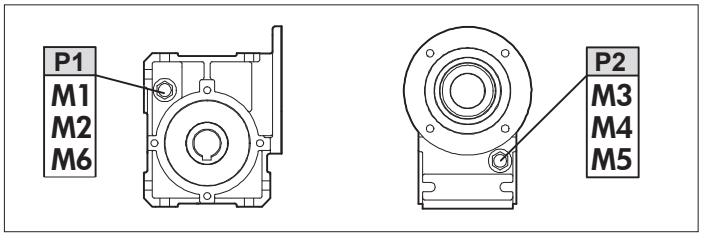

FLEXBLOC™ (SI Series) Universal Housing

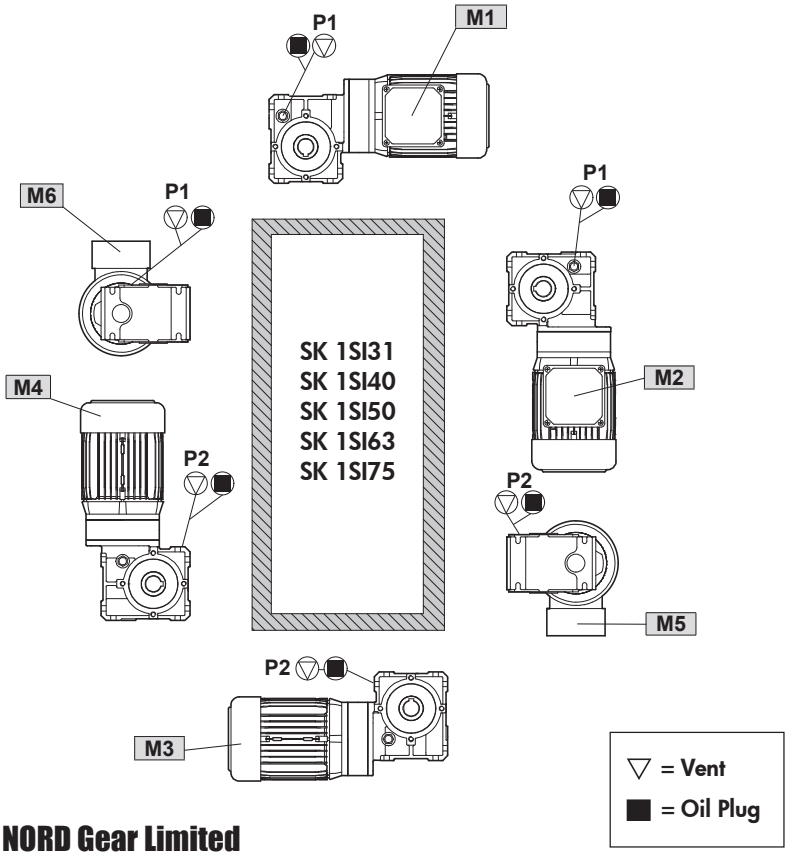

NOTICE

To prevent build-up of excessive pressure, sealed vents must be activated as shown prior to gear unit start-up. Excessive pressure may cause damage to internal components and cause leakage.

Troubleshooting

This section identifies some of the most common issues involved with NORD Gear speed reducers , and provides recommendations to assist you in defining and answering your questions as you work with our products. You may also contact our Engineering/Application departments if your questions are not answered in the table below.

Problem With the Reducer		Possible Causes	Suggested Remedy
Runs Hot	Overloading	Load exceeds the capacity of the reducer	Check rated capacity of reducer, replace with unit of sufficient capacity or reduce the load.
	Improper lubrication	Insufficient lubrication	Check lubricant level and adjust up to recommended levels
		Excessive lubrication	Check lubricant level and adjust down to recommended levels.
		Wrong lubrication	Flush out and refill with correct lubricant as recommended
Runs Noisy	Loose foundation bolts	Weak mounting structure	Inspect mounting of reducer. Tighten loose bolts and/or reinforce mounting and structure.
		Loose hold down bolts	Tighten bolts
	Failure of bearings	May be due to lack of lubricant	Replace bearing. Clean and flush reducer and fill with recommended lubricant.
		Overload	Check rated capacity of reducer.
	Insufficient lubricant	Level of lubricant in reducer not properly maintained.	Check lubricant level and adjust to factory recommended level.
Output shaft does not turn	Internal parts are broken or missing	Overloading of reducer can cause damage	Replace broken parts. Check rated capacity of reducer.
		Key missing or sheared off on input shaft.	Replace key.
		Coupling loose or disconnected	Properly allign reducer and coupling. Tighten coupling.
Oil Leakage	Worn seals	Caused by dirt or grit entering seal.	Replace seals. Autovent may be clogged. Replace or clean.
	Unit runs hot or leaks	Overfilled reducer	Check lubricant level and adjust to recommended level.
		Vent clogged.	Clean or replace, being sure to prevent any dirt from falling into the reducer.
	Incorrect fill level	Improper mounting position, such as wall or ceiling mount of horizontal reducer.	Check mounting position on the name tag & verify with mounting chart in manual.

TITAN™ ADJUSTABLE SPEED DRIVES

1. Basic operation and speed adjustment

WARNING

Lock-out power before any maintenance is performed. Make absolutely sure that no voltage is applied while work is being done on the drive unit.

Titan™ Adjustable-Speed Drives are ideal for use when operating conditions dictate infinitely variable output speeds over a fixed range. The Titan™ Drive consists of a motor, belt casing, and main gear drive.

The beltbox contains an Adjusting Pulley (Driver) that is attached to the motor output shaft. A handwheel or optional Electric Remote Control Motor (EMFST) is used to vary the operating pitch diameters of the driver pulley in-turn making a corresponding adjustment to the Spring Pulley (Driven). Belt center distance remains fixed. Speed is typically adjusted by loosening the lock nut handle on the handwheel.

Pulleys are manufactured from the corrosive resistant and extremely durable alloy "Durfondal" to provide superior wear resistance and assure grooving and wear will be minimized under rated operating conditions. All sliding components are coated to resist fretting and corrosion. Pulleys are permanently grease lubricated and require no service during the normal life of the Titan™ drive.

WARNING

NORD does not support the use of the Titan™ belt drive in explosion proof or hazardous environments. While the belt is non-sparking, the Titan™ belt drive assembly does not have a safety to disengage the belt. In the event of an overload the belt can slip and generate excessive heat.

HARMFUL SITUATION

Operational speed adjustments must be performed when the motor is operational. Failure to comply may damage the belt and pulleys.

IMPORTANT NOTE

- In order to renew the grease coating over the full tracking distance of the pulleys and to avoid damage to the pulley surfaces and/or belt, the Titan™ belt drive should occasionally be operated over the entire speed range.
- Speeds stops located on the adjustment spindle are factory adjusted; further adjustments can cause damage to the belt box and/or main drive.
- When operating in areas of higher ambient temps, or when installed where ventilation is poor, additional cooling may need to be applied to the belt housing.
- The adjustment wheel and speed adjustment shaft should also be cleaned periodically and coated with molybdenum based anti-seize compound.

2. Motor

WARNING

To prevent possible injury and/or damage to the electric motor, the variable speed drive, or the driven equipment, it is important to follow the motor manufacturer's instructions pertaining to safe handling, installation, and maintenance of the electric motor.

Connect the motor in accordance with the wiring information supplied by the motor manufacturer and make sure the motor nameplage voltage and frequency agree with the available power supply. Use the proper protective motor switches to help protect the motor windings from overload and/or phase failure.

To insure the same performance the replacement motor must be of the same design and style as the original. The end of the motor shaft must also have a tapped hole in it as shown below.

NEMA Frame Size	Thread Size	Minimum Thread Depth
56C	1/4-20	1.00 inch
143TC/145TC	1/4-20	1.00 inch
182TC/184TC	3/8-16	1.25 inch
213TC/215TC	5/8-11	1.25 inch
254TC/256TC	5/8-11	1.50 inch
284TC	5/8-11	1.50 inch

3. Installation

Titan™ drive packages may be supplied with a variety of gear units including foot-mounted, flange-mounted or shaft-mounted options.

When selecting the drive installation site, one should remember that air-cooled motors are ideally designed for ambient temperatures between -4°F and +104°F (-20°C and +40°C) and for installation at altitudes of 3,300ft (1,000m) above mean sea level.

The installation site should also ensure the following:

- Unrestricted airflow over the motor and variable speed drive.
- Accessibility to the oil fill-hole, level-hole and vent-hole locations on the main gear drive.
- A foundation (mounting base) of adequate size that is flat, torsionally rigid, and vibration-proof.
- Adequate shaft alignment between the drive and the driven equipment.
- Adequate space to allow motor removal and/or maintenance.
- In cases where brake motors are used, fan guard removal may be necessary to allow for brake adjustment and maintenance.

4.V-Belt replacement

Please reference the general parts lists starting on Page 6 of this manual.

A. Run the Titan™ drive to its maximum speed and switch off. Be certain the power can not be inadvertently switched on again.
B. Unscrew the socket head screws (521) and remove the belt casing cover, together with the entire speed control unit.
C. Remove the old V-belt by first drawing it over the cones of the spring-loaded pulley (507) and then sliding over the open adjustable pulley (506). Installing a tapered wedge made of soft pine between the spring pulley halves will help keep the adjustable pulley open, and may aid in the removal of the old V-belt.
D. Wrap the new V-belt around the cones of the open adjustable pulley (506) and then draw it over the spring-loaded pulley (507). Installing a tapered wedge made of soft pine between the spring pulley halves will help keep the adjustable pulley open, and may aid in the installation of the new V-belt.
E. Reassemble the belt casing cover.

⚠ WARNING ⚠

NORD does not support the use of the Titan™ belt drive in explosion proof or hazardous environments. While the belt is non-sparking, the Titan™ belt drive assembly does not have a safety to disengage the belt. In the event of an overload the belt can slip and generate excessive heat.

TITAN™ V-Belt part numbers and sizes

TYPE	Belt P/N	Belt Size
R100	71092000	22 x 7 x 567 x 28°
R150	71592000	28 x 8 x 754 x 28°
R196	71992000	33 x 9 x 906 x 28°
R210	72192000	37 x 10 x 954 x 28°
R250	72592000	47 x 12 x 1135 x 28°
R280	72892100	55 x 15 x 1255 x 28°
R300	73092100	51 x 16 x 1444 x 28°
R350	73592100	70 x 18 x 1515 x 30°
R375	73792100	83 x 23 x 1767 x 32°
R400	74092100	83 x 23 x 1842 x 32°
R500	75092100	83 x 26 x 2877 x 32°

TITAN™ ADJUSTABLE SPEED DRIVES

5. Pulley replacement

HARMFUL SITUATION

- Install new pulleys in the same exact orientation as the old pulleys to prevent damage to the machinery.
- Special care must be taken when reassembling the Z-Flow pattern, as the moving parts of the pulleys must always be situated on opposite (diagonal) sides.
- Do not attempt to disassemble spring pulley. Failure to remove the spring without the proper fixtures/tools can result in serious injury.

Please reference the instructions and diagrams shown below, as well as the general parts lists that start on Page 6 of this manual.

A. The spring loaded pulley (507) and the adjustable pulley (506) are held securely to the shaft using a holding screw (519/516), a thrust washer (518/515), and a snap ring (520/517). Remove the screw (519/516), thrust washer (518/515) and snap ring (520/517) that are used to hold the pulley on the shaft.

B. In order to protect the tapped hole in the shaft, place a steel disc (I), slightly smaller than the shaft diameter, against the end of the shaft.

C. The thrust washer has an internal thread diameter that is slightly larger that the thread on the holding screw (516/519). Refit the snap ring (520/517) and replace the thrust washer (518/515). In order to aid in the removal of the pulley, a disassembly screw, slightly larger than the holding screw (516/519) can be inserted into the thrust washer (518/515) and tightened against the steel disc (I). Remove the spring loaded pulley (507) or the adjustable pulley (506) by using the thrust washer and disassembly screw (III) as a "jacking bolt".

D. If the thrust washer (518/515) rotates when trying to remove the pulley, secure the thrust washer with a pin inserted into the keyway (II).

E. After the old pulley is removed, disassemble or remove the disassembly screw (III), thrust washer (518/515), snap ring (520/517), and protective steel disc (I) that was placed over the shaft.

F. Before installing the new pulley, apply an anti-seize compound to the shaft. Reassemble the snap ring (520/517) and thrust washer (518/515) into the pulley bore. Use the holding screw (519/516), pull the pulley onto the shaft. Do not drive the pulley onto the shaft with a hammer.

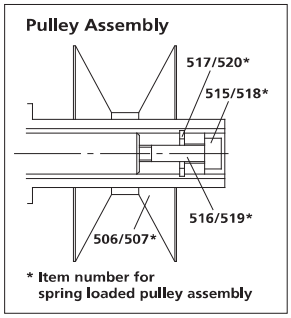

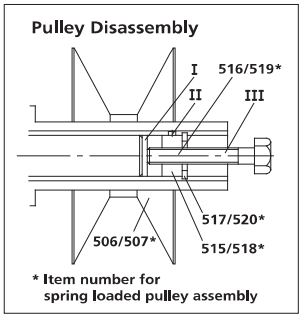

6. Electromechanical remote control speed adjustment

The Electromechanical Remote Control (EMFST) replaces the hand wheel when remote speed adjustment is desired. With the EMFST the speed range is set by adjusting the limit switches that are supplied with the motor. The limit switches are factory preset to operate within the specified speed range of the TitanTM variator.

HARMFUL SITUATION

The EMFST is assembled to the control-side of the Titan™ belt case; prior to assembly, the adjustment cone of the EMFST control must be driven towards the "full-back" or "minimum speed" position. This must be done by powering the EMFST motor. To prevent damage to the adjustment spindle, nut, or EMFST gear unit, one must be very careful to stop the motor prior to reaching the final "full-back" position.

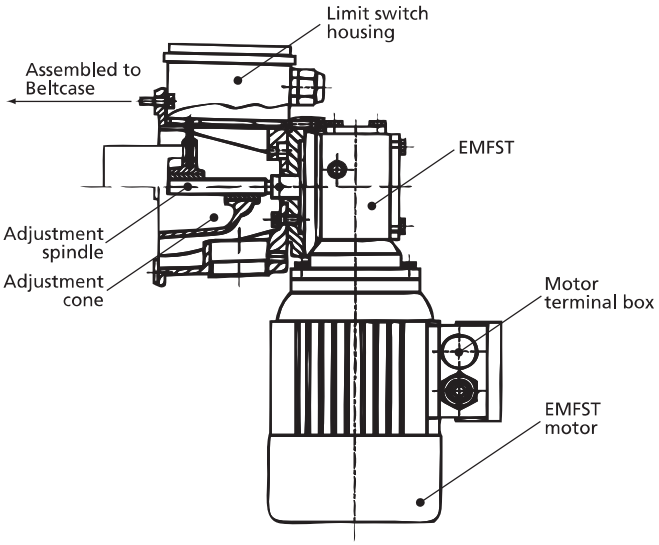

Dual Rated – Electronic Remote Control Motor Option (EMFST)

Type	FY63 A-4
Phase	3 ~
Nominal Frequency	50 / 60 Hz
Nominal Power	0.12/0.14 kW
Nominal Speed	1360 / 1660
Voltage	265Δ - 460Y/230Δ - 400Y
Current at High Voltage	0.43/0.50 Amp
Starting Current Ratio	3.5
Starting Torque Ratio	1.8
Breakdown Torque Ratio	1.9
Efficiency	45.2%
Power Factor	0.68/0.70
Enclosure	IP55
Insulation Class/Rise	F/B
Weight	4.0 kg or 8.82 lb

7. Wiring diagram

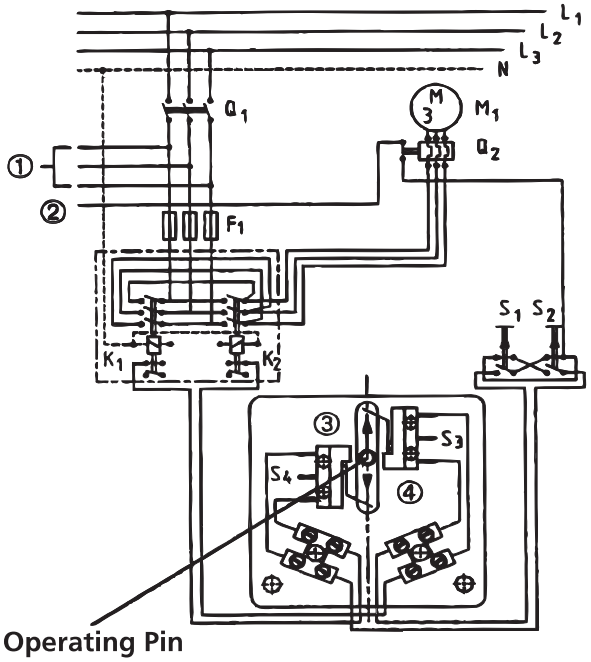

Symbol legend - wiring diagram

L_1, L_2, L_3	Incoming Power
K_1, K_2	Combined relay for phase reversal of the EMFST motor (CW or CCW shaft rotation)
M_1	EMFST motor
Q_1	Main switch
Q_2	Motor protection switch
S_1	Push Button "speed increase"
S_2	Push Button "speed decrease"
S_3	Limit switch "upper limit"
S_4	Limit switch "lower limit"
①	Main drive motor
②	Control for servo motor and motor protection switch
③	Direction of "speed increase"
④	Direction of "speed decrease"

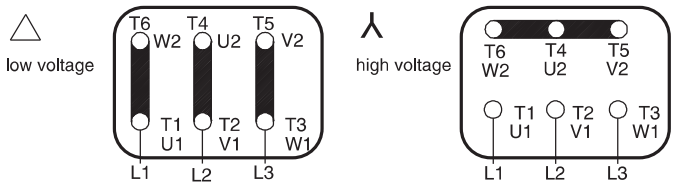

8. Limit switch adjustment

HARMFUL SITUATION

The main motor and TitanTM variator must be operating while trying to adjust the limit switches of the EMFST motor.

A. Wire the EMFST motor according to the motor wiring diagram (Page 4).

B. Open the cover plate of the limit switch housing and check the direction of rotation while in operation as follows:
- Pressing Push Button S1 should move the operating pin forward or towards the belt case.
- Pressing Push Button S2 should move the operating pin in the opposite direction or away from the belt case.
- If the direction of rotation is incorrect, reverse the polarity of the electric remote control motor (EMFST).

C. Check the function of the limit switches as follows:
- Actuate Limit Switch S3 (upper speed limit) and press Push Button S1 (speed increase).
- Actuate Limit Switch S4 (lower speed limit) and press Push Button S2 (speed decrease).
- In both cases there should be no movement of the operating pin.

D. Operate the EMFST motor towards minimum speed. Use a tachometer to check the final output speed of the drive unit. As minimum speed is approached, make only small incremental adjustments in speed. Re-check the output speed of the drive unit.

E. Upon reaching the required minimum speed, stop the EMFST unit.

IMPORTANT NOTE

There should be no "wheezing" noise emitted from the belt drive at this stage. If there is such a noise the belt may be "bottoming" on the "adjustable control pulley". You should then increase the speed of the drive slightly.

8. Limit switch adjustment (ctd)

F. Unscrew the two fixing screws of the minimum speed limit switch. Adjust the limit switch by putting it against the operating pin and re-tightening the screws.

G. Operate the EMFST motor towards maximum speed. Use a tachometer to check the final output speed of the drive unit. As maximum speed is approached, make only small incremental adjustments in speed. Re-check the output speed of the drive unit.

H. Upon reaching the required maximum speed, stop the EMFST unit.

IMPORTANT NOTE

There should be no "wheezing" noise emitted from the belt drive at this stage. If there is such a noise the belt may be bottoming on the "spring pulley". You should then decrease the speed of the drive slightly.

I. Unscrew the two fixing screws of the maximum speed limit switch. Adjust the limit switch by putting it against the operating pin and re-tightening the screws.

J. Re-check both minimum and maximum speed positions by operating the EMFST and moving towards the limit switch settings. Use a tachometer to check the speed range at the output of the final drive. Readjust limit switches if necessary.

9. Non-contacting speed indicator

IMPORTANT NOTE

The speed indicator options are not available when using the EMFST.

The speed indicator contains a built in sensor which converts the signals coming from the pulse generator into a direct current signal for the speed indicator. Adjustment of the analog style meter is possible by means of set screws on the back of the meter.

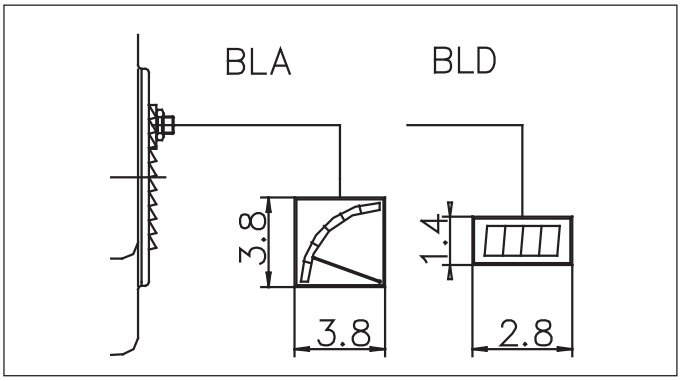

Type BLA: analog speed indicator

Scale Marking: 0-100% - Scale deflection: 90°
Type of enclosure: IP 53 – Terminals IP 00

Type BLD: digital speed indicator

Digital indicator: 4 digits – 7 segment red LED display.
Type of enclosure: IP 50 – Terminals IP 00.

Variable Speed Helical In-Line Gear Units Mounting Positions

M1 U	M1 Z	M2 U	M2 Z	M3 U	M3 Z
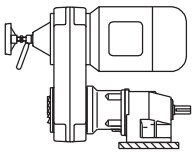	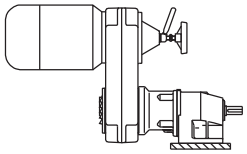	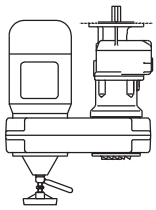	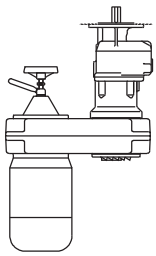	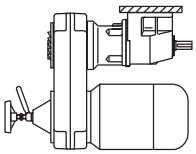	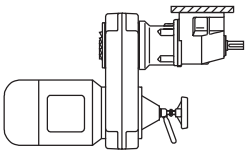

M4 U	M4 Z	M5 U	M5 Z	M6 U	M6 Z
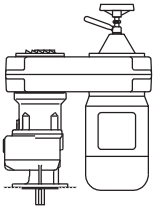	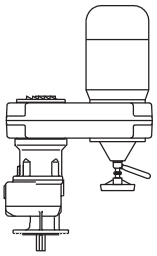	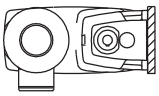	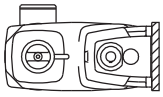		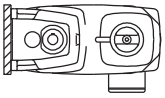

Variable Speed Helical-in-Line Position of terminal box and cable entry

Please specify position of terminal box and cable entry.

Normal Design: Cable entry at 3 and terminal box at I or III only.
If other positions are required, please specify while ordering.

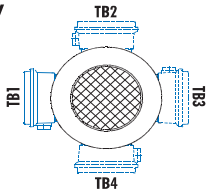

Terminal Box Positions (Position M1 shown)

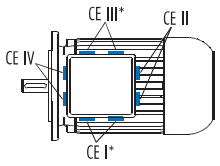

Conduit Entry Positions (Position M1 shown)

In all mounting positions the variable speed drive may be mounted at an angle interval of 90°.

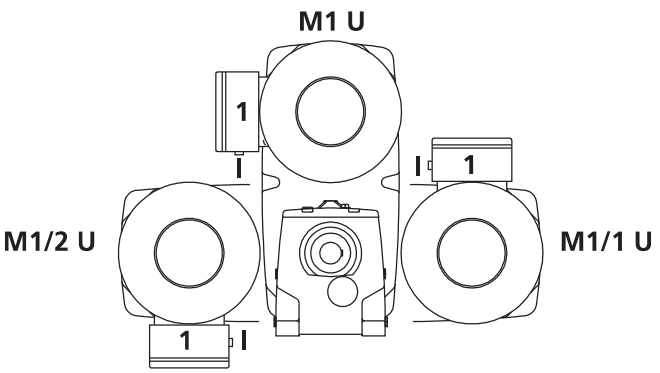

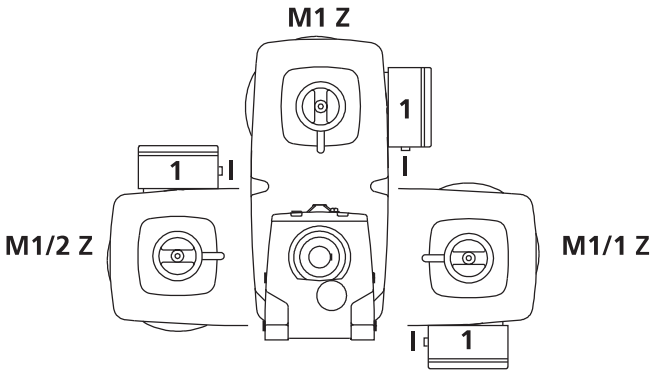

Variable Speed Clincher™ Gear Units Mounting Positions

M1 U	M1 Z	M2 U	M2 Z	M3 U	M3 Z
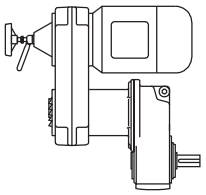	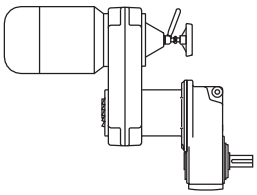	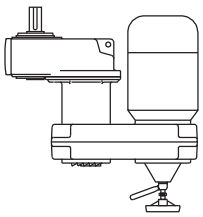	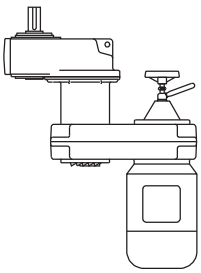	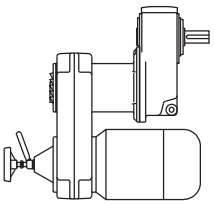	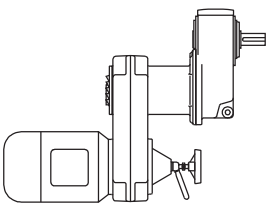

M4 U	M4 Z	M5 U	M5 Z	M6 U	M6 Z
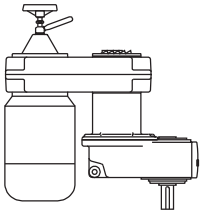	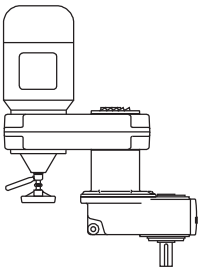	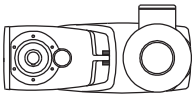	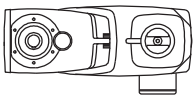	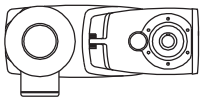	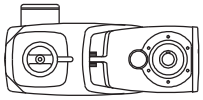

Variable Speed Clincher™ Position of terminal box and cable entry

Please specify position of terminal box and cable entry.

Normal Design: Cable entry at 3 and terminal box at I or III only.
If other positions are required, please specify while ordering.

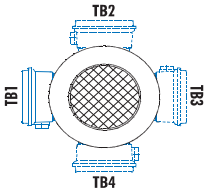

Terminal Box Positions (Position M1 shown)

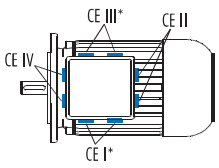

Conduit Entry Positions (Position M1 shown)

In all mounting positions the variable speed drive may be mounted at an angle interval of 90°.

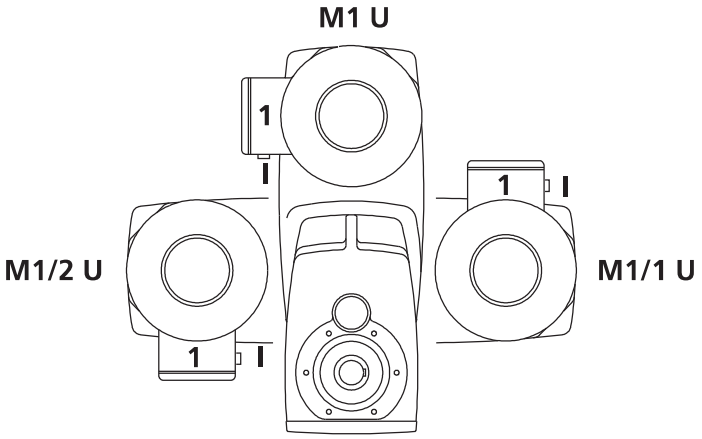

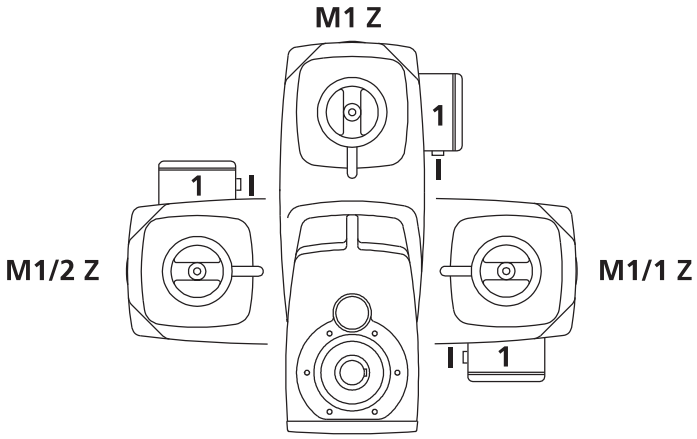

Variable Speed Helical Bevel Gear Units Mounting Positions

M1 U	M1 Z	M2 U	M2 Z	M3 U	M3 Z
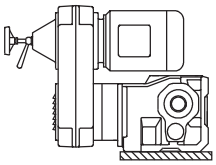	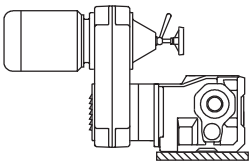	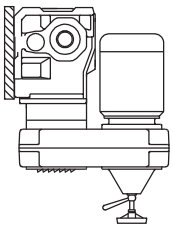	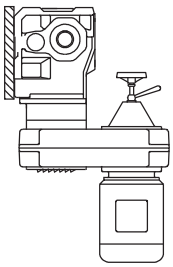	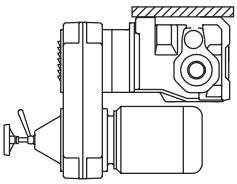	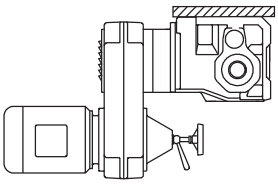

M4 U	M4 Z	M5 U	M5 Z	M6 U	M6 Z
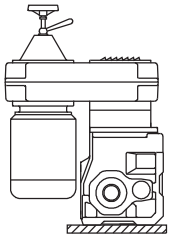	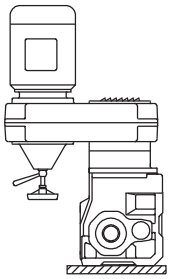	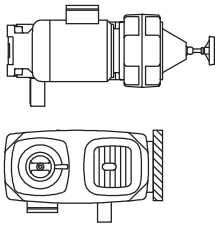	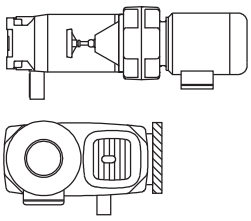	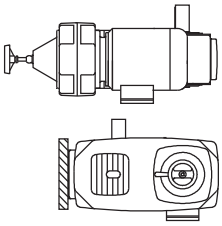	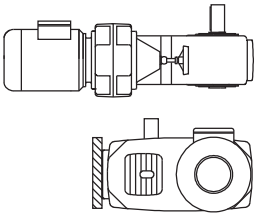

Variable Speed Helical-bevel Position of terminal box and cable entry

Please specify position of terminal box and cable entry.

Normal Design: Cable entry at 3 and terminal box at I or III only.
If other positions are required, please specify while ordering.

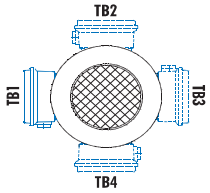

Terminal Box Positions (Position M1 shown)

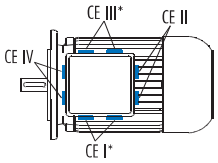

Conduit Entry Positions (Position M1 shown)

In all mounting positions the variable speed drive may be mounted at an angle interval of 90°.

M1 U

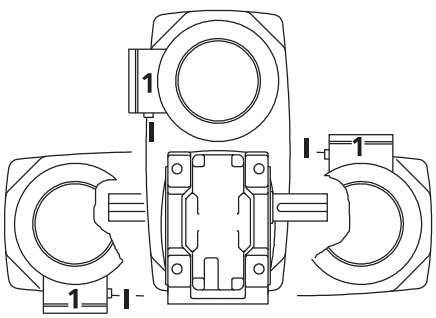

M1/2 U M1/1 U

M1 Z

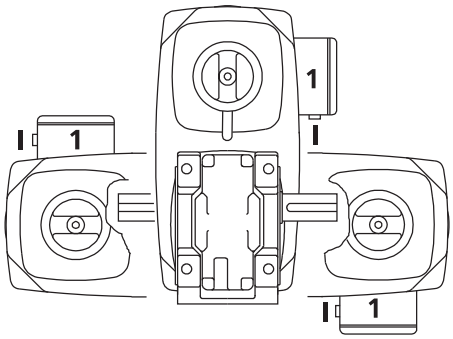

M1/2 Z M1/1 Z

Variable Speed Helical Worm Gear Units Mounting Positions

M1 U	M1 Z	M2 U	M2 Z	M3 U	M3 Z
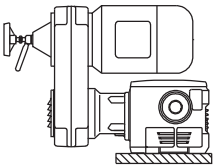	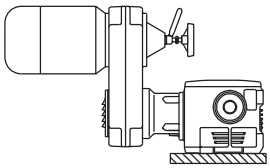	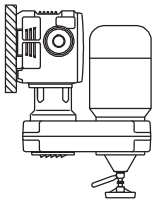	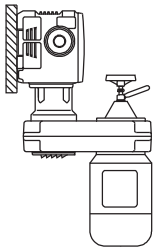	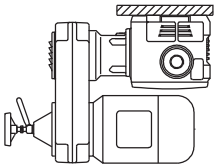	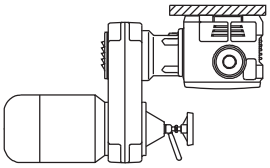

M4 U	M4 Z	M5 U	M5 Z	M6 U	M6 Z
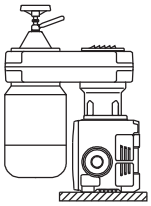	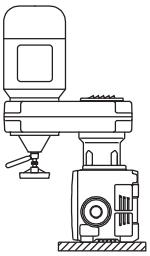	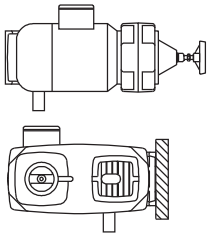	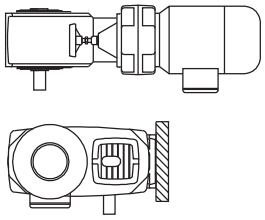	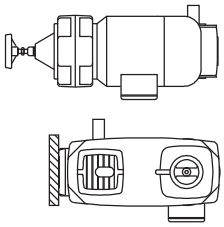	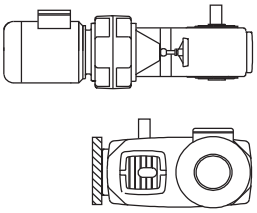

Variable Speed Helical-worm Position of terminal box and cable entry

Please specify position of terminal box and cable entry.

Normal Design: Cable entry at 3 and terminal box at I or III only.
If other positions are required, please specify while ordering.

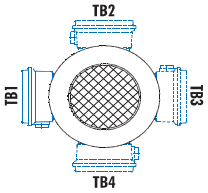

Terminal Box Positions (Position M1 shown)

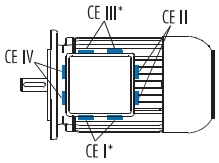

Conduit Entry Positions (Position M1 shown)

In all mounting positions the variable speed drive may be mounted at an angle interval of 90°.

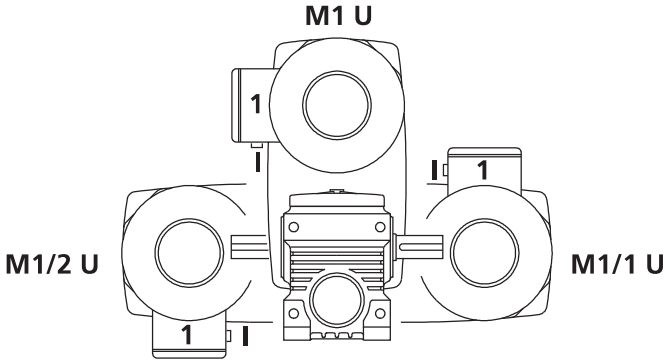

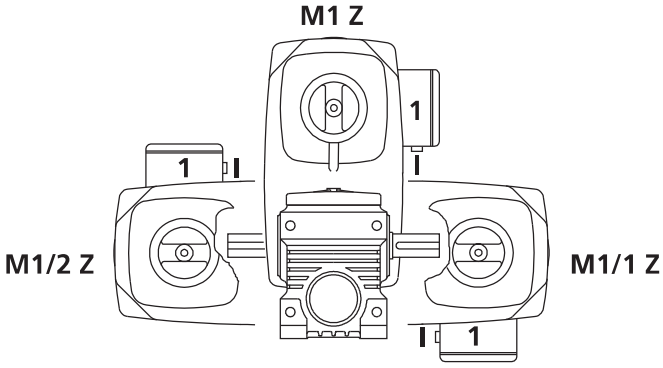

R100
R150
R196
R210

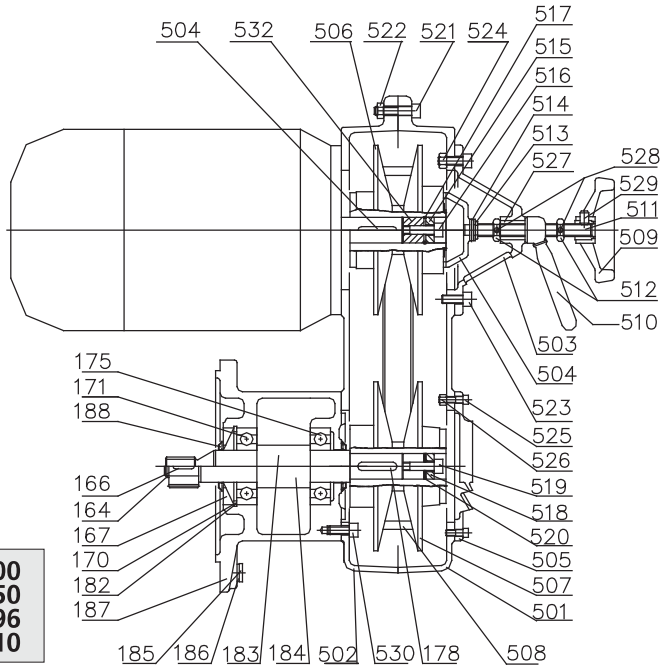

R250
R280
R300
R350

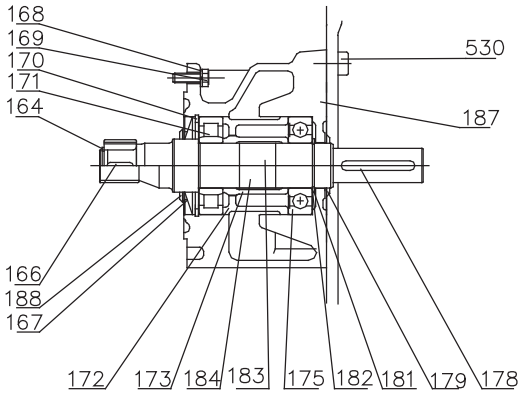

R400
R500

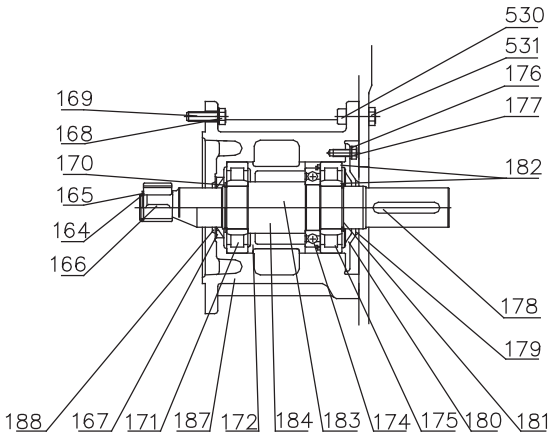

TITAN™ General Parts List

164	Circlip / Snap ring	184	Input shaft, cut gear	515	Thrust Washer
165	Shim	185	Locking screw	516	Socket head bolt
166	Key	186	Seal washer	517	Circlip / Snap ring
167	Shaft Seal	187	Reducer input housing	518	Thrust washer
168	Washer	188	Oil slinger	519	Socket head bolt
169	Hex head bolt	501	Beltcase cover	520	Circlip / Snap ring
170	Circlip / Snap ring	502	Beltcase connecting cover	521	Socket head bolt
171	Input shaft bearing	503	Hand wheel adjustment cover	522	Hex nut
172	Spacer	504	Adjustment cone	523	Socket head bolt
173	Spacer	505	Ventilation cover	524	Hex nut
174	Ball bearing	506	Adjustable pulley	525	Socket head bolt
175	Input shaft bearing	507	Spring loaded pulley	526	Hex nut
177	Hex head bolt	508	V-belt	527	Screw bushing
178	Key	509	Handwheel	528	Set screw
179	Oil slinger	510	Locking Handle	529	Set screw
180	Bearing cover	511	Adjustment Spindle	530	Socket head bolt
181	Circlip / Snap ring	512	Locknut (speed stop)	531	Hex nut
182	Shim	513	Washer	532	Spacer
183	Input shaft, plain	514	Spiral Pin / Spring Cotter		

Angular Handwheel Assembly for R100-R400

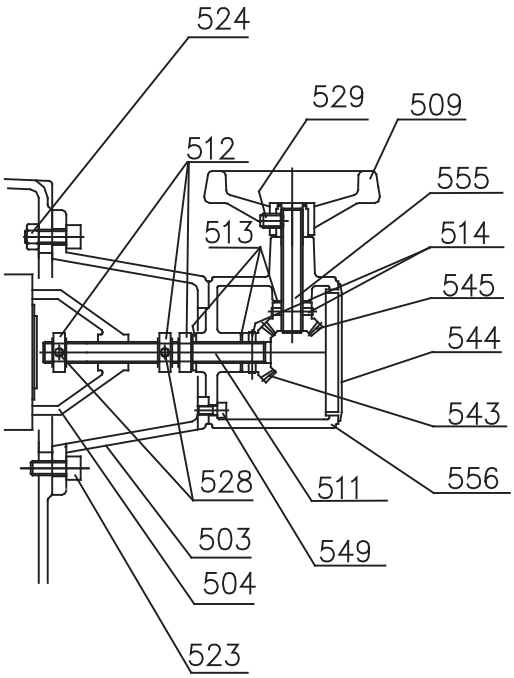

Non-Contacting Speed Indicator for R100-R500 *

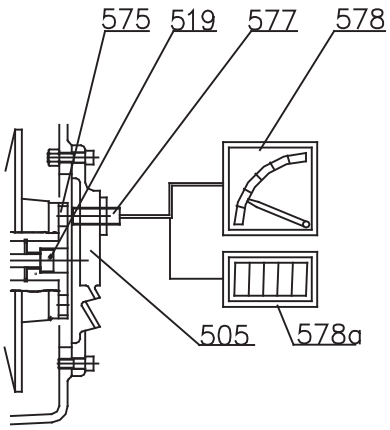

Angular Handwheel Assembly & Non-contacting Speed Indicator

503	Adjustment Cover	519*	Socket head bolt	549	Socket head bolt
504	Adjusting Cone	523	Socket head bolt	555	Handwheel shaft
505*	Ventilation Cover	524	Hex nut	556	Bevel gear case
509	Handwheel	528	Set screw	575*	Pulse generator
511	Adjustment Spindle	529	Set screw	577*	Pulse Sensor
512	Locknut	543	Bevel Gear	578*	Speed Indicator (Type BLA)
513	Washer	544	Seal plug	578a*	Speed Indicator (Type BLD)
514	Spiral Pin / Spring Cotter	545	Bevel gear		

11. TITAN™ Belt replacement part numbers

Ttan™ Type	Belt P/N	Belt Size
R100	71092000	22 x 7 x 567 x 28°
R150	71592000	28 x 8 x 754 x 28°
R196	71992000	33 x 9 x 906 x 28°
R210	72192000	37 x 10 x 954 x 28°
R250	72592000	47 x 12 x 1135 x 28°
R280	72892100	55 x 15 x 1255 x 28°
R300	73092100	51 x 16 x 1444 x 28°
R350	73592100	70 x 18 x 1515 x 30°
R375	73792100	83 x 23 x 1767 x 32°
R400	74092100	83 x 23 x 1842 x 32°
R500	75092100	83 x 26 x 2877 x 32°

12. TROUBLESHOOTING

Problem with Variable Speed Unit	Possible Causes	Suggested Remedy
Drive Slips	V-Belt is worn	Replace V-Belt.
	V-Belt or face of adjustment pulley is dirty or contaminated.	Clean Contaminated part: • V-Belt – use dry cloth or paper. • Adjustment Pulley – okay to use mild solvent provide excess is cleaned with a dry cloth.
	Load is too high.	Check measured power and reduce operating load to catalog values.
Drive heats up excessively	Load is too high.	Check measured power and reduce operating load to catalog values.
Drive appears noisy or too loud.	V-Belt is damaged: • May be caused after a brief stalling of the drive. • May be caused by intermittent loading of the drive.	Determine cause of damage, and replace V-Belt.

Problem with Electromechanical Remote Control (EMFST)	Possible Causes	Suggested Remedy
Speed cannot be adjusted.	Unit is not wired properly.	Wire unit in accordance with circuit diagram.
Speed range cannot be reached.	Motor limit switches turn off too early.	Adjust limit switches.

1. Basic operation and speed adjustment

The NORDISC™ Friction Drive will supply infinite variable speed adjustments over a fixed speed range. The NORDISC™ Drive consists of a motor, dry traction drive, and main gear drive. The motor is typically furnished as an integral mount to the traction drive, however a NEMA C-face Input Adapter (Flex-C-Input Adapter) is also available.

Attached to the output shaft of a constant speed motor, is the driving disc portion of the traction drive. The driven disc is angled approximately 2°, localizing the friction contact on the disc pair. As the adjustment spindle is rotated, the input side of the housing moves either up or down, changing the effective pitch diameter of the driving disc. Speed is typically adjusted by the handwheel.

HARMFUL SITUATION

Speed adjustments must be performed when the motor is running to prevent possible damage to the traction drive parts.

HARMFUL SITUATION

Initial adjustments of the speed stops located internal to the traction drive are completed at the factory. Further adjustments of the speed stops can cause damage to the traction drive and/or main drive.

2. NORDISC™ Friction Drive

The variable speed drive requires only minimal maintenance. However, the friction ring is a wear item.

HARMFUL SITUATION

The traction drive should be periodically operated through its entire speed range, in order to prevent localized wear patterns on the driving disc and/or possible damage to the driving disc.

The friction drive does not require lubrication unless it is disassembled for an overhaul. Units should be checked periodically for:

- Increased noise level.
- Increased operating temperatures.
- Increased vibration.
- Increased motor amperage draw.
- Increased or excessive shaft movement.

Every 10,000 hours of operation, it is suggested that the bearings be cleaned and re-greased with a lithium-based NLGI #2 Grease.

The adjustment wheel and speed adjustment shaft should also be cleaned periodically and coated with molybdenum-based anti-seize compound.

3. Motor

WARNING

To prevent possible injury and/or damage to the electric motor, the variable speed drive, or the driven equipment, it is important to follow the motor manufacturer's instructions pertaining to safe handling, installation, and maintenance of the electric motor.

Connect the motor in accordance with the wiring information supplied by the motor manufacturer and make sure the motor nameplage voltage and frequency agree with the available power supply. Use the proper protective motor switches to help protect the motor windings from overload and/or phase failure.

WARNING

Explosion proof motors should not be used on the friction drive. The friction drive is not recommended for use in explosion proof atmospheres.

4. Seperating the driven disc assembly from the driving disc assembly

A. Lockout the electric power to the motor and make sure the wires are disconnected.

B. Support the intermediate housing (Item 447) and the attached motor assembly.

C. Remove the four hex head screws that connect the driving disc assembly (intermediate housing / Item 447) to the driven disc assembly (output housing / Item 402).

D. Slide the intermediate housing (Item 447) away from the output housing (Item 402).

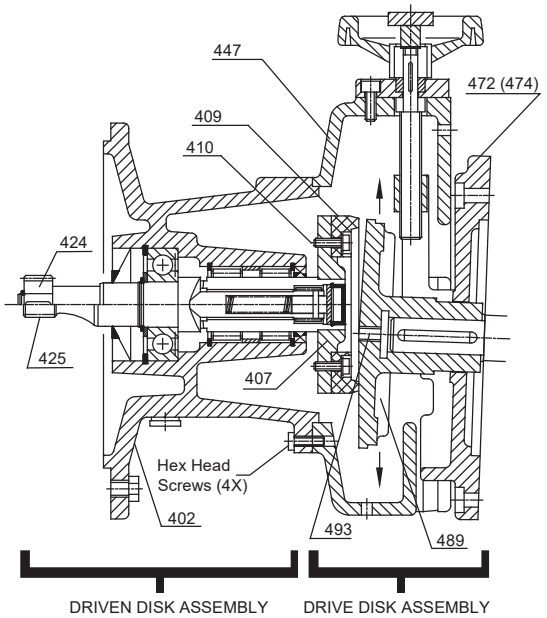

5. Friction disc replacement

A. Separate the driven disc assembly from the driving disc assembly (See Separate Instructions).

B. Once the friction disc (Item 409), is exposed remove the socket head cap screws (Item 410) that hold the friction disc or friction ring (Item 409) to the friction disc carrier (Item 407).

C. Clean the contact surface between the friction disc and friction disc carrier.

D. Vacuum or brush out the NORDISC™ drive housing to remove accumulated friction material dust. Be careful not to ingest dust while cleaning.

E. Inspect main housing for damaged parts while disassembled.

F. Attach the new friction disc to the carrier using the socket head cap screws. Permissible tightening torques are per the table below:

Type	Screw Size	Material Grade	Tightening Torque
RV10	M5 X 12	8.8	6 N-m / 53 lb-in
RV20	M5 X 16	8.8	6 N-m / 53 lb-in
RV30	M6 x 16	8.8	10 N-m / 88 lb-in
RV40	M6 x 20	8.8	10 N-m / 88 lb-in

G. Re-assemble intermediate housing or "RV" housing (Item 447) to output bearing housing (Item 402). To re-assemble, apply Steps 1-4 in reverse order. Use a thread-locking compound to secure the hex head screws.

6. Bearing and seal replacement - NORDISC™ output

A. Separate the driven disc assembly from the driving disc assembly (See Separate Instructions).

B. Slide the intermediate housing (Item 447) away from the output housing (Item 402) and remove the shaft oil seal (Item 439).

C. Remove circlips/snap-rings (Item 437 and 438).

D. Remove shims and supporting disc (Items 434 & 436).

E. Slide the hollow shaft/friction disc carrier assembly (Item 404) away from output housing (Item 402).

F. Press output gear-shaft (Item 424 or 425) and bearing (Item 435) out of output housing. Shaft and bearing come out on the output or gear-shaft side.

G. Remove oil seal (Item 421) from output housing.

H. Remove two circlips/snap-rings (Items 418) from output housing and remove needle bearings and spacer (Items 419 and 420).

I. Re-assemble in the reverse order, replacing ball bearing, needle bearings, and oil seals (Items 435, 419, 421 and 439). If required, also replace any shims, spacers, or circlips (Items 434, 436, 420, 437, 438, and 418). During assembly, repack bearings with a lithium-based NLGI #2 grease. Needle bearing cavity should be approximately 1/3 full after re-greasing.

⚠ WARNING ⚠

- The output shaft compression spring (Item 430) does not require maintenance. If the spring fractures the complete shaft should be replaced as a complete assembly or returned to NORD Gear for repair.
- Special fixtures are required to remove and install the spring. Personal injury can result if this repair is attempted in the field.

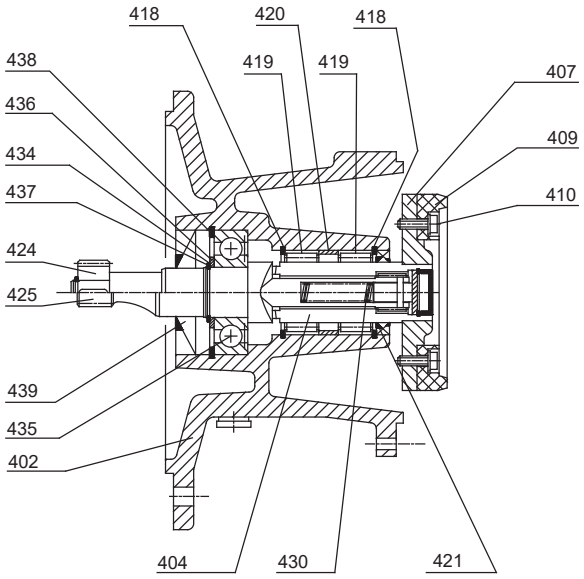

7. Driving disc dissassembly and reassembly

The driving disc (Item 489) is attached directly to either the motor shaft or the shaft of the C-Face Input (Flex-C-Input) Adapter. One must first remove the driving disc from the input-side of the NORDISC™ in order to:

- Replace the motor.
- Replace the bearings in the C-Face Adapter.

Driving Disc Removal

A. Separate the driven disc assembly from the driving disc assembly (See Separate Instructions).

B. Slide the intermediate housing (Item 447) away from the output housing (Item 402).

C. After removing the input side from the output side, position the driving disc (Item 489) in the middle of the housing by turning the speed adjusting hand wheel (Item 462).

D. Remove the setscrew in the middle of the driving disc (Item 493). Insert a hardened bolt in the hole that is in the center of the driving disc (Item 489), and tighten the bolt against the shaft to separate or remove the driving disc from the shaft (see table).

Type	Setscrew Size	Bolt Size
RV10	1/4-20	1/4-20 x 2-1/4 in
RV20	5/16-18	5/16-8 x 2-3/4 in
RV30	1/2-13	1/2-13 x 3 in
RV40	5/8-11	5/8-11 x 4 in

Driving Disc Re-Assembly

A. Installation of the driving disc (Item 489) may require heating the disc in an oven or on a hot plate, to allow the disc to be positioned all the way on to the motor shaft or C-Face Input shaft.

⚠ WARNING ⚠

Exercise extreme caution when handling the hot driving disc. Protective gloves are recommended.

B. After heating the disc, position it all the way onto the shaft until it bottoms.

C. Using the table below, measure the "X" dimension from the bottom edge of the friction drive housing (Item 447) to the face of the driving disc (Item 489).

Type	Setscrew Size	"X" Dimension
RV10	1/4-20	0.837/0.867 in
RV20	5/16-18	0.975/1.005 in
RV30	1/2-13	1.133/1.163 in
RV40	5/8-11	1.311/1.341 in

D. Insert the setscrew (Item 493) into the hole in the center of the driving disc, and tighten the setscrew snug to the shaft of the motor or C-Face input assembly. Use a thread-locking compound to help secure the setscrew.

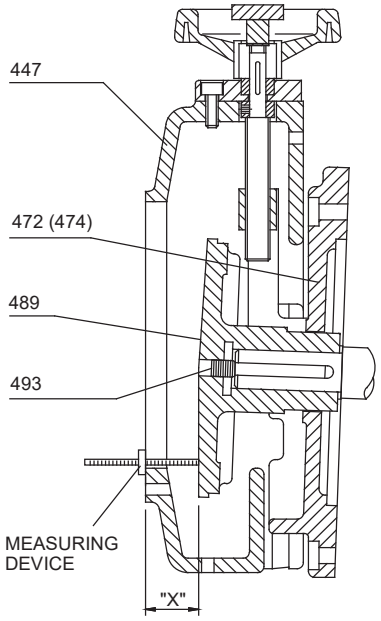

Removal and re-assembloy of motor or C-face input adapter (Flex-C-Input)

A. Separate the driven disc assembly from the driving disc assembly and remove the driving disc (See Separate Instructions).

B. After removing the driving disc (Item 489), the mounting bolts for the motor or C-Face adapter can be accessed. To gain access to all four bolts requires the removal of the two cam grooves (Item 477). The cam grooves can be removed by first removing the socket head screws (Item 478). Then, the motor or adapter bolts ((Item 453) can be removed.

C. Assembly is the reverse of disassembly.

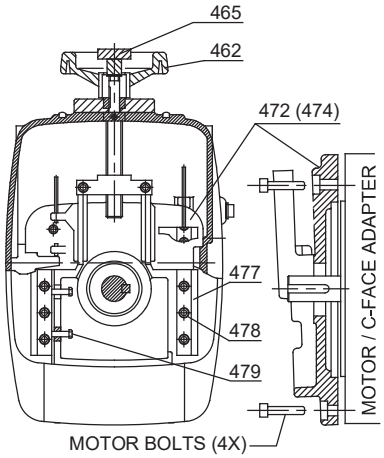

IMPORTANT NOTE

The cam grooves or tapered gibs (Item 477) need to be adjusted during assembly.

Cam groove or tapered gib adjustment

The cam groove or tapered gib on the right side (Item 477) is not adjustable. The cam groove on the left-hand side is to be adjusted by the screws (Item 479) located next to the slide bar (Item 477). The cam grooves are properly adjusted when the slide plate (Item 472 or 474) is allowed to move freely through its complete range.

A. Remove the handwheel assembly nut (Item 465) and handwheel (Item 462) before making adjustment.

B. Clean sliding surfaces of the slide plate and cam grooves, and then re-apply a molybdenum-based anti-seize com pound to these surfaces.

C. Assemble the motor and/or c-face adapter to the slide-plate (Item 472/474) by re-installing the motor bolts. Apply a thread-locking agent to the screw threads during assembly.

D. Place the non-adjustable (right-side) cam groove onto the slide plate and tighten the socket head setscrews (Item 478). Apply a thread-locking agent to the screw threads during assembly

E. Place the intermediate housing (Item 447) onto the slide plate (Item 472 or 474) and then install the adjustable (Left-side) cam groove (Item 477).

F. Install the socket head screws (Item 478) and the adjustment setscrews (Item 479). Apply a thread-locking agent to the screw threads during assembly. Do not completely tighten either set of screws – follow Steps 7 & 8!

G. Adjust the cam groove set screws (Item 479) so that there is minimal side-play or side-movement and be certain that the friction drive housing (Item 447) can move freely.

H. Then, tighten the socket head setscrews (Item 478).

I. After completing the adjustment of the cam grooves (Item 477) the handwheel (Item 462) and handwheel assembly nut (Item 465) can be re-installed.

J. Re-assemble the driving disc and re-connect the driving disc assembly and the driven disc assembly.

NORDISC™ ADJUSTABLE SPEED DRIVES

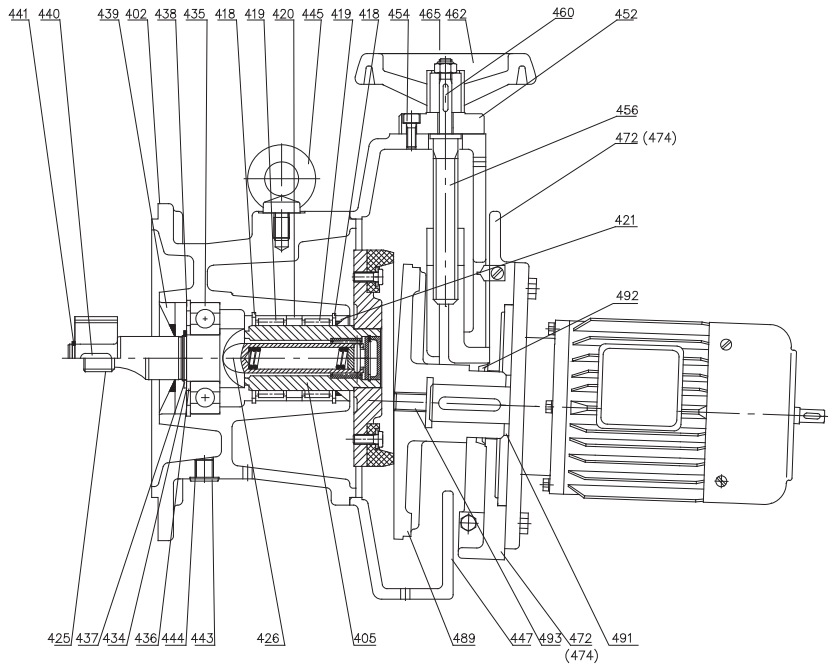

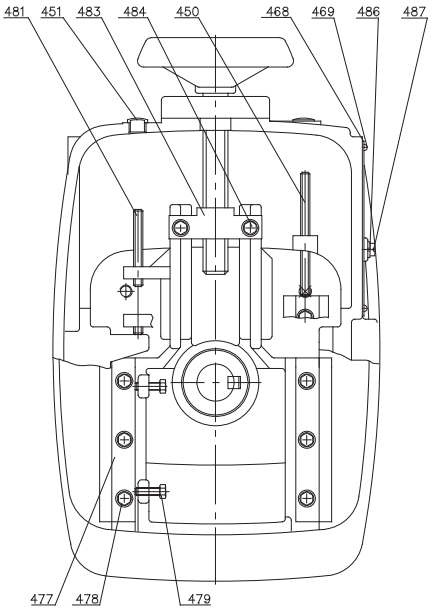

Item 426 (Shaft assembly) and Item 405 (Friction ring carrier assembly) are stocked as complete assemblies.

Item 409 (Friction disc) can be ordered separately per the Table on page 6.

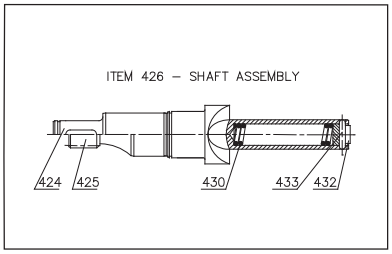

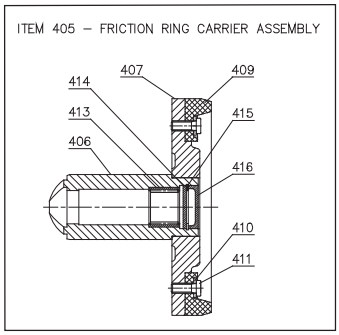

NORDISC™ Parts List

402 Housing	456 Adjusting spindle	426 **Complete shaft assembly**
418 Snap Ring	460 Key	424 Shaft, plain cut *
419 Needle roller bearing	462 Hand wheel	425 Shaft, gear cut *
420 Spacer	464 Washer	430 Compression spring *
421 Seal	465 Hex nut	433 Dowel pin *
434 Shim	468 Scale	432 Spiral pin *
435 Ball Bearing	469 Rivet / self-tapping screw	
436 Supporting disc	472 Slide-plate (NEMA)	* **Included with Item 426**
437 Snap ring	474 Slide-plate (IEC)	
438 Snap ring	477 Cam groove / taper gib	405 **Friction ring carrier assy**
439 Seal	478 Socket head screw	406 Hollow shaft **
440 Key	479 Screw	407 Friction ring carrier **
441 Snap ring	481 Set screw	409 Friction disc **
443 Oil plug	483 Spindle nut	410 Socket head screw **
444 Gasket	484 Socket head screw	411 Washer **
445 Flanged eye bolt	486 Indicator	413 Needle roller bearing **
447 Intermediate housing	487 Indicator screw	414 Washer **
450 Set screw	489 Driving disc	415 Snap ring **
451 Bore plug	491 Supporting disc	416 Bore plug **
452 Spindle cover	492 V-ring seal	
454 Socket head screw	493 Set screw	** **Included with Item 405**
455 Snap ring		

NORD Gear Limited
Toll Free in Canada: 800.668.4378

NORD Gear Corporation
Toll Free in the United States: 888.314.6673

8. NORDISC™ FRICTION DISC REPLACEMENT PART NUMBERS

NORDISC™ Type	RV10	RV20	RV30	RV40
Item 409 - Friction Disc Part Number	79119000	79219000	79319000	79419000

9. TROUBLESHOOTING

Problem With Variable Speed Unit	Possible Causes	Suggested Remedy
Drive Slips.	Friction Disc is worn. Friction Disc or Drive Disc face is dirty or contaminated. Load is too high.	Replace Friction Disc (Page 3). Clean Contaminated part: • Friction Disc – use dry cloth or paper. • Drive Disc – okay to use mild solvent provided excess is removed or cleaned with a dry cloth. Check measured power and reduce operating load to catalog values.
Drive heats up excessively.	Load is too high.	Check measured power and reduce operating load to catalog values.
Drive appears noisy or too loud.	Friction Disc is damaged: • May be caused after a brief stalling of the drive. • May be caused by intermittent loading of the drive.	Determine cause of damage, and replace friction disc (Page 3).
Adjust rate is too low.	Sluggish adjustment rate may be due to corrosion between the slide plate and the cam grooves that are internal to the intermediate housing.	Re-establish low-friction conduction. • Separate driven disc assembly from driving disc assembly. • Clean and re-lubricate slide plate and cam grooves by applying a molybdenum-based anti-seize compound to these surfaces. • In extreme instances it may be necessary to remove the motor and cam grooves in order to thoroughly clean the cam grooves and slide plate. Reference instructions on Page 4, "Cam Groove or Tapered Gib Adjustment".

MOTORS - AC INDUCTION, SINGLE & POLYPHASE

1. Overview

This user manual applies to NORD Motor products and it provides general information for motor operation, installation, maintenance, inspection, repair, and trouble shooting, which is relevant to most of the motor products shipped by NORD. Information and instructions provided in this manual, safety and commissioning information and all other manuals applicable to any items supplied by NORD must be observed.

This instruction manual is not intended to include comprehensive details and information related to all possible design variations or accessories options available with NORD motors. If there is any uncertainty about specific procedures, instructions or motor details, then please refer these questions to NORD for additional information or clarification.

Before installing, operating, or performing maintenance on any electrical motor become familiar with the following:

- The detailed operating instructions and wiring diagrams.
- All applicable national, local and system-specific regulations, codes and practices.
- The national / regional regulations governing safety and accident prevention.
- The proper use of any tools, transportation or hoisting equipment, and safety equipment needed to complete the installation.
- To avoid serious injury or possible damage to the equipment or machine, compliance with all safety and information notes is mandatory!

⚠ WARNING

All work involved in the transport, connection, commissioning and maintenance of any NORD product must be carried out by qualified and responsible technicians. All applicable national, regional, and local work regulations and safety requirements must also be complied with. NORD assumes no liability for personal injury, accidental death, or equipment damage and malfunctions resulting from failure to comply with installation or operating instructions, safety notes, or any work regulations and laws!

⚠ DANGER

To avoid electrocution, injury or death, make certain the motor is properly grounded, completely de-energized and brought to a no-voltage condition prior to working on any electrical connections.

IMPORTANT NOTE

See B1091 user manual for Class I, Division 2 (ID2) and Class II, Division 2 (IID2) Motors.
https://www.nord.com/us/documentation/manuals/details/b1091.jsp

2. Motor Types

NORD AC electric induction motors described in this manual generally include the following types:

- Single speed or two-speed design.
- Three phase alternating current or single phase design.
- Enclosure types: TEFC, TENV, and TEBC.
- See B1091 manual for Class I, Division 2 (ID2) and Class II, Division 2 (IID2) Motors.

https://www.nord.com/us/documentation/manuals/details/b1091.jsp

3. Enclosure Types

Totally enclosed fan cooled (TEFC).

TEFC motor designs rely on fan that is mounted on the motor's rotor shaft so the cooling capacity can vary based upon the motor's operating speed.

Totally enclosed, non-ventilated (TENV)

The TENV motor designs rely purely on convection cooling and they have no fan. Often TENV designs are labeled for intermittent or periodic duty or at a lower power rating than is typical for the given motor frame size.

Totally enclosed, blower cooled (TEBC)

The TEBC design uses separate blower or ventilator fan, with its own low wattage motor and a separate power supply, to provide continuous airflow and cooling. The blower can be used to extend the speed range of the motor and allow extreme slow speed operation without causing a concern for overheating. Blower data is provided in Table 6, page 11.

4. Voltage and Frequency Variation

Voltage and frequency variations are based upon the assumption that the nameplate horsepower will not be exceeded and that the motor temperature may increase. Standard allowable deviations are based upon the type of motor labeling.

NEMA and CSA Labeled Motors

Variations are based upon the nominal utilization voltage, and not the service (supply) voltage as per ANSI C84.1.

Service Voltages	Utilization Voltages
120V, 208V, 240V, 480V, 600V	115V, 200V, 230V, 460V, 575V

- Voltage variation at rated frequency = ±10%.
- Frequency variations at rated voltage = ±5%.
- Combined voltage/frequency variation = ±5%.

CE Labeled Motors

Per IEC 60038, allowable service voltage variations on in the current system, compared to the previous system, are as indicated.

Previous Service Voltages	Current Service Voltages
220V, 380V, 660V	230V, 400V, 690V +6/-10%
240V, 415V	230V, 400V +10/-6%

- Per EN 60034-1 a ±5% voltage variation and a ±2% frequency variation can be tolerated.
- The allowed variations are based upon the voltage (or voltage range) indicated on the motor nameplate.

5. Motor Nameplate Information

The motor nameplate and the display of technical information may vary slightly depending upon the global standard/s that the motor conforms to and the efficiency level. Please reference the examples below.

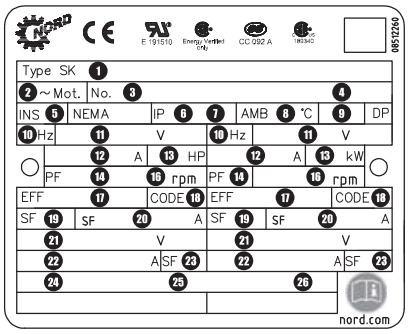

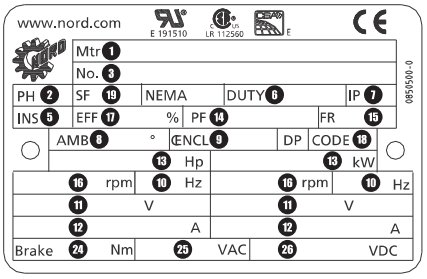

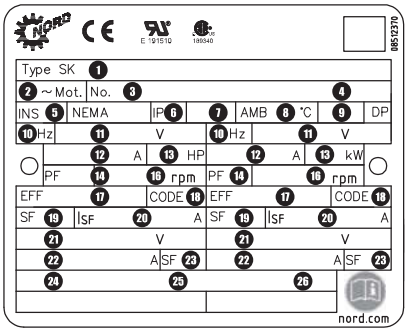

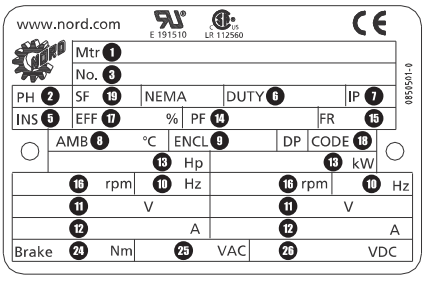

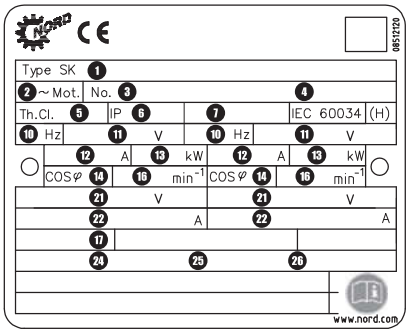

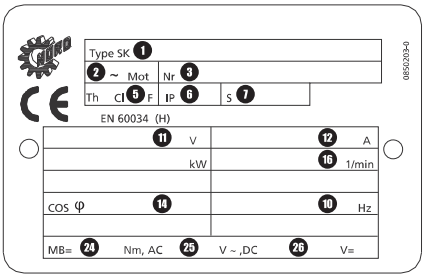

Table 1. Nameplate Data

Field	Definition
1	Model / Type
2	Number of Phases
3	Order Number
4	Serial Number
5	Insulation Class
6	IP (Ingress Protection) Enclosure Rating
7	Duty Cycle
8	Ambient Temperature Rating (°C)
9	Enclosure Type
10	Motor Frequency (Hz)
11	Voltage Rating (V)
12	Current Rating (A)
13	Rated Power (HP or kW)

Field	Definition
14	Power Factor
15	Motor Frame Size
16	Full Load Speed (rpm or 1/min^2)
17	Efficiency
18	NEMA Code Letter
19	Service Factor
20	Current Rating (If Service Factor ≥ 1.15)
21	Operating Voltage Rage (A)
22	Current Rating at Operating Voltage Range (A)
23	Service Factor at Operating Voltage Range (A)
24	Brake Rating (Nm)
25	Brake Supply Voltage (VAC)
26	Brake Coil Voltage (VDC)

6. Motor Options And Nomenclature

NORD offers many options for its motors. The option code will be shown in the motor nomenclature. Below are commonly used options.

Code	Description
AICM	Additional Internal Insulation Coating Applied
BRE	With Brake
EAR	Single Phase, Start Cap/Run Cap
ECR	Single Phase, Start Cap/Run Cap Increased SF
EHB	Single Phase, Run Capacitor Only
EP	Epoxy Dipped Windings
F	Blower Cooling Fan - 3ph & 1ph
FC	Blower Cooling Fan - 1ph
FHL	Brake – Lockable Manual Release
H	Energy Efficient
HL	Brake – Manual Hand Release
IG	Incremental Encoder
IP66	IP66 Environmental Protection
IR	Brake – Current Sensing Relay
KB	Condensation Holes - Removable Plugs
KD	Condensation Holes - Open
MIK	Brake – Microswitch
MS	Power Plug Connector

Code	Description
OL	TENV Motor – Without Fan / With Cover
OL/H	TENV Motor - Without Fan & Cover
P	Premium Efficient Motors
RD	Canopy Cover
RDD	Double Canopy Cover
RG	Brake – Corrosion Protected
RLS	Backstop
SH	Motor Space Heater
SR	Brake – Dust Protected
TF	Thermistor
TW	Thermostat
VN	10:1 Constant Torque Rated Motor
VR	5:1 Constant Torque Rated Motor
VW	20:1 Constant Torque Rated Motor
VZ-F	1000+:1 Constant Torque Rated Motor
WE	2nd Motor Shaft End
WU	High Slip Rotor
Z	High Inertia Motor Fan

Motor Nomenclature

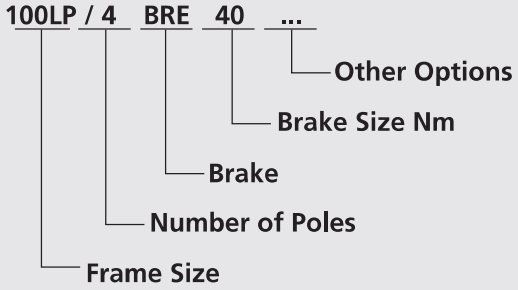

Ordering Examples

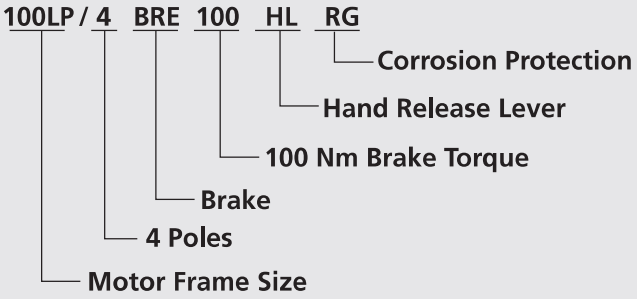

100 Frame Motor with 4 poles, Brake, 100 Nm with a hand release lever, corrosion protected brake, and a current sensing relay.

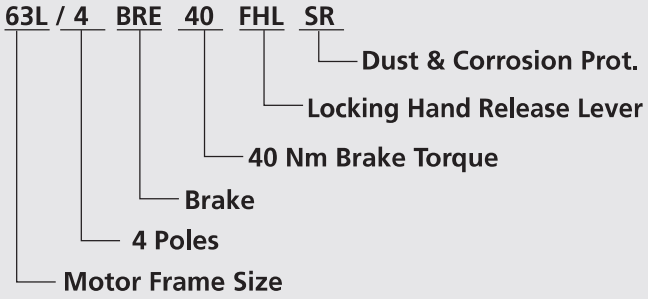

63 Frame motor with 4 poles, a 40 Nm Brake with a locking hand release lever and dust & corrosion protection.

7. Application Conditions

Standard NORD motors are designed to operate in dusty or moist environments and have anti-fungal, thermal class F insulation.

- Enclosure Protection Rating = IP55 (minimum).
- Maximum Installation Height = 3300 ft (1000 m).
- Ambient Temperature = -4 to 104°F (-20 to 40 °C).
- Tropical-proof, Thermal Class F insulation.

The protection level and maximum ambient temperature are stated on the motor nameplate.

IMPORTANT NOTE

NORD can provide motors for an expanded range of applications and service conditions including higher protection levels, extreme ambient conditions and, higher altitudes.

IMPORTANT NOTE

Consult NORD for recommendations if motors are operated under extreme loading conditions, exposed to high inertia loads, or need to operate under unusually high cycling conditions with high starting and stopping frequency.

DANGER

Special design and assembly considerations are needed if NORD motors are subject to any of the following conditions. Environmental conditions may lead to premature damage and/or failure without the proper protective features. Consult NORD for design considerations:

- Outdoor installation with motor in a vertical position.
- Direct contact with aggressive or corrosive materials (acids, bases, salts, certain gases, etc.).
- Exposure to extreme high or low temperatures, high relative humidity, condensation moisture or very wet environments.
- Subject to extreme material build-up on the unit (dirt, dust, sand, etc.).
- Hazardous Locations (risk of fire or explosion).

8. Transportation

During transportation observe the following:

- Make sure that all eyebolts and lifting lugs are tight and firmly against their supporting surface.
- Use all the lifting eyes that are intentionally supplied with the motor.
- Lift only at designed points.
- Protect the mounting surface from possible damage during transportation.
- Always use sufficiently rated handling equipment, lift mechanisms and lifting straps.
- With heavier objects or unbalanced loads, it may be appropriate to use more than one lifting point or an additional strap or sling to assure safe transportation of the assembly. This is especially true of assembled gearmotors and motorized reducers.
- Once the NORD motor or assembly is properly installed, remove the transportation fixtures completely or make certain they are properly re-secured and tightened.

WARNING

Transportation – Use of Lifting Devices

To avoid death, serious injury or equipment damage…

- Hoisting lugs or lifting eyes attached to the motor are designed for the weight of the motor only! Do not attach any additional loads!
- The motor must only be transported and lifted using the lifting eyes, in a position that is appropriate for its type of construction. Otherwise, it could fall over or slip in the lifting tackle.
- During suspended transport, two straps must be able to carry the entire load weight safely.
- When required use additional, suitable means of support for transportation, installation or removal.
- Always secure the support equipment to prevent it from slipping.

9. Storage

If the motor is not in service, store it according to the following conditions:

- Store the motor in a clean, dry, dirt-free, vibration free area.
- Storage temperatures of 10°C (50°F) to 50°C (120°F) must be maintained.
- Relative humidity must not exceed 60%.
- If vibration in the area exceeds 0.002 inch (0.05 mm) at 60 hertz, then vibration isolation pads are suggested to prevent brinelling of the bearings.
- Treat the unprotected shaft end and mating flange surfaces with a corrosion inhibitor that can be cleaned off prior to commissioning.
- Before placing the motor into service, visually inspect the motor exterior for evidence of deterioration during storage. Turn the motor shaft by hand to make sure the shaft turns freely.
- Motor space heaters, when provided, are to be connected and energized whenever there is a possibility that the storage ambient conditions will reach the dew point. Space heaters are optional. Remove motor from the storage container when the heater is energized.
- If the motor needs to be stored for extended periods, or if it is stored in less than favorable conditions, it is recommend that the winding insulation resistance be checked prior to commissioning (page 7).
- Even if stored in favorable conditions, the antifriction motor bearings and motor shaft seals may need to be replaced if the storage period is more than 4 years.

10. Safety Considerations

When installing, servicing or replacing electric motors it is important to be working in a “voltage-free” state. Observe the following safety rules.

Safety Rules

1. Disconnect the system. Disconnect the auxiliary circuits (brakes, space heaters, etc.).
2. Prevent reconnection (follow safe lock-out/tag-out practices).
3. Make sure that the equipment is at zero voltage.
4. Make certain the equipment is properly grounded and short-circuited.
5. Cover or isolate nearby components that are still electrically live.

To energize the system, apply the measures in reverse order.

Qualified Personnel

All work involved in the transport, connection, commissioning and maintenance of any NORD product must be carried out by qualified and responsible technicians.

For the purpose of this documentation, a qualified personnel is taken to mean a person or people who fulfill the following requirements:

- Through appropriate training and experience, they are able to recognize and avoid risks and potential dangers in their particular field of activity.
- They have been instructed to carry out work on the machine by the appropriate person responsible.
- They are responsible for knowing and complying with all applicable national, regional, and local work regulations and safety requirements.

10. Safety Considerations Ctd.

General Warnings and Cautions

⚠ DANGER

To avoid electrocution, injury or death, make certain all electrical devices (motors, brakes, variable frequency drives, etc.) are properly grounded, completely de-energized, and brought to a no-voltage condition prior to working on any electrical connections. Remember that most of these devices carry potentially dangerous energy levels for a period of time after power is removed. Always follow proper lock-out/tag-out procedures.

⚠ DANGER

Electrical machines contain dangerous voltage levels, electrically live parts, rotating surfaces and hot surfaces. To prevent injury, death or possible equipment damage always observe the following:

- Keep all safety covers and guards in place during operation. Remove and replace covers in compliance with the applicable safety regulations.
- Allow the machine to cool down before starting any work on it.
- Operate the machines properly.
- Perform regular maintenance on the machine.
- Secure and guard free-standing shaft extensions.

⚠ DANGER

Electrically Live Parts

Electrical machines contain electrically live parts. Fatal or severe injuries and substantial material damage can occur if the required covers are removed or if the machines are not handled, operated, or maintained properly.

⚠ WARNING

Rotating Parts

Electrical machines contain dangerous rotating parts. Fatal or severe injuries and substantial material damage can occur if the required covers are removed or if the machines are not handled, operated, or maintained properly.

⚠ WARNING

Hot Surfaces

Electrical machines have hot surfaces. Fatal or severe injuries and substantial material damage can occur if the required covers are removed or if the machines are not handled, operated, or maintained properly. Allow the machine to cool down before starting any work on it.

⚠ WARNING

Maintain Proper Cooling

Operating the motor without the intended cooling fan may cause overheating and result in very hot surfaces, personal injury and material damage. Never commission a motor intended to be fan cooled when it is missing the shaft-driven fan or external blower assembly.

⚠ DANGER

Condensation Drain Holes (Optional)

Inserting objects into the condensation drain holes can damage the winding and can result in death, serious injury and damage to property!

- Before opening sealed drain holes, make sure the motor is in a no-voltage condition. Close the condensation drain holes before re-commissioning.
- Exercise caution around drain holes that are intended to be left open, especially when the motor is energized.

IMPORTANT NOTE

Before start-up check the following:

- All electrical connections are secure, well grounded and properly made.
- The motor is rotating in the correct direction (when de-coupled from the driven load).
- There are no temperature-sensitive parts (cables etc.), in contact with motor enclosure.
- Condensation drain holes are always located at the lowest point of the motor.

11. Checking the Insulation

Before putting the motor into operation for the first time, after a lengthy period of storage or standstill (approx. 6 months), the insulation resistance of the winding should be checked.

WARNING

During or directly after measurement the motor connection terminals carry hazardous voltages. Fatal or severe injuries and substantial material damage can occur if the required covers are removed or if the machines are not handled, operated, or maintained properly.

A. Control

The insulation resistance of new, cleaned, or repaired motor windings against the grounded housing and against one another should be > 200 Mega-Ohms.

B. Measurement

Using a Mega-Ohm meter apply a DC voltage of 500 VDC to the motor winding for a period of 60 seconds and record the winding insulation resistance compared to ground.

- The 500 VDC test voltage is applicable to low voltage motors up to 1000 VAC.
- When performing this test the temperature of the windings should be 25°C ± 15°C (77°F ± 27°F).

C. Verification

- If the insulation resistance of the winding is less than 50 Mega-Ohms, the cause may be moisture. The windings should be dried and the test should be repeated.
- After any lengthy period of operation the insulation resistance may drop. So long as the measured value does not fall below the critical value of 50 Mega-Ohm, the motor may continue to be operated.
- If the measured value falls below the critical 50 Mega-Ohm level, the cause must be established and the windings or winding sections must be cleaned, dried, repaired, or replaced as needed.

12. Bearing Lubrication

NORD motor frame sizes 63 up to and including 225 are normally supplied with internally grease lubricated bearings and require no lubrication during normal operation.

NORD motor frame sizes 250 and larger are supplied with grease fittings for re-greasing the motor bearings.

IMPORTANT NOTE

Motors with grease fittings are normally supplied with a label indicating the grease type used, the suggested re-lubrication interval, and the amount of new grease to be applied. General bearing maintence guidelines are listed in Table 3.

Typical motor bearing grease is an NLGI No. 2 consistency, high grade product with a polyurea base thickener, synthetic or blended mineral/synthetic oil, and stabilizing agents to protect against heat and oxidation.

Table 3 – Motor Bearing Maintence Guidelines

Frame Size	Power	Poles	Re-greasing Interval
63-225	0.16-60 HP (0.12-45 kW)	All	Maintence Free
250 to 280	75-125 HP (55-75 kW)	2	4000 h
		4 to 8	8000 h
315	150-250 HP (132-200 kW)	2	3000 h
		4 to 8	6000 h

NOTICE

When re-greasing motor bearings do not to mix different greases without verifying the compatibility with a reputable grease lubrication supplier. Mixing incompatible products can lead to bearing failure.

13. Mechanical Installation

Integral motors, NEMA C-face motors, and IEC flange mounted motors must be rigidly secured to their mating connection surface using all fastening screws tightened to the proper bolt torque. It is good practice to apply a medium strength thread- locking agent (Loctite® 242) to the mounting screws.

Foot mounted motors must be securely installed to a rigid and level foundation or mounting surface to minimize vibration and maintain alignment between the motor and shaft load. All mounting hole locations must be utilized. Tighten all hold down screws or bolts to the proper bolt torque.

NOTICE

Failure to provide a proper mounting surface may cause vibration, misalignment and bearing damage.

Accurate alignment and proper balancing of output devices (couplings, belts, pulleys, etc.) is required to assure quite, low vibration, trouble free operation. When the motor is directly coupled to a gear drive or a driven machine make sure that the motor shaft and driven machine shaft are aligned with one another axially.

NOTICE

Inaccurate alignment may lead to bearing damage, excessive vibrations and shaft breakage.

IMPORTANT NOTE

For motor replacement guidelines see section 20 on page 15 and section 21 on page 16.

14. Electrical Connections

⚠ DANGER

To avoid electrocution, injury or death, make certain all electrical devices (motors, brakes, variable frequency drives, etc.) are properly grounded, completely de-energized, and brought to a no-voltage condition prior to working on any electrical connections. Remember that most of these devices potentially dangerous energy levels for a period of time after power is removed. Always follow proper lock-out/tag-out procedures.

IMPORTANT NOTE

External motor brakes have their own connection requirements as indicated in the appropriate brake instruction manuals.

⚠ WARNING

If the motor has an integral brake, make certain there is no load connected to the driven equipment before releasing the brake. Otherwise serious injury, death, or damage to the equipment may result.

- The supply voltage and frequency must agree with the motor nameplate data.
- Always feed the connecting leads into the terminal box using appropriate mating cable glands. The mating connection cables and cable glands should be suitable for temperatures ≥ 194°F (90°C).
- Provide the ends of the connecting leads and ground lead with cable lugs or curved ring eyelets before connecting them to the terminal board.
- Make certain that the wiring connections and arrangement of the terminal board jumpers conform to the appropriate wiring diagram as provided in the motor terminal box and/or page 9 of this manual.
- Tighten the terminal board screw connections on the on the main terminal board per the table below.

Table 4 – Tightening Torque: Terminal Board and Grounding Screws

Thread Size	Nut Size [mm]	Tightening Torque [lb-ft]	Tightening Torque [Nm]
M4	7	0.6-0.9	0.8-1.2
M5	8	1.3-1.8	1.8-2.5
M6	10	2.0-3.0	2.7-4
M8	13	4.0-5.9	5.5-8
M10	17	6.6-9.6	9-13
M12	19	11.8-14.8	16-20

- Upon final assembly, the terminal box cover must be sealed so that it is dust-tight and water-tight.

Table 5 – Tightening Torque: Terminal Box Cover Screws

Thread Size	Tightening Torque [lb-ft]	Tightening Torque [Nm]
M4	0.6-0.9	0.8-1.2
M5	0.9-1.3	1.2-1.8
M6	1.1-1.8	1.5-2.5
M8	2.2-3.7	3.0-5.0

15. Direction of Rotation

The motor shaft rotation is defined per IEC 600034, Part 8. The motor shaft rotation can be controlled by the way the incoming line power is connected. When connecting the incoming line power in phase order to the terminal block posts, T1 (U1), T2 (V1), and T3 (W1) respectively, the motor shaft rotation will be clockwise when viewing the motor shaft at the drive-end.

15. Wiring Diagrams - Motor & Motor Option Connection Diagrams

NORD Frames 63-225
230 / 460V, 60Hz, 3Ø | 200 / 400V, 50Hz, 3Ø

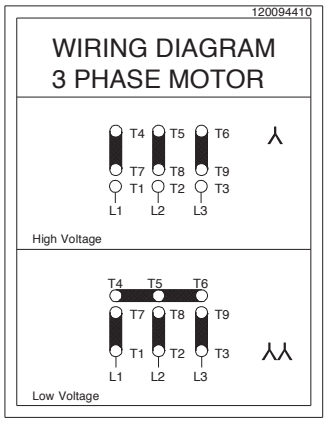

NORD Mfg by Siemens - Frames 200+
230 / 460V, 60Hz, 3Ø | 200 / 400V, 50Hz, 3Ø
190 / 380V, 60Hz, 3Ø

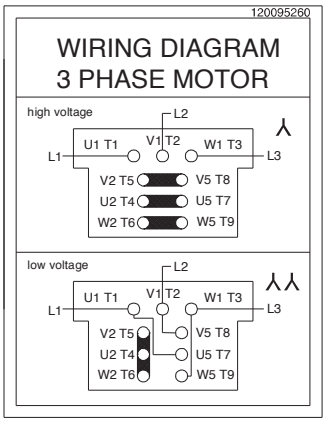

NORD Mfg by Siemens - Frames 200+
230 / 460V, 60Hz, 3Ø | 200 / 400V, 50Hz, 3Ø
190 / 380V, 60Hz, 3Ø

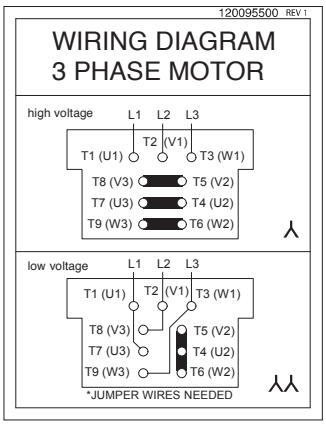

NORD Frames 63-225
460 / 800V, 60Hz, 3Ø | 230 / 400V, 50Hz, 3Ø
208 / 360V, 60Hz, 3Ø | 400 / 690V, 50Hz, 3Ø
332 / 575V, 60Hz, 3Ø

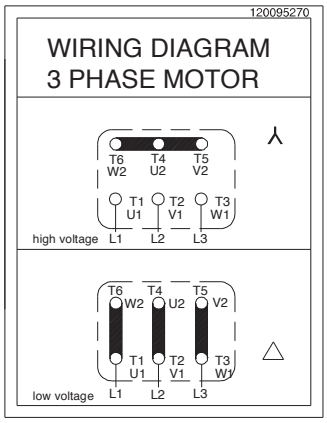

NORD 2 - SPEED MOTORS
SINGLE WINDING (4-2 & 8-4 POLE)

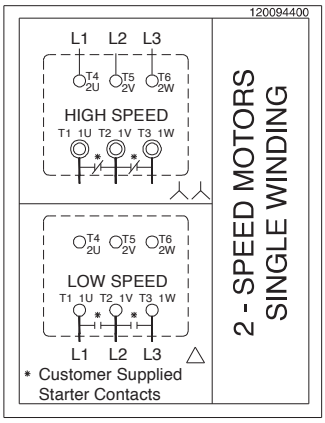

NORD 2 - SPEED MOTORS
DUAL WINDING (8-2 POLE)

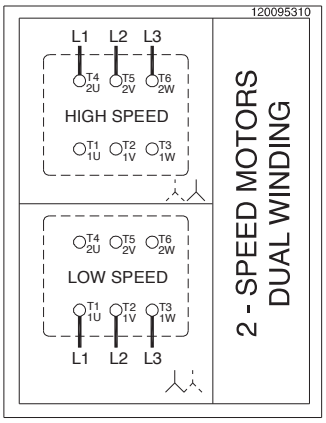

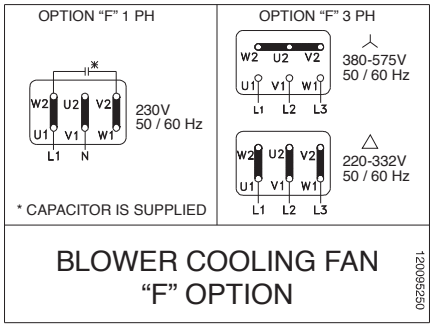

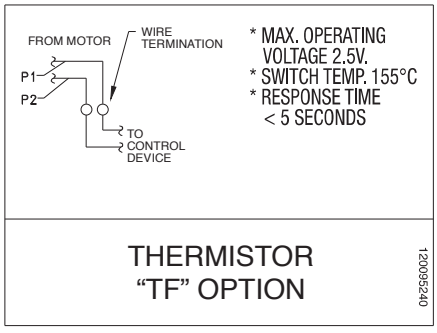

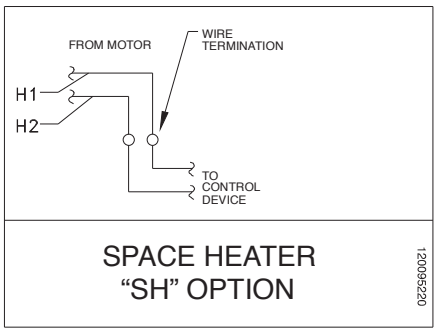

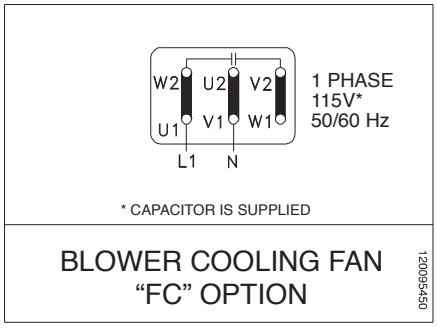

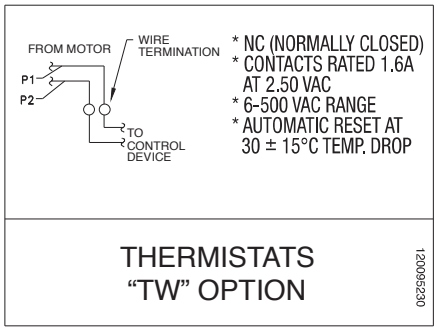

15. Wiring Diagrams Ctd. - Single Phase Motor Connection Diagrams

Motor Frame Sizes 63-90
230V, 50Hz, 1Ø

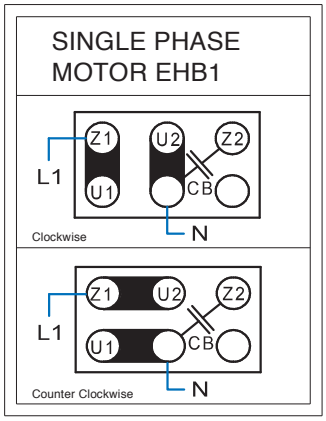

Motor Frame Sizes 63-90
230V, 50Hz, 1Ø

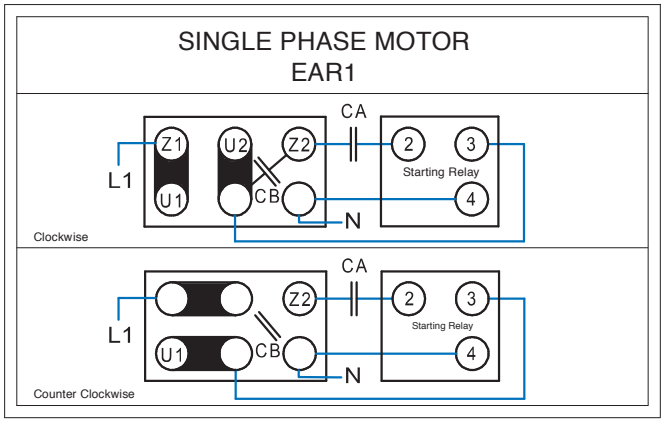

Motor Frame Sizes 63-90
230V, 50Hz, 1Ø

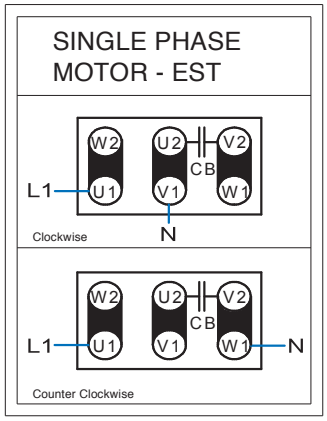

Motor Frame Sizes 63-90
115 / 230, 60Hz, 1Ø

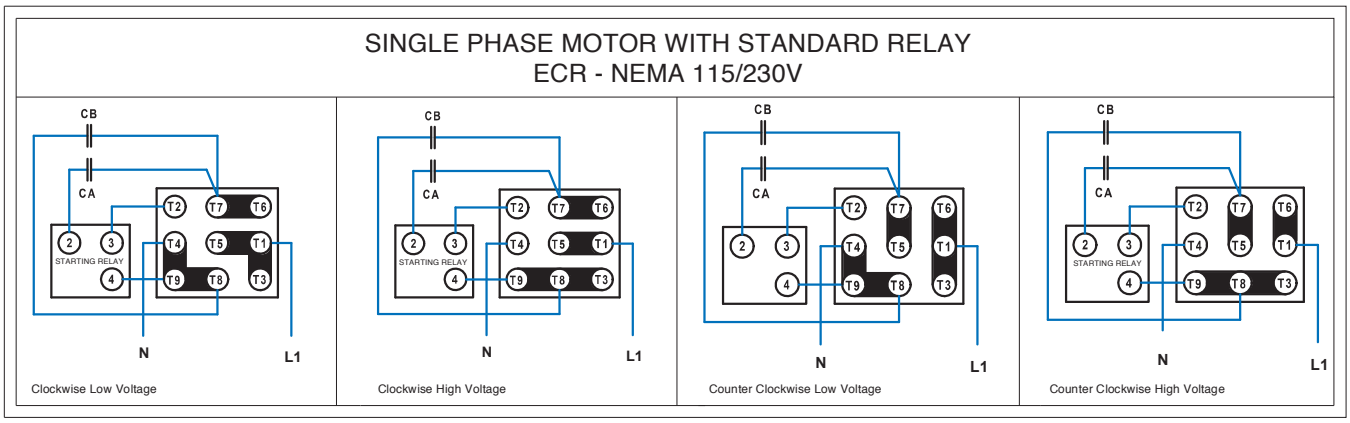

Motor Frame Sizes 63-90
115 / 230, 60Hz, 1Ø

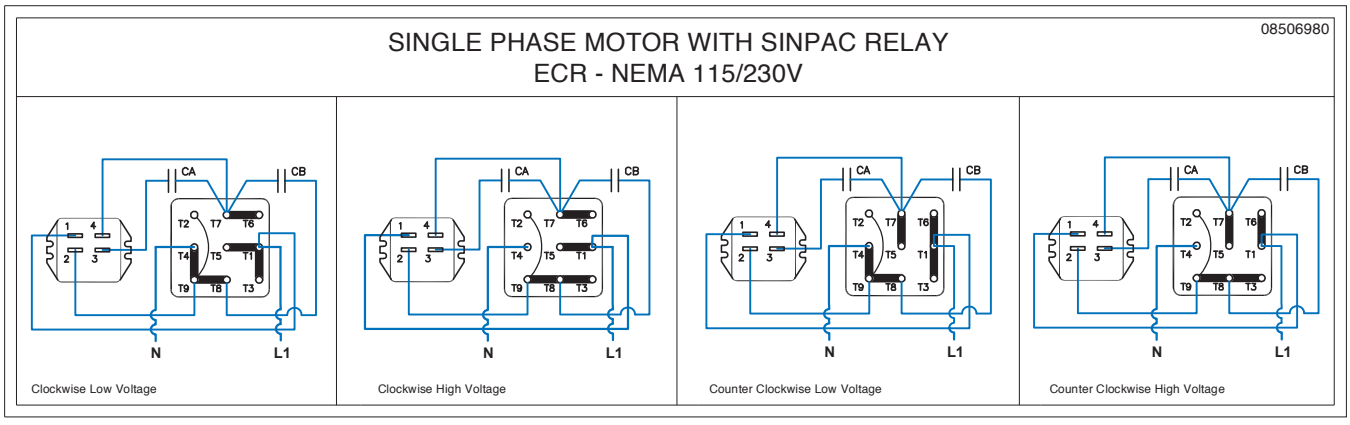

16. Motor Accessories

Blower Cooling Fan (Option F & FC)

- Connection Diagram Shown on page 10
- Option FC is 1-phase, 115V
- Option F has capability of 1 phase by connecting a supplied capacitor

Table 6 – Option F & FC

Option F – 3ph & 1ph 220-575V 50/60Hz

Motor Frame	60Hz Ratings			50Hz Ratings		
	Voltage [V]	Current [A]	Power [W]	Voltage [V]	Current [A]	Power [W]
Single phase connection - ⊥ (Δ Delta)						
63	230 – 277	0.11	38	230 – 277	0.10	27
71	230 – 277	0.12	41	230 – 277	0.10	28
80	230 – 277	0.13	44	230 – 277	0.11	29
90	230 – 277	0.25	88	230 – 277	0.26	72
100	230 – 277	0.28	88	230 – 277	0.26	70
112	230 – 277	0.31	107	230 – 277	0.26	73
132	230 – 277	0.27	89	230 – 277	0.29	82
160 - 225	230 – 277	0.41	140	230 – 277	0.45	128
Three phase low-voltage connection - (Δ Delta)						
63	220 – 332	0.08	23	220 – 290	0.10	27
71	220 – 332	0.08	24	220 – 290	0.10	30
80	220 – 332	0.08	25	220 – 290	0.01	29
90	220 – 332	0.21	64	220 – 290	0.28	86
100	220 – 332	0.21	66	220 – 290	0.27	86
112	220 – 332	0.23	70	220 – 290	0.27	85
132	220 – 332	0.25	74	220 – 290	0.32	96
160 - 225	220 – 322	0.49	165	220 – 290	0.52	155
Three phase high-voltage connection - (Y)						
63	380 – 575	0.04	23	380 – 500	0.05	29
71	380 – 575	0.04	25	380 – 500	0.05	30
80	380 – 575	0.04	26	380 – 500	0.05	29
90	380 – 575	0.12	62	380 – 500	0.16	82
100	380 – 575	0.12	66	380 – 500	0.16	83
112	380 – 575	0.13	70	380 – 500	0.16	82
132	380 – 575	0.14	75	380 – 500	0.18	96
160 - 225	380 – 575	0.28	165	380 – 500	0.29	155

Option FC – 115V 50/60Hz 1ph

Motor Frame	60Hz Ratings			50Hz Ratings		
	Voltage [V]	Current [A]	Power [W]	Voltage [V]	Current [A]	Power [W]
Single Phase Connection - ⊥ (Δ Delta)						
63	100 – 135	0.23	42	100 – 135	0.30	42
71	100 – 135	0.23	47	100 – 135	0.30	44
80	100 – 135	0.27	57	100 – 135	0.30	43
90	100 – 135	0.46	102	100 – 135	0.57	78
100	100 – 135	0.53	105	100 – 135	0.54	78
112	100 – 135	0.60	115	100 – 135	0.55	80

16. Motor Acc. Ctd. - Motors with Thermal Protection

Effective July 15th, 2016 many newly manufactured NORD motors that require a thermal protection device will use WAGO® Series 221 Series Compact Splicing Connectors. These connectors will be used for splicing the leads of the thermal protection option supplied by NORD to the customer supplied control device.

- The WAGO® connector will facilitate assembly of NORD 63-132 frame, 60Hz, CUS approved motors
- An oversized brake terminal box and secondary 2-post wire termination strip will no longer be required.
- NORD will supply (2) Wago® Series 221, 2 conductor splicing connectors for each motor requiring thermal protection (NORD P/N 18251607)

Table 7 – Motors Receiving the WAGO® Connector

Motor Supplier	NORD
Frame Size	63 to 132
Type	CUS
Thermal Protection Option	TW, TF, PT100, KTY
Motor Connection	Wye-Wye/Wye (YY/Y)
Voltage – Hz	230/460V – 60 Hz
Brake Motors Affected	No
EKK Small Terminal Box	Not possible (space limited

Table 8 – WAGO® Series 221 Connector Ratings

Wire Size	12-24 AWG (solid stranded or fine stranded) 0.14 - 4mm² (fine stranded) 0.2 - 2mm² (solid stranded)
Rated Voltage	600V
Rated Current	20A
Operating Temp.	105°C (221°F)
Global Approvals	cULus, ENC 05, EAC, PSE

UL Certificate E69654

Operation of WAGO® Series 221 Connector

1. Strip the wire/s to be connected to 11 mm (0.43 in).
2. Open up the lever of the lever-nut, place the wire in the receptical and close the clamp.
3. Repeat for the additional wires being joined.

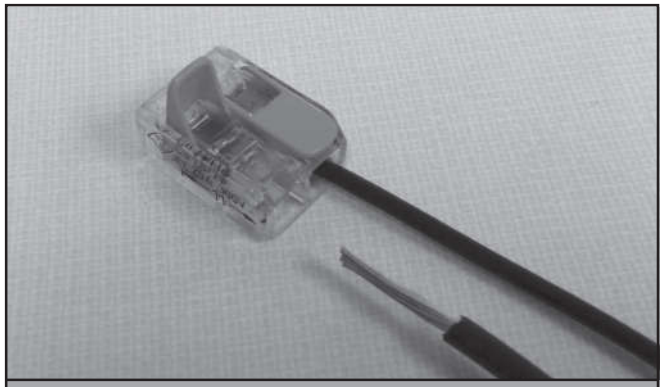

WAGO® receptical in the open position

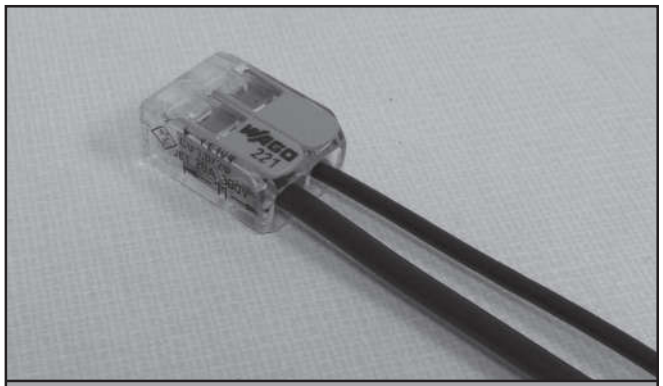

WAGO® receptical in the closed position

The WAGO Connector remains optional for the following NORD motors:

Brake Motors - An oversized conduit box is utilized with a secondary 2-post wire termination block for the thermal protection option

Delta/Wye (Δ/Y) Connected Motors - These utilize an 8 post terminal box (6 primary posts for the supply power and 2 auxillary posts for thermal protection)

Motors 160 Frame and Larger - The terminal box is large enough to allow the use of a secondary 2-post wire termination block for your thermal protection device.

Thermostats (TW & 2TW)

Table 9. TW & 2TW options, Thermostats

Standard connection	Series connected, one per phase
Contact	NC (Normally Closed)/ Auto Re-setting
Response Temperature (Option TW)	311 °F (155 °C) Shut-Off Device
Response Temperature (Option 2TW)	311 °F (155 °C) Shut-Off Device + 266°F (130 °C) Alarm Device
Nominal Current	1.6 Amp at 250 V
Resistance	< 50 mΩ
Switch Rebound	< 1ms
Insulation Rating	2000 VAC
Cycles	10,000 max
Lead Identification (inside terminal box)	P1 and P2 or TB1 and TB2 / 2TB1 and 2TB2

Motor thermostats or bi-metallic switches can be wired directly into the control circuit without a separate control module or tripping device. Thermostats operate on a relatively high control voltage so they are less sensitive to voltage interference from the main power supply. Often one can run thermostat leads and motor power leads next to each other when using the appropriate shielded cable. The installer is responsible to wire the thermostats into the motor control circuit. The leads may be labeled as indicated below.

Thermistors (TF)

Table 10. TF option, Thermistors

Standard Connection	Three devices, series connected, one per phase
Type	Positive temperature coefficient (PTC)
Transition Temperature	150°C±5 °C
Resistance	20… 500Ω (below transition) > 4 kΩ (above transition)
Reed Current	< 1mA
Max Voltage	30V
Lead Identification (inside terminal box)	P1 and P2 or TP1 and TP2

With a separate control module or tripping device (ex. Kirwan INT69) thermistors are used to sense motor overload/ over temperature conditions by converting the critical operating temperature limit into large internal resistance change. Due to their small size, heat sink construction, and high change in resistance value, minor resistance variations caused by relatively long lead runs can be tolerated. This feature also allows for one controller to be used for several temperature sensing locations. Many variable frequency drives come with on-board thermistor inputs. NORD does not supply the thermistor control module.

IMPORTANT NOTE

- Thermostats and Thermistors will automatically reset.
- All wiring must be completed by qualified personal and adhere to all local codes.

16. Motor Acc. Ctd. - Space Heaters (Option SH)

- Connection Diagram shown on Page 9
- Space Heaters are mounted directly on the motor winding
- The leads are brought into the terminal box and labeled H1 and H2
- They require a separate voltage supply and must not be energized when the motor is energized
- The heaters will keep the winding of the motor approximately 5°C above the surrounding ambient

Table 11. Space Heater Data

Frame Size	Wattage	Voltages	Heater Strips/MTR
63 & 71	18W	110V	1
		230V	
		460V	
80	25W	110V	1
		230V	
		460V	
90 – 112	50W	110V	2
		230V	
		460V	
132-180	100W	110V	2
		230V	
		460V	
200 & 225	120W	110V	2
		230V	
		460V	

Encoder (Option IG)

- Most standard encoders will be enclosed inside the fan cover
- Incremental, Quadrature, Differential, Marker Channel
- IP66 Protection
- IG1 = 1024PPR, IG2 = 2048PPR, IG4 = 4096PPR
- TTL/RS422, HTL/Push-Pull, Line Driver.
- 5V or 10-30V available.
- Absolute encoders also available.
- Seperate encoder wiring instructions are provided by NORD.

17. Inspection

Inspect the motor after every 500 operating hours. Please use table 12 below for inspection guidelines.

⚠ CAUTION

If it is necessary to clean the motor exterior, do not use shop air. Shop air can force contaminents into the motor and may cause parts damage or result in blowing debris causing injury.

Table12. - Motor Inspection Guidelines

Inspect	Check	Action
Motor Exterior	Check the external surfaces for contamination. Accumulation of dirt and fibrous deposits must be removed.	Clean the motor external surfaces using clean, lint-free cloths.
		Clean deposits from between cooling fins using a vacuum cleaner and a stiff-bristled nylon brush.
	Check the external surfaces for oil film and greasy deposits.	Clean the oil film and greasy deposits from the motor surface using clean, lint-free cloths.
		If necessary, moisten the cloth with an approved non-flammable, residue-free solvent. Do not pour solvent on the motor.
	Check for evidence of damage or overheating.	If the motor has physical damage, replace the motor.
Motor Mountings	Make sure the mounting hardware is secure.	If the mounting hardware is not secure, check the motor/gearbox alignment, and tighten the mounting hardware.
Motor Electrical Connections	Check that all electrical connections are secure.	If the electrical connections are not secure, tighten them.
	Check the electrical connections for evidence of arcing.	Loose electrical connections can cause arcing, which is evident by discoloration and charring. If you find evidence of arcing, replace the damaged connections.
Insulation Resistance	Using an ohmmeter, check and record the resistance of motor winding insulation.	Compare the current resistance reading to previous readings. If the resistance drops significantly, perform an internal inspection for insulation damage or deterioration.
Motor Brake	On motors that have a brake, use a feeler gauge to check the air gap in between the brake pad and the rotor according to the appropriate user manual.	If the air gap exceeds the maximum allowed for that brake configuration provided in the manual, adjust the air gap or replace the brake pad according to user manual U35000.

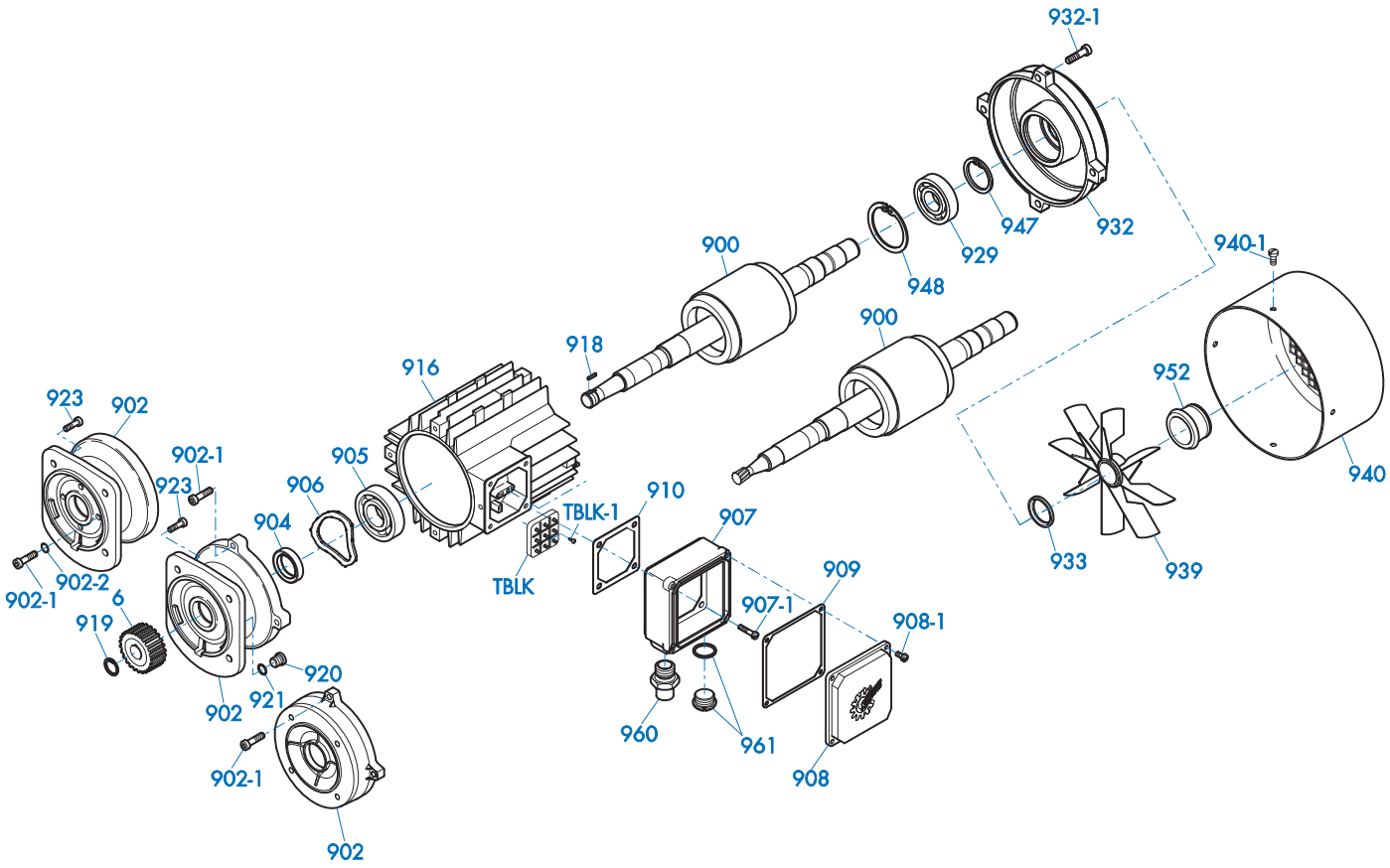

Part Number	Part Description	Qty per Assembly
6	Input Pinion	1
900	Rotor Assembly	1
902	A-Endbell	1
902-1	Screw	4
902-2	Dubo Seal	4
904	Oil Seal	1
905	Bearing	1
906	Preload Spring	1
907	Terminal Box Frame	1
907-1	Screw	4
908	Terminal Box Cover	1
908-1	Screw	4
909	Gasket - Terminal Box Frame	1
910	Gasket - Terminal Box Cover	1
916	Stator	1
918	Key	1
919	Retaining Ring	1
920	Oil Plug	1

Part Number	Part Description	Qty per Assembly
921	Gasket	1
923	Screw	4
929	Bearing	1
932	B-Endbell	1
932-1	Screw	4
933	Oil Seal	1
939	Fan	1
940	Fan Cover	1
940-1	Screw	4
947	Retaining Ring	1
948	Retaining Ring	1
952	Fan Clip	1
960	NPT Thread Adapter	1
961	Plug (includes O-ring)	1
TBLK	Terminal Block	1
TBLK-1	Screw, Terminal Block Mounting	2
	Jumper Bar (not illustrated)	AR

19. Repair

Reference the parts list drawing on page 14 for clarification.

A. Disassemble the motor according to the general exploded view in PARTS INFORMATION. Disassemble only as far as necessary to replace the failed parts.

B. Whenever the motor is disassembled, clean all dust and contamination from the motor interior using a vacuum cleaner and a soft-bristled nylon brush.

C. The following parts must be replaced if they are removed:

- Oil seal (904), Oil seal (933)
- Gasket (909), Gasket (910), Gasket (921)
- Gasket on plug (961)
- Self-locking screws (907-1, 908-1, 923, 932-1, 940-1)
- Dubo Seals (902-2)

D. If the following parts are removed, inspect them, and replace them if they are deformed or damaged:

- Retaining ring (919), Retaining ring (947), Retaining ring (948)
- Fan clip (952)

20. Removing and Replacing Integral Motors

Reference the parts list on Page 14 for clarification.

A. Disconnect the power to the electric motor. Make certain the motor is properly grounded, de-energized and secured with a lock-out/tag-out device.

B. Drain the oil from the mating gearbox, or rotate the motor/gearbox assembly so that the motor is up, to prevent oil from spilling from the gearbox when the motor is removed.

C. Support the motor and prepare it for removal. Steady the motor and support it. For larger motors, use of mechanical lifting or support devices to may be appropriate.

D. Remove the fastening screws that hold the motor to the reducer input.

IMPORTANT NOTE

Most integral motor installations have mounting bolts accessible from the motor exterior. If the bolts are not clearly visible, unbolt the input flange from the gearbox. Remove the bolts securing the motor to the reducer input flange, and discard the old DUBO sealing rings that were under the screw heads.

E. Maintain motor shaft alignment and move the motor directly away from its mounting surface until the motor shaft and mating input gear clear both the internal gear mesh and reducer input.

F. Remove and discard the old flange gasket.

G. Clean the gasket faces on the motor and gearbox, making sure no cleaning debris enters the gearbox.

H. Check the replacement motor to make sure the motor flange, motor shaft, and motor pinion are identical to the motor that was removed.

I. Place a new gasket between the gearbox and new motor.

J. Position the motor on the gearbox, making sure the input pinion meshes with the input gear. Rotate the motor as necessary to align the bolt holes and seat the motor flange. Make sure the gasket remains properly aligned and seated

K. Apply a medium strength thread locking compound to the bolt threads. Install the bolts and tighten them to the appropriate torque.

IMPORTANT NOTE

If the motor/gearbox installation uses an input flange, first mount the input flange to the motor using the four mounting bolts and NEW DUBO sealing rings under the head of each fastening screw. Make sure the fastening screws are clean and apply new thread sealant if necessary.

L. Check the gearbox oil level in accordance with the appropriate User Manual/s. If necessary fill or add oil to the gearbox.

NOTICE

Do not mix oil types. Mixing oil types may lead to component damage and diminished performance. Consult NORD for assistance or reference oil type listed on gearbox tag.

M. Re-establish the electrical connection to the motor.

N. Observe the subsequent start-up closely to make certain the equipment is operating properly and there are no seal or gasket leaks.

21. Removing and Replacing NEMA C-Face or IEC Fange-Mounted Motors

For further clarification of these instructions, reference the parts list on Page 14 of this manual.

A. Disconnect the power to the electric motor. Make certain the motor is properly grounded, de-energized and secured with a lock-out/tag-out device.

B. Support the motor and prepare it for removal. Steady the motor and support it. For larger motors, use of mechanical lifting or support devices to may be appropriate.

C. Remove the fastening screws that hold the motor to the C-face or IEC mounting flange.

D. Maintain motor shaft alignment, and move the motor directly away from its mounting surface until the motor shaft and mating coupling clear the mounting flange surface of the driven equipment.

E. Measure and record the proper placement of the motor shaft coupling prior to removing it from the old motor.

F. Make sure the new motor shaft, key and key slot are free of all nicks, burrs, and lubrication or grease.

G. Install the new shaft key on the new motor. If the shaft key is not captured or if an open-ended key slot is utilized it is good practice to secure the key into the key slot with a medium strength thread locking agent or alternatively one may stake the key in place.

H. Re-install the coupling on the new motor shaft, making sure the placement of the coupling is in the same location as it was on the old motor (See Step E).

I. Clean all old gasket material, sealants, contamination, and corrosion from the flange surface on the driven equipment.

J. If the motor is utilized in a wet or wash down environment apply a sealing gasket or gasket eliminating compound to the mating flange surface, as would seem most appropriate for the application.

K. Support the new motor and mount it flush against the mating flange surface of the driven equipment.

L. Apply a medium strength thread locking agent to the bolt threads.

M. Install the bolts and tighten them to the appropriate torque.

N. Re-establish the electrical connection to the motor.

O. Observe the subsequent start-up closely to make certain the equipment is operating properly.

22. Testing

IMPORTANT NOTE

NORD electric motors do not require periodic testing. However, if a motor is removed from its installation, NORD recommends that the motor be checked according to the following static and dynamic testing procedures before it is reinstalled. Finding a condition that will require future repair before the motor is reinstalled decreases the overall maintenance time.

This section provides general test information and functional checks for the types of motors covered by this manual. Read and understand the tests and checks before performing them on your motor.

Record and date all measurements taken.

If the motor fails any of the test procedures provided below, use the troubleshooting guide to determine the motor problem.

Static Testing

A. The motor can only be static tested if it is disconnected from the component it drives and securely mounted on a fixture or mounting plate. These tests are usually conducted when a motor has been removed for any reason other than failure

B. Turn the motor shaft slowly by hand. Feel and listen for evidence of a failed bearing, which is indicated by a rough feel as the shaft rotates, and by noise.

C. Check for smooth rotation, with no evidence of binding or catching. If the shaft does not rotate smoothly, or binds or catches, the bearings are worn or failing, lack lubrication, or are contaminated.

D. Check the motor shaft for side play by applying pressure at right angles to the shaft in several places around the circumference. If the shaft moves perceptibly, the front bearing may be worn.

Dynamic Testing

A. Find the motor voltage and rated load current values as listed on the motor nameplate.

B. Using a volt-ohmmeter, verify that the motor power supply is in the correct range.

C. Run the motor with no load. As the motor is operating, listen for unusual motor noise and check for excessive vibration. Vibration and motor noise are indications of bearing contamination, lack of lubrication, damage, or failure.

D. Use an ammeter to measure the no-load current. Record the no-load current for comparison with previous readings, and for reference during future testing.

E. If the motor passes the no-load test, operate the motor at rated load and check and record the current.

F. Check the motor operating temperature at rated load. If the motor operates at a higher than normal temperature, the motor may be damaged, overloaded or failing.

23. Troubleshooting

Fault	Likely Cause	Corrective Action
Motor fails to start.	• Motor is mis-wired • Brake is may not be releasing. • Fan guard damaged and contacting fan. • Motor protection device has tripped or does not switch • 1-Ph Capacitor or start switch has failed.	• Verify and correct motor wiring. • Troubleshoot brake per User Manual U35000. • Replace damaged fan guard. • Check motor protection device for correct setting and correct error. • Discharge capacitor and use a volt-ohm meter to check the capacitor for an open circuit - replace if needed. Inspect switch and connections. Replace if contacts look burned or pitted.
Fuses blow or motor protection faults immediately.	• Short circuit in line. • Lines connected incorrectly. • Fuse or circuit breaker tripped. • Motor is overloaded or equipment jammed. • Stator is shorted or went to ground.	• Rectify short circuit. • Check circuit diagram and make corrections. • Replace fuse or circuit breaker. • Make sure load is free. Verify motor amp draw compared to nameplate rating. • A damaged or blown stator will show a burn mark. Stator must be repaired or replaced.
Motor hums and has high current consumption	• Brake may not be releasing. • Rotor may be rubbing stator. • Defective or incorrect stator winding.	• Troubleshoot brake per User Manual U35000. • Send motor to a repair specialist.
Severe speed loss under load or excessive acceleration time.	• Overload. • Excessive voltage drop. • Damaged or failing motor bearings. • Damaged or worn gear unit. • 1-Ph Capacitor or start switch has failed.	• Check load conditions and make certain system is unobstructed. Reduce load or consider a larger motor. • Verify service voltage is within specification. Check if nearby equipment is affecting incoming power. Make sure connection harness and wiring is adequate. • Replace motor bearings. • Replace or repair damaged gear unit. • See instructions under “Motor fails to start”.
Motor runs the incorrect direction.	• Incorrect wiring.	• Rewire motor according to system schematic and/or switch two incoming motor phases.
Motor heats up excessively or thermal overload protection trips	• Overload. • Ambient temperature is too high. • Inadequate cooling. • Operation is outside the allowed duty cycle. • Motor protection device may be defective. • Excessive supply voltage. • System short or damaged stator.	• Make sure load is free. Verify motor amp draw compared to nameplate rating. Reduce load or consider a larger motor. • Do not operate above the rated conditions. • Correct cooling air supply. Open and clear cooling air passages. Retrofit with forced ventilator fan if needed. • Adjust operating duty cycle or contact a specialist to select a suitable motor or drive. • Replace motor protection device. • Adapt motor supply voltage. • Check for loose, cut or damaged wires. Check stator winding for defects or burn damage.
Excessive Noise or Vibration	• Motor bearings contaminated or damaged. • Excessive motor shaft end play. • Misaligned or imbalanced load.	• Test motor by itself. If bearings are bad noise may be heard or roughness detected. Replace bearings. Add lubrication if bearings have grease fittings. • Check shaft endplay with motor and system power disconnected. If shaft movement is excessive replace motor shaft bearings. • Check all mating shaft connections for proper alignment and correct all imbalanced load conditions.
1 Ph Start Capacitor Failures	• Motor is not coming up to speed quickly enough. • Motor is being cycled frequently • Start switch is defective or damaged.	• Verify motor size to load conditions. Motor should come up to speed in no more than 2-3 seconds. • Verify duty cycle and consult specialist for recommendations. • Replace start switch.
1 Ph Run Capacitor Failures	• Possible power surge to motor caused by transient voltage or lightening. • Excessive ambient temperature.	• Install proper surge protection. • Verify ambient conditions do not exceed nameplate value.

General Instructions

This manual provides information on brake rectifiers along with typical connection diagrams for NORD motors with brakes. It is not intended to include a comprehensive listing of all details or procedures required for installation, operation, maintenance or troubleshooting.
NORD utilizes brakes manufactured by Precima and Mayr. NORD recommends referencing the supplier documentation for information regarding operation and maintenance.

- BRE5 - BRE150 and BRE1200 sizes utilize Precima brakes as standard
- BRE250 - BRE 800 sizes utilize Precima or Mayr

Obtaining Brake Supplier Documentation

The myNORD Serial Number Lookup tool provides unit documentation specific to your product. Simply enter the sales order number from the product nameplate to access all relevant operation & maintenance manuals including supplier-specific documentation.

https://shop.nord.com/US-en/mynord/documentcenter#?order=&language=EN-US

PDF copies of all NORD or supplier-specific manuals are also available on our website. Filters are available to drill down to the specific required documentation.

Brake Control Rectifiers

NORD brake control rectifiers convert AC voltage to DC voltage. Rectifiers are used because most applications require AC voltage to power the motor, but DC power is required to power the brake and DC power is not typically available. NORD brake motors typically include the rectifier located inside the terminal box.

Rectifier Advantages

- Individual power source for each brake.
- Compact size, mounted inside the terminal box.
- Multiple types, voltage options and release/engagement modes available.
- Mountable in a separate control cabinet.
- Integral protection against voltage spikes.

Model	Type	Part No.	Color	Input Voltage V_{AC} ± 10%	Rated Current A_{DC} (40°C)	Rated Current A_{DC} (75°C)
GVE20L	Full-wave	19141000	Black	110-275	1.5	1.0
GVE20V	Full-wave	19141030	Black	110-275	1.5	1.0
GHE40L	Half-wave	19141010	Yellow	200-480	2.0	1.0
GHE40V	Half-wave	19141040	Yellow	200-480	2.0	1.0
GHE50L	Half-wave	19141020	Gray	200-575	2.0	1.0
GHE50V	Half-wave	19141050	Gray	200-575	2.0	1.0
GUE40V	Dual-wave	19140300	Black	190-460	0.7	0.5
PMG500	Push-Hybrid	19140200	Black	200-500	4.0	2.8

Rectifier electronics are sealed for moisture-protection; electronics on models ending with the suffix "V" are resin-encapsulated to provide added protection if water should get into the motor terminal box.

Rectifier Types

Full-wave rectifier [GVE]:
A rectifier in which both the positive and negative half-cycles of the AC input signal are rectified to produce a uni-directional DC current supply to the load or the brake. The output voltage is 90% of the input voltage ($V_{DC} = 0.90 \times V_{AC}$).

Half-wave rectifier [GHE]:
A rectifier in which only alternate half-cycles of the AC input signal are rectified to produce a uni-directional DC current supply to the load or the brake. The output voltage is 45% of the input voltage ($V_{DC} = 0.45 \times V_{AC}$).

Dual Wave Rectifier [GUE]
A rectifier that can be wired as either a full-wave rectifier or a half-wave rectifier depending upon how it is connected to the AC input signal.

IMPORTANT NOTE

If the motor is connected to a frequency inverter, soft start, or is a two-speed motor, then seperate AC power must be supplied to the brake rectifier.

Rectifier Types [Ctd.]

PMG 500 Push-Hybrid rectifier [PMG]:
A fast-acting or push-hybrid brake rectifier provides an initial "push" in the form of a timed full-wave brake-release function, which is then followed by a continuous half-wave brake-holding function. There are two ways to apply these rectifiers as follows:

- "Overexcitation" of the brake coil provides faster brake release or improved cycling capacity. The DC voltage of the brake coil is determined based upon using a half-wave rectifier. The output voltage is 45% of the input voltage ($V_{DC} = 0.45 \times V_{AC}$).
- "Reducer-Power Holding" of the brake coil maintains the brake in a released state by using only 25% of the power needed for the initial brake release. This results in very fast brake stopping. The DC voltage of the brake coil is determined based upon using a full-wave rectifier. The output voltage is 90% of the input voltage. ($V_{DC} = 0.90 \times V_{AC}$).

NORD offers additional fast-acting rectifiers besides the PMG 500. For additional details please reference User Manual U35100 – Fast Acting Brake Rectifiers.

NOTICE

In order to prevent rapid wear, the PMG 500 rectifier is required when utilizing the larger 800 Nm (590 lb-ft) and 1200 Nm (885 lb-ft) twin-rotor brakes. The PMG 500 rectifier is wired to "overexcite" the brake during its initial release.

Brake Switching Options

The rectifiers discussed in this manual can be wired to allow brake switching at either the AC power source (input) or the DC power source (output).

- AC switching allows the brake rectifier to be powered directly from the motor's terminal block with no additional wiring. However, this provides a slower brake stopping time due to the additional time needed to de-energize or collapse the motor's magnetic field.
- DC switching directly interrupts the current flow in the DC circuit of the brake rectifier. This method of brake switching guarantees faster brake stopping or brake engagement times.

⚠ WARNING

When the moving system undergoes a change in height (such as in a lift or incline conveyor application) or if the system tends to speed up or overhaul during normal operation, then DC-switching of the brake is required in order to prevent excessive load movement, drift or falling loads during stopping.

Figure 2.1: GVE/GHE Dimensions

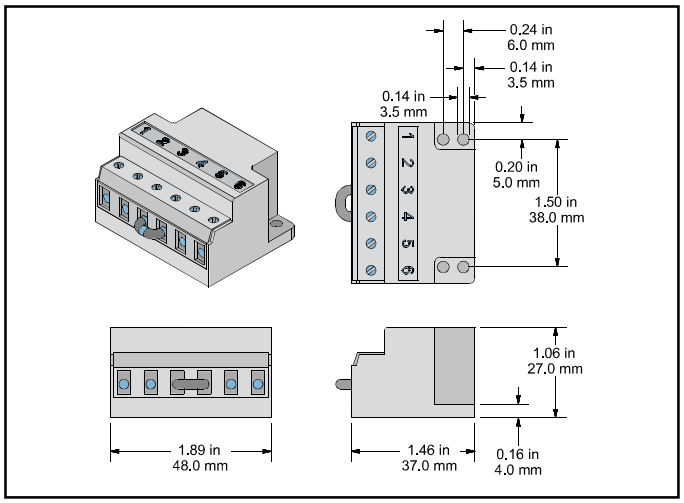

Figure 3.1: GUE Dimensions

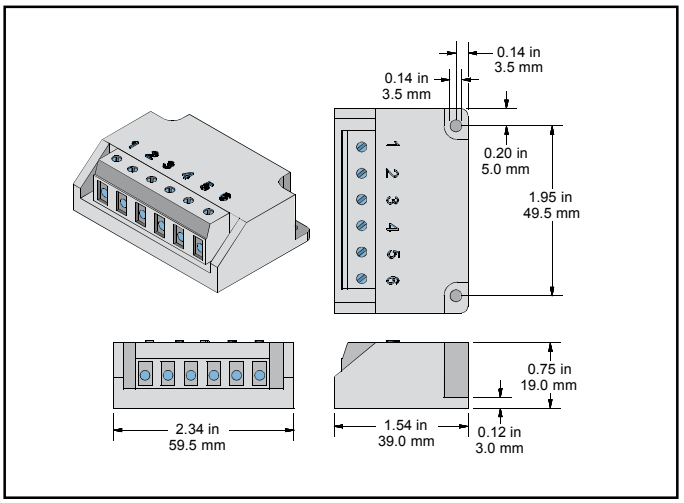

Figure 2.2: GVE/GHE Braking Methods

STANDARD STOPPING AC-SWITCHING

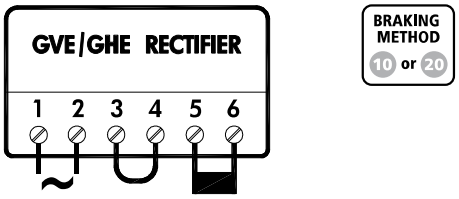

1 & 2	3 & 4	5 & 6
AC BRAKE VOLTAGE	JUMPER	DC BRAKE

FAST STOPPING DC-SWITCHING

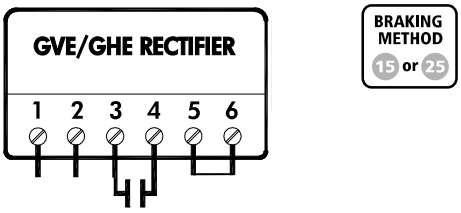

1 & 2	3 & 4	5 & 6
AC BRAKE VOLTAGE	NORMALLY OPEN CONTACT	DC BRAKE

* The normally open contact/s (NO) is not supplied by NORD it must close at the same time power is supplied to the brake. The contact must be capable of switching inductive loads and/or be rated at IEC AC3.

Braking Method	Break Release (Start)	Brake Engage (Stop)	Power Source
10	Standard	Standard (AC-Switching)	Motor terminals
15	Standard	Fast (DC-switching)	Motor terminals
20	Standard	Standard (AC-Switching)	Separate power
25	Standard	Fast (DC-switching)	Separate power

Figure 3.2: GVE/GHE Braking Methods

STANDARD STOPPING AC-SWITCHING

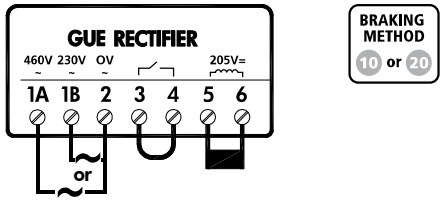

1B & 2	3 & 4	5 & 6
AC BRAKE VOLTAGE	JUMPER	DC BRAKE

FAST STOPPING DC-SWITCHING

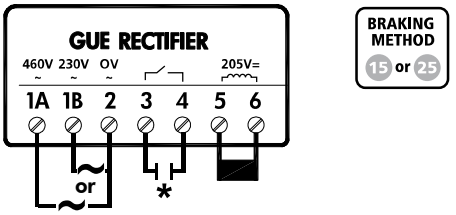

1 & 2	3 & 4	5 & 6
AC BRAKE VOLTAGE	NORMALLY OPEN CONTACT	DC BRAKE

* The normally open contact/s (NO) is not supplied by NORD it must close at the same time power is supplied to the brake. The contact must be capable of switching inductive loads and/or be rated at IEC AC3.

Braking Method	Break Release (Start)	Brake Engage (Stop)	Power Source
10	Standard	Standard (AC-Switching)	Motor terminals
15	Standard	Fast (DC-switching)	Motor terminals
20	Standard	Standard (AC-Switching)	Separate power
25	Standard	Fast (DC-switching)	Separate power

Figure 4.1: PMG 500 Dimensions

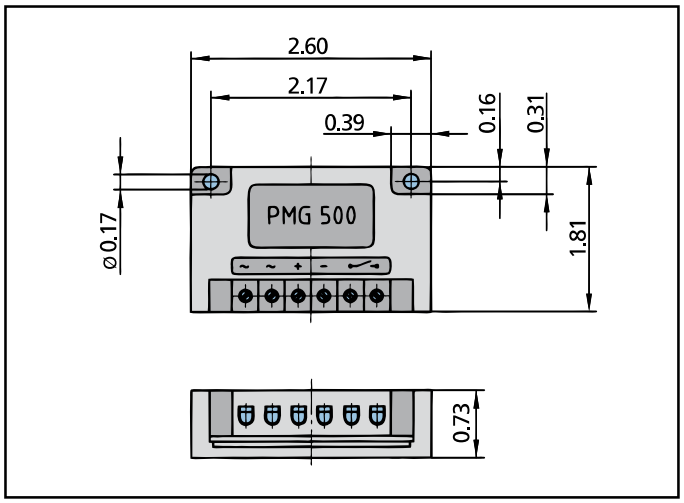

PMG 500 Push-Hybrid Rectifier

The PMG 500 rectifier provides an initial "push" the form of a timed full-wave brake-release function, which is then followed by a continuous half-wave brake-holding function.

- In order to prevent rapid wear, the PMG 500 rectifier is required when utilizing the larger 800 Nm (590 lb-ft) - and 1200 Nm (885 lb-ft) twin-rotor brakes.
- The PMG 500 rectifier is wired to "overexcite" the brake during its initial release. The DC voltage of the brake coil is determined based upon using a half-wave rectifier.

In some applications the PMG rectifier may be used for "Reduced Power Holding" or very fast brake engagement (See user manual U35100 for details).

IMPORTANT NOTE

If the motor is connected to an AC drive, soft start, or is a two-speed motor, the AC power must be supplied to the brake rectifier seperately from the motor power.

Figure 4.2: PMG 500 Braking Methods

STANDARD STOPPING (AC-SWITCHING)

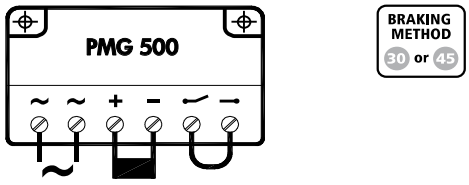

~ & ~	+ & -	⊷ & ⊸
AC BRAKE VOLTAGE	DC BRAKE	JUMPER

FAST & VERY FAST STOPPING (DC-SWITCHING)

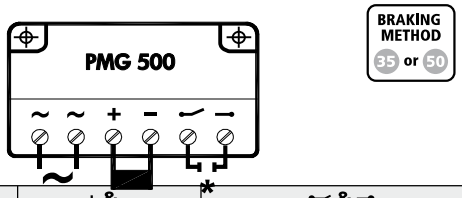

~ & ~	+ & -	⊷ & ⊸
AC BRAKE VOLTAGE	DC BRAKE	NORMALLY OPEN CONTACT

* The normally open contact/s (NO) is not supplied by NORD it must close at the same time power is supplied to the brake. The contact must be capable of switching inductive loads and/or be rated at IEC AC3.

Braking Method	Break Release (Start)	Brake Engage (Stop)	Power Source
30	Fast (Overecitation)	Standard (AC Switching)	Motor terminals
35	Fast (Overecitation)	Fast (DC Switching)	Motor terminals
45	Fast (Overecitation)	Standard (AC Switching)	Seperate power
50	Fast (Overecitation)	Fast (DC Switching)	Seperate power

Typical Connection Diagrams

BR101A — POWERED FROM MOTOR TERMINAL BLOCK — STANDARD RELEASE — NORMAL STOPPING (AC-SWITCHING) — 10

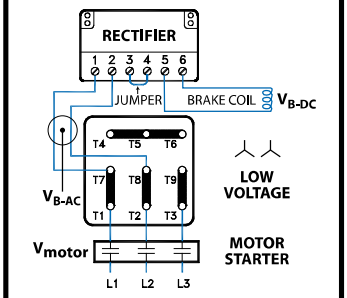

MOTOR	RECTIFIER	V_{motor}	V_{B-AC}	V_{B-DC}
208-230YY/460Y	GVE20	208 VAC	230 VAC	205 VDC
230YY/460Y	GVE20	230 VAC	230 VAC	205 VDC
230YY/460Y	GHE40	230 VAC	230 VAC	105 VDC

BR101B — POWERED FROM MOTOR TERMINAL BLOCK — STANDARD RELEASE — NORMAL STOPPING (AC-SWITCHING) — 10

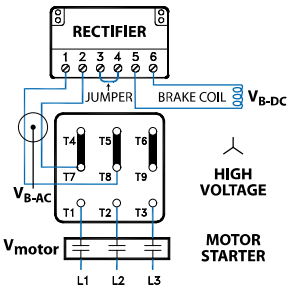

MOTOR	RECTIFIER	V_{motor}	V_{B-AC}	V_{B-DC}
230YY/460Y	GVE20	460 VAC	230 VAC	205 VDC
230YY/460Y	GHE40	460 VAC	230 VAC	105 VDC

BR101C — POWERED FROM MOTOR TERMINAL BLOCK — STANDARD RELEASE — NORMAL STOPPING (AC-SWITCHING) — 10

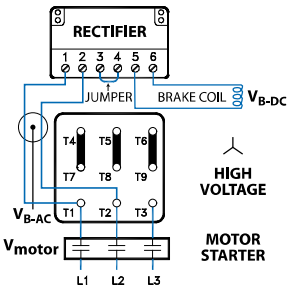

MOTOR	RECTIFIER	V_{motor}	V_{B-AC}	V_{B-DC}
230YY/460Y	GHE40	460 VAC	460 VAC	205 VDC

BR601A — POWERED FROM MOTOR TERMINAL BLOCK — STANDARD RELEASE — NORMAL STOPPING (AC-SWITCHING) — 10

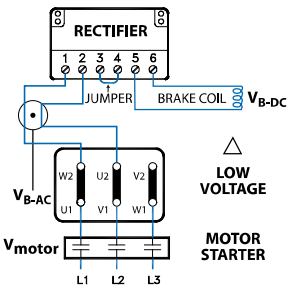

MOTOR	RECTIFIER	V_{motor}	V_{B-AC}	V_{B-DC}
208Δ/360Y	GVE20	208 VAC	208 VAC	180 VDC
230Δ/400Y	GVE20	230 VAC	230 VAC	205 VDC
400Δ/690Y	GHE40	400 VAC	400 VAC	180 VDC
460Δ/Y	GHE40	460 VAC	460 VAC	205 VDC

BR601B — POWERED FROM MOTOR TERMINAL BLOCK — STANDARD RELEASE — NORMAL STOPPING (AC-SWITCHING) — 10

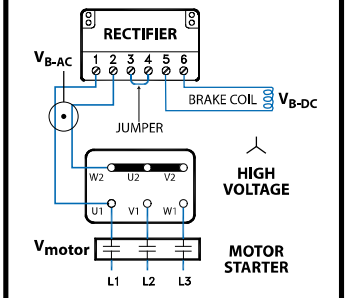

MOTOR	RECTIFIER	V_{motor}	V_{B-AC}	V_{B-DC}
230Δ/400Y	GVE20	400 VAC	230 VAC	205 VDC

BR601C — POWERED FROM MOTOR TERMINAL BLOCK — STANDARD RELEASE — NORMAL STOPPING (AC-SWITCHING) — 10

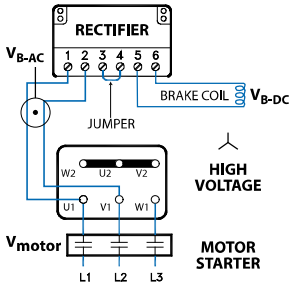

MOTOR	RECTIFIER	V_{motor}	V_{B-AC}	V_{B-DC}
230Δ/400Y	GHE40	400 VAC	400 VAC	180 VDC
332Δ/575Y	GHE50	575 VAC	575 VAC	250 VDC

BR603A — POWERED FROM MOTOR TERMINAL BLOCK — STANDARD RELEASE — FAST STOPPING (DC-SWITCHING) — 15

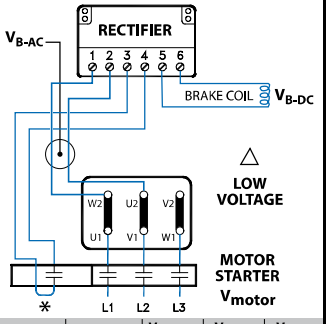

MOTOR	RECTIFIER	V_{motor}	V_{B-AC}	V_{B-DC}
208Δ/360Y	GVE20	208 VAC	208 VAC	180 VDC
230Δ/400Y	GVE20	230 VAC	230 VAC	205 VDC
400Δ/690Y	GHE40	400 VAC	400 VAC	180 VDC
460Δ/Y	GHE40	460 VAC	460 VAC	205 VDC

BR603B — POWERED FROM MOTOR TERMINAL BLOCK — STANDARD RELEASE — FAST STOPPING (DC-SWITCHING) — 15

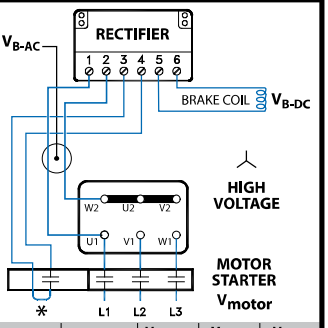

MOTOR	RECTIFIER	V_{motor}	V_{B-AC}	V_{B-DC}
230Δ/400Y	GVE20	400 VAC	230 VAC	205 VDC

BR603C — POWERED FROM MOTOR TERMINAL BLOCK — STANDARD RELEASE — FAST STOPPING (DC-SWITCHING) — 15

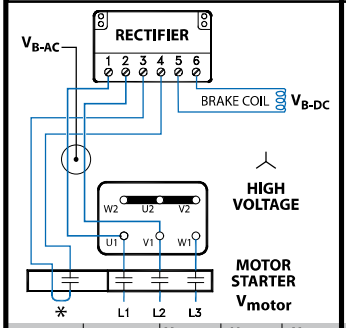

MOTOR	RECTIFIER	V_{motor}	V_{B-AC}	V_{B-DC}
230Δ/400Y	GHE40	400 VAC	400 VAC	180 VDC
332Δ/575Y	GHE50	575 VAC	575 VAC	250 VDC

BR103A — POWERED FROM MOTOR TERMINAL BLOCK — STANDARD RELEASE — FAST STOPPING (DC-SWITCHING) — 15

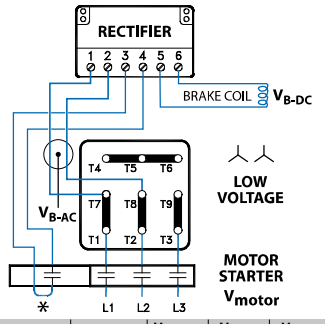

MOTOR	RECTIFIER	V_{motor}	V_{B-AC}	V_{B-DC}
208-230YY/460Y	GVE20	208 VAC	230 VAC	205 VDC
230YY/460Y	GVE20	230 VAC	230 VAC	205 VDC
230YY/460Y	GHE40	230 VAC	230 VAC	105 VDC

BR103B — POWERED FROM MOTOR TERMINAL BLOCK — STANDARD RELEASE — FAST STOPPING (DC-SWITCHING) — 15

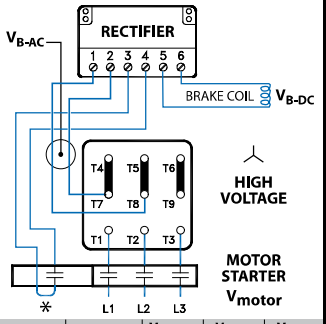

MOTOR	RECTIFIER	V_{motor}	V_{B-AC}	V_{B-DC}
230YY/460Y	GVE20	460 VAC	230 VAC	205 VDC

BR103C — POWERED FROM MOTOR TERMINAL BLOCK — STANDARD RELEASE — FAST STOPPING (DC-SWITCHING) — 15

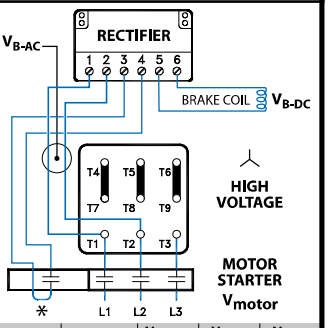

MOTOR	RECTIFIER	V_{motor}	V_{B-AC}	V_{B-DC}
230YY/460Y	GHE40	460 VAC	460 VAC	205 VDC

* The normally open contact/s (NO) is not supplied by NORD. It must close at the same time power is supplied to the brake. The contact must be capable of switching inductive loads and/or be rated IEC AC3.

= Braking Method

MOTOR BRAKES INSTALLATION & MAINTENANCE

Typical Connection Diagrams

BR102A — 20 — SEPERATE POWER SOURCE / STANDARD RELEASE / NORMAL STOPPING (AC-SWITCHING)

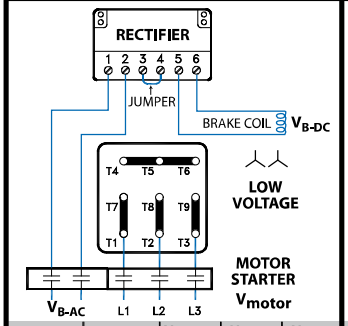

MOTOR	RECTIFIER	V_{motor}	V_{B-AC}	V_{B-DC}
208-230YY/460Y	GVE20	208 VAC	230 VAC	205 VDC
230YY/460Y	GVE20	230 VAC	115 VAC	105 VDC
230YY/460Y	GVE20	230 VAC	230 VAC	205 VDC
230YY/460Y	GHE40	230 VAC	230 VAC	105 VDC

BR102B — 20 — SEPERATE POWER SOURCE / STANDARD RELEASE / NORMAL STOPPING (AC-SWITCHING)

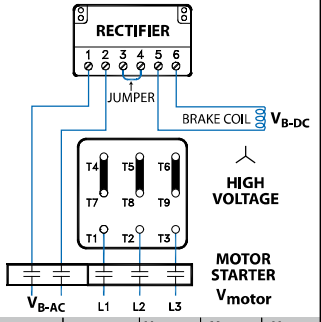

MOTOR	RECTIFIER	V_{motor}	V_{B-AC}	V_{B-DC}
230YY/460Y	GVE20	460 VAC	115 VAC	105 VDC
230YY/460Y	GVE20	460 VAC	230 VAC	205 VDC
230YY/460Y	GHE40	460 VAC	460 VAC	205 VDC

BR602A — 20 — SEPERATE POWER SOURCE / STANDARD RELEASE / NORMAL STOPPING (AC-SWITCHING)

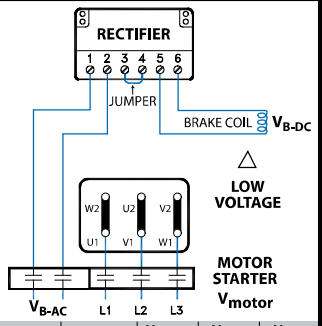

MOTOR	RECTIFIER	V_{motor}	V_{B-AC}	V_{B-DC}
208Δ/360Y	GVE20	208 VAC	208 VAC	180 VDC
230Δ/400Y	GVE20	230 VAC	230 VAC	205 VDC
400Δ/690Y	GHE40	400 VAC	400 VAC	180 VDC
460Δ/Y	GHE40	460 VAC	460 VAC	205 VDC

BR602B — 20 — SEPERATE POWER SOURCE / STANDARD RELEASE / NORMAL STOPPING (AC-SWITCHING)

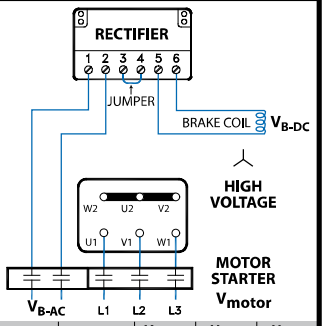

MOTOR	RECTIFIER	V_{motor}	V_{B-AC}	V_{B-DC}
230Δ/400Y	GHE40	400VAC	230 VAC	105 VDC
230Δ/400Y	GHE20	400VAC	230 VAC	205VDC
230Δ/400Y	GHE40	400 VAC	400 VAC	180 VDC
332Δ/575Y	GHE50	575 VAC	575 VAC	250 VDC

BR104A — 25 — SEPERATE POWER SOURCE / STANDARD RELEASE / FAST STOPPING (DC-SWITCHING)

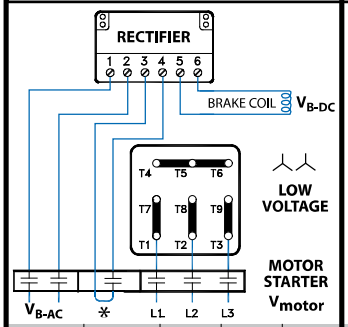

MOTOR	RECTIFIER	V_{motor}	V_{B-AC}	V_{B-DC}
208-230YY/460Y	GVE20	208 VAC	230 VAC	205 VDC
230YY/460Y	GVE20	230 VAC	115 VAC	105 VDC
230YY/460Y	GVE20	230 VAC	230 VAC	205 VDC
230YY/460Y	GHE40	230 VAC	230 VAC	105 VDC

BR104B — 25 — SEPERATE POWER SOURCE / STANDARD RELEASE / FAST STOPPING (DC-SWITCHING)

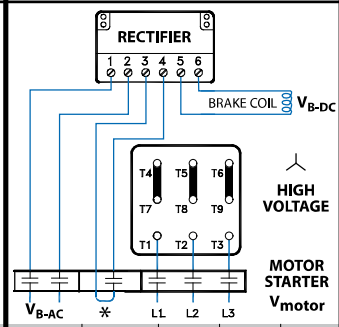

MOTOR	RECTIFIER	V_{motor}	V_{B-AC}	V_{B-DC}
230YY/460Y	GVE20	460 VAC	115 VAC	105 VDC
230YY/460Y	GVE20	460 VAC	230 VAC	205 VDC
230YY/460Y	GHE40	460 VAC	460 VAC	205 VDC

BR604A — 25 — SEPERATE POWER SOURCE / STANDARD RELEASE / FAST STOPPING (DC-SWITCHING)

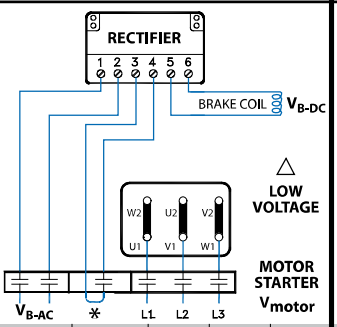

MOTOR	RECTIFIER	V_{motor}	V_{B-AC}	V_{B-DC}
208Δ/360Y	GHE20	208 VAC	208 VAC	105 VDC
230Δ/400Y	GHE20	230 VAC	230 VAC	105 VDC
400Δ/690Y	GHE40	400 VAC	400 VAC	180 VDC
460Δ/Y	GHE40	460 VAC	460 VAC	205 VDC

BR604B — 25 — SEPERATE POWER SOURCE / STANDARD RELEASE / FAST STOPPING (DC-SWITCHING)

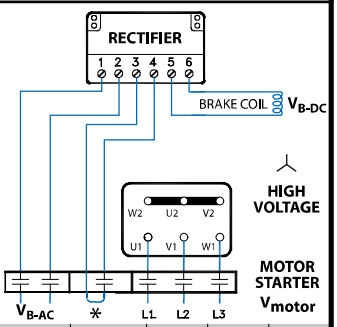

MOTOR	RECTIFIER	V_{motor}	V_{B-AC}	V_{B-DC}
230Δ/400Y	GHE40	400VAC	230 VAC	105 VDC
230Δ/400Y	GHE20	400VAC	230 VAC	205VDC
230Δ/400Y	GHE40	400 VAC	400 VAC	180 VDC
332Δ/575Y	GHE50	575 VAC	575 VAC	250 VDC

✻ The normally open contact/s (NO) is not supplied by NORD. It must close at the same time power is supplied to the brake. The contact must be capable of switching inductive loads and/or be rated IEC AC3.

= Braking Method

MOTOR BRAKES INSTALLATION & MAINTENANCE

Typical Connection Diagrams

GU101A — POWERED FROM MOTOR TERMINAL BLOCK — STANDARD RELEASE — STANDARD STOPPING (AC-SWITCHING) — 10

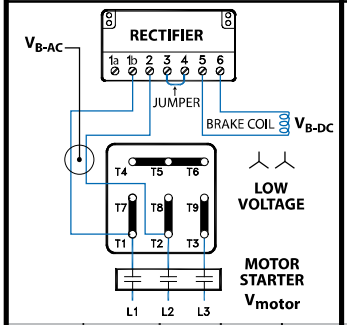

MOTOR	RECTIFIER	V_{motor}	V_{B-AC}	V_{B-DC}
208-230YY/460Y	GUE40V	208 VAC	208-230 VAC	205 VDC
230YY/460Y	GUE40V	230 VAC	230 VAC	205 VDC

GU101B — POWERED FROM MOTOR TERMINAL BLOCK — STANDARD RELEASE — STANDARD STOPPING (AC-SWITCHING) — 10

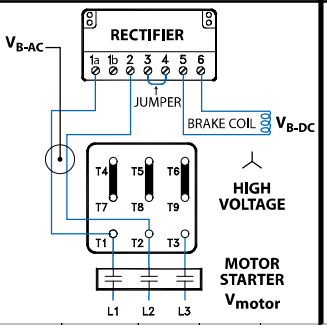

MOTOR	RECTIFIER	V_{motor}	V_{B-AC}	V_{B-DC}
208-230YY/460Y	GUE40V	460 VAC	460 VAC	205 VDC
230YY/460Y	GUE40V	460 VAC	460 VAC	205 VDC

GU101D — POWERED FROM MOTOR TERMINAL BLOCK — STANDARD RELEASE — STANDARD STOPPING (AC-SWITCHING) — 10

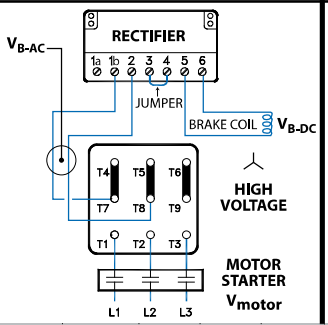

MOTOR	RECTIFIER	V_{motor}	V_{B-AC}	V_{B-DC}
230YY/460Y	GUE40V	460 VAC	230 VAC	205 VDC

GU101E — POWERED FROM MOTOR TERMINAL BLOCK — STANDARD RELEASE — NORMAL STOPPING (AC-SWITCHING) — 10

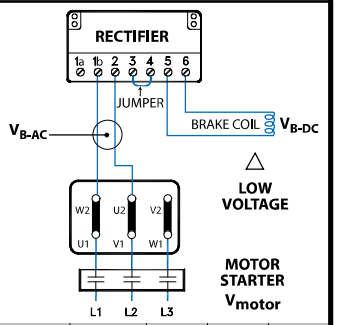

MOTOR	RECTIFIER	V_{motor}	V_{B-AC}	V_{B-DC}
230Δ/400Y	GUE40V	230 VAC	230 VAC	205 VDC

GU101F — POWERED FROM MOTOR TERMINAL BLOCK — STANDARD RELEASE — NORMAL STOPPING (AC-SWITCHING) — 10

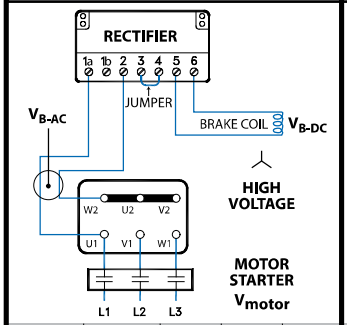

MOTOR	RECTIFIER	V_{motor}	V_{B-AC}	V_{B-DC}
230Δ/400Y	GUE40V	400 VAC	400 VAC	180 VDC

GU103A — POWERED FROM MOTOR TERMINAL BLOCK — STANDARD RELEASE — FAST STOPPING (DC-SWITCHING) — 15

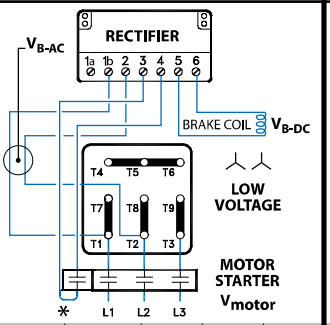

MOTOR	RECTIFIER	V_{motor}	V_{B-AC}	V_{B-DC}
208-230YY/460Y	GUE40V	208 VAC	208-230 VAC	205 VDC
230YY/460Y	GUE40V	230 VAC	230 VAC	205 VDC

GU103B — POWERED FROM MOTOR TERMINAL BLOCK — STANDARD RELEASE — FAST STOPPING (DC-SWITCHING) — 15

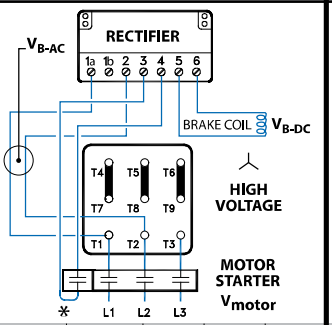

MOTOR	RECTIFIER	V_{motor}	V_{B-AC}	V_{B-DC}
208-230YY/460Y	GUE40V	460 VAC	460 VAC	205 VDC
230YY/460Y	GUE40V	460 VAC	460 VAC	205 VDC

GU103D — POWERED FROM MOTOR TERMINAL BLOCK — STANDARD RELEASE — FAST STOPPING (DC-SWITCHING) — 15

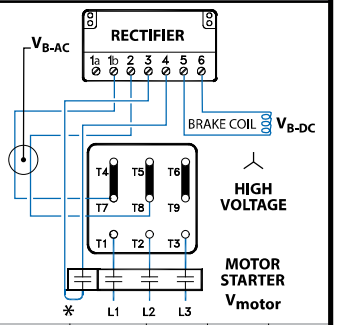

MOTOR	RECTIFIER	V_{motor}	V_{B-AC}	V_{B-DC}
230YY/460Y	GUE40V	460 VAC	230 VAC	205 VDC

GU103E — POWERED FROM MOTOR TERMINAL BLOCK — STANDARD RELEASE — FAST STOPPING (DC-SWITCHING) — 15

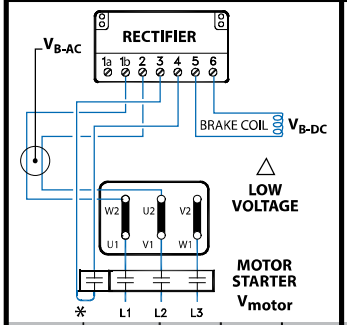

MOTOR	RECTIFIER	V_{motor}	V_{B-AC}	V_{B-DC}
230Δ/400Y	GUE40V	230 VAC	230 VAC	205 VDC

GU103F — POWERED FROM MOTOR TERMINAL BLOCK — STANDARD RELEASE — FAST STOPPING (DC-SWITCHING) — 15

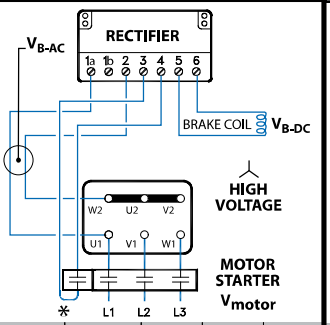

MOTOR	RECTIFIER	V_{motor}	V_{B-AC}	V_{B-DC}
230Δ/400Y	GUE40V	400 VAC	400 VAC	180 VDC

GU102A — SEPERATE POWER SOURCE — STANDARD RELEASE — STANDARD STOPPING (AC-SWITCHING) — 20

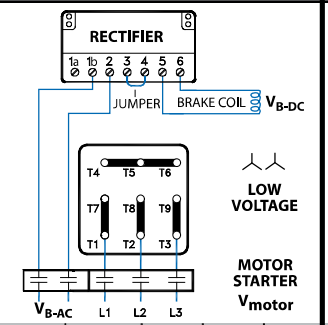

MOTOR	RECTIFIER	V_{motor}	V_{B-AC}	V_{B-DC}
208-230YY/460Y	GUE40V	208 VAC	208-230 VAC	205 VDC
230YY/460Y	GUE40V	230 VAC	230 VAC	205 VDC
208-230YY/460Y	GUE40V	208 VAC	115 VAC	105 VDC
230YY/460Y	GUE40V	230 VAC	115 VAC	105 VDC

GU102B — SEPERATE POWER SOURCE — STANDARD RELEASE — STANDARD STOPPING (AC-SWITCHING) — 20

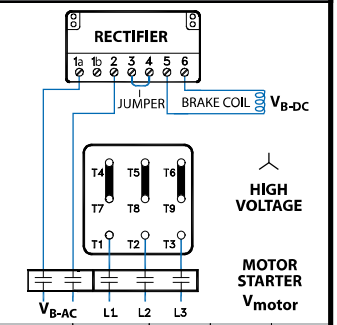

MOTOR	RECTIFIER	V_{motor}	V_{B-AC}	V_{B-DC}
208-230YY/460Y	GUE40V	460 VAC	460 VAC	205 VDC
230YY/460Y	GUE40V	460 VAC	460 VAC	205 VDC

✱ The normally open contact/s (NO) is not supplied by NORD. It must close at the same time power is supplied to the brake. The contact must be capable of switching inductive loads and/or be rated IEC AC3.

= Braking Method

Typical Connection Diagrams

GU102E — 20

SEPERATE POWER SOURCE
STANDARD RELEASE
STANDARD STOPPING (AC-SWITCHING)

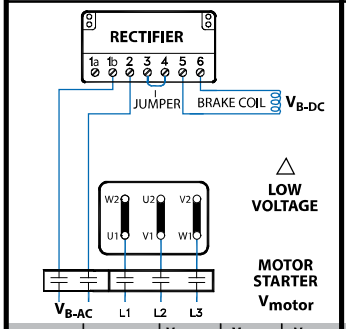

MOTOR	RECTIFIER	V_{motor}	V_{B-AC}	V_{B-DC}
230Δ/400Y	GUE40V	230 VAC	230 VAC	205 VDC

GU102F — 20

SEPERATE POWER SOURCE
STANDARD RELEASE
STANDARD STOPPING (AC-SWITCHING)

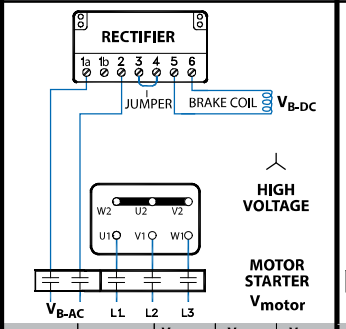

MOTOR	RECTIFIER	V_{motor}	V_{B-AC}	V_{B-DC}
230Δ/400Y	GUE40V	400 VAC	400 VAC	180 VDC

GU104A — 25

SEPERATE POWER SOURCE
STANDARD RELEASE
FAST STOPPING (DC-SWITCHING)

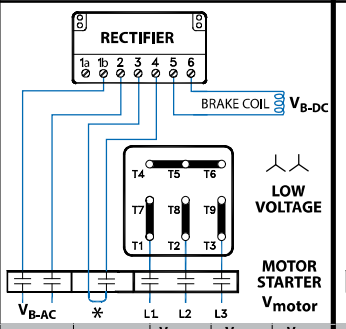

MOTOR	RECTIFIER	V_{motor}	V_{B-AC}	V_{B-DC}
208-230YY/460Y	GUE40V	208 VAC	208-230 VAC	205 VDC
230YY/460Y	GUE40V	230 VAC	230 VAC	205 VDC
208-230Y/460Y	GUE40V	208 VAC	115 VAC	105 VDC
230YY/460Y	GUE40V	230 VAC	115 VAC	105 VDC

GU104B — 25

SEPERATE POWER SOURCE
STANDARD RELEASE
FAST STOPPING (DC-SWITCHING)

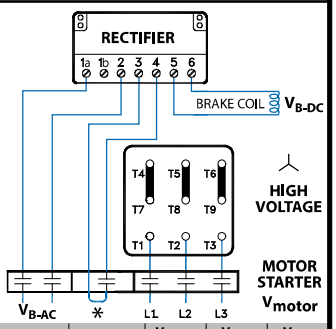

MOTOR	RECTIFIER	V_{motor}	V_{B-AC}	V_{B-DC}
208-230YY/460Y	GUE40V	460 VAC	460 VAC	205 VDC
230YY/460Y	GUE40V	460 VAC	460 VAC	205 VDC

GU104E — 25

SEPERATE POWER SOURCE
STANDARD RELEASE
FAST STOPPING (DC-SWITCHING)

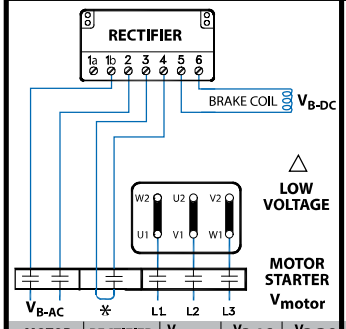

MOTOR	RECTIFIER	V_{motor}	V_{B-AC}	V_{B-DC}
230Δ/400Y	GUE40V	230 VAC	230 VAC	205 VDC

GU104F — 25

SEPERATE POWER SOURCE
STANDARD RELEASE
FAST STOPPING (DC-SWITCHING)

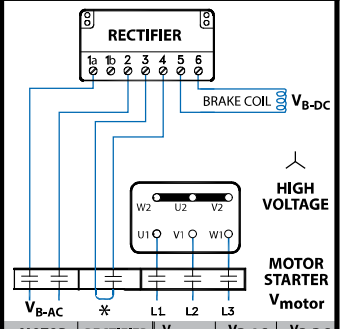

MOTOR	RECTIFIER	V_{motor}	V_{B-AC}	V_{B-DC}
230Δ/400Y	GUE40V	400 VAC	400 VAC	180 VDC

✻ The normally open contact/s (NO) is not supplied by NORD. It must close at the same time power is supplied to the brake. The contact must be capable of switching inductive loads and/or be rated IEC AC3.

= Braking Method

Typical Connection Diagrams

PMG101A — POWERED FROM MOTOR TERMINAL BLOCK 30
FAST-RELEASE (OVER EXCITATION)
NORMAL STOPPING (AC-SWITCHING)

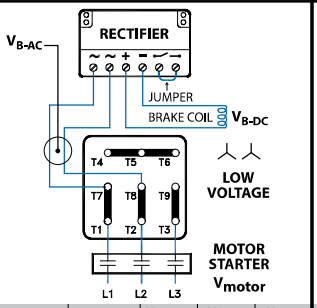

MOTOR	RECTIFIER	V_{motor}	V_{B-AC}	V_{B-DC}
230YY/460Y	PMG500	230 VAC	230 VAC	105 VDC

PMG101B — POWERED FROM MOTOR TERMINAL BLOCK 30
FAST-RELEASE (OVER EXCITATION)
NORMAL STOPPING (AC-SWITCHING)

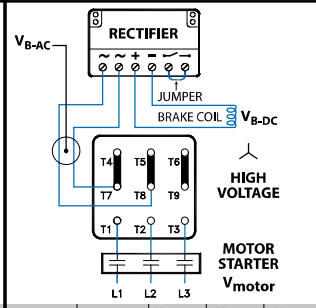

MOTOR	RECTIFIER	V_{motor}	V_{B-AC}	V_{B-DC}
230YY/460Y	PMG500	460 VAC	230 VAC	105 VDC

PMG101C — POWERED FROM MOTOR TERMINAL BLOCK 30
FAST-RELEASE (OVER EXCITATION)
NORMAL STOPPING (AC-SWITCHING)

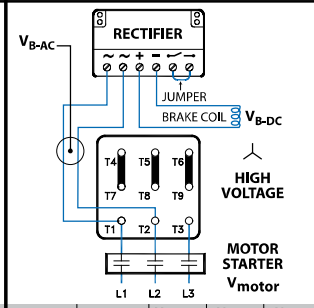

MOTOR	RECTIFIER	V_{motor}	V_{B-AC}	V_{B-DC}
230YY/460Y	PMG500	460 VAC	460 VAC	205 VDC

PMG101D — POWERED FROM MOTOR TERMINAL BLOCK 30
FAST-RELEASE (OVER EXCITATION)
NORMAL STOPPING (AC-SWITCHING)

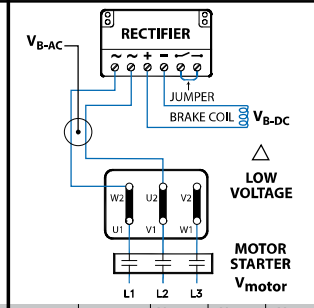

MOTOR	RECTIFIER	V_{motor}	V_{B-AC}	V_{B-DC}
208Δ/360Y	PMG500	208 VAC	208 VAC	105 VDC
230Δ/400Y	PMG500	230 VAC	230 VAC	105 VDC
400Δ/690Y	PMG500	400 VAC	400 VAC	180 VDC
460Δ/Y	PMG500	460 VAC	460 VAC	205 VDC

PMG101E — POWERED FROM MOTOR TERMINAL BLOCK 30
FAST-RELEASE (OVER EXCITATION)
NORMAL STOPPING (AC-SWITCHING)

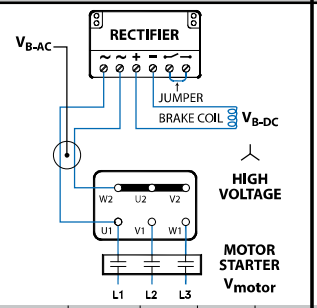

MOTOR	RECTIFIER	V_{motor}	V_{B-AC}	V_{B-DC}
230Δ/400Y	PMG500	400 VAC	230 VAC	105 VDC

PMG102A — POWERED FROM MOTOR TERMINAL BLOCK 35
FAST-RELEASE (OVER EXCITATION)
FAST STOPPING (DC-SWITCHING)

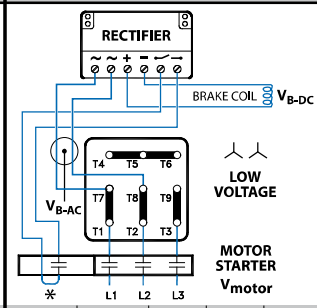

MOTOR	RECTIFIER	V_{motor}	V_{B-AC}	V_{B-DC}
230YY/460Y	PMG500	230 VAC	230 VAC	105 VDC

PMG102B — POWERED FROM MOTOR TERMINAL BLOCK 35
FAST-RELEASE (OVER EXCITATION)
FAST STOPPING (DC-SWITCHING)

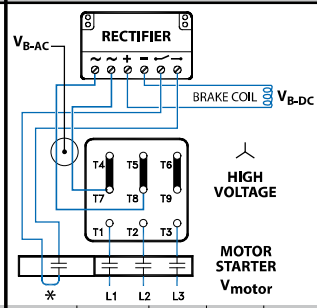

MOTOR	RECTIFIER	V_{motor}	V_{B-AC}	V_{B-DC}
230YY/460Y	PMG500	460 VAC	230 VAC	105 VDC

PMG102C — POWERED FROM MOTOR TERMINAL BLOCK 35
FAST-RELEASE (OVER EXCITATION)
FAST STOPPING (DC-SWITCHING)

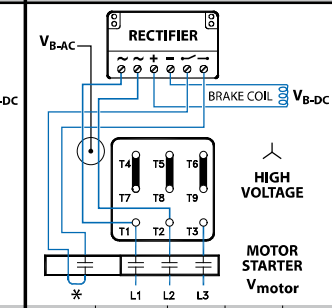

MOTOR	RECTIFIER	V_{motor}	V_{B-AC}	V_{B-DC}
230YY/460Y	PMG500	460 VAC	460 VAC	205 VDC

PMG102D — POWERED FROM MOTOR TERMINAL BLOCK 35
FAST-RELEASE (OVER EXCITATION)
FAST STOPPING (DC-SWITCHING)

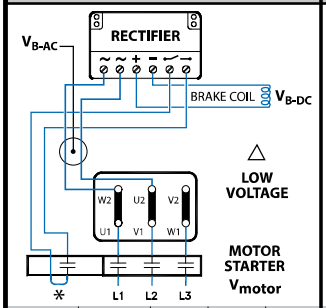

MOTOR	RECTIFIER	V_{motor}	V_{B-AC}	V_{B-DC}
208Δ/360Y	PMG500	208 VAC	208 VAC	105 VDC
230Δ/400Y	PMG500	230 VAC	230 VAC	105 VDC
400Δ/690Y	PMG500	400 VAC	400 VAC	180 VDC
460Δ/Y	PMG500	460 VAC	460 VAC	205 VDC

PMG102E — POWERED FROM MOTOR TERMINAL BLOCK 35
FAST-RELEASE (OVER EXCITATION)
FAST STOPPING (DC-SWITCHING)

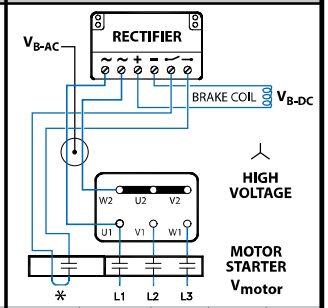

MOTOR	RECTIFIER	V_{motor}	V_{B-AC}	V_{B-DC}
230Δ/400Y	PMG500	400 VAC	230 VAC	105 VDC

✱ The normally open contact/s (NO) is not supplied by NORD. It must close at the same time power is supplied to the brake. The contact must be capable of switching inductive loads and/or be rated IEC AC3.

= Braking Method

Typical Connection Diagrams

PMG104A — 45 — SEPERATE POWER SOURCE, FAST-RELEASE (OVER EXCITATION), NORMAL STOPPING (AC-SWITCHING)

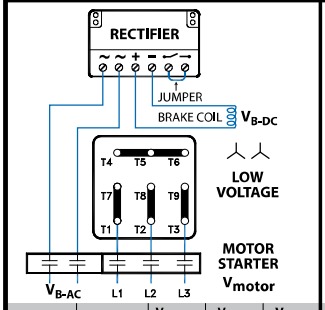

MOTOR	RECTIFIER	V_{motor}	V_{B-AC}	V_{B-DC}
230YY/460Y	PMG500	230 VAC	230 VAC	105 VDC

PMG104B — 45 — SEPERATE POWER SOURCE, FAST-RELEASE (OVER EXCITATION), NORMAL STOPPING (AC-SWITCHING)

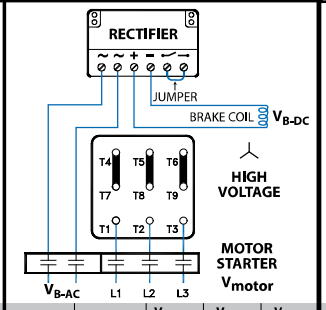

MOTOR	RECTIFIER	V_{motor}	V_{B-AC}	V_{B-DC}
230YY/460Y	PMG500	460 VAC	230 VAC	105 VDC

PMG104C — 45 — SEPERATE POWER SOURCE, FAST-RELEASE (OVER EXCITATION), NORMAL STOPPING (AC-SWITCHING)

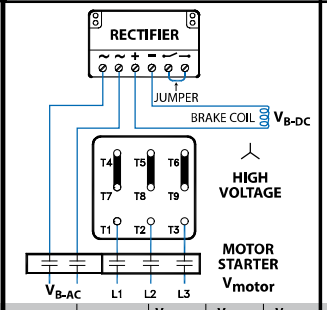

MOTOR	RECTIFIER	V_{motor}	V_{B-AC}	V_{B-DC}
230YY/460Y	PMG500	460 VAC	460 VAC	205 VDC

PMG104D — 45 — SEPERATE POWER SOURCE, FAST-RELEASE (OVER EXCITATION), NORMAL STOPPING (AC-SWITCHING)

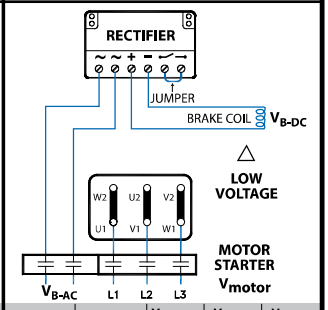

MOTOR	RECTIFIER	V_{motor}	V_{B-AC}	V_{B-DC}
208Δ/360Y	PMG500	208 VAC	208 VAC	105 VDC
230Δ/400Y	PMG500	230 VAC	230 VAC	105 VDC
400Δ/690Y	PMG500	400 VAC	400 VAC	180 VDC
460Δ/Y	PMG500	460 VAC	460 VAC	205 VDC

PMG104E — 45 — SEPERATE POWER SOURCE, FAST-RELEASE (OVER EXCITATION), NORMAL STOPPING (AC-SWITCHING)

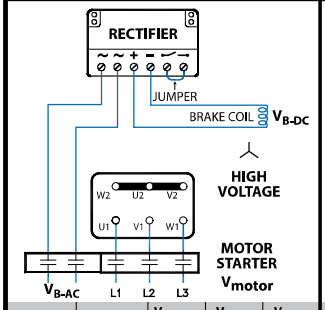

MOTOR	RECTIFIER	V_{motor}	V_{B-AC}	V_{B-DC}
230Δ/400Y	PMG500	400 VAC	230 VAC	105 VDC

PMG105A — 50 — SEPERATE POWER SOURCE, FAST-RELEASE (OVER EXCITATION), FAST STOPPING (DC-SWITCHING)

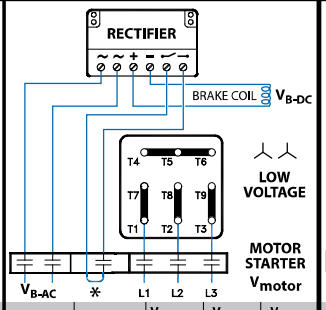

MOTOR	RECTIFIER	V_{motor}	V_{B-AC}	V_{B-DC}
230YY/460Y	PMG500	230 VAC	230 VAC	105 VDC

PMG105B — 50 — SEPERATE POWER SOURCE, FAST-RELEASE (OVER EXCITATION), FAST STOPPING (DC-SWITCHING)

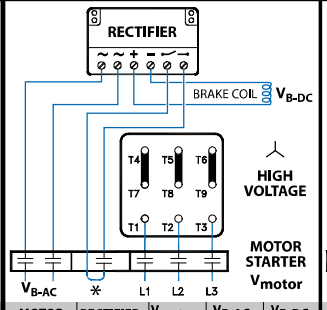

MOTOR	RECTIFIER	V_{motor}	V_{B-AC}	V_{B-DC}
230YY/460Y	PMG500	460 VAC	230 VAC	105 VDC

PMG105C — 50 — SEPERATE POWER SOURCE, FAST-RELEASE (OVER EXCITATION), FAST STOPPING (DC-SWITCHING)

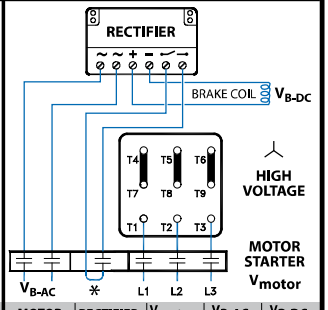

MOTOR	RECTIFIER	V_{motor}	V_{B-AC}	V_{B-DC}
230YY/460Y	PMG500	460 VAC	460 VAC	205 VDC

PMG105D — 50 — SEPERATE POWER SOURCE, FAST-RELEASE (OVER EXCITATION), FAST STOPPING (DC-SWITCHING)

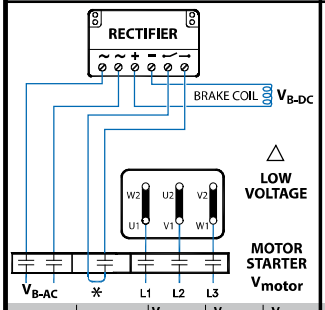

MOTOR	RECTIFIER	V_{motor}	V_{B-AC}	V_{B-DC}
208Δ/360Y	PMG500	208 VAC	208 VAC	105 VDC
230Δ/400Y	PMG500	230 VAC	230 VAC	105 VDC
400Δ/690Y	PMG500	400 VAC	400 VAC	180 VDC
460Δ/Y	PMG500	460 VAC	460 VAC	205 VDC

PMG105E — 50 — SEPERATE POWER SOURCE, FAST-RELEASE (OVER EXCITATION), FAST STOPPING (DC-SWITCHING)

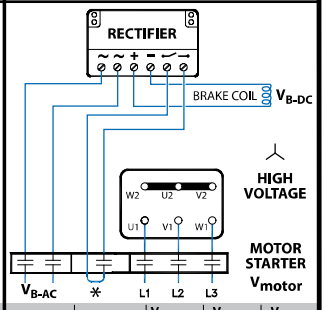

MOTOR	RECTIFIER	V_{motor}	V_{B-AC}	V_{B-DC}
230Δ/400Y	PMG500	400 VAC	230 VAC	105 VDC

* The normally open contact/s (NO) is not supplied by NORD. It must close at the same time power is supplied to the brake. The contact must be capable of switching inductive loads and/or be rated IEC AC3.

= Braking Method

Typical Connection Diagrams - Single Phase Motors

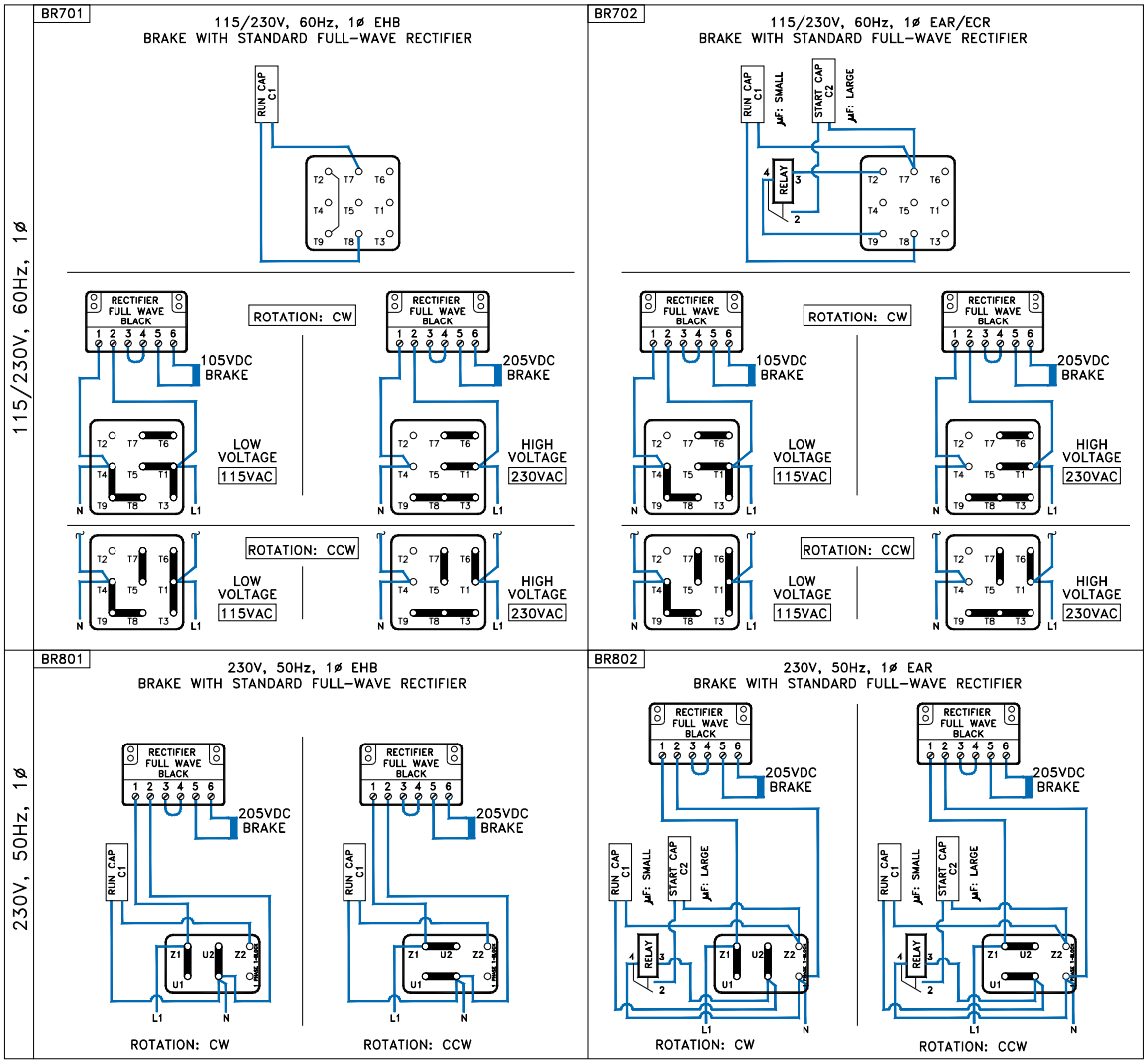

Troubleshooting Information

Troubleshooting	Cause	Remedy
Brake doesn't release	Air gap too large	Check air gap and adjust
	Brake not recieving electrical power	Check electrical connection
	Failed rectifier	Replace rectifier
	Brake is getting too warm	Use fast response (FR) rectifier
	Voltage to brake coil too small	Check connection voltageof brake coil
	Rectifier supply voltage from inverter	Rectifier voltage must be from seperate source. (Inverter output voltage varies)
Brake release is delayed	Air gap too large	Check air gap and adjust
	Voltage to brake coil too small	Check connection voltage of brake coil
Brake does not engage	Voltage to coil too large	Check connection voltages of brake windings
	Hand release is adjusted incorrectly	Adjust to correct air gap
	Anchor plate mechanically blocked	Remove mechanical blockage
Brake engagement is delayed	Voltage to coil too large	Check connection voltage of brake windings
	Brake is switched to AC side	Use DC switching

FAST ACTING BRAKE RECTIFIERS (GPE, GPU & PMG)

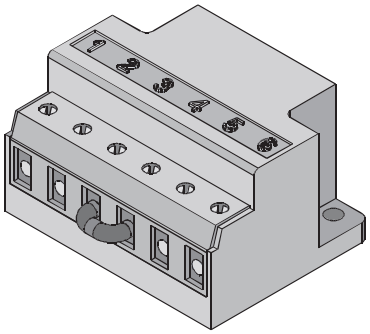

General Instructions

This manual provides general operating instructions for the "Fast Acting Brake Rectifiers type "GPE, GPU, and PMG" that are commonly offered by NORD in addition to the standard brake control rectifiers. Please feel free to contact NORD with any questions concerning the supplied brake rectifiers and brake components.

Safety Notice

Only qualified personnel should attempt installation, operation and maintenance of NORD brakes and brake rectifiers. If you have a question about a procedure or are uncertain about any detail, seek clarification and DO NOT PROCEED.

⚠ DANGER

- This equipment contains high electrical voltage. Remove and lockout all power from the electric motor and brake before any work is completed on the brake.
- The user is responsible for conforming to all national and local electrical and safety codes. Wiring practices, proper grounding, disconnects, and over current protection, are of particular importance.
- Make certain the load is supported when servicing the brake. Removing power from the brake or removing the brake from the motor will release the load, which may cause severe injury or death.
- Failure to follow proper procedures and precautions may result in severe bodily injury or death.

Brake Control Rectifiers

NORD brake control rectifiers convert AC voltage to DC voltage. Rectifiers are used because most applications require AC voltage to power the motor, but DC power is required to power the brake and DC power is not typically available. NORD brakemotors typically include the rectifier located inside the terminal box.

Rectifier Advantages

- Individual power source for each brake.
- Compact size, mounted inside the terminal box.
- Multiple types, voltage options and release/engagement modes available.
- Mountable in a separate control cabinet.
- Integral protection against voltage spikes.

Standard Rectifier Types

Full-Wave Rectifier

A rectifier in which both the positive and negative half-cycles of the AC input signal are rectified to produce a uni-directional DC current supply to the load or the brake. The output voltage is 90% of the input voltage ($V_{DC} = 0.90 \times V_{AC}$).

Half-Wave Rectifier

A rectifier in which only alternate half-cycles of the AC input signal are rectified to produce a uni-directional DC current supply to the load or the brake. The output voltage is 45% of the input voltage ($V_{DC} = 0.45 \times V_{AC}$).

Dual-Wave Rectifier

A rectifier that can be wired as either a full-wave rectifier or a half-wave rectifier depending upon how it is connected to the AC input signal.

IMPORTANT NOTE

This manual provides general operating instructions for NORD brakes with Fast-Acting brake Rectifiers. For additional brake and brake rectifier information please reference User Manual U35000.

Fast-Acting or Push-Hybrid Rectifiers [GPE, GPU & PMG]

A push-hybrid rectifier or fast-acting brake rectifier provides an initial "push" in the form of a timed full-wave brake-release function, which is then followed by a continuous half-wave brake-holding function. There are two ways to apply these rectifiers as follows:

- "Overexcitation" of the brake coil provides faster brake release or improved cycling capacity. The DC voltage of the brake coil is determined based upon using a half-wave rectifier. The output voltage is 45% of the input voltage ($V_{DC} = 0.45 \times V_{AC}$).
- "Reducer-Power Holding" of the brake coil maintains the brake in a released state by using only 25% of the power needed for the initial brake release. This results in very fast brake stopping. The DC voltage of the brake coil is determined based upon using a full-wave rectifier. The output voltage is 90% of the input voltage. ($V_{DC} = 0.90 \times V_{AC}$).

NOTICE

In order to prevent rapid wear, the PMG 500 rectifier is required when utilizing the larger 800 Nm (590 lb-ft) and 1200 Nm (885 lb-ft) twin-rotor brakes. The PMG500 rectifier is wired to "overexcite" the brake during its initial release.

Push-Hybrid Rectifiers External DC Switching (GPE)

Like the standard NORD brake control rectifiers, NORD's fast acting brake control rectifiers convert AC voltage to DC voltage. The "Fast Acting Brake Rectifiers"are utilized to improve brake performance and are often recommended in order to provide shorter brake release times or to provide faster stopping times.

The fast acting rectifiers are a two-stage "push" design. When power is first applied these rectifiers operate like a full-wave rectifier and then after a relatively short period of time they act like a half-wave rectifier. The GPE type rectifiers start out in full-wave mode when power is first applied and then after approximately 250 ms they switch to half-wave mode.

GPE rectifiers were designed for external control of the brake's DC-switching. GPE rectifiers are primarily used in across-the-line applications where the brake power is supplied by the motor terminals but they may also be used in situations where the brake power is supplied separately to the brake rectifier.

There are two ways to apply the fast acting rectifiers:

- The first method, known as "Overexcitation," provides fast brake release. The brake coil is selected like a half-wave system (45% of the AC supply voltage).
- The second method, known as "Reduced Power Holding," provides very fast brake stopping. The brake coil is selected like a full-wave system (90% of the AC supply voltage).

IMPORTANT NOTE

If the motor is connected to a frequency inverter, soft start, or is a two-speed motor, then seperate AC power must be supplied to the brake rectifier.

GPE Rectifier Dimensions

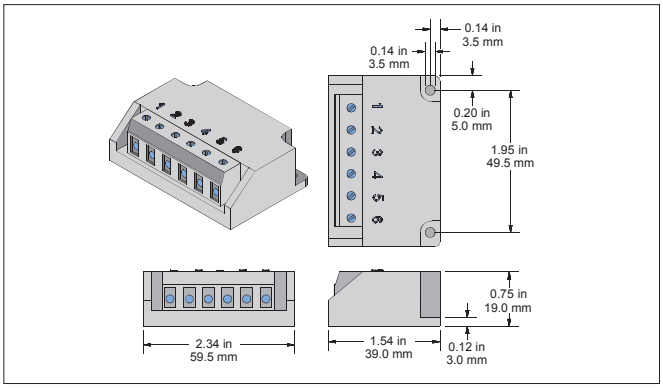

Ratings & Part Numbers

Model Type	GPE20L	GPE40L
Part Number	19140230	19140240
Protection (electronics)	Coated	Coated
Color	Black	
Input Voltage (V_{AC})	200V-275V	380V-480V
Output Voltage (V_{DC})	(V_{DC} =0.45 x V_{AC}) - As Half-Wave (V_{DC} =0.90 x V_{AC}) - As Full-Wave	
Rated Current @ 40°C	0.7 A	0.7A
Rated Current @ 75°C	0.5 A	0.5A
Temperature Range	-20°C to 75°C	
DC-Switching via	External Contact or IR Relay	

Braking Method

Braking Method	Break Release (Start)	Brake Engage (Stop)	Power Source
40	Standard	Very Fast (Reduced Power Holding)	Motor terminals
30	Fast (Overecitation)	Standard (AC Switching)	Motor terminals
35	Fast (Overecitation)	Fast (DC Switching)	Motor terminals

Basic Connection (AC & DC Switching)

The GPE brake system can be connected for standard stopping (AC-Switching), fast stopping (DC-Switching) and very fast stopping (Reduced power holding & DC-Switching). Fast brake release can also be achieved by selecting a different brake coil combination.

STANDARD STOPPING (AC-SWITCHING)

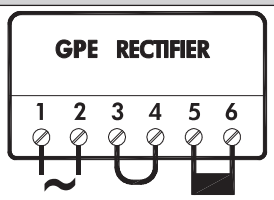

1 & 2	3 & 4	5 & 6
AC BRAKE VOLTAGE	JUMPER	DC BRAKE

FAST & VERY FAST STOPPING (DC-SWITCHING)

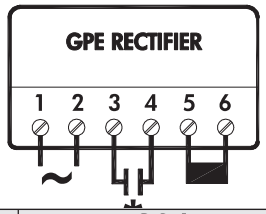

1 & 2	3 & 4	5 & 6
AC BRAKE VOLTAGE	NORMALLY OPEN CONTACT	DC BRAKE

* The normally open contact/s (NO) is not supplied by NORD it must close at the same time power is supplied to the brake. The contact must be capable of switching inductive loads and/or be rated at IEC AC3.

FAST ACTING BRAKE RECTIFIERS (GPE, GPU & PMG)

Push-Hybrid Rectifiers Integrated DC Switching (GPU)

Like the standard NORD brake control rectifiers, NORD's fast acting brake control rectifiers convert AC voltage to DC voltage. The "Fast Acting Brake Rectifiers"are utilized to improve brake performance and are often recommended in order to provide shorter brake release times or to provide faster stopping times.

The fast acting rectifiers are a two-stage "push" design. When power is first applied these rectifiers operate like a full-wave rectifier and then after a relatively short period of time they act like a half-wave rectifier. The GPU rectifiers start out in full-wave mode when power is first applied and then after approximately 250 ms they switch to half-wave mode.

GPU rectifiers were designed for integrated control of the brake's DC-switching and are voltage sensing. GPU rectifiers are primarily used in applications where there is a frequency inverter, soft start, or two-speed motor. Seperate AC power must be supplied to the brake rectifier.

There are two ways to apply the fast acting rectifiers:

- The first method, known as "Overexcitation," provides fast brake release. The brake coil is selected like a half-wave system (45% of the AC supply voltage).
- The second method, known as "Reduced Power Holding," provides very fast brake stopping. The brake coil is selected like a full-wave system (90% of the AC supply voltage).

IMPORTANT NOTE

The GPU rectifier may also be utilized for across-the-line applications; however it must always be powered separate from the motor and have its own pair of contactors or starters. It is unadvisable to use the motor terminal block to supply the GPU rectifier's AC power due to the motor's slow energy dissipation when switched off.

IMPORTANT NOTE

If the motor is connected to a frequency inverter, soft start, or is a two-speed motor, then seperate AC power must be supplied to the brake rectifier.

Braking Method

Braking Method	Break Release (Start)	Brake Engage (Stop)	Power Source
55	Standard	Very Fast (Reduced Power Holding)	Seperate power
45	Fast (Overecitation)	Standard (AC Switching)	Seperate power
50	Fast (Overecitation)	Fast (DC Switching)	Seperate power

GPU Rectifier Dimensions

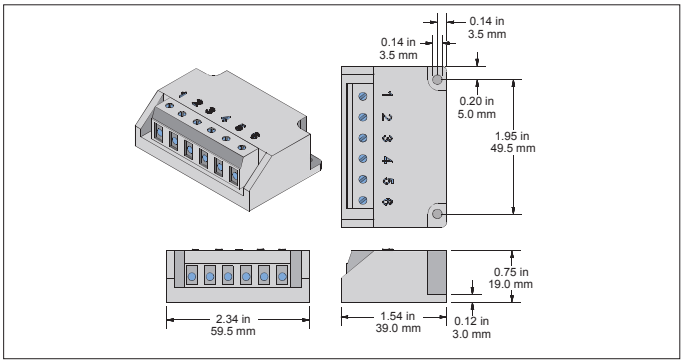

Ratings & Part Numbers

Model Type	GPU20L	GPU40L
Part Number	19140090	19140170
Protection (electronics)	Coated	Coated
Color	Black	
Input Voltage (V_{AC})	200V-275V	380V-480V
Output Voltage (V_{DC})	(V_{DC}=0.45 x V_{AC}) - As Half-Wave (V_{DC}=0.90 x V_{AC}) - As Full-Wave	
Rated Current @ 40°C	0.7A	0.7A
Rated Current @ 75°C	0.5A	0.5A
Temperature Range	-20°C to 75°C	
DC-Switching via	Internal Activation	

Basic Connection (AC & DC Switching)

The GPU brake system can be connected for standard stopping (AC-Switching), fast stopping (DC-Switching) and very fast stopping (Reduced power holding & DC-Switching). Fast brake release can also be achieved by selecting a different brake coil combination.

STANDARD STOPPING AC-SWITCHING

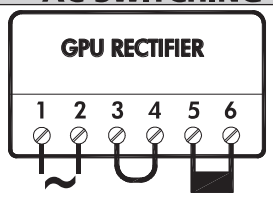

1 & 2	3 & 4	5 & 6
AC BRAKE VOLTAGE	JUMPER	DC BRAKE

FAST & VERY FAST STOPPING DC-SWITCHING

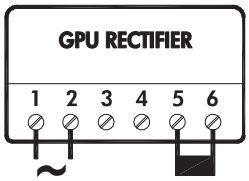

1 & 2	3 & 4	5 & 6
AC BRAKE VOLTAGE	-	DC BRAKE

Push-Hybrid Rectifiers External DC Switching (PMG)

Like the standard NORD brake control rectifiers, NORD's fast acting brake control rectifiers convert AC voltage to DC voltage. The "Fast Acting Brake Rectifiers"are utilized to improve brake performance and are often recommended in order to provide shorter brake release times or to provide faster stopping times.

The fast acting rectifiers are a two-stage "push" design. When power is first applied these rectifiers operate like a full-wave rectifier and then after a relatively short period of time they act like a half-wave rectifier. The PMG type rectifiers start out in full-wave mode when power is first applied and then after approximately 250 ms they switch to half-wave mode.

PMG rectifiers were designed for external control of the brake's DC-switching. PMG rectifiers are primarily used in across-the-line applications where the brake power is supplied by the motor terminals, but they may also be used in situations where the brake power is supplied separately from the brake rectifier.

There are two ways to apply the fast acting rectifiers:

- The first method, known as "Overexcitation," provides fast brake release. The brake coil is selected like a half-wave system (45% of the AC supply voltage).
- The second method, known as "Reduced Power Holding," provides very fast brake stopping. The brake coil is selected like a full-wave system (90% of the AC supply voltage).

IMPORTANT NOTE

If the motor is connected to a frequency inverter, soft start, or is a two-speed motor, then seperate AC power must be supplied to the brake rectifier.

PMG Rectifier Dimensions

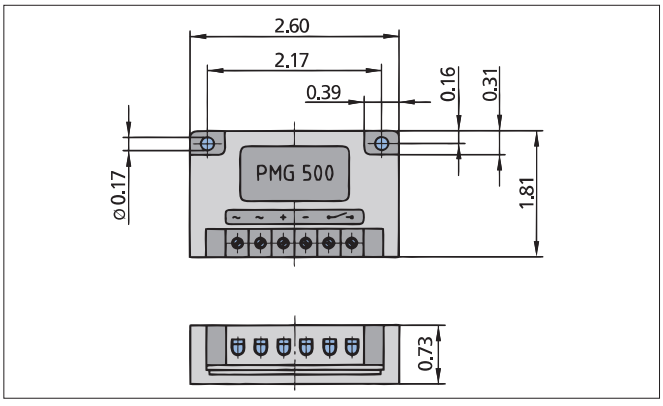

Ratings & Part Numbers

Model Type	PMG 500
Part Number	19140200
Protection (electronics)	Coated
Color	Black
Input Voltage (V_{AC})	200-500V_{AC} +/- 10%
Output Voltage (V_{DC})	(V_{DC}=0.45 x V_{AC}) - As Half-Wave (V_{DC}=0.90 x V_{AC}) - As Full-Wave
Rated Current @ 40°C	4.0 A
Rated Current @ 75°C	2.8 A
Temperature Range	-15°C to 80°C
DC-Switching via	External Contact

Braking Method

Braking Method	Break Release (Start)	Brake Engage (Stop)	Power Source
40	Standard	Very Fast (Reduced Power Holding)	Motor terminals
30	Fast (Overecitation)	Standard (AC Switching)	Motor terminals
35	Fast (Overecitation)	Fast (DC Switching)	Motor terminals
55	Standard	Very Fast (Reduced Power Holding)	Seperate power
45	Fast (Overecitation)	Standard (AC Switching)	Seperate power
50	Fast (Overecitation)	Fast (DC Switching)	Seperate power

Basic Connection (AC & DC Switching)

The PMG brake system can be connected for standard stopping (AC-Switching), fast stopping (DC-Switching) and very fast stopping (Reduced power holding & DC-Switching). Fast brake release can also be achieved by selecting a different brake coil combination.

STANDARD STOPPING (AC-SWITCHING)

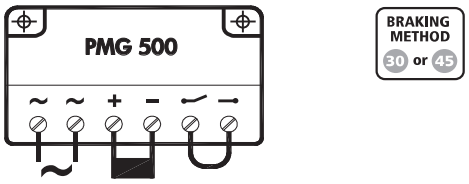

~ & ~	+ & -	⏜ & ⏜
AC BRAKE VOLTAGE	DC BRAKE	JUMPER

FAST & VERY FAST STOPPING (DC-SWITCHING)

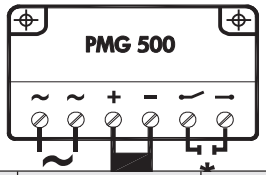

~ & ~	+ & -	⏜ & ⏜
AC BRAKE VOLTAGE	DC BRAKE	NORMALLY OPEN CONTACT

* The normally open contact/s (NO) is not supplied by NORD it must close at the same time power is supplied to the brake. The contact must be capable of switching inductive loads and/or be rated at IEC AC3.

Brake Times & Electrical Selection

Brake timing performance is critical in selecting the optimal brake system. NORD brakes can provide exceptional performance in terms of the release (start) times and engagement (stop) times. Use the following guidelines in order to select the correct brake control components and connections.

1) Determine if the brake needs to be wired directly from the motor terminal block or powered by a separate source.

- If you are using a frequency inverter, soft-start or a two speed motor you will need to supply the rectifier from a separate power source.

- If the motor is powered direct across-the-line the rectifier power can be supplied from the motor's terminal block.

2) What type of performance do I need?

- Is the standard brake performance OK?

- Is a higher performance required for fast brake release or very fast brake stopping?

3) Determine the brake supply voltage and check the rectifier compatability using the table on the page 6.

Selection Suggestions

When Fast or Very Fast Stopping is Recommended

Any applications that require quick stops and positive action at stand-still

Recommended Applications

- conveyors and inclined conveyors
- hoists and lifts
- bulk material handling equipment (bucket elevators, idler conveyor's).

⚠ WARNING

Hoisting (lifting/lowering) applications - must have the brake wired for fast response (DC-switching) Hoisting (lifting/lowering) applications must have the brake wired for fast response to protect against injury or damage to the equipment.

When Fast-Release is Recommended (Overexcitation)

Any application that is very high-cycling with frequent starts and stops. These applications require the brake to release very-quickly in order to avoid excessive heat build-up in the AC motor and brake coil.

Recommended Applications

- Index conveyors
- Diverters

Power Source	Brake Release (start)	Brake engagement (stop)	Braking Method *	Rectifier
Motor Terminal Block	Standard	Very Fast (Reduced power holding)	40	GPE or PMG 500
	Fast (Overexcitation)	Standard (AC switching)	30	GPE or PMG 500
	Fast (Overexcitation)	Fast (DC switching)	35	GPE or PMG 500
Seperate Power Source	Standard	Very Fast (Reduced power holding)	55	GPU or PMG 500
	Fast (Overexcitation)	Standard (AC switching)	45	GPU or PMG 500
	Fast (Overexcitation)	Fast (DC switching)	50	GPU or PMG 500

*** Braking methods referenced in connection diagrams on pages 7-11.**

Rectifier Supply Voltage (VAC)	Brake Coil Voltage (VDC)	Braking Method	Rectifier Type	Rectifier P/N	BRE 5	BRE 10	BRE 20	BRE 40	BRE 60	BRE 100	BRE 150	BRE 250	BRE 400	BRE 800	BRE 1200
208 (200-208)	105	30	GPE20L	19140230	X	X	X	X							
	105	30	PMG500	19140200					X	X	X	X	X	X	X
	105	35	GPE20L	19140230	X	X	X	X							
	105	35	PMG500	19140200					X	X	X	X	X	X	X
	180	40	GPE20L	19140230	X	X	X	X	X	X	X				
	180	40	PMG500	19140200								X	X	X	X
	105	45	GPU20L	19140090	X	X	X	X							
	105	45	PMG500	19140200					X	X	X	X	X	X	X
	105	50	GPU20L	19140090	X	X	X	X							
	105	50	PMG500	19140200					X	X	X	X	X	X	X
	180	55	GPU20L	19140090	X	X	X	X	X	X	X				
	180	55	PMG500	19140200								X	X	X	X
230 (220-240)	105	30	GPE20L	19140230	X	X	X	X							
	105	30	PMG500	19140200					X	X	X	X	X	X	X
	105	35	GPE20L	19140230	X	X	X	X	X	X	X				
	105	35	PMG500	19140200								X	X	X	X
	205	40	GPE20L	19140230	X	X	X	X	X	X	X				
	205	40	PMG500	19140200								X	X	X	X
	105	45	GPU20L	19140090	X	X	X	X							
	105	45	PMG500	19140200					X	X	X	X	X	X	X
	105	50	GPU20L	19140090	X	X	X	X							
	105	50	PMG500	19140200					X	X	X	X	X	X	X
	205	55	GPU20L	19140090	X	X	X	X	X	X	X				
	205	55	PMG500	19140200								X	X	X	X
332	180	30	GPE40L	19140240	X	X	X	X	X	X	X				
	180	30	PMG500	19140200								X	X	X	X
	180	35	GPE40L	19140240	X	X	X	X	X	X	X				
	180	35	PMG500	19140200								X	X	X	X
	180	45	GPU40L	19140170	X	X	X	X	X	X	X				
	180	50	GPU40L	19140170	X	X	X	X	X	X	X				
400 (380-415)	180	30	GPE40L	19140240	X	X	X	X	X	X	X				
	180	30	PMG500	19140200								X	X	X	X
	180	35	GPE40L	19140240	X	X	X	X	X	X	X				
	180	35	PMG500	19140200								X	X	X	X
	180	45	GPU20L	19140090	X	X	X	X	X	X	X				
	180	45	PMG500	19140200								X	X	X	X
	180	50	GPU20L	19140090	X	X	X	X	X	X	X				
	180	50	PMG500	19140200								X	X	X	X
460 (440-480)	205	30	GPE40L	19140240	X	X	X	X	X	X	X				
	205	30	PMG500	19140200								X	X	X	X
	205	35	GPE40L	19140240	X	X	X	X	X	X	X				
	205	35	PMG500	19140200								X	X	X	X
	205	45	GPU40L	19140170	X	X	X	X	X	X	X				
	205	45	PMG500	19140200								X	X	X	X
	205	50	GPU40L	19140170	X	X	X	X	X	X	X				
	205	50	PMG500	19140200								X	X	X	X

FAST ACTING BRAKE RECTIFIERS (GPE, GPU & PMG)

GP101A — POWERED FROM MOTOR TERMINAL BLOCK — FAST-RELEASE (OVER EXCITATION) — NORMAL STOPPING (AC-SWITCHING) — 30

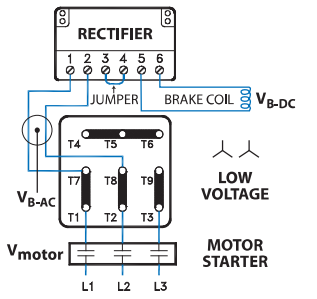

MOTOR	RECTIFIER	V_{motor}	V_{B-AC}	V_{B-DC}
230YY/460Y	GPE20L	230 VAC	230 VAC	105 VDC

GP101B — POWERED FROM MOTOR TERMINAL BLOCK — FAST-RELEASE (OVER EXCITATION) — NORMAL STOPPING (AC-SWITCHING) — 30

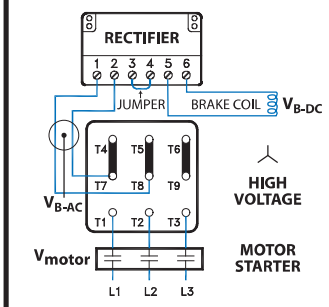

MOTOR	RECTIFIER	V_{motor}	V_{B-AC}	V_{B-DC}
230YY/460Y	GPE20L	460 VAC	230 VAC	105 VDC

GP101C — POWERED FROM MOTOR TERMINAL BLOCK — FAST-RELEASE (OVER EXCITATION) — NORMAL STOPPING (AC-SWITCHING) — 30

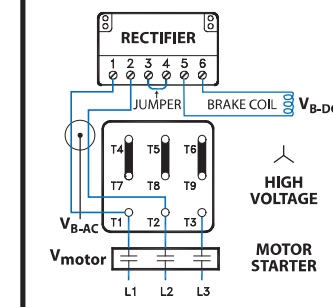

MOTOR	RECTIFIER	V_{motor}	V_{B-AC}	V_{B-DC}
230YY/460Y	GPE40L	460 VAC	460 VAC	205 VDC

GP101D — POWERED FROM MOTOR TERMINAL BLOCK — FAST-RELEASE (OVER EXCITATION) — NORMAL STOPPING (AC-SWITCHING) — 30

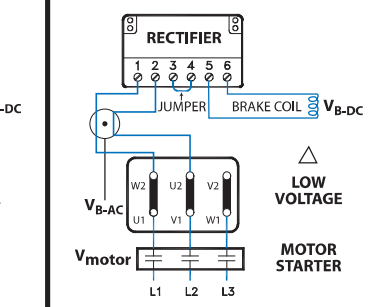

MOTOR	RECTIFIER	V_{motor}	V_{B-AC}	V_{B-DC}
208Δ/360Y	GPE20L	208 VAC	208 VAC	105 VDC
230Δ/400Y	GPE20L	230 VAC	230 VAC	105 VDC
400Δ/690Y	GPE40L	400 VAC	400 VAC	180 VDC
460Δ/Y	GPE40L	460 VAC	460 VAC	205 VDC

GP101E — POWERED FROM MOTOR TERMINAL BLOCK — FAST-RELEASE (OVER EXCITATION) — NORMAL STOPPING (AC-SWITCHING) — 30

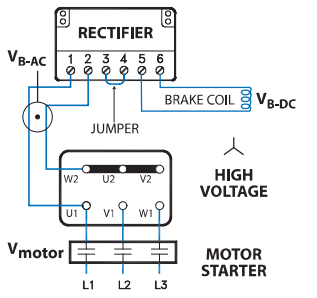

MOTOR	RECTIFIER	V_{motor}	V_{B-AC}	V_{B-DC}
230Δ/400Y	GPE20L	400 VAC	230 VAC	105 VDC
332Δ/575Y	GPE40L	575 VAC	332 VAC	180 VDC

GP102A — POWERED FROM MOTOR TERMINAL BLOCK — FAST-RELEASE (OVER EXCITATION) — FAST STOPPING (DC-SWITCHING) — 35

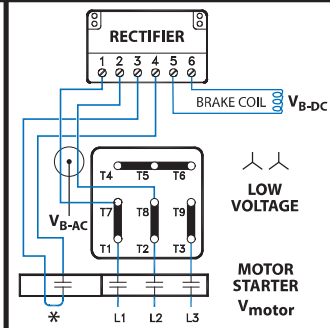

MOTOR	RECTIFIER	V_{motor}	V_{B-AC}	V_{B-DC}
230YY/460Y	GPE20L	230 VAC	230 VAC	105 VDC

GP102B — POWERED FROM MOTOR TERMINAL BLOCK — FAST-RELEASE (OVER EXCITATION) — FAST STOPPING (DC-SWITCHING) — 35

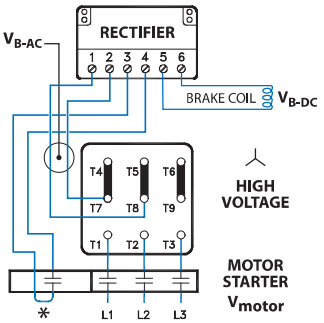

MOTOR	RECTIFIER	V_{motor}	V_{B-AC}	V_{B-DC}
230YY/460Y	GPE20L	460 VAC	230 VAC	105 VDC

GP102C — POWERED FROM MOTOR TERMINAL BLOCK — FAST-RELEASE (OVER EXCITATION) — FAST STOPPING (DC-SWITCHING) — 35

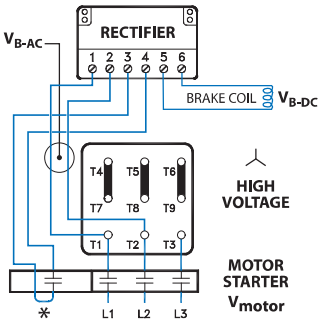

MOTOR	RECTIFIER	V_{motor}	V_{B-AC}	V_{B-DC}
230YY/460Y	GPE40L	460 VAC	460 VAC	205 VDC

GP102D — POWERED FROM MOTOR TERMINAL BLOCK — FAST-RELEASE (OVER EXCITATION) — FAST STOPPING (DC-SWITCHING) — 35

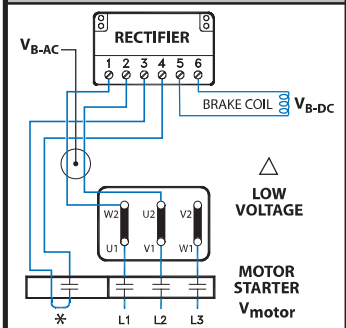

MOTOR	RECTIFIER	V_{motor}	V_{B-AC}	V_{B-DC}
208Δ/360Y	GPE20L	208 VAC	208 VAC	105 VDC
230Δ/400Y	GPE20L	230 VAC	230 VAC	105 VDC
400Δ/690Y	GPE40L	400 VAC	400 VAC	180 VDC
460Δ/Y	GPE40L	460 VAC	460 VAC	205 VDC

GP102E — POWERED FROM MOTOR TERMINAL BLOCK — FAST-RELEASE (OVER EXCITATION) — FAST STOPPING (DC-SWITCHING) — 35

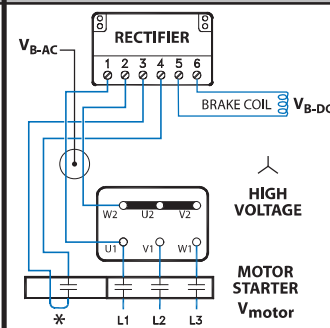

MOTOR	RECTIFIER	V_{motor}	V_{B-AC}	V_{B-DC}
230Δ/400Y	GPE20L	400 VAC	230 VAC	105 VDC
332Δ/575Y	GPE40L	575 VAC	332 VAC	180 VDC

GP103A — POWERED FROM MOTOR TERMINAL BLOCK — STANDARD RELEASE — VERY FAST STOPPING (DC-SWITCHING + REDUCED POWER HOLDING) — 40

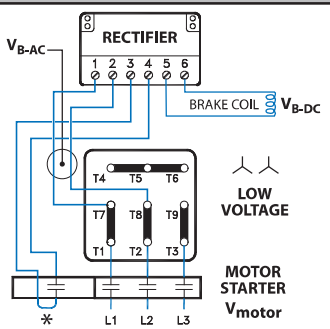

MOTOR	RECTIFIER	V_{motor}	V_{B-AC}	V_{B-DC}
230YY/460Y	GPE20L	230 VAC	230 VAC	205 VDC

GP103B — POWERED FROM MOTOR TERMINAL BLOCK — STANDARD RELEASE — VERY FAST STOPPING (DC-SWITCHING + REDUCED POWER HOLDING) — 40

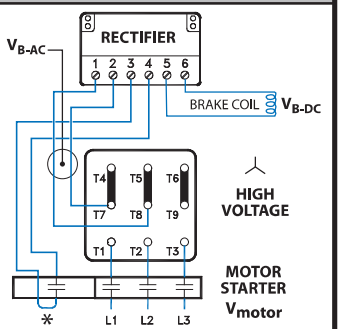

MOTOR	RECTIFIER	V_{motor}	V_{B-AC}	V_{B-DC}
230YY/460Y	GPE20L	460 VAC	230 VAC	205 VDC

✻ The normally open contact/s (NO) is not supplied by NORD. It must close at the same time power is supplied to the brake. The contact must be capable of switching inductive loads and/or be rated IEC AC3.

= Braking Method

NORD Gear Limited
Toll Free in Canada: 800.668.4378

NORD Gear Corporation
Toll Free in the United States: 888.314.6673

FAST ACTING BRAKE RECTIFIERS (GPE, GPU & PMG)

GP103C — POWERED FROM MOTOR TERMINAL BLOCK — STANDARD RELEASE — VERY FAST STOPPING (DC-SWITCHING + REDUCED POWER HOLDING) — 40

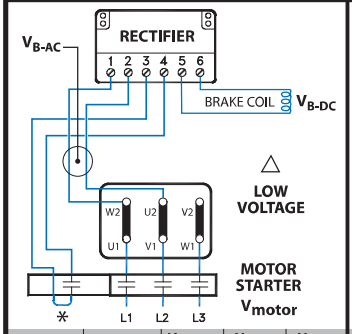

MOTOR	RECTIFIER	V_{motor}	V_{B-AC}	V_{B-DC}
208Δ/360Y	GPE20L	208 VAC	208 VAC	180 VDC
230Δ/400Y	GPE20L	230 VAC	230 VAC	205 VDC

GP103D — POWERED FROM MOTOR TERMINAL BLOCK — STANDARD RELEASE — VERY FAST STOPPING (DC-SWITCHING + REDUCED POWER HOLDING) — 40

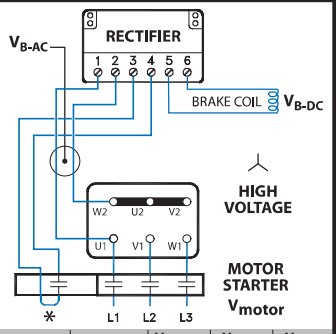

MOTOR	RECTIFIER	V_{motor}	V_{B-AC}	V_{B-DC}
230Δ/400Y	GPE20L	400 VAC	230 VAC	205 VDC

GP104A — SEPERATE POWER SOURCE — FAST-RELEASE (OVER EXCITATION) — NORMAL STOPPING (AC-SWITCHING) — 45

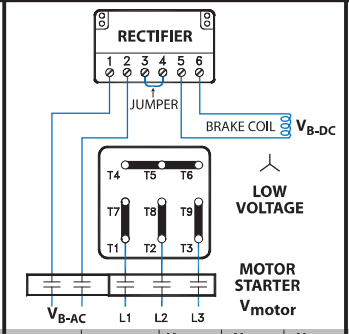

MOTOR	RECTIFIER	V_{motor}	V_{B-AC}	V_{B-DC}
230YY/460Y	GPU20L	230 VAC	230 VAC	105 VDC

GP104B — SEPERATE POWER SOURCE — FAST-RELEASE (OVER EXCITATION) — NORMAL STOPPING (AC-SWITCHING) — 45

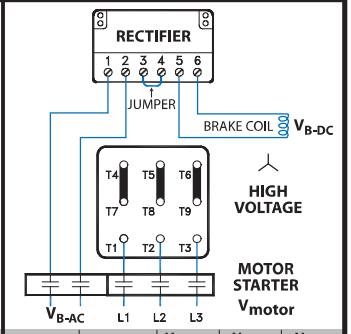

MOTOR	RECTIFIER	V_{motor}	V_{B-AC}	V_{B-DC}
230YY/460Y	GPU20L	460 VAC	230 VAC	105 VDC

GP104C — SEPERATE POWER SOURCE — FAST-RELEASE (OVER EXCITATION) — NORMAL STOPPING (AC-SWITCHING) — 45

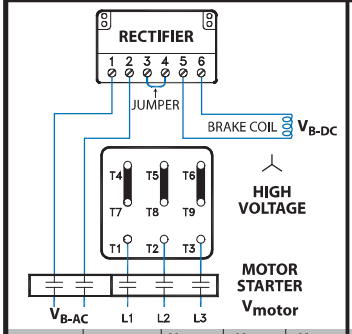

MOTOR	RECTIFIER	V_{motor}	V_{B-AC}	V_{B-DC}
230YY/460Y	GPU40L	460 VAC	460 VAC	205 VDC

GP104D — SEPERATE POWER SOURCE — FAST-RELEASE (OVER EXCITATION) — NORMAL STOPPING (AC-SWITCHING) — 45

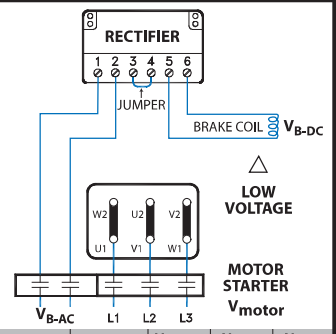

MOTOR	RECTIFIER	V_{motor}	V_{B-AC}	V_{B-DC}
208Δ/360Y	GPU20L	208 VAC	208 VAC	105 VDC
230Δ/400Y	GPU20L	230 VAC	230 VAC	105 VDC
400Δ/690Y	GPU40L	400 VAC	400 VAC	180 VDC
460Δ/Y	GPU40L	460 VAC	460 VAC	205 VDC

GP104E — SEPERATE POWER SOURCE — FAST-RELEASE (OVER EXCITATION) — NORMAL STOPPING (AC-SWITCHING) — 45

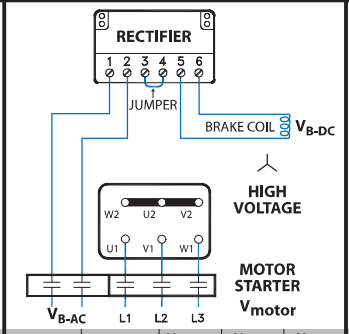

MOTOR	RECTIFIER	V_{motor}	V_{B-AC}	V_{B-DC}
230Δ/400Y	GPU20L	400 VAC	230 VAC	105 VDC
332Δ/575Y	GPU40L	575 VAC	332 VAC	180 VDC

GP105A — SEPERATE POWER SOURCE — FAST-RELEASE (OVER EXCITATION) — FAST STOPPING (DC-SWITCHING) — 50

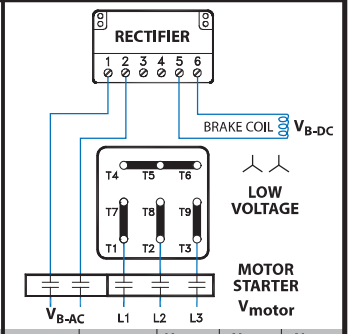

MOTOR	RECTIFIER	V_{motor}	V_{B-AC}	V_{B-DC}
230YY/460Y	GPU20L	230 VAC	230 VAC	105 VDC

GP105B — SEPERATE POWER SOURCE — FAST-RELEASE (OVER EXCITATION) — FAST STOPPING (DC-SWITCHING) — 50

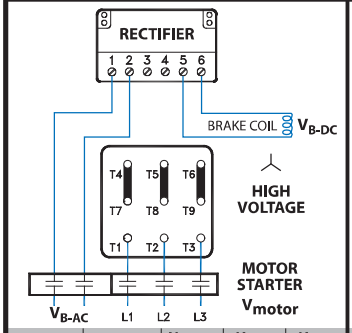

MOTOR	RECTIFIER	V_{motor}	V_{B-AC}	V_{B-DC}
230YY/460Y	GPU20L	460 VAC	230 VAC	105 VDC

GP105C — SEPERATE POWER SOURCE — FAST-RELEASE (OVER EXCITATION) — FAST STOPPING (DC-SWITCHING) — 50

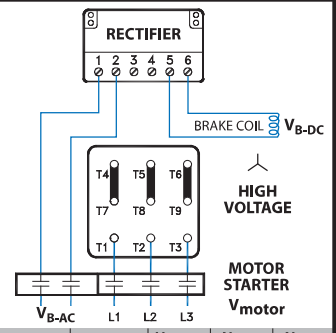

MOTOR	RECTIFIER	V_{motor}	V_{B-AC}	V_{B-DC}
230YY/460Y	GPU40L	460 VAC	460 VAC	205 VDC

GP105D — SEPERATE POWER SOURCE — FAST-RELEASE (OVER EXCITATION) — FAST STOPPING (DC-SWITCHING) — 50

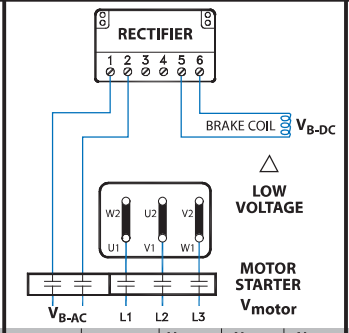

MOTOR	RECTIFIER	V_{motor}	V_{B-AC}	V_{B-DC}
208Δ/360Y	GPU20L	208 VAC	208 VAC	105 VDC
230Δ/400Y	GPU20L	230 VAC	230 VAC	105 VDC
400Δ/690Y	GPU40L	400 VAC	400 VAC	180 VDC
460Δ/Y	GPU40L	460 VAC	460 VAC	205 VDC

GP105E — SEPERATE POWER SOURCE — FAST-RELEASE (OVER EXCITATION) — FAST STOPPING (DC-SWITCHING) — 50

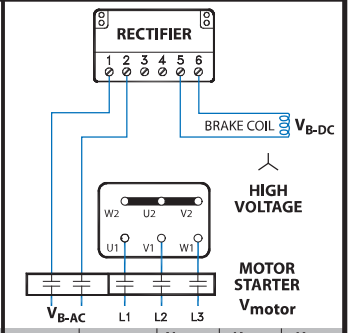

MOTOR	RECTIFIER	V_{motor}	V_{B-AC}	V_{B-DC}
230Δ/400Y	GPU20L	400 VAC	230 VAC	105 VDC
332Δ/575Y	GPU40L	575 VAC	332 VAC	180 VDC

✻ The normally open contact/s (NO) is not supplied by NORD. It must close at the same time power is supplied to the brake. The contact must be capable of switching inductive loads and/or be rated IEC AC3.

= Braking Method

NORD Gear Limited
Toll Free in Canada: 800.668.4378

NORD Gear Corporation
Toll Free in the United States: 888.314.6673

FAST ACTING BRAKE RECTIFIERS (GPE, GPU & PMG)

GP106A — SEPERATE POWER SOURCE — STANDARD RELEASE — VERY FAST STOPPING (DC-SWITCHING + REDUCED POWER HOLDING) — 55

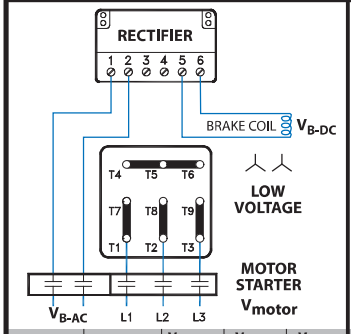

MOTOR	RECTIFIER	V_{motor}	V_{B-AC}	V_{B-DC}
230YY/460Y	GPU20L	230 VAC	230 VAC	205 VDC

GP106B — SEPERATE POWER SOURCE — STANDARD RELEASE — VERY FAST STOPPING (DC-SWITCHING + REDUCED POWER HOLDING) — 55

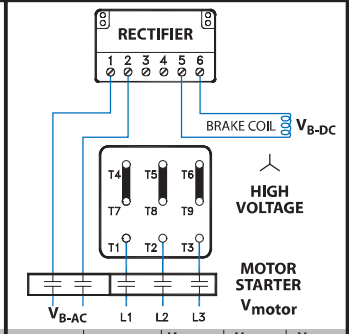

MOTOR	RECTIFIER	V_{motor}	V_{B-AC}	V_{B-DC}
230YY/460Y	GPU20L	460 VAC	230 VAC	205 VDC

GP106C — SEPERATE POWER SOURCE — STANDARD RELEASE — VERY FAST STOPPING (DC-SWITCHING + REDUCED POWER HOLDING) — 55

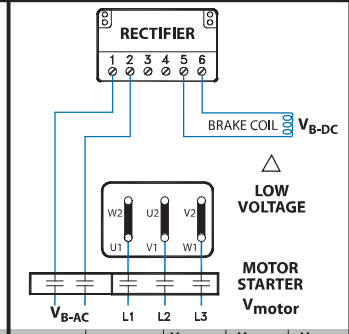

MOTOR	RECTIFIER	V_{motor}	V_{B-AC}	V_{B-DC}
208Δ/360Y	GPU20L	208 VAC	208 VAC	180 VDC
230Δ/400Y	GPU20L	230 VAC	230 VAC	205 VDC

GP106D — SEPERATE POWER SOURCE — STANDARD RELEASE — VERY FAST STOPPING (DC-SWITCHING + REDUCED POWER HOLDING) — 55

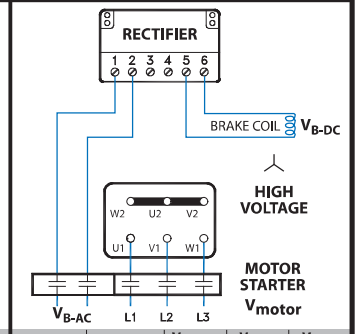

MOTOR	RECTIFIER	V_{motor}	V_{B-AC}	V_{B-DC}
230Δ/400Y	GPU20L	400 VAC	230 VAC	205 VDC

PMG101A — POWERED FROM MOTOR TERMINAL BLOCK — FAST-RELEASE (OVER EXCITATION) — NORMAL STOPPING (AC-SWITCHING) — 30

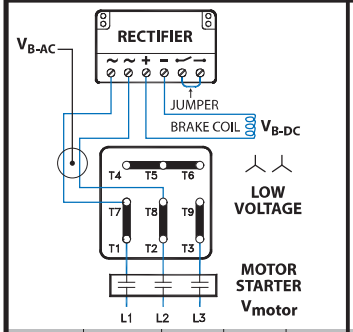

MOTOR	RECTIFIER	V_{motor}	V_{B-AC}	V_{B-DC}
230YY/460Y	PMG500	230 VAC	230 VAC	105 VDC

PMG101B — POWERED FROM MOTOR TERMINAL BLOCK — FAST-RELEASE (OVER EXCITATION) — NORMAL STOPPING (AC-SWITCHING) — 30

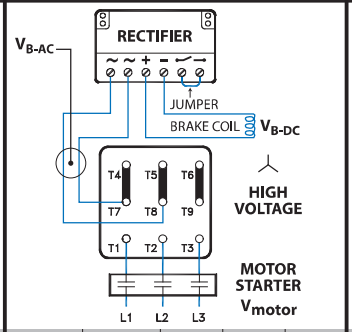

MOTOR	RECTIFIER	V_{motor}	V_{B-AC}	V_{B-DC}
230YY/460Y	PMG500	460 VAC	230 VAC	105 VDC

PMG101C — POWERED FROM MOTOR TERMINAL BLOCK — FAST-RELEASE (OVER EXCITATION) — NORMAL STOPPING (AC-SWITCHING) — 30

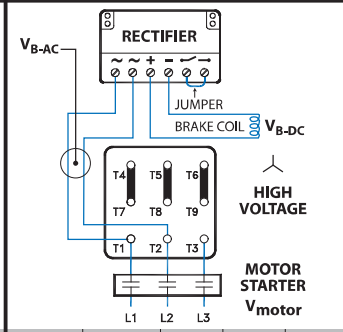

MOTOR	RECTIFIER	V_{motor}	V_{B-AC}	V_{B-DC}
230YY/460Y	PMG500	460 VAC	460 VAC	205 VDC

PMG101D — POWERED FROM MOTOR TERMINAL BLOCK — FAST-RELEASE (OVER EXCITATION) — NORMAL STOPPING (AC-SWITCHING) — 30

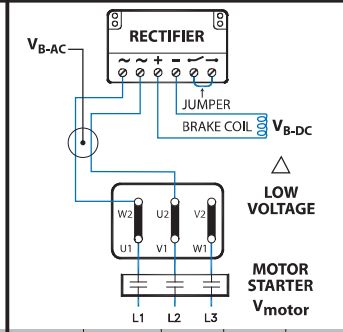

MOTOR	RECTIFIER	V_{motor}	V_{B-AC}	V_{B-DC}
208Δ/360Y	PMG500	208 VAC	208 VAC	105 VDC
230Δ/400Y	PMG500	230 VAC	230 VAC	105 VDC
400Δ/690Y	PMG500	400 VAC	400 VAC	180 VDC
460Δ/Y	PMG500	460 VAC	460 VAC	205 VDC

PMG101E — POWERED FROM MOTOR TERMINAL BLOCK — FAST-RELEASE (OVER EXCITATION) — NORMAL STOPPING (AC-SWITCHING) — 30

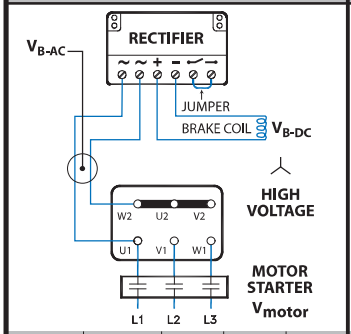

MOTOR	RECTIFIER	V_{motor}	V_{B-AC}	V_{B-DC}
230Δ/400Y	PMG500	400 VAC	230 VAC	105 VDC

PMG102A — POWERED FROM MOTOR TERMINAL BLOCK — FAST-RELEASE (OVER EXCITATION) — FAST STOPPING (DC-SWITCHING) — 35

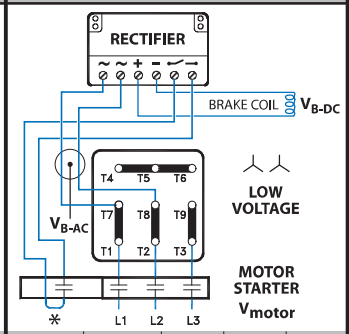

MOTOR	RECTIFIER	V_{motor}	V_{B-AC}	V_{B-DC}
230YY/460Y	PMG500	230 VAC	230 VAC	105 VDC

PMG102B — POWERED FROM MOTOR TERMINAL BLOCK — FAST-RELEASE (OVER EXCITATION) — FAST STOPPING (DC-SWITCHING) — 35

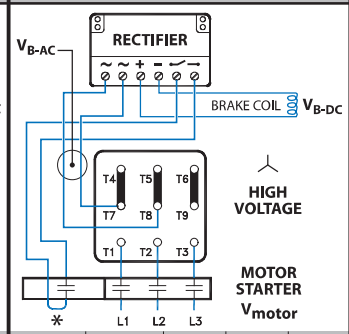

MOTOR	RECTIFIER	V_{motor}	V_{B-AC}	V_{B-DC}
230YY/460Y	PMG500	460 VAC	230 VAC	105 VDC

PMG102C — POWERED FROM MOTOR TERMINAL BLOCK — FAST-RELEASE (OVER EXCITATION) — FAST STOPPING (DC-SWITCHING) — 35

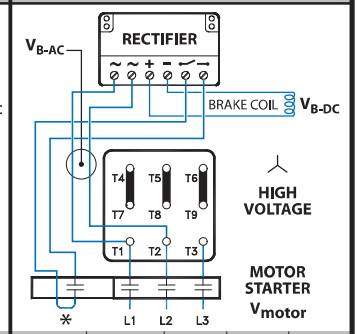

MOTOR	RECTIFIER	V_{motor}	V_{B-AC}	V_{B-DC}
230YY/460Y	PMG500	460 VAC	460 VAC	205 VDC

✻ The normally open contact/s (NO) is not supplied by NORD. It must close at the same time power is supplied to the brake. The contact must be capable of switching inductive loads and/or be rated IEC AC3.

= Braking Method

NORD Gear Limited
Toll Free in Canada: 800.668.4378

NORD Gear Corporation
Toll Free in the United States: 888.314.6673

FAST ACTING BRAKE RECTIFIERS (GPE, GPU & PMG)

PMG102D — 35

POWERED FROM MOTOR TERMINAL BLOCK
FAST-RELEASE (OVER EXCITATION)
FAST STOPPING (DC-SWITCHING)

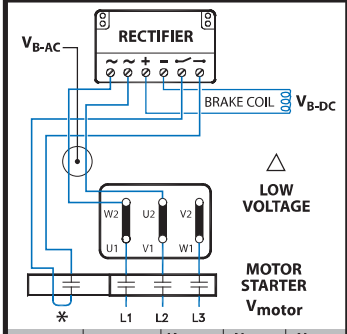

MOTOR	RECTIFIER	V_{motor}	V_{B-AC}	V_{B-DC}
208Δ/360Y	PMG500	208 VAC	208 VAC	105 VDC
230Δ/400Y	PMG500	230 VAC	230 VAC	105 VDC
400Δ/690Y	PMG500	400 VAC	400 VAC	180 VDC
460Δ/Y	PMG500	460 VAC	460 VAC	205 VDC

PMG102E — 35

POWERED FROM MOTOR TERMINAL BLOCK
FAST-RELEASE (OVER EXCITATION)
FAST STOPPING (DC-SWITCHING)

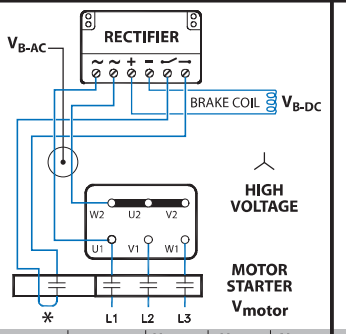

MOTOR	RECTIFIER	V_{motor}	V_{B-AC}	V_{B-DC}
230Δ/400Y	PMG500	400 VAC	230 VAC	105 VDC

PMG103A — 40

POWERED FROM MOTOR TERMINAL BLOCK
STANDARD RELEASE
VERY FAST STOPPING
(DC-SWITCHING + REDUCED POWER HOLDING)

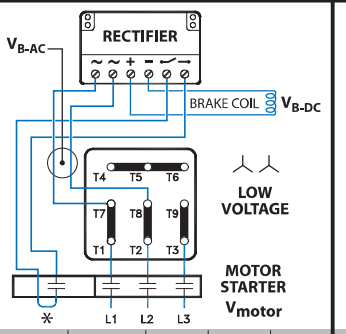

MOTOR	RECTIFIER	V_{motor}	V_{B-AC}	V_{B-DC}
230YY/460Y	PMG500	230 VAC	230 VAC	205 VDC

PMG103B — 40

POWERED FROM MOTOR TERMINAL BLOCK
STANDARD RELEASE
VERY FAST STOPPING
(DC-SWITCHING + REDUCED POWER HOLDING)

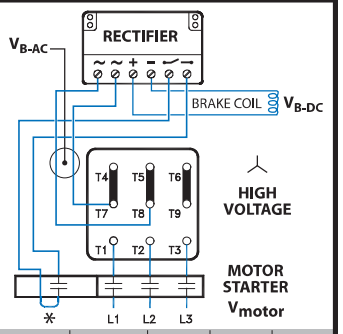

MOTOR	RECTIFIER	V_{motor}	V_{B-AC}	V_{B-DC}
230YY/460Y	PMG500	460 VAC	230 VAC	205 VDC

PMG103C — 40

POWERED FROM MOTOR TERMINAL BLOCK
STANDARD RELEASE
VERY FAST STOPPING
(DC-SWITCHING + REDUCED POWER HOLDING)

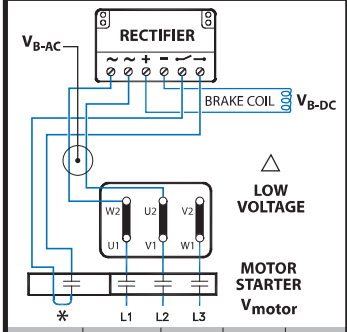

MOTOR	RECTIFIER	V_{motor}	V_{B-AC}	V_{B-DC}
208Δ/360Y	PMG500	208 VAC	208 VAC	180 VDC
230Δ/400Y	PMG500	230 VAC	230 VAC	205 VDC

PMG103D — 40

POWERED FROM MOTOR TERMINAL BLOCK
STANDARD RELEASE
VERY FAST STOPPING
(DC-SWITCHING + REDUCED POWER HOLDING)

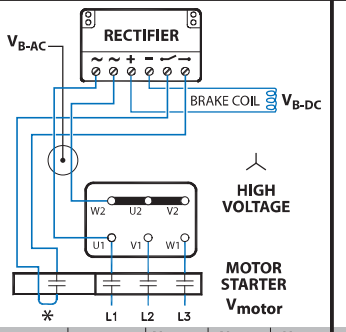

MOTOR	RECTIFIER	V_{motor}	V_{B-AC}	V_{B-DC}
230Δ/400Y	PMG500	400 VAC	230 VAC	205 VDC

PMG104A — 45

SEPERATE POWER SOURCE
FAST-RELEASE (OVER EXCITATION)
NORMAL STOPPING (AC-SWITCHING)

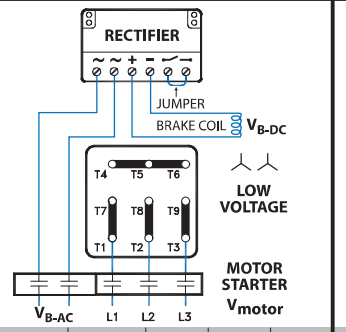

MOTOR	RECTIFIER	V_{motor}	V_{B-AC}	V_{B-DC}
230YY/460Y	PMG500	230 VAC	230 VAC	105 VDC

PMG104B — 45

SEPERATE POWER SOURCE
FAST-RELEASE (OVER EXCITATION)
NORMAL STOPPING (AC-SWITCHING)

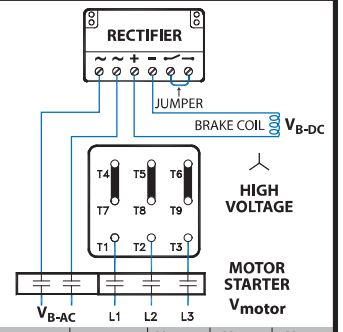

MOTOR	RECTIFIER	V_{motor}	V_{B-AC}	V_{B-DC}
230YY/460Y	PMG500	460 VAC	230 VAC	105 VDC

PMG104C — 45

SEPERATE POWER SOURCE
FAST-RELEASE (OVER EXCITATION)
NORMAL STOPPING (AC-SWITCHING)

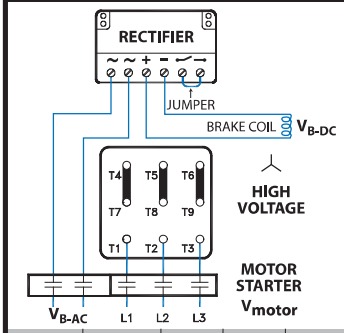

MOTOR	RECTIFIER	V_{motor}	V_{B-AC}	V_{B-DC}
230YY/460Y	PMG500	460 VAC	460 VAC	205 VDC

PMG104D — 45

SEPERATE POWER SOURCE
FAST-RELEASE (OVER EXCITATION)
NORMAL STOPPING (AC-SWITCHING)

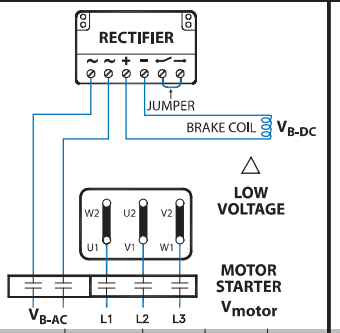

MOTOR	RECTIFIER	V_{motor}	V_{B-AC}	V_{B-DC}
208Δ/360Y	PMG500	208 VAC	208 VAC	105 VDC
230Δ/400Y	PMG500	230 VAC	230 VAC	105 VDC
400Δ/690Y	PMG500	400 VAC	400 VAC	180 VDC
460Δ/Y	PMG500	460 VAC	460 VAC	205 VDC

PMG104E — 45

SEPERATE POWER SOURCE
FAST-RELEASE (OVER EXCITATION)
NORMAL STOPPING (AC-SWITCHING)

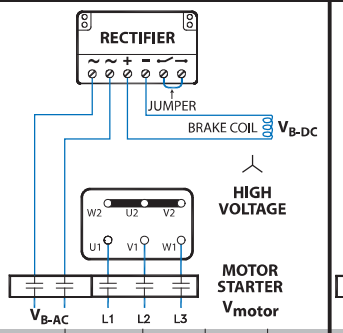

MOTOR	RECTIFIER	V_{motor}	V_{B-AC}	V_{B-DC}
230Δ/400Y	PMG500	400 VAC	230 VAC	105 VDC

PMG105A — 50

SEPERATE POWER SOURCE
FAST-RELEASE (OVER EXCITATION)
FAST STOPPING (DC-SWITCHING)

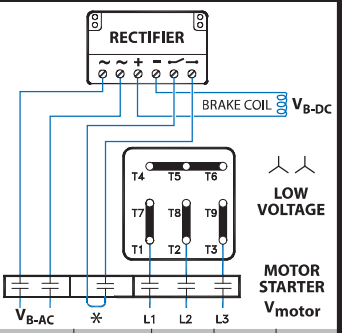

MOTOR	RECTIFIER	V_{motor}	V_{B-AC}	V_{B-DC}
230YY/460Y	PMG500	230 VAC	230 VAC	105 VDC

✻ The normally open contact/s (NO) is not supplied by NORD. It must close at the same time power is supplied to the brake. The contact must be capable of switching inductive loads and/or be rated IEC AC3.

= Braking Method

NORD Gear Limited
Toll Free in Canada: 800.668.4378

NORD Gear Corporation
Toll Free in the United States: 888.314.6673

FAST ACTING BRAKE RECTIFIERS (GPE, GPU & PMG)

PMG105B — 50

SEPERATE POWER SOURCE
FAST-RELEASE (OVER EXCITATION)
FAST STOPPING (DC-SWITCHING)

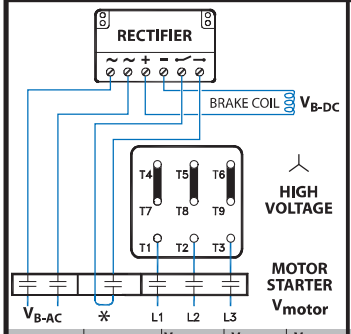

MOTOR	RECTIFIER	V_{motor}	V_{B-AC}	V_{B-DC}
230YY/460Y	PMG500	460 VAC	230 VAC	105 VDC

PMG105C — 50

SEPERATE POWER SOURCE
FAST-RELEASE (OVER EXCITATION)
FAST STOPPING (DC-SWITCHING)

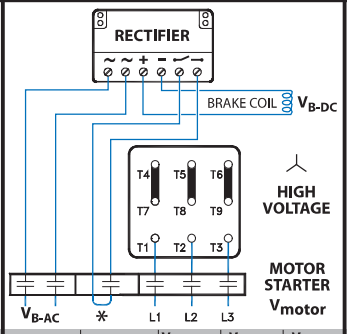

MOTOR	RECTIFIER	V_{motor}	V_{B-AC}	V_{B-DC}
230YY/460Y	PMG500	460 VAC	460 VAC	205 VDC

PMG105D — 50

SEPERATE POWER SOURCE
FAST-RELEASE (OVER EXCITATION)
FAST STOPPING (DC-SWITCHING)

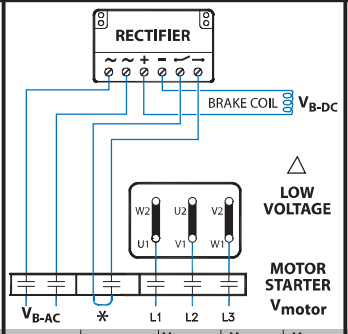

MOTOR	RECTIFIER	V_{motor}	V_{B-AC}	V_{B-DC}
208Δ/360Y	PMG500	208 VAC	208 VAC	105 VDC
230Δ/400Y	PMG500	230 VAC	230 VAC	105 VDC
400Δ/690Y	PMG500	400 VAC	400 VAC	180 VDC
460Δ/Y	PMG500	460 VAC	460 VAC	205 VDC

PMG105E — 50

SEPERATE POWER SOURCE
FAST-RELEASE (OVER EXCITATION)
FAST STOPPING (DC-SWITCHING)

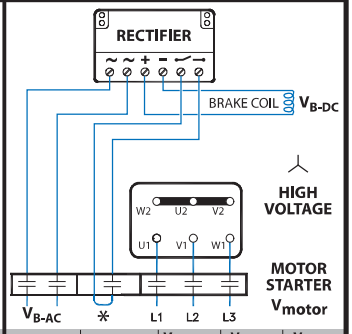

MOTOR	RECTIFIER	V_{motor}	V_{B-AC}	V_{B-DC}
230Δ/400Y	PMG500	400 VAC	230 VAC	105 VDC

PMG106A — 55

SEPERATE POWER SOURCE
STANDARD RELEASE
VERY FAST STOPPING
(DC-SWITCHING + REDUCED POWER HOLDING)

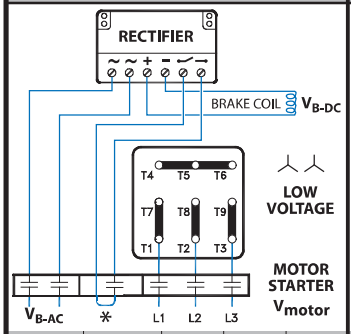

MOTOR	RECTIFIER	V_{motor}	V_{B-AC}	V_{B-DC}
230YY/460Y	PMG500	230 VAC	230 VAC	205 VDC

PMG106B — 55

SEPERATE POWER SOURCE
STANDARD RELEASE
VERY FAST STOPPING
(DC-SWITCHING + REDUCED POWER HOLDING)

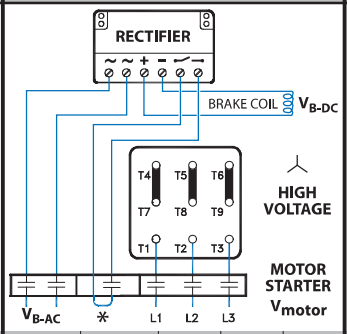

MOTOR	RECTIFIER	V_{motor}	V_{B-AC}	V_{B-DC}
230YY/460Y	PMG500	460 VAC	230 VAC	205 VDC

PMG106C — 55

SEPERATE POWER SOURCE
STANDARD RELEASE
VERY FAST STOPPING
(DC-SWITCHING + REDUCED POWER HOLDING)

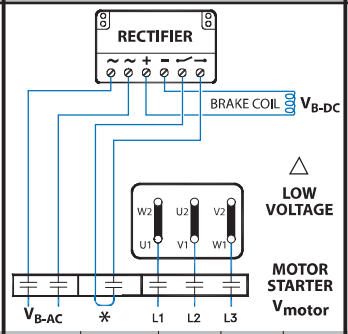

MOTOR	RECTIFIER	V_{motor}	V_{B-AC}	V_{B-DC}
208Δ/360Y	PMG500	208 VAC	208 VAC	180 VDC
230Δ/400Y	PMG500	230 VAC	230 VAC	205 VDC

PMG106D — 55

SEPERATE POWER SOURCE
STANDARD RELEASE
VERY FAST STOPPING
(DC-SWITCHING + REDUCED POWER HOLDING)

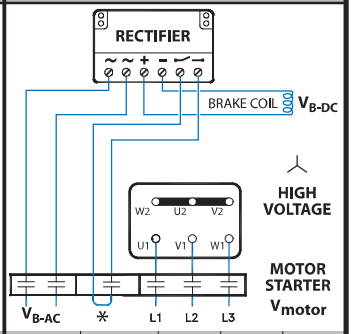

MOTOR	RECTIFIER	V_{motor}	V_{B-AC}	V_{B-DC}
230Δ/400Y	PMG500	400 VAC	230 VAC	205 VDC

✻ The normally open contact/s (NO) is not supplied by NORD. It must close at the same time power is supplied to the brake. The contact must be capable of switching inductive loads and/or be rated IEC AC3.

= Braking Method

NORD Gear Limited
Toll Free in Canada: 800.668.4378

NORD Gear Corporation
Toll Free in the United States: 888.314.6673

Current Sensing Relay (IR)

Modify

The current sensing relay, is used to achieve a fast brake engagement (stopping) without the use of external control equipment or additional wiring. The relay is mounted directly on the conduit box, and is powered from the motor's terminal block. The power leads for the relay replace one of the brass jumper bars on the terminal block of any single speed motor. The switch leads are connected to terminals 3 and 4 of the rectifier. When the power to the motor is shut off, the IR relay opens the brake circuit on the DC side which allows the brake to de-magnetize quickly.

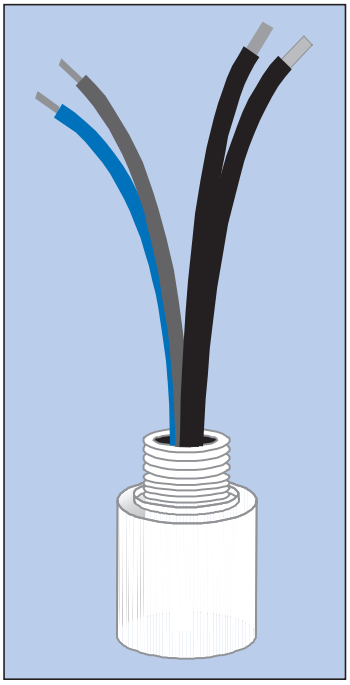

IMPORTANT NOTE

Current Sensing Relay Requirements

- Brake must be powered from the motor's terminal block (not seperately powered)
- Motor must be single speed and should not be powered by a frequency inverter or soft starter.

Part number	18556010	18556020
Reissmann Part Number	RSR 25-46	RSR 50-46
Primary Current Rating (black/white wires)	25A_{AC}	50 A_{AC}
Maximum Primary Current (black/white wires)	75A_{AC}	150 A_{AC}
Maximum Time at Maximum Primary Current	0.2 s	0.2 s
Maximum Cycles per hour	500	500
Switching Voltage	42 - 550V_{DC}	42 - 550V_{DC}
Switching Current (red/blue wires)	1.0 A_{DC}	1.0 A_{DC}
Holding Current ❶	< 0.7 A_{AC}	< 0.7 A_{AC}
Delay Time ❷	18 ms	18 ms
Enclosure Rating	IP65	IP65
Ambient Temp.	- 25 to 90 °C (- 40 to 167 °F)	- 25 to 90 °C (- 40 to 167 °F)

❶ Relative to the distortion created by the magnetising current of the motor.

❷ Additional setting time delay added to the DC-setting time of the brake circuit.

IR Relay Wiring Diagram

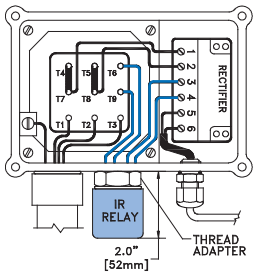

Rectifier			IR-Relay Wires to Rectifier	
Model Type	Part Number	Design	Red	Blue
GVE20L	1914000	Full-wave	4	3
GHE40L	19141010	Half-wave	4	3
GHE50L	19141020	Half-wave	4	3
GPE20L	19140230	Push-hybrid	4	3
GPE40L	19140240	Push-hybrid	4	3
GUE40V	19140300	Dual Wave	4	3

Conduit Box Thread Adapter

Thread	Motor Frame	Part Number	O-Ring
M20	63-71	18542006*	25501615
M25	80-90	18522253	25501615
M32	100-132	18522320	25501615
M40	160-180	18522400 + 18522253	25501615

* Spacer

IR Relay Selection Table for 4-Pole Motors

Type	Efficiency	230/460 V 60 Hz	460V D 60 Hz	332/575V 60 Hz	208/360 V 60 Hz	230/400V 50 Hz	400/690V 50 Hz
63S/4	SE (IE1)	25A	-	25A	25A	25A	-
63SP/4	PE (IE3)	25A	-	25A	-	25A	-
63L/4	SE (IE1)	25A	-	25A	25A	25A	-
63LP/4	PE (IE3)	25A	-	25A	-	25A	-
71S/4	SE (IE1)	25A	-	25A	25A	25A	-
71SP/4	PE (IE3)	25A	-	25A	-	25A	-
71L/4	SE (IE1)	25A	-	25A	25A	25A	-
71LP/4	PE (IE3)	25A	-	25A	-	25A	-
80S/4	SE (IE1)	25A	-	25A	25A	25A	-
80SH/4	EE (IE2)	-	-	-	-	25A	-
80SP/4	PE (IE3)	25A	-	25A	-	25A	-
80L/4	SE (IE1)	25A	-	25A	25A	25A	-
80LH/4	EE (IE2)	25A	-	25A	-	25A	-
80LP/4	PE (IE3)	25A	-	25A	-	25A	-
90S/4	SE (IE1)	25A	-	25A	25A	25A	-
90SH/4	EE (IE2)	25A	-	25A	-	25A	-
90SP/4	PE (IE3)	25A	-	25A	-	25A	-
90L/4	SE (IE1)	25A	-	25A	25A	25A	-
90LH/4	EE (IE2)	25A	-	25A	-	25A	-
90LP/4	PE (IE3)	25A	-	25A	-	25A	-
100L/4	SE (IE1)	25A	-	25A	25A	-	25A
100LH/4	EE (IE2)	25A	-	25A	-	-	25A
100LP/4	PE (IE3)	25A	-	25A	-	-	25A
100LA/4	SE (IE1)	25A	-	25A	25A	-	25A
100AH/4	EE (IE2)	-	-	-	-	-	25A
100AP/4	PE (IE3)	-	-	-	-	-	25A
112M/4	SE (IE1)	-	-	-	-	-	25A
112MH/4	EE (IE2)	25A	-	25A	-	-	25A
112MP/4	PE (IE3)	25A	-	25A	-	-	25A
132S/4	SE (IE1)	25A	-	25A	25A	-	25A
132SH/4	EE (IE2)	25A	-	25A	-	-	25A
132SP/4	PE (IE3)	25A	-	25A	-	-	25A
132M/4	SE (IE1)	25A	-	25A	25A	-	25A
132MH/4	EE (IE2)	25A	-	25A	-	-	25A
132LH/4	EE (IE2)	-	-	-	-	-	25A
132MA/4	SE (IE1)	-	-	-	-	-	25A
132MP/4	PE (IE3)	25A	-	25A	-	-	25A

25 A (P/N 18556010) – IR Relay is rated for 25 Amp motor phase current.

50 A (P/N 18556020) – IR Relay is rated for 50 Amp motor phase current.

N/A – IR Relay option is not available.

Observe the efficiency law requirements for the country that the motor will be utilized in.

IR Relay Selection Table for 4-Pole Motors Ctd.

Type	Efficiency	230/460 V 60 Hz	460V D 60 Hz	332/575V 60 Hz	208/360 V 60 Hz	230/400V 50 Hz	400/690V 50 Hz
160SH/4	EE (IE2)	-	-	-	-	-	25A
160SP/4	PE (IE3)	-	-	-	-	-	25A
160M/4	SE (IE1)	25A	-	25A	-	-	25A
160MH/4	EE (IE2)	25A	-	25A	-	-	25A
160MP/4	PE (IE3)	25A	-	25A	-	-	25A
160L/4	SE (IE1)	25A	-	25A	-	-	25A
160LH/4	EE (IE2)	25A	-	25A	-	-	50 A
160LP/4	PE (IE3)	25A	-	25A	-	-	50 A
180MX/4	SE (IE1)	50 A	-	25A	-	-	25A
180MH/4	EE (IE2)	50 A	-	25A	-	-	50 A
180MP/4	PE (IE3)	50 A	-	25A	-	-	50 A
180LX/4	SE (IE1)	50 A	-	50 A	-	-	25A
180LH/4	EE (IE2)	50 A	-	50 A	-	-	50 A
180LP/4	PE (IE3)	50 A	-	50 A	-	-	50 A
200LX/4	SE (IE1)	50 A	-	50 A	-	-	50 A
200XH/4	EE (IE2)	N/A	-	50 A	-	-	N/A
225RP/4	PE (IE3)	-	50 A	50 A	-	-	N/A
225SH/4	EE (IE2)	-	50 A	50 A	-	-	N/A
225SP/4	PE (IE3)	-	50 A	50 A	-	-	N/A
225MH/4	EE (IE2)	-	50 A	N/A	-	-	N/A
225MP/4	PE (IE3)	-	50 A	N/A	-	-	N/A
250WH/4	EE (IE2)	-	N/A	N/A	-	-	N/A
250WP/4	PE (IE3)	-	50 A	N/A	-	-	N/A
280SH/4	EE (IE2)	-	N/A	N/A	-	-	N/A
280SP/4	PE (IE3)	-	N/A	N/A	-	-	N/A
280MH/4	EE (IE2)	-	N/A	N/A	-	-	N/A
280MP/4	PE (IE3)	-	N/A	N/A	-	-	N/A
315SH/4	EE (IE2)	-	N/A	N/A	-	-	N/A
315SP/4	PE (IE3)	-	N/A	N/A	-	-	N/A
315MH/4	EE (IE2)	-	N/A	N/A	-	-	N/A
315MP/4	PE (IE3)	-	N/A	N/A	-	-	N/A
315RH/4	EE (IE2)	-	N/A	N/A	-	-	N/A
315RP/4	PE (IE3)	-	N/A	N/A	-	-	N/A
315LH/4	EE (IE2)	-	N/A	N/A	-	-	N/A
315LP/4	PE (IE3)	-	N/A	N/A	-	-	N/A

25 A (P/N 18556010) – IR Relay is rated for 25 Amp motor phase current.

50 A (P/N 18556020) – IR Relay is rated for 50 Amp motor phase current.

N/A – IR Relay option is not available.

Observe the efficiency law requirements for the country that the motor will be utilized in.

CURRENT SENSING BRAKE RELAY (IR) INSTALLATION & MAINTENANCE

IR Relay Typical Connection Diagrams

IR101A

POWERED FROM MOTOR TERMINAL BLOCK
STANDARD-RELEASE
FAST STOPPING (DC-SWITCHING)

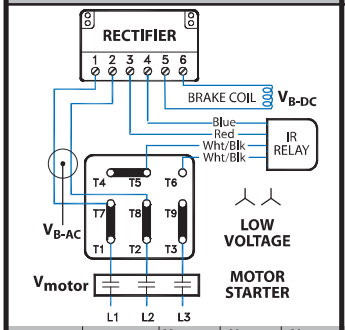

MOTOR	RECTIFIER	V_{motor}	V_{B-AC}	V_{B-DC}
208-230Δ/460Y	GVE20	208VAC	230 VAC	205 VDC
230YY/460Y	GVE20	230 VAC	230 VAC	205 VDC

IR101B

POWERED FROM MOTOR TERMINAL BLOCK
STANDARD-RELEASE
FAST STOPPING (DC-SWITCHING)

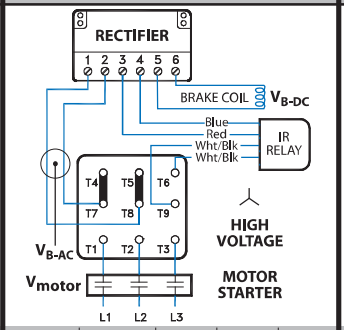

MOTOR	RECTIFIER	V_{motor}	V_{B-AC}	V_{B-DC}
230YY/460Y	GVE20	460 VAC	230 VAC	205 VDC

IR102A

POWERED FROM MOTOR TERMINAL BLOCK
STANDARD-RELEASE
FAST STOPPING (DC-SWITCHING)

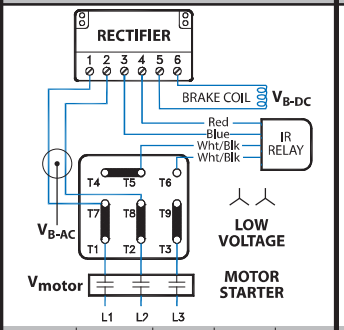

MOTOR	RECTIFIER	V_{motor}	V_{B-AC}	V_{B-DC}
208-230Δ/460Y	GHE40	208VAC	230 VAC	105 VDC
230YY/460Y	GHE40	230 VAC	230 VAC	105 VDC

IR102B

POWERED FROM MOTOR TERMINAL BLOCK
STANDARD-RELEASE
FAST STOPPING (DC-SWITCHING)

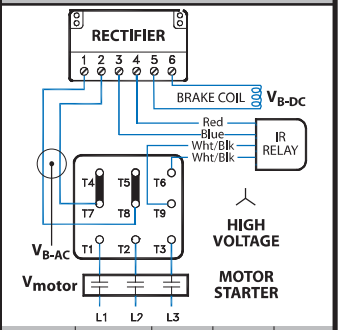

MOTOR	RECTIFIER	V_{motor}	V_{B-AC}	V_{B-DC}
230YY/460Y	GHE40	460 VAC	230 VAC	105 VDC

IR103

POWERED FROM MOTOR TERMINAL BLOCK
STANDARD-RELEASE
FAST STOPPING (DC-SWITCHING)

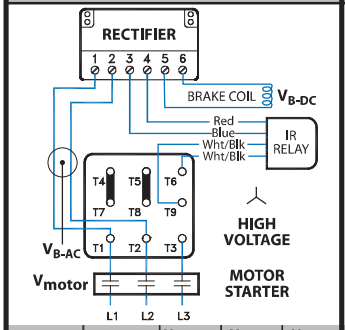

MOTOR	RECTIFIER	V_{motor}	V_{B-AC}	V_{B-DC}
230YY/460Y	GHE40	460 VAC	460VAC	205 VDC

IR301

POWERED FROM MOTOR TERMINAL BLOCK
STANDARD-RELEASE
FAST STOPPING (DC-SWITCHING)

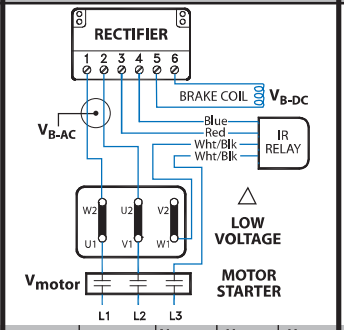

MOTOR	RECTIFIER	V_{motor}	V_{B-AC}	V_{B-DC}
208Δ/360Y	GVE20	208 VAC	208 VAC	180 VDC
230Δ/400Y	GVE20	230 VAC	230 VAC	205 VDC

IR401

POWERED FROM MOTOR TERMINAL BLOCK
STANDARD-RELEASE
FAST STOPPING (DC-SWITCHING)

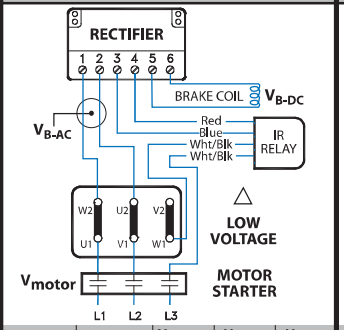

MOTOR	RECTIFIER	V_{motor}	V_{B-AC}	V_{B-DC}
460Δ/800Y	GHE40	460 VAC	460 VAC	205 VDC

IR501

POWERED FROM MOTOR TERMINAL BLOCK
STANDARD-RELEASE
FAST STOPPING (DC-SWITCHING)

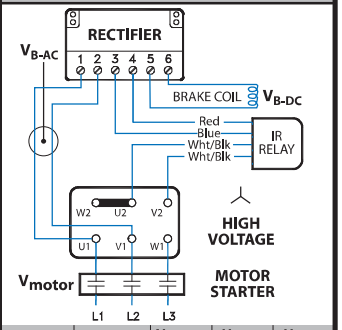

MOTOR	RECTIFIER	V_{motor}	V_{B-AC}	V_{B-DC}
332Δ/575Y	GHE50	575 VAC	575 VAC	250 VDC

IR601

POWERED FROM MOTOR TERMINAL BLOCK
STANDARD-RELEASE
FAST STOPPING (DC-SWITCHING)

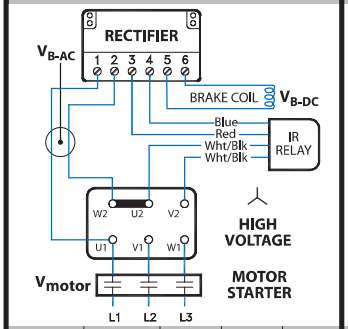

MOTOR	RECTIFIER	V_{motor}	V_{B-AC}	V_{B-DC}
230Δ/400Y	GVE20	400 VAC	230 VAC	205 VDC
230Δ/400Y	GHE40	400 VAC	230 VAC	105 VDC

IR602

POWERED FROM MOTOR TERMINAL BLOCK
STANDARD-RELEASE
FAST STOPPING (DC-SWITCHING)

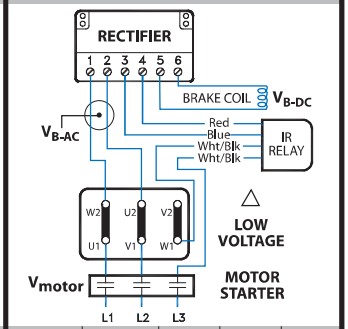

MOTOR	RECTIFIER	V_{motor}	V_{B-AC}	V_{B-DC}
400Δ/690Y	GHE40	400 VAC	400 VAC	180 VDC

IMPORTANT NOTE

Requirements

- Brake must be powered from the motor's terminal block (not seperately powered)
- Motor must be a single speed and should not be powered by a frequency inverter or soft starter.

= Braking Method

CURRENT SENSING BRAKE RELAY (IR) INSTALLATION & MAINTENANCE

IR Relay with GUE40V Dual Wave Rectifier

IR701A — POWERED FROM MOTOR TERMINAL BLOCK — STANDARD-RELEASE — FAST STOPPING (DC-SWITCHING) — 15

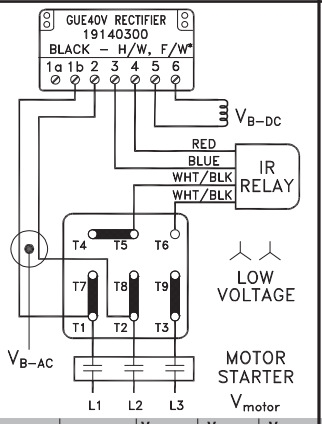

MOTOR	RECTIFIER	Vmotor	VB-AC	VB-DC
208-230YY/460Y	GUE40V	208 VAC	230 VAC	205 VDC
230YY/460Y	GUE40V	230 VAC	230 VAC	205 VDC

IR701B — POWERED FROM MOTOR TERMINAL BLOCK — STANDARD-RELEASE — FAST STOPPING (DC-SWITCHING) — 15

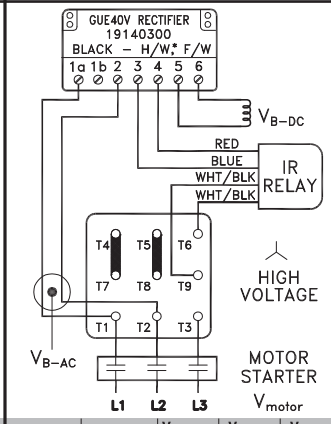

MOTOR	RECTIFIER	Vmotor	VB-AC	VB-DC
208-230YY/460Y	GUE40V	460 VAC	460 VAC	205 VDC
230YY/460Y	GUE40V	460 VAC	460 VAC	205 VDC

IR702A — POWERED FROM MOTOR TERMINAL BLOCK — STANDARD-RELEASE — FAST STOPPING (DC-SWITCHING) — 15

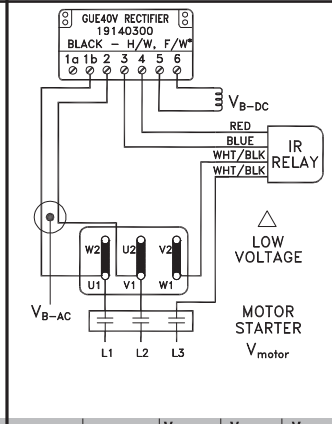

MOTOR	RECTIFIER	Vmotor	VB-AC	VB-DC
208Δ/360Y	GUE40V	208 VAC	208 VAC	180 VDC
230Δ/400Y	GUE40V	230 VAC	230 VAC	205 VDC

IR702B — POWERED FROM MOTOR TERMINAL BLOCK — STANDARD-RELEASE — FAST STOPPING (DC-SWITCHING) — 15

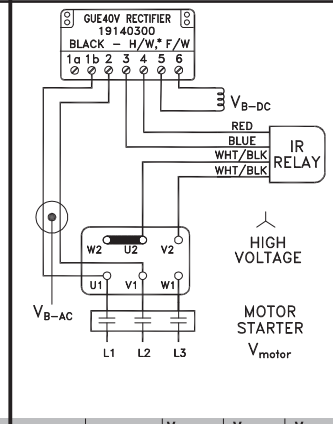

MOTOR	RECTIFIER	Vmotor	VB-AC	VB-DC
230Δ/400Y	GUE40V	400 VAC	400 VAC	180 VDC

GPE Rectifier for External DC-Switching with IR Relay

IR151A — POWERED FROM MOTOR TERMINAL BLOCK — FAST RELEASE (OVER EXCITATION) — FAST STOPPING (DC-SWITCHING) — 35

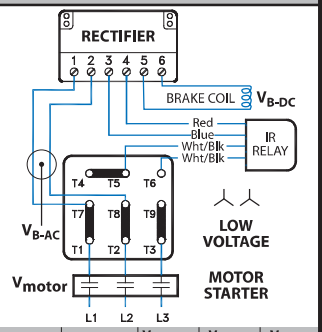

MOTOR	RECTIFIER	Vmotor	VB-AC	VB-DC
230YY/460Y	GPE20L	230 VAC	230 VAC	105 VDC

IR151B — POWERED FROM MOTOR TERMINAL BLOCK — STANDARD-RELEASE — FAST STOPPING (DC-SWITCHING) — 35

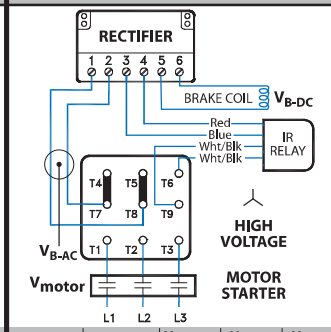

MOTOR	RECTIFIER	Vmotor	VB-AC	VB-DC
230YY/460Y	GPE20L	460 VAC	230 VAC	105 VDC

IR152A — POWERED FROM MOTOR TERMINAL BLOCK — STANDARD-RELEASE — VERY FAST STOPPING (REDUCED POWER HOLD) — 40

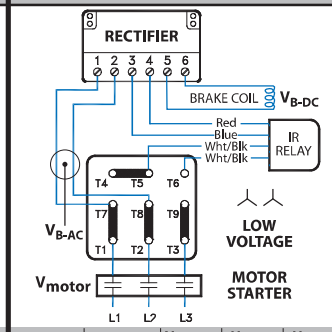

MOTOR	RECTIFIER	Vmotor	VB-AC	VB-DC
230YY/460Y	GPE20L	230 VAC	230 VAC	205 VDC

IR152B — POWERED FROM MOTOR TERMINAL BLOCK — STANDARD-RELEASE — VERY FAST STOPPING (REDUCED POWER HOLD) — 40

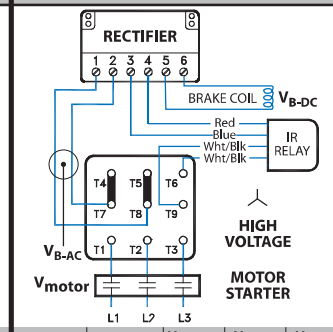

MOTOR	RECTIFIER	Vmotor	VB-AC	VB-DC
230YY/460Y	GPE20L	460 VAC	230 VAC	205 VDC

IMPORTANT NOTE

Requirements

- Brake must be powered from the motor's terminal block (not seperately powered)
- Motor must be a single speed and should not be powered by a frequency inverter or soft starter.

= Braking Method

NEMA/IEC/SERVO INPUT ADAPTERS & THEIR COUPLINGS

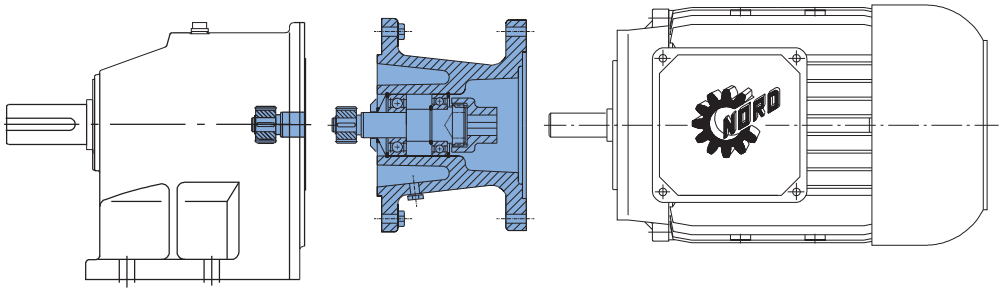

⚠ WARNING

While working on the gear drive system, make sure the power from the prime mover is isolated or secured on "lock-out" to prevent accidental start-up and to safeguard against injury!

NEMA/ IEC Motor Adapters

Motor adapters allow for easy installation and removal of industry standard motors. Motor adapters consist of a coupling and an adapter housing that connects the motor to the gear reducer.

NORD Gear supplies a coupling that is to be mounted on the motor shaft. It is important that the coupling is properly positioned.

- For NEMA Input Adapters, follow the Motor Installation Instructions on pages 3-5.
- For IEC Input Adapters, the supplied coupling will mount directly against the motor shaft shoulder. No locating measurements need to be taken.

IMPORTANT NOTE

Some of the larger IEC inputs will have a coupling spacer included to help locate the coupling. Slide the spacer against the motor shaft shoulder, slide the coupling against the spacer and tighten set screw(s).

IMPORTANT NOTE

For the larger motor adapters (IEC160 / N250TC and larger), an Automatic Lubricator may be supplied. This will need to be activated at the time of startup. For operation andactivation instructions, refer to user manual U45200. Motor adapter option AI and AN do not utilize an Automatic Lubricator and are lubricated for life.

NEMA/IEC Motor Weight Limits

When mounting a motor to a NORD NEMA C-face motor adapter it is important to consider the motor's weight. Following is a table that includes the maximum motor weight the NEMA adapter can support. If the motor exceeds the listed weight is must be externally supported. When a C-face mounted motor is externally supported care must be taken to ensure that the support system does not impose additional pre-loads on the NEMA motor adapter.

NEMA Motor Weight Limit

Motor FRAME	56C	140TC	180TC	210TC	250TC	280TC
Max Weight [lb]	66	110	176	221	441	551
Motor FRAME	**320TC**	**360TC**	**400TC**			
Max Weight [lb]	772	1544[4)]	1544			

IEC Motor Weight Limit

Motor FRAME	63	71	80	90	100	112	132
Max Weight [kg]	25	30	50[1)]	50	80[2)]	80	100
Motor FRAME	**160**	**180**	**200**	**225**	**250**	**280**	**315**
Max Weight [kg]	250[3)]	250	350	500	1000	1000	1500

1) ≤ 40 kg SK 920072.1, SK 92072.1, SK 071.1, SK 0182.1
2) ≤ 60 kg SK 1382.1, SK 92372.1, SK 12063, SK 372.1, SK 371.1
3) ≤ 200 kg SK 42, SK 4282, SK 9042.1, SK 42125
4) ≤ 1103 lb SK 62, SK 72, SK 73, SK 83, SK 93, SK 9072.1, SK 6282, SK 7282, SK 7382, SK 8382, SK 9392

Couplings

Couplings are made with tough abrasion resistant materials, which resist most chemicals and petroleum products. They are electrically isolated (prevent metal to metal contact) and require no lubrication or maintenance. Depending upon the size of the input, NORD provides either a gear or a jawtype coupling.

NORD supplies three different types of couplings depending on the size of input: "J" style, "M" style and "Jaw" style coupling. Following are instructions on how to properly mount each type of coupling onto the motor.

NEMA/IEC/SERVO INPUT ADAPTERS & THEIR COUPLINGS

Couplings for the NEMA and IEC Adapters

Depending on the size of the input adapter to the gearbox, NORD Gear supplies two styles of couplings - BoWex® (gear tooth) and Rotex® (jaw) couplings.

BoWex® Couplings

NORD motor adapter input shafts have a machined spline on the end. NORD incorporates two styles of BoWex® couplings, the "J" and "M" styles. The "J" style is a one-piece coupling with a metal hub and nylon spline. The "M" style is a two-piece coupling – the metal hub and a nylon sleeve. Nylon and steel components allow them to operate in high ambient temperatures without lubrication or maintenance.

- Nylon sleeves resist dirt, moisture, most chemicals and petroleum products
- No lubrication required
- Operating Conditions: -22°F - 212°F (-30°C - 100°C)
- Higher temperature coupling sleeve available up to 250°F (120°C)
- Special bore available

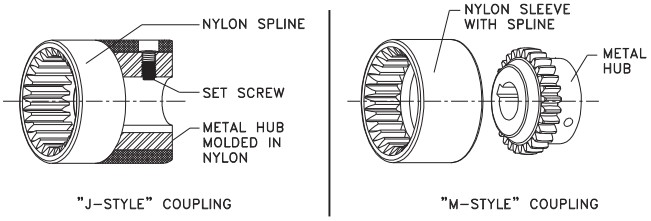

BoWex® Couplings Mechanical Ratings "J" Style (NEMA & IEC)

Coupling Type	Rated Torque Cont.	Rated Torque Peak	Input Adapter Sizes	Bore Size
BoWex® J14	44.3 lb-in 5 N-m	88.5 lb-in 10 N-m	N56C IEC63, IEC71	5/8" 11mm, 14mm
BoWex® J24	106 lb-in 12 N-m	212 lb-in 24 N-m	N56C, N140TC IEC80, IEC90	5/8", 7/8" 19mm, 24mm
BoWex® J28	398 lb-in 45 N-m	1,195 lb-in 135 N-m	N180TC IEC100, IEC112	1-1/8" 28mm

BoWex® Couplings Mechanical Ratings "M" Style (NEMA & IEC)

Coupling Type	Rated Torque Cont.	Rated Torque Peak	Input Adapter Sizes	Bore Size
BoWex® M38	708 lb-in 80 N-m	2,124 lb-in 240 N-m	N180TC, N210TC IEC132	1-1/8", 1-3/8" 38 mm
BoWex® M42	885 lb-in 100 N-m	2,655 lb-in 300 N-m	N250TC IEC160	1-5/8" 42 mm
BoWex® M48	1,239 lb-in 140 N-m	3,717 lb-in 420 N-m	N280TC IEC180	1-7/8" 48 mm

Rotex® Couplings

The cast iron jaw type couplings have an integral urethane "spider" that provides smooth transmission of the motor torque. A set screw on the coupling prohibits axial movement along the motor shaft.

- Excellent shock and vibration dampening
- Excellent resistance to oils and most chemicals
- No metal-to-metal contact
- Operating Conditions: -22°F - 195°F (-30°C - 90°C)
- Higher temperature material (Hytrel) spider available up to 230°F (110°C)
- Low temperature materials available upon request
- Special bores available

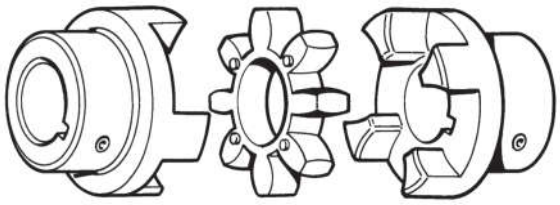

Rotex® Couplings Mechanical Ratings "R" Style (NEMA & IEC)

Coupling Type	Rated Torque Cont.	Rated Torque Peak	Input Adapter Sizes	Bore Size
Rotex® R42	3,983 lb-in 450 N-m	7,966 lb-in 900 N-m	AN250TC	1-5/8"
Rotex® R48	4,647 lb-in 525 N-m	9,294 lb-in 1,050 N-m	AN280TC AI160, AI180	1-7/8" 42, 42 mm
Rotex® R55	6,063 lb-in 685 N-m	12,126 lb-in 1,370 N-m	AN320TC AI200	2-1/8" 55 mm
Rotex® R65	8,319 lb-in 940 N-m	12,125 lb-in 1,880 N-m	N320TC, AN360TC[1)] IEC200, AI200, IEC225	2-1/8", 2-3/8" 55, 55, 60mm
Rotex® R75	16,992 lb-in 1,920 N-m	33,954 lb-in 3,840 N-m	AN360TC[2)], AN400TC AI250, AI280	2-3/8", 2-7/8" 70, 80 mm
Rotex® R90	31,860 lb-in 3,600 N-m	63,720 lb-in 7,200 N-m	N360TC IEC250, IEC280, IEC315, AI315	2-3/8" 70, 80, 85, 85 mm

1) AN360TC with R350 flange
2) AN360TC with R450 flange

Couplings for Servo Adapters

NORD Gear supplies Rotex® (jaw) couplings for SERVO adapter connections.

Rotex® Couplings Mechanical Ratings (Servo Adapter)

Coupling Type	Rated Torque Cont.	Rated Torque Peak	Input Adapter Sizes	Reducer Input Flange	Bore Size
Rotex® R19 GS	150 lb-in 17 Nm	301 lb-in 34 Nm	-SEP100, -SEK100	160S	19 mm
Rotex® R24 GS	531 lb-in 60 Nm	1062 lb-in 120 Nm	-SEP130, -SEK130	160S, 250S	24 mm
Rotex® R28 GS	1416 lb-in 160 Nm	2832 lb-in 320 Nm	-SEP165, -SEK165,	160S, 250S	32 mm
			-SEP215, -SEK215	250S	38 mm
Rotex® R48 GS	4647 lb-in 525 Nm	9293 lb-in 1050 Nm	-SEP215, -SEK215	300S	38 mm
			-SEP300, -SEK300	300S	48 mm
			-SEP300, -SEK300	350	

SEP adapter couplings are for keyed motor shafts.
SEK adapter couplings are clamping style for shafts without key.
Alternate bores upon request.

"J" Style Coupling NEMA C-face Motor Installation

1. Measure the distance from the face of the input adapter to the face of the splined shaft and record that measurement as A in the equation below.
2. Measure depth of coupling engagement zone and record the measurement as "B" in the equation below.
3. Add "A" + "B" and subtract 0.08" (~2mm) from the distance. This needs to be done so that the coupling will not be preloaded after installation!
4. Use that measurement to locate the coupling from the face of the motor onto the shaft.
5. Once in place, tighten the set screw to lock the coupling in place. It is recommended that the key is staked or bonded (Loctite) in place to prohibit the key from vibrating out.
6. Mount the motor onto the input adapter with customer supplied bolts. Make sure that the coupling from the adapter and the motor engage securely. Use lock washers or Loctite to prohibit bolts from becoming loose from vibration.

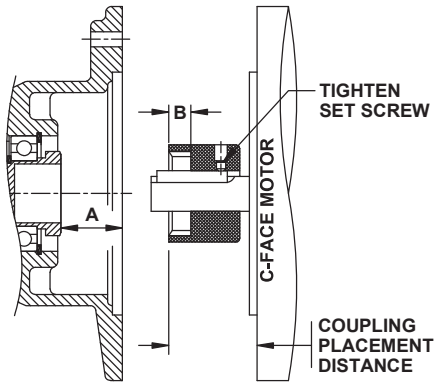

MEASURED DISTANCES A + B		SUBTRACT DISTANCE	COUPLING PLACEMENT DISTANCE
____	+ ____	- 0.080" (2mm) =	____

"M" Style Coupling NEMA C-face Motor Installation

1 Measure the distance from the face of the input adapter to the face of the splined shaft & record that measurement.
2. Subtract 0.31" (~8mm) from the distance. This needs to be done so that the coupling will not be preloaded after installation!
3. Use that measurement to locate the coupling from the face of the motor onto the shaft.
4. Once in place, tighten the set screw to lock the coupling in place. It is recommended that the key is staked or bonded (Loctite) in place to prohibit the key from vibrating out.
5. Mount the motor onto the input adapter with customer supplied bolts. Make sure that the coupling from the adapter and the motor engage securely. Use lock washers or Loctite to prohibit bolts from becoming loose from vibration.

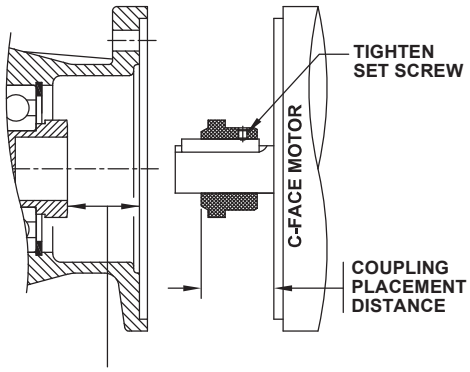

MEASURED DISTANCE	SUBTRACT DISTANCE	COUPLING PLACEMENT DISTANCE
____	- 0.310" (8mm) =	____

"Jaw" Style Coupling NEMA C-face Installation for Type N Adapters and Servo Adapters

1. Measure the distance from the face of the input adapter to the face of the coupling as shown and record that measurement.

2. Subtract the "X" dimension from the measured distance. This needs to be done so that the coupling will not be preloaded after installation!

3. Use that measurement to locate the coupling from the face of the motor onto the shaft.

4. The metal portion of the coupling should be heated up prior to assembly, generally 250°F to 300°F (120°C to 150°C).

> ***IMPORTANT NOTE***
>
> DO NOT HEAT THE URETHANE SPIDER.

5. Once in place, tighten the setscrew to lock coupling in place. Let the coupling cool down before placing the spider into the jaws. It is recommended that the key is staked or bonded (Loctite) in place to prohibit the key from vibrating out.

6. Mount the motor onto the input adapter with customer supplied bolts. Make sure that the coupling from the adapter and the motor engage securely. Use lock washers or Loctite to prohibit bolts from becoming loose from vibration.

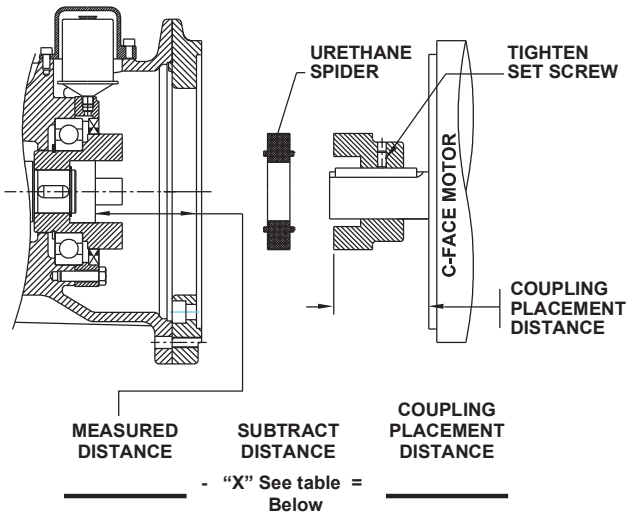

Coupling Size	"X" (Subtract this value from measured distance)
R14	0.06" (1.5 mm)
R19 & R24	0.08" (2.0 mm)
R28	0.10" (2.5 mm)
R38 & 42	0.12" (3.0 mm)
R48	0.14" (3.5 mm)
R55	0.16" (4.0 mm)
R65	0.18" (4.5 mm)
R75	0.20" (5.0 mm)
R90	0.22" (5.5 mm)

NEMA/IEC/SERVO INPUT ADAPTERS & THEIR COUPLINGS

"Jaw" Style Coupling NEMA C-face Installation for Type AN Adapters

1. Remove the motor shaft's key and replace with the key supplied with the adapter. Reference Motor Parallel Keys table below.

IMPORTANT NOTE

NORD SUPPLIES A SPECIAL MOTOR SHAFT KEY
DO NOT USE THE KEY SUPPLIED WITH THE MOTOR!

2. For the attachment of the coupling half, heat up the coupling half to approx. 212°F (100°C). Position the coupling half as follows:
   - Push AI160, AI180 and AI225 on to the spacer bushing.
   - Push AI200, AI250, AI280 and AI315 on to the motor shaft collar.
   - AN250TC–AN400TC until dimension A has been reached (reference Position of the Coupling Half on the NEMA Motor Shaft table below)

IMPORTANT NOTE

DO NOT HEAT THE URETHANE SPIDER.

2. Once in place, apply Loctite to the setscrew and tighten the setscrew to lock coupling in place. Let the coupling cool down before placing the spider into the jaws. It is recommended that the key is staked or bonded (Loctite) in place to prohibit the key from vibrating out.

3. Attach the motor to the adapter. For the AN360TC and AN400TC adapters, attach the adapter flange to the motor first, then attach to the adapter.

Motor Parallel Keys			
IEC/NEMA Type	**Coupling**	**Shaft ø**	**Motor Shaft's Key**
AI 160	R42	42 mm	12x8x45 mm
AI 180	R48	48 mm	14x9x45 mm
AN 250	R42	1.625 in	3/8x3/8x1 1/2 in
AN 280	R48	1.875 in	1/2x1/2x1 1/2 in
AI 200	R55	55 mm	16x10x50 mm
AN 320	R55	2.125 in	1/2x1/2x1 1/2 in
AI 225	R65	60 mm	18x11x70 mm
AN 360 R350	R65	2.375 in	5/8x5/8x2 1/4 in
AI 250	R75	65 mm	18x11x70 mm
AI 280	R75	75 mm	20x12x70 mm
AN 360 R450	R75	2.375 in	5/8x5/8x3 1/8 in
AN 400	R75	2.875 in	3/4x3/4x3 1/4 in

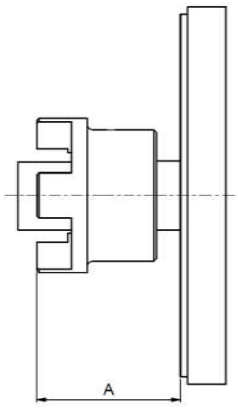

Coupling Half on the NEMA Motor Shaft		
NEMA type	**Coupling size**	**A [in]**
N250TC R350	R42	3.26
N250TC 300S	R42	3.38
N280TC R350	R48	3.44
N280TC 300S	R48	4.03
N320TC	R55	3.58
N360TC/350	R65	4.98
N360TC/450	R75	5.92
N400TC	R75	6.47

Re-greasing Option for AI...BRG1 and AN...BRG1

For the IEC/NEMA adapters AI and AN with option BRG1, grease the outer roller bearing with approx. 20–25 g of grease at the grease nipple. The grease nipple is located under a bolt-on inspection cover. Before re-greasing, unscrew the grease drain screw so that the excess grease can drain off. Remove the excess grease on the motor adapter.

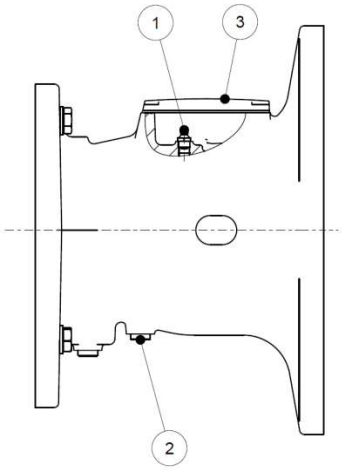

1 Conical grease nipple
2 Grease drain screw
3 Inspection cover

AUTOMATIC LUBRICATOR

Automatic Lubricator

Some NORD gear units with NEMA (or IEC) adapters ranging in size from N250TC-N400TC (or IEC160-IEC315) are supplied with a factory-installed, field-activated, PERMA® Classic Automatic Lubrication Cartridge. The automatic lubricator is used to dispense lubricant to the outer most roller bearing of the input NEMA (or IEC) input assembly. The lubrication cartridge must be activated prior to commissioning the gear unit. (Figures 1 & 2)

Some newer versions of the NEMA (or IEC) adapters also include a grease purge. The grease purge area is sealed for transportation; however, it is recommended that the G1/4 sealing screw be removed and that the grease collection container provided by NORD be installed just prior to activating the automatic lubricant dispenser. (Figure 3)

Principle of Operation

First the activation screw is threaded into the lubrication canister. Then the ring-eyelet on top of the activation screw is tightened until its breaking point. This causes a zinc-molybdenum gas generator to drop into a citric acid liquid electrolyte, which is contained within an elastic bladder. An electrochemical reaction slowly releases small amounts of hydrogen gas and gradually pressurizes the bladder, pushing the piston towards the lubrication chamber.

Grease is continuously injected into the lubrication point until the bearing cavity is full. Any back pressure from the bearing will cause the system to neutralize. The bladder inside the canister will continue to slowly build pressure so that once the equipment resumes normal operation; the lubricator will also resume its normal function.

The lubricator contains approximately 120 cm^3 or 120 ml (4.8 oz) of grease. For reference, a single stroke of a typical grease gun delivers approximately 1.0-1.2 cm^3 (0.03–0.04 oz) of grease. This means the canister contains approximately 100 strokes of grease. See Figure 1 for a detailed view of the PERMA® Lubricator.

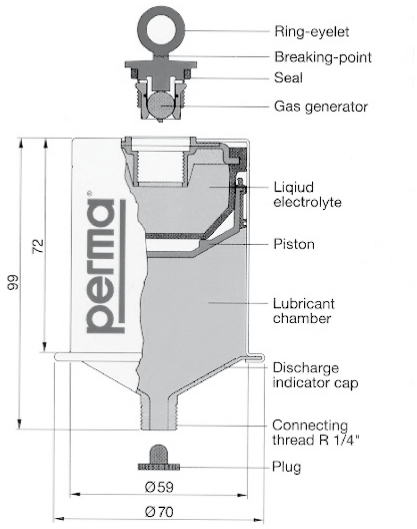

Figure 1 - PERMA® Automatic Lubrication Canister

NOTICE

- To prevent premature bearing failure, the lubrication dispenser must be activated prior to commissioning the gear reducer.
- The lubricator must only be used once and should never be opened or taken apart or permanent damage will result.
- Never unscrew the PERMA® canister from the lubrication point after activation or during the discharge period. This would cause a permanent pressure loss in the lubricator and would justify replacing the lubricator.

⚠ WARNING

- Avoid swallowing the gas generator, the liquid electrolyte, and the lubricant.
- Avoid contact of, the liquid electrolyte, and the lubricant with the eyes, skin or clothing.
- Observe all applicable MSDS sheets.
- Follow applicable local laws and regulations concerning waste disposal.

PERMA® Automatic Lubricator Options Supplied by NORD

NORD Part Number	28301000	28301010
Lubrication Option	Synthetic (standard)	Food Grade (optional)
PERMA® Classic Temperature Range ♦	0 to 40 °C (32 to 104 °F)	0 to 40 °C (32 to 104 °F)
Lubrication Volume	120 cm^3 or 120 ml (4.8 oz)	120 cm^3 or 120 ml (4.8 oz)
Grease Lubrication Mfg. / Type	Klüber / Petamo GHY 133	Lubriplate / FGL1
Lubrication Temperature Range ♦	-30 to 120 °C (-22 to 248 °F)	-18 to 120 °C (0 to 248 °F)

♦ The temperature range values shown do not apply to other components and/or lubricants within the gear reducer.

Lubricator Service Interval

The Automatic lubricator should be inspected approximately every 6 months. At the end of the lubrication period the piston becomes clearly visible through the clear nylon discharge indicator cap located at the bottom of the PERMA® canister (Figure 1); this helps indicate that the lubricant has been fully discharged at which time the lubricator should be replaced. When operating the gear unit 8 hours/day or less a replacement interval of 12 months or 1 year is possible. Ambient temperature will influence the discharge rate and may extend or shorten the replacement interval.

Ambient Considerations

The grease discharge rate is affected by the ambient temperature. PERMA® indicates that the lubricator contents will dispense for a 12 month period when the average temperature is 20 °C (68 °F). Grease dispensing rates depend primarily on average ambient conditions and not extreme highs and lows. Lower ambient temperatures will lead to slower dispensing rates and higher ambient temperatures will lead to faster dispensing rates.

Average Ambient Temperature	Discharge Period Months ♦
0 °C (32 °F)	>18
10 °C (50 °F)	18
20 °C (68 °F)	12
30 °C (86 °F)	6
40 °C (104 °F)	3

♦ Values are approximate.

Discharge can also be influenced by type of lubricant, vibration, and by the mating connecting parts in the lubrication system.

Activating the Automatic Lubricator

1. Loosen and remove the M8x16 assembly socket head cap screws (1251).
2. Carefully remove the protective cover (1252) installed over the automatic lubricator (1250-1).
3. Screw the activation screw (1250-2) into the automatic lubricator (1250-1) and twist the ring-eyelet until it reaches its breaking point.
4. Re-fit the cartridge cover (1252) and re-install and tighten the assembly screws (1251).
5. Mark the activation date on the adhesive label that is provided.

Figure 2 - Activating the Automatic Lubricator

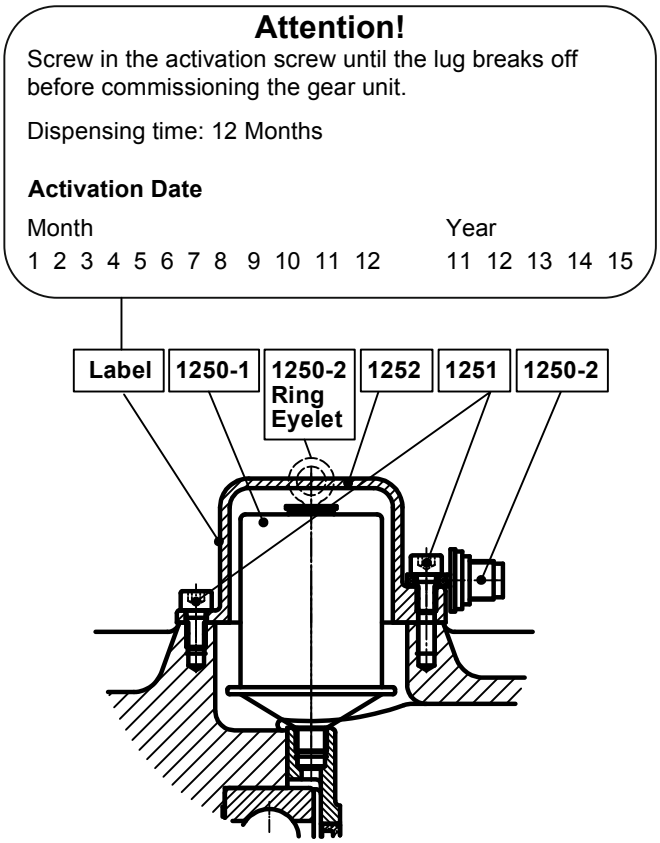

1250-1 Automatic Lubricator
1250-2 Activation Screw
1251 Socket Head Cap Screws
1252 Protective Cover

Grease Purge and Grease Drain Cup

Some versions of the NEMA (or IEC) adapters also include a grease purge and a grease drain cup (1299) for collecting old grease. The grease purge area is sealed for transportation.

It is recommended that the G1/4 sealing screw (1297) be removed and that the grease drain cup be installed after the automatic lubricant dispenser is activated.

The swivel fitting (1242) that NORD supplies allows the grease cup to be positioned at a 90° angle from its typical mounting. The swivel fitting allows the grease cup to be rotated so that it remains clear of any gear unit mounting obstructions.

Figure 3 – Grease Purge and Grease Cup Assembly

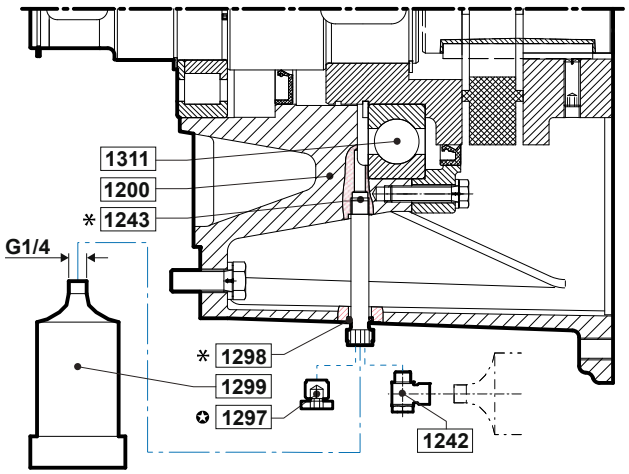

1200 NEMA or IEC Input Cylinder
1242 Swivel Fitting (P/N) 22006359)
1243 Extension*
1297 Screw Plug ✪
1298 Seal Ring*
1299 Grease Drain Cup (P/N 28301210)
1311 Bearing

* Supplied on certain input assembly sizes as needed.

✪ Remove the screw plug to install either the grease drain cup or the swivel fitting with the grease drain cup.

Grease Cup Servicing

NORD suggests that with every second replacement of the automatic lubricator, the grease collection cup (NORD Part No. 28301210) should be emptied or replaced with a new one. Follow the steps below to service the grease cup.

1. Unscrew the grease drain cup (1299) from either the outlet port of the NEMA or IEC input cylinder or from the extension (1243) that is secured to the NEMA or IEC input cylinder.
2. To empty the grease drain cup (1299) insert a stiff rod through the hole in the grey cap-end of the drain cup and push the internal plunger towards the thread-end of the drain cup. Please note that the dark gray end cap is bonded into place and cannot be removed.
3. Collect and properly dispose of the grease being pushed out of the drain cup. Due to the design of the container a residual amount of grease may remain in the container.
4. After emptying and cleaning the grease cup it can be fitted back onto the grease outlet port of the NEMA or IEC adaptor.
5. In the event the grease cup becomes damaged it should be replaced with a new container. Consider replacing the grease cup (P/N 28301210) with every second replacement of the automatic lubricator.

Replacing the Automatic Lubricator

A new automatic lubricator can be ordered from NORD by specifying the appropriate Part Number from the table at the bottom of Page 1 of this manual. Reference Figure 2 and follow the steps below to replace the automatic lubricator.

1. Loosen and remove the M8x16 socket head cap screws (1251) holding the protective cover (1252) in place.
2. Unscrew the automatic lubricator (1250-1) from the bearing cover area of the NEMA or IEC input cylinder.
3. Install the new automatic lubricator and activate per the instructions on page 2.
4. Re-install the protective cover (1252) and the assembly screws (1251).
5. Note the activation date of the newly installed automatic lubricator

NEMA OR IEC INPUT ADAPTER WITH GREASE FITTING

Application

NORD gear units listed in the table below that are supplied with a NEMA 250TC or IEC 160 and larger input adapter, may be supplied with an external grease fitting. The grease fitting allows the user to service the outboard bearing of the reducer's input assembly

Helical Inline	SK62, SK72, SK73, SK82, SK83, SK92, SK93, SK102 and SK103
Parallel-Shaft CLINCHER™	SK6282, SK7282, SK7382, SK8282, SK8382, SK9282, SK9382, SK10282, SK10382, SK11282, SK11382 & SK12382
90.1 Series Helical-Bevel	SK9072.1, SK9082.1, SK9086.1, SK9092.1 & SK9096.1

The grease fitting is an option which must be specified upon ordering, otherwise NORD will normally supply a PERMA Automatic Lubricator (See User Manual U45250).

Factory Supplied Grease

The bearing grease applied at the factory is as follows:

Brand	Mobil, Mobilith SHC220
Thickener	LI-Complex
NLGI Grade	2
Temperature Range	40°C to 120°C (-40°F to 250°F)

IMPORTANT NOTE

It is the user's responsibility to ensure that if replacement grease is used, that it is fully compatible with the factory supplied grease.

Service Instructions

WARNING

- While working on the gear drive system, make sure the power from the prime mover is isolated or secured on "lock-out" to prevent accidental start-up and to safeguard against injury!
- Surfaces of motors and gear units may become hot during operation or shortly after start-up. In some instances additional protection against accidental contact may be necessary. Use caution to avoid burns or serious injury!

1. It is best to re-grease the bearing within a short period after the gear unit was operational because the old grease will be more viscous and will flow easier.
2. Ensure that the grease gun contains the right lubricant for the bearing to be re-greased.
3. Open the protective flip cover and clean the areas around the grease fitting to ensure that contaminants are not introduced into the bearing cavity.
4. Using a grease gun, apply 0.75 ounces (20-25 grams) of compatible bearing grease every 2,500 service hours.

IMPORTANT NOTE

Re-greasing should be carried out while the bearing is still warm from operation and/or while rotating (if it is safe).

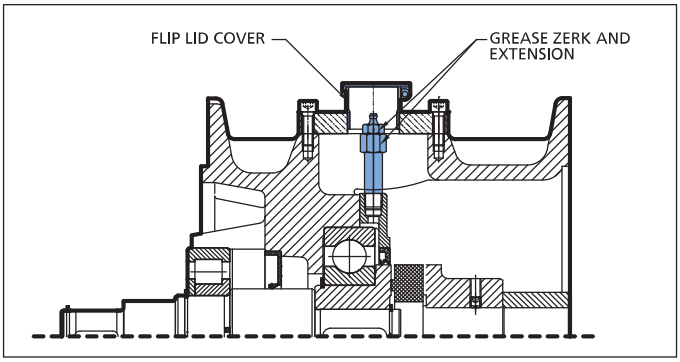

1. Solid Input Shaft (W)

The shaft will be inch or metric, depending on how the unit was ordered. Measure and verify the shaft before mounting anything on the shaft. Below are the tolerances used for the solid shafts.

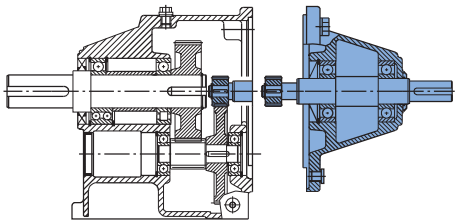

2. Solid shaft diameter tolerance

Reducer input shaft extensions have a diameter tolerance as specified in **Table 1**.

Table 1: Solid Shaft Diameter Tolerance

Above ø (in)	To & Including ø (in)	Tolerance (in)
0.375	1.750	+0.0000 / -0.0005
1.750	2.750	+0.0000 / -0.0010

Above ø (mm)	To & Including ø (mm)	Tolerance (mm)	ISO 286-2 Fit Class
10	18	+0.012 / +0.001	k6
18	30	+0.015 / +0.002	k6
30	50	+0.018 / +0.002	k6
50	70	+0.030 / +0.011	m6

3. Fitting drive elements onto the reducer solid shaft

Solid input shaft extensions are provided with a drill and tap feature as indicated in Table 2. When installing drive elements such as coupling hubs, pulleys, sprockets, or gears, NORD recommends using the threaded hole in the end of the shaft, along with a suitable assembly device fitted into the threaded hole.

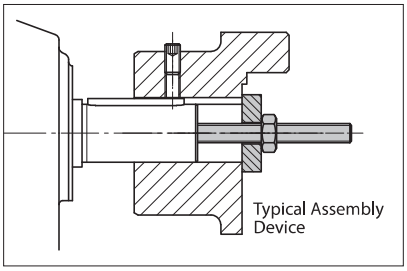

Table 2: Solid Input Shaft End - Threaded Holes

Above ø (in)	To & Including ø (in)	Tap size & Depth (in)
0.375	0.500	10-24 x 0.43 in
0.500	0.875	1/4-20 x 0.59 in
0.875	0.938	5/16-18 x 0.71 in
0.938	1.100	3/8-16 x 0.87 in
1.100	1.300	1/2-13 x 1.10 in
1.300	1.875	5/8-11 x 1.42 in
1.875	2.750	3/4-10 x 1.73 in

Above ø (mm)	To & Including ø (mm)	Tap Size & Depth (mm)
10	13	M4 x 10 mm
13	16	M5 x 12.5 mm
16	21	M6 x 16 mm
21	24	M8 x 19 mm
24	30	M10 x 22 mm
30	38	M12 x 28 mm
38	50	M16 x 36 mm
50	70	M20 x 42 mm

NOTICE

DO NOT DRIVE or **HAMMER** the coupling hub, pulley, sprocket, or gear into place. An endwise blow to the reducer shaft can generate damaging axial forces and cause damage to the reducer housing, bearings or internal components.

⚠ *WARNING*

To avoid serious injury the user must provide suitable safety guards for all rotating shafts and shaft components such as couplings, chain drives, belt drives, etc. All guarding must adhere to local regulations and safety standards.

4. Installing interference-fit hubs to the reducer shaft

Prior to installing any interference-fit hubs to the reducer shaft, consult with the manufacturer to determine proper assembly and fit. Interference-fits usually require heating the coupling, sprocket or gear hub, per the manufacturer's recommendations. Coupling hub installation typically follows ANSI/AGMA 9002-A86. Always make sure the reducer shaft seals are protected from the heat source. Apply uniform heat to the drive element hub to prevent distortion. NORD does not recommend heating the drive element hub beyond 212°F to 275°F (100°C to 135° C).

⚠ WARNING

When using heat to mount a drive element hub, do not use open flame in a combustible atmosphere or near flammable materials. Use suitable protection to avoid burns or serious injury.

IMPORTANT NOTE

When using external chain or belt drives, make sure the reducer is sized so that the shaft and bearings have adequate capacity. To avoid unnecessary bearing loads and additional shaft deflection, mount all power take-off devices (sprockets, pulleys, etc.) so that the applied load center is as close to the gear housing as possible and check component alignment and tension of any belts or chains per the manufacturer's recommendation. Do not over tighten the belts or chains.

5. Coupling installation

The performance and life of any coupling depends upon how well it is installed. Coupling hubs are typically mounted flush with the shaft ends, unless specifically ordered for overhung mounting. Shaft couplings should be installed according to the coupling manufacturer's recommendations for gap, angular and parallel alignment. To help obtain critical shaft alignment coupling hubs may be installed to the machine shafts prior to final shimming or tightening of the foundation bolts. Proper coupling alignment allows for thermal and mechanical shaft movement during operation and ensures that only torque (no radial load) is transmitted between the mating shafts.

Coupling gap and angular alignment

The shaft gap must be sufficient to accommodate any anticipated thermal or mechanical axial movement. When setting the coupling gap, insert a spacer or shim stock equal to the required spacing or gap between the coupling hub faces. Measure the clearance using feeler gauges at 90-degree intervals, to verify the angular alignment.

Parallel (or offset) alignment

Mount a dial indicator to one coupling hub, and rotate this hub, sweeping the outside diameter of the other hub. The parallel or offset misalignment is equal to one-half of the total indicator reading. Another method is to rest a straight edge squarely on the outside diameter of the hubs at 90° intervals and measure any gaps with feeler gauges. The maximum gap measurement is the parallel or offset misalignment.

Check alignment

After both angular and parallel alignments are within specified limits, tighten all foundation bolts securely and re-check critical alignment. If any of the specified limits for alignment are exceeded, realign the coupling.

6. Installing sheaves (pulleys), sprockets and gears

To avoid unnecessary bearing loads and additional shaft deflection, mount all power take-off devices (sprockets, pulleys, gears, etc.) so that the applied load center is as close to the gear housing as possible, as shown in **Figure 2**.

Figure 2: Pully or Sprocket Mounting

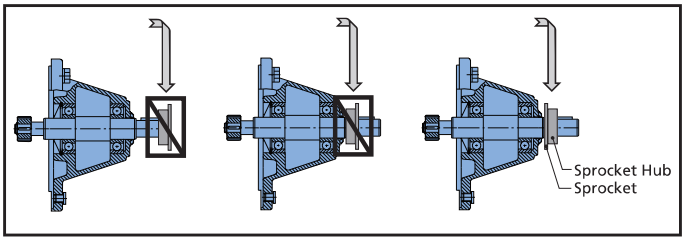

Align the driver sheave or sprocket with the driven sheave or sprocket by placing a straight-edge length-wise across the face of the sheaves or sprockets. Alignment of bushed sheaves and sprockets should be checked only after bushings have been tightened. Check horizontal shaft alignment by placing one leg of a square or a level vertically against the face of the sheave or sprocket.

Always check component alignment and tension any belts or chains per the manufacturer's recommendation. The ideal belt or chain tension allows proper wrap of the driver and driven wheels, while maintaining the lowest possible tension of the belts or chain, so that no slipping occurs under load conditions. Check belt or chain tension frequently over the first 24 to 48 hours of operation.

IMPORTANT NOTE

When using external chain or belt drives, make sure the reducer is sized so that the shaft and bearings have adequate capacity. To avoid unnecessary bearing loads and additional shaft deflection, mount all power take-off devices (sprockets, pulleys, etc.) so that the applied load center is as close the gear housing as possible and check component alignment and tension of any belts or chains per the manufacturer's recommendation. Do not over tension the belts or chains.

7. Service Guidelines for W-Shaft Input with Grease Fitting

On some solid shaft input (Type W) gear units, the outer roller bearing needs to be re-greased at regular service intervals. This is necessary for double-stage gearboxes sizes SK62 or SK6282 and larger, and triple-stage gearboxes from size SK73, SK7382 or SK9072.1 and larger.

To lubricate the bearing of the input shaft, approximately 0.75 to 1.0 ounces (20-25 grams) grease should be added by the grease fitting approximately after every 2,500 hours of service or at least every 6 months. The W-shaft input is factory assembled with the proper amount and type of grease. The type of grease supplied depends upon the type of oil specified at time of order.

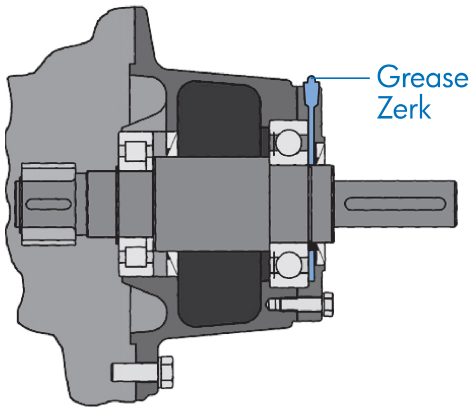

Bearing Grease Options

Reducer Oil Type	NLGI Grade	Grease Thickener	Grease Base Oil	Ambient Temperature Range	Manufacturer Brand/Type
MIN-EP	NLGI 2	Li-Complex	MIN	-30 to 60°C (-22 to 140°F)	Mobil Grease XHP222
PAO	NLGI 2	Li-Complex	PAO	-40 to 80°C (-40 to 176°F)	Mobil / Mobilith SHC 220
FG or FG-PAO	NLGI 2	Polyurea	FG-PAO	-30 to 80°C (-22 to 176°F)	Mobil SHC Polyrex 222

NOTICE

Grease compatibility depends upon the type of thickener or soap complex used, the base oil type suspended within the thickener, and the type of additives used. The user should check with the lubrication supplier before making substitutions in brand and type in order to assure compatibility and to avoid causing damage to the extended bearing.

MOTOR MOUNT PLATFORM (MK)

Motor Mount Platform (MK)

For proper installation of the belt drive, consult the manufacturer. NORD MK motor mounts are adjustable in two ways. Slotted holes are provided at the input cylinder for the initial height adjustment. There are two fine adjustments at the yoke to increase/decrease tension. Two spanner head wrenches will be needed to tighten/loosen the fine adjustments. The four bolts holding the motor platform to the input cylinder must be loosened in order to use the fine adjustments.

The motor mounting platform has tapped holes to accept the foot pattern of the standard footed NEMA or IEC motor. All MK mounting input shaft diameters are metric.

Align the sheaves or sprockets square and parallel by placing a straight edge across their faces. Alignment of bushed sheaves and sprockets should be checked after bushings have been tightened. Check horizontal shaft alignment by placing a level vertically against the face of the sheave or sprocket. Adjust belt or chain tension per the manufacturer's specified procedure. After a period of operation, recheck alignment and adjust as required.

IMPORTANT NOTE

When using external chain or belt drives, make sure the reducer is sized so that the shaft and bearings have adequate capacity. To avoid unnecessary bearing loads and additional shaft deflection, mount all power take-off devices (sprockets, pulleys, etc.) so that the applied load center is as close to the gear housing as possible and check component alignment and tension of any belts or chains per the manufacturer's recommendation. Do not over tighten the belts or chains.

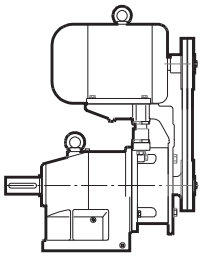

In-Line Unit

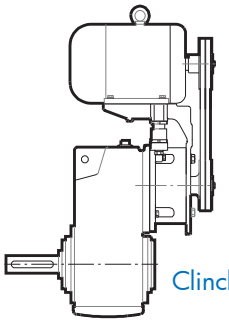

Clincher™ Unit

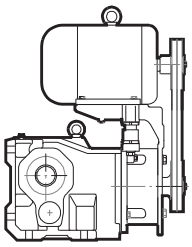

Bevel Unit

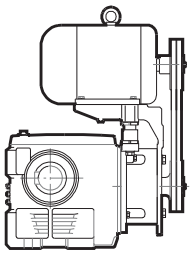

Worm Unit

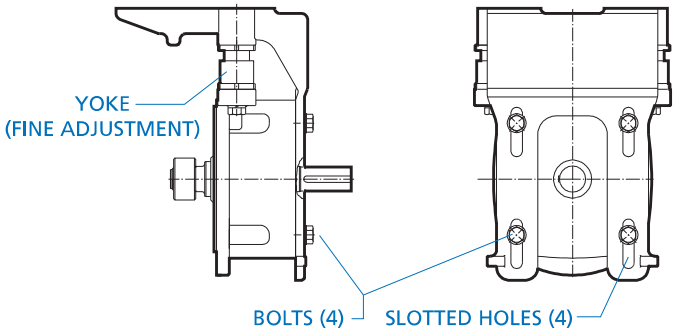

CAUTION

NORD Gear does not furnish the safety guards for the belt drive. It is the responsibility of the customer to install a safety guard to conform to OSHA standards.

NORD Gear Limited
Toll Free in Canada: 800.668.4378

NORD Gear Corporation
Toll Free in the United States: 888.314.6673

Sugar Scoop

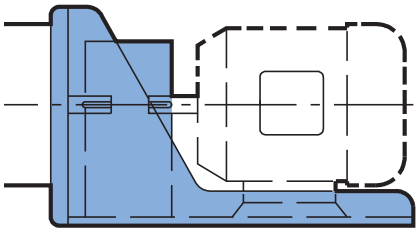

Each scoop bracket includes the coupling for the motor and the coupling guard.

- NORD's standard supplied coupling is the jaw-type coupling with elastomeric spider element.
- The reducer-side (driven) coupling hub is mounted by NORD.
- The motor-side (driver) coupling hub must be mounted by the party responsible for supplying or mounting the motor.
- The supplied coupling guard must be mounted after coupling installation.

Coupling Mounting Instructions

1. Make sure that the motor shaft is clean and free of burrs or defects.
2. Check the motor shaft, coupling hub bores, key and key seat dimensions to make sure they are the proper dimensions.
3. Mount the coupling onto the motor by placing the coupling so that the inside face is flush with the end of the motor shaft and tightening the set screws to hold it in place (Figure 1).

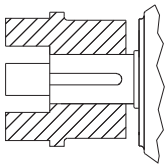

Figure 1. Place coupling flush with end of motor shaft and tighten setscrew.

IMPORTANT NOTE

Heating the coupling hub slightly, up to 176°F (80°C) will help facilitate installation onto the motor shaft.

WARNING

Wear appropriate safety gloves to handle the heated coupling hubs to avoid serious burns or injury.

NOTICE

DO NOT DRIVE or HAMMER coupling hubs into place. An endwise blow to the reducer or motor shaft can generate damaging axial forces and cause damage to the reducer or motor housing, bearings, or internal components.

4. Let the coupling cool down before mounting the spider into the jaws. The spider should not be under axial compression when installed.
5. Place the motor onto the scoop and engage the couplings together. The scoop has slotted holes to help accommodate axial alignment. Secure the motor to the scoop bracket but do not completely tighten the fasteners.

IMPORTANT NOTE

Before tightening the motor to the scoop bracket, the alignment of the coupling must be checked. Shimming of the motor feet may be needed to properly align the couplings. Careful coupling alignment extends the life of not only the coupling but all the components of the drive train.

6. Check the parallel alignment by placing a straight edge or level across the two coupling hubs, and measure the maximum offset at various points around the circumference of the coupling, without rotating the coupling. The maximum parallel alignment should not exceed 0.015 inches (4 mm).
7. Check the angular alignment of the coupling without rotating the hubs. The maximum angular displacement should not exceed 1.0°.
8. After both angular and parallel alignment is within specified limits, tighten all motor mounting hardware to the appropriate torque specification.
9. Re-check the critical alignment and repeat steps 6 and 7 if needed.
10. Mount the coupling guard to the scoop.

CAUTION

It is the customer responsibility to properly guard the rotating shaft and coupling connection and make sure the system meets all local safety regulations.

IMPORTANT NOTE

After a period of operation, it is suggested that the system be checked to make sure coupling alignment is being maintained.

Items included in the touch-up kit

I. No Rinse Alodine® Touch-N-Prep pen.

II. Color matched sealer pen

IMPORTANT NOTE

- Always wear Personal Protective Equipment (PPE), including gloves and safety glasses with side shields.
- When opening individual pens, pull safety caps straight out from pen. Do not twist or torque the cap to avoid damaging the applicator assembly.
- Do not use fingers to prime the applicator tip. Priming takes 15-30 seconds.
- Make sure the surface is clean and dry.

IMPORTANT NOTE

I. Metal temperature must be above 50° F

II. Do not excessively use abrasive pad while removing surface oxidation. Oxidation only needs to be removed from areas with exposed aluminum.

III. Use enough product to wet surface but avoid pooling.

IV. Do not rinse or wipe Alodine coating before the product is allowed to dry.

V. Allow to air dry or use a blow dryer. Do not use a heat gun. Maximum drying temperature is 140°F.

VI. Dry color will appear opaque.

Part I: Allodine® 871 Touch-N-Prep® Pen Instructions

Touch-N-Prep® pens are designed for easy and safe repair of clean, bare, or previously painted aluminum surfaces. It is a non-rinse, dry-in-place application that can be applied using the following steps:

1. Surface Preperation

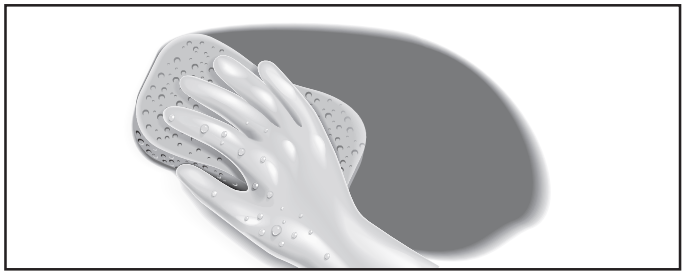

Before applying the coating, the treated surface must be cleaned using the following process:

- If the scratch is more than 24 hours old use a moistened abrasive pad to remove oxides from the surface of the metal.
- Wipe substrate with a damp lint-free cloth to ensure complete removal of soils and dislodged oxides generated from the previous step.
- Allow Surface to dry before Touch-N-Prep® application.

2. Prime Applicator Tip

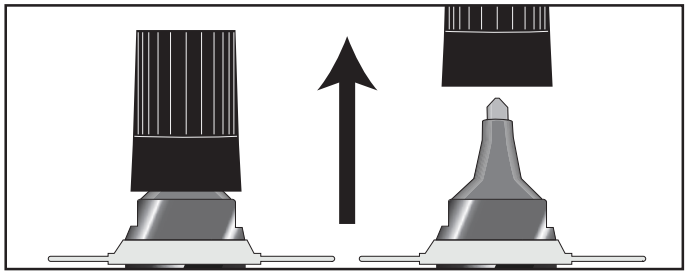

To activate, hold the Touch-N-Prep® pen upright and pop off the cap. Do not twist or turn to remove the cap, since this may result in the pen leaking. Hold the pen tip down onto a clean surface to begin the flow of solution to the tip.

3. Application

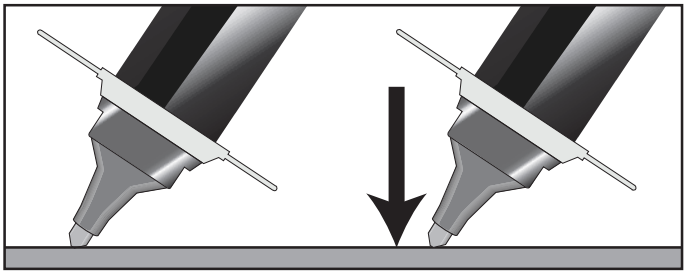

Press the pen tip down on the surface until solution fills the pen tip. Apply the Alodine® 871™ solution to the metal surface with firm, smooth, even strokes, covering all of the edges. Overlap each stroke and allow to dry.

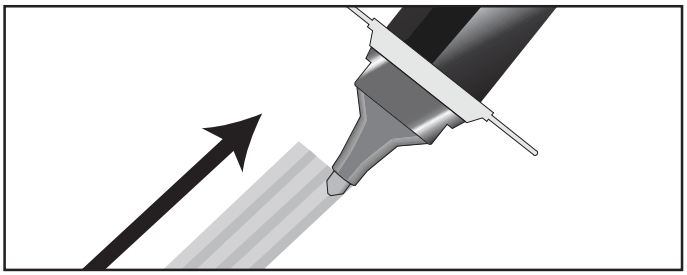

Frequent short jabs to re wet the application rip are preferred to maintain constant coating weights and avoid over-wetting the felt tip.

4. Re-Application

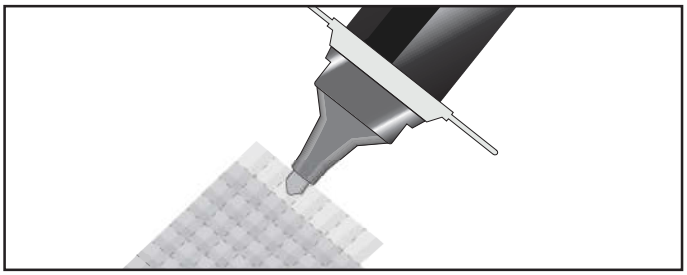

Within 5 minutes of the first coat, apply a second coat at a 90° angle to the first coat with the same smooth, firm stroke.

5. Prepare the Pen for Storage

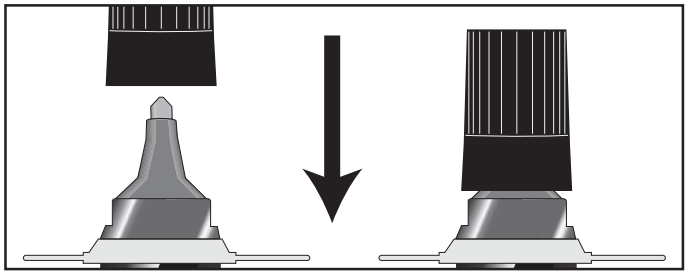

Always immediately replace the cap when not in use to avoid evaporation and contamination.

6. Drying

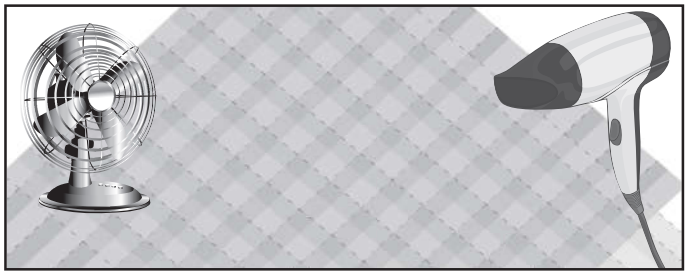

Allow the Alodine Touch-N-Prep® coating to air dry thoroughly.

Part II: Sealer Application

1. Prime Applicator Tip

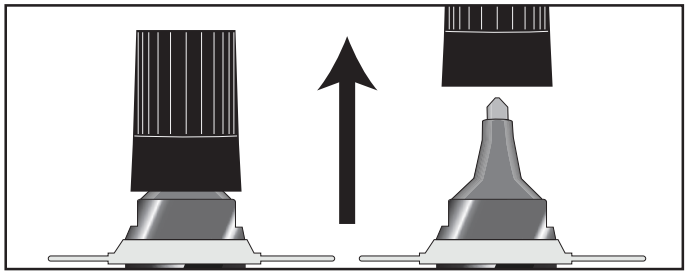

To activate, hold the pen upright and pop off the cap. Do not twist or turn to remove the cap, since this may result in the pen leaking. Hold the pen tip down onto a clean surface to begin the flow of solution to the tip.

2. Application

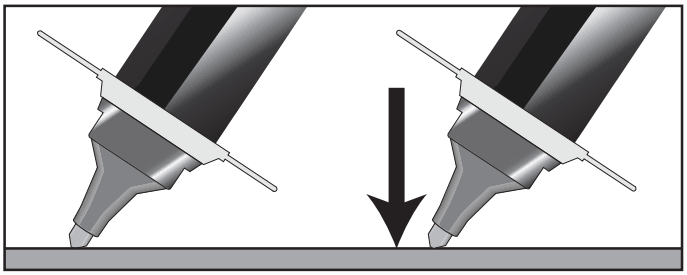

Press the pen tip down on the surface until solution fills the pen tip. Apply the sealer pen solution to the metal surface with firm, smooth, even strokes, covering all of the edges. Overlap each stroke and allow to dry.

3. Prepare the Pen for Storage

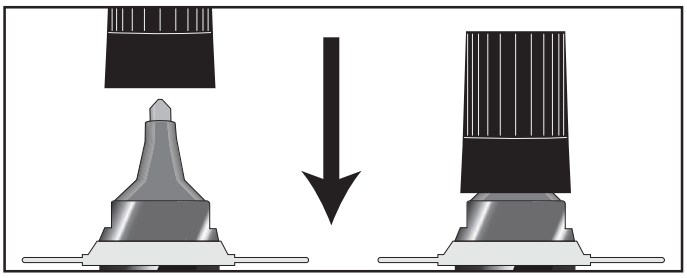

Always immediately replace the cap when not in use to avoid evaporation and contamination.

4. Drying

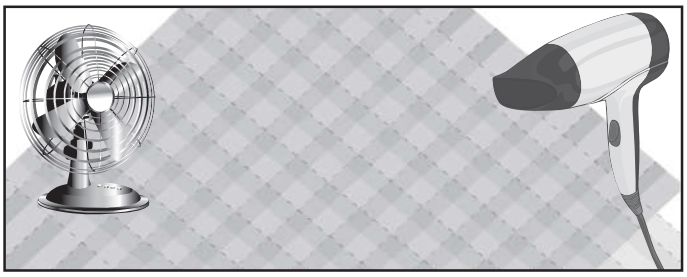

Allow the sealer pen coating to air dry thoroughly.

NORD GEAR CORPORATION

DRIVESYSTEMS — CONDITIONS OF SALE — WWW.NORD.COM

1. CONTRACT

Any contract between Nord Gear Corporation, hereinafter designated as Seller, and the Buyer is subject to the terms and conditions of sale hereinafter set forth. Any deviation from such terms and conditions must be specifically set forth in writing and consented to by Seller. Accordingly, the Buyer and Seller acknowledge and agree that the terms and conditions set forth below and on the face hereof shall govern Buyer's purchase of the goods described on the face hereof and shall take precedence over and represents the final agreement between Buyer and Seller, notwithstanding any inconsistent, contradictory or other prior or further conditions contained in any oral or written request or purchase order issued by Buyer or any other document furnished by Buyer in connection with its purchase of the Goods, regardless of whether such document or documents are exchanged simultaneously with this Invoice or prior or subsequent thereto. Any additional or different terms or conditions which may appear in any communicaiton, oral or written, from Seller, its officers, employees, agents or representatives, are hereby expressly rejected and shall not be effective or binding upon the Seller, unless specifically hereafter agreed to in writing by Seller and no such additional or different terms or conditions in any document submitted to Seller by Buyer shall become part of the contract between Buyer and Seller, unless such written acceptance by Seller specifically recognizes and assents to their inclusion. Any objection by Buyer to the terms and conditions hereof shall be ineffective unless Seller is advised in writing thereof within two (2) days of the date of this Invoice.

2. CONFIRMATION

An order shall be deemed accepted only when duly confirmed by Seller, at Nord Gear Corporation's home office in Waunakee, Wisconsin, and upon such confirmation the order shall become a contract binding upon the parties hereto, their successors and assigns.

3. PRICES

Prices shown are list prices and may be subject to applicable discounts. Unless otherwise agreed upon in writing, prices are FOB factory Waunakee, Wisconsin. Prices and discounts are subject to change without notice until order is accepted. Seller's prices do not include cost of any inspection permits required.

4. LIMITED WARRANTY

Seller hereby warrants that the goods sold hereunder shall be free from material defects in material and workmanship, if properly installed and used under normal operating conditions, for a period of twelve (12) months from the date of installation or eighteen (18) months from date of shipment, whichever comes first (the "Warranty Period"). With respect to gears and housings only, the Warranty Period is extended to thirty-six (36) months from the date of invoice or twenty-four (24) months from the date of installation, whichever comes first. The limited warranty shall not apply to any components or parts which are subject to normal operational wear and tear, including, but not limited to, belts and traction discs. Should any goods fail to comply with the foregoing limited warranty, Buyer shall provide written notice to Seller of the claimed defect and all relevant details within thirty (30) days of Buyer's discovery of the claimed defect. Buyer shall return the allegedly defective goods to Seller at its facilities in Waunakee, Wisconsin or to such other location within the USA as may be designated by Seller in its sole discretion, with all shipping and transportation charges prepaid by Buyer. Seller shall then examine the returned goods to determine if the claimed defect is covered by the limited warranty. If the claimed defect is covered by the limited warranty, Buyer's sole and exclusive remedy shall be to have Seller repair or replace, at Seller's option, the defective goods or components in accordance with the terms of this limited warranty. Seller shall have a commercially reasonable time to make such repairs or replacements and may use new or reconditioned components. Any repair or replacement shall not extend the Warranty Period unless otherwise agreed by Seller. Buyer shall pay all shipping costs and any costs of removal and re-installation of goods or components.

The foregoing limited warranty shall not apply with respect to any goods or components (i) which are not installed, used, operated, serviced or maintained in accordance with manufacturer's instructions or which are otherwise not properly installed, used, operated, serviced or maintained, or (ii) which are misused, neglected, damaged, altered, repaired, reconfigured or incorrectly wired. Seller makes no representations as to the specifications, capacity or performance of the goods sold hereunder, except as may be specifically set forth in the invoice's written specifications, and any such representations are expressly conditioned upon the accuracy and completeness of the data and information furnished by the buyer and upon the goods being properly installed, used, serviced and maintained by Buyer. Any description or model of the goods is for identification or illustrative purposes only and shall not be deemed to create any warranty, express or implied.

THE FOREGOING LIMITED WARRANTY SHALL EXTEND SOLELY TO BUYER AND NOT TO ANY OTHER PARTY. THE FOREGOING LIMITED WARRANTY IS IN LIEU OF ANY AND ALL OTHER WARRANTIES, WHETHER EXPRESS OR IMPLIED. SELLER HEREBY EXCLUDES AND DISCLAIMS ANY AND ALL OTHER WARRANTIES, WHETHER EXPRESS OR IMPLIED, INCLUDING, WITHOUT LIMITATION, ANY IMPLIED WARRANTIES OF MERCHANTABILITY OR FITNESS FOR A PARTICULAR PURPOSE. IF BUYER SHALL FAIL TO PAY WHEN DUE ANY PORTION OF THE PURCHASE PRICE OR ANY OTHER PAYMENT REQUIRED FROM BUYER TO SELLER UNDER THIS CONTRACT, ALL WARRANTIES AND REMEDIES SET FORTH HEREIN SHALL BE DEEMED NULL AND VOID, AB INITIO. THE PARTIES ACKNOWLEDGE AND AGREE THAT THE EXCLUSIVE REMEDY UNDER THE FOREGOING LIMITED WARRANTY SHALL NOT HAVE FAILED OF ITS ESSENTIAL PURPOSE (AS THAT TERM IS USED IN THE UNIFORM COMMERCIAL CODE) PROVIDED THAT SELLER REMAINS WILLING TO REPAIR OR REPLACE DEFECTIVE GOODS WITHIN A COMMERCIALLY REASONABLE TIME. BUYER SPECIFICALLY ACKNOWLEDGES AND AGREES THAT THE PRICE CHARGED BY SELLER FOR THE GOODS IS BASED UPON THE LIMITATIONS OF SELLER'S WARRANTY OBLIGATIONS AND OTHER LIABILITIES AS SET FORTH HEREIN.

LIMITATION OF LIABILITY. NOTWITHSTANDING ANY OTHER PROVISION HEREOF, IN NO EVENT SHALL SELLER BE LIABLE TO BUYER OR TO ANY OTHER PARTY FOR ANY INCIDENTAL, SPECIAL, INDIRECT OR CONSEQUENTIAL DAMAGES, LOST PROFITS, OR FOR ANY LOSSES, CLAIMS OR DAMAGES RELATING TO OR ARISING FROM THE USE OR OPERATION OF THE GOODS, AND IN NO EVENT SHALL ANY CLAIM OR RECOVERY OF ANY KIND EXCEED THE PURCHASE PRICE OF THE GOODS IDENTIFIED IN THE RELATED INVOICE.

5. SHORTAGE AND NONCONFORMITY

Any claim of shortage or that the goods do not conform with the specifications of the order or model must be made in writing within ten (10) days after delivery of the goods (as to which such claim is made) to Buyer or its nominees, but in no event shall the claim be later than within the time limit provided by the carrier or insurance company, otherwise such claim shall be deemed waived. Buyer may not return any goods claimed to be in non-conformity without Seller's prior written authorization. Goods returned without permission will not be accepted, including for credit, and will be returned to Buyer, F.O.B. Seller's plant. Any claim based on the receipt of damaged Goods must be filed with the carrier which delivered the goods. The samples, measurements, dimensions and weights contained in the Seller's catalogs, sales manuals, photographs and drawings constitute only an approximate guide. The Seller reserves the right to make any change which the Seller, in its absolute discretion, considers necessary. While the goods will be delivered principally according to specifications or standards or quantities agreed upon, insignificant deviations or insignificant changes in construction are permissible. The same applies to partial deliveries, In the event that Buyer has a verified claim of shortage or nonconformity of the goods to the specifications of the order or the model, and if such claim has been submitted within the required time limit as set forth above, the Seller shall, at its own expense, make up for the shortage of the goods, or replace or repair the goods, as the case may be, but in no event shall Seller be or become liable to Buyer or to any other person or persons for any loss in damage, direct or indirect, arising out of or caused by such incidents or for the loss of profits, business or good will. The liability of the Seller to Buyer, if any hereunder, for breach of warranty, contract, negligence or otherwise, shall in no event exceed the amount of the purchase price of the goods sold with respect to which any damages are claimed. Shipping dates are estimates unless parties expressly agree on time of the essence.

6. FORCE MAJEURE

The obligation of the Seller shall be modified or excused, as the case may be, for reasons of Acts of God, war, governmental law regulations, strikes or lock-outs, fire, breakdown of machinery, whether in its own business enterprise, or if for any other cause beyond Seller's control, the goods cannot be delivered or their delivery becomes delayed in whole or in part. In the above instances time for delivery shall be extended for the period of the delay caused, with the proviso, however, that either party may cancel in writing the undelivered portion of the order or contract if the delay exceeds six (6) months from the delivery date originally confirmed by Seller. In no event shall Seller become liable in the aforesaid instances to Buyer or any third party for consequential damages or business loss.

7. SHIPMENT AS UNIT

Each shipment by Seller shall be treated as a separate and distinct unit with respect, but only with respect to forwarding, terms of payment, and the making of claims by the Buyer: provided, however, that if the Buyer defaults in the payment of any obligation to Seller or any installments thereof, under any agreement between Buyer and Seller, or if Buyer refuses to accept any goods when tendered for delivery, the Seller may, on fifteen (15) days written notice to the Buyer, without prejudice to Seller's other lawful remedies, either defer further performance until the defaulted payments are made in full, or make future deliveries for cash in advance only, or treat the entire contract or contracts with Buyer as breached by the Buyer and pursue its remedies for breach.

8. BUYER'S REFUSAL OF DELIVERY

If Buyer refuses to accept delivery of any goods tendered for delivery, then Seller, without prejudice to Seller's other lawful remedies, may either store or cause such goods to be stored in a warehouse, for buyer's account and at Buyer's cost, risk and expense, or sell such goods (without notice) to any purchases at public or private sale, and hold the Buyer liable for any difference between (a) the contract price of the goods, and (b) the price at which goods are resold less the costs and expense of such resale including brokerage commissions, or restocking charges.

9. GOODS IN TRANSIT

If prior to delivery or while the goods are in transit, Buyer or Seller becomes bankrupt or insolvent, or any petition in bankruptcy or for the reorganization or for a state court receivership is filed against Buyer or Seller, as the case may be, then the other party hereto may forthwith terminate this contract by giving written notice of such termination. Such termination shall not affect any claim for damages available to the Buyer, provided that if Buyer is then indebted to Seller, the amount of any such damage claim shall be abated to the extent that the indebtedness of Buyer to Seller, as actually paid in money, is abated by any order of judgement entered or any plan adopted in any bankruptcy, reorganization, receivership, or similar proceeding. Such termination shall not prejudice the Seller's rights to any amounts then due under the contract. If Buyer becomes bankrupt or insolvent or any petition in bankruptcy or for reorganizing or if a state court receivership is filed against Buyer, then, at its option Seller may take possession of any goods theretofore sold to Buyer, in connection with which the full purchase price has not been paid, analogous to the terms and provisions set forth in Paragraphs 11 and 12 hereinafter.

10. DELIVERY

(a) Any indicated dates of delivery are approximate only, but NORD Gear will attempt to meet them whenever possible. (b) NORD Gear will not be liable for any penalty clausess contained in any specifications or order submitted unless agreed to in writing by an authorized officer of NORD Gear Corporation. (c) Unless otherwise agreed, delivery of the goods to any carrier shall constitute delivery to the Buyer, and thereafter the risk of loss or damage to the goods shall be upon the Buyer. (d) If the Buyer does not give delivery instructions to the Seller at least (10) days prior to the delivery date ex factory confirmed by the Seller, the Seller may deliver the goods to a carrier of its own choosing, at Buyer's cost and risk, or, at Seller's option, may store the goods on the pier or any warehouse, at Buyer's cost and risk. Any purchase price in such event becomes due and payable within ten (10) days of such storage.

11. PAYMENT OF PURCHASE PRICE

Time of payment is of the essence under the contract. Unless otherwise provided, terms of payment are 30 days net from the date of invoice with a 1% discount if paid within 10 days of date of invoice. Upon default in any of the terms of the contract, or failure to comply with any of the conditions thereof, or upon seizure of the property under execution or other legal process, or if the Buyer becomes bankrupt or insolvent, or any petition for reorganization or for a state court receivership is filed against Buyer, or if the Buyer makes any assignment for the benefit of it's creditors or otherwise sells, encumbers or disposes of the goods, or if for any other reason the Seller should deem itself insecure, the full amount of the purchase price then remaining unpaid shall at once become due and payable at the option of the Seller.

12. BUYER'S DEFAULT

Upon the Buyer's default, the Seller may dispose of the merchandise in any manner that it deems fit and, if it desires to resell same, may do so at private or public sale, with or without notice, and with or without the property being at the place of sale, subject, however, to applicable laws. The Seller or its assigns shall have the right to bid at such sale and may become the purchaser of the property. The proceeds of the sale shall first be applied to the expenses incurred in retaking, repairing, storing and selling the goods, reasonable attorney's fees included, and then shall be applied to the payment of the balance due under the contract. Any surplus amount shall be paid to the Buyer. If a deficiency results after the resale, the Buyer agrees to pay such forthwith, together with reasonable attorney's fees, for the recovery of the goods incurred by the Seller. If upon the Buyer's default, the Seller elects not to resell any goods which it may repossess, then the cost of repossession, including reasonable attorney's fees, shall forthwith be due and payable from Buyer to Seller. Buyer agrees to pay all reasonable costs and reasonable attorneys' fees incurred by Seller in enforcing Seller's rights against Buyer, including Seller's right to payment of the purchase price of the goods and Buyer's payment of all other amounts owing to Seller required under this Invoice and Conditions of Sale.

13. SECURITY INTEREST AND TITLE

In states and localities which are governed by the Uniform Commercial Code, this contract shall serve as security agreement, reserving in Seller a security interest until full payment of purchase price. The provisions of the Uniform Commercial Code regarding security interest shall have preference and apply if inconsistent with other terms of the conditions of sale. In states and localities where the Uniform Commercial Code does not apply, title to the goods shall remain in the Seller or its assigns until full payment of the purchase price. Buyer agrees to execute forthwith any and all documents in such a way and form as Seller may need for filing or recording the security interest under the Uniform Commercial Code with the proper registers or offices, or for filing or recording the conditional sales contract.

14. SALES AND USE TAX

Buyer agrees to bear and pay any sales or use tax in connection with the purchase herein, and to hold the Seller harmless from payment. At the option the Seller, Buyer shall give evidence of payment or of exemption certificate.

15. INSURANCE

The Buyer shall keep the goods insured against damage by fire, water or other casualty as required by Seller, with a company acceptable to Seller, with loss payable to Seller for the total purchase price until the Seller is fully paid. Seller, if it so elects, may place said insurance at Buyer's expense; Seller may cancel such insurance at any time and without notice and may receive the return premium, if any.

16. MODIFICATION BY SELLER

Any contract may be assigned or transferred by the Seller, or the time for the making of any payment due by Buyer may be extended by Seller without derogation of any of the rights of the Seller or its assigns. Waiver by any party of any default shall not be deemed a waiver of any subsequent default.

17. RETURNED GOODS

No goods will be accepted for return unless authorized in writing by Seller. In all cases, transportation and restocking charges will be borne by Buyer.

18. PACKING

The Buyer will be charged for export packaging or other special packing desired. Cost for cartage to ship or transfer express will be added to the invoice. No credit will be allowed if no packing is required.

19. CHANGES/CANCELLATION

NORD Gear will not accept changes in specifications to a confirmed order unless such changes are requested in writing and confirmed back in writing. In addition, the purchaser must to agree to any additional charges that may arise from the change. Placing orders on hold or cancellation of orders require Seller's written approval, and are subject to cancellation and/or restocking charges.

20. BUYER'S RESPONSIBILITY AS TO MAINTENANCE

Buyer shall use and shall require its employees and agents to use all safety devices and guards and shall maintain the same in proper working order. Buyer shall use and require its employees and agents to use safe operation procedures in operating the equipment and shall further obey and have its employees and agents obey safety instructions given by Seller. If Buyer fails to meet the obligations herein, Buyer agrees to defend, indemnify and save Seller harmless from any liability or obligation with regard to any personal injuries or property damages directly or indirectly connected with the operation of the equipment. Buyer further agrees to notify Seller promptly and in any event not later than ten (10) days after notice or knowledge of any accident or malfunction involving Seller's equipment which has caused personal injury or property damages and to cooperate fully with Seller in investigating and determining the causes of such accident and malfunction. In the event that Buyer fails to give such notice to Seller or to cooperate with Seller, Buyer shall be obligated to defend, indemnify and save Seller harmless from any such claims arising from such accident.

21. MISCELLANEOUS PROVISIONS

(a) If for any reason a provision of a contract is legally invalid, then in such event the rest of the contract shall remain in full force and affect, except that the parties shall try to replace such invalid provision closest to their original mutual intentions. (b) This Invoice and these Conditions of Sale constitute the entire agreement between the parties regarding the subject matter hereof and supercedes all prior agreements, understandings and statements, whether oral or written, regarding such subject matter. No modification to, change in or departure from, the provisions of this Invoice and Conditions of Sale shall be valid or binding on Seller, unless approved in writing by Seller. No course of dealing or usage of trade shall be applicable unless expressly incorporated into this Invoice and Conditions of Sale. Any amendments to any contract or contracts between the parties shall be valid only upon the written consent of both parties.

22. NON ASSIGNMENT BY BUYER

Contract or contracts may not be assigned by the Buyer without prior written consent of the Seller.

23. APPLICABLE LAW AND VENUE

All contracts and their interpretation are governed by the applicable, substantive laws of the State of Wisconsin. Any litigation brought by the Buyer regarding this Invoice or goods purchased hereunder may only be brought in the Circuit Court for Dane County, Wisconsin.

NORD GEAR LIMITED

DRIVESYSTEMS — TERMS & CONDITIONS OF SALE — WWW.NORD.COM

1. CONTRACT
Any contract between Nord Gear Limited, hereinafter designated as "Seller", and the party or parties accepting these terms and conditions of sale and any agent, officer, servant, employee or subcontractor of such party or parties, hereinafter designated as "Buyer", is subject to the terms and conditions of sale hereinafter set forth. Any deviation from such terms and conditions must be specifically set forth in writing and consented to by Seller.

2. CONFIRMATION
An order shall be deemed accepted only when duly confirmed by Seller, at Nord Gear Limited's home office in Brampton, Ontario, and upon such confirmation the orders shall become a contract binding upon the parties hereto, their successors and assigns.

3. PRICES
Prices shown are list prices and may be subject to applicable discounts. Unless otherwise agreed upon in writing, prices are FOB factory Brampton, Ontario. Prices and discounts are subject to change without notice until the order is accepted. Seller's prices do not include cost of any inspection permits required.

4. LIMITED WARRANTY
Seller warrants the goods sold hereunder to be free from defects in material and workmanship under normal use and service not arising from misuse, negligence, or accident, including but not limited to the use, installation, and transportation of the goods by Buyer, its agents, servants, employees, or by carriers. This warranty shall pertain to any part or parts of any goods to which Buyer or its assigns has within one year from date of delivery given written notice of claimed defects to Seller. Buyer shall be required to furnish Seller with details of such defects and this warranty shall be effective as to such goods which Seller's examination shall disclose to its satisfaction to have been defective and which at Seller's option shall promptly thereafter be returned to Seller or its nominees. EXCEPT FOR THE EXPRESS WARRANTIES SET FORTH ABOVE, SELLER HAS MADE NO WARRANTIES, EXPRESS, IMPLIED OR STATUTORY, AS TO THE GOODS SOLD HEREUNDER, INCLUDING, BUT NOT LIMITED TO THEIR MERCHANTABILITY OR FITNESS FOR ANY PARTICULAR PURPOSE. ANY DESCRIPTION OR MODEL OF THE GOODS IS FOR IDENTIFICATION OR ILLUSTRATIVE PURPOSES ONLY AND SHALL NOT BE DEEMED TO CREATE AN EXPRESS WARRANTY. The Buyer's exclusive remedy for claims arising from defective or nonconforming goods shall be limited to the repair or replacement thereof at the Seller's sole option. THE SELLER SHALL NOT BE RESPONSIBLE OR LIABLE FOR CONSEQUENTIAL DAMAGES ARISING OUT OF OR IN CONNECTION WITH THE SALE, DELIVERY, USE, PERFORMANCE, OR SERVICE OF THE GOODS SOLD UNDER THIS AGREEMENT. SELLER SHALL NOT BE LIABLE FOR ANY LOST PROFITS OR FOR ANY CLAIM OR DEMAND AGAINST SELLER BY ANY PARTY. IN NO EVENT WILL SELLER BE LIABLE FOR SPECIAL, INDIRECT OR CONSEQUENTIAL DAMAGES, EVEN IF SELLER HAS BEEN ADVISED OF THE POSSIBILITY OF SUCH DAMAGES. SELLER'S AGGREGATE LIABILITY FOR DAMAGES UNDER THIS AGREEMENT, WHETHER ARISING FROM OR BASED UPON BREACH OF WARRANTY, BREACH OF CONTRACT, TORT OR OTHER CAUSE OF ACTION, SHALL IN NO CASE EXCEED THE PURCHASE PRICE THAT BUYER PAYS FOR THE PARTICULAR GOODS INVOLVED. Seller shall in no event be liable to any person or firm (including any assignee or Buyer) except Buyer and its successors. Unless specifically authorized by Seller in writing, Seller shall not become responsible for any repair work done by Buyer or any other party on any goods sold. Any costs of the return of such goods to Seller shall be borne by Buyer. Goods sold but not manufactured by Seller are being warranted as to defects in material and workmanship consistent with the limited warranty policy of the original manufacturer of the goods and if there is not such a limited warranty policy, the warranty shall be limited to the provisions of Article 4 herein. Standards for the operating characteristics of the gearboxes and the gear motors are in conformity with Seller's tests. THIS WARRANTY IS IN LIEU OF ALL OTHER EXPRESS OR IMPLIED WARRANTIES, INCLUDING ANY IMPLIED WARRANTY OF MERCHANTABILITY OR FITNESS FOR ANY PARTICULAR PURPOSE SELLER DOES NOT ASSUME, NOR DOES IT AUTHORIZE ANY PERSON TO ASSUME, ON ITS BEHALF, ANY OTHER OBLIGATION OR LIABILITY.

5. SHORTAGE AND NONCONFORMITY
Any claim of shortage or that the goods do not conform with the specifications of the order or model must be made in writing within ten (10) days after delivery of the goods (as to which such claim is made) to Buyer or its nominees, but in no event shall the claim be later than within the time limit provided by the carrier or insurance company, otherwise such claim shall be deemed waived. The samples, measurements, dimensions and weights contained in Seller's catalogs, sales manuals, photographs and drawings constitute only an approximate guide. Seller reserves the right to make any changes which Seller, in its absolute discretion, considers necessary. While the goods will be delivered principally according to specifications of standards or quantities agreed upon, insignificant deviations or insignificant changes in construction are permissible. The same applies to partial deliveries. In the event that Buyer has a verified claim of shortage or nonconformity of the goods to the specifications of the order or the model, and if such claim has been submitted within the required time limit as set forth above, Seller shall, at its own expense, make up for the shortage of the goods, or replace or repair the goods, as the cause may be, but in no event shall Seller be or become liable to Buyer or to any other person or persons for any loss in damage, direct or indirect, arising out of or caused by such incidents or for the loss of profits, business of good will. Shipping dates are estimates unless parties expressly agree on time of the essence.

6. FORCE MAJEURE
The obligation of Seller shall be modified or excused, as the case may be, for reasons of Acts of God, war, governmental law regulations, strikes or lock-outs, fire, breakdown of machinery, whether in its own business enterprise, or if for any other cause beyond Seller's control, the goods cannot be delivered or their delivery becomes delayed in whole or in part. In the above instances time for delivery shall be extended for the period of the delay caused, with the proviso, however, that either party may cancel in writing the undelivered portion of the order of contract if the delay exceeds six (6) months from the delivery date originally confirmed by Seller. In no event shall Seller become liable in the aforesaid instances to Buyer or any third party for consequential damages or business loss.

7. SHIPMENT AS UNIT
Each shipment by Seller shall be treated as a separate and distinct unit with respect, but only with respect to forwarding, terms of payment, and the making of claims by Buyer; provided, however, that if Buyer defaults in the payment of any obligation to Seller or any installments thereof, under any agreement between Buyer and Seller, or if Buyer refuses to accept any goods when tendered for delivery, Seller may, on fifteen (15) days written notice to Buyer, without prejudice to Seller's other lawful remedies, either defer further performance until the defaulted payments are made in full, or make future deliveries for cash in advance only, or to treat the entire contract or contracts with Buyer as breached by Buyer and pursue its remedies for breach.

8. BUYER'S REFUSAL OF D ELIVERY
If Buyer refuses to accept delivery of any goods tendered for delivery, then Seller, without prejudice to Seller's other lawful remedies, may either store or cause such goods to be stored in a warehouse, for Buyer's account and at Buyer's cost, risk and expense, or sell such goods (without notice) to any purchaser at public or private sale, and hold Buyer liable for any difference between (A) the contract price of the goods, and (B) the price at which goods are resold less the costs and expense of such resale including brokerage commissions, or restocking charges.

9. GOODS IN TRANSIT
If prior to delivery or while the goods are in transit, Buyer or Seller becomes bankrupt or insolvent, or any petition in bankruptcy or for the reorganization or for appointment of a receiver is filed against Buyer or Seller, as the case may be, then the other party hereto may forthwith terminate this contract by giving written notice of such termination. Such termination shall not affect any claim for damages available to Buyer, to Seller, as actually paid in money, is abated by any order of judgment entered or any plan adopted in any bankruptcy, reorganization, receivership, or similar proceeding. Such termination shall not prejudice Seller's rights to any amounts then due under the contract. If Buyer becomes bankrupt or insolvent or any petition in bankruptcy or for reorganization or if a state court receivership is filed against Buyer, then, at its option, Seller may take possession of any goods theretofore sold to Buyer, in connection with which the full purchase price has not been paid, analogous to the terms and provisions set forth in Paragraphs 11 and 12 hereinafter.

10.DELIVERY
(A)Unless otherwise agreed, delivery of the goods to any carrier shall constitute delivery to Buyer, and thereafter the risk of loss or damage to the goods shall be upon Buyer. (B) If Buyer does not give delivery instructions to Seller at least ten (10) days prior to the delivery date ex factory confirmed by Seller, Seller may deliver the goods to a carrier of its own choosing, at Buyer's cost and risk, or, at Seller's option may store the goods on the pier or on any warehouse at Buyer's cost and risk. Any purchase price in such event becomes due and payable within ten (10) days of such storage.

11. PAYMENT OF PURCHASE PRICE
Time of payment is of the essence under the contract. Upon default in any of the terms of the contract, or failure to comply with any of the conditions thereof, or upon seizure of the property under execution or other legal process, or if Buyer becomes bankrupt or insolvent, or any petitions for reorganization or for appointment of a receiver is filed against Buyer, or if Buyer makes any assignment for the benefit of its creditors or otherwise sells, encumbers or disposes of the goods, or if for any other reason Seller should deem itself insecure, the full amount of the purchase price then remaining unpaid shall at once become due and payable at the option of Seller. Interest on the delinquent payment from the due date thereof until paid shall be at a rate of two (2%) percent per month.

12. BUYER'S DEFAULT
Upon Buyer's default, Seller may dispose of the merchandise in any manner that it deems fit and, if it desires to resell same, may do so at private or public sale, with or without notice, and with or without the property being at the place of sale, subject, however, to applicable laws. Seller or its assigns shall have the right to bid at such sale and may become the purchaser of the property. The proceeds of the sale shall first be applied to the expenses incurred in retaking, repairing, storing and selling the goods; reasonable solicitor's fees included, and then shall be applied to the payment of the balance due under the contract. Any surplus amount shall be paid to Buyer. If a deficiency results after the sale, Buyer agrees to pay such forthwith, together with reasonable solicitor's fees, for the recovery of the goods incurred by Seller. If upon Buyer's default, Seller elects not to resell any goods which it may repossess, then the cost of repossession, including reasonable solicitor's fees, shall forthwith be due and payable from Buyer to Seller.

13. SECURITY INTEREST AND TITLE
In provinces which are governed by a Personal Property Security Act, this contract shall serve as a security agreement, reserving in Seller a security interest until full payment of the purchase price. The provisions of the Personal Property Security Act regarding security interest shall have preference and apply if inconsistent with other terms of the conditions of sale herein. In provinces where a Personal Property Security Act does not apply, title to the goods shall remain in the Seller or its assigns until full payment of the purchase price. Buyer agrees to execute forthwith any and all documents in such a way and form as Seller may need for filing or recording the security interest under a Personal Property Security Act with the proper registers or offices, or for filing or recording the Conditional Sales Contract herein.

14. SALES AND USE TAX
Seller's prices do not include sales, use, excise or other taxes payable to any governmental authority in respect of the sale of Seller's goods. Buyer shall pay, in addition to Seller's price, the amount of any such taxes or shall reimburse Seller for the amount thereof that Seller may be required to pay. At the option of Seller, Buyer shall give evidence of payment or of exemption certificate.

15. INSURANCE
Buyer shall keep the goods insured against damage by fire, water or other casualty as required by Seller, with a company acceptable to Seller, with loss payable to Seller for the total purchase price until Seller is fully paid. Seller, if it so elects, may place said insurance at Buyer's expense; Seller may cancel such insurance at any time and without notice and may receive the return premium, if any.

16. MODIFICATION BY SELLER
Any contract may be assigned or transferred by Seller, or the time for the making of any payment due by Buyer may be extended by Seller without derogation of any of the rights of Seller or its assigns. Waiver by any party of any default shall not be deemed a waiver of any subsequent default.

17. RETURNED GOODS
No goods will be accepted for return unless authorized in writing by Seller. In all cases, transportation and restocking charges will be borne by Buyer.

18. PACKING
Seller does not charge for standard packaging for domestic shipment. Buyer will be charged, however, for export packaging or other special packing desired. Cost for cartage to ship or transfer express will be added to the invoice. No credit will be allowed if no packing is required.

19. EXPORT ORDER
Export orders are to be accompanied by a confirmed irrevocable Letter of Credit in Seller's favor, in Canadian currency, with an accredited Canadian bank, subject to Seller's draft, with shipping documents attached.

20. CANCELLATION
Placing orders on hold or cancellation of orders require Seller's written approval, and are subject to cancellation and/or restocking charges.

21. BUYER'S RESPONSIBILITY AS TO MAINTENANCE
Buyer shall use and shall require its employees and agents to use all safety devices and guards and shall maintain the same in proper working order. Buyer shall use and require its employees and agents to use safe operating procedures in operating the equipment and shall further obey and have its employees and agents obey safety instructions given by Seller. If Buyer fails to meet the obligations herein, Buyer agrees to indemnify and save Seller harmless from any liability or obligation with regard to any personal injuries or property damages directly or indirectly connected with the operation of the equipment. Buyer further agrees to notify Seller promptly and in any event not later than ten (10) days after notice or knowledge of any accident or malfunction involving Seller's equipment which has caused personal injury or property damages and to cooperate fully with Seller in investigating and determining the causes of such accident and malfunction. In the event that Buyer fails to give such notice to Seller or to cooperate with Seller, Buyer shall be obligated to indemnify and save Seller harmless from any such claims arising from such accident.

22. MISCELLANOUS PROVISIONS
(A)If for any reason a provision of a contract is legally invalid, then in such event the rest of the contract shall remain in full force and affect, except that the parties shall try to replace such invalid provision with a provision closest to their original mutual intentions. (B) Any amendments to any contract or contracts require the consent in writing by both parties. Headings in this document are for ease of reference only.

23. NON ASSIGNMENT BY BUYER
Contract or contracts may not be assigned by Buyer without prior written consent of Seller.

24. APPLICABLE LAW
This agreement shall be governed by the laws of the Province of Ontario and the applicable laws of Canada. Buyer and Seller agree that any judicial proceeding with respect to this agreement must be brought and maintained in the City of Toronto, In the Province of Ontario.

25.
This instrument sets forth the entire understanding and agreement of the parties hereto in respect of the subject matter hereof, and all prior undertaking between the parties hereto, together with all representations and obligations of such parties in respect of such subject matter, shall be superseded by and merged into this instrument.

26.
The provisions of this agreement shall bind and ensure to the benefit of the parties hereto and their respective heirs, executors, administrators, successors and (subject to any restrictions or assignment herein above set forth) assigns, as the case may be.

27.
The parties acknowledge that they have requested this document and all notices or other documents relating thereto be drafted in the English language.

Les parties reconnaissent qu'ils ont requis que ce contrat et tous les avis ou autres documents qui s'y rapportent soient rédiges en langue anglaise.

"Terms and Conditions in French available upon request."

NORD DRIVESYSTEMS

Product Literature

Gear Units



DuoDrive Integrated Gear Motor
Catalog: G5010
Flyer: S5010



Helical Inline
Catalog: G1000



NORDBLOC.1® Helical Inline
Catalog: G1013



CLINCHER™ Parallel Shaft
Catalog: G1020



Screw Conveyor Package (SCP)
Catalog: G1129



Overhead Conveyor Drives
Catalog: G1043



2-Stage Right Angle Helical Bevel
Catalog: G1014



Right Angle Helical Bevel
Catalog: G1000

Worm Gear Units



FLEXBLOC® Worm - SI
Catalog: G1035
Flyer: F1033



MINICASE™ Worm - SMI
Catalog: G1035
Flyer: F1033



Right Angle Helical Worm
Catalog: G1000

Industrial Gear Units



MAXXDRIVE® Industrial Gear Units (Parallel, Right Angle)
Catalog: G1050
Flyer: F1050



MAXXDRIVE® XT Industrial Gear Units (Parallel)
Catalog: TI60-0011
Flyer: S1055

Motors & Brakemotors



VFD/AC Vector Duty Motors
Catalog: M7000



IE4/IE5+ Premium Efficiency Motors
Catalog: M5000
Flyer: S9012



Smooth Body Motors
Catalog: M7010

Variable Frequency Drives



NORDAC® *START* Motor Starter - SK 135E
Catalog: E3000
Flyer: F3015



NORDAC® *BASE* VFD - SK 180E
Catalog: E3000
Flyer: F3018



NORDAC® *FLEX* VFD - SK 200E
Catalog: E3000
Flyer: F3020



NORDAC® *LINK* VFD & Motor Starters
Catalog: E3000
Flyer: F3025



NORDAC® *PRO* Cabinet VFD - SK 500E
Catalog: E3000
Flyer: F3050



NORDAC® *PRO* Decentralized VFD - SK 500P
Catalog: E3000
Flyer: F3060



NORDAC® *ON/ON+* Decentralized VFD
Catalog: E3000
Flyer: S9013

DRIVESYSTEMS

Our customer-first approach means we take extra care to support our customers throughout the entire buying process and beyond. In addition to phone support, we offer myNORD online customer tools where customers can select, order, and track their products 24/7.



NORD is also ready to support you in the event of a breakdown, whether the product is ours or not. We can quickly provide you with replacement parts, components, or complete units to get you back up and running fast. NORD 365-day breakdown support includes:

- Immediate live support to get your replacement product within hours
- Basic troubleshooting and customer support
- Ordering of spare parts, components, or replacement units
- Competitor interchange - use our myNORD online configuration tool to specify a comparable NORD unit, call us and we can assemble and ship it to you in as little as 24 hours





Order spare parts quickly and conveniently with our online Parts Shop!

Ordering is Easy With myNORD Online Tools!

- Obtain drawing files direct from quote configuration
- Effortlessly select & configure customized drive solutions
- Create quotes with account-specific net pricing
- Order-specific documentation
- 24/7/365 order tracking
- Select and order spare parts

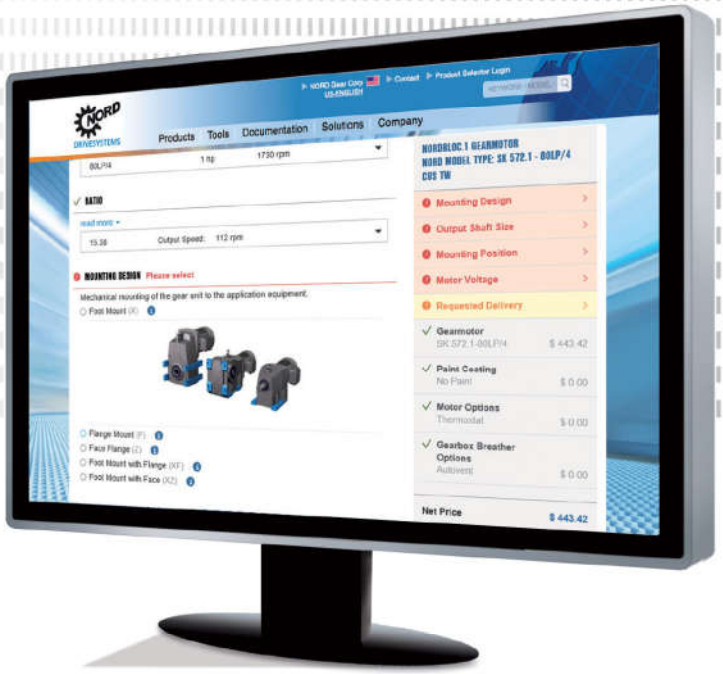

Register now at myNORD.com!

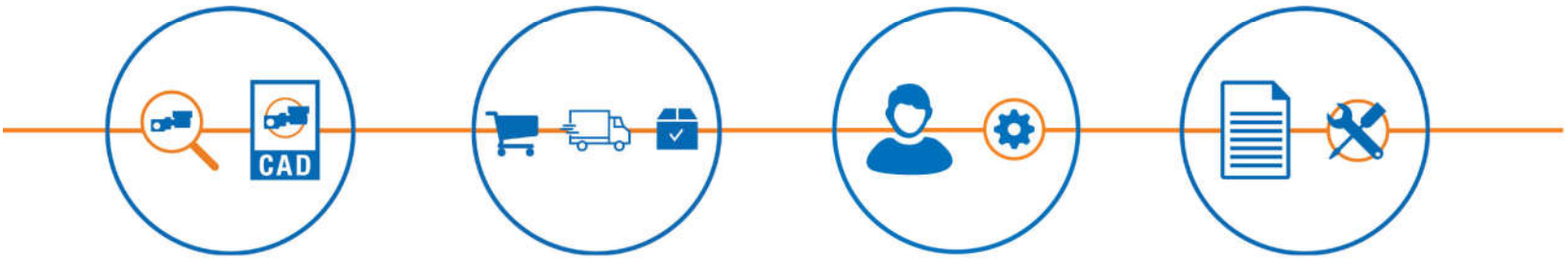

NORD Gear Corporation - US

Waunakee, WI
800 NORD Drive
Waunakee, WI 53597
T: 888 314 6673
info.us@nord.com

Corona, CA
1180 Railroad St.
Corona, CA 92882
Tel. 888.314.6673
info.us@nord.com

Charlotte, NC
300 Forsyth Hall Dr.
Charlotte, NC 28273
Tel. 888.314.6673
info.us@nord.com

NORD Gear Limited - Canada

Brampton, ON
41 West Drive
Brampton, ON L6T4A1
T: 800 668 4378
info.ca@nord.com

INSTALLATION, OPERATION AND MAINTENANCE MANUAL OF ELECTRIC MOTORS

This manual provides information about WEG induction motors fitted with squirrel cage, permanent magnet or hybrid rotors, low, medium and high voltage, in frame sizes IEC 56 to 630 and NEMA 42 to 9606/10.
The motor lines indicated below have additional information that can be checked in their respective manuals:

- Smoke Extraction Motors;
- Electromagnetic Brake Motors;
- Hazardous Area Motors.

These motors meet the following standards, if applicable:

- NBR 17094-1: Máquinas Elétricas Girantes - Motores de Indução - Parte 1: trifásicos.
- NBR 17094-2: Máquinas Elétricas Girantes - Motores de Indução - Parte 2: monofásicos.
- IEC 60034-1: Rotating Electrical Machines - Part 1: Rating and Performance.
- NEMA MG 1: Motors and Generators.
- CSA C 22.2 N°100: Motors and Generators.
- UL 1004-1: Rotating Electrical Machines - General Requirements.

If you have any questions regarding this manual please contact your local WEG branch, contact details can be found at www.weg.net.

TABLE OF CONTENTS

1. TERMINOLOGY 61

2. INITIAL RECOMMENDATIONS 62

2.1. WARNING SYMBOL ... 62
2.2. RECEIVING INSPECTION ... 62
2.3. NAMEPLATES ... 63

3. SAFETY INSTRUCTIONS 66

4. HANDLING AND TRANSPORT 67

4.1. LIFTING ... 67
4.1.1. Horizontal motors with one eyebolt ... 67
4.1.2. Horizontal motor with two eyebolts ... 68
4.1.3. Vertical motors ... 69
4.1.3.1. Procedures to place W22 motors in the vertical position ... 69
4.1.3.2. Procedures to place HGF and W50 motors in the vertical position ... 70
4.2 Procedures to place W22 vertical mount motors in horizontal position ... 71

5. STORAGE 73

5.1. EXPOSED MACHINED SURFACES ... 73
5.2. STORAGE ... 73
5.3 BEARINGS ... 74
5.3.1 Grease lubricated bearings ... 74
5.3.2 Oil lubricated bearings ... 74
5.3.3 Oil Mist lubricated bearings ... 75
5.3.4 Sleeve bearing ... 75
5.4. INSULATION RESISTANCE ... 75
5.4.1. Insulation resistance measurement ... 75

6. INSTALLATION 78

6.1. FOUNDATIONS ... 79
6.2. MOTOR MOUNTING ... 81
6.2.1. Foot mounted motors ... 81
6.2.2. Flange mounted motors ... 81
6.2.3. Pad mounted motors ... 82
6.3. BALANCING ... 82
6.4. COUPLINGS ... 82
6.4.1. Direct coupling ... 83
6.4.2. Gearbox coupling ... 83
6.4.3. Pulley and belt coupling ... 83
6.4.4. Coupling of sleeve bearing motors ... 83
6.5. LEVELING ... 84
6.6. ALIGNMENT ... 84
6.7. CONNECTION OF OIL LUBRICATED OR OIL MIST LUBRICATED MOTORS ... 85
6.8. CONNECTION OF THE COOLING WATER SYSTEM ... 85
6.9. ELECTRICAL CONNECTION ... 85
6.10. CONNECTION OF THE THERMAL PROTECTION DEVICES ... 89
6.11. RESISTANCE TEMPERATURE DETECTORS (PT-100) ... 90
6.12. CONNECTION OF THE SPACE HEATERS ... 91

6.13. STARTING METHODS 92
6.14. MOTORS DRIVEN BY FREQUENCY INVERTER 93
6.14.1. Use of dV/dt filter 93
6.14.1.1. Motor with enameled round wire 93
6.14.1.2. Motor with prewound coils 93
6.14.2. Bearing insulation 94
6.14.3. Switching frequency 94
6.14.4. Mechanical speed limitation 94

7. COMMISSIONING 95

7.1. INITIAL START-UP 95
7.2. OPERATING CONDITIONS 97
7.2.1.Limits of vibration 98

8. MAINTENANCE 99

8.1. GENERAL INSPECTION 99
8.2. LUBRICATION 99
8.2.1. Grease lubricated rolling bearings 100
8.2.1.1. Motor without grease fitting 103
8.2.1.2. Motor with grease fitting 103
8.2.1.3. Compatibility of the Mobil Polyrex EM grease with other greases 104
8.2.2. Oil lubricated bearings 104
8.2.3. Oil mist lubricated bearings 105
8.2.4. Sleeve bearings 105
8.3. MOTOR ASSEMBLY AND DISASSEMBLY 106
8.3.1. Terminal box 107
8.4. DRYING THE STATOR WINDING INSULATION 107
8.5. SPARE PARTS 108

9. ENVIRONMENTAL INFORMATION 109

9.1. PACKAGING 109
9.2. PRODUCT 109

10. TROUBLESHOOTING CHART X SOLUTIONS 110

1. TERMINOLOGY

Balancing: the procedure by which the mass distribution of a rotor is checked and, if necessary, adjusted to ensure that the residual unbalance or the vibration of the journals and/or forces on the bearings at a frequency corresponding to service speed are within specified limits in International Standards.
[ISO 1925:2001, definition 4.1]

Balance quality grade: indicates the peak velocity amplitude of vibration, given in mm/s, of a rotor running free-in-space and it is the product of a specific unbalance and the angular velocity of the rotor at maximum operating speed.

Grounded Part: metallic part connected to the grounding system.

Live Part: conductor or conductive part intended to be energized in normal operation, including a neutral conductor.

Authorized personnel: employee who has formal approval of the company.

Qualified personnel: employee who meets the following conditions simultaneously:
- Receives training under the guidance and responsibility of a qualified and authorized professional;
- Works under the responsibility of a qualified and approved professional.

Note*: The qualification is only valid for the company that trained the employee in the conditions set out by the authorized and qualified professional responsible for training.*

2. INITIAL RECOMMENDATIONS

Electric motors have energized circuits, exposed rotating parts and hot surfaces that may cause serious injury to people during normal operation. Therefore, it is recommended that transportation, storage, installation, operation and maintenance services are always performed by qualified personnel.
Also the applicable procedures and relevant standards of the country where the machine will be installed must be considered.
Noncompliance with the recommended procedures in this manual and other references on the WEG website may cause severe personal injuries and/or substantial property damage and may void the product warranty.

For practical reasons, it is not possible to include in this Manual detailed information that covers all construction variables nor covering all possible assembly, operation or maintenance alternatives.
This Manual contains only the required information that allows qualified and trained personnel to carry out their services. The product images are shown for illustrative purpose only.

For *Smoke Extraction Motors*, please refer to the additional instruction manual 50026367 available on the website www.weg.net.

For brake motors, please refer to the information contained in WEG 50021973 brake motor manual available on the website www.weg.net.

For information about permissible radial and axial shaft loads, please check the product technical catalogue.

The user is responsible for the correct definition of the installation environment and application characteristics.

During the warranty period, all repair, overhaul and reclamation services must be carried out by WEG authorized Service Centers to maintain validity of the warranty.

2.1. WARNING SYMBOL

Warning about safety and warranty.

2.2. RECEIVING INSPECTION

All motors are tested during the manufacturing process.
The motor must be checked when received for any damage that may have occurred during the transportation. All damages must be reported in writing to the transportation company, to the insurance company and to WEG. Failure to comply with such procedures will void the product warranty.
You must inspect the product:
- Check if nameplate data complies with the purchase order;
- Remove the shaft locking device (if any) and rotate the shaft by hand to ensure that it rotates freely;
- Check that the motor has not been exposed to excessive dust and moisture during the transportation.

Do not remove the protective grease from the shaft, or the plugs from the cable entries. These protections must remain in place until the installation has been completed.

2.3. NAMEPLATES

The nameplate contains information that describes the construction characteristics and the performance of the motor. Figure 2.1 and Figure 2.2 show nameplate layout examples.

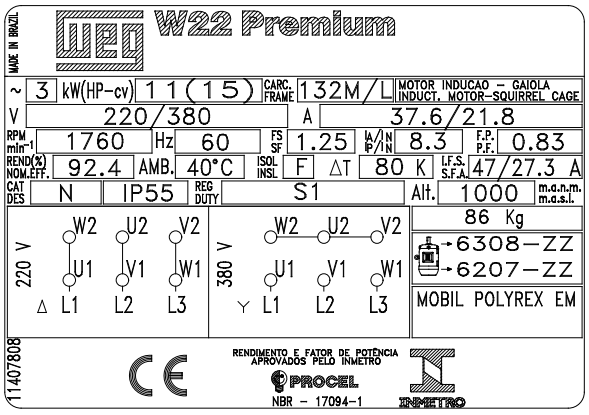

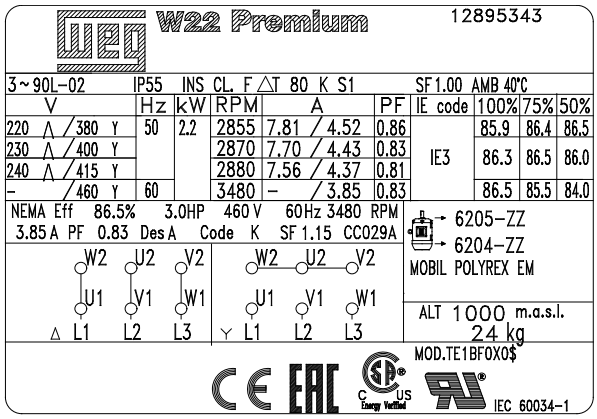

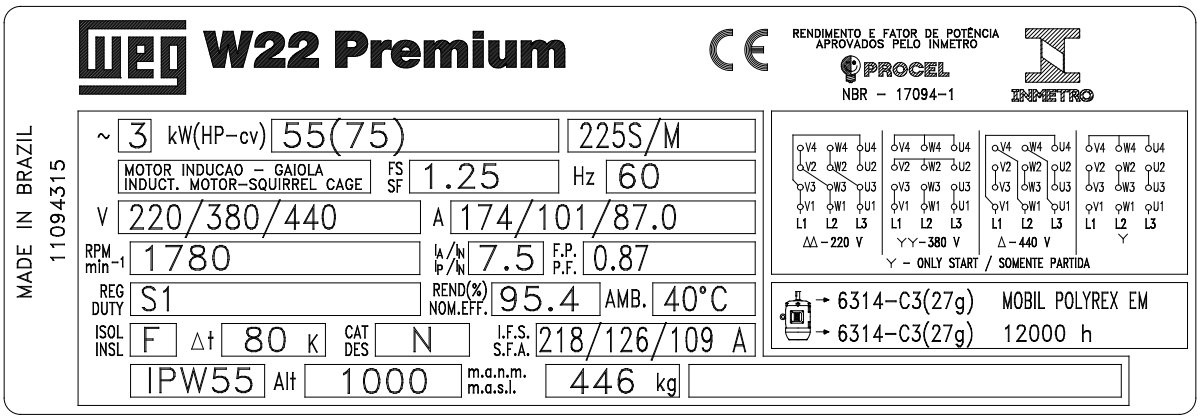

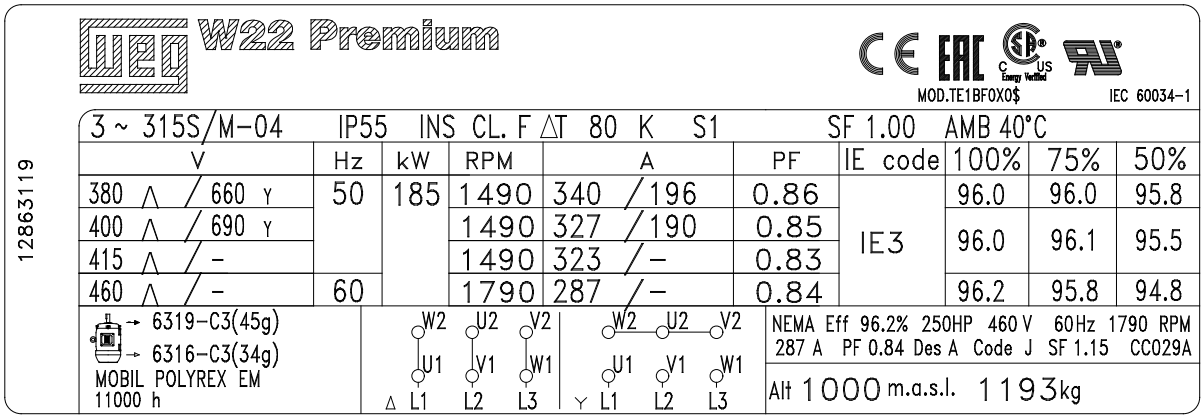

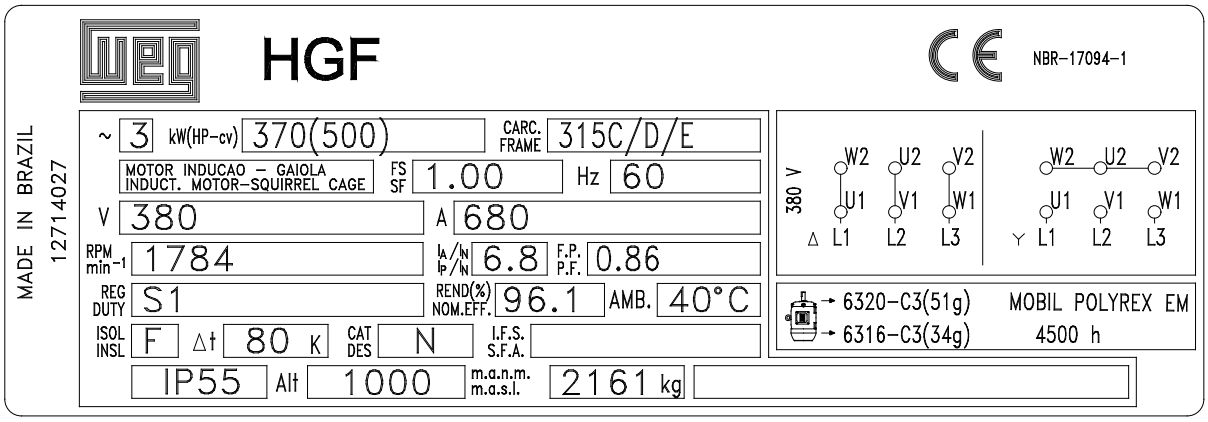

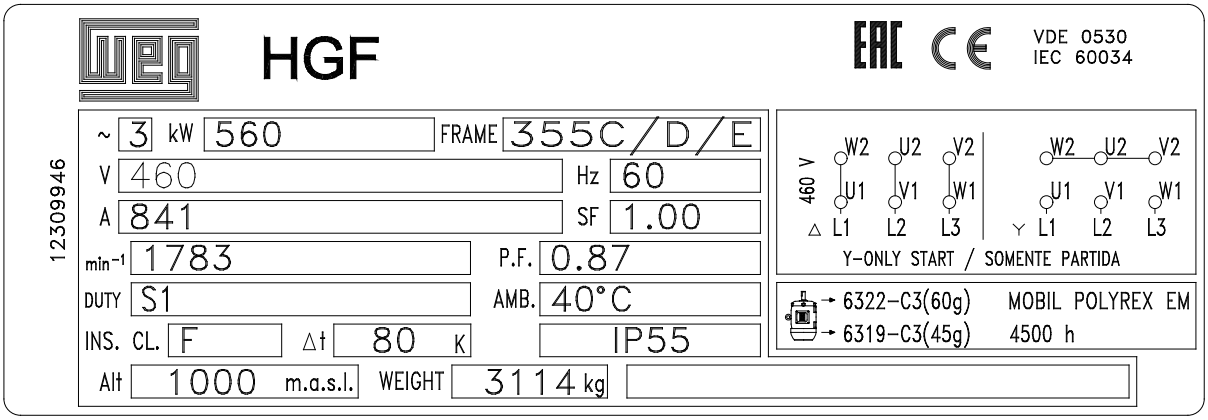

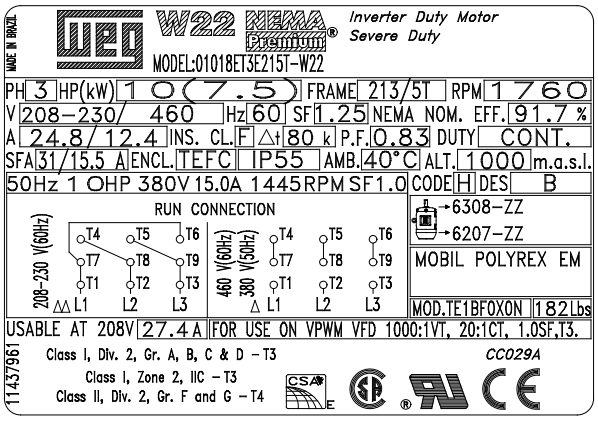

Figure 2.1 - *IEC motor nameplate*

ENGLISH

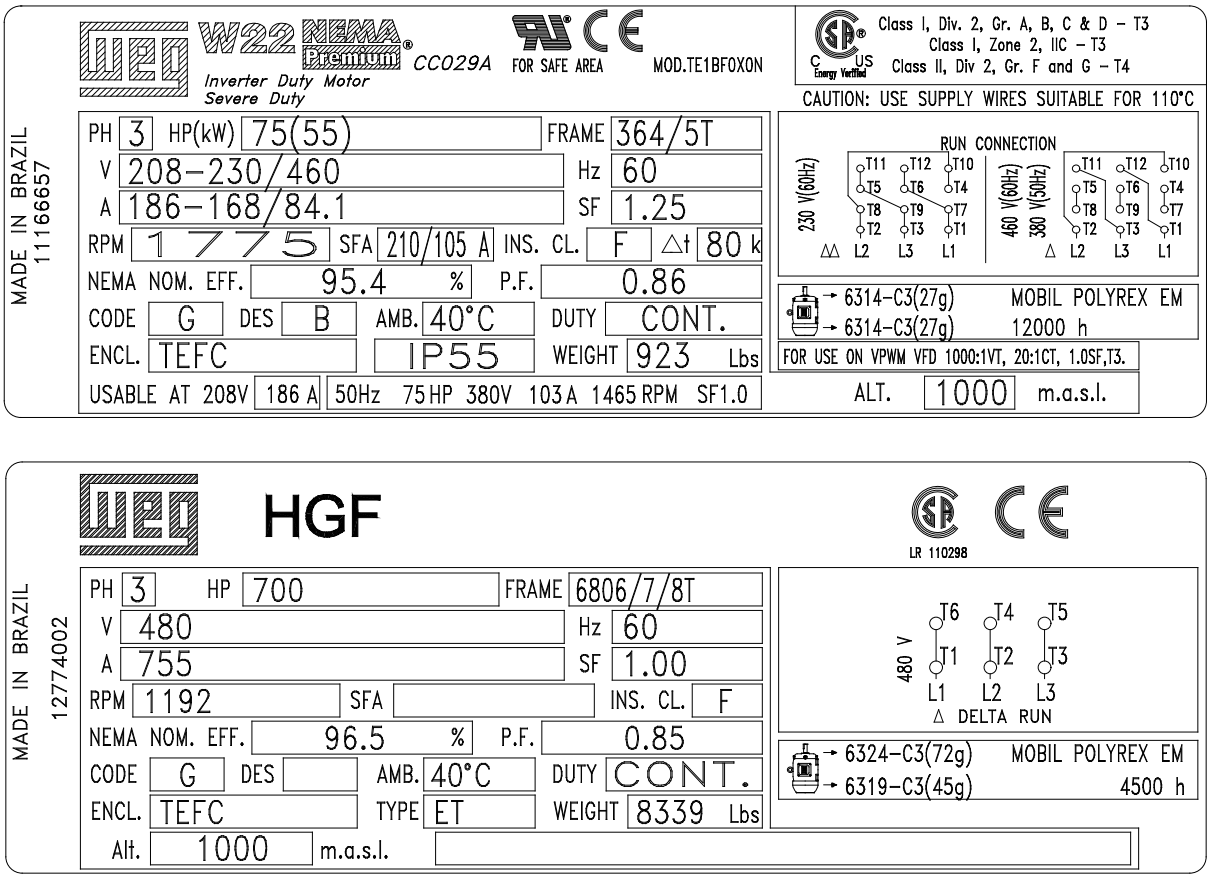

Figure 2.2 - *NEMA motor nameplate*

3. SAFETY INSTRUCTIONS



The motor must be disconnected from the power supply and be completely stopped before conducting any installation or maintenance procedures. Additional measures should be taken to avoid accidental motor starting.



Professionals working with electrical installations, either in the assembly, operation or maintenance, should use proper tools and be instructed on the application of standards and safety requirements, including the use of Personal Protective Equipment (PPE) that must be carefully observed in order to reduce risk of personal injury during these services.



Electric motors have energized circuits, exposed rotating parts and hot surfaces that may cause serious injury to people during normal operation. It is recommended that transportation, storage, installation, operation and maintenance services are always performed by qualified personnel.

Always follow the safety, installation, maintenance and inspection instructions in accordance with the applicable standards in each country.

4. HANDLING AND TRANSPORT

Individually packaged motors should never be lifted by the shaft or by the packaging. They must be lifted only by means of the eyebolts, when supplied. Use always suitable lifting devices to lift the motor. Eyebolts on the frame are designed for lifting the machine weight only as indicated on the motor nameplate. Motors supplied on pallets must be lifted by the pallet base with lifting devices fully supporting the motor weight.

The package should never be dropped. Handle it carefully to avoid bearing damage.

Eyebolts provided on the frame are designed for lifting the machine only. Do not use these eyebolts for lifting the motor with coupled equipment such as bases, pulleys, pumps, reducers, etc..

Never use damaged, bent or cracked eyebolts. Always check the eyebolt condition before lifting the motor.

Eyebolts mounted on components, such as on end shields, forced ventilation kits, etc. must be used for lifting these components only. Do not use them for lifting the complete machine set.

Handle the motor carefully without sudden impacts to avoid bearing damage and prevent excessive mechanical stresses on the eyebolts resulting in its rupture.

To move or transport motors with cylindrical roller bearings or angular contact ball bearings, use always the shaft locking device provided with the motor.
All HGF motors, regardless of bearing type, must be transported with shaft locking device fitted.
Vertical mounted motors with oil-lubricated bearings must be transported in the vertical position. If necessary to move or transport the motor in the horizontal position, install the shaft locking device on both sides (drive end and non-drive end) of the motor.

4.1. LIFTING

Before lifting the motor ensure that all eyebolts are tightened properly and the eyebolt shoulders are in contact with the base to be lifted, as shown in Figure 4.1. Figure 4.2 shows an incorrect tightening of the eyebolt.
Ensure that lifting machine has the required lifting capacity for the weight indicated on the motor nameplate.

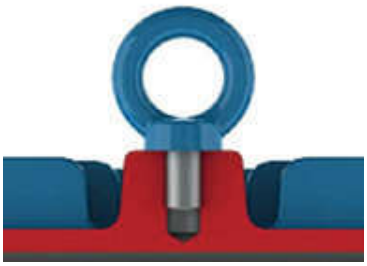

Figure 4.1 *- Correct tightening of the eyebolt*

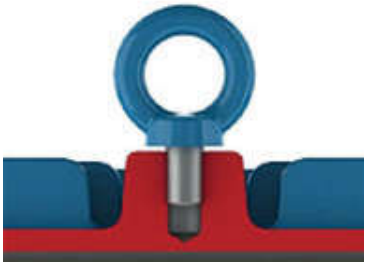

Figure 4.2 *- Incorrect tightening of the eyebolt*

The center-of-gravity may change depending on motor design and accessories. During the lifting procedures the maximum allowed angle of inclination should never be exceeded as specified below.

4.1.1. Horizontal motors with one eyebolt

For horizontal motors fitted with only one eyebolt, the maximum allowed angle-of-inclination during the lifting process should not exceed 30° in relation to the vertical axis, as shown in Figure 4.3.

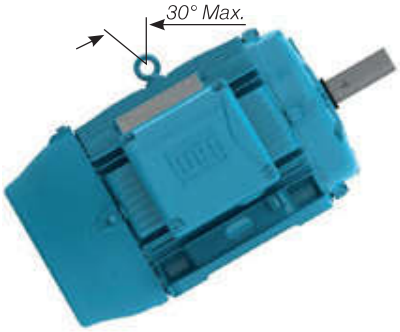

Figure 4.3 *- Maximum allowed angle-of-inclination for motor with one eyebolt*

4.1.2. Horizontal motor with two eyebolts

When motors are fitted with two or more eyebolts, all supplied eyebolts must be used simultaneously for the lifting procedure.

There are two possible eyebolt arrangements (vertical and inclined), as shown below:

- For motors with vertical lifting eyebolts, as shown in Figure 4.4, the maximum allowed lifting angle should not exceed 45° in relation to the vertical axis. We recommend to use a spreader beam for maintaining the lifting elements (chain or rope) in vertical position and thus preventing damage to the motor surface;



Figure 4.4 *- Maximum resulting angle for motors with two or more lifting eyebolts*

- For HGF, W40 and W50 motors, as shown in Figure 4.5, the maximum resulting angle should not exceed 30° in relation to the vertical axis;

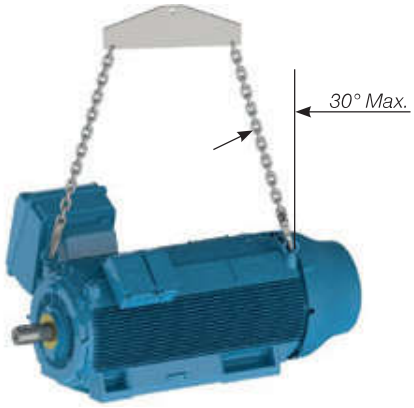

Figure 4.5 *- Maximum resulting angle for horizontal HGF, W40 and W50 motors*

- For motors fitted with inclined eyebolts, as shown in Figure 4.6, the use of a spreader beam is required for maintaining the lifting elements (chain or rope) in vertical position and thus preventing damage to the motor surface.



Figure 4.6 *- Use of a spreader beam for lifting*

4.1.3. Vertical motors

For vertical mounted motors, as shown in Figure 4.7, the use of a spreader beam is required for maintaining the lifting element (chain or rope) in vertical position and thus preventing damage to the motor surface.



Figure 4.7 *- Lifting of vertical mounted motors*

Always use the eyebolts mounted on the top side of the motor, diametrically opposite, considering the mounting position. See Figure 4.8.



Figure 4.8 *- Lifting of HGF and W50 motors.*

4.1.3.1. Procedures to place W22 motors in the vertical position

For safety reasons during the transport, vertical mounted Motors are usually packed and supplied in horizontal position.
To place W22 motors fitted with eyebolts (see Figure 4.6), to the vertical position, proceed as follows:

1. Ensure that the eyebolts are tightened properly, as shown in Figure 4.1;
2. Remove the motor from the packaging, using the top mounted eyebolts, as shown in Figure 4.9;



Figure 4.9 *- Removing the motor from the packaging*

3. Install a second pair of eyebolts, as shown in Figure 4.10;



Figure 4.10 *- Installation of the second pair of eyebolts*

4. Reduce the load on the first pair of eyebolts to start the motor rotation, as shown in Figure 4.11. This procedure must be carried out slowly and carefully.



Figure 4.11 *- End result: motor placed in vertical position*

These procedures will help you to move motors designed for vertical mounting. These procedures are also used to place the motor from the horizontal position into the vertical position and vertical to horizontal.

4.1.3.2. Procedures to place HGF and W50 motors in the vertical position

HGF motors are fitted with eight lifting points: four at drive end and four at non-drive end. W50 motors are fitted with nine lifting points: four at drive end, one in the central part and four at non-drive end. The motors are usually transported in horizontal position, however for the installation they must be placed in the vertical position.
To place an these motors in the vertical position, proceed as follows:

1. Lift the motor by using the four lateral eyebolts and two hoists, see Figure 4.12;



Figure 4.12 *- Lifting of HGF and W50 motors with two hoists*

2. Lower the hoist fixed to motor drive end while lifting the hoist fixed to motor non-drive end until the motor reaches its equilibrium, see Figure 4.13;



Figure 4.13 *- Placing HGF and W50 motors in vertical position*

3. Remove the hoist hooks from the drive end eyebolts and rotate the motor 180° to fix the removed hooks into the two eyebolts at the motor non-drive end, see Figure 4.14;



Figure 4.14 *- Lifting HGF and W50 motors by the eyebolts at the non-drive end*

4. Fix the removed hoist hooks in the other two eyebolts at the non-drive end and lift the motor until the vertical position is reached, see Figure 4.15.



Figure 4.15 *- HGF and W50 motors in the vertical position*

These procedures will help you to move motors designed for vertical mounting. These procedures are also used to place the motor from the horizontal position into the vertical position and vertical to horizontal.

4.2 Procedures to place W22 vertical mount motors in horizontal position

To place W22 vertical mount motor in horizontal position, proceed as follows:

1. Ensure that all eyebolts are tightened properly, as shown in Figure 4.1;

2. Install the first pair of eyebolts and lift the motor as shown in Figure 4.16;



Figure 4.16 - *Install the first pair of eyebolts*

3. Install the second pair of eyebolts, as shown in Figure 4.17;



Figure 4.17 - *Install the second pair of eyebolts*

4. Reduce the load on the first pair of eyebolts for rotating the motor, as shown in Figure 4.18. This procedure must be carried out slowly and carefully;



Figure 4.18 - *Motor is being rotated to horizontal position*

5. Remove the first pair of eyebolts, as shown in Figure 4.19.



Figure 4.19 - *Final result: motor placed in horizontal position*

5. STORAGE

If the motor is not installed immediately, it must be stored in a dry and clean environment, with relative humidity not exceeding 60%, with an ambient temperature between 5 °C and 40 °C, without sudden temperature changes, free of dust, vibrations, gases or corrosive agents. The motor must be stored in horizontal position, unless specifically designed for vertical operation, without placing objects on it. Do not remove the protection grease from shaft end to prevent rust.

If the motor are fitted with space heaters, they must always be turned on during the storage period or when the installed motor is out of operation. Space heaters will prevent water condensation inside the motor and keep the winding insulation resistance within acceptable levels. Store the motor in such position that the condensed water can be easily drained. If fitted, remove pulleys or couplings from the shaft end (more information are given on item 6).

The space heaters should never be energized when the motor is in operation.

5.1. EXPOSED MACHINED SURFACES

All exposed machined surfaces (like shaft end and flange) are factory-protected with temporary rust inhibitor. A protective film must be reapplied periodically (at least every six months), or when it has been removed and/or damaged.

5.2. STORAGE

The stacking height of the motor packaging during the storage period should not exceed 5 m, always considering the criteria indicated in Table 5.1:

Table 5.1 *- Max. recommended stacking height*

Packaging type	Frame sizes	Maximum stacking quantity
Cardboard box	IEC 63 to 132 NEMA 143 to 215	Indicated on the top side of the cardboard box
Wood crate	IEC 63 to 315 NEMA 48 to 504/5	06
	IEC 355 NEMA 586/7 and 588/9	03
	W40 / W50 / HGF IEC 315 to 630 W40 / W50 / HGF NEMA 5000 to 9600	Indicated on the packaging

Notes:
1) Never stack larger packaging onto smaller packaging;
2) Align the packaging correctly (see Figure 5.1 and Figure 5.2);

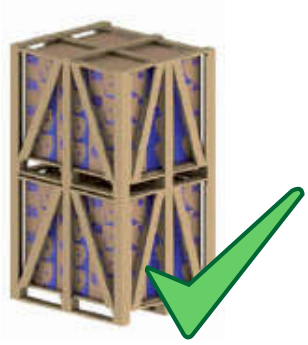

Figure 5.1 *- Correct stacking*

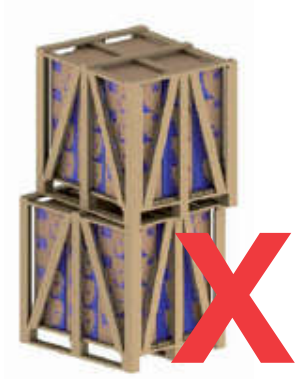

Figure 5.2 *- Incorrect stacking*

ENGLISH

3) The feet of the crates above should always be supported by suitable wood battens (Figure 5.3) and never stand on the steel tape or without support (Figure 5.4);



Figure 5.3 - Correct stacking



Figure 5.4 - Incorrect stacking

4) When stacking smaller crates onto longer crates, always ensure that suitable wooden supports are provided to withstand the weight (see Figure 5.5). This condition usually occurs with motor packaging above IEC 225S/M (NEMA 364/5T) frame sizes.



***Figure 5.5** - Use of additional battens for stacking*

5.3 BEARINGS

5.3.1 Grease lubricated bearings

We recommend rotating the motor shaft at least once a month (by hand, at least five revolutions, stopping the shaft at a different position from the original one). If the motor is fitted with shaft locking device, remove it before rotating the shaft and install it again before performing any handling procedure. Vertical motors may be stored in the vertical or in horizontal position. If motors with open bearings are stored longer than six months, the bearings must be relubricated according to item 8.2 before commissioning of the motor.
If the motor is stored for longer than 2 years, the bearings must be replaced or removed, washed, inspected and relubricated according to item 8.2.

5.3.2 Oil lubricated bearings

The motor must be stored in its original operating position and with oil in the bearings. Correct oil level must be ensured. It should be in the center of the sight glass.
During the storage period, remove the shaft locking device and rotate the shaft by hand every month, at least five revolutions, thus achieving an even oil distribution inside the bearing and maintaining the bearing in good operating conditions. Reinstall the shaft locking device every time the motor has to be moved.
If the motor is stored for a period equal or longer than the oil change interval, the oil must be replaced according to Item 8.2, before starting the operation. If the motor is stored for a period of over two years, the bearings must be replaced or removed, washed according to manufacturer instructions, checked and relubricated according to Item 8.2. The oil of vertical mounted motors is removed to prevent oils leaks during the transport. After receiving the motor the bearings must be lubricated.

5.3.3 Oil Mist lubricated bearings

The motor must be stored in horizontal position. Lubricate the bearings with ISO VG 68 mineral oil in the amount indicated in the Table 5.2 (this is also valid for bearings with equivalent dimensions). After filling with oil, rotate the shaft by hand, at least five revolutions)
During the storage period, remove the shaft locking device (if any) and rotate the shaft by hand every week, at least five revolutions, stopping it at a different position from the original one. Reinstall the shaft locking device every time the motor has to be moved. If the motor is stored for a period of over two years, the bearings must be replaced or removed, washed according to manufacturer instructions, checked and relubricated according to item 8.2.

***Table 5.2** - Amount of oil per bearing*

Bearing size	Amount of oil (ml)	Bearing size	Amount of oil (ml)
6201	15	6309	65
6202	15	6311	90
6203	15	6312	105
6204	25	6314	150
6205	25	6315	200
6206	35	6316	250
6207	35	6317	300
6208	40	6319	350
6209	40	6320	400
6211	45	6322	550
6212	50	6324	600
6307	45	6326	650
6308	55	6328	700

The oil must always be removed when the motor has to be handled. If the oil mist system is not operating after installation, fill the bearings with oil to prevent bearing rusting. During the storage period, rotate the shaft by hand, at least five revolutions, stopping it at a different position from the original one. Before starting the motor, all bearing protection oil must be drained from the bearing and the oil mist system must be switched ON.

5.3.4 Sleeve bearing

The motor must be stored in its original operating position and with oil in the bearings. Correct oil level must be ensured. It should be in the middle of the sight glass. During the storage period, remove the shaft locking device and rotate the shaft by hand every month, at least five revolutions, and at 30 rpm, thus achieving an even oil distribution inside the bearing and maintaining the bearing in good operating conditions. Reinstall the shaft locking device every time the motor has to be moved.
If the motor is stored for a period equal or longer than the oil change interval, the oil must be replaced, according to Item 8.2, before starting the operation.

If the motor is stored for a period longer than the oil change interval, or if it is not possible to rotate the motor shaft by hand, the oil must be drained and a corrosion protection and dehumidifiers must be applied.

5.4. INSULATION RESISTANCE

We recommend measuring the winding insulation resistance at regular intervals to follow-up and evaluate its electrical operating conditions. If any reduction in the insulation resistance values are recorded, the storage conditions should be evaluated and corrected, where necessary.

5.4.1. Insulation resistance measurement

We recommend measuring the winding insulation resistance at regular intervals to follow-up and evaluate its electrical operating conditions. If any reduction in the insulation resistance values are recorded, the storage conditions should be evaluated and corrected, where necessary.



The insulation resistance must be measured in a safe environment.

The insulation resistance must be measured with a megohmmeter. The machine must be in cold state and disconnected from the power supply.

To prevent the risk of an electrical shock, ground the terminals before and after each measurement. Ground the capacitor (if any) to ensure that it is fully discharged before the measurement is taken.

It is recommended to insulate and test each phase separately. This procedure allows the comparison of the insulation resistance between each phase. During the test of one phase, the other phases must be grounded. The test of all phases simultaneously evaluates the insulation resistance to ground only but does not evaluate the insulation resistance between the phases.
The power supply cables, switches, capacitors and other external devices connected to the motor may considerably influence the insulation resistance measurement. Thus all external devices must be disconnected and grounded during the insulation resistance measurement.
Measure the insulation resistance one minute after the voltage has been applied to the winding. The applied voltage should be as shown in Table 5.3.

Table 5.3 *- Voltage for the insulation resistance*

Winding rated voltage (V)	Testing voltage for measuring the insulation resistance (V)
< 1000	500
1000 - 2500	500 - 1000
2501 - 5000	1000 - 2500
5001 - 12000	2500 - 5000
> 12000	5000 - 10000

The reading of the insulation resistance must be corrected to 40 °C as shown in the Table 5.4.

Table 5.4 *- Correction factor for the insulation resistance corrected to 40 °C*

Measuring temperature of the insulation resistance (°C)	Correction factor of the insulation resistance corrected to 40 °C	Measuring temperature of the insulation resistance (°C)	Correction factor of the insulation resistance corrected to 40 °C
10	0.125	30	0.500
11	0.134	31	0.536
12	0.144	32	0.574
13	0.154	33	0.616
14	0.165	34	0.660
15	0.177	35	0.707
16	0.189	36	0.758
17	0.203	37	0.812
18	0.218	38	0.871
19	0.233	39	0.933
20	0.250	40	1.000
21	0.268	41	1.072
22	0.287	42	1.149
23	0.308	43	1.231
24	0.330	44	1.320
25	0.354	45	1.414
26	0.379	46	1.516
27	0.406	47	1.625
28	0.435	48	1.741
29	0.467	49	1.866
30	0.500	50	2.000

The motor insulation condition must be evaluated by comparing the measured value with the values indicated in Table 5.5 (corrected to 40 °C):

Table 5.5 *- Evaluation of the insulation system*

Limit value for rated voltage up to 1.1 kV (MΩ)	Limit value for rated voltage above 1.1 kV (MΩ)	Situation
Up to 5	Up to 100	Dangerous. The motor can not be operated in this condition
5 to 100	100 to 500	Regular
100 to 500	Higher than 500	Good
Higher than 500	Higher than 1000	Excellent

The values indicated in the table should be considered only as reference values. It is advisable to log all measured values to provide a quick and easy overview on the machine insulation resistance.
If the insulation resistance is low, moisture may be present in the stator windings. In this case the motor should be removed and transported to a WEG authorized Service Center for proper evaluation and repair (This service is not covered by the warranty). To improve the insulation resistance through the drying process, see section 8.4.

6. INSTALLATION

The insulation resistance must be measured in a safe environment.

Check some aspects before proceeding with the installation:

1. Insulation resistance: must be within the acceptable limits. See item 5.4.
2. Bearings:
   If the motor is installed without running immediately, proceed as described in item 5.3.
3. Operating conditions of the start capacitors: If single-phase motors are stored for a period of over two years, it is recommended to change the start capacitors before motor starting since they lose their operating characteristics.
4. Terminal box:
   a. the inside of the terminal box must be clean and dry;
   b. the contacts must be correctly connected and corrosion free. See 6.9 and 6.10;
   c. the cable entries must be correctly sealed and the terminal box cover properly mounted in order to ensure the degree of protection indicated on the motor nameplate.
5. Cooling: the cooling fins, air inlet and outlet openings must be clean and unobstructed. The distance between the air inlet openings and the wall should not be shorter than ¼ (one quarter) of the diameter of the air inlet. Ensure sufficient space to perform the cleaning services. See item 7.
6. Coupling: remove the shaft locking device (where fitted) and the corrosion protection grease from the shaft end and flange just before installing the motor. See item 6.4.
7. Drain hole: the motor must always be positioned so the drain hole is at the lowest position (If there is any indication arrow on the drain, the drain must be so installed that the arrow points downwards).
   Motors supplied with rubber drain plugs leave the factory in the closed position and must be opened periodically to allow the exit of condensed water. For environments with high water condensation levels and motor with degree of protection IP55, the drain plugs can be mounted in open position (see Figure 6.1).
   For motors with degree of protection IP56, IP65 or IP66, the drain plugs must remain at closed position (see Figure 6.1), being opened only during the motor maintenance procedures.
   The drain system of motors with Oil Mist lubrication system must be connected to a specific collection system (see Figure 6.12).

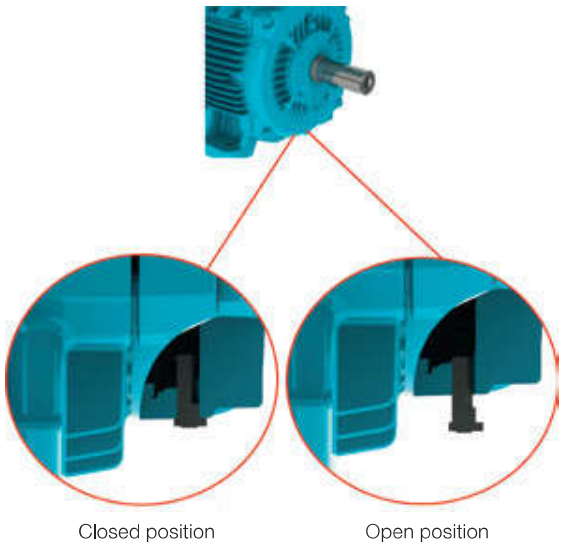

Figure 6.1 *- Detail of the rubber drain plug mounted in closed and open position*

8.Additional recommendations:
a. Check the direction of motor rotation, starting the motor at no-load before coupling it to the load;
b. Vertical mounted motors with shaft end down must be fitted with drip cover to protect them from liquids or solids that may drop onto the motors;
c. Vertical mounted motors with shaft end up should be fitted with water slinger ring to prevent water ingress inside the motor.
d. The fixing elements mounted in the threaded through holes in the motor enclosure (for example, the flange) must be properly sealed.

Remove or fix the shaft key before starting the motor.

Changes on the motor construction (features), such as installation of extended grease fittings or modification of the lubrication system, installation of accessories at alternative locations, etc., can be carried out only after prior written consent from WEG.

6.1. FOUNDATIONS

The foundation is the structure, structural element, natural or prepared base, designed to withstand the stresses produced by the installed equipment, ensuring safe and stable performance during operation. The foundation design should consider the adjacent structures to avoid the influences of other installed equipment and no vibration is transferred through the structure

The foundation must be flat and its selection and design must consider the following characteristics:

a) The features of the machine to be installed on the foundation, the driven loads, application, maximum allowed deformations and vibration levels (for instance, motors with reduced vibration levels, foot flatness, flange concentricity, axial and radial loads, etc. lower than the values specified for standard motors).

b) Adjacent buildings, conservation status, maximum applied load estimation, type of foundation and fixation and vibrations transmitted by theses constructions.

If the motor is supplied with leveling/alignment bolts, this must be considered in the base design.

Please consider for the foundation dimensioning all stresses that are generated during the operation of the driven load.
The user is responsible for the foundation designing and construction.

The foundation stresses can be calculated by using the following equations (see Figure 6.2):

$$F_1 = 0,5 * g * m - (4 * T_b / A)$$
$$F_2 = 0,5 * g * m + (4 * T_b / A)$$

Where:

F_1 and F_2 = lateral stresses (N);
g = gravitational acceleration (9,8 m/s^2);
m = motor weight (kg);
T_b = breakdown torque (Nm);
A = distance between centerlines of mounting holes in feet or base of the machine (end view) (m).

The motors may be mounted on:

- Concrete bases: are most used for large-size motors (see Figure 6.2);
- Metallic bases: are generally used for small-size motors (see Figure 6.3).

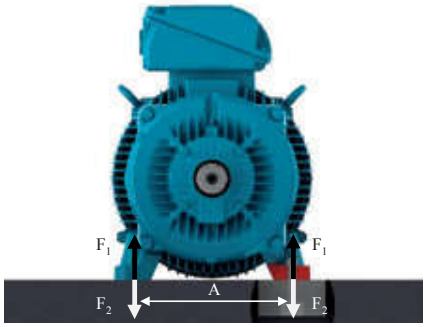

Figure 6.2 *- Motor installed on concrete base*



Figure 6.3 *- Motor installed on metallic base*

The metallic and concrete bases may be fitted with sliding system. These types of foundations are generally used where the power transmission is achieved by belts and pulleys. This power transmission system is easier to assemble/disassemble and allows the belt tension adjustment. Other important aspect of this foundation type is the location of the base locking screws that must be diagonally opposite. The rail nearest the drive pulley is placed in such a way that the positioning bolt is between the motor and the driven machine. The other rail must be placed with the bolt on the opposite side (diagonally opposite), as shown in Figure 6.4 .

To facilitate assembly, the bases may have the following features:

- Shoulders and/or recesses;
- Anchor bolts with loose plates;
- Bolts cast in the concrete;
- Leveling screws;
- Positioning screws;
- Steel & cast iron blocks, plates with flat surfaces.

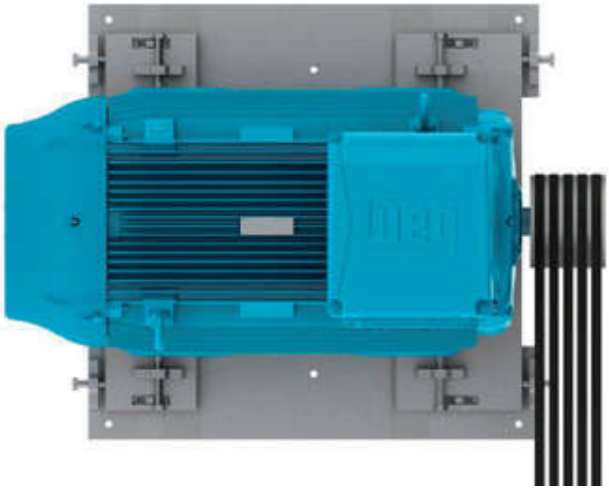

Figure 6.4 *- Motor installed on sliding base*

After completing the installation, it is recommended that all exposed machined surfaces are coated with suitable rust inhibitor.

6.2. MOTOR MOUNTING

Footless motors supplied with transportation devices, according to Figure 6.5, must have their devices removed before starting the motor installation.

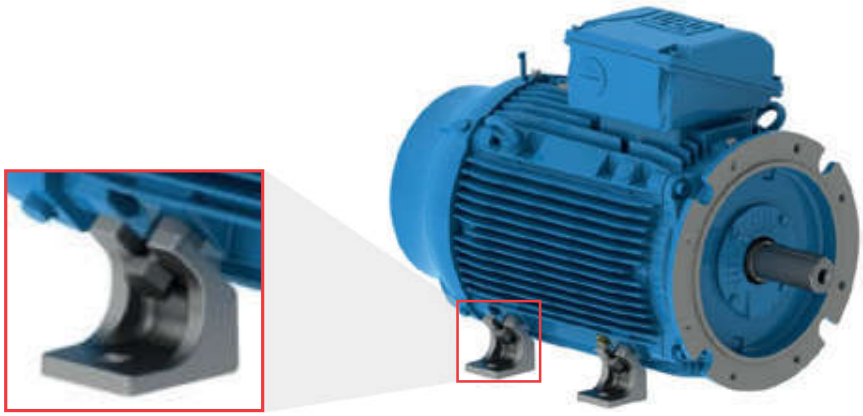

Figure 6.5 *- Detail of the transportation devices for footless motors*

6.2.1. Foot mounted motors

The drawings of the mounting hole dimensions for NEMA or IEC motors can be checked in the respective technical catalogue.
The motor must be correctly aligned and leveled with the driven machine. Incorrect alignment and leveling may result in bearing damage, generate excessive vibration and even shaft distortion/breakage.
For more details, see section 6.3 and 6.6. The thread engagement length of the mounting bolt should be at least 1.5 times the bolt diameter. This thread engagement length should be evaluated in more severe applications and increased accordingly.
Figure 6.6 shows the mounting system of a foot mounted motor indicating the minimum required thread engagement length.

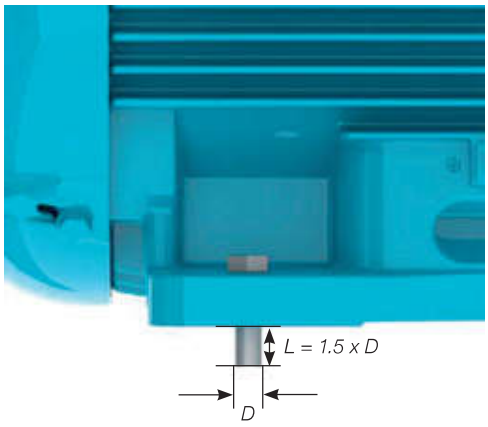

Figure 6.6 *- Mounting system of a foot mounted motor*

6.2.2. Flange mounted motors

The drawings of the flange mounting dimensions, IEC and NEMA flanges, can be checked in the technical catalogue.
The coupling of the driven equipment to the motor flange must be properly dimensioned to ensure the required concentricity of the assembly.
Depending on the flange type, the mounting can be performed from the motor to the driven equipment flange (flange FF (IEC) or D (NEMA)) or from the driven equipment flange to the motor (flange C (DIN or NEMA)).
For the mounting process from the driven equipment flange to the motor, you must consider the bolt length, flange thickness and the thread depth of the motor flange.

If the motor flange has tapped through-holes, the length of the mounting bolts must not exceed the tapped through-hole length of the motor flange, thus preventing damage to the winding head.

For flange mounting the thread engagement length of the mounting bolt should be at least 1.5 times the bolt diameter. In severe applications, longer thread engagement length may be required.
In severe applications or if large motors are flange mounted, a foot or pad mounting may be required in addition to the flange mounting (Figure 6.7). The motor must never be supported on its cooling fins.



Figure 6.7 *- Mounting method of flange mounted motors with frame base support*

Note*:*
When liquid (for example oil) is likely to come into contact with the shaft seal, please contact your local WEG representative.

6.2.3. Pad mounted motors

Typically, this method of mounting is used in axial fans. The motor is fixed by tapped holes in the frame. The dimensions of these tapped holes can be checked in the respective product catalogue. The selection of the motor mounting rods/bolts must consider the dimensions of the fan case, the installation base and the thread depth in the motor frame.
The mounting rods and the fan case wall must be sufficiently stiff to prevent the transmission of excessive vibration to the machine set (motor & fan). Figure 6.8 shows the pad mounting system.

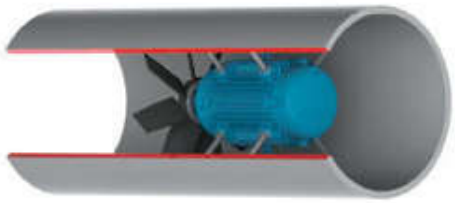

Figure 6.8 *- Mounting of the motor inside the cooling duct*

6.3. BALANCING

Unbalanced machines generate vibration which can result in damage to the motor. WEG motors are dynamically balanced with “half key” and without load (uncoupled). Special balancing quality level must be stated in the Purchase Order.

The transmission elements, such as pulleys, couplings, etc., must balanced with “half key” before they are mounted on the motor shaft.

The balance quality grade meets the applicable standards for each product line.

The maximum balancing deviation must be recorded in the installation report.

6.4. COUPLINGS

Couplings are used to transmit the torque from the motor shaft to the shaft of the driven machine. The following aspects must be considered when couplings are installed:

- Use proper tools for coupling assembly & disassembly to avoid damages to the motor and bearings;
- Whenever possible, use flexible couplings, since they can absorb eventual residual misalignments during the machine operation;
- The maximum loads and speed limits informed in the coupling and motor manufacturer catalogues cannot be exceeded;
- Level and align the motor as specified in sections 6.5 and 6.6, respectively.

Remove or fix the shaft key firmly when the motor is operated without coupling in order to prevent accidents.

6.4.1. Direct coupling

Direct coupling is characterized when the Motor shaft is directly coupled to the shaft of the driven machine without transmission elements. Whenever possible, use direct coupling due to lower cost, less space required for installation and more safety against accidents.

Do not use roller bearings for direct coupling, unless sufficient radial load is expected.

6.4.2. Gearbox coupling

Gearbox coupling is typically used where speed reduction is required.
Make sure that shafts are perfectly aligned and strictly parallel (in case of straight spur gears) and in the right meshing angle (in case of bevel and helical gears).

6.4.3. Pulley and belt coupling

Pulleys and belts are used when speed increase or reduction between motor shaft and driven load is required.

Excessive belt tension will damage the bearings and cause unexpected accidents such as breakage of the motor shaft.

6.4.4. Coupling of sleeve bearing motors

Motors designed with sleeve bearings must be operated with direct coupling to the driven machine or a gearbox. Pulley and belts can not be applied for sleeve bearing motors.

Motors designed with sleeve bearings have 3 (three) marks on the shaft end. The center mark is the indication of the magnetic center and the 2 (two) outside marks indicate the allowed limits of the rotor axial movement, as shown in Figure 6.9.
The motor must be so coupled that during operation the arrow on the frame is placed over the central mark indicating the rotor magnetic center. During start-up, or even during operation, the rotor may freely move between the two outside marks when the driven machine exerts an axial load on the motor shaft. However, under no circumstance, the motor can operate continuously with axial forces on the bearing.

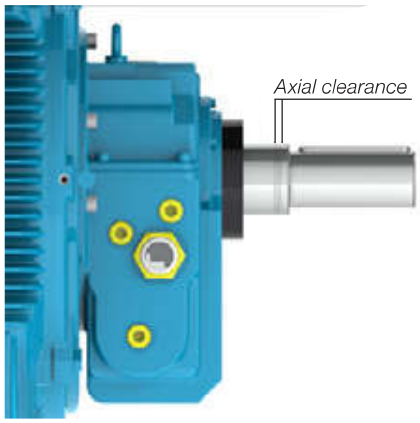

Figure 6.9 *- Axial clearance of motor designed with sleeve bearing*

For coupling evaluation consider the maximum axial bearing clearance as shown in Table 6.1.
The axial clearance of the driven machine and coupling influence the maximum bearing clearance.

Table 6.1 *- Clearance used for sleeve bearings*

Bearing size	Total axial clearance (mm)
9*	3 + 3 = 6
11*	4 + 4 = 8
14*	5 + 5 =10
18	7,5 + 7,5 = 15

** For Motors in accordance with API 541, the total axial clearance is 12.7 mm*

The sleeve bearings used by WEG were not designed to support axial load continuously.
Under no circumstance must the motor be operated continuously at its axial clearance limits.

6.5. LEVELING

The motor must be leveled to correct any deviations in flatness arising from the manufacturing process and the material structure rearrangement. The leveling can be carried out by a leveling screw fixed on the motor foot or on the flange or by means of thin compensation shims. After the leveling process, the leveling height between the motor mounting base and the motor cannot exceed 0.1 mm.
If a metallic base is used to level the height of the motor shaft end and the shaft end of the driven machine, level only the metallic base relating to the concrete base.

Record the maximum leveling deviations in the installation report.

6.6. ALIGNMENT

The correct alignment between the motor and the driven machine is one of the most important variables that extends the useful service life of the motor. Incorrect coupling alignment generates high loads and vibrations reducing the useful life of the bearings and even resulting in shaft breakages. Figure 6.10 illustrates the misalignment between the motor and the driven machine.

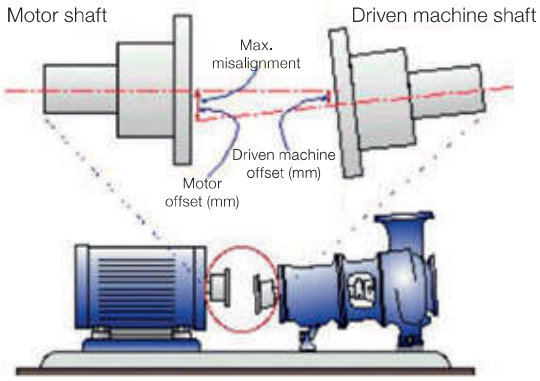

Figure 6.10 *- Typical misalignment condition*

Alignment procedures must be carried out using suitable tools and devices, such as dial gauge, laser alignment instruments, etc.. The motor shaft must be aligned axially and radially with the driven machine shaft.

The maximum allowed eccentricity for a complete shaft turn should not exceed 0.03 mm, when alignment is made with dial gauges, as shown in Figure 6.11. Ensure a gap between couplings to compensate the thermal expansion between the shafts as specified by the coupling manufacturer.

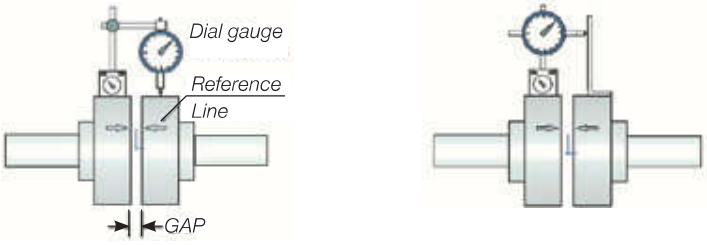

Parallel alignment *Angular alignment*

Figure 6.11 *- Alignment with dial gauge*

If alignment is made by a laser instrument, please consider the instructions and recommendations provided by the laser instrument manufacturer.
The alignment should be checked at ambient temperature with machine at operating temperature.

The coupling alignment must be checked periodically.

Pulley and belt couplings must be so aligned that the driver pulley center lies in the same plane of the driven pulley center and the motor shaft and the shaft of the driven machine are perfectly parallel.
After completing the alignment procedures, ensure that mounting devices do not change the motor and machine alignment and leveling resulting into machine damage during operation.

It is recommended to record the maximum alignment deviation in the Installation Report.

6.7. CONNECTION OF OIL LUBRICATED OR OIL MIST LUBRICATED MOTORS

When oil lubricated or oil mist lubricated motors are installed, connect the existing lubricant tubes (oil inlet and oil outlet tubes and motor drain tube), as shown in Figure 6.12. The lubrication system must ensure continuous oil flow through the bearings as specified by the manufacturer of the installed lubrication system.

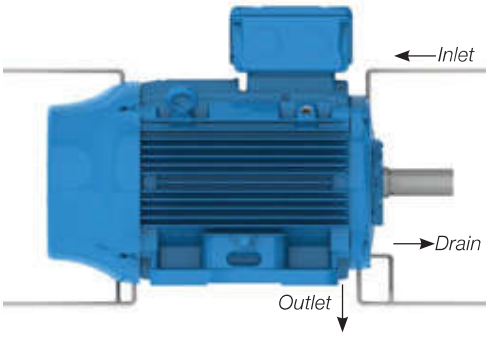

Figure 6.12 *- Oil supply and drain system of oil lubricated or oil mist lubricated motors*

6.8. CONNECTION OF THE COOLING WATER SYSTEM

When water cooled motors are installed, connect the water inlet and outlet tubes to ensure proper motor cooling. According to item 7.2, ensure correct cooling water flow rate and water temperature in the motor cooling system.

6.9. ELECTRICAL CONNECTION

Consider the rated motor current, service factor, starting current, environmental and installation conditions, maximum voltage drop, etc. to select appropriate power supply cables and switching and protection devices. All motors must be installed with overload protection systems. Three-phase motors should be fitted with phase fault protection systems.

Before connecting the motor, check if the power supply voltage and the frequency comply with the motor nameplate data. All wiring must be made according to the connection diagram on the motor nameplate. Please consider the connection diagrams in the Table 6.2 as reference value.
To prevent accidents, check if motor has been solidly grounded in accordance with the applicable standards.

Table 6.2 - Typical connection diagram for three-phase motors.

Configuration	Quantity of leads	Type of connection	Connection diagram
Single speed	3	-	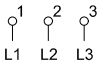
	6	Δ - Y	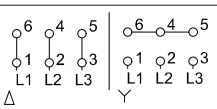
	9	YY - Y	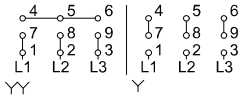
		ΔΔ - Δ	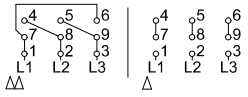
	12	ΔΔ - YY - Δ - Y	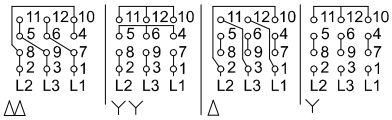
		Δ - PWS Part-winding start	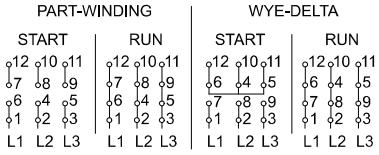
Double speed Dahlander	6	YY - Y Variable Torque	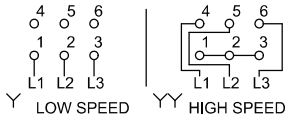
		Δ - YY Constant Torque	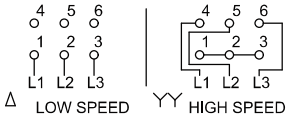
		YY - Δ Constant Output	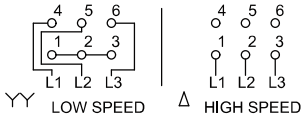
	9	Δ - Y - YY	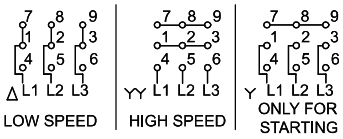
Double speed Double winding	6	-	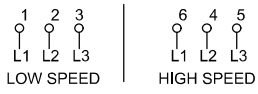

Equivalent table for lead identification													
Lead identification on the wiring diagram		**1**	**2**	**3**	**4**	**5**	**6**	**7**	**8**	**9**	**10**	**11**	**12**
Single speed	NEMA MG 1 Part 2	T1	T2	T3	T4	T5	T6	T7	T8	T9	T10	T11	T12
	IEC 60034-8	U1	V1	W1	U2	V2	W2	U3	V3	W3	U4	V4	W4
	JIS (JEC 2137) - up to 6 terminals	U	V	W	X	Y	Z						
	JIS (JEC 2137) - above 6 terminals	U1	V1	W1	U2	V2	W2	U5	V5	W5	U6	V6	W6
Double speed (Dahlander / Double winding)	NEMA MG 1 Part 2[1)]	1U	1V	1W	2U	2V	2W	3U	3V	3W	4U	4V	4W
	IEC 60034-8	1U	1V	1W	2U	2V	2W	3U	3V	3W	4U	4V	4W
	JIS (JEC 2137)	1U	1V	1W	2U	2V	2W	3U	3V	3W	4U	4V	4W

1) NEMA MG 1 Part 2 defines T1 to T12 for two or more winding, however WEG adopts 1U to 4W.

WARNING - Local Standards have priority on the definition of the connection standards.

The connections presented below are a reference for the connection of the customer's power cables on low voltage motors with terminal block. The terminal blocks presented below are the standard for each product line, however variations may occur.
It is recommended the use of terminals made of electrolytic copper or brass, similar to the terminals used on the motors cables.

W21 and W22

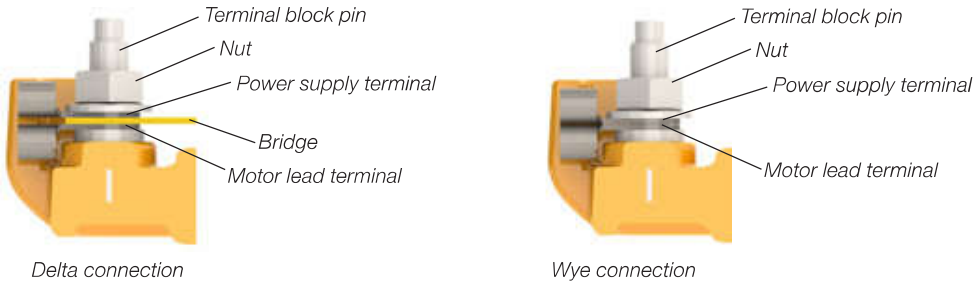

Figure 6.13 *- Connetion for W21 and W22 motors with terminal block*

W50 and HGF

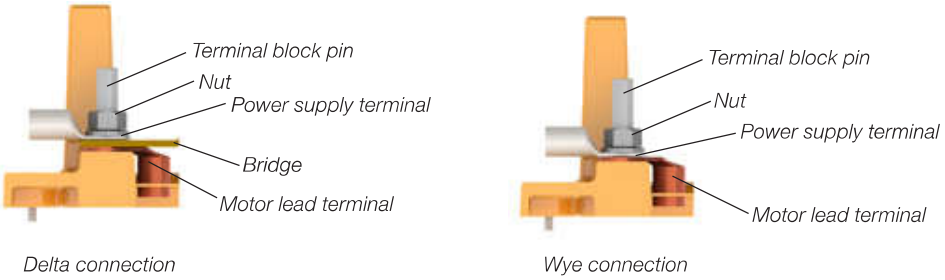

Figure 6.14 *- Connetion for W50 and HGF motors with terminal block*

If motors are supplied without terminal blocks, insulate the cable terminals with suitable insulation material that meets the power supply voltage and the insulation class indicated on the motor nameplate.

Ensure correct tightening torque for the power cable and grounding connections as specified in Table 8.11

The clearance distance (see Figure 6.15) between non-insulated live parts with each other and between grounded parts must be as indicated in Table 6.3.

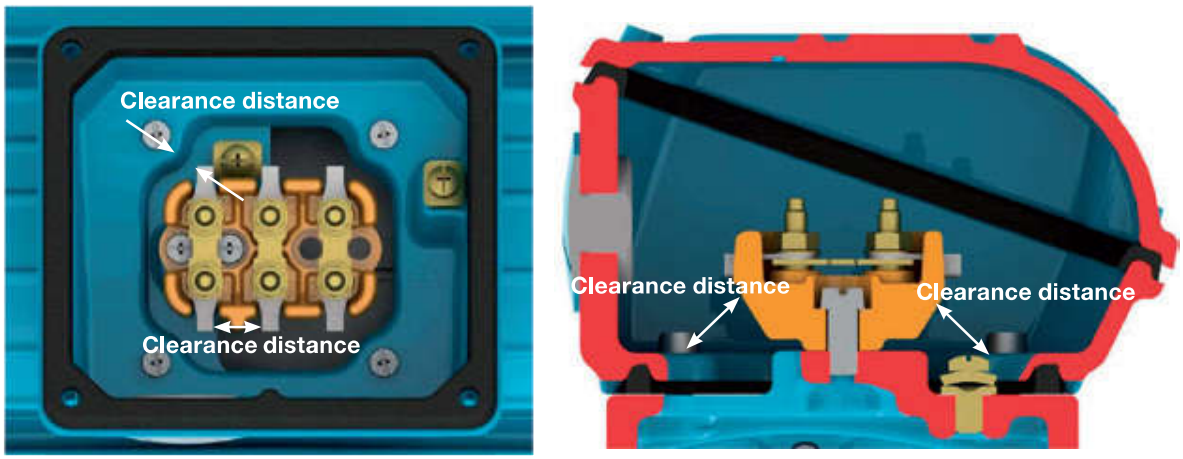

Figure 6.15 - *Clearance distance representation*

Table 6.3 - *Minimum clearance distance (mm) x supply voltage*

Voltage	Minimum clearance distance (mm)
U ≤ 440 V	4
440 < U ≤ 690 V	5.5
690 < U ≤ 1000 V	8
1000 < U ≤ 6900 V	45
6900 < U ≤ 11000 V	70
11000 < U ≤ 16500 V	105

Even when the motor is off, dangerous voltages may be present inside the terminal box used for the space heater supply or winding energization when the winding is used as heating element.
Motor capacitors will hold a charge even after the power has been cut off. Do not touch the capacitors and/or motor terminals, before discharging the capacitors completely.

After the motor connection has been completed, ensure that no tool or foreign body has been left inside the terminal box.

Take the required measures in order to ensure the degree of protection indicated on the motor nameplate:
- unused cable inlet holes in the terminal boxes must be properly closed with blanking plugs;
- components supplied loose (for example, terminal boxes mounted separately) must be properly closed and sealed.
The cable inlets used for power supply and control must be fitted with components (for example, cable-glands and conduits) that meet the applicable standards and regulations in each country.

If the motor is fitted with accessories, such as brakes and forced cooling systems, these devices must be connected to the power supply according to the information provided on their nameplates and with special care as indicated above.

All protection devices, including overcurrent protection, must be set according to the rated machine conditions. These protection devices must protect the machine against short circuit, phase fault or locked rotor condition. The motor protection devices must be set according to the applicable standards.

Check the direction of rotation of the motor shaft. If there is no limitation for the use of unidirectional fans, the shaft rotation direction can be changed by reversing any two of the phase connections. For single-phase motor, check the connection diagram indicated on the motor nameplate.

6.10. CONNECTION OF THE THERMAL PROTECTION DEVICES

If the motor is supplied with temperature monitoring devices, such as, thermostat, thermistors, automatic thermal protectors, Pt-100 (RTD), etc., they must be connected to the corresponding control devices as specified on the accessory nameplates. The non-compliance with this procedure may void the product warranty and cause serious material damages.

Do not apply test voltage above 2.5 V on thermistors and current above 1 mA on RTDs (Pt-100) according to IEC 60751 standard.

Figure 6.16 and Figure 6.17 show the connection diagram of the bimetal thermal protector (thermostats) and thermistors, respectively.

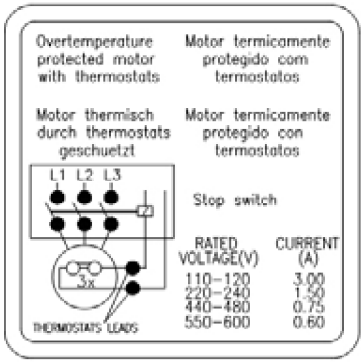

Figure 6.16 *- Connection of the bimetal thermal protectors (thermostats)*

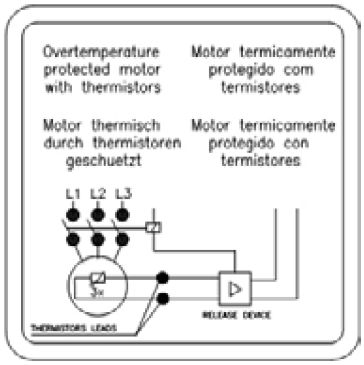

Figure 6.17 *- Thermistor connection*

The alarm temperature limits and thermal protection shutdowns can be defined according to the application; however these temperature limits can not exceed the values in Table 6.4.

Table 6.4 *- Maximum activation temperature of the thermal protections*

Component	Insulation class	Maximum temperature of the protection setting (°C)	
		Alarm	Tripping
Winding	B	-	130
	F	130	155
	H	155	180
Bearing	All	110	120

Notes:
1) The number and type of the installed protection devices are stated on the accessory nameplate of the motor.
2) If the motor is supplied with calibrated resistance, (for example, Pt-100), the motor protection system must be set according to the operating temperatures indicated in Table 6.4.

6.11. RESISTANCE TEMPERATURE DETECTORS (PT-100)

The thermocouples Pt-100 are made of materials, whose resistance depends on the temperature variation, intrinsic property of some materials (usually platinum, nickel or copper), calibrated resistance. Its operation is based on the principle that the electric resistance of a metallic conductor varies linearly with the temperature, thus allowing a continuous monitoring of the motor warm-up through the controller display ensuring a high level of precision and answer stability. These devices are widely used for measuring temperatures in various industry sectors.
In general these devices are used in installations where precise temperature control is required, for example, in installation for irregular or intermittent duty.
The same detector may be used for alarm and tripping purposes.

Table 6.5 and Figure 6.18 show the equivalence between the Pt-100 resistance and the temperature.

Table 6.5 *- Equivalence between the Pt-100 resistance and the temperature*

°C	Ω	°C	Ω	°C	Ω	°C	Ω	°C	Ω
-29	88.617	17	106.627	63	124.390	109	141.908	155	159.180
-28	89.011	18	107.016	64	124.774	110	142.286	156	159.553
-27	89.405	19	107.404	65	125.157	111	142.664	157	159.926
-26	89.799	20	107.793	66	125.540	112	143.042	158	160.298
-25	90.193	21	108.181	67	125.923	113	143.420	159	160.671
-24	90.587	22	108.570	68	126.306	114	143.797	160	161.043
-23	90.980	23	108.958	69	126.689	115	144.175	161	161.415
-22	91.374	24	109.346	70	127.072	116	144.552	162	161.787
-21	91.767	25	109.734	71	127.454	117	144.930	163	162.159
-20	92.160	26	110.122	72	127.837	118	145.307	164	162.531
-19	92.553	27	110.509	73	128.219	119	145.684	165	162.903
-18	92.946	28	110.897	74	128.602	120	146.061	166	163.274
-17	93.339	29	111.284	75	128.984	121	146.438	167	163.646
-16	93.732	30	111.672	76	129.366	122	146.814	168	164.017
-15	94.125	31	112.059	77	129.748	123	147.191	169	164.388
-14	94.517	32	112.446	78	130.130	124	147.567	170	164.760
-13	94.910	33	112.833	79	130.511	125	147.944	171	165.131
-12	95.302	34	113.220	80	130.893	126	148.320	172	165.501
-11	95.694	35	113.607	81	131.274	127	148.696	173	165.872
-10	96.086	36	113.994	82	131.656	128	149.072	174	166.243
-9	96.478	37	114.380	83	132.037	129	149.448	175	166.613
-8	96.870	38	114.767	84	132.418	130	149.824	176	166.984
-7	97.262	39	115.153	85	132.799	131	150.199	177	167.354
-6	97.653	40	115.539	86	133.180	132	150.575	178	167.724
-5	98.045	41	115.925	87	133.561	133	150.950	179	168.095
-4	98.436	42	116.311	88	133.941	134	151.326	180	168.465
-3	98.827	43	116.697	89	134.322	135	151.701	181	168.834
-2	99.218	44	117.083	90	134.702	136	152.076	182	169.204
-1	99.609	45	117.469	91	135.083	137	152.451	183	169.574
0	100.000	46	117.854	92	135.463	138	152.826	184	169.943
1	100.391	47	118.240	93	135.843	139	153.200	185	170.313
2	100.781	48	118.625	94	136.223	140	153.575	186	170.682
3	101.172	49	119.010	95	136.603	141	153.950	187	171.051
4	101.562	50	119.395	96	136.982	142	154.324	188	171.420
5	101.953	51	119.780	97	137.362	143	154.698	189	171.789
6	102.343	52	120.165	98	137.741	144	155.072	190	172.158
7	102.733	53	120.550	99	138.121	145	155.446	191	172.527
8	103.123	54	120.934	100	138.500	146	155.820	192	172.895
9	103.513	55	121.319	101	138.879	147	156.194	193	173.264
10	103.902	56	121.703	102	139.258	148	156.568	194	173.632
11	104.292	57	122.087	103	139.637	149	156.941	195	174.000
12	104.681	58	122.471	104	140.016	150	157.315	196	174.368
13	105.071	59	122.855	105	140.395	151	157.688	197	174.736
14	105.460	60	123.239	106	140.773	152	158.061	198	175.104
15	105.849	61	123.623	107	141.152	153	158.435	199	175.472
16	106.238	62	124.007	108	141.530	154	158.808	200	175.840

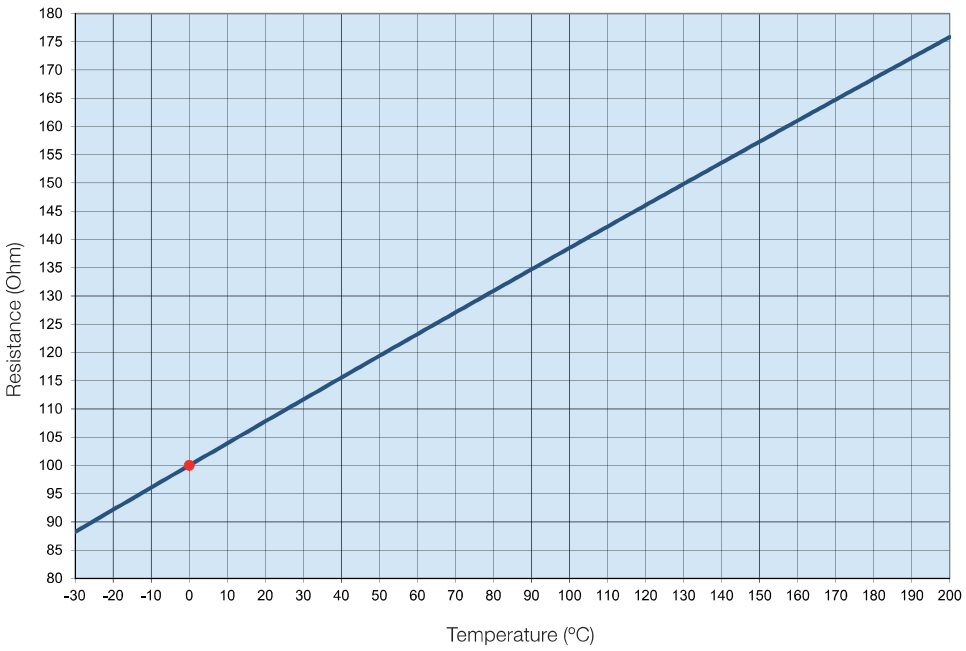

Figure 6.18 *- Ohmic resistance of the Pt-100 x temperature*

6.12. CONNECTION OF THE SPACE HEATERS

Before switching ON the space heaters, check if the space heaters connection have been made according to the connection diagram shown on the space heater nameplate. For motors supplied with dual voltage space heaters (110-127/220-240 V), see Figure 6.19.

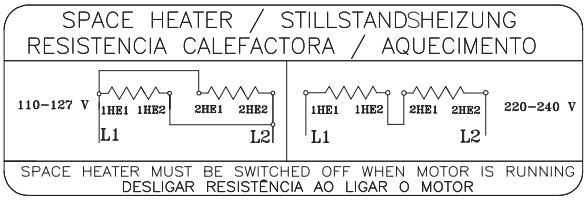

Figure 6.19 *- Dual voltage space heater connection*

The space heaters should never be energized when the motor is in operation.

ENGLISH

6.13. STARTING METHODS

Whenever possible, the motor starting must be Direct On Line (DOL) at rated voltage. This is the most simple and feasible starting method. However, it must only be applied when the starting current does not affect the power supply. Please consider the local electric utility regulations when installing a motor.
High inrush current may result in:
a) high voltage drop in the power supply line creating unacceptable line disturbance on the distribution system;
b) requiring oversized protection system (cables and contactor) increasing the installation costs.

If DOL starting is not allowed due to the reasons mentioned above, an indirect starting method compatible with the load and motor voltage to reduce the starting current may be used.
If reduced voltage starters are used for starting, the motor starting torque will also be reduced.

Table 6.6 shows the possible indirect starting methods that can be used depending on the number of the motor leads.

Table 6.6 *- Starting method x number of motor leads*

Number of leads	Possible starting methods
3 leads	Autotransformer Soft-starter
6 leads	Star-Delta Autotransformer Soft-starter
9 leads	Series/Parallel Part winding Autotransformer Soft-starter
12 leads	Star-Delta Series/Parallel Part winding Autotransformer Soft-starter

Table 6.7 shows examples of possible indirect starting methods to be used according to the voltage indicated on the motor nameplate and the power supply voltage.

Table 6.7 *- Starting methods x voltage*

Nameplate voltage	Operating voltage	Star-delta	Autotransformer starting	Starting by series/ parallel switch	Part-winding starting	Starting by Soft-starter
220/380 V	220 V 380 V	YES NO	YES YES	NO NO	NO NO	YES YES
220/440 V	220 V 440 V	NO NO	YES YES	YES NO	YES NO	YES YES
230/460 V	230 V 460 V	NO NO	YES YES	YES NO	YES NO	YES YES
380/660 V	380 V	YES	YES	NO	NO	YES
220/380/440 V	220 V 380 V 440 V	YES NO YES	YES YES YES	YES YES NO	YES YES NO	YES YES YES

The WQuattro line motors must be started direct on-line (DOL) or driven by a frequency inverter in scalar mode.

6.14. MOTORS DRIVEN BY FREQUENCY INVERTER

The operation with frequency inverter must be stated in the Purchase Order since this drive type may require some changes of the motor design.

Wmagnet Motors must only be driven by WEG frequency inverter.

The frequency inverter used to drive motors up to 690 V must be fitted with Pulse With Modulation (PWM) with vector control.

When a motor is driven by a frequency inverter at lower frequencies than the rated frequency, you must reduce the motor torque to prevent motor overheating. The torque reduction (derating torque) can be found in the item 6.4 of the "Technical Guidelines for Induction Motors driven by PWM Frequency inverters" available on the site www.weg.net.

If the motor is operated above the rated frequency, please note:
- That the motor must be operated at constant output;
- That the motor can supply max. 95% of its rated output;
- Do not exceed the maximum speed and please consider:
  - max. operating frequency stated on the additional nameplate;
  - mechanical speed limitation of the motor.

Information on the selection of the power cables between the frequency inverter and the motor can be found in the item 6.4 of the "Technical Guidelines for Induction Motors driven by PWM Frequency inverters" available at www.weg.net.

6.14.1. Use of dV/dt filter

6.14.1.1. Motor with enameled round wire

Motors designed for rated voltages up to 690 V, when driven by frequency inverter, do not require the use of dV/dT filters, provided that following criteria are considered.

Criteria for the selection of motors with round enameled wire when driven by frequency inverter				
Motor rated votage [1]	**Peak voltage at the motor terminals (max)**	**dV/dt inverter output (max)**	**Inverter Rise Time [2] (min.)**	**MTBP [2] Time between pulses (min)**
Vnom < 460 V	≤ 1600 V	≤ 5200 V/µs	≥ 0,1 µs	≥ 6 µs
460 ≤ Vnom < 575 V	≤ 2000 V	≤ 6500 V/µs		
575 ≤ Vnom ≤ 1000 V	≤ 2400 V	≤ 7800 V/µs		

Notes:
1. For the application of dual voltage motors, example 380/660 V, consider the lower voltage (380 V).
2. Information supplied by the inverter manufacturer.

6.14.1.2. Motor with prewound coils

Motors with prewound coils (medium and high voltage motors regardless of frame sizes, and low voltage motors from IEC 500 / NEMA 800 frame on), designed for the use with frequency inverters, do not require the use of filters, provided they comply with the criteria in Table 6.8.

Table 6.8 *- Criteria to be considered when using motor with prewound coils to be drive by frequency inverters*

Motor rated voltage	**Type of modulation**	**Turn to turn insulation (phase-phase)**		**Phase-ground insulation**	
		Peak voltage at the motor terminals	**dV/dt at the motor terminals**	**Peak voltage at the motor terminals**	**dV/dt at the motor terminals**
690 < Vnom ≤ 4160 V	Sinusoidal	≤ 5900 V	≤ 500 V/µs	≤ 3400 V	≤ 500 V/µs
	PWM	≤ 9300 V	≤ 2700 V/µs	≤ 5400 V	≤ 2700 V/µs
4160 < Vnom ≤ 6600 V	Sinusoidal	≤ 9300 V	≤ 500 V/µs	≤ 5400 V	≤ 500 V/µs
	PWM	≤ 14000 V	≤ 1500 V/µs	≤ 8000 V	≤ 1500 V/µs

6.14.2. Bearing insulation

Only the motors in IEC frame size 400 (NEMA 680) and larger are supplied, as standard, with insulated bearing. If motor must be driven by frequency inverter, insulate the bearing according to Table 6.9.

Table 6.9 *- Recommendation on the bearing insulation for inverter driven motors*

Frame size	Recommendation
IEC 315 and 355 NEMA 445/7 to L5810/11	■ Insulated bearing/end shield ■ Grounding between shaft and frame by grounding brush
IEC 400 and larger NEMA 680 and larger	■ Insulated NDE bearing ■ Grounding between shaft and frame by grounding brush

When motors are supplied with shaft grounding system, monitor the grounding brush constantly during its operation and, when it reaches the end of its useful life, it must be replaced by another brush with the same specification.

6.14.3. Switching frequency

The minimum inverter switching frequency must not be lower than 2.5 kHz and should not exceed 5 kHz.

The non-compliance with the criteria and recommendations indicated in this manual may void the product warranty.

6.14.4. Mechanical speed limitation

Table 6.10 shows the maximum speeds allowed for motors driven by frequency inverter.

Table 6.10 *- Maximum motor speed (in rpm)*

Frame size		DE-bearing	Maximum speed for standard motors
IEC	NEMA		
63-90	143/5	6201 6202 6203 6204 6205	10400
100	-	6206	8800
112	182/4	6207	7600
		6307	6800
132	213/5	6308	6000
160	254/6	6309	5300
180	284/6	6311	4400
200	324/6	6312	4200
225-630	364/5-9610	6314	3600
		6315	3600
		6316	3200
		6319	3000
		6218	3600
		6220	3600
		6320	2200
		6322	1900
		6324	1800
		6328	1800
		6330	1800
		6224	1800
		6228	1800

Note:
To select the maximum allowed motor speed, consider the motor torque derating curve.

For more information on the application of frequency inverters, contact WEG or check the “Technical Guidelines for Induction Motors driven by PWM Frequency inverters” available at www.weg.net.

7. COMMISSIONING

7.1. INITIAL START-UP

After finishing the installation procedures and before starting the motor for the first time or after a long period without operation, the following items must be checked:

- If the nameplate data (voltage, current, connection diagram, degree of protection, cooling system, service factor, etc.) meet the application requirements;
- If the machine set (motor + driven machine) has been mounted and aligned correctly;
- If the motor driving system ensures that the motor speed does not exceed the max. allowed speed indicated in Table 6.10;
- Measure the winding insulation resistance, making sure it complies with the specified values in item 5.4;
- Check the motor rotation direction;
- Inspect the motor terminal box for damage and ensure that it is clean and dry and all contacts are rust-free, the seals are in perfect operating conditions and all unused threaded holes are properly closed thus ensuring the degree of protection indicated on the motor nameplate;
- Check if the motor wiring connections, including grounding and auxiliary equipment connection, have been carried out properly and are in accordance with the recommendations in item 6.9;
- Check the operating conditions of the installed auxiliary devices (brake, encoder, thermal protection device, forced cooling system, etc.);
- Check bearing operating conditions. If the motors are stored and/or installed for more than two years without running, it is recommended to change the bearings, or to remove, wash, inspect and relubricate them before the motor is started. If the motor is stored and/or installed according to the recommendations described in item 5.3, lubricate the bearings as described in item 8.2. For the bearing condition evaluation, it is recommended to use of the vibration analysis techniques: Envelope Analysis or Demodulation Analysis.
- For roller bearing motors with oil lubrication, ensure:
  - The oil level should be in the center of the sight glass (see Figure 8.1 and 8.2);
  - That if the motor is stored for a period equal or longer than the oil change interval, the oil must be changed before starting the motor.
- When motors are fitted with sleeve bearings, ensure:
  - Correct oil level for the sleeve bearing. The oil level should be in the center of the sight glass (see Figure 8.3);
  - That the motor is not started or operated with axial or radial loads;
  - That if the motor is stored for a period equal or longer than the oil change interval, the oil must be changed before starting the motor.
- Inspect the capacitor operating condition, if any. If motors are installed for more than two years, but were never commissioned, it is recommended to change the start capacitors since they lose their operating characteristics;
- Ensure that the air inlet and outlet opening are not blocked. The minimum clearance to the nearest wall (L) should be at least ¼ of the fan cover diameter (D), see Figure 7.1. The intake air temperature must be at ambient temperature.

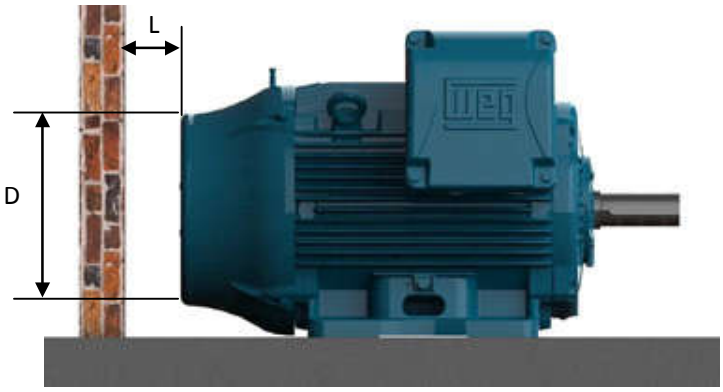

Figure 7.1- *Minimum clearance to the wall*

Please consider the minimum distances shown in the Table 7.1 as reference value;

Table 7.1 *- Minimum distance between the fan cover and wall*

Frame size		Distance between the fan cover and the wall (L)	
IEC	**NEMA**	**mm**	**inches**
63	-	25	0.96
71	-	26	1.02
80	-	30	1.18
90	143/5	33	1.30
100	-	36	1.43
112	182/4	41	1.61
132	213/5	50	1.98
160	254/6	65	2.56
180	284/6	68	2.66
200	324/6	78	3.08
225 250	364/5 404/5	85	3.35
280	444/5 445/7 447/9	108	4.23
315	L447/9 504/5 5006/7/8 5009/10/11	122	4.80
355	586/7 588/9 5807/8/9 5810/11/12	136	5.35
400	6806/7/8 6809/10/11	147	5.79
450	7006/10	159	6.26
500	8006/10	171	6.73
560	8806/10	185	7.28
630	9606/10	200	7.87

- Ensure correct water flow rate and water temperature when water cooled motors are used. See item 7.2;
- Ensure that all rotating parts, such as pulleys, couplings, external fans, shaft, etc. are protected against accidental contact.

Other tests and inspections not included in the manual may be required, depending on the specific installation, application and/or motor characteristics.

After all previous inspections have been carried out, proceed as follows to start the motor:

- Start the motor on no-load (if possible) and check the motor direction of rotation. Check for the presence of any abnormal noise, vibration or other abnormal operating conditions;
- Ensure the motor starts smoothly. If any abnormal operating condition is noticed, switch off the motor, check the assembly system and connections before the motor is started again;
- If excessive vibrations are noticed, check if the motor mounting bolts are well tightened or if the vibrations are not generated and transmitted from adjacent installed equipment. Check the motor vibration periodically and ensure that the vibration limits are as specified in item 7.2.1;
- Start the motor at rated load during a short time and compare the operating current with the rated current indicated on the nameplate;
- Continue to measure the following motor variables until thermal equilibrium is reached: current, voltage, bearing and motor frame temperature, vibration and noise levels;
- Record the measured current and voltage values on the Installation Report for future comparisons.

As induction motors have high inrush currents during start-up, the acceleration of high inertia load requires an extended starting time to reach full speed resulting in fast motor temperature rise. Successive starts within short intervals will result in winding temperature increases and can lead to physical insulation damage reducing the useful life of the insulation system. If the duty cycle S1 / CONT. is specified on the motor nameplate, this means that the motor has been designed for:

- Two successive starts: first start from cold condition, i. e., the motor windings are at room temperature and the second start immediately after the motor stops;
- One start from hot condition, i. e., the motor windings are at rated temperature.

The Troubleshooting Chart in section 10 provides a basic list of unusual cases that may occur during motor operation with the respective corrective actions.

7.2. OPERATING CONDITIONS

Unless otherwise stated in the Purchase Order, electric motors are designed and built to be operated at altitudes up to 1000 meters above sea level and in a temperature range from -20 °C to +40 °C. Any deviation from the normal condition of motor operation must be stated on the motor nameplate. Some components must be changed if the ambient temperature is different from the specified one. Please contact WEG to check the required special features.

For operating temperatures and altitudes differing from those above, the factors indicated in Table 7.2 must be applied to the nominal motor power rating in order to determine the derated available output (Pmax = Pnom x correction factor).

***Table 7.2** - Correction factors for altitude and ambient temperature*

T (°C)	Altitude (m)								
	1000	1500	2000	2500	3000	3500	4000	4500	5000
10							0.97	0.92	0.88
15						0.98	0.94	0.90	0.86
20					1.00	0.95	0.91	0.87	0.83
25				1.00	0.95	0.93	0.89	0.85	0.81
30			1.00	0.96	0.92	0.90	0.86	0.82	0.78
35		1.00	0.95	0.93	0.90	0.88	0.84	0.80	0.75
40	1.00	0.97	0.94	0.90	0.86	0.82	0.80	0.76	0.71
45	0.95	0.92	0.90	0.88	0.85	0.81	0.78	0.74	0.69
50	0.92	0.90	0.87	0.85	0.82	0.80	0.77	0.72	0.67
55	0.88	0.85	0.83	0.81	0.78	0.76	0.73	0.70	0.65
60	0.83	0.82	0.80	0.77	0.75	0.73	0.70	0.67	0.62
65	0.79	0.76	0.74	0.72	0.70	0.68	0.66	0.62	0.58
70	0.74	0.71	0.69	0.67	0.66	0.64	0.62	0.58	0.53
75	0.70	0.68	0.66	0.64	0.62	0.60	0.58	0.53	0.49
80	0.65	0.64	0.62	0.60	0.58	0.56	0.55	0.48	0.44

Motors installed inside enclosures (cubicles) must be ensured an air renewal rate in the order of one cubic meter per second for each 100 kW installed power or fraction of installed power. Totally Enclosed Air Over motors - TEAO (fan and exhaust / smoke extraction) are supplied without cooling fan and the manufacturer of the driven machine is responsible for sufficient motor cooling. If no minimum required air speed between motor fins is indicated on the motor nameplate, ensure the air speed indicated in the table 7.3 is provided. The values shown in Table 7.3 are valid for 60 Hz motors. To obtain the minimum air speed for 50 Hz motors, multiply the values in the table by 0.83.

***Table 7.3** - Minimum required air speed between motor fins (metres/second)*

Frame		Poles			
IEC	NEMA	2	4	6	8
63 to 90	143/5	13	7	5	4
100 to 132	182/4 to 213/5	18	12	8	6
160 to 200	254/6 to 324/6	20	15	10	7
225 to 280	364/5 to 444/5	22	20	15	12
315 to 450	445/7 to 7008/9	25	25	20	15

The voltage and frequency variations may affect the performance characteristics and the electromagnetic compatibility of the motor. The power supply variations should not exceed the values specified in the applicable standards. Examples:

- ABNT NBR 17094 - Parts 1 and 2. The motor has been designed to supply the rated torque for a combined variation in voltage and frequency:
  - Zone A: ±5% of the rated voltage and ±2% of the rated frequency;
  - Zone B: ±10% of the rated voltage and +3% -5% of the rated frequency.

When operated continuously in Zone A or B, the motor may show performance variations and the operating temperature may increase considerably. These performance variations will be higher in Zone B. Thus it is not recommended to operate the motor in Zone B during extended periods.

- IEC 60034-1. The motor has been designed to supply the rated torque for combined variation in voltage and frequency:
  - Zone A: ±5% of the rated voltage and ±2% of the rated frequency;
  - Zone B: ±10% of the rated voltage and +3% -5% of the rated frequency.

When operated continuously in Zone A or B, the motor may show performance variations and the operating temperature may increase considerably. These performance variations will be higher in Zone B. Thus it is not recommended to operate the motor in Zone B during extended periods. For multivoltage motors (example 380-415/660 V), a ±5% voltage variation from the rated voltage is allowed.

- NEMA MG 1 Part 12. The motor has been designed to be operated in one of the following variations:
  - ±10% of the rated voltage, with rated frequency;
  - ±5% of the rated frequency, with rated voltage;
  - A combined variation in voltage and frequency of ±10%, provided the frequency variation does not exceed ±5%.

If the motor is cooled by ambient air, clean the air inlet and outlet openings and cooling fins at regular intervals to ensure a free airflow over the frame surface. The hot air should never be returned to the motor. The cooling air must be at room temperature limited to the temperature range indicated on the motor nameplate (if no room temperature is specified, please consider a temperature range between -20 °C and +40 °C).

Table 7.4 shows the minimum required water flow for water cooled motors considering the different frame sizes and the maximum allowed temperature rise of the cooling water after circulating through the motor. The inlet water temperature should not exceed 40 °C.

Table 7.4 *- Minimum required water flow and the maximum allowed temperature rise of the cooling water after circulating through the motor*

Frame size		Flow rate (litres/minute)	Maximum allowed water temperature rise (°C)
IEC	NEMA		
180	284/6	12	5
200	324/6	12	5
225	364/5	12	5
250	404/5	12	5
280	444/5 445/7 447/9	15	6
315	504/5	16	6
355	586/7 588/9	25	6

Motors fitted with oil mist lubrication systems can be operated continuously for a maximum of one hour after the failure of the oil pumping system.

Considering the sun's heat increases the operating temperature, externally mounted motors should always be protected from direct sunlight exposure.

Each and every deviation from the normal operating condition (tripping of the thermal protection, noise and vibration level increase, temperature and current rise) should be investigated and corrected by WEG Authorized Service Centers.

Motors fitted with cylindrical roller bearings require a minimum radial load to ensure a normal operation. For information regarding the radial preload, please contact WEG.

7.2.1.Limits of vibration

The vibration severity is the maximum vibration value measured at all positions and in all directions as recommended in the standard IEC 60034-14. Table 7.5 specifies the limits of the maximum vibrations magnitudes according to standard IEC 60034-14 for shaft heights IEC 56 to 400, for vibrations grades A and B. The vibration severity limits in Table 7.5 are given as RMS values (Root Mean Square values or effective values) of the vibration speed in mm/s measured in free suspension condition.

Table 7.5 *- Recommended limits for the vibration severity according to standard IEC 60034-14*

Shaft height [mm]	56 ≤ H ≤ 132	132 ≤ H ≤ 280	H > 280
Vibration grade	Vibration severity on elastic base [mm/s RMS]		
A	1.6	2.2	2.8
B	0.7	1.1	1.8

Notes:
1 - The values in Table 7.5 are valid for measurements carried out with decoupled machines (without load) operated at rated voltage and frequency.
2 - The values in Table 7.5 are valid regardless of the direction of rotation of the machine.
3 - The values in Table 7.5 are not applicable to single-phase motors, three-phase motors powered by a single-phase system or to machines mounted in situ or coupled with inertia flywheels or to loads.

According to NEMA MG 1, the allowed vibration limit for standard motors is 0.15 in/s (peak vibration in in/s).

Note:
For the load operation condition, the use of the standard ISO 10816-3 is recommended for evaluating the motor vibration limits. In the load condition the motor vibration will be influenced by several factors, such as, type of the coupled load, condition of the motor fixation, alignment condition under load, structure or base vibration due to other equipments, etc..

8. MAINTENANCE

The purpose of the maintenance is to extend the useful life of the equipment. The non-compliance with one of these previous items can cause unexpected machine failures.

If motors with cylindrical roller or angular contact bearings are to be transported during the maintenance procedures, the shaft locking device must always be fitted. All HGF motors, regardless of the bearing type, must always be transported with the shaft locking device fitted.

All repairs, disassembly and assembly related services must be carried out only by qualified and well-trained personnel by using proper tools and techniques. Make sure that the machine has stopped and it is disconnected from the power supply, including the accessory devices (space heater, brake, etc.), before any servicing is undertaken.
The company does not assume any responsibility or liability for repair services or maintenance operations executed by non-authorized Service Centers or by non qualified service personnel. The company shall have no obligation or liability whatsoever to the buyer for any indirect, special, consequential or incidental loss or damage caused or arising from the company's proven negligence

8.1. GENERAL INSPECTION

The inspection intervals depend on the motor type, application and installation conditions. Proceed as follows during inspection:

- Visually inspect the motor and coupling. Check if abnormal noises, vibrations, excessive heating, wear signs, misalignment or damaged parts are noticed. Replace the damaged parts as required;
- Measure the insulation resistance according to the item 5.4;
- Clean the motor enclosure. Remove oil spills and dust accumulation from the motor frame surface to ensure a better heat transfer to the surrounding ambient;
- Check cooling fan condition and clean the air inlet & outlet openings to ensure a free air flow over the motor;
- Investigate the actual condition of the seals and replace them, if required;
- Drain the condensed water from inside the motor. After draining, reinstall the drain plugs to ensure the degree of protection as indicated on the motor nameplate. The motor must always be positioned so the drain hole is at the lowest position (see item 6);
- Check the connections of the power supply cables, ensuring the correct clearance distance between live and grounded parts, as specified in Table 6.3;
- Check if the tightening torque of the bolted connections and mounting bolts meets the tightening torque specified in Table 8.11;
- Check the status of the cable passages, the cable gland seals and the seals inside the terminal box and replace them, if required;
- Check the bearing operating conditions. Check for the presence of any abnormal noise, vibration or other abnormal operating conditions, like motor temperature rise. Check the oil level, the lube oil condition and compare the workings hours with the informed life time;
- Record and file all changes performed on the motor.



Do not reuse damaged or worn parts. Damaged or worn parts must be replaced by parts supplied by the manufacturer and must be installed as if they were the original parts.

8.2. LUBRICATION

Proper lubrication plays a vital role in the motor performance. Only use the grease or oil types, amounts and lubrication intervals recommended for the bearings. This information is available on the motor nameplate and the lubrication procedures must be carried out according to the type of lubricant (oil or grease).
When the motor is fitted with thermal protection devices for bearing temperature control, consider the operating temperature limits shown in Table 6.4.
The maximum operating temperature of motors used in special applications may differ from those shown in Table 6.4. The grease and oil disposal should be made in compliance with applicable laws in each country.



Please contact WEG when motors are to be installed in special environments or used for special applications.

8.2.1. Grease lubricated rolling bearings

Excess grease causes bearing overheating, resulting in bearing failure.

The lubrication intervals specified in Table 8.1, Table 8.2, Table 8.3, Table 8.4, Table 8.5, Table 8.6, Table 8.7 and Table 8.8 consider an absolute temperature on the bearing of 70 °C (up to frame size IEC 200 / NEMA 324/6) and 85 °C (for frame size IEC 225 / NEMA 364/5 and above), the motor running at rated speed, a motor mounted in horizontal position and greased with Mobil Polyrex EM grease. Any variation of the parameters listed above must be evaluated.

Table 8.1 *- Lubrication intervals for ball bearings*

Frame		Poles	Bearing designation	Amount of grease (g)	Lubrication intervals (hours)					
					ODP (Open Drip Proof)		W21 TEFC (Totally Enclosed Fan Cooled)		W22 TEFC (Totally Enclosed Fan Cooled)	
IEC	NEMA				50 Hz	60 Hz	50 Hz	60 Hz	50 Hz	60 Hz
90	143/5	2	6205	4	-	-	20000	20000	25000	25000
		4								
		6								
		8								
100	-	2	6206	5	-	-	20000	20000	25000	25000
		4								
		6								
		8								
112	182/4	2	6207/ 6307	9	-	-	20000	20000	25000	25000
		4								
		6								
		8								
132	213/5	2	6308	11	-	-	20000	18400	25000	23200
		4					20000	20000	25000	25000
		6								
		8								
160	254/6	2	6309	13	20000	20000	18100	15700	22000	20000
		4					20000	20000	25000	25000
		6								
		8								
180	284/6	2	6311	18	20000	20000	13700	11500	17000	14000
		4					20000	20000	25000	25000
		6								
		8								
200	324/6	2	6312	21	20000	20000	11900	9800	15000	12000
		4					20000	20000	25000	25000
		6								
		8								
225 250 280 315 355	364/5 404/5 444/5 445/7 447/9 L447/9 504/5 5008 5010/11 586/7 588/9	2	6314	27	18000	14400	4500	3600	5000	4000
		4			20000	20000	11600	9700	14000	12000
		6					16400	14200	20000	17000
		8					19700	17300	24000	20000
		2	6316	34	14000	*Upon request	3500	*Upon request	4000	*Upon request
		4			20000	20000	10400	8500	13000	10000
		6					14900	12800	18000	16000
		8					18700	15900	20000	20000
		2	6319	45	*Upon request					
		4			20000	20000	9000	7000	11000	8000
		6					13000	11000	16000	13000
		8					17400	14000	20000	17000
		4	6322	60	20000	20000	7200	5100	9000	6000
		6					10800	9200	13000	11000
		8					15100	11800	19000	14000

Table 8.2 - *Lubrication intervals for cylindrical roller bearings*

Frame		Poles	Bearing designation	Amount of grease (g)	LUBRICATION INTERVALS (hours)					
					ODP (Open Drip Proof)		W21 TEFC (Totally Enclosed Fan Cooled)		W22 TEFC (Totally Enclosed Fan Cooled)	
IEC	NEMA				50 Hz	60 Hz	50 Hz	60 Hz	50 Hz	60 Hz
160	254/6	2	NU309	13	20000	19600	13300	9800	16000	12000
		4				20000	20000	20000	25000	25000
		6								
		8								
180	284/6	2	NU311	18	18400	12800	9200	6400	11000	8000
		4			20000	20000	20000	19100	25000	25000
		6						20000		
		8								
200	324/6	2	NU312	21	15200	10200	7600	5100	9000	6000
		4			20000	20000	20000	17200	25000	21000
		6						20000		25000
		8								
225 250 280 315 355	364/5 404/5 444/5 445/7 447/9 L447/9 504/5 5008 5010/11 586/7 588/9	4	NU314	27	17800	14200	8900	7100	11000	9000
		6			20000	20000	13100	11000	16000	13000
		8					16900	15100	20000	19000
		4	NU316	34	15200	12000	7600	6000	9000	7000
		6			20000	19000	11600	9500	14000	12000
		8				20000	15500	13800	19000	17000
		4	NU319	45	12000	9400	6000	4700	7000	5000
		6			19600	15200	9800	7600	12000	9000
		8			20000	20000	13700	12200	17000	15000
		4	NU322	60	8800	6600	4400	3300	5000	4000
		6			15600	11800	7800	5900	9000	7000
		8			20000	20000	11500	10700	14000	13000

Table 8.3 - *Lubrication intervals for ball bearings - HGF line*

Frame		Poles	Bearing designation	Amount of grease (g)	Lubrication intervals (hours)	
IEC	NEMA				50 Hz	60 Hz
315L/A/B and 315C/D/E	5006/7/8T and 5009/10/11T	2	6314	27	3100	2100
		4 - 8	6320	50	4500	4500
			6316	34	4500	4500
355L/A/B and 355C/D/E	5807/8/9T and 5810/11/12T	2	6314	27	3100	2100
		4 - 8	6322	60	4500	4500
			6319	45	4500	4500
400L/A/B and 400 C/D/E	6806/7/8T and 6809/10/11T	2	6315	30	2700	1800
		4 - 8	6324	72	4500	4500
			6319	45	4500	4500
450	7006/10	2	6220	31	2500	1400
		4	6328	93	4500	3300
			6322	60	4500	4500
		6 - 8	6328	93	4500	4500
			6322	60	4500	4500
500	8006/10	4	6330	104	4200	2800
			6324	72	4500	4500
		6 - 8	6330	104	4500	4500
			6324	72	4500	4500
500	8006/10	4	6330	104	4200	2800
			6324	72	4500	4500
		6 - 8	6330	104	4500	4500
			6324	72	4500	4500
560	8806/10	4 - 8	*Upon request			
630	9606/10	4 - 8				

ENGLISH

Table 8.4 - *Lubrication intervals for cylindrical roller bearings - HGF line*

Frame		Poles	Bearing designation	Amount of grease (g)	Lubrication intervals (hours)	
IEC	NEMA				50 Hz	60 Hz
315L/A/B and 315C/D/E	5006/7/8 and 5009/10/11	4	NU320	50	4300	2900
		6 - 8			4500	4500
355L/A/B and 355C/D/E	5807/8/9 and 5810/11/12	4	NU322	60	3500	2200
		6 - 8			4500	4500
400L/A/B and 400C/D/E	6806/7/8 and 6809/10/11	4	NU324	72	2900	1800
		6 - 8			4500	4500
450	7006/10	4	NU328	93	2000	1400
		6			4500	3200
		8			4500	4500
500	8006/10	4	NU330	104	1700	1000
		6			4100	2900
		8			4500	4500
560	8806/10	4	NU228 + 6228	75	2600	1600
		6 - 8		106	4500	4500
630	9606/10	4	NU232 + 6232	92	1800	1000
		6		120	4300	3100
		8		140	4500	4500

Tabela 8.5 - *Lubrication intervals for ball bearings - W50 line*

	Frame		Poles	D.E. Bearing	Amount of grease (g)	50 Hz (h)	60 Hz (h)	N.D.E. Bearing	Amount of grease (g)	50 Hz (h)	60 Hz (h)
	IEC	NEMA									
Horizontal mounting Ball bearings	315 H/G	5009/10	2	6314	27	4500	3500	6314	27	4500	3500
			4 - 8	6320	50		4500	6316	34		4500
	355 J/H	5809/10	2	6314	27		3500	6314	27		3500
			4 - 8	6322	60		4500	6319	45		4500
	400 L/K and 400 J/H	6806/07 and 6808/09	2	6218	24	3800	2500	6218	24	3800	1800
			4 - 8	6324	72	4500	4500	6319	45	4500	4500
	450 L/K and 450 J/H	7006/07 and 7008/09	2	6220	31	3000	2000	6220	31	3000	2000
			4	6328	93	4500	3300	6322	60	4500	4500
			6 - 8				4500				
Vertical mounting Ball bearings	315 H/G	5009/10	2	7314	27	2500	1700	6314	27	2500	1700
			4	6320	50	4200	3200	6316	34	4500	4500
			6 - 8			4500	4500				
	355 J/H	5809/10	2	7314	27	2500	1700	6314	27	2500	1700
			4	6322	60	3600	2700	6319	45	4500	3600
			6 - 8			4500	4500				4500
	400 L/K and 400 J/H	6806/07 and 6808/09	2	7218	24	2000	1300	6218	24	2000	1300
			4	7324	72	3200	2300	6319	45	4500	3600
			6			4500	4300				4500
			8				4500				
	450 L/K and 450 J/H	7006/07 and 7008/09	2	7220	31	1500	1000	6220	31	1500	1000
			4	7328	93	2400	1700	6322	60	3500	2700
			6			4100	3500			4500	4500
			8			4500	4500				

Tabela 8.6 - *Lubrication intervals for cylindrical roller bearings - W50 line*

	Frame		Poles	D.E. Bearing	Amount of grease (g)	50 Hz (h)	60 Hz (h)	N.D.E. Bearing	Amount of grease (g)	50 Hz (h)	60 Hz (h)
	IEC	NEMA									
Horizontal mounting Roller bearings	315 H/G	5009/10	4	NU320	50	4300	2900	6316	34	4500	4500
			6 -8			4500	4500				
	355 J/H	5809/10	4	NU322	60	3500	2200	6319	45		
			6 - 8			4500	4500				
	400 L/K and 400 J/H	6806/07 and 6808/09	4	NU324	72	2900	1800				
			6 - 8			4500	4500				
	450 L/K and 450 J/H	7006/07 and 7008/09	4	NU328	93	2000	1400	6322	60		
			6			4500	3200				
			8				4500				

Tabela 8.7 - Lubrication intervals for ball bearings - W40 line

	Frame		Poles	D.E. Bearing	Amount of grease (g)	50 Hz (h)	60 Hz (h)	N.D.E. Bearing	Amount of grease (g)	50 Hz (h)	60 Hz (h)
	IEC	NEMA									
Horizontal mounting Ball bearings	315G/F	5010/11	2	6314	27	4500	4500	6314	27	4500	4500
			4 - 8	6319	45	4500	4500	6314	27	4500	4500
	355 J/H	L5010/11	2	6218	24	4500	4500	6218	24	4500	4500
			4 – 8	6224	43	4500	4500	6218	24	4500	4500
	400 J/H	L5810/11	2	6220	31	4500	3800	6220	31	4500	3800
			4 – 8	6228	52	4500	4500	6220	31	4500	4500
	450 K/J	L6808/09	2	6220	31	4500	3800	6220	31	4500	3800
			4 – 8	6228	52	4500	4500	6220	31	4500	4500

Tabela 8.8 - Lubrication intervals for cylindrical roller bearings - W40 line

	Frame		Poles	D.E. Bearing	Amount of grease (g)	50 Hz (h)	60 Hz (h)	N.D.E. Bearing	Amount of grease (g)	50 Hz (h)	60 Hz (h)
	IEC	NEMA									
Horizontal mounting Roller bearings	315G/F	5010/11	4 - 8	NU319	45	4500	4500	6314	27	4500	4500
	355 J/H	L5010/11	4 – 8	NU224	43	4500	4500	6218	24	4500	4500
	400 J/H	L5810/11	4 – 8	NU228	52	4500	3300	6220	31	4500	4500
	450 K/J	L6808/09	4 – 8	NU228	52	4500	3300	6220	31	4500	4500

For each increment of 15 °C above the bearing temperature, the relubrication intervals given in the Table must be halved. The relubrication interval of motors designed by the manufacturer for mounting in horizontal position, but installed in vertical position (with WEG authorization), must be halved.
For special applications, such as: high and low temperatures, aggressive environments, driven by frequency inverter (VFD - frequency inverter), etc., please contact WEG about the required amount of grease and the relubrication intervals.

8.2.1.1. Motor without grease fitting

Motors without grease fittings must be lubricated in accordance with the existing Maintenance Plan. Motor disassembly must be carried out as specified in Item 8.3. If motors are fitted with shielded bearings (for example, ZZ, DDU, 2RS, VV), these bearings must be replaced at the end of the grease service life.

8.2.1.2. Motor with grease fitting

To lubricate the bearings with the motor stopped, proceed as follows:
- Before lubricating, clean the grease nipple and immediate vicinity thoroughly;
- Lift grease inlet protection;
- Remove the grease outlet plug;
- Pump in approximately half of the total grease indicated on the motor nameplate and run the motor for about 1 (one) minute at rated speed;
- Switch-off the motor and pump in the remaining grease;
- Lower again the grease inlet protection and reinstall the grease outlet protection.

To grease the motor while running, proceed as follows:
- Before lubricating, clean the grease nipple and immediate vicinity thoroughly;
- Pump the total grease indicated on the motor nameplate;
- Lower again the grease inlet protection.



For lubrication, use only manual grease gun.

If Motors are provided with a spring device for grease removal, the grease excess must be removed by pulling the rod and cleaning the spring until the spring does not remove more grease.

8.2.1.3. Compatibility of the Mobil Polyrex EM grease with other greases

The Mobil Polyrex EM grease has a polyurea thickener and a mineral oil and it is not compatible with other greases.
If you need another type of grease, contact WEG.
It is not recommended to mix different types of greases. In such a case, clean the bearings and lubrication channels before applying new grease.
The used grease must have in its formulation corrosion and oxidation inhibitors.

8.2.2. Oil lubricated bearings

To change the oil of oil lubricated motor proceed as follows:
- Switch-off the motor;
- Remove threaded oil drain plug;
- Open the valve and drain the oil;
- Close the drain valve again;
- Reinstall the threaded oil drain plug;
- Fill-up with the type and amount of oil as specified on the nameplate;
- Check oil level. The oil level is OK when the lubricant can be viewed approximately in the center of the sight glass;
- Reinstall oil inlet plug;
- Check for oil leaks and ensure that all not used threaded plugs are closed with plugs.

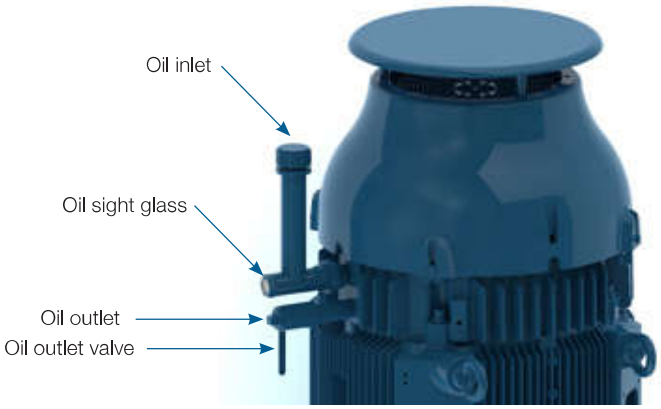

Figure 8.1 *- Oil lubricated bearing - vertical mounting*

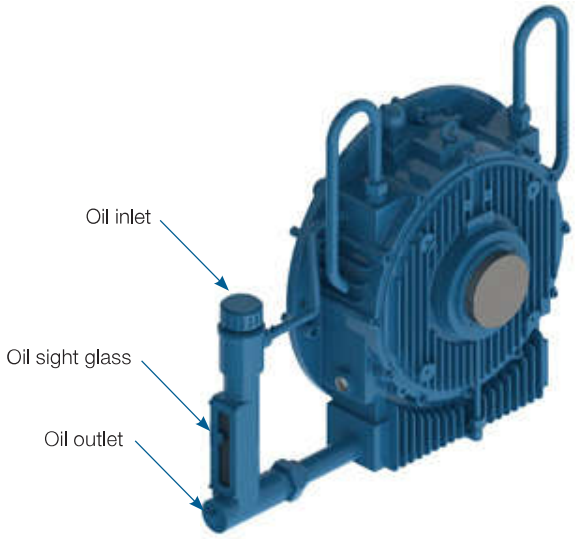

Figure 8.2 *- Oil lubricated bearing - horizontal mounting*

The bearing lubricating oil must be replaced as specified on the nameplate or whenever changes in the oil properties are noticed. The oil viscosity and pH must be checked periodically. The oil level must be checked every day and must be kept in the center of the sight glass.
Please contact WEG, when oils with different viscosities should be used.

Note:
The HGF vertical mounted motors with high axial thrust are supplied with grease lubricated DE-bearings and with oil lubricated NDE-bearings. The DE-bearings must be lubricated according to recommendations in item 8.2.1. Table 8.9 specifies the oil type and the amount of oil required for this motor lubrication.

***Table 8.9** - Oil properties for HGF vertical mounted motors with high axial thrust*

Mounting - high axial thrust	Frame		Poles	Bearing designation	Oil (liters)	Interval (h)	Lubricant	Lubricant specification
	IEC	NEMA						
	315L/A/B e 315C/D/E	5006/7/8T e 5009/10/11T	4 - 8	29320	20	8000	FUCHS Renolin DTA 40 / Mobil SHC 629	ISO VG150 mineral oil with antifoam and antioxidant additives
	355L/A/B e 355C/D/E	5807/8/9T e 5810/11/12T	4 - 8	29320	26			
	400L/A/B e 400C/D/E	6806/7/8T e 6809/10/11T	4 - 8	29320	37			
	450	7006/10	4 - 8	29320	45			

8.2.3. Oil mist lubricated bearings

Check the service conditions of the seals and if replacement is required use only original components. Clean the seal components before assembly (bearing caps, end shields, etc.).
Apply joint sealant between the bearing caps and end shields. The joint sealant must be compatible with the used lubricating oil. Connect the oil lubricant tubes (oil inlet and oil outlet tubes and motor drain tube), as shown in Figure 6.12.

8.2.4. Sleeve bearings

The lubricating oil of sleeve bearings must be changed at the intervals specified in Table 8.10. To replace the oil, proceed as follows:

- NDE-bearing: remove the protection plate from the fan cover;
- Drain the oil through the drain hole located at the bottom of the bearing (see Figure 8.3);
- Close the oil drain hole;
- Remove the oil inlet plug;
- Fill the sleeve bearing with the specified oil and with the amount of oil specified in;
- Check the oil level and ensure it is kept close to the center of the sight glass;
- Install the oil inlet plug;
- Check for oil leaks.

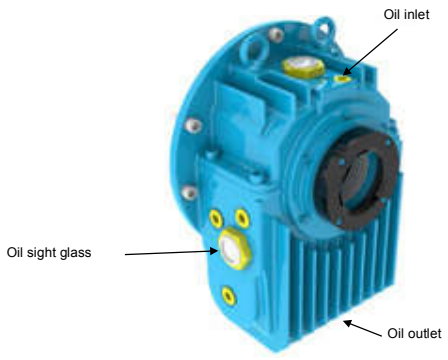

***Figure 8.3** - Sleeve bearing*

Table 8.10 - *Oil properties for sleeve bearings*

Frame		Poles	Bearing designation	Oil (liters)	Interval (h)	Lubricant	Lubricant specification
IEC	NEMA						
315	5000	2	9-80	2.8	8000	FUCHS Renolin DTA 10	ISO VG32 mineral oil with antifoam and antioxidant additives
355	5800						
400	6800						
450	7000						
315	5000	4 - 8	9-90	2.8	8000	FUCHS Renolin DTA 15	ISO VG46 mineral oil with antifoam and antioxidant additives
355	5800		9-100				
400	6800		11-110	4.7			
450	7000		11-125				
500	8000						

The lubricating oil must be replaced as specified on the nameplate or whenever changes on the oil properties are noticed. The oil viscosity and pH must be checked periodically. The oil level must be checked every day and kept in the center of the sight glass.
Please contact WEG, when oils with different viscosities are to be used.

8.3. MOTOR ASSEMBLY AND DISASSEMBLY

All repair services on motors should be always performed by qualified personnel and in accordance with the applicable laws and regulations in each country. Always use proper tools and devices for motor disassembly and assembly.

Disassembly and assembly services can be carried out only after the motor has been disconnected from the power supply and is completely stopped.

Dangerous voltages may be present at the motor terminals inside the terminal box since capacitors can retain electrical charge for long periods of time even when they are not connected directly to a power source or when space heaters are connected to the motor or when the motor windings are used as space heaters. Dangerous voltages may be present at the motor terminals when they are driven by frequency inverter even when they are completely stopped.

Record the installation conditions such as terminal connection diagram, alignment / leveling conditions before starting the disassembly procedures. These records should be considered for later assembly.

Disassemble the motor carefully without causing scratches on machined surfaces or damaging the threads.

Assemble the motor on a flat surface ensuring a good support base. Footless motors must be fixed/locked on the base to prevent accidents.

Handle the motor carefully to not damage the insulated components such as windings, insulated rolling bearings, power cables etc..

Seal elements, such as joint seals and bearing seals should always be replaced when wear or damage is noticed.
Motors with degree of protection higher than IP55 are supplied with joint and screw seal Loctite 5923 (Henkel) Clean the components and apply a new coat of Loctite 5923 on the surfaces before assembly.

For the W50 and HGF motor lines provided with axial fans, the motor and the axial fan have different markings for indicating the direction of rotation for prevent incorrect assembly.
The axial fan must be assembled so that the indicative arrow for direction of rotation is always visible, viewing the non-drive end side. The marking indicated on the axial fan blade, CW for clockwise direction of rotation or CCW for counterclockwise direction of rotation, indicates the direction of rotation of the motor viewing the drive end side.

8.3.1. Terminal box

Proceed as follows to remove the terminal box cover and to disconnect/connect the power supply cables and the cables of the accessory devices:

- Ensure that during the screw removal the terminal box cover does not damage the components installed inside the terminal box;
- If the terminal box cover is fitted with lifting eyebolt, lift the terminal box cover always by its lift eyebolt;
- If motors are supplied with terminal blocks, ensure the correct tightening torque on the motor terminals as specified in Table 8.11;
- Ensure that the cables do not contact sharp edges;
- Ensure that the original IP degree of protection is not changed and is maintained as indicate on the motor nameplate. The power supply cables and the control cables must always be fitted with components (cable glands, conduits) that meet the applicable standards and regulations of each country;
- Ensure that the pressure relief device is in perfect operating condition, if provided. The seals in the terminal box must be in perfect condition for reuse and must be reinstalled correctly to ensure the specified degree of protection;
- Ensure the correct tightening torque for the securing bolts of the terminal box cover as specified in Table 8.11.

Table 8.11 *- Tightening torque for the securing bolts [Nm]*

Screw type and seal	M4	M5	M6	M8	M10	M12	M14	M16	M20
Hex bolt/hex socket bolt (rigid joint)	-	3,5 to 5	6 to 9	14 to 20	28 to 40	45 to 70	75 to 110	115 to 170	230 to 330
Combined slotted screw (rigid joint)	1,5 to 3	3 to 5	5 to 10	10 to 18	-	-	-	-	-
Hex bolt/hex socket bolt (flexible joint)	-	3 to 5	4 to 8	8 to 15	18 to 30	25 to 40	30 to 45	35 to 50	-
Combined slotted screw (flexible joint)	-	3 to 5	4 to 8	8 to 15	-	-	-	-	-
Terminal blocks	1 to 1,5	2 to 4 1)	4 to 6,5	6,5 to 9	10 to 18	15,5 to 30	-	30 to 50	-
Grounding terminals	1,5 to 3	3 to 5	5 to 10	10 to 18	28 to 40	45 to 70	-	115 to 170	

Note: 1) For 12-pin terminal block, apply the minimum torque of 1.5 Nm and maximum torque of 2.5 Nm.

ENGLISH

8.4. DRYING THE STATOR WINDING INSULATION

Dismantle the motor completely. Remove the end shields, the rotor with the shaft, the fan cover, the fan and the terminal box before the wound stator with the frame is transferred to the oven for the drying process. Place the wound stator in the oven heated to max. 120 °C for two hours. For larger motors a longer drying time may be required. After the drying process has been concluded, allow the stator to cool to room temperature. Measure the insulation resistance again as described in item 5.4. Repeat the stator drying process if the required insulation resistance does not meet the values specified in Table 5.3. If the insulation resistance does not improve despite several drying processes, evaluate the causes of the insulation resistance drop carefully and an eventual replacement of the motor winding may be required. If in doubt contact WEG.



To prevent electrical shock, discharge the motor terminals immediately before, and after each measurement. If the motor is equipped with capacitors, these must be discharged before beginning any repair.

8.5. SPARE PARTS

When ordering spare parts, always provide complete motor designation, indicating the motor type, the code number and the serial number, which are stated on the motor nameplate.

Spare parts must always be purchased from WEG authorized Service Centers. The use of non-original spare parts can cause motor failure, performance drop and void the product warranty.

The spare parts must be stored in a clean, dry and properly ventilated room, with relative air humidity not exceeding 60%, with ambient temperature between 5 °C and 40 °C, free of dust, vibrations, gases, corrosive smokes and at constant temperature. The spare parts must be stored in their normal mounting position without placing other components onto them.

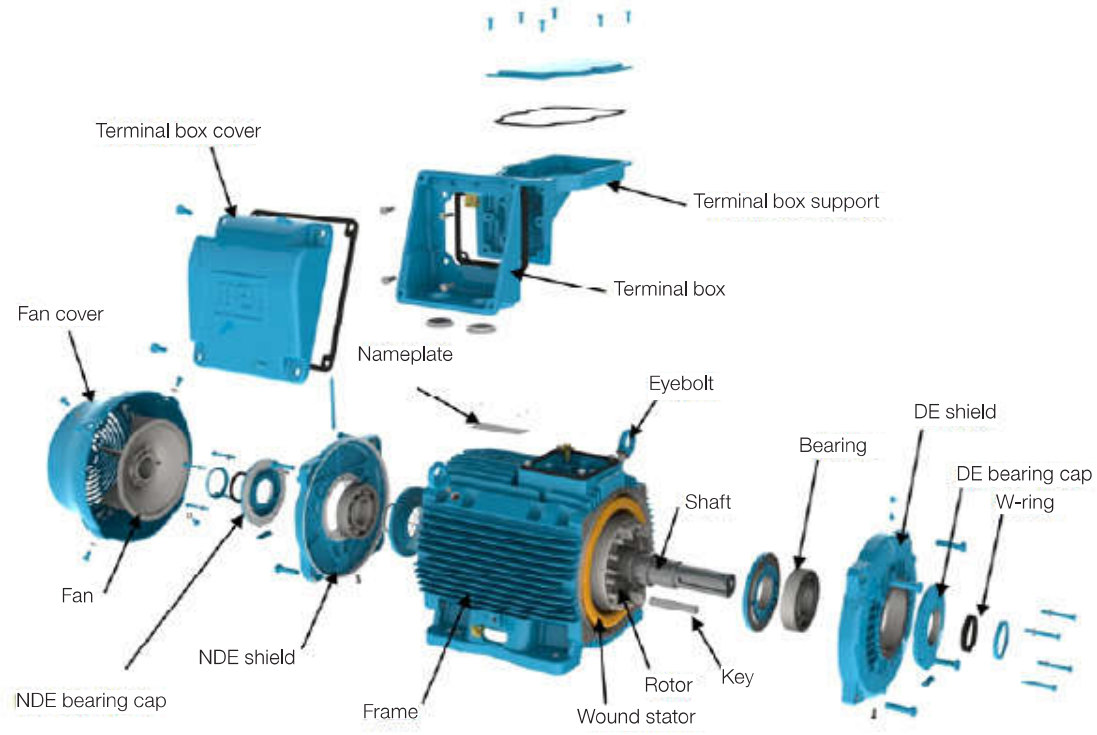

Figure 8.4 *- Exploded view of the components of a W22 motor*

9. ENVIRONMENTAL INFORMATION

9.1. PACKAGING

WEG electric motors are supplied in cardboard, plastic or wooden packaging. These materials can be recycled and must be disposed according to the applicable laws and regulations in each country. All wood used in the packaging of WEG motors come from the company reforestation program and is not submitted to any chemical conservation treatment.

9.2. PRODUCT

Electric motors consist mainly of ferrous metals (steel plates and cast iron), non ferrous metals (copper and aluminum) and plastic materials.

In general, electric motors have relatively long service live. However when they must be discarded, WEG recommends to dismantle the motor, sort the different materials and send them for recycling.

No-recyclable materials should be disposed of at industrial landfills according to the applicable environmental laws and regulations in each country, or co-processed in cement kilns or incinerated.

The recycling service providers, the disposal in industrial landfills, the waste co-processing or the incineration process must be properly authorized by the state environment agency to carry out these activities.

10. TROUBLESHOOTING CHART X SOLUTIONS

This troubleshooting chart provides a basic list of problems that may occur during motor operation, possible causes and recommended corrective actions. In case of doubts, please contact WEG Service Center.

Problem	Possible cause	Corrective action
Motor does not start, neither coupled nor decoupled	Power cables are interrupted	Check the control panel and the motor power supply cables
	Blown fuses	Replace blown fuses
	Wrong motor connection	Correct the motor connection according to connection diagram
	Locked rotor	Check motor shaft to ensure that it rotates freely
The motor starts at no-load, but fails when load is applied. It starts very slowly and does not reach the rated speed	Load toque is too high during start-up	Do not start the motor on load
	Too high voltage drop in the power cables	Check the installation dimensioning (transformer, cable cross section, relays, circuit breakers, etc.)
Abnormal/excessive noise	Defective transmission component or defective driven machine	Check the transmission force, the coupling and the alignment
	Misaligned / unleveled base	Align / level the motor with the driven machine
	Unbalanced components or unbalanced driven machine	Balance the machine set again
	Different balancing methods used for motor and coupling balancing (halve key, full key)	Balance the motor again
	Wrong motor direction of rotation	Reverse the direction of rotation
	Loose bolts	Retighten the bolts
	Foundation resonance	Check the foundation design
	Damaged bearings	Replace the bearings
Motor overheating	Insufficient cooling	Clean air inlet and outlet and cooling fins
		Check the minimum required distance between the fan cover and nearest walls. See item 7
		Check air temperature at inlet
	Overload	Measure motor current, evaluate motor application and if required, reduce the load
	Number of starts per hour is too high or the load inertia moment is too high	Reduce the number of starts per hour
	Power supply voltage too high	Check the motor power supply voltage. Power supply voltage must not exceed the tolerance specified in item 7.2
	Power supply voltage too low	Check the motor power supply voltage and the voltage drop. Power supply voltage must not exceed the tolerance specified in item 7.2
	Interrupted power supply	Check the connection of the power cables
	Voltage unbalance at the motor terminals	Check for blown fuses, wrong commands, voltage unbalance in the power line, phase fault or interrupted power cables
	Direction of rotation is not compatible with the unidirectional fan	Check if the direction of rotation matches the rotation arrow indicated on end shield
Bearing overheating	Excessive grease/oil	Clean the bearing and lubricate it according to the provided recommendations
	Grease/oil aging	
	The used grease/oil does not matches the specified one	
	Lack of grease/oil	Lubricate the bearing according to the provided recommendations
	Excessive axial or radial forces due to the belt tension	Reduce the belt tension
		Reduce the load applied to the motor

NEMA 56 Frame Explosion Proof Motors
TEFC

Standard Features

- Single and Three Phase, 4 pole, 60 Hz
- Voltage:
  - Single Phase 115/208-230V
  - Three Phase 208-230/460 or 575V
- Totally Enclosed Fan Cooled (IP44)
- Die cast aluminum squirrel cage rotor
- Ball bearings
- Overload protection:
  - Single Phase: Automatic Thermostats
  - Three Phase: Thermostats
- 575V rated motors have Spike Resistant WISE wire.
  - Protects against IGBT voltage spikes up to 2200V.
  - Exceeds NEMA MG1 Part 31.4.4.2
- Continuous Duty
- 40°C ambient
- High starting torque
- Service Factor: 1.15
- Insulation class 'B' (Δt 80°C)
- Paint: RAL 7022 (Grey)
- WEG Paint Plan: 207N
- Terminal box included



TEMP CODE T3C
Class I, Div 1, Groups C & D
Class II, Div 1, Groups F & G

Optional Features

- C Flange
- Special voltages
- Specially dimensioned shaft
- Second shaft end
- Stainless steel shaft
- Footless
- Other mounting configurations

NEMA 56 Frame Explosion Proof Motors

TEFC - Mechanical Data

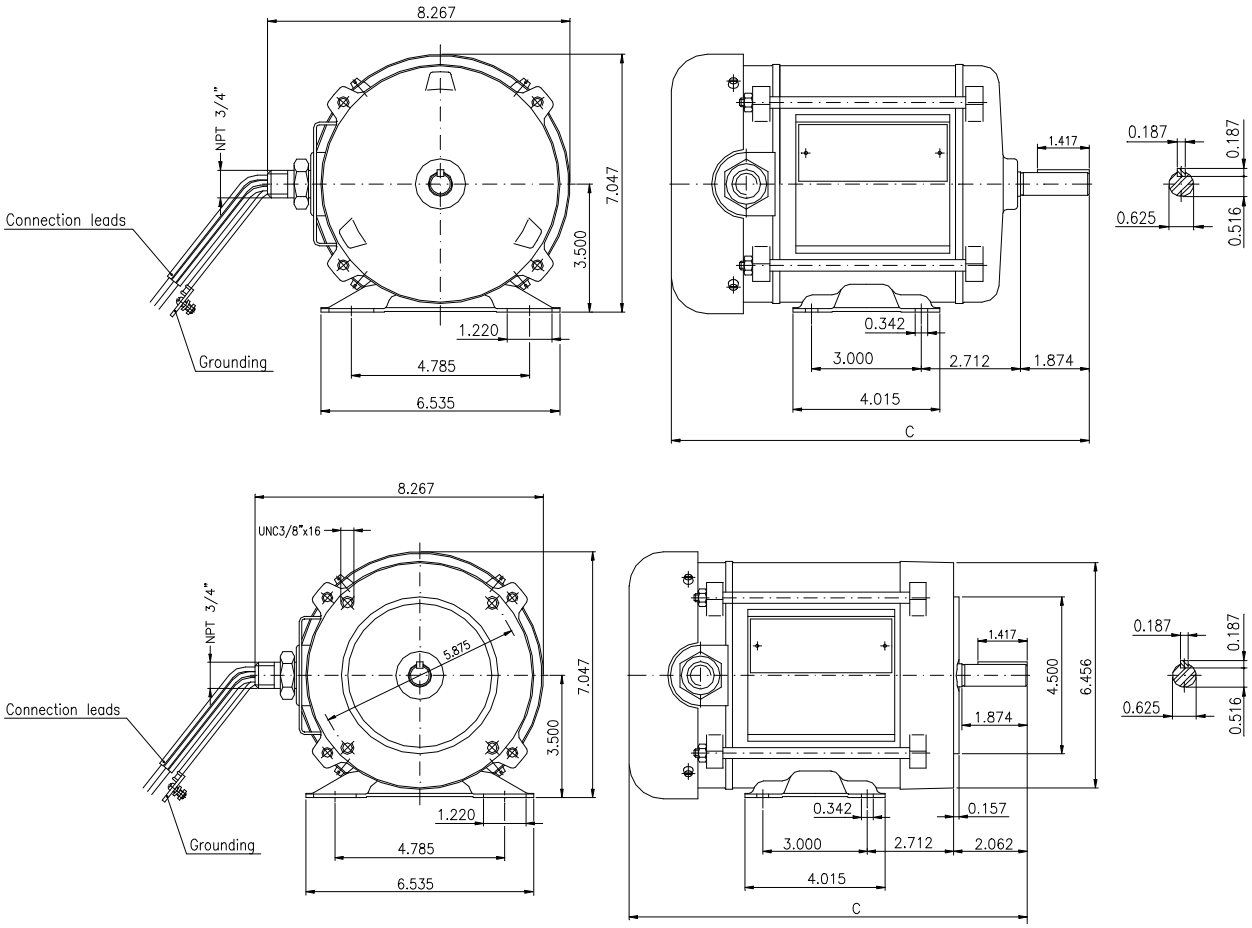

NEMA FRAMES	C	BEARINGS	
		D.E	N.D.E.
A56	11.410	6203-ZZ	
B56	12.204		
D56	13.385		

Section 3.1.3

Screen Level Switch

Ktech INDUSTRIAL PRODUCTS INC.

Model FS401 Overfill Protection Device Installation Instructions
Part No.: FS401E-2

CAUTION: REFER TO INSTRUCTIONS BEFORE OPERATING OR SERVICING SWITCH.
Construction: ½" O.D. ss stem, 2" dia. 316 ss float, 2" NPT bushing, explosion proof J-box. Switch set-point distances are measured from the underside of the 2" NPT bushing to the center of the float at the level where the switch is activated. Switch set-point distances are not field adjustable. They are factory-set as specified on the purchase order. The contact arrangement may be changed from normally open (NO) to normally closed (NC) and vice versa. Turn over the float and return the stop collars to their original positions. If the contact arrangement is altered, use an ohmmeter to test that the switch operates correctly. Screw the float switch into the 2" NPT opening on top of the tank. The conductors are colour coded to identify each switch. The switch must be connected in series with a load.

DO NOT CONNECT THE SWITCH DIRECTLY ACROSS THE POWER SUPPLY.
The voltage / current product must not exceed the power rating.

Electrical Specifications

Maximum Switching Voltage Volts DC/AC	120
Maximum Switching Current Amps DC/AC	1.0
Maximum Switching Power Volt/Amps DC/AC	100
Operating Temperature Range	-25˚C to 90˚C -13˚F to 194˚F

LISTED
OVERFILL
PROTECTION
DEVICES
4YC9

Meets Standards:
Class 1 Division 1, Groups B,C,D
CSA C22.2 No. 1010-1 and ANSI/I SA S82-03
CSA C22.2 No. 30 and UL1203
Factory Sealed

Intertek
9700099

MINIMUM SETPOINT DISTANCE FROM TOP IS 2"
MINIMUM SETPOINT DISTANCE BETWEEN CONTACTS IS 3"
MINIMUM SETPOINT DISTANCE FROM BOTTOM IS 2 1/2"

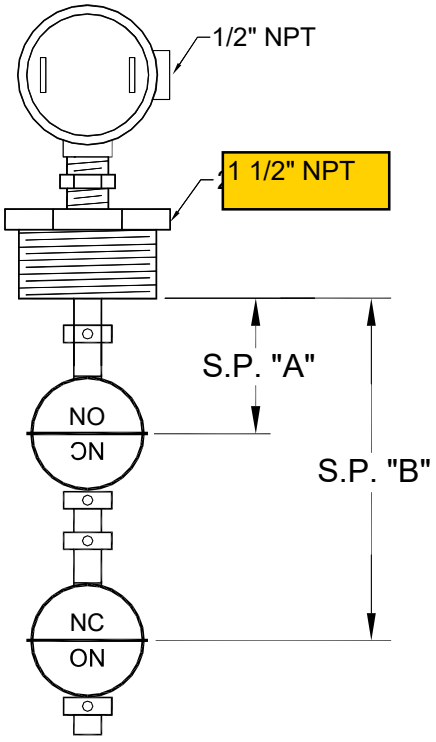

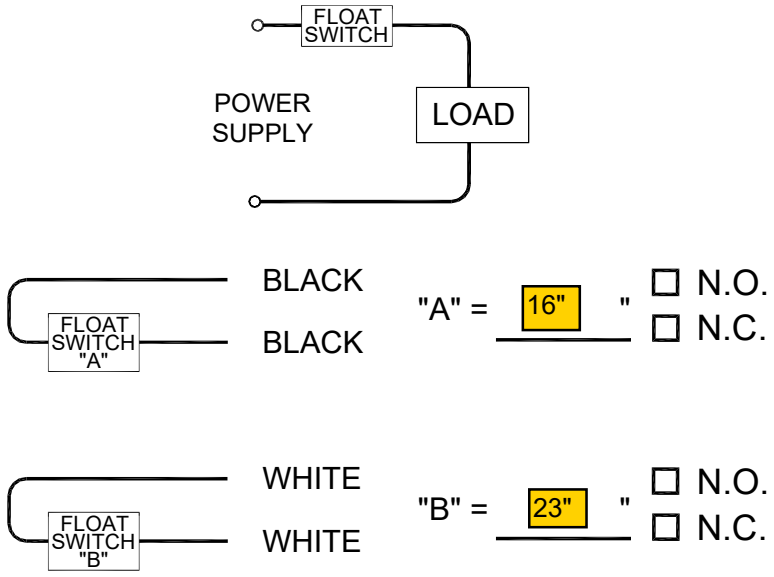

Ktech Industrial Products, 20 Regan Road, Unit 11, Brampton, Ontario. L7A 1C3 Phone (905) 840-7106, Fax (905) 840-6172

Section 3.1.4

Screen Wash Water Line Solenoid

General Service - 2/2 Normally Closed 1/2"

Pipe Size (in)	Orifice (in)	Cv Flow	Operating Pressure Differential (psi)				Max. Fluid Temp.°F	Valve Catalog Number	Body Material	Sealing Material	Voltage	Valve Order Code	Wattage	Approvals		Rebuild Kit Order Code	Replacement Coil Order Code	Approx. Shipping Weight (lbs.)
			Min.	Max. Air	Max. Water	Max. Light Oil								UL	FM			
2/2 Normally Closed																		
1/2	7/16	2.2	5	40	40	-	150	8210G015	BR	NBR	24/DC	21851	11.6	●	-	302374	238710-006-D*	2.0
		2.2	5	150	125	-	180	8210G015	BR	NBR	120/60,110/50	20126	6.1	●	-	302275	238210-032-D*	2.0
		2.2	5	150	125	-	180	8210G015	BR	NBR	24/60	20130	6.1	●	-	302275	238210-005-D*	2.0
		2.2	5	150	125	-	180	8210G015	BR	NBR	240/60,220/50	20128	6.1	●	-	302275	238210-058-D*	2.0
		2.2	5	150	125	-	180	EF8215G015	BR	NBR	120/60,110/50	20127	6.1	●	-	302275	238214-032-D*	2.0
		2.2	5	150	125	-	180	8210G037	SS	NBR	120/60,110/50	20179	6.1	●	-	302327	238210-032-D*	2.0
		2.2	5	150	125	-	180	EF8210G037	SS	NBR	120/60,110/50	20181	6.1	●	-	302327	238214-032-D*	2.0
		2.8	0	4	6	-	180	8030G016	BR	NBR	120/60,110/50	20010	6.1	❍	●	302789	238210-032-D*	2.7
		2.8	0	15	15	-	200	8030G017	BR	NBR	120/60	21443	16.1	❍	-	302790	272610-032-D*	2.7
		2.8	0	15	-	-	180	8030G017VH	BR	NBR	120/60	21444	16.1	-	-	302790-VH	272610-032-D*	2.7
	3/8	3.2	25	1500	1500	1500	200	8223G003	BR	NYLON	120/60,110/50	20359	17.1	-	-	302315	238610-132-D*	3.4
		3.2	25	1500	1500	1500	200	8223G010	SS	PTFE	120/60,110/50	20364	17.1	-	-	302322	238610-132-D*	3.4
	17/32	4.5	5	230	230	230	195	SC8238T405	BR	BR	120/60	21900	4.0	❑	-	323457	43005573	2.0
		4.5	5	230	230	230	195	SC8238T405	BR	BR	24/60	21901	4.0	❑	-	323457	43005582	2.0
	5/8	4	0	150	150	-	180	8210G094	BR	NBR	120/60,110/50	20229	10.1	❍	-	302272	238610-032-D*	3.2
		4	0	150	150	-	180	8210G094	BR	NBR	24/60	20246	10.1	❍	-	302272	238610-005-D*	3.2
		4	0	150	150	-	180	8210G094	BR	NBR	240/60,220/50	20243	10.1	❍	-	302272	238610-058-D*	3.2
		4	0	150	150	-	180	EF8210G094	BR	NBR	120/60,110/50	20236	10.1	❍	-	302272	238214-032-D*	3.2
		4	0	150	150	-	180	JKF8210G094	BR	NBR	120/60,110/50	20242	10.1	❍	-	302272	238612-032-*	3.2
		4	0	150	150	-	180	JSF8210G094	BR	NBR	120/60,110/50	21778	10.1	❍	-	302272	238612-032-*	3.2
		4	0	150	150	-	180	SC8210G094	BR	NBR	120/60,110/50	21031	10.1	❍	-	302272	238612-032-*	3.2
		4	0	150	150	-	180	8210G094MO	BR	NBR	120/60,110/50	20231	10.1	❍	-	302272-MO	238610-032-D*	3.2
		4	0	150	150	-	180	8210G094V	BR	FKM	120/60,110/50	20233	10.1	❍	-	302272-V	238610-032-D*	3.2
		4	0	150	-	-	180	8210G094N	BR	NBR	120/60,110/50	20232	10.1	❍	-	302272-N	238610-032-D*	3.2
		4	0	40	40	-	150	8210G094	BR	NBR	24/DC	20248	11.6	❍	-	302372	238710-006-D*	3.2
		4	0	40	40	-	150	8210G094	BR	NBR	12/DC	20247	11.6	❍	-	302372	238710-004-D*	3.2
		4	0	40	40	-	150	SC8210G094	BR	NBR	24/DC	21621	11.6	❍	-	302372	238712-006-*	3.2
		4	0	150	150	125	175	8210G087	SS	NBR	120/60,110/50	20201	17.1	●	-	302328	238610-132-D*	3.3
		4	0	150	150	125	175	EF8210G087	SS	NBR	120/60,110/50	20204	17.1	●	-	302328	238614-132-D*	3.3
		4	0	150	150	125	175	EF8210G087V	SS	FKM	120/60,110/50	20206	17.1	●	-	302328-V	238614-132-D*	3.3
		4	0	150	150	-	175	8210G087E	SS	EPDM	120/60,110/50	20202	17.1	-	-	302328-E	238610-132-D*	3.3
		4	0	40	40	-	150	8210G087	SS	NBR	24/DC	21722	11.6	●	-	302423	238710-006-D*	3.3
		4	0	40	40	-	150	EF8210G087	SS	NBR	24/DC	20209	11.6	●	-	302423	238714-006-D*	3.2
		4	5	200	150	135	180	8210G002	BR	NBR	120/60,110/50	20043	6.1	❍	-	302273	238210-032-D*	3.2
		4	5	200	150	135	180	8210G002	BR	NBR	24/60	20058	6.1	❍	-	302273	238210-005-D*	3.2
		4	5	200	150	135	180	8210G002	BR	NBR	240/60,220/50	20053	6.1	❍	-	302273	238210-058-D*	3.2
		4	5	200	150	135	180	8210G002	BR	NBR	480/60,440/50	20056	6.1	❍	-	302273	238210-088-D*	3.2
		4	5	200	150	135	180	EF8210G002	BR	NBR	120/60,110/50	20049	6.1	❍	-	302273	238214-032-D*	3.2
		4	5	200	150	135	180	EF8210G002MO	BR	NBR	120/60,110/50	20050	6.1	❍	-	302273-MO	238214-032-D*	3.2
		4	5	200	150	135	180	JKF8210G002	BR	NBR	120/60,110/50	20051	6.1	❍	-	302273	238212-032-*	3.2
		4	5	200	150	135	180	SC8210G002	BR	NBR	120/60,110/50	20995	6.1	❍	-	302273	238212-032-*	3.2
		4	5	200	150	135	180	JSF8210G002	BR	NBR	120/60,110/50	20989	6.1	●	-	302273	238212-032-*	3.2
		4	5	200	150	135	180	8210G002MO	BR	NBR	120/60,110/50	20046	6.1	●	-	302273-MO	238210-032-D*	3.2
		4	5	200	150	135	180	8210G002V	BR	FKM	120/60,110/50	20048	6.1	-	-	302273-V	238210-032-D*	3.2
		4	5	125	-	-	140	8210G002Q	BR	NBR	120/60	21311	15.1	❑	-	304006	270110-032-D*	3.2
		4	5	125	100	100	150	8210G002	BR	NBR	24/DC	20062	11.6	❍	-	302373	238710-006-D*	3.2
		4	5	125	100	100	150	8210G002	BR	NBR	12/DC	20061	11.6	❍	-	302373	238710-004-D*	3.2
		4	5	125	100	100	150	EF8210G002	BR	NBR	24/DC	20063	11.6	❍	-	302373	238714-006-D*	3.2
		4	5	125	100	100	150	SC8210G002	BR	NBR	24/DC	21134	11.6	❍	-	302373	238712-006-*	3.2
		4	5	300	300	300	175	8210G007	BR	NBR	120/60,110/50	20095	17.1	❑	-	302274	238610-132-D*	3.2
		4	5	300	300	300	175	EF8210G007	BR	NBR	120/60,110/50	20098	17.1	❑	-	302274	238614-132-D*	3.2
	3/4	4.4	0	50	-	-	125	8215G020	AL	NBR	120/60,110/50	20290	10.1	❍	●	302350	238610-032-D*	2.8
		4.4	0	50	-	-	125	EF8215G020	AL	NBR	120/60,110/50	20292	10.1	❍	●	302350	238614-032-D*	2.8
		4.4	0	50	-	-	104	SC8215G020	AL	NBR	120/60,110/50	21785	10.1	-	-	302350	238612-032-*	2.8
		4.4	0	25	-	-	104	8215G020	AL	NBR	12/DC	20294	11.6	❍	●	302430	238710-004-D*	2.8

Fluid Control Products







ASCO® A Constant Flow Of Ideas

2 Way General Purpose Solenoid Valves

Installation & Maintenance Instructions

2–WAY INTERNAL PILOT–OPERATED SOLENOID VALVES
NORMALLY CLOSED OPERATION — GENERAL SERVICE
1″, 1¼″ OR 1½″ NPT

SERIES
8210
8211
I&M No.V5436R7

NOTICE: See separate solenoid installation and maintenance instructions for information on: Wiring, Solenoid Temperature, Cause of Improper Operation, Coil or Solenoid Replacement.

DESCRIPTION

Series 8210 valves are 2–way normally closed internal pilot–operated solenoid valves designed for general service. Valves are made of rugged forged brass. Series 8210 valves are provided with a general purpose solenoid enclosure.
Series EF8210 and 8211 are the same as Series 8210 except they are provided with an explosionproof or explosionproof/watertight solenoid enclosure.

OPERATION

Normally Closed: Valve is closed when solenoid is de–energized; open when energized.

IMPORTANT: Minimum operating pressure differential is 5 psi.

Manual Operator (optional feature)

Manual operator allows manual operation when desired or during an electrical power outage. To engage manual operator (open the valve), turn lever clockwise until it hits a stop. Valve will now be in the same position as when the solenoid is energized. To disengage manual operator (close the valve), turn lever counterclockwise until it hits a stop.

To engage, turn lever clockwise until it hits a stop.

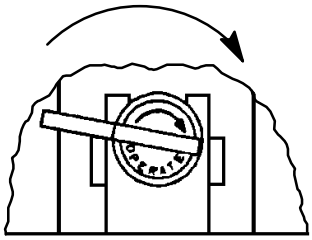

Partial view of Manual Operator

⚠ **CAUTION: For valve to operate electrically, manual operator lever must be fully rotated counterclockwise.**

INSTALLATION

Check nameplate for correct catalog number, pressure, voltage, frequency, and service. Never apply incompatible fluids or exceed pressure rating of the valve. Installation and valve maintenance to be performed by qualified personnel.

Future Service Considerations

Provision should be made for performing seat leakage, external leakage, and operational tests on the valve with a nonhazardous, noncombustible fluid after disassembly and reassembly.

Temperature Limitations

For maximum valve ambient and fluid temperatures, refer to chart below. Check catalog number prefix and watt rating on nameplate.

Watt Rating AC/DC	Catalog Number Prefix	Solenoid Class	Maximum Ambient Temp.	Maximum Fluid Temp.
6 AC	None or DF	F	122°F (50°C)	180°F (82°C)
	HT	H	140°F (60°C)	180°F (82°C)
6.1 AC	None, KF, SF or SC	F	125°F (54° C)	180°F (82°C)
	HT, KH, ST or SU	H	140°F (60°C)	180°F (82°C)
11.2 DC	None or HT	F or H	77°F (25°C)	150°F (65°C)
11.6 DC	None, HT, KF, KH, SC, SF or ST	F or H	104°F (40°C)	150°F (65°C)

Positioning

This valve is designed to perform properly when mounted in any position. However, for optimum life and performance, the solenoid should be mounted vertically and upright to reduce the possibility of foreign matter accumulating in the solenoid base sub–assembly area.

Piping

Connect piping to valve according to markings on valve body. Apply pipe compound sparingly to male pipe threads only. If applied to valve threads, the compound may enter the valve and cause operational difficulty. Avoid pipe strain by properly supporting and aligning piping. When tightening the pipe, do not use valve or solenoid as a lever. Locate wrenches applied to valve body or piping as close as possible to connection point.

⚠ **CAUTION: To protect the solenoid valve, install a strainer or filter suitable for the service involved in the inlet side as close to the valve as possible. Clean periodically depending on service conditions. See ASCO Series 8600, 8601 and 8602 for strainers.**

MAINTENANCE

⚠ **WARNING: To prevent the possibility of death, serious injury or property damage, turn off electrical power, depressurize valve, and vent fluid to a safe area before servicing the valve.**

NOTE: It is not necessary to remove the valve from the pipeline for repairs.

50 Hanover Road, Florham Park, New Jersey 07932 www.ascovalve.com
E177856
All Rights Reserved.

Cleaning

All solenoid valves should be cleaned periodically. The time between cleanings will vary depending on the medium and service conditions. In general, if the voltage to the coil is correct, sluggish valve operation, excessive noise or leakage will indicate that cleaning is required. In the extreme case, faulty valve operation will occur and the valve may fail to open or close. Clean strainer or filter when cleaning the valve.

Preventive Maintenance

- Keep medium flowing through the valve as free from dirt and foreign material as possible.
- Periodic exercise of the valve should be considered if ambient or fluid conditions are such that corrosion, elastomer degradation, fluid contamination build up, or other conditions that could impede solenoid valve shifting are possible. The actual frequency of exercise necessary will depend on specific operating conditions. A successful operating history is the best indication of a proper interval between exercise cycles.
- Depending on the medium and service conditions, periodic inspection of internal valve parts for damage or excessive wear is recommended. Thoroughly clean all parts. If parts are worn or damaged, install a complete rebuild kit.

Causes of Improper Operation

- **Incorrect Pressure:** Check valve pressure. Pressure to valve must be within range specified on nameplate.
- **Excessive Leakage:** Disassemble valve and clean all parts. If parts are worn or damaged, install a complete ASCO Rebuild Kit.

Valve Disassembly

1. Disassemble valve in an orderly fashion using exploded views for identification and placement of parts. Refer to Figure 1 for AC construction; Figure 2 for DC construction. For 1″ or 1 ¼″ NPT valve construction, see Figure 1; for 1 ½″ NPT valve construction, see Figure 2.
2. Remove solenoid enclosure. See separate instructions.

- For valves supplied with optional manual operators, see section on ***Disassembly of Manual Operator***.

3. Unscrew solenoid base sub–assembly from valve body. Then remove core assembly with core spring and solenoid base gasket. For AC construction (Figure 1) core spring is a loose piece.
4. For normal maintenance (cleaning) it is not necessary to remove the valve seat. However, for valve seat removal use a 7/16″ thin wall socket wrench
5. Remove bonnet screws, valve bonnet, diaphragm spring, diaphragm assembly, body gasket, body passage eyelet (present on current valve constructions only) and body passage gasket.
6. All parts are now accessible for cleaning or replacement. If parts are worn or damaged, install a complete ASCO Rebuild Kit.

– Service Notice –

When installing a new ASCO Rebuild Kit, please be aware that the diaphragm assembly may not be identical to the diaphragm assembly in the valve. See Figure 1 for alternate diaphragm constructions. The two diaphragm constructions are interchangeable and will perform equally well.

⚠ CAUTION: To ensure proper valve operation, install all parts supplied in ASCO Rebuild Kit. Do not mix old and new parts.

Valve Reassembly

1. Lubricate body gasket, body passage gasket, bonnet gasket and solenoid base gasket with DOW CORNING® 200 Fluid lubricant or an equivalent high–grade silicone fluid.
2. Install body passage gasket, body passage eyelet, diaphragm assembly, diaphragm spring, valve bonnet and bonnet screws. Hand thread screws as far as possible. Then torque bonnet screws in a crisscross manner to 144 ± 15 in–lbs [16,3 ± 1,7 Nm].
3. If removed, install valve seat in valve body. Apply a small amount of thread compound compatible with valve media to valve seat threads. Torque valve seat to 75 ± 10 in–lbs [8,5 ± 1,1 Nm].

- For valves supplied with optional manual operator, see section on ***Reassembly of Manual Operator***.

4. For AC construction (Figure 1), install core spring in core assembly. Wide end of core spring in core first, closed end protrudes from top of core.
5. Install solenoid base gasket, core assembly with core spring and solenoid base sub–assembly in valve body. Torque solenoid base sub–assembly to 175 ± 25 in–lbs [19,8 ± 2,8 Nm].
6. Install solenoid. See separate instructions.

⚠ WARNING: To prevent the possibility of death, serious injury or property damage, check valve for proper operation before returning to service. Also perform internal seat and external leakage tests with a nonhazardous, noncombustible fluid.

7. Restore line pressure and electrical power supply to valve.
8. After maintenance is completed, operate the valve a few times to be sure of proper operation. A metallic *click* indicates the solenoid is operating.

Disassembly of Manual Operator

1. Unscrew solenoid base sub–assembly from manual operator body.
2. Unscrew manual operator body from valve body. Then remove stem retainer from base of manual operator body and stem/spacer sub–assembly.
3. Pull stem/spacer sub–assembly with stem gasket from side of manual operator body. Then remove core assembly with core spring, solenoid base gasket and manual operator bonnet gasket.
4. For further disassembly refer to section on ***Valve Disassembly*** step 4.

Reassembly of Manual Operator

1. Lubricate stem gasket with DOW CORNING® 111 Compound lubricant or an equivalent high–grade silicone grease.
2. For AC construction (Figure 1), install core spring in core assembly. Wide end of core spring in core first, closed end protrudes from top of core.
3. Holding the manual operator body in a horizontal position, install core assembly with core spring from the bottom end.
4. Insert the stem/spacer sub–assembly with the stem gasket into the side hole of the manual operator body. Rotate the lever of the stem/spacer sub–assembly to the 12 o'clock position.
5. Install stem retainer on base of manual operator body and simultaneously engage it into the slot provided on the stem/spacer sub–assembly.

IMPORTANT: The spacer on the stem/spacer sub–assembly *must be inside* of the stem retainer for AC construction (Figure 1) and *outside* of the stem retainer for DC construction (Figure 2).

6. Install manual operator bonnet gasket and body with preassembled parts into valve body. Torque manual operator body to 175 ± 25 in–lbs [19,8 ± 2,8 Nm].
7. Replace solenoid base gasket and solenoid base sub–assembly. Torque solenoid base sub–assembly to 175 ± 25 in–lbs [19,8 ± 2,8 Nm].
8. For further reassembly, refer to ***Valve Reassembly*** step 6.

ASCO® 50 Hanover Road, Florham Park, New Jersey 07932 www.ascovalve.com

Torque Chart

Part Name	Torque Value Inch–Pounds	Torque Value Newton–Meters
Solenoid base sub–assembly	175 ± 25	19,8 ± 2,8
Manual operator body		
Bonnet screw	144 ± 15	16,3 ± 1,7
Valve seat	75 ± 10	8,5 ± 1,1

ORDERING INFORMATION FOR ASCO REBUILD KITS

Parts marked with an asterisk (*) in the exploded view are supplied in Rebuild Kits. When Ordering Rebuild Kits for ASCO valves, order the Rebuild Kit number stamped on the valve nameplate. If the number of the kit is not visible, order by indicating the number of kits required, and the Catalog Number and Serial Number of the valve(s) for which they are intended.

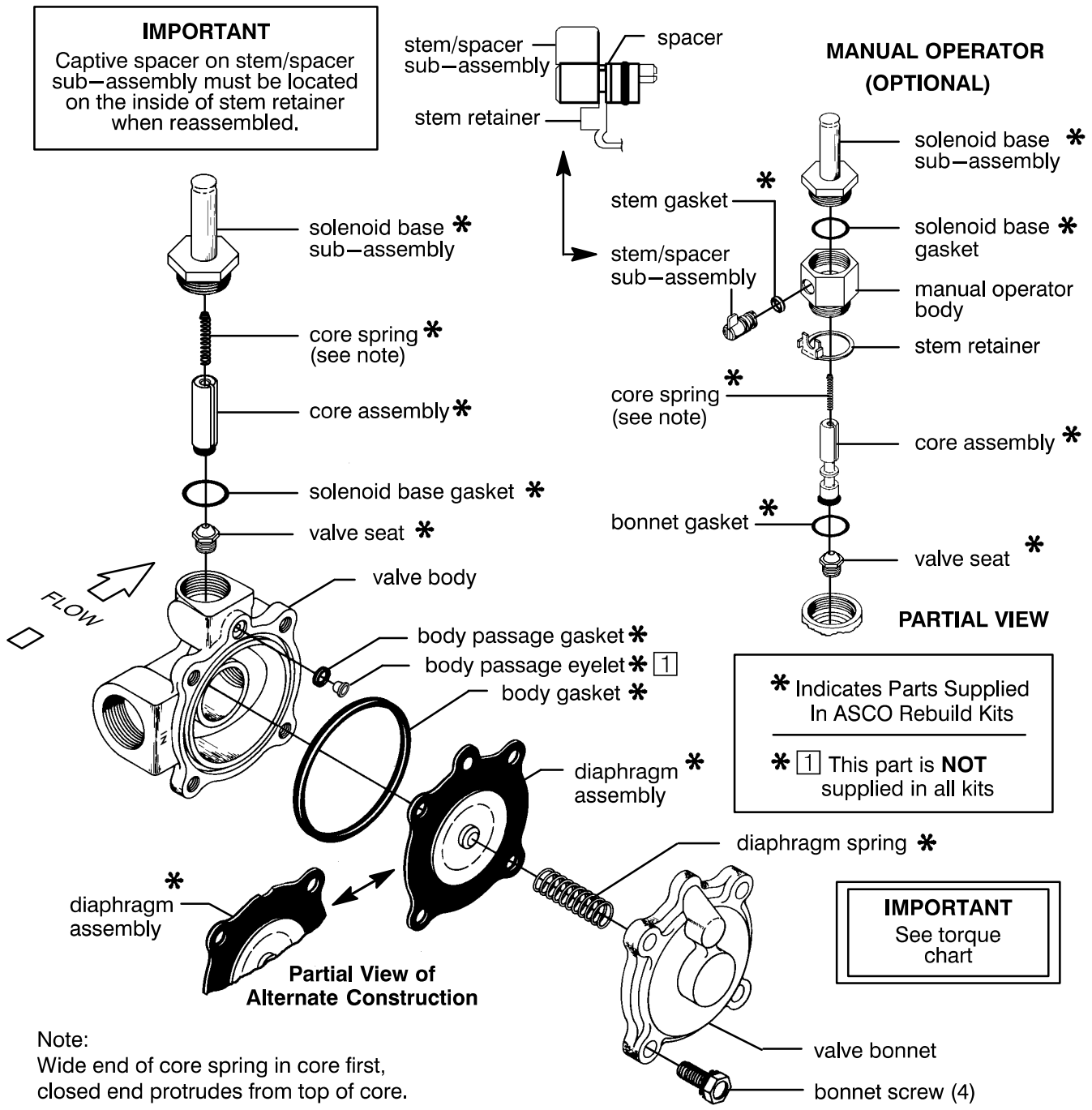

Figure 1. Series 8210 valve without solenoid, AC construction with 1″ or 1 ¼″ NPT valve body shown.

ASCO® 50 Hanover Road, Florham Park, New Jersey 07932 www.ascovalve.com

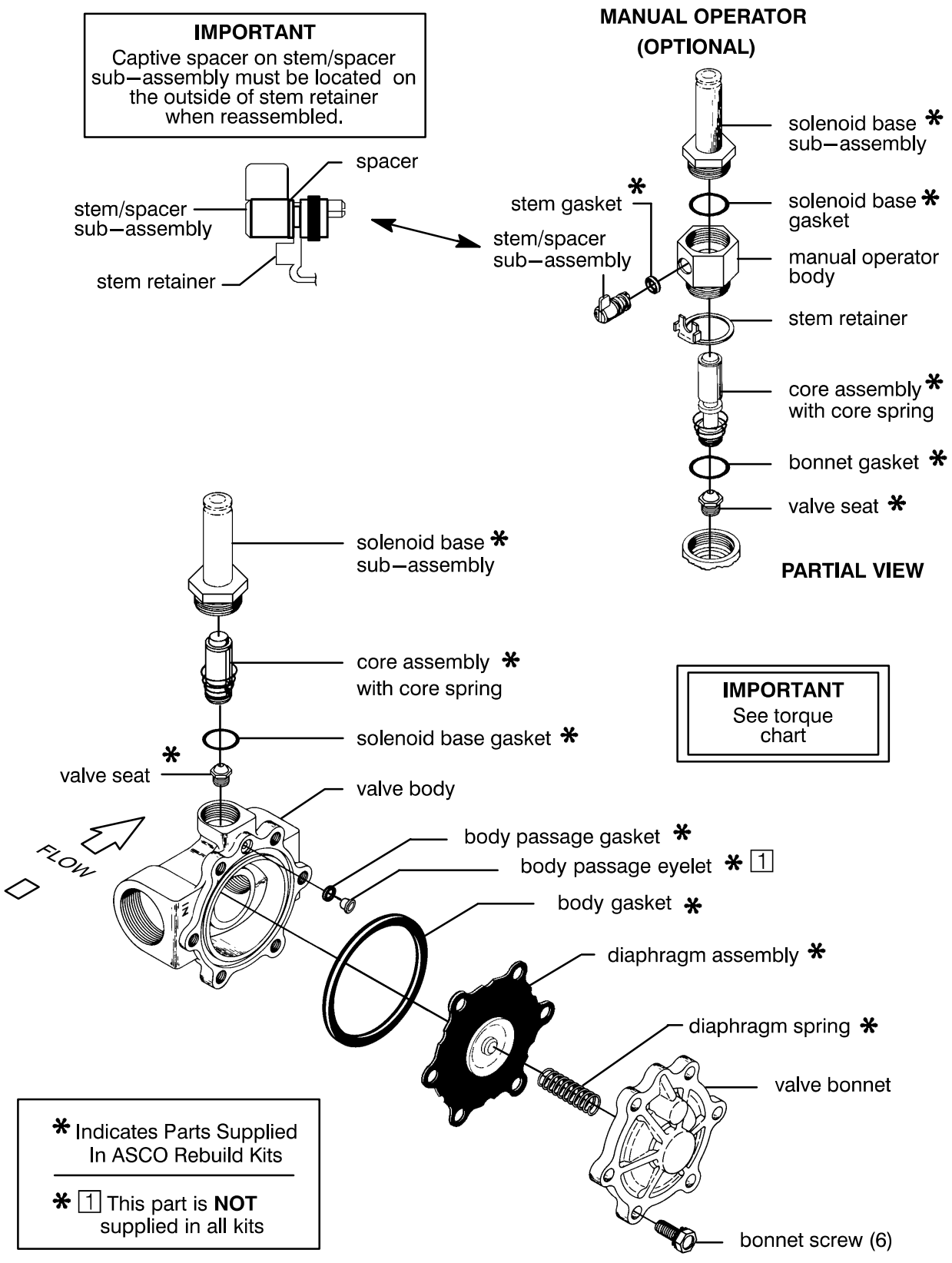

Figure 2. Series 8210 valve without solenoid, DC construction with 1 ½″ NPT valve body shown.

ASCO® 50 Hanover Road, Florham Park, New Jersey 07932 www.ascovalve.com

Installation & Maintenance Instructions

ASCO® Red-Hat II®

OPEN—FRAME, GENERAL PURPOSE, WATERTIGHT/EXPLOSIONPROOF SOLENOIDS

SERIES

8016G

Form No.V6583R7

—SERVICE NOTICE—

ASCO® solenoid valves with design change letter "G" in the catalog number (example: 8210G 1) have an epoxy encapsulated ASCO® Red Hat II™ solenoid. This solenoid replaces some of the solenoids with metal enclosures and open—frame constructions. Follow these installation and maintenance instructions if your valve or operator uses this solenoid.

DESCRIPTION

Catalog numbers 8016G1 and 8016G2 are epoxy encapsulated pull—type solenoids. The green solenoid with lead wires and 1/2″ conduit connection is designed to meet Enclosure Type 1—General Purpose, Type 2—Dripproof, Types 3 and 3S—Raintight, and Types 4 and 4X—Watertight. The black solenoid on catalog numbers prefixed "EF" is designed to meet Enclosure Types 3 and 3S—Raintight, Types 4 and 4X—Watertight, Types 6 and 6P—Submersible, Type 7 (A, B, C, & D) Explosionproof Class I, Division 1, Groups A, B, C, & D and Type 9 (E, F, & G)—Dust—Ignitionproof Class II, Division 1, Groups E, F, & G. The Class II, Groups F & G Dust Locations designation is not applicable for solenoids or solenoid valves used for steam service or when a class "H" solenoid is used. See *Temperature Limitations* section for solenoid identification and nameplate/retainer for service. When installed just as a solenoid and not attached to an ASCO valve, the core has a 0.250—28 UNF—2B tapped hole, 0.38 minimum full thread.

Series 8016G solenoids are available in:

- **Open—Frame Construction**
  The green solenoid may be supplied with 1/4″ spade, screw, or DIN terminals (Refer to Figure 4).
- **Panel Mounted Construction**
  These solenoids are specifically designed to be panel mounted by the customer through a panel having a .062 to .093 maximum wall thickness. (Refer to Figure 3 and section on *Installation of Panel Mounted Solenoid).*

Optional Features For Type 1 — General Purpose Construction Only

- **Junction Box**
  This junction box construction meets Enclosure Types 2,3,3S,4, and 4X. Only solenoids with 1/4″ spade or screw terminals may have a junction box. The junction box provides a 1/2″ conduit connection, grounding and spade or screw terminal connections within the junction box (See Figure 5).
- **DIN Plug Connector Kit No. K236034**
  Use this kit only for solenoids with DIN terminals. The DIN plug connector kit provides a two pole with grounding contact DIN Type 43650 construction (See Figure 6).

OPERATION

When the solenoid is energized, the core is drawn into the solenoid base sub—assembly. **IMPORTANT: When the solenoid is de—energized, the initial return force for the core, whether developed by spring, pressure, or weight, must exert a minimum force to overcome residual magnetism created by the solenoid. Minimum return force for AC construction is 11 ounces, and 4 ounces for DC construction.**

INSTALLATION

Check nameplate for correct catalog number, service, and wattage. Check front of solenoid for voltage and frequency.

⚠ WARNING: Electrical hazard from the accessibility of live parts. To prevent the possibility of death, serious injury or property damage, install the open — frame solenoid in an enclosure.

For Black Enclosure Types 7 and 9 Only

⚠ CAUTION: To prevent fire or explosion, do not install solenoid and/or valve where ignition temperature of hazardous atmosphere is less than 165° C. On valves used for steam service or when a class "H" solenoid is used, do not install in hazardous atmosphere where ignition temperature is less than 180°C. See nameplate/retainer for service.

NOTE: These solenoids have an internal non—resetable thermal fuse to limit solenoid temperature in the event that extraordinary conditions occur which could cause excessive temperatures. These conditions include high input voltage, a jammed core, excessive ambient temperature or a shorted solenoid, etc. This unique feature is a standard feature only in solenoids with black explosionproof/dust—ignitionproof enclosures (Types 7 & 9).

⚠ CAUTION: To protect the solenoid valve or operator, install a strainer or filter, suitable for the service involved in the inlet side as close to the valve or operator as possible. Clean periodically depending on service conditions. See ASCO Series 8600, 8601, and 8602 for strainers.

Temperature Limitations

For maximum valve ambient temperatures, refer to chart. The temperature limitations listed, only indicate maximum application temperatures for field wiring rated at 90°C. Check catalog number prefix and watt rating on nameplate to determine maximum ambient temperature. See valve installation and maintenance instructions for maximum fluid temperature.

NOTE: For steam service, refer to *Wiring* section, *Junction Box* for temperature rating of supply wires.

Temperature Limitations For Series 8016G Solenoids for use on Valves Rated at 6.1, 8.1, 9.1, 10.6, or 11.1 Watts

Watt Rating	Catalog Number Coil Prefix	Class of Insulation	Maximum † Ambient Temp.
6.1, 8.1, 9.1, & 11.1	None, FB, KF, KP, SF, SP, SC, & SD	F	125°F (51.7°C)
6.1, 8.1, 9.1, & 11.1	HB, HT, KB, KH, SS, ST, SU, & ST	H	140°F (60°C)
10.6	None, KF, SF, & SC	F	104°F (40°C)
10.6	HT, KH, SU, & ST	H	104°F (40°C)

†Minimum ambient temperature —40°F (—40° C).

Positioning

This solenoid is designed to perform properly when mounted in any position. However, for optimum life and performance, the solenoid should be mounted vertically and upright to reduce the possibility of foreign matter accumulating in the solenoid base sub—assembly area.

Wiring

Wiring must comply with local codes and the National Electrical Code. All solenoids supplied with lead wires are provided with a grounding wire which is green or green with yellow stripes and a 1/2″ conduit connection. To facilitate wiring, the solenoid may be rotated 360°. For the watertight and explosionproof solenoid, electrical fittings must be approved for use in the approved hazardous locations.

Additional Wiring Instructions For Optional Features:

- **Open—Frame solenoid with 1/4″ spade terminals**

For solenoids supplied with screw terminal connections use #12—18 AWG stranded copper wire rated at 90°C or greater. Torque terminal block screws to

All Rights Reserved.

10 ± 2 in–lbs [1,0 ± 1,2 Nm]. A tapped hole is provided in the solenoid for grounding, use a #10–32 machine screw. Torque grounding screw to 15 –20 in–lbs [1,7 – 2,3 Nm]. On solenoids with screw terminals, the socket head screw holding the terminal block to the solenoid is the grounding screw. Torque the screw to 15 – 20 in–lbs [1,7 – 2,3 Nm]. with a 5/32″ hex key wrench.

- **Junction Box**

The junction box is used with spade or screw terminal solenoids only and is provided with a grounding screw and a 1/2″ conduit connection. Connect #12–18 AWG standard copper wire only to the screw terminals. Within the junction box use field wire that is rated 90°C or greater for connections. For steam service use 105°C rated wire up to 50 psi or use 125°C rated wire above 50 psi. After electrical hookup, replace cover gasket, cover, and screws. Tighten screws evenly in a crisscross manner.

- **DIN Plug Connector Kit No.K236–034**

1. The open–frame solenoid is provided with DIN terminals to accommodate the DIN plug connector kit.
2. Remove center screw from plug connector. Using a small screwdriver, pry terminal block from connector cover.
3. Use #12–18 AWG stranded copper wire rated at 90°C or greater for connections. Strip wire leads back approximately 1/4″for installation in socket terminals. The use of wire–end sleeves is also recommended for these socket terminals. Maximum length of wire–end sleeves to be approximately 1/4″. Tinning of the ends of the lead wires is not recommended.
4. Thread wire through gland nut, gland gasket, washer, and connector cover.

NOTE: Connector cover may be rotated in 90° increments from position shown for alternate positioning of cable entry.

5. Check DIN connector terminal block for electrical markings. Then make electrical hookup to terminal block according to markings on it. Snap terminal block into connector cover and install center screw.
6. Position connector gasket on solenoid and install plug connector. Torque center screw to 5 ± 1 in–lbs [0,6 ± 1,1 Nm].

NOTE: Alternating current (AC) and direct current (DC) solenoids are built differently. To convert from one to the other, it may be necessary to change the complete solenoid including the core and solenoid base sub–assembly, not just the solenoid. Consult ASCO.

Installation of Solenoid

Solenoids may be assembled as a complete unit. Tightening is accomplished by means of a hex flange at the base of the solenoid. The 3/4″ bonnet construction (Figure 1) must be disassembled for installation and installed with a special wrench adapter.

Installation of Panel Mounted Solenoid (See Figure 3)

Disassemble solenoid following instruction under *Solenoid Replacement* then proceed.

3/4″ Valve Bonnet Construction

1. Install retainer (convex side to solenoid) in 1.312 diameter mounting hole in customer panel.
2. Then position spring washer over plugnut/core tube sub–assembly.
3. Install plugnut/core tube sub–assembly through retainer in customer panel. Then replace solenoid, nameplate/retainer and red cap.

15/16″ Valve Bonnet Construction

1. Install solenoid base sub–assembly through 0.69 diameter mounting hole in customer panel.
2. Position spring washer on opposite side of panel over solenoid base sub–assembly then replace.

Solenoid Temperature

Standard solenoids are designed for continuous duty service. When the solenoid is energized for a long period, the solenoid becomes hot and can be touched by hand only for an instant. This is a safe operating temperature.

MAINTENANCE

⚠ WARNING: To prevent the possibility of death, serious injury or property damage, turn off electrical power, depressurize solenoid operator and/or valve, and vent fluid to a safe area before servicing.

Cleaning

All solenoid operators and valves should be cleaned periodically. The time between cleaning will vary depending on medium and service conditions. In general, if the voltage to the solenoid is correct, sluggish valve operation, excessive noise or leakage will indicate that cleaning is required. Clean strainer or filter when cleaning the valve.

Preventive Maintenance

- Keep the medium flowing through the solenoid operator or valve as free from dirt and foreign material as possible.
- While in service, the solenoid operator or valve should be operated at least once a month to insure proper opening and closing.
- Depending on the medium and service conditions, periodic inspection of internal valve parts for damage or excessive wear is recommended. Thoroughly clean all parts. Replace any worn or damaged parts.

Causes of Improper Operation

- **Faulty Control Circuit:** Check the electrical system by energizing the solenoid. A metallic *click* signifies that the solenoid is operating. Absence of the *click* indicates loss of power supply. Check for loose or blown fuses, open–circuited or grounded solenoid, broken lead wires or splice connections.
- **Burned–Out Solenoid:** Check for open–circuited solenoid. Replace if necessary. Check supply voltage; it must be the same as specified on nameplate/retainer and marked on the solenoid. Check ambient temperature and check that the core is not jammed.
- **Low Voltage:** Check voltage across the solenoid leads. Voltage must be at least 85% of rated voltage.

Solenoid Replacement

1. On solenoids with lead wires disconnect conduit, coil leads, and grounding wire.

NOTE: Any optional parts attached to the old solenoid must be reinstalled on the new solenoid.

2. Disassemble solenoids with optional features as follows:

- **Spade or Screw Terminals**
  Remove terminal connections, grounding screw, grounding wire, and terminal block (screw terminal type only).

NOTE: For screw terminals, the socket head screw holding the terminal block serves as a grounding screw.

- **Junction Box**
  Remove conduit and socket head screw (use 5/32″ hex key wrench) from center of junction box. Disconnect junction box from solenoid.
- **DIN Plug Connector**
  Remove center screw from DIN plug connector. Disconnect DIN plug connector from adapter. Remove socket head screw (use 5/32″ hex key wrench), DIN terminal adapter, and gasket from solenoid.

3. Snap off red cap from top of solenoid base sub–assembly.
4. Push down on solenoid. Then using a suitable screwdriver, insert blade in slot provided between solenoid and nameplate/retainer. Pry up slightly and push to remove. Then remove solenoid from solenoid base sub–assembly.
5. Reassemble using exploded views for parts identification and placement

Disassembly and Reassembly of Solenoids

1. Remove solenoid, see *Solenoid Replacement.*
2. Remove finger washer or spring washer from solenoid base sub–assembly.
3. Unscrew solenoid base sub–assembly.

NOTE: Some solenoid constructions have a plugnut/core tube sub–assembly, bonnet gasket and bonnet in place of the solenoid base sub–assembly. To remove bonnet use special wrench adapter supplied in ASCO Rebuild Kit. For wrench adapter only, order ASCO Wrench Kit No.K218948.

4. The core is now accessible for cleaning or replacement.
5. If the solenoid is part of a valve, refer to basic valve installation and maintenance instructions for further disassembly.
6. Reassemble using exploded views for identification and placement of parts.

ORDERING INFORMATION FOR ASCO SOLENOIDS

When Ordering Solenoids for ASCO Solenoid Operators or Valves, order the number stamped on the solenoid. Also specify voltage and frequency.

ASCO® 50 Hanover Road, Florham Park, New Jersey 07932 www.ascovalve.com

Torque Chart

Part Name	Torque Value in Inch—Pounds	Torque Value in Newton—Meters
solenoid base sub—assembly	175 ± 25	19,8± 2,8
valve bonnet (3/4″ bonnet construction)	90 ± 10	10,2 ± 1,1
bonnet screw (3/8″ or 1/2″ NPT pipe size)	25	2,8
bonnet screw (3/4″ NPT pipe size)	40	4,5

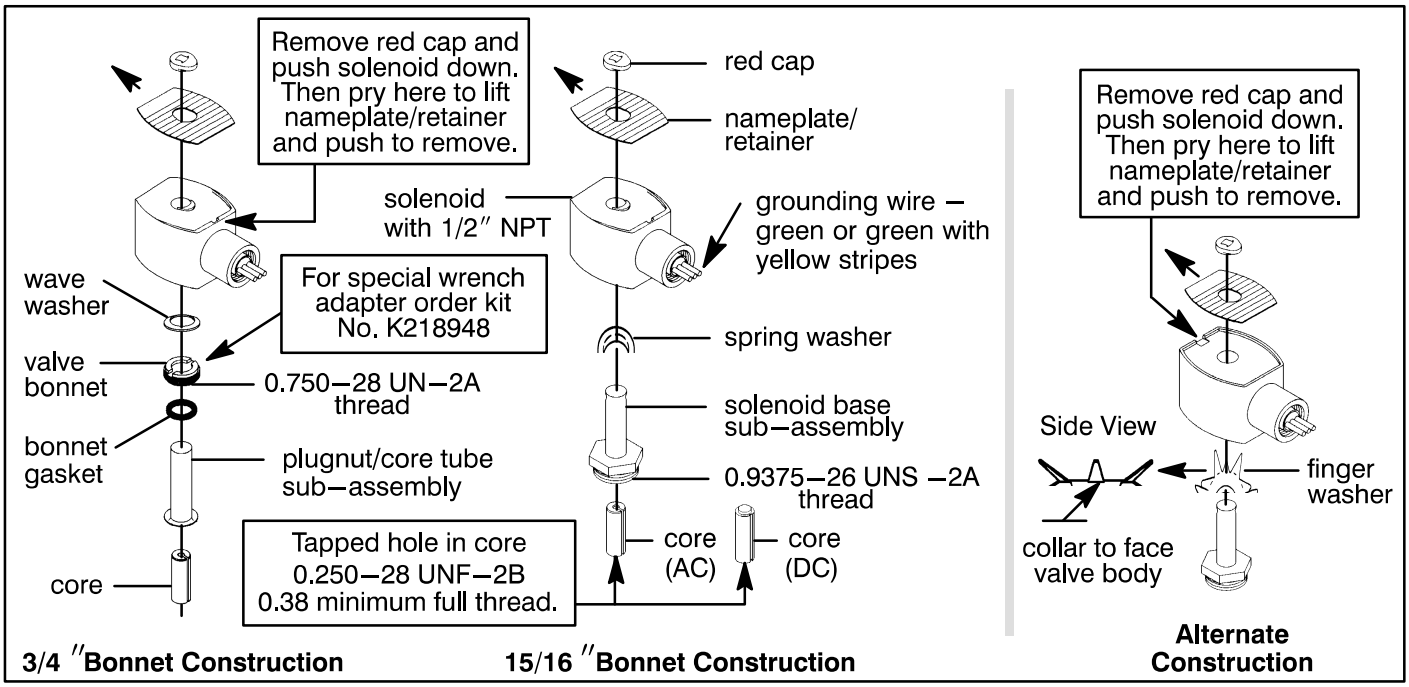

Figure 1. Series 8016G solenoids

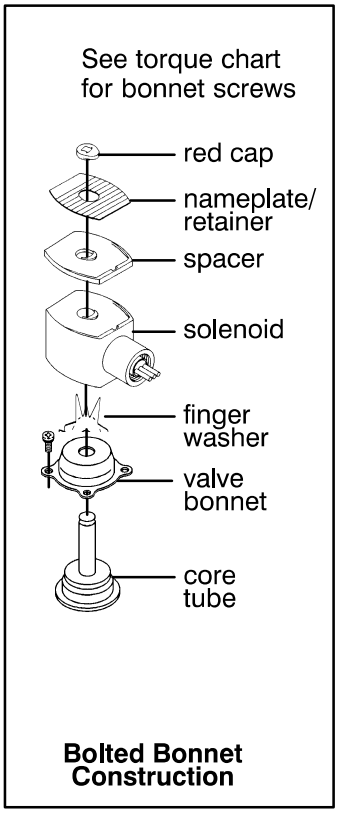

Figure 2. Series 8016G solenoid

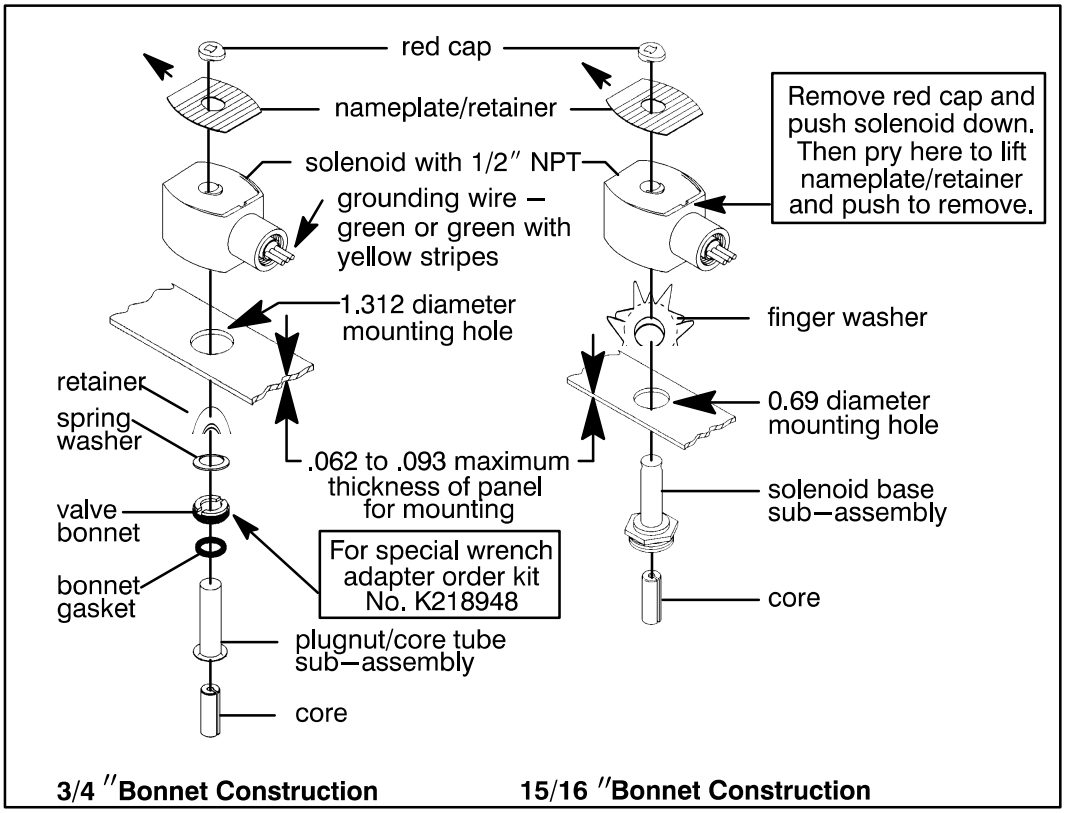

Figure 3. Series 8016G panel mounted solenoids

ASCO® 50 Hanover Road, Florham Park, New Jersey 07932 www.ascovalve.com

Torque Chart

Part Name	Torque Value in Inch—Pounds	Torque Value in Newton—Meters
terminal block screws	10 ± 2	1,1 ± 0,2
socket head screw	15 – 20	1,7 – 2,3
center screw	5 ± 1	0,6 ± 0,1

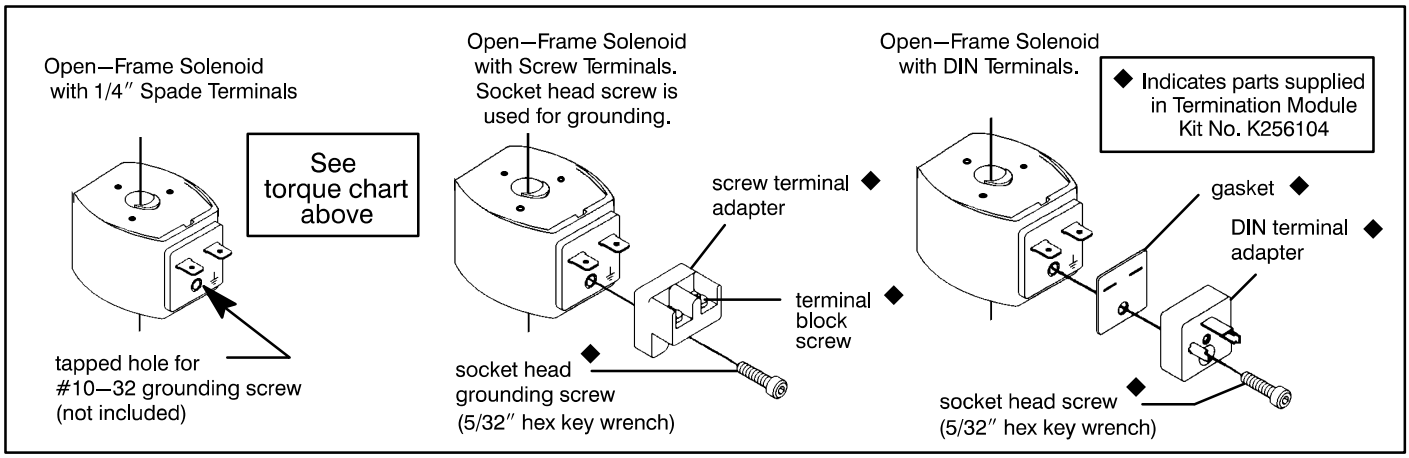

Figure 4. Open—frame solenoids

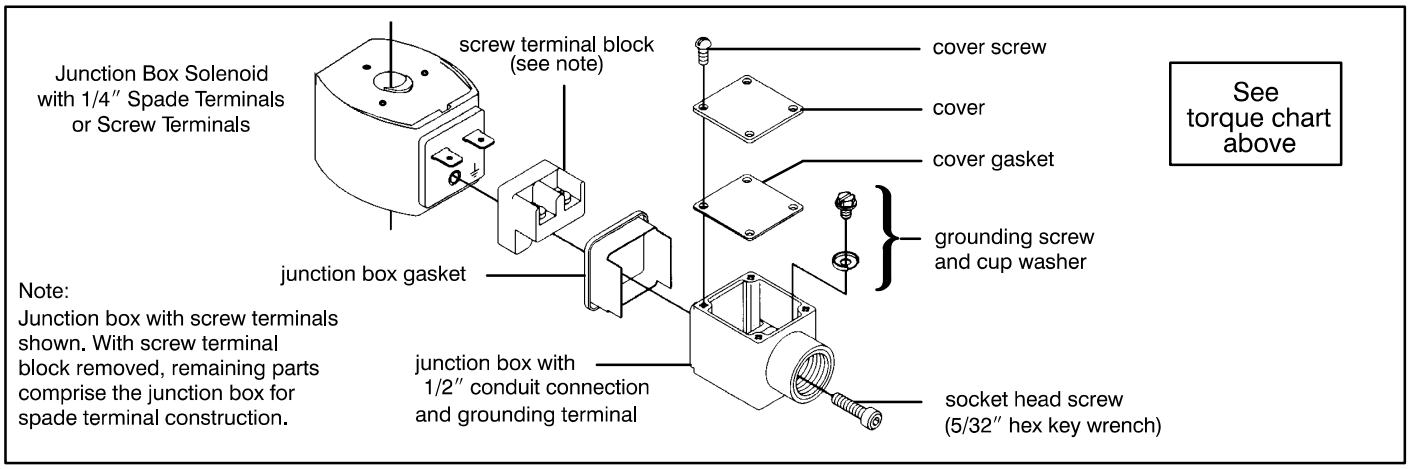

Figure 5. Junction box (optional feature)

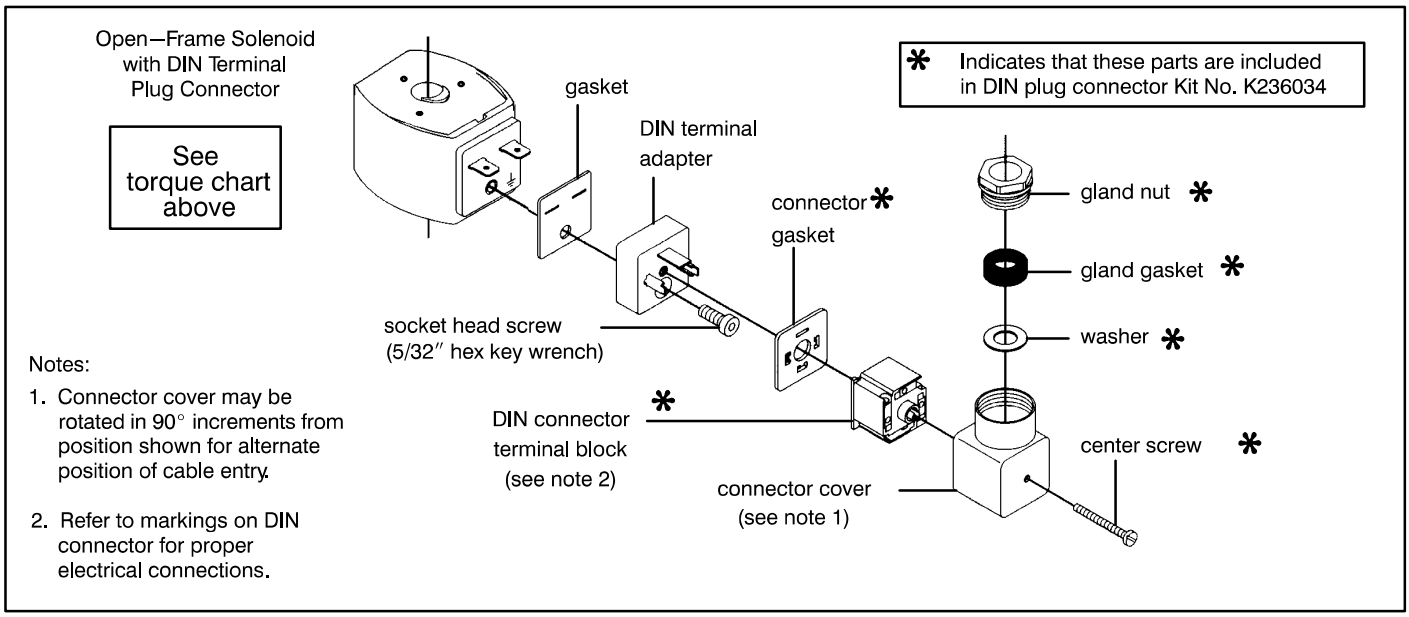

Figure 6. DIN plug connector kit No. K236034 (optional feature)

ASCO® 50 Hanover Road, Florham Park, New Jersey 07932 www.ascovalve.com

GB

GENERAL INSTALLATION AND MAINTENANCE INSTRUCTIONS

Note: These General Installation and Maintenance Instructions must be read in conjunction with the Instruction Sheet for the specific product.

INSTALLATION

ASCO/JOUCOMATIC components are intended to be used only within the technical characteristics as specified on the nameplate. Changes to the equipment are only allowed after consulting the manufacturer or its representative. Before installation depressurize the piping system and clean internally.
The equipment may be mounted in any position if not otherwise indicated on the product by means of an arrow.
The flow direction and pipe connection of valves are indicated on the body.

The pipe connections have to be in accordance with the size indicated on the nameplate and fitted accordingly.
Caution:

- Reducing the connections may cause improper operation or malfunctioning.
- For the protection of the equipment install a strainer or filter suitable for the service involved in the inlet side as close to the product as possible.
- If tape, paste, spray or a similar lubricant is used when tightening, avoid particles entering the system.
- Use proper tools and locate wrenches as close as possible to the connection point.
- To avoid damage to the equipment, DO NOT OVERTIGHTEN pipe connections.
- Do not use valve or solenoid as a lever.
- The pipe connections should not apply any force, torque or strain to the product.

ELECTRICAL CONNECTION

In case of electrical connections, they are only to be made by trained personnel and have to be in accordance with the local regulations and standards.
Caution:

- Turn off electrical power supply and de-energize the electrical circuit and voltage carrying parts before starting work.
- All electrical screw terminals must be properly tightened according to the standards before putting into service.
- Dependent upon the voltage electrical components must be provided with an earth connection and satisfy local regulations and standards

The equipment can have one of the following electrical terminals:

- Spade plug connections according to ISO-4400 or 3 x DIN-46244 (when correctly installed this connection provides IP-65 protection).
- Embedded screw terminals in metal enclosure with "Pg" cable gland.
- Spade terminals (AMP type).
- Flying leads or cables.

PUTTING INTO SERVICE

Before pressurizing the system, first carry-out an electrical test. In case of solenoid valves, energize the coil a few times and notice a metal click signifying the solenoid operation.

SERVICE

Most of the solenoid valves are equipped with coils for continuous duty service. To prevent the possibility of personal or property damage do not touch the solenoid which can become hot under normal operation conditions.

SOUND EMISSION

The emission of sound depends on the application, medium and nature of the equipment used. The exact determination of the sound level can only be carried out by the user having the valve installed in his system.

MAINTENANCE

Maintenance of ASCO/JOUCOMATIC products is dependent on service conditions. Periodic cleaning is recommended, the timing of which will depend on the media and service conditions. During servicing, components should be examined for excessive wear. A complete set of internal parts is available as a spare parts or rebuild kit. If a problem occurs during installation/maintenance or in case of doubt please contact ASCO/JOUCOMATIC or authorised representatives.

A separate Declaration of Incorporation relating to EEC- Directive 89/392/EEC Annex II B is available on request. Please provide product identification number and serial numbers of products concerned.
The product complies with the essential requirements of the EMC Directive 89/336/EEC and amendments and the Low Voltage directives 73/23/EEC and 93/68/EEC. A separate Declaration of Conformity is available on request. Please provide product identification number and serial numbers of the products concerned.

FR

INSTRUCTIONS GÉNÉRALES D'INSTALLATION ET D'ENTRETIEN

Nota : Ces instructions générales d'installation et d'entretien complètent la notice spécifique du produit.

MONTAGE

Les composants ASCO/JOUCOMATIC sont conçus pour les domaines de fonctionnement indiqués sur la plaque signalétique ou la documentation. Aucune modification ne peut être réalisée sur le matériel sans l'accord préalable du fabricant ou de son représentant. Avant de procéder au montage, dépressuriser les canalisations et effectuer un nettoyage interne.
A moins qu'une flèche ou la notice n'indique un sens de montage spécifique de la tête magnétique, le produit peut être monté dans n'importe quelle position.
Le sens de circulation du fluide est indiqué par repères sur le corps et dans la documentation.

La dimension des tuyauteries doit correspondre au raccordement indiqué sur le corps, l'étiquette ou la notice.
Attention :

- Une restriction des tuyauteries peut entraîner des dysfonctionnements.
- Afin de protéger le matériel, installer une crépine ou un filtre adéquat en amont, aussi près que possible du produit.
- En cas d'utilisation de ruban, pâte, aérosol ou autre lubrifiant lors du serrage, veiller à ce qu'aucun corps étranger ne pénètre dans le circuit.
- Utiliser un outillage approprié et placer les clés aussi près que possible du point de raccordement.
- Afin d'éviter toute détérioration, NE PAS TROP SERRER les raccords des tuyauteries.
- Ne pas se servir de la vanne ou de la tête magnétique comme d'un levier.
- Les tubes de raccordement ne devront exercer aucun effort, couple ou contrainte sur le produit.

RACCORDEMENT ÉLECTRIQUE

Le raccordement électrique doit être réalisé par un personnel qualifié et selon les normes et règlements locaux.
Attention :

- Avant toute intervention, couper l'alimentation électrique pour mettre hors tension les composants.
- Toutes les bornes à vis doivent être serrées correctement avant la mise en service.
- Selon la tension, les composants électriques doivent être mis à la terre conformément aux normes et règlements locaux.

Selon les cas, le raccordement électrique s'effectue par :

- Connecteur débrochable ISO4400 ou 3 x DIN46244 avec degré de protection IP65 lorsque le raccordement est correctement effectué.
- Bornes à vis solidaires du bobinage, sous boîtier métallique avec presse-étoupe "Pg - -".
- Cosses (type AMP).
- Fils ou câbles solidaires de la bobine.

MISE EN SERVICE

Avant de mettre le circuit sous pression, effectuer un essai électrique. Dans le cas d'une électrovanne, mettre la bobine sous tension plusieurs fois et écouter le "clic" métallique qui signale le fonctionnement de la tête magnétique.

FONCTIONNEMENT

La plupart des électrovannes comportent des bobinages prévus pour mise sous tension permanente. Pour éviter toute brûlure, ne pas toucher la tête magnétique qui, en fonctionnement normal et en permanence sous tension, peut atteindre une température élevée.

BRUIT DE FONCTIONNEMENT

Le bruit de fonctionnement varie selon l'utilisation, le fluide et le type de matériel employé. L'utilisateur ne pourra déterminer avec précision le niveau sonore émis qu'après avoir monté le composant sur l'installation.

ENTRETIEN

L'entretien nécessaire aux produits ASCO/JOUCOMATIC varie avec leurs conditions d'utilisation. Il est souhaitable de procéder à un nettoyage périodique dont l'intervalle varie suivant la nature du fluide, les conditions de fonctionnement et le milieu ambiant. Lors de l'intervention, les composants doivent être examinés pour détecter toute usure excessive. Un ensemble de pièces internes est proposé en pièces de rechange pour procéder à la réfection. En cas de problème lors du montage/entretien ou en cas de doute, veuillez contacter ASCO/JOUCOMATIC ou ses représentants officiels.

Conformément à la directive CEE 89/392/CEE Annexe II B, une Déclaration d'Incorporation peut être fournie sur demande. Veuillez nous indiquer le numéro d'accusé de réception (AR) et les références ou codes des produits concernés.
Ce produit est conforme aux prescriptions les plus importantes de la directive CEM 89/336/CEE et amendements et aux directives basse tension 73/23/CEE et 94/68/CEE. Une déclaration de conformité peut être fournie sur simple demande. Veuillez nous indiquer le numéro d'accusé de réception (AR) ainsi que les numéros de série des produits concernés.

DE

ALLGEMEINE BETRIEBSANLEITUNG

ACHTUNG: Diese Allgemeine Betriebsanleitung gilt in Zusammenhang mit der jeweiligen Betriebsanleitung für die speziellen Produkte.

EINBAU

Die ASCO/JOUCOMATIC-Komponenten dürfen nur innerhalb der auf den Typenschildern angegebenen Daten eingesetzt werden. Veränderungen an den Produkten sind nur nach Rücksprache mit ASCO/JOUCOMATIC zulässig.
Vor dem Einbau der Ventile muß das Rohrleitungssystem druckios geschaltet und innen gereinigt werden.
Die Einbaulage der Produkte ist generell beliebig. **Ausnahme:** Die mit einem Pfeil gekennzeichneten Produkte müssen entsprechend der Pfeilrichtung montiert werden.
Die Durchflußrichtung und der Eingang von Ventilen sind gekennzeichnet.

Die Rohranschlüsse sollten entsprechend den Größenangaben auf den Typenschildern mit handelsüblichen Verschraubungen durchgeführt werden. **Dabei ist folgendes zu beachten:**

- Eine Reduzierung der Anschlüsse kann zu Leistungs- und Funktionsminderungen führen.
- Zum Schutz der Ventile sollten Schmutzfänger oder Filter so dicht wie möglich in den Ventileingang integriert werden.
- Bei Abdichtung am Gewinde ist darauf zu achten, daß kein Dichtungsmaterial in die Rohrleitung oder das Ventil gelangt.
- Zur Montage darf nur geeignetes Werkzeug verwendet werden.
- Konische Verschraubungen sind sorgfältig anzuziehen. Es ist darauf zu achten, daß beim Anziehen das Gehäuse nicht beschädigt wird.
- Spule und Führungsrohr von Ventilen dürfen nicht als Gegenhalter benutzt werden.
- Die Rohrleitungsanschlüsse sollen fluchten und dürfen keine Spannungen auf das Ventil übertragen.

ELEKTRISCHER ANSCHLUß

Der elektrische Anschluß ist von Fachpersonal entsprechend den geltenden VDE- und CEE-Richtlinien auszuführen. **Es ist besonders auf folgendes zu achten:**

- Vor Beginn der Arbeiten ist sicherzustellen, daß alle elektrischen Leitungen und Netzteile spannungslos geschaltet sind.
- Alle Anschlußklemmen sind nach Beendigung der Arbeiten vorschriftsmäßig entsprechend den geltenden Regeln anzuziehen.
- Je nach Spannungsbereich muß das Ventil nach den geltenden Regeln einen Schutzleiteranschluß erhalten.

Der Magnetantrieb kann je nach Bauart folgende Anschlüsse haben:

- Anschluß für Gerätesteckdose nach DIN 43650 Form A/ISO 4400 oder 3x DIN 46244 (durch ordnungsgemäße Montage der Gerätesteckdose wird Schutzklasse IP 65 erreicht).
- Anschlüsse innerhalb eines Blechgehäuses mittels Schraubklemmen. Kabeleinführung ins Gehäuse mit PG-Verschraubung.
- Offene Spulen mit Flachsteckern (AMP-Fahnen) oder mit eingegossenen Kabelenden.

INBETRIEBNAHME

Vor Druckbeaufschlagung des Produktes sollte eine elektrische Funktionsprüfung erfolgen:
Bei Ventilen Spannung an der Magnetspule mehrmals ein- und ausschalten. **Es muß ein Klicken zu hören sein.**

BETRIEB

Die meisten Ventile sind mit Spulen für Dauerbetrieb ausgerüstet. Zur Vermeidung von Personen- und Sachschäden sollte jede Berührung mit dem Ventil vermieden werden, da die Magnetspule bei längerem Betrieb sehr heiß werden kann.

GERÄUSCHEMISSION

Diese hängt sehr stark vom Anwendungsfall, den Betriebsdaten und dem Medium, mit denen das Produkt beaufschlagt wird, ab. Eine Aussage über die Geräuschemission des Produktes muß deshalb von demjenigen getroffen werden, der das Produkt innerhalb einer Maschine in Betrieb nimmt.

WARTUNG

Die Wartung hängt von den Einsatzbedingungen ab. In entsprechenden Zeitabständen muß das Produkt geöffnet und gereinigt werden. Für die Überholung der ASCO/JOUCOMATIC-Produkte können Ersatzteilsätze geliefert werden. Treten Schwierigkeiten bei Einbau, Betrieb oder Wartung auf, sowie bei Unklarheiten, ist mit ASCO/JOUCOMATIC Rücksprache zu halten.

(ASCO/JOUCOMATIC Produkte sind entsprechend der EG-Richtlinie 89/392/EWG gefertigt.

Eine separate Herstellererklärung im Sinne der Richtlinie 89/392/EWG Anhang IIB ist auf Anfrage erhältlich. Geben Sie bitte für die Produkte die Nummer der Auftragsbestätigung und die Seriennummer an.

Dieses Produkt entspricht den grundlegenden Bestimmungen der EMV-Richtlinie 89/336/EWG, einschl. Nachtrage, sowie den Niederspannungsrichtlinien 73/23/EWG u. 93/68/EWG. Bitte geben Sie die Auftragsbestätigungsnummer und die Seriennummern der betreffenden Produkte an.

ASCO
50 Hanover Road
Florham Park, New Jersey 07932
Tel. (973) 966–2000
Fax (973) 966 2628

ASCO
1561 Columbia Highway
Aiken, South Carolina 29801
Tel. (803) 641–9200
Fax (803) 641–9290

ASCO SCIENTIFIC
50 Hanover Road
Florham Park, New Jersey 07932
Tel. (973) 236–6160
Fax (973) 966 6461

ASCO® MMII All Rights Reserved. Printed in U.S.A.

ES CE

INSTRUCCIONES GENERALES DE INSTALACION Y MANTENIMIENTO

Nota: Estas instrucciones Generales de Instalación y Mantenimiento deben considerarse en conjunción con la Hoja de Instrucciones de cada producto.

INSTALACION

Los componentes ASCO/JOUCOMATIC sólo deben utilizarse dentro de las especificaciones técnicas que se especifican en su placa de características o catálogo. Los cambios en el equipo sólo estarán permitidos después de consultar al fabricante o a su representante. Antes de la instalación despresurice el sistema de tuberías y limpie internamente.
El equipo puede utilizarse en cualquier posición si no estuviera indicado lo contrario sobre el mismo mediante una flecha o en el catálogo.
En el cuerpo o en el catálogo se indican el sentido del fluido y la conexión de las válvulas a la tubería.

Las conexiones a la tubería deben corresponder al tamaño indicado en la placa de características la etiqueta o el catálogo y ajustarse adecuadamente.
Precaución:

- La reducción de las conexiones puede causar operaciones incorrectas o defectos de funcionamiento.
- Para la protección del equipo se debe instalar, en la parte de la entrada y tan cerca como sea posible del producto, un filtro adecuado.
- Si se utilizara cinta, pasta, spray u otros lubricantes en el ajuste, se debe evitar que entren partículas en el producto.
- Se debe utilizar las herramientas adecuadas y colocar llaves inglesas lo mas cerca posible del punto de conexión.
- Para evitar daños al equipo, NO FORZAR las conexiones a la tubería.
- No utilizar la válvula o el solenoide como palanca.
- Las conexiones a la tubería no producirán ninguna fuerza, par o tensión sobre el producto.

CONEXION ELECTRICA

Las conexiones eléctricas serán realizadas por personal cualificado y deberán adaptarse a las normas y regulaciones locales.
Precaución:

- Antes de comenzar el trabajo, desconecte el suministro de energía eléctrica y desenergice el circuito eléctrico y los elementos portadores de tensión.
- Todos los teminales eléctricos deben estar apretados adecuadamente según normas antes de su puesta en servicio.
- Según el voltaje, los componentes eléctricos deben disponer de una conexión a tierra y satisfacer las normas y regulaciones locales.

El equipo puede tener uno de los siguientes terminales eléctricos:

- Conexiones desenchufables segun ISO 4400 o 3 x DIN-46244 (cuando se instala correctamente esta conexión proporciona una protección IP-65).
- Terminales de tornillo con carcasa metálica con entrada de cable de conexión roscada "PG".
- Conector desenchufable (tipo AMP).
- Salida de cables.

PUESTA EN MARCHA

Se debe efectuar una prueba eléctrica antes de someter a presión el sistema. En el caso de las válvulas solenoides, se debe energizar varias veces la bobina y comprobar que se produce un sonido metálico que indica el funcionamiento del solenoide.

SERVICIO

La mayor parte de las válvulas solenoides se suministran con bobinas para un servicio continuo. Con el fin de evitar la posibilidad de daños personales o materiales no se debe tocar el solenoide, ya que puede haberse calentado en condiciones normales de trabajo.

EMISION DE RUIDOS

La emisión de ruidos depende de la aplicación, medio y naturaleza del equipo utilizado. Una determinación exacta del nivel de ruido sólamente se puede llevar a cabo por el usuario que disponga la válvula instalada en su sistema.

MANTENIMIENTO

El mantenimiento de los productos ASCO/JOUCOMATIC depende de las condiciones de servicio. Se recomienda una limpieza periódica, dependiendo de las condiciones del medio y del servicio. Durante el servicio, los componentes deben ser examinados por si hubieran desgastes excesivos. Se dispone de un juego completo de partes internas como recambio o kit de montaje. Si ocurriera un problema durante la instalación/mantenimiento o en caso de duda contactar con ASCO/JOUCOMATIC o representantes autorizados.

Se dispone, por separado y bajo demanda, de una Declaración de incorporación conforme a la Directiva CEE 89/392/EEC Anexo II B. Rogamos que nos faciliten los códigos y números de acepta-ción de pedido correspondientes.
Este producto es conforme a las principales prescripciones de la directiva CEM 89/336/CEE y a las enmiendas y directivas baja tension 73/23/CEE y 94/68/CEE. Si lo desea, podemos facilitarle una Declaración de Conformidad por separado. Rogamos faciliten el número de confirmación de pedido y los números de serie de los respectivos productos.

IT CE

ISTRUZIONI DI INSTALLAZIONE E DI MANUTENZIONE GENERALE

Nota: Queste istruzioni devono essere lette in congiunzione con il manuale specifico del prodotto.

INSTALLAZIONE

Le elettrovalvole devono essere utilizzate esclusivamente rispettando le caratteristiche tecniche specificate sulla targhetta. Variazioni sulle valvole o sui piloti sono possinili solo dopo aver consultato il costruttore o i suoi rappresentanti. Prima dell'installazione depressurizzare i tubi e pulire internamente.
Le elettrovalvole possone essere montate in tutte le posizioni. Diversamente, una freccia posta sulla valvola indica che deve essere montata in posizione verticale e diritta.
La direzione del flusso e' indicata sul corpo della valvola per mezzo di una freccia oppure con l'etichetta "IN", "1", "A", o "P".

I raccordi devono essere conformi alla misura indicata sulla targhetta apposta.
Attenzione:

- Ridurre i raccordi puo' causare operazioni sbaiglilate o malfunzionamento.
- Per proteggere il componente installare,il più vicino possibile al lato ingresso, un filtro adatto al servizio.
- Se si usano nastro, pasta, spray o lubrificanti simili durante il serraggio, evitare che delle particelle entrino nel corpo della valvola.
- Usare un'attrezzatura appropriate e utilizzare le chiavi solo sul corpo della valvola.
- Per evitare danni al corpo della valvola, NON SERRARE ECCESSIVAMENTE i tubi.
- Non usare la valvola o il pilota come una leva.
- I raccordi non devono esercitare pressione, torsione o sollecitazione sull'elettrovalvola.

ALLACCIAMENTO ELETTRICO

L'allacciamento elettrico deve essere effetuato esclusivamente dal personale specializzato e deve essere conforme alle Norme locali.
Attensione:

- Prima di mettere in funzione togliere l'alimentazione elettrica, diseccitare il circuito elettrico e le parti sotto tensione.
- I morsetti elettrici devono essere correttamente avvitati, secondo le Norme, prima della messa in servizio.
- Le elettrovalvole devone essere provviste di morsetti di terra a seconda della tensione e delle Norme di sicurezza locali.

I piloti possono avere una delle seguenti caratteristiche elettrice:

- Connettore ISO-4400 o 3 x DIN-46244 (se installato correttamente e' IP-65).
- Morsetteria racchiusa in custodia metallica. Entrata cavi con pressacavi tipo "PG".
- Bobina con attacchi FASTON (tipo AMP).
- Bobine con fili o cavo.

MESSA IN FUNZIONE

Prima di dare pressione alla valvoa, eseguire un test elettrico. Eccitare la bobina diverse volte fino a notare uno scatto metallico che dimostra il funzionamento del pilota.

SERVIZIO

Molte elettrovalvole sono provviste di bobine per funzionamento continuo. Per prevenire la possibilita' di danneggiare cose o persone, non toccare il pilota.
La custodia della bobina o del pilota puo' scaldarsi anche in normali condizioni di funzionamento.

EMISSIONE SUONI

L'emissione di suoni dipende dall'applicazione e dal tipo di elettrovalvola. L'utente puo' stabilire esattamente il livello del suono solo dopo aver installato la valvola sul suo impianto.

MANUTENZIONE

Generalmente questi componenti non necessitano spesso di manutenzione. Comunque, in alcuni casi e' necessario fare attenzione a depositi o ad eccessiva usura. Questi componenti devono essere puliti periodicamente, il tempo che intercorre tra una pulizia e l'altra varia a seconda delle condizioni di funzionamento. Il ciclo di durata dei componenti dipende dalle condizioni di funzionamento. Incaso di usura e' disponibile un set completo di parti interne per per la revisione.
Se si incontrano problemi durante l'installazione e la manutenzione o se si hanno dei dubbi, consultare ASCO/JOUCOMATIC o i suoi rappresentanti.

L'utente puo'richiedere al costruttore una dichiarazione separate riguardante le Direttive EEC 89/392/EEC e 91/368/EEC (vedere allegato II B) fornendo il numero di serie e il riferimento dell'ordine relativo.
Questo prodotto soddisfa i requisiti essenziali della direttiva CEM 89/336/CEE nonche' gli emendamenti e le direttive sulla bassa tensione 73/23/CEE e 93/68/CEE. Una Dichiarazione di Conformità separata può essere ottenuta su richiesta. Si prega di fornire il numero della conferma dell'ordinativo ed i numeri di serie dei relativi prodotti.

NL CE

ALGEMENE INSTALLATIE- EN ONDERHOUDSINSTRUKTIES

N.B.: Deze algemene instrukties t.a.v. installatie en onderhoud moeten in acht worden genomen tezamen met de specifieke voorschriften van het produkt.

INSTALLATIE

ASCO/JOUCOMATIC produkten mogen uitsluitend toegepast worden binnen de op de naamplaat aangegeven specificaties. Wijzigingen, zowel elektrisch als mechanisch, zijn alleen toegestaan na overleg met de fabrikant of haar vertegenwoordiger. Voor het inbouwen dient het leidingssysteem drukloos gemaakt te worden en inwendig gereinigd.
De positie van de afsluiter is naar keuze te bepalen, behalve in die gevallen waarbij het tegendeel door pijlen wordt aangegeven.
De doorstroomrichting wordt bij afsluiters aangegeven op het afsluiterhuis.

De pijpaansluiting moet overeenkomstig de naamplaatgegevens plaatsvinden.
Hierbij moet men letten op:

- Een reductie van de aansluitingen kan tot prestatie- en funktie-stoornis leiden.
- Ter bescherming van de interne delen wordt een filter in het leidingnet aanbevolen.
- Bij het gebruik van draadafdichtingspasta of tape mogen er geen deeltjes in het leidingwerk geraken.
- Men dient uitsluitend geschikt gereedschap voor de montage te gebruiken.
- Bij konische/tapse koppelingen moet met een zodanig koppel worden gewerkt dat het produkt niet wordt beschadigd.
- Het produkt, de behuizing of de spoel mag niet als hefboom worden gebruikt.
- De pijpaansluitingen mogen geen krachten of momenten op het produkt overdragen.

ELEKTRISCHE AANSLUITING

In geval van elektrische aansluiting dient dit door vakkundig personeel te worden uitgevoerd volgens de door de plaatselijke overheid bepaalde richtlijnen.
Men dient in het bijzonder te letten op:

- Voordat men aan het werk begint moeten alle spanningsvoerende delen spanningsloos worden gemaakt.
- Alle aansluitklemmen moeten na het beëindigen van het werk volgens de juiste normen worden aangedraaid.
- Al naar gelang het spanningsbereik, moet het produkt volgens de geldende normen van een aarding worden voorzien.

Het produkt kan de volgende aansluitingen hebben:

- Stekeraansluiting volgens ISO-4400 of 3x DIN-46244 (bij juiste montage wordt de dichtheidsklasse IP-65 verkregen).
- Aansluiting binnen in het metalen huis d.m.v. schroefaansluiting. De kabeldoorvoer heeft een "PG" aansluiting.
- Spoelen met platte steker (AMP type).
- Losse of aangegoten kabels

IN GEBRUIK STELLEN

Voordat de druk aangesloten wordt dient een elektrische test te worden uitgevoerd. Ingeval van magneetafsluiters, legt men meerdere malen spanning op de spoel aan waarbij een duidelijk "klikken" hoorbaar moet zijn bij juist funktioneren.

GEBRUIK

De meeste magneetafsluiters zijn uitgevoerd met spoelen voor continu gebruik. Omdat persoonlijke of zakelijke schade kan ontstaan bij aanraking dient men dit te vermijden, daar bij langdurige inschakeling de spoel of het spoelhuis heet kan worden.

GELUIDSEMISSIE

Dit hangt sterk af van de toepassing en het gebruikte medium. De bepaling van het geluidsniveau kan pas uitgevoerd worden nadat het ventiel is ingebouwd.

ONDERHOUD

Het onderhoud aan de afsluiters is afhankelijk van de bedrijfs-omstandigheden.
In bepaalde gevallen moet men bedacht zijn op media welke sterke vervuiling binnen in het produkt kunnen veroorzaken.
Men dient dan regelmatig inspecties uit te voeren door de afsluiter te openen en te reinigen. Indien ongewone slijtage optreedt dan zijn reserve onderdelensets beschikbaar om een inwendige revisie uit te voeren.
Ingeval problemen of onduidelijkheden tijdens montage, gebruik of onderhoud optreden dan dient men zich tot ASCO of haar vertegenwoordiger te wenden.

Een aparte fabrikanten verklaring van inbouw, in de zin van EU-richtlijn 89/392/EEG aanhangsel IIB kan door de afnemer na opgave van orderbevestigingsnummer en serienummer verkregen worden.
Dit product voldoet aan de essentiele vereisten van de EMC Richtlijn 89/336/EEG en amendementen, net als aan de richtlijnen 73/23/EEG en 93/68/EEG inzake laagspanning. Een afzonderlijke verklaring van overeenstemming is op verzoek verkrijgbaar. Vermeld a.u.b. het nummer van de opdrachtbevestiging en de serienummers van de betreffende produkten.

ASCOMATICA S.A. de C.V.
Bosques de Duraznos No. 65—1003A
Fraccionamiento Bosques de las Lomas
Delegacion Miguel Hildago
Mexico, D.F. CP11700
Tel: (52)—55—5596—7741
Fax: (52)—55—5596—7719

ASCO Valve Canada
P.O. Box 160 (Airport Road)
Brantford, Ontario N3T 5M8
Tel: (519) 758—2700
Fax: (519)758—5540

ASCOTECH S.A. de C.V.
Circuito Del Progreso No.27
Parque Industrial Progreso
Mexicali, B.C. Mexico
Tel: (011)—52—686—559—8500
Fax: (011)—52—686—559—8548

ASCO® MMII All Rights Reserved.

50 Hanover Road, Florham Park, New Jersey 07932
www.ascovalve.com Printed in U.S.A.

TABLE OF CONTENTS

Series	General Description	Pipe Size	Body Material	Page
8030	Low Pressure	3/8" - 3/4"	Brass and Stainless Steel	1
8040/8215	High Flow Gas/ High Air Valves	3/8" - 3"	Aluminum	5
8210	General Service	3/8" - 2 1/2"	Brass and Stainless Steel	9
8221	Slow Closing	3/8" - 2 1/2"	Brass	15
8223	High Pressure	1/4" - 3/4"	Brass and Stainless Steel	19
8225/8280	Sub-Miniature	1/8"	Brass and Stainless Steel	21
8260	Dispensing/Bib Connection	1/4"	Plastic	23
8262/8263	General Service Compact	1/8" - 3/8"	Brass and Stainless Steel	27

These solenoid valves have one inlet and one outlet, and are used to permit and shut off fluid flow.

Two Types of Operations Apply:

Normally Closed
Fluid is shut off when the coil is de-energized, flows through the valve when the coil is energized.

Normally Open
Fluid flows through the valve when the coil is de-energized, shuts off when the coil is energized.

Two Types of Constructions Apply:

Direct Acting
When the solenoid is energized, the core directly opens the orifice of a Normally Closed valve or closes the orifice in a Normally Open valve. The valve will operate at pressures from 0 psi to its rated maximum. The force needed to open the valve is proportional to the orifice size and fluid pressure. As orifice size increases, so does the required force. To open larger orifices without increasing solenoid size, internal pilots are used.

Internally Piloted
These valves use line pressure to assist operation.

When the coil is de-energized (on a Normally Closed valve), the pilot orifice is closed and line pressure is applied to the top of the piston or diaphragm through the bleed orifice, closing the valve. When the coil is energized, the core opens the pilot orifice, relieving pressure from the diaphragm or piston. Line pressure, alone, opens the valve by lifting the diaphragm or piston off the main orifice.

See Engineering Section for further details.

Standard and Optional Features:

Solenoid valves are supplied, as listed, with either Red-Hat II® molded epoxy solenoids or Red-Hat® solenoids with metal enclosures. Red-Hat II valves are identified by the letter "G" or "H" in their catalog numbers; e.g., 8030***G***16. Many optional features may be added to your valves; e.g., high-temperature Class H molded coils, manual operators, and metering devices.

2 Way/2 Position Valves Flow Diagrams

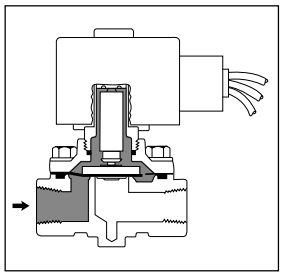

Normally Closed Valve De-Energized

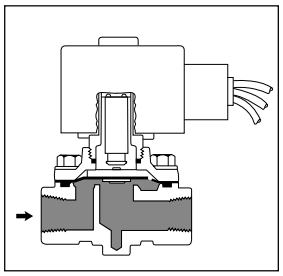

Normally Closed Valve Energized

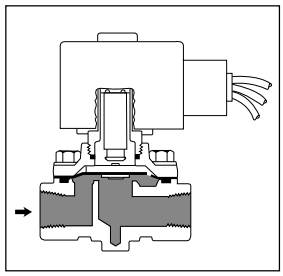

Normally Open Valve De-Energized

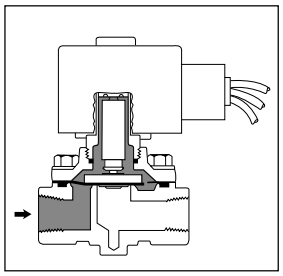

Normally Open Valve Energized

ASCO® Red-Hat®

Pilot Operated
General Service Solenoid Valves
Brass or Stainless Steel Bodies
3/8" to 2 1/2" NPT

NC
NO

2/2
SERIES
8210

Features

- Wide range of pressure ratings, sizes, and resilient materials provide long service life and low internal leakage.
- High Flow Valves for liquid, corrosive, and air/inert gas service.
- Industrial applications include:
  - Car wash
  - Laundry equipment
  - Air compressors
  - Industrial water control
  - Pumps

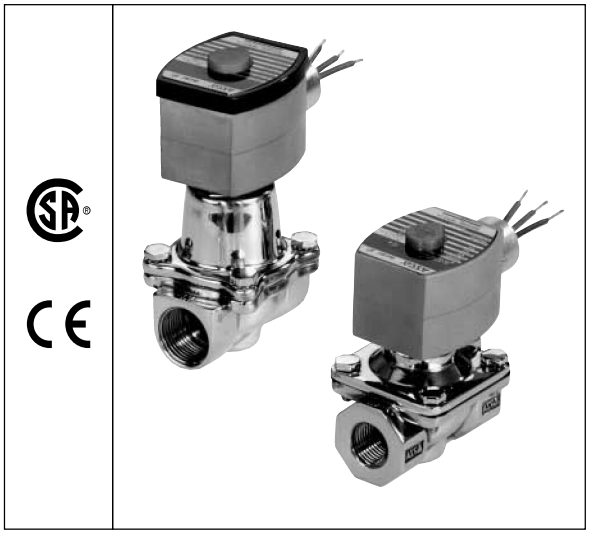

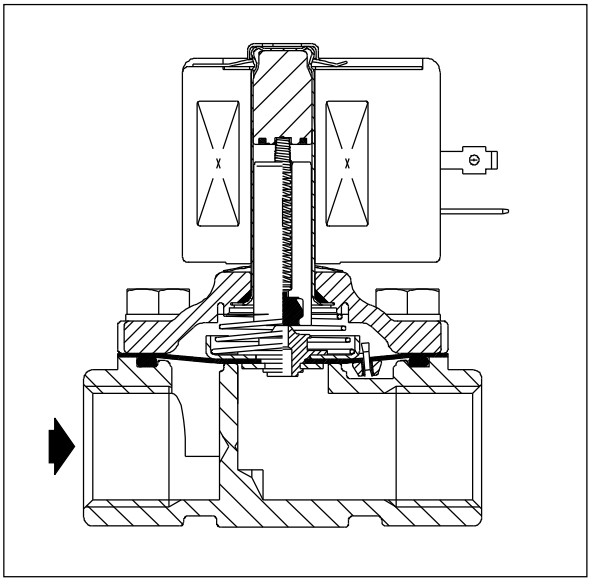

Construction

Valve Parts in Contact with Fluids		
Body	Brass	304 Stainless Steel
Seals and Discs	NBR or PTFE	
Disc-Holder	PA	
Core Tube	305 Stainless Steel	
Core and Plugnut	430F Stainless Steel	
Springs	302 Stainless Steel	
Shading Coil	Copper	Silver

Electrical

Standard Coil and Class of Insulation	Watt Rating and Power Consumption				Spare Coil Part Number			
		AC			General Purpose		Explosionproof	
	DC Watts	Watts	VA Holding	VA Inrush	AC	DC	AC	DC
F	-	6.1	16	40	238210	-	238214	-
F	11.6	10.1	25	70	238610	238710	238614	238714
F	16.8	16.1	35	180	272610	97617	272614	97617
F	-	17.1	40	93	238610	-	238614	-
F	-	20	43	240	99257	-	99257	-
F	-	20.1	48	240	272610	-	272614	-
H	30.6	-	-	-	-	74073	-	74073
F	40.6	-	-	-	-	238910		238914

Standard Voltages: 24, 120, 240, 480 volts AC, 60 Hz (or 110, 220 volts AC, 50 Hz). 6, 12, 24, 120, 240 volts DC. Must be specified when ordering. Other voltages available when required.

Solenoid Enclosures

Standard: Red-Hat II - Watertight, Types 1, 2, 3, 3S, 4, and 4X; Red-Hat - Type I.
Optional: Red-Hat II - Explosionproof and Watertight, Types 3, 3S, 4, 4X, 6, 6P, 7, and 9; Red-Hat - Explosionproof and Watertight, Types 3, 4, 4X, 7, and 9.
(To order, add prefix "EF" to catalog number, except Catalog Numbers 8210B57, 8210B58, and 8210B59. Valves not available with Explosionproof enclosures.)

Nominal Ambient Temperature Ranges:

Red-Hat II/
Red-Hat AC: 32˚F to 125˚F (0˚C to 52˚C)
Red-Hat II DC: 32˚F to 104˚F (0˚C to 40˚C)
Red-Hat DC: 32˚F to 77˚F (0˚C to 25˚C)
(104˚F/40˚C occasionally)

Approvals:

CSA certified. Red-Hat II meets applicable CE directives.

Specifications (English units)

Pipe Size (ins.)	Orifice Size (ins.)	Cv Flow Factor	Operating Pressure Differential (psi) Min.	Max. AC Air-Inert Gas	Max. AC Water	Max. AC Light Oil @ 300 SSU	Max. DC Air-Inert Gas	Max. DC Water	Max. DC Light Oil @ 300 SSU	Max. Fluid Temp. °F AC	Max. Fluid Temp. °F DC	Brass Body Catalog Number	Brass Body Constr. Ref. No. ④	Brass Body UL ⑤ Listing	Stainless Steel Body Catalog Number	Stainless Steel Body Constr. Ref. No. ④	Stainless Steel Body UL ⑤ Listing	Watt Rating/ Class of Coil Insulation ⑦ AC	Watt Rating/ Class of Coil Insulation ⑦ DC
NORMALLY CLOSED (Closed when de-energized), NBR or PTFE ② Seating																			
3/8	3/8	1.5	①	150	125	-	40	40	-	180	150	8210G73 ③	1P	●	8210G36 ③	1P	●	6.1/F	11.6/F
3/8	5/8	3	0	150	150	-	40	40	-	180	150	8210G93	5D	❍	-	-	-	10.1/F	11.6/F
3/8	5/8	3	5	200	150	135	125	100	100	180	150	8210G1	6D	❍	-	-	-	6.1/F	11.6/F
3/8	5/8	3	5	300	300	300	-	-	-	175	-	8210G6	5D	❍	-	-	-	17.1/F	-
1/2	7/16	2.2	①	150	125	-	40	40	-	180	150	8210G15 ③	2P	●	8210G37 ③	2P	●	6.1/F	11.6/F
1/2	5/8	4	0	150	150	-	40	40	-	180	150	8210G94	5D	❍	-	-	-	10.1/F	11.6/F
1/2	5/8	4	0	150	150	125	40	40	-	175	150	-	-	-	8210G87	7D	●	17.1/F	11.6/F
1/2	5/8	4	5	200	150	135	125	100	100	180	150	8210G2	6D	❍	-	-	-	6.1/F	11.6/F
1/2	5/8	4	5	300	300	300	-	-	-	175	-	8210G7	5D	❍	-	-	-	17.1/F	-
1/2	5/8	4	5	300	300	-	300	300	-	180	125	8210G227	5D	❍	-	-	-	17.1/F	40.6/H
3/4	5/8	4.5	0	150	150	125	40	40	-	175	150	-	-	-	8210G88	7D	●	17.1/F	11.6/F
3/4	3/4	5	5	125	125	125	100	90	75	180	150	8210G9	9D	❍	-	-	-	6.1/F	11.6/F
3/4	3/4	5	0	150	150	-	40	40	-	180	150	8210G95	8D	❍	-	-	-	10.1/F	11.6/F
3/4	3/4	6.5	5	250	150	100	125	125	125	180	150	8210G3	11D	❍	-	-	-	6.1/F	11.6/F
3/4	3/4	6	0	-	-	-	200	180	180	-	77	8210B26 ② ‡	10P	-	-	-	-	-	30.6/H
3/4	3/4	6	0	350	300	200	-	-	-	200	-	8210G26 ② ‡	40P	●	-	-	-	16.1F	-
1	1	13	0	-	-	-	100	100	80	-	77	8210B54 ‡	31D	-	8210D89	15D	-	-	30.6/H
1	1	13	0	150	125	125	-	-	-	180	-	8210G54	41D	●	8210G89	45D	●	16.1/F	-
1	1	13	5	150	150	100	125	125	125	180	150	8210G4	12D	❍	-	-	-	6.1/F	11.6/F
1	1	13.5	0	300	225	115	-	-	-	200	-	8210G27 ‡	42P	●	-	-	-	20.1/F	-
1	1	13.5	10	300	300	300	-	-	-	175	-	8210G78	3P	-	-	-	-	17.1/F	-
1 1/4	1 1/8	15	0	-	-	-	100	100	80	-	77	8210B55 ‡	32D	-	-	-	-	-	30.6/H
1 1/4	1 1/8	15	0	150	125	125	-	-	-	180	-	8210G55	43D	●	-	-	-	16.1/F	-
1 1/4	1 1/8	15	5	150	150	100	125	125	125	180	150	8210G8	16D	❍	-	-	-	6.1/F	11.6/F
1 1/2	1 1/4	22.5	0	-	-	-	100	100	80	-	77	8210B56 ‡	33D	-	-	-	-	-	30.6/H
1 1/2	1 1/4	22.5	0	150	125	125	-	-	-	180	-	8210G56 ‡	44D	●	-	-	-	16.1/F	-
1 1/2	1 1/4	22.5	5	150	150	100	125	125	125	180	150	8210G22	18D	●	-	-	-	6.1/F	11.6/F
2	1 3/4	43	5	150	125	90	50	50	50	180	150	8210G100	20P	●	-	-	-	6.1/F	11.6/F
2 1/2	1 3/4	45	5	150	125	90	50	50	50	180	150	8210G101	21P	●	-	-	-	6.1/F	11.6/F
NORMALLY OPEN (Open when de-energized), NBR Seating (PA Disc-Holder, except as noted)																			
3/8	5/8	3	0	150	150	125	125	125	80	180	150	8210G33	23D	●	-	-	-	10.1/F	11.6/F
3/8	5/8	3	5	250	200	200	250	200	200	180	180	8210G11 ⑧ ⑨	39D	●	-	-	-	10.1/F	11.6/F
1/2	5/8	4	0	150	150	125	125	125	80	180	150	8210G34	23D	●	-	-	-	10.1/F	11.6/F
1/2	5/8	3	0	150	150	100	125	125	80	180	150	-	-	-	8210G30	37D	●	10.1/F	11.6/F
1/2	5/8	4	5	250	200	200	250	200	200	180	180	8210G12 ⑧ ⑨	39D	●	-	-	-	10.1/F	11.6/F
3/4	3/4	5.5	0	150	150	125	125	125	80	180	150	8210G35	25D	●	-	-	-	10.1/F	11.6/F
3/4	5/8	3	0	150	150	100	125	125	80	180	150	-	-	-	8210G38	38D	●	10.1/F	11.6/F
3/4	3/4	6.5	5	-	-	-	250	200	200	-	180	8210C13	24D	●	-	-	-	-	16.8/F
3/4	3/4	6.5	5	250	200	200	-	-	-	180	-	8210G13	46D	●	-	-	-	16.1/F	-
1	1	13	0	125	125	125	-	-	-	180	-	8210B57 ⑥ ⑩	34D	●	-	-	-	20/F	-
1	1	13	5	-	-	-	125	125	125	-	180	8210D14	26D	●	-	-	-	-	16.8/F
1	1	13	5	150	150	125	-	-	-	180	-	8210G14	47D	●	-	-	-	16.1/F	-
1 1/4	1 1/8	15	0	125	125	125	-	-	-	180	-	8210B58 ⑥ ⑩	35D	●	-	-	-	20/F	-
1 1/4	1 1/8	15	5	-	-	-	125	125	125	-	180	8210D18	28D	●	-	-	-	-	16.8/F
1 1/4	1 1/8	15	5	150	150	125	-	-	-	180	-	8210G18	48D	●	-	-	-	16.1/F	-
1 1/2	1 1/4	22.5	0	125	125	125	-	-	-	180	-	8210B59 ⑥ ⑩	36D	●	-	-	-	20/F	-
1 1/2	1 1/4	22.5	5	-	-	-	125	125	125	-	180	8210D32	29D	●	-	-	-	-	16.8/F
1 1/2	1 1/4	22.5	5	150	150	125	-	-	-	180	-	8210G32	49D	●	-	-	-	16.1/F	-
2	1 3/4	43	5	-	-	-	125	125	125	-	150	8210103	30P	●	-	-	-	-	16.8/F
2	1 3/4	43	5	125	125	125	-	-	-	180	-	8210G103	50P	●	-	-	-	16.1/F	-
2 1/2	1 3/4	45	5	-	-	-	125	125	125	-	150	8210104	27P	●	-	-	-	-	16.8/F
2 1/2	1 3/4	45	5	125	125	125	-	-	-	180	-	8210G104	51P	●	-			16.1/F	-

Notes: ① 5 psi on Air; 1 psi on Water.
② Valve provided with PTFE main disc.
③ Valve includes Ultem (G.E. trademark) piston.
④ Letter "D" denotes diaphragm construction; "P" denotes piston construction.
⑤ ❍ Safety Shutoff Valve; ● General Purpose Valve.
Refer to Engineering Section (Approvals) for details.
⑥ Valves not available with Explosionproof enclosures.
⑦ On 50 hertz service, the watt rating for the 6.1/F solenoid is 8.1 watts.
⑧ AC construction also has PA seating.
⑨ No disc-holder.
⑩ Stainless Steel disc-holder.
‡ Must have solenoid mounted vertical and upright.

ASCO®

Specifications (Metric units)

Pipe Size (ins.)	Orifice Size (mm)	Kv Flow Factor (m3/h)	Operating Pressure Differential (bar)							Max. Fluid Temp. °C		Brass Body			Stainless Steel Body			Watt Rating/ Class of Coil Insulation ⑦	
				Max. AC			Max. DC												
			Min.	Air-Inert Gas	Water	Light Oil @ 300 SSU	Air-Inert Gas	Water	Light Oil @ 300 SSU	AC	DC	Catalog Number	Constr. Ref. No. ④	UL ⑤ Listing	Catalog Number	Constr. Ref. No. ④	UL ⑤ Listing	AC	DC
NORMALLY CLOSED (Closed when de-energized), NBR or PTFE ② Seating																			
3/8	10	1.29	①	10	9	-	3	3	-	81	65	8210G73 ③	1P	●	8210G36 ③	1P	●	6.1/F	11.6/F
3/8	16	2.57	0	10	10	-	3	3	-	81	65	8210G93	5D	❍	-	-	-	10.1/F	11.6/F
3/8	16	2.57	0.3	14	10	9	9	7	7	81	65	8210G1	6D	❍	-	-	-	6.1/F	11.6/F
3/8	16	2.57	0.3	21	21	21	-	-	-	79	-	8210G6	5D	❍	-	-	-	17.1/F	-
1/2	11	1.89	①	10	9	-	3	3	-	81	65	8210G15 ③	2P	●	8210G37 ③	2P	●	6.1/F	11.6/F
1/2	16	3.43	0	10	10	-	3	3	-	81	65	8210G94	5D	❍	-	-	-	10.1/F	11.6/F
1/2	16	3.43	0	10	10	9	3	3	-	79	65	-	-	-	8210G87	7D	●	17.1/F	11.6/F
1/2	16	3.43	0.3	14	10	9	9	7	7	81	65	8210G2	6D	❍	-	-	-	6.1/F	11.6/F
1/2	16	3.43	0.3	21	21	21	-	-	-	79	-	8210G7	5D	❍	-	-	-	17.1/F	-
1/2	16	3.43	0.3	21	21	-	21	21	-	81	52	8210G227	5D	❍	-	-	-	17.1/F	40.6F
3/4	16	3.86	0	10	10	9	3	3	-	79	65	-	-	-	8210G88	7D	●	17.1/F	11.6/F
3/4	19	4.29	0.3	9	9	9	7	6	5	81	65	8210G9	9D	❍	-	-	-	6.1/F	11.6/F
3/4	19	4.29	0	10	10	-	3	3	-	81	65	8210G95	8D	❍	-	-	-	10.1/F	11.6/F
3/4	19	5.57	0.3	17	10	7	9	9	9	81	65	8210G3	11D	❍	-	-	-	6.1/F	11.6/F
3/4	19	5.14	0	-	-	-	14	12	12	-	25	8210B26 ② ‡	10P	-	-	-	-	-	30.6/H
3/4	19	5.14	0	24	21	14	-	-	-	92	-	8210G26 ② ‡	40P	●	-	-	-	16.1F	-
1	25	11.14	0	-	-	-	7	7	6	-	25	8210B54 ‡	31D	-	8210D89	15D	-	-	30.6/H
1	25	11.14	0	10	9	9	-	-	-	81	-	8210G54	41D	●	8210G89	45D	●	16.1/F	-
1	25	11.14	0.3	10	10	7	9	9	9	81	65	8210G4	12D	❍	-	-	-	6.1/F	11.6/F
1	25	11.57	0	21	16	8	-	-	-	92	-	8210G27 ‡	42P	●	-	-	-	20.1/F	-
1	25	11.57	0.7	21	21	21	-	-	-	79	-	8210G78	3P	-	-	-	-	17.1/F	-
1 1/4	29	12.86	0	-	-	-	7	7	6	-	25	8210B55 ‡	32D	-	-	-	-	-	30.6/H
1 1/4	29	12.86	0	10	9	9	-	-	-	81	-	8210G55	43D	●	-	-	-	16.1/F	-
1 1/4	29	12.86	0.3	10	10	7	9	9	9	81	65	8210G8	16D	❍	-	-	-	6.1/F	11.6/F
1 1/2	32	19.29	0	-	-	-	7	7	6	-	25	8210B56 ‡	33D	-	-	-	-	-	30.6/H
1 1/2	32	19.29	0	10	9	9	-	-	-	81	-	8210G56 ‡	44D	●	-	-	-	16.1/F	-
1 1/2	32	19.29	0.3	10	10	7	9	9	9	81	65	8210G22	18D	●	-	-	-	6.1/F	11.6/F
2	44	36.86	0.3	10	9	6	3	3	3	81	65	8210G100	20P	●	-	-	-	6.1/F	11.6/F
2 1/2	44	38.57	0.3	10	9	6	3	3	3	81	65	8210G101	21P	●	-	-	-	6.1/F	11.6/F
NORMALLY OPEN (Open when de-energized), NBR Seating (PA Disc-Holder, except as noted)																			
3/8	16	2.57	0.0	10	10	9	9	9	6	81	65	8210G33	23D	●	-	-	-	10.1/F	11.6/F
3/8	16	2.57	0.3	17	14	14	17	14	14	81	81	8210G11 ⑧ ⑨	39D	●	-	-	-	10.1/F	11.6/F
1/2	16	3.43	0	10	10	9	9	9	6	81	65	8210G34	23D	●	-	-	-	10.1/F	11.6/F
1/2	16	2.57	0	10	10	7	9	9	6	81	65	-	-	-	8210G30	37D	●	10.1/F	11.6/F
1/2	16	3.43	0.3	17	14	14	17	14	14	81	81	8210G12 ⑧ ⑨	39D	●	-	-	-	10.1/F	11.6/F
3/4	19	4.71	0	10	10	9	9	9	6	81	65	8210G35	25D	●	-	-	-	10.1/F	11.6/F
3/4	16	2.57	0	10	10	7	9	9	6	81	65	-	-	-	8210G38	38D	●	10.1/F	11.6/F
3/4	19	5.57	0.3	-	-	-	17	14	14	-	81	8210C13	24D	●	-	-	-	-	16.8/F
3/4	19	5.57	0.3	17	14	14	-	-	-	81	-	8210G13	46D	●	-	-	-	16.1/F	-
1	25	11.14	0	9	9	9	-	-	-	81	-	8210B57 ⑥ ⑩	34D	●	-	-	-	20/F	-
1	25	11.14	0.3	-	-	-	9	9	9	-	81	8210D14	26D	●	-	-	-	-	16.8/F
1	25	11.14	0.3	10	10	9	-	-	-	81	-	8210G14	47D	●	-	-	-	16.1/F	-
1 1/4	29	12.86	0	9	9	9	-	-	-	81	-	8210B58 ⑥ ⑩	35D	●	-	-	-	20/F	-
1 1/4	29	12.86	0.3	-	-	-	9	9	9	-	81	8210D18	28D	●	-	-	-	-	16.8/F
1 1/4	29	12.86	0.3	10	10	9	-	-	-	81	-	8210G18	48D	●	-	-	-	16.1/F	-
1 1/2	32	19.29	0	9	9	9	-	-	-	81	-	8210B59 ⑥ ⑩	36D	●	-	-	-	20/F	-
1 1/2	32	19.29	0.3	-	-	-	9	9	9	-	81	8210D32	29D	●	-	-	-	-	16.8/F
1 1/2	32	19.29	0.3	10	10	9	-	-	-	81	-	8210G32	49D	●	-	-	-	16.1/F	-
2	44	36.86	0.3	-	-	-	9	9	9	-	65	8210103	30P	●	-	-	-	-	16.8/F
2	44	36.86	0.3	9	9	9	-	-	-	81	-	8210G103	50P	●	-	-	-	16.1/F	-
2 1/2	44	38.57	0.3	-	-	-	9	9	9	-	65	8210104	27P	●	-	-	-	-	16.8/F
2 1/2	44	38.57	0.3	9	9	9	-	-	-	81	-	8210G104	51P	●	-	-	-	16.1/F	-

Notes:
① 0.3 bar on Air; 0.0 bar on Water.
② Valve provided with PTFE main disc.
③ Valve includes Ultem (G.E. trademark) piston.
④ Letter "D" denotes diaphragm construction; "P" denotes piston construction.
⑤ ❍ Safety Shutoff Valve; ● General Purpose Valve. Refer to Engineering Section (Approvals) for details.
⑥ Valves not available with Explosionproof enclosures.
⑦ On 50 hertz service, the watt rating for the 6.1/F solenoid is 8.1 watts.
⑧ AC construction also has PA seating.
⑨ No disc-holder.
⑩ Stainless Steel disc-holder.
‡ Must have solenoid mounted vertical and upright.

Dimensions: inches (mm)

Constr. Ref. No.		H	K	L	P	W
1*	ins.	3.85	3.00	1.91	3.41	1.69
	mm	98	76	49	87	43
2*	ins.	4.17	3.25	2.28	3.63	1.69
	mm	106	83	58	92	43
3	ins.	4.44	3.22	3.75	4.19	5.81
	mm	113	82	95	106	147
5	ins.	3.84	2.31	2.75	3.28	2.28
	mm	98	59	70	83	58
6*	ins.	3.38	1.94	2.75	2.80	2.28
	mm	86	49	70	71	58
7	ins.	4.19	2.50	2.81	3.47	2.39
	mm	106	64	71	88	61
8	ins.	4.13	2.47	2.81	3.44	2.29
	mm	105	63	71	87	58
9*	ins.	3.66	2.10	2.81	2.96	2.28
	mm	93	53	71	75	58
10*①	ins.	5.25	X	2.81	4.59	2.31
	mm	133	X	71	117	59
11*	ins.	4.16	2.66	3.84	3.52	2.75
	mm	106	68	98	89	70
15*	ins.	5.34	X	3.75	4.47	3.84
	mm	136	X	95	114	98
20*	ins.	7.33	3.71	5.06	4.57	4.87
	mm	186	94	129	116	124
21*	ins.	7.33	3.71	5.50	4.57	4.87
	mm	186	94	140	116	124
23	ins.	4.35	2.65	2.75	3.79	2.28
	mm	110	67	70	96	58
24	ins.	5.06	X	3.78	4.44	2.75
	mm	129	X	96	113	70
25	ins.	4.64	2.81	2.81	3.94	2.28
	mm	118	71	71	100	58
26	ins.	6.53	X	3.75	4.91	3.19
	mm	166	X	95	125	81
27	ins.	8.22	X	5.50	5.47	4.87
	mm	209	X	140	139	124
28	ins.	6.53	X	3.66	4.91	3.19
	mm	166	X	93	125	81
29	ins.	7.03	X	4.38	5.06	4.40
	mm	179	X	111	129	112

① Valves must be mounted with solenoid vertical and upright.
* DC dimensions slightly larger.

Constr. Refs. 1, 2

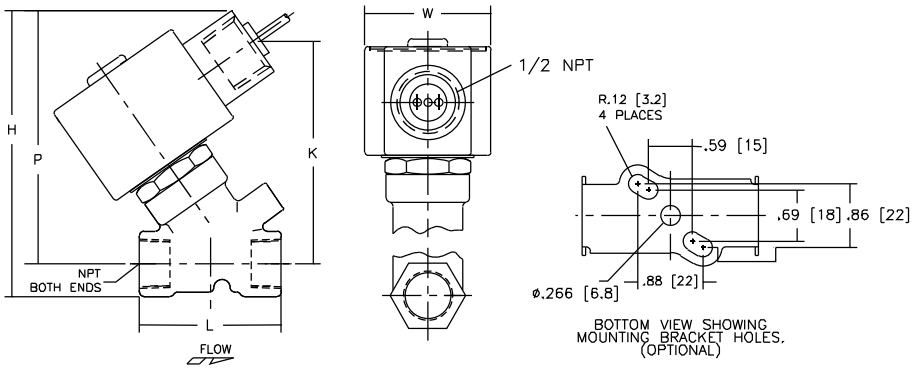

Constr. Ref. 3

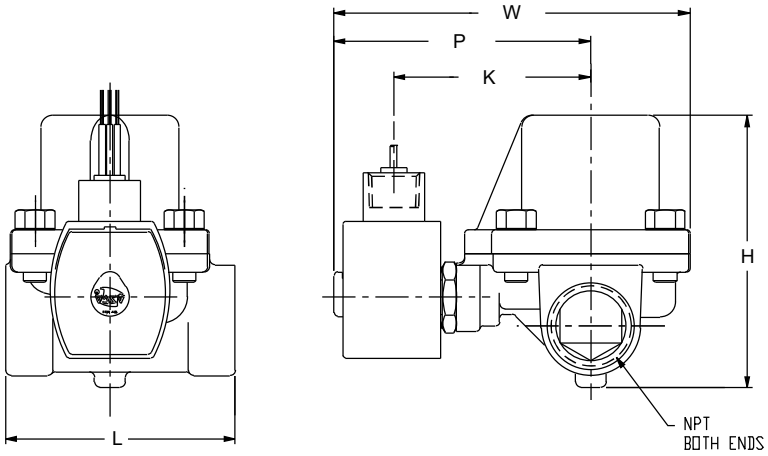

Constr. Refs. 5-9, 11, 20, 21, 23 , 25, 37,38

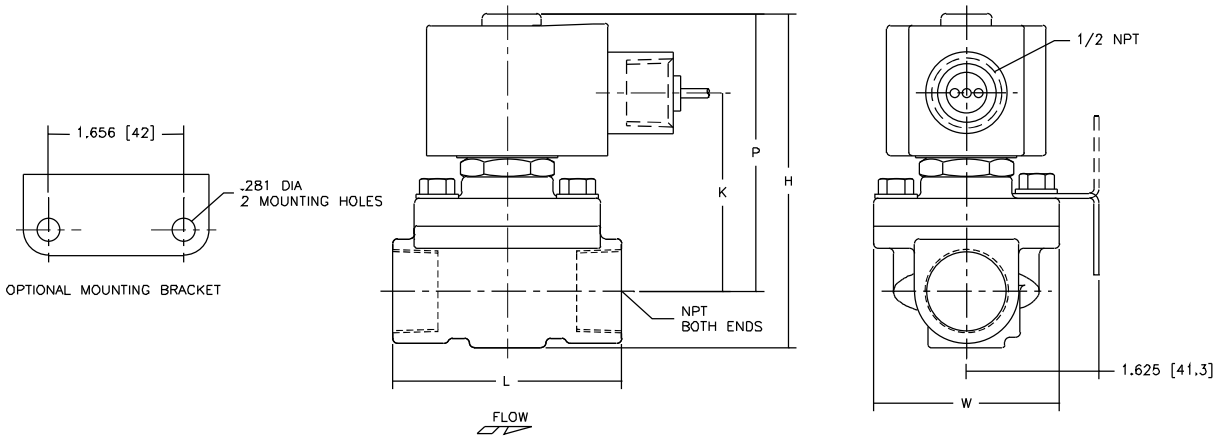

Dimensions: inches (mm)

30	**ins.**	8.22	X	5.06	5.47	4.87
	mm	209	X	129	139	124
31	**ins.**	5.25	X	3.75	4.44	3.25
	mm	133	X	95	113	83
32	**ins.**	5.69	X	3.66	4.69	3.25
	mm	145	X	93	119	83
33	**ins.**	6.06	X	4.38	4.94	3.91
	mm	154	X	111	125	99
34	**ins.**	6.91	X	3.75	6.09	3.25
	mm	176	X	95	155	83
35	**ins.**	7.34	X	3.66	6.34	3.25
	mm	186	X	93	161	83
36	**ins.**	7.66	X	4.38	6.56	3.91
	mm	1.95	X	111	167	99
37	**ins.**	4.61	2.75	2.81	3.89	2.39
	mm	117	70	71	99	61
38	**ins.**	4.61	2.75	2.81	3.89	2.39
	mm	117	70	71	99	61
39	**ins.**	5.42	2.31	2.75	4.86	3.80
	mm	138	59	70	123	97
40	**ins.**	5.20	3.29	2.81	4.50	2.28
	mm	132	83	71	114	58
41	**ins.**	5.13	3.10	3.75	4.32	3.25
	mm	130	79	95	110	83
42	**ins.**	6.43	4.40	3.93	5.62	3.25
	mm	163	112	100	143	83
43	**ins.**	5.57	3.35	3.66	4.57	3.25
	mm	142	85	93	116	83
44	**ins.**	5.90	3.57	4.38	4.79	3.91
	mm	150	91	111	122	99
45	**ins.**	5.26	3.17	3.75	4.38	3.84
	mm	134	81	95	111	98
46	**ins.**	4.95	3.10	3.84	4.31	2.75
	mm	126	79	98	110	70
47	**ins.**	6.43	3.59	3.75	4.81	3.52
	mm	163	91	95	122	90
48	**ins.**	6.43	3.59	3.66	4.81	3.73
	mm	163	91	93	122	95
49	**ins.**	6.91	3.75	4.38	4.96	4.40
	mm	176	95	111	126	112
50	**ins.**	8.13	4.15	5.06	5.37	4.87
	mm	207	105	129	136	124
51	**ins.**	8.13	4.15	5.50	5.37	5.18
	mm	207	105	140	136	132

IMPORTANT: Valves may be mounted in any position, except as noted in specifications table.

Constr. Refs. 10, 15, 24, 26-36

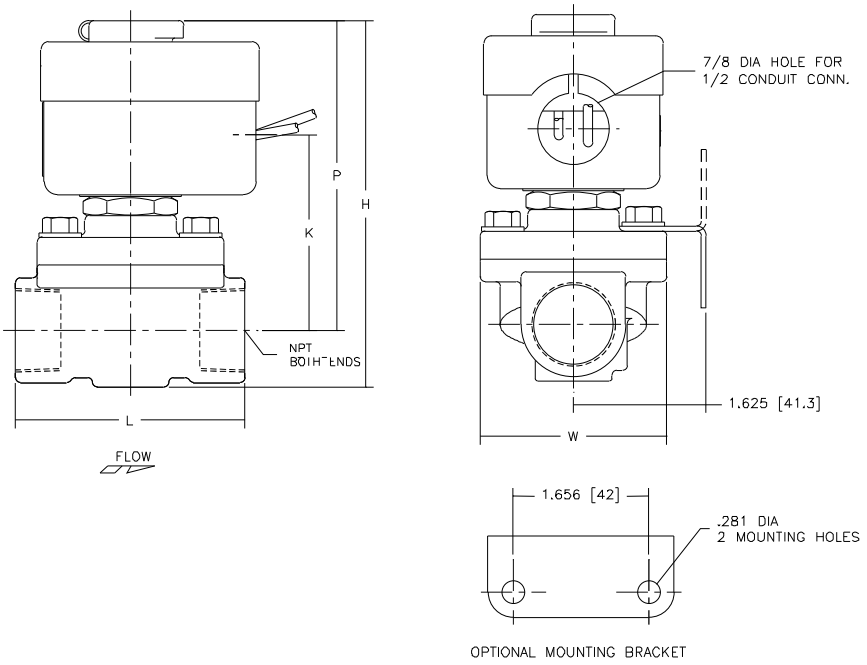

Constr. Refs. 12, 16, 18

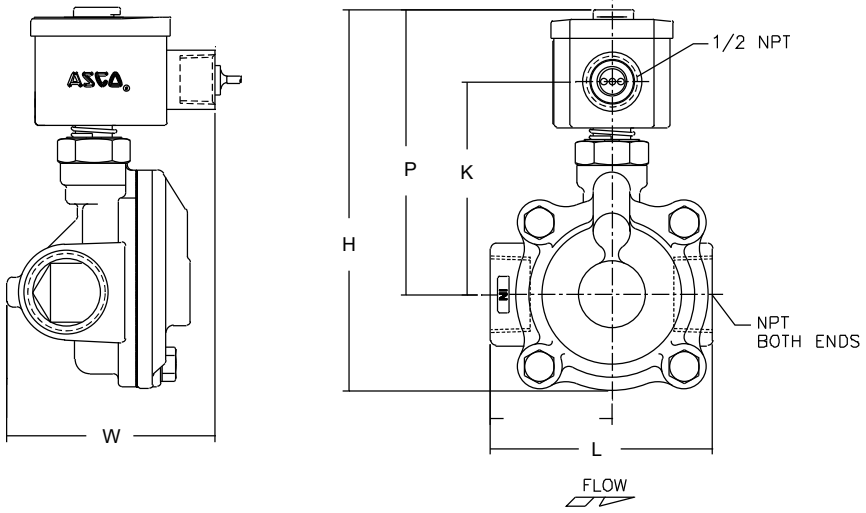

Note: Valve must be mounted with solenoid vertical and upright.

Dimensions: inches (mm)

Constr. Refs. 39

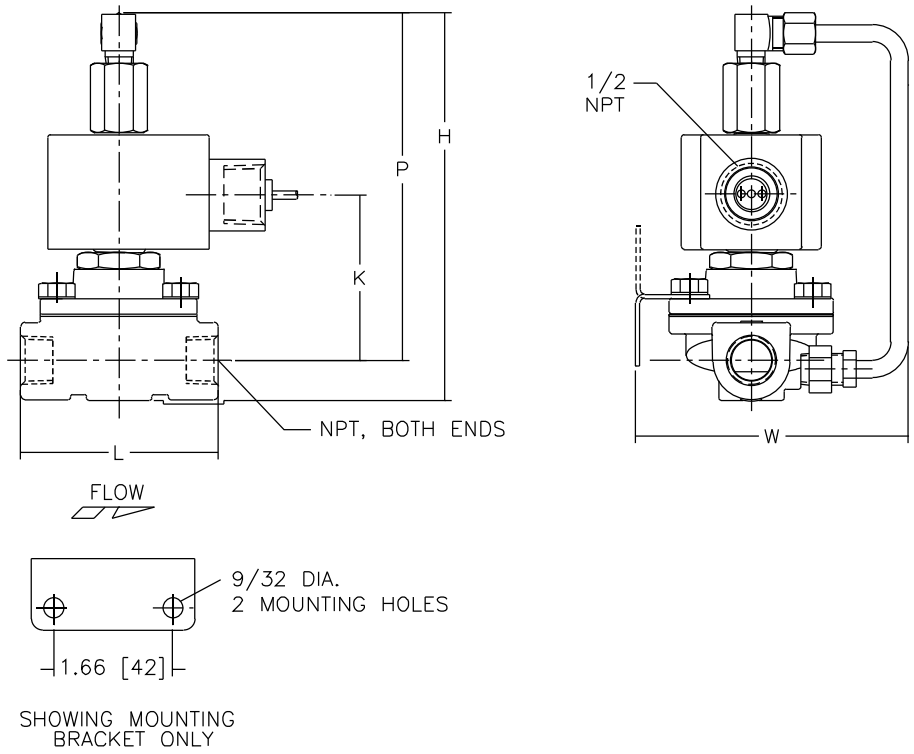

Constr. Refs. 40-51

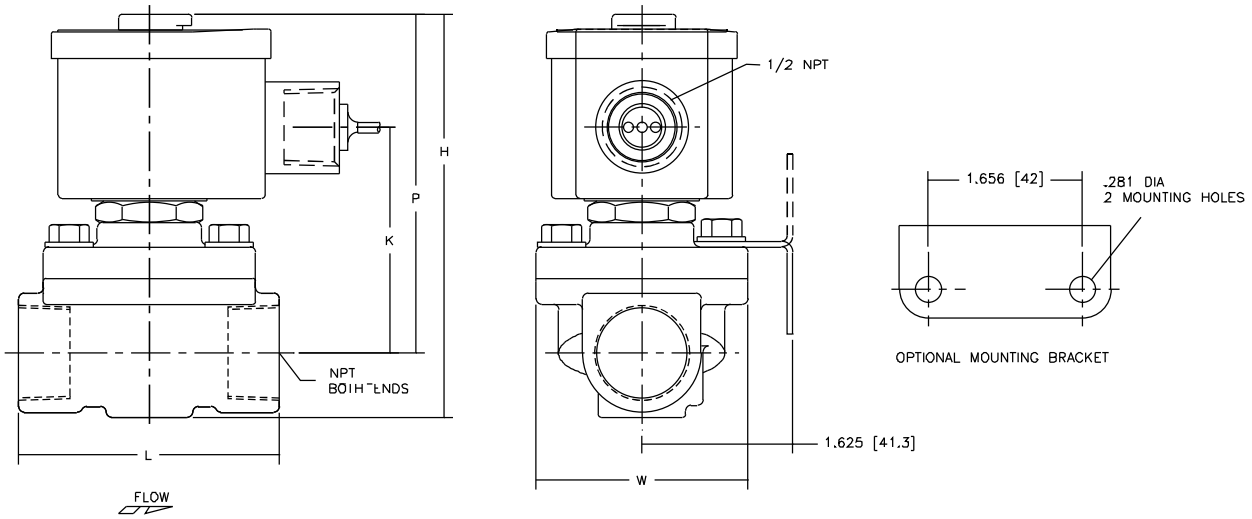

Conduit Outlet Boxes and Bodies: Malleable Iron or Aluminum; Explosionproof, Dust-Ignitionproof

UNILETS® for use with Threaded Metal Conduit.

Applications

- Meet a wide range of classified area requirements.
- Corrosion-resistant–ideal indoors or out.
- For pulling of wires.
- Connect conduit lengths and change direction of conduit.
- Provide access for maintenance.

Features: All Bodies and Boxes

- Malleable iron bodies have high tensile strength and ductility. Provides great resistance to corrosion, impact, and shock.
- Accurately tapped, tapered hub threads for tight, rigid joints and ground continuity.
- Furnished with covers.
- General purpose wiring.

Features: GR and GRF

❶GR offers ten hub arrangements.

❷GRF has integral mounting flange.

- Function as sealing fittings when used with sealing covers (see NEC for restrictions).
- Internally threaded body with externally threaded cover.
- Covers have pry notches for bar or wrench.
- Accommodate sealing, dome, hub and union hub covers, and canopies.
- Standard O-rings provide raintight fit. NEMA 3,4.
- Internal ground screw standard.
- Smooth, rounded integral bushing in each hub type box protects conductor insulation.

Features: GRH

❸Designed for use in Class I, Groups A, B, C, and D; Class II, Groups E, F, and G; and Class III.

- Internally threaded body with externally threaded covers.
- Standard O-rings provide raintight fit. NEMA 3,4.
- Internal ground screw standard.
- Smooth, rounded integral bushing in each hub type box protects conductor insulation.

Features: ELBD

❹Exclusive built-in pulling rollers in each end (2-1/2 thru 4" sizes) protect cable from damage and make cable pulling easier.

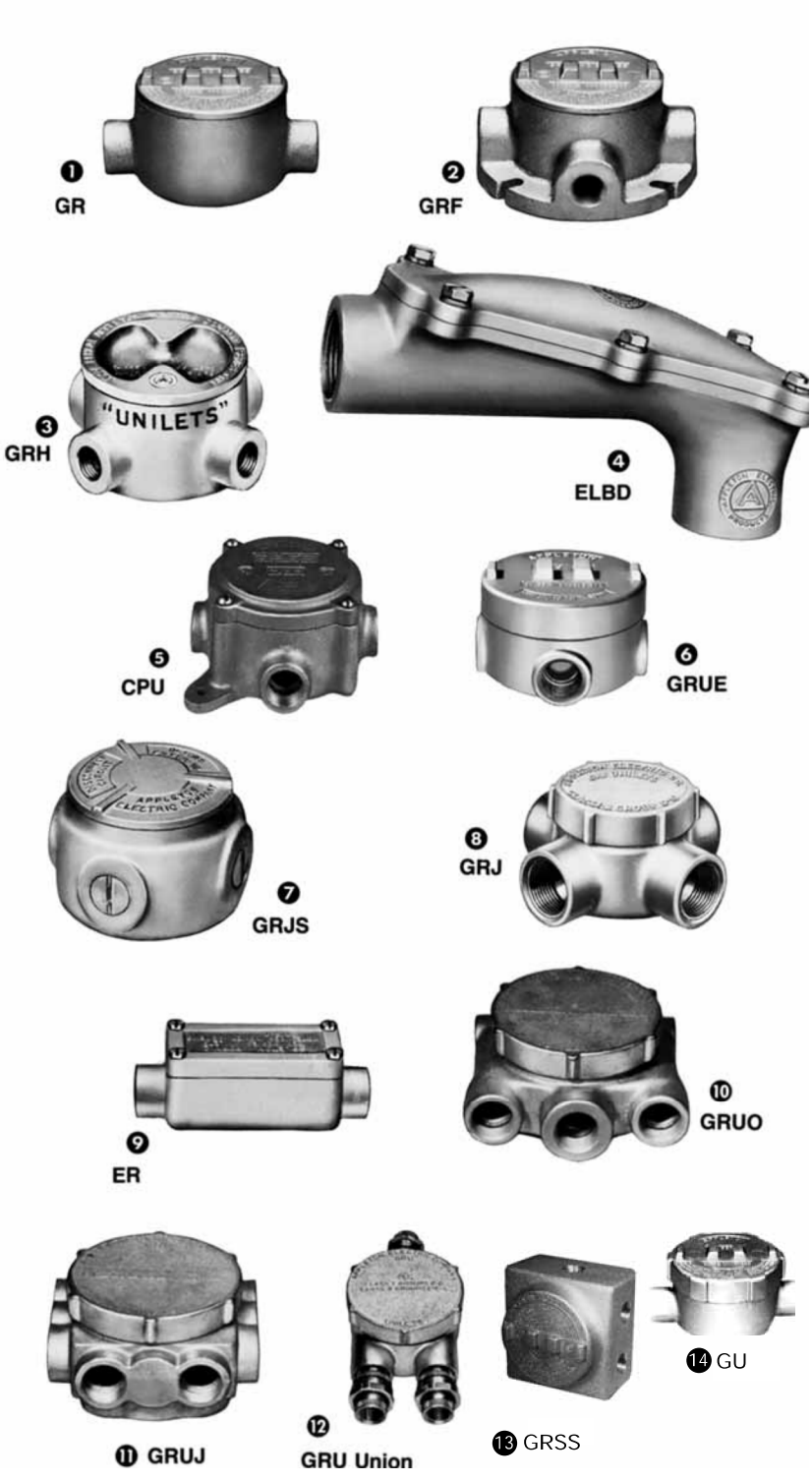

Conduit Outlet Boxes and Bodies: Malleable Iron or Aluminum; Explosionproof, Dust-Ignitionproof

UNILETS® for use with Threaded Metal Conduit.

- Excellent for use in wiring of motors, panelboards, circuit breakers, entrances to buildings, etc.
- Body and cover have ground mating surfaces to meet classified-location requirements.
- Smooth, rounded integral bushing in each hub type box protects conductor insulation.

Features: ELBY

- Serve as pulling fittings.
- Make 90° bends in conduit.
- Threaded cover opening permits easy access for pulling conductors thru hubs.
- Easily removable threaded cover.

Features: CPU

❺ Universal design with four threaded universal hubs and three close-up plugs.
- Serve as mounting outlets for lighting fixtures when used with hub cover.
- Wide, accurately ground explosion-proof mating surfaces.
- Smooth, rounded integral bushing in each hub type box protects conductor insulation.

Features: GRU and GRUE

❻ Universal design with five threaded universal hubs and three close-up plugs.
- Copper-free aluminum body and cover provide resistance to corrosive atmospheres.
- Function as sealing fittings when used with sealing covers (see NEC for restrictions).
- GRU has internally threaded body and externally threaded cover. GRUE has externally threaded body and internally threaded overlapping cover.
- Standard O-Rings provide raintight fit. NEMA 3,4.
- Covers have pry notches for bar or wrench.
- Smooth, rounded integral bushing in each hub type box protects conductor insulation.

Features: GRJS

❼ Universal design with five threaded openings and three close-up plugs.
- Compact round box for use where space is limited.
- Serve as mounting means for lighting fixtures when used with hub cover.
- Function as sealing fittings when used with sealing covers (see NEC for restrictions).
- Internally threaded body with externally threaded cover.
- Smooth, rounded integral bushing in each hub type box protects conductor insulation.

Features: GRJ

❽ Small, round conduit outlet boxes.
- Function as sealing fittings when used with sealing covers (see NEC for restrictions).
- Externally threaded body with internally threaded cover.
- Smooth, rounded integral bushing in each hub type box protects conductor insulation.

Features: ER

❾ Compact, rectangular conduit outlet boxes are ideal in classified locations where space is limited.
- Six different hub arrangements.
- Ground surface contact between body and cover assures a flame-tight joint.
- Smooth, rounded integral bushing in each hub type box protects conductor insulation.

Features: GRUO and GRUJ

- Threaded universal hubs for wiring flexibility.

❿ GRUO has eight hubs.

⓫ GRUJ offers up to eleven hubs.
- Ideally suited for use where space is limited, such as for gasoline pumps.
- Function as sealing fittings when used with sealing cover (see NEC for restrictions).
- Externally threaded body with internally threaded covers.
- Smooth, rounded integral bushing in each hub type box protects conductor insulation.

Features: GRU (Union Hubs)

⓬ Union hubs permit easy wiring.
- Function as sealing fittings when used with sealing covers (see NEC for restrictions).
- Externally threaded body with internally threaded cover.
- Smooth, rounded integral bushing in each hub type box protects conductor insulation.

Features: GRSS and GRSSA

⓭ Multiple hubs permit flexibility.
- Copper-free aluminum body and cover provide superior corrosion resistance.
- Internal ground screw standard.

Features: GU

⓮ Designed for Class I, Groups B,C,D; Class II, Groups E,F,G; and Class III.
- Externally threaded body with internally threaded cover.
- Smooth, rounded integral bushing in each hub type box protects conductor insulation.
- Internal ground screw standard.

Standard Materials

- GR, GRF, GRH, and GRJS: Malleable iron bodies with aluminum covers.
- Aluminum GR Series: Copper-free body and cover.
- GU, GRUO, GRUJ, GRU (Union), GRJ, CPU, ER, ELBD and ELBY: Malleable iron bodies and covers.
- GRU, GRUE, and GRSS: Aluminum copper-free bodies and covers.
- GRG O-Rings: Neoprene.

Standard Finishes

- Malleable iron bodies and covers (except ELBY) triple-coat—(1)zinc electroplate, (2) dichromate, and (3) epoxy powder coat.
- Aluminum bodies and covers: epoxy powder coat.
- ELBY malleable iron body and cover: zinc electroplate and clear chromate.

Compliances

- UL Standard 886.
- Federal Spec. W-C-586B.
- Appleton malleable iron products conform to ASTM A47-77, Grade 32510, which has the following properties: tensile strength, 50,000 psi; yield, 32,000 psi; and elongation, 10%.
- Appleton aluminum products are produced from a high strength copper-free (4/10 of 1% max.) alloy.
- Suitable for Class I, Div. 1 & 2, if installed in compliance with NEC 501-4(a)(b) and for Class II, Div. 1 & 2, if in compliance with NEC 502-4(a)(b).
- GR Series: CSA -LR25875-30.

Copyright 2005

Class I, Div. 1 and 2
Groups B*,C,D
Class II, Div. 1 and 2
Groups E,F,G
Class III
NEMA 3,4

GR Conduit Outlet Boxes: Explosionproof, Dust-Ignitionproof

UNILETS® for use with Threaded Metal Conduit.
Furnished with Internal Ground Screw and O-Ring.

	Hub Type	Conduit Size (Inches)	Cover Opening (Inches)	Cubic Inches	Form No.†	Catalog Number* Malleable Iron•	Aluminum•
	GRE	1/2	3.38	18	1	GRE50	GRE50-A
		3/4	3.38	18	1	GRE75	GRE75-A
		1	3.38	18	1	GRE100	GRE100-A
		1-1/4	3.94	31	2	GRE125	GRE125-A
		1-1/2	4.88	72	3	GRE150	GRE150-A
	GRC	1/2	3.38	18	1	GRC50	GRC50-A
		3/4	3.38	18	1	GRC75	GRC75-A
		1	3.38	18	1	GRC100	GRC100-A
		1-1/4	3.94	31	2	GRC125	GRC125-A
		1-1/2	4.88	72	3	GRC150	GRC150-A
		2	4.88	76	3	GRC200	GRC200-A
	GRL	1/2	3.38	18	1	GRL50	GRL50-A
		3/4	3.38	18	1	GRL75	GRL75-A
		1	3.38	18	1	GRL100	GRL100-A
		1-1/4	3.94	31	2	GRL125	GRL125-A
		1-1/2	4.88	72	3	GRL150	GRL150-A
		2	4.88	76	3	GRL200	GRL200-A
	GRLB	1/2	3.38	18	1	GRLB50	GRLB50-A
		3/4	3.38	18	1	GRLB75	GRLB75-A
		1	3.38	18	1	GRLB100	GRLB100-A
		1-1/4	3.94	31	2	GRLB125	GRLB125-A
		1-1/2	4.88	72	3	GRLB150	GRLB150-A
		2	4.88	76	3	GRLB200	GRLB200-A
	GRN	1/2	3.38	18	1	GRN50	GRN50-A
		3/4	3.38	18	1	GRN75	GRN75-A
		1	3.38	18	1	GRN100	GRN100-A
		1-1/4	3.94	31	2	GRN125	GRN125-A
		1-1/2	4.88	72	3	GRN150	GRN150-A
	GRT	1/2	3.38	18	1	GRT50	GRT50-A
		3/4	3.38	18	1	GRT75	GRT75-A
		1	3.38	18	1	GRT100	GRT100-A
		1-1/4	3.94	31	2	GRT125	GRT125-A
		1-1/2	4.88	72	3	GRT150	GRT150-A
		2	4.88	76	3	GRT200	GRT200-A
	GRX	1/2	3.38	18	1	GRX50	GRX50-A
		3/4	3.38	18	1	GRX75	GRX75-A
		1	3.38	18	1	GRX100	GRX100-A
		1-1/4	3.94	31	2	GRX125	GRX125-A
		1-1/2	4.88	72	3	GRX150	GRX150-A
		2	4.88	76	3	GRX200	GRX200-A

* In Group "B" atmospheres, all conduit runs must have a sealing fitting (not supplied) field installed adjacent to the enclosure.
• Supplied with Aluminum covers.

† Form number designates body and matching cover sizes. To order body without cover, add suffix -LC to catalog number. Other covers available—see GR Cover listing page and order separately.

See J-8 for optional Terminal Blocks.

Copyright 2005

Appleton®

800-621-1506
www.appletonelec.com

Class I, Div. 1 and 2
Groups B*,C,D
Class II, Div. 1 and 2
Groups E,F,G
Class III
NEMA 3,4

GR Conduit Outlet Boxes: Explosionproof, Dust-Ignitionproof

UNILETS® for use with Threaded Metal Conduit.
Furnished with Internal Ground Screw and O-Ring.



Hub Type	Conduit Size (Inches)	Cover Opening (Inches)	Form No.†	Catalog Number* Malleable Iron	Aluminum
GRCA	1/2	3.38	1	GRCA50	GRCA50-A
	3/4	3.38	1	GRCA75	GRCA75-A
GRLA	1/2	3.38	1	GRLA50	GRLA50-A
	3/4	3.38	1	GRLA75	GRLA75-A
GRTA	1/2	3.38	1	GRTA50	GRTA50-A
	3/4	3.38	1	GRTA75	GRTA75-A

* In Group "B" atmospheres, all conduit runs must have a sealing fitting (not supplied) field installed adjacent to the enclosure.
• Supplied with Aluminum covers.

† Form number designates body and matching cover sizes. To order body without cover, add suffix -LC to catalog number. Other covers available—see GR Cover listing page and order separately.

See J-8 for optional Terminal Blocks.

GR Form 1

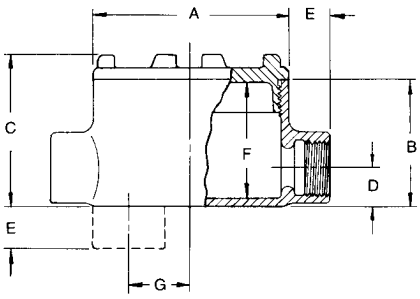

GR Series, Form 1

Hub Size (In.)	A	B	C	D	E	F	G
Dimensions in Inches							
1/2	3.75	2.44	2.88	.75	.81	2.25	1.25
3/4	3.75	2.44	2.88	.75	.81	2.25	1.25
1	3.75	2.44	2.88	.94	.94	2.25	1.06
Dimensions in Centimeters							
1/2	9.5	6.2	7.3	1.9	2.1	5.7	3.2
3/4	9.5	6.2	7.3	1.9	2.1	5.7	3.2
1	9.5	6.2	7.3	2.4	2.4	5.7	2.7

GR Forms 2 and 3

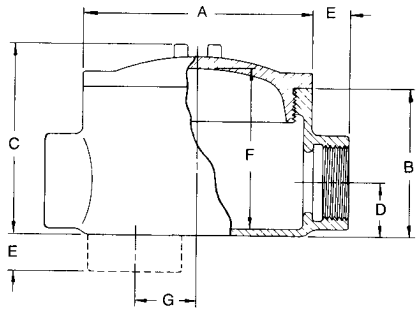

GR Series, Forms 2 and 3

Hub Size (In.)	A	B	C	D	E	F	G
Dimensions in Inches							
1-1/4	4.50	2.69	3.56	1.19	.88	2.75	1.13
1-1/2	5.75	3.75	4.81	1.38	.94	4.06	1.50
2	5.75	4.00	5.06	1.63	1.00	4.25	1.25
Dimensions in Centimeters							
1-1/4	11.4	6.8	9.1	3.0	2.2	7.0	2.9
1-1/2	14.6	9.5	12.2	3.5	2.4	10.3	3.8
2	14.6	10.2	12.9	4.1	2.5	10.8	3.2

For cubic inches information, see page J-19

Copyright 2005

Section 3.2

Screened Wastewater Equalization

Section 3.2.1

EQ Tank

REV	DESCRIPTION	DATE	BY	APP'D
0	FOR MFG ONLY	02/24/22	JG	JC

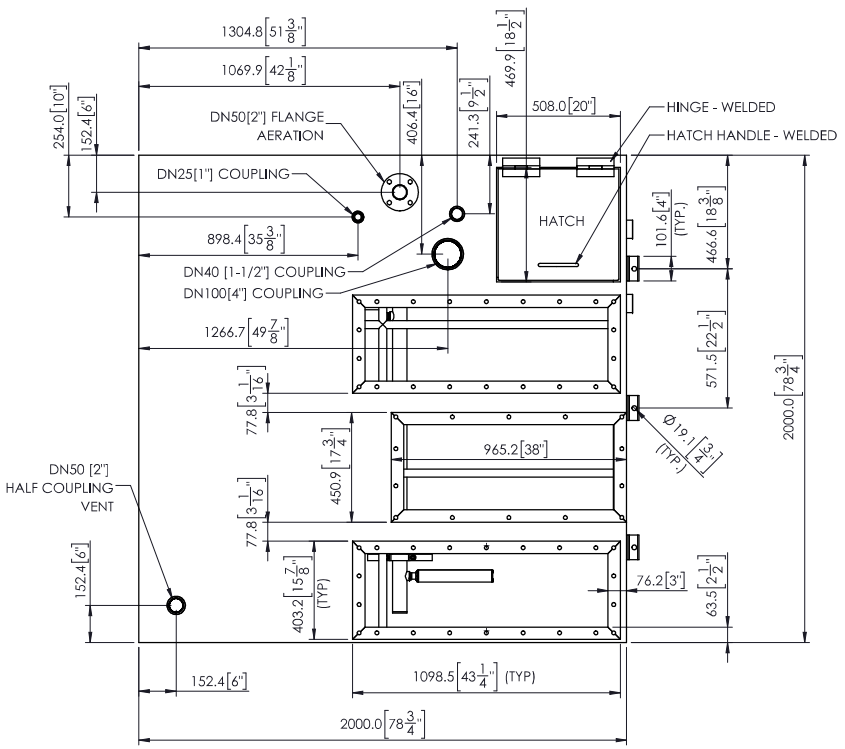

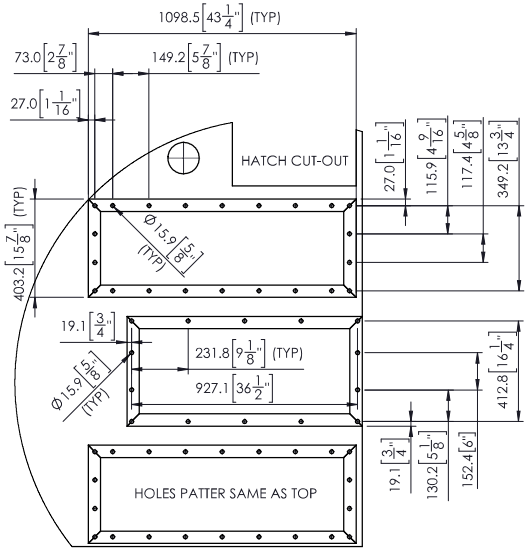

HOLES PATTERN DETAILS

MANUFACTURING NOTES:

1. QTY: 1 UNIT
2. MATERIAL: SS 316, 11 GAUGE FOR TANK WALL, 2" X 2" X 1/4" STRUCTURAL ANGLE
3. ALL DIMENSIONS ARE EDGE TO EDGE UNLESS OTHERWISE NOTED.
4. TOLERANCES: ANGULAR MACH. ±1°, BEND ± 1°, DECIMAL ±1.5mm OR ±1/16"
5. ALL WELDS MUST BE MIN. 3/16" CONTINUOUS MIG/TIG WELDS (FLARE BEVEL WELD WHERE NECESSARY)
6. ALL WELDS MUST BE UNIFORM AND AESTHETICALLY PLEASING, CONFORM TO CWB/ASME
7. REMOVE ALL SHARP EDGES, CLEAN AND GRINDING FLAT ALL WELDINGS WHEN APPLICABLE

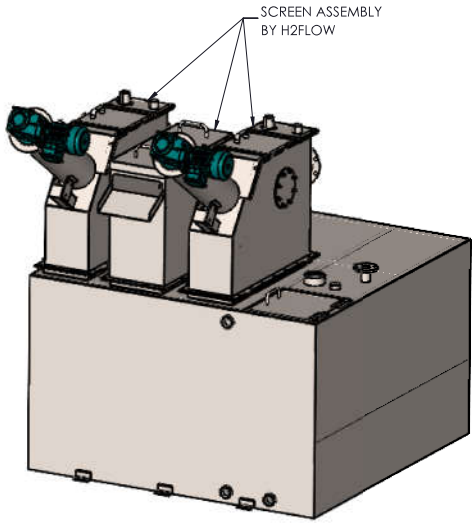

ISOMETRIC VIEW WITH SCREEN ASSEMBLY

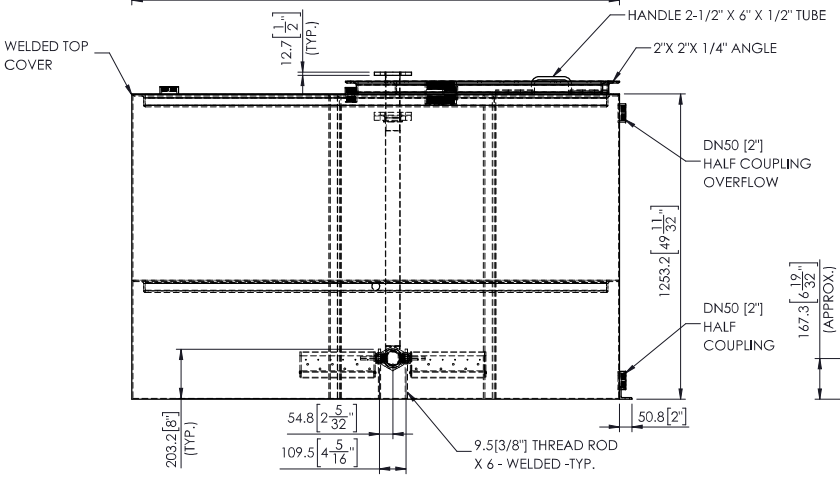

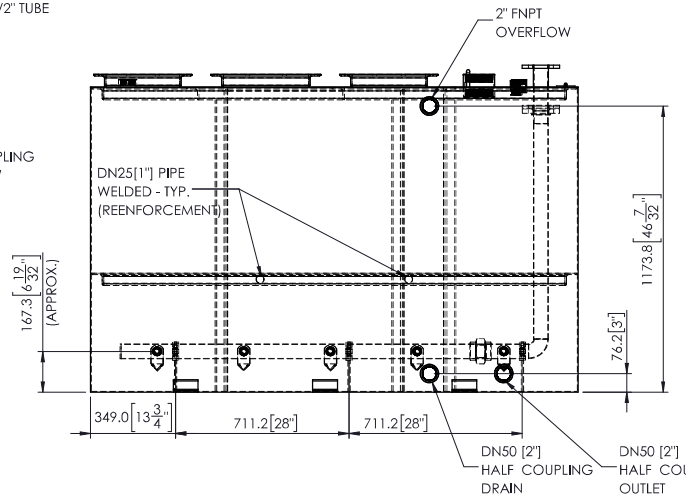

H2FLOW EQUIPMENT INC.
WATER AND WASTEWATER TREATMENT EQUIPMENT
580 OSTER LANE, CONCORD, ON L4K 2C1 CANADA
TEL: (905) 660-9775 FAX: (905) 660-9744
www.h2flow.com

THIS DRAWING IS THE PROPERTY OF H2FLOW EQUIPMENT INC. AND SHALL NOT BE COPIED OR TRANSFERRED WITHOUT THE WRITTEN CONSENT OF H2FLOW EQUIPMENT INC.

DRAWN BY: JG	DATE: 02/24/22	PROJECT NAME: EUREKA CONTAINERIZED MBBR NUNAVUT	TITLE: GENERAL ARRANGEMENT - EQ TANK
APP'D BY: JC	DATE: 02/24/22		DRAWING No.: Q-28520-31-01
SCALE: NTS		ALL DIMENSION ARE IN "mm" UNLESS OTHERWISE SPECIFIED	REV: 0
R10	VERSION 1	APRIL 07, 2021	SHEET 1 OF 3

REV	DESCRIPTION	DATE	BY	APP'D
0	FOR MFG ONLY	02/24/22	JG	JC

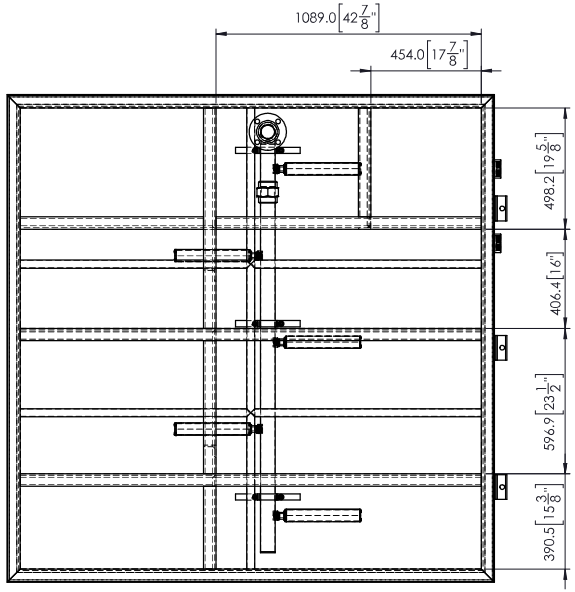

WELDED TOP COVER REMOVED FOR CLARITY

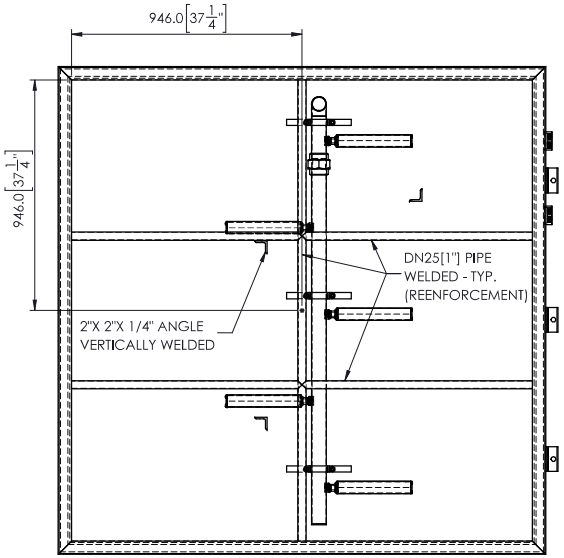

SECTION A-A
SCALE 1 : 20

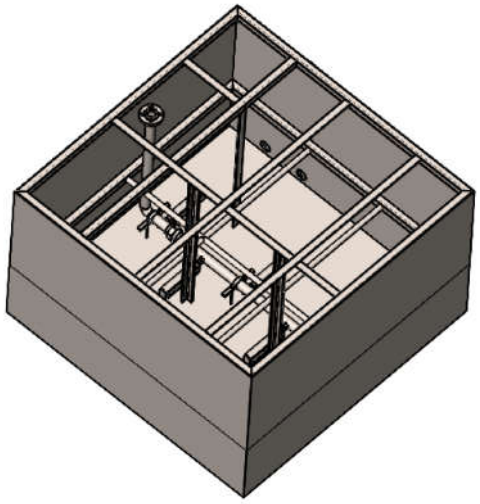

ISOMETRIC VIEW
(COVER REMOVED FOR CLARITY)

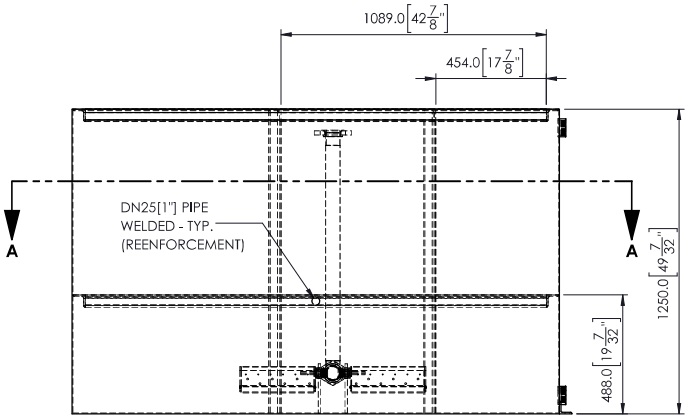

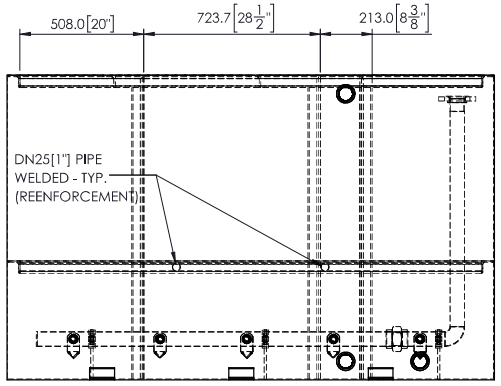

H2FLOW EQUIPMENT INC.

WATER AND WASTEWATER TREATMENT EQUIPMENT
580 OSTER LANE, CONCORD, ON L4K 2C1 CANADA
TEL: (905) 660-9775 FAX: (905) 660-9744
www.h2flow.com

THIS DRAWING IS THE PROPERTY OF H2FLOW EQUIPMENT INC. AND SHALL NOT BE COPIED OR TRANSFERRED WITHOUT THE WRITTEN CONSENT OF H2FLOW EQUIPMENT INC.

DRAWN BY: JG	DATE: 02/24/22	PROJECT NAME: EUREKA CONTAINERIZED MBBR NUNAVUT	TITLE: GENERAL ARRANGEMENT - EQ TANK
APP'D BY: JC	DATE: 02/24/22		DRAWING No.: Q-28520-31-01
SCALE: NTS		ALL DIMENSION ARE IN "mm" UNLESS OTHERWISE SPECIFIED	REV: 0
R10	VERSION 1	APRIL 07, 2021	SHEET 2 OF 3

REV	DESCRIPTION	DATE	BY	APP'D
0	FOR MFG ONLY	02/24/22	JG	JC

EQ TANK AERATION PIPING ASSEMBLY- QTY: 1 PC [SCALE 1:20]
MATERIAL: SS 316

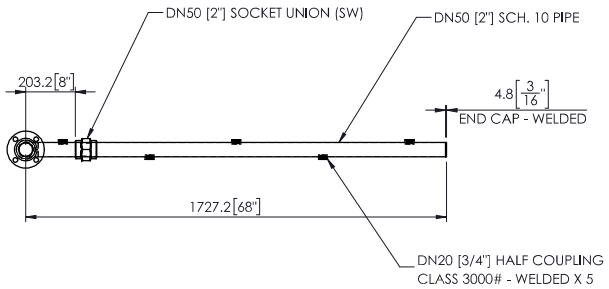

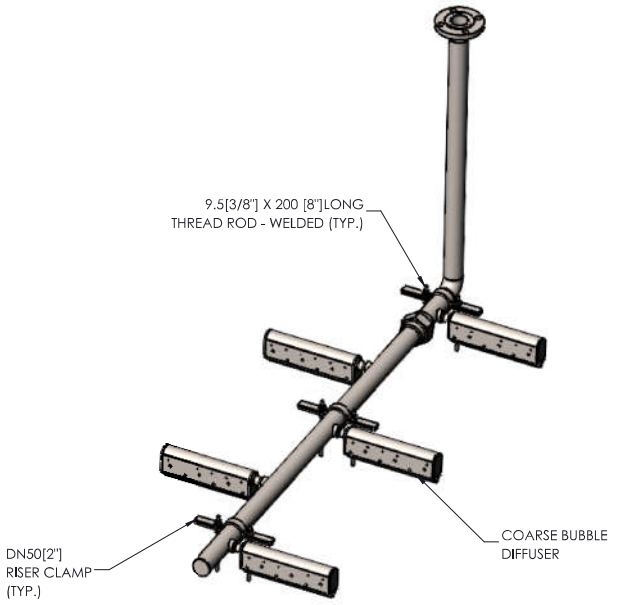

AERATION ASSEMBLY ISOMETRIC VIEW

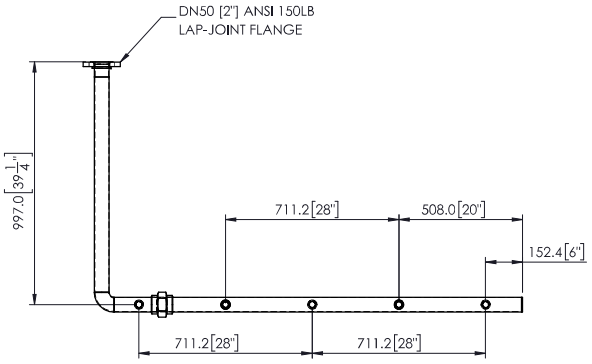

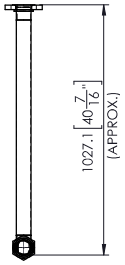

H2FLOW EQUIPMENT INC.

WATER AND WASTEWATER TREATMENT EQUIPMENT
580 OSTER LANE, CONCORD, ON L4K 2C1 CANADA
TEL: (905) 660-9775 FAX: (905) 660-9744
www.h2flow.com

THIS DRAWING IS THE PROPERTY OF H2FLOW EQUIPMENT INC. AND SHALL NOT BE COPIED OR TRANSFERRED WITHOUT THE WRITTEN CONSENT OF H2FLOW EQUIPMENT INC.

DRAWN BY: JG	DATE: 02/24/22	PROJECT NAME: EUREKA CONTAINERIZED MBBR NUNAVUT	TITLE: GENERAL ARRANGEMENT - EQ TANK
APP'D BY: JC	DATE: 02/24/22		DRAWING No.: Q-28520-31-01
SCALE: NTS		ALL DIMENSION ARE IN "mm" UNLESS OTHERWISE SPECIFIED	REV: 0
R10	VERSION 1	APRIL 07, 2021	SHEET 1 OF 3

Section 3.2.2

EQ Tank Level Sensor

Configuration summary

Mat. no.	Description Order code	Quantity	Unit
71082058	Waterpilot FMX21 FMX21-CE111HGF15A+PR	1	ST

010	Approval:	CE	CSA C/US IS Cl.I Div.1 Gr.A-D, Ex ia, zone 1
020	Output:	1	4-20mA
045	Probe Tube:	1	316L, d=22mm/0.87in
070	Sensor Range:	1H	1bar/100kPa/15psi gauge, 10mH2O/33ftH2O/400inH2O
080	Reference Accuracy:	G	Standard
090	Calibration; Unit:	F	Sensor range; psi
100	Probe Connection:	15	5 m ..... m cable, shortable, PE
190	Seal:	A	FKM
620	>>Accessory Enclosed:	PR	Cable-mounting-screw NPT1-1/2, 304

Technical Information
Waterpilot FMX21

Hydrostatic level measurement



Compact transmitter for level measurement

Application

The Waterpilot FMX21 is a pressure sensor for hydrostatic level measurement.

Endress+Hauser offers three different versions of the device:
- FMX21 with a stainless steel housing, external diameter of 22 mm (0.87 in): This version is excellently suited to drinking water applications and for use in bore holes and wells with small diameters
- FMX21 with a stainless steel housing, external diameter of 42 mm (1.65 in): Heavy-duty version and easy to clean thanks to flush-mounted process isolating diaphragm, ideally suited to wastewater and wastewater treatment plants
- FMX21 with plastic insulation, external diameter of 29 mm (1.14 in): Robust version for use in salt water and excellently suited to applications on ships (e.g. ballast water tanks)

Your benefits

- High resistance to overload
- High-precision, robust ceramic measuring cell with long-term stability
- Climate proofed sensor thanks to completely potted electronics and 2-filter pressure compensation system
- Simultaneous measurement of level and temperature with optionally integrated Pt100 temperature sensor
- Accuracy
  - Standard reference accuracy ±0.2 %
  - PLATINUM version ±0.1 %
- Automatic density compensation to increase accuracy
- Usage in drinking water: KTW, NSF, ACS
- Approvals: ATEX, FM, CSA
- Marine approvals: GL, ABS, BV, DNV
- Extensive range of accessories provides complete measuring point solutions

Endress+Hauser
People for Process Automation

Table of contents

About this document 4
Document function 4
Symbols used 4
Supplementary documentation 5
Terms and abbreviations 6
Turn down calculation 7

Function and system design 8
Device version 8
Measuring principle 9
Measuring system 10
Level measurement with absolute pressure probe and external pressure signal for FMX21 4 to 20 mA HART 12
Density compensation with the Pt100 temperature sensor for FMX21 4 to 20 mA HART 12
Communication protocol 13
System integration 13

Input 14
Measured variable 14
Measuring range 14
Input signal 15

Output 16
Output signal 16
Signal range 16
Maximum load for FMX21 4 to 20 mA Analog 16
Maximum load for FMX21 4 to 20 mA HART 16
Damping for FMX21 4 to 20 mA HART 17
Protocol-specific data for FMX21 4 to 20 mA HART 18

Power supply 19
Supply voltage 19
Power consumption 19
Current consumption 19
Connecting the device 19
Terminals in the terminal box 23
Probe cable 24
Cable resistance 24
Cable specifications 24
Residual ripple for FMX21 4 to 20 mA Analog 24
Residual ripple for FMX21 4 to 20 mA HART 24

Performance characteristics 25
Reference operating conditions 25
Reference accuracy 25
Resolution 25
Long-term stability 26
Influence of medium temperature 26
Warm-up period 26
Response time 26

Installation 27
Installation instructions 27
Additional installation instructions 27
Cable length 28
Technical data for cable 29
Cable marking 29
Cable shortening kit 30

Environment 31
Ambient temperature range 31
Storage temperature range 31
Degree of protection 31
Electromagnetic compatibility (EMC) 32
Overvoltage protection 32

Process 33
Medium temperature range 33
Medium temperature limit 33
Pressure specifications 34

Mechanical construction 35
Dimensions of the level probe 35
Dimensions of the mounting clamp 36
Dimensions of cable mounting screw 36
Dimensions of terminal box IP66, IP67 with filter 37
Dimensions of the TMT181 temperature head transmitter for FMX21 4 to 20 mA Analog 38
Dimensions of the TMT182 temperature head transmitter for FMX21 4 to 20 mA HART 38
Terminal box with integrated TMT181 temperature head transmitter for FMX21 4 to 20 mA Analog 39
Terminal box with integrated TMT182 temperature head transmitter for FMX21 4 to 20 mA HART 39
Additional weight 40
Testing adapter 40
RIA15 in the field housing 41
HART communication resistor 41
Weight 42
Materials 43

Operability 46
FMX21 4 to 20 mA Analog 46
FMX21 4 to 20 mA HART 46
RIA15 46

Certificates and approvals 47
CE mark 47
RCM-Tick marking 47
Ex approvals 47
EAC conformity 47
Drinking water approval 47
Marine approval 47
Other standards and guidelines 48
Calibration 48
Pressure Equipment Directive 2014/68/EU (PED) 48
Calibration unit 48
Service 49
Downloading the Declaration of Conformity 49

Ordering information 50
Scope of delivery 50
Configuration data sheet 50

Accessories **52**
Service-specific accessories 53

Supplementary documentation **54**
Field of Activities 54
Technical Information 54
Operating Instructions 54
Brief Operating Instructions 54
Safety Instructions (XA) 54
Drinking water approval 54

Registered trademarks **54**
GORE-TEX® 54
TEFLON® 54
HART® 54
FieldCare® 55
DeviceCare® 55
iTEMP® 55

About this document

Document function

The document contains all the technical data on the device and provides an overview of the accessories and other products that can be ordered for the device.

Symbols used

Safety symbols

Symbol	Meaning
DANGER	**DANGER!** This symbol alerts you to a dangerous situation. Failure to avoid this situation will result in serious or fatal injury.
WARNING	**WARNING!** This symbol alerts you to a dangerous situation. Failure to avoid this situation can result in serious or fatal injury.
CAUTION	**CAUTION!** This symbol alerts you to a dangerous situation. Failure to avoid this situation can result in minor or medium injury.
NOTICE	**NOTE!** This symbol contains information on procedures and other facts which do not result in personal injury.

Electrical symbols

Symbol	Meaning	Symbol	Meaning
⎓	Direct current	~	Alternating current
⎓ ~	Direct current and alternating current	⏚	**Ground connection** A grounded terminal which, as far as the operator is concerned, is grounded via a grounding system.
⏚	**Protective ground connection** A terminal which must be connected to ground prior to establishing any other connections.	⏚	**Equipotential connection** A connection that has to be connected to the plant grounding system: This may be a potential equalization line or a star grounding system depending on national or company codes of practice.

Symbols for certain types of information

Symbol	Meaning
✓	**Permitted** Procedures, processes or actions that are permitted.
✓✓	**Preferred** Procedures, processes or actions that are preferred.
✗	**Forbidden** Procedures, processes or actions that are forbidden.
i	**Tip** Indicates additional information.
	Reference to documentation
	Reference to page
	Reference to graphic
	Visual inspection

Symbols in graphics

Symbol	Meaning
1, 2, 3 ...	Item numbers
1., 2., 3. ...	Series of steps
A, B, C, ...	Views
A-A, B-B, C-C, ...	Sections

Supplementary documentation

The document types listed are available:
In the Download Area of the Endress+Hauser Internet site: www.endress.com → Download

Brief Operating Instructions (KA): getting the 1st measured value quickly

FMX21 4 to 20 mA Analog - KA01244P:

FMX21 4 to 20 mA HART - KA01189P:

The Brief Operating Instructions contain all the essential information from incoming acceptance to initial commissioning.

Operating Instructions (BA): your comprehensive reference

FMX21 4 to 20 mA Analog - BA01605P:

FMX21 4 to 20 mA HART - BA00380P:

RIA15 - BA01170K:

These Operating Instructions contain all the information that is required in various phases of the life cycle of the device: from product identification, incoming acceptance and storage, to mounting, connection, operation and commissioning through to troubleshooting, maintenance and disposal.

Safety Instructions (XA)

Depending on the approval, the following Safety Instructions (XA) are supplied with the device. They are an integral part of the Operating Instructions.

Directive	Type of protection	Category	Documentation	Option [1]
ATEX	Ex ia IIC	II 2 G	XA00454P	BD
ATEX	Ex nA IIC	II 3 G	XA00485P	BE
IECEx	Ex ia IIC	n/a	XA00455P	IC
CSA C/US	Ex ia IIC	n/a	ZD00232P (960008976)	CE
FM	AEx ia IIC	n/a	ZD00231P (960008975)	FE
NEPSI	Ex ia IIC	n/a	XA00456P	NA
INMETRO	Ex ia IIC	n/a	XA01066P	MA

1) Product Configurator order code for "Approval"

The nameplate indicates the Safety Instructions (XA) that are relevant to the device.

Terms and abbreviations

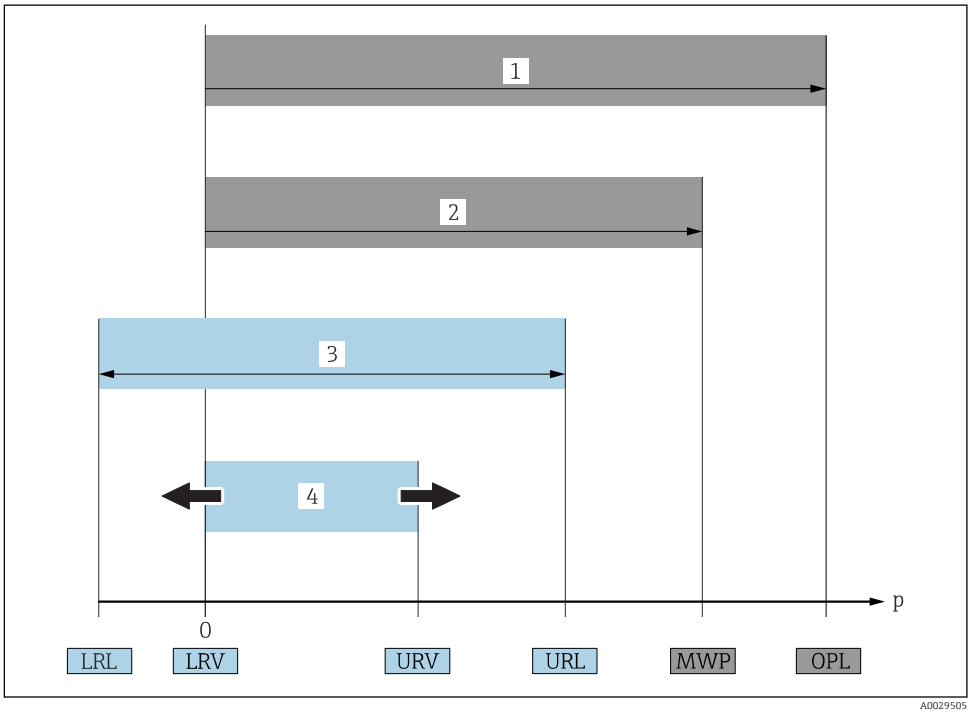

Item	Term/abbreviation	Explanation
1	OPL	The OPL (over pressure limit = sensor overload limit) for the measuring device depends on the lowest-rated element, with regard to pressure, of the selected components, i.e. the process connection has to be taken into consideration in addition to the measuring cell. Also observe pressure-temperature dependency. The OPL may only be applied for a limited period of time.
2	MWP	The MWP (maximum working pressure) for the sensors depends on the lowest-rated element, with regard to pressure, of the selected components, i.e. the process connection has to be taken into consideration in addition to the measuring cell. Also observe pressure-temperature dependency. The MWP may be applied at the device for an unlimited period. The MWP can also be found on the nameplate.
3	Maximum sensor measuring range	Span between LRL and URL This sensor measuring range is equivalent to the maximum calibratable/adjustable span.
4	Calibrated/adjusted span	Span between LRV and URV Factory setting: 0 to URL Other calibrated spans can be ordered as customized spans.
p	-	Pressure
-	LRL	Lower range limit
-	URL	Upper range limit
-	LRV	Lower range value
-	URV	Upper range value
-	TD (turn down)	Turn down Example - see the following section.
-	PE	Polyethylene
-	FEP	Fluorinated ethylene propylene
-	PUR	Polyurethane

Turn down calculation

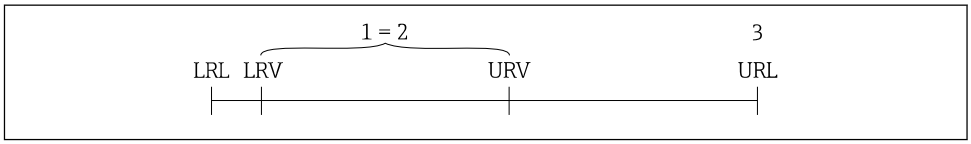

1 Calibrated/adjusted span
2 Zero point-based span (4 to 20 mA Analog: customer-specific span can only be set at the factory when ordered)
3 URL sensor

Example

- Sensor:10 bar (150 psi)
- Upper range value (URL) = 10 bar (150 psi)

Turn down (TD):

$$TD = \frac{URL}{|URV - LRV|}$$

$$TD = \frac{10\ \text{bar (150 psi)}}{|5\ \text{bar (75 psi)} - 0\ \text{bar (0 psi)}|} = 2$$

In this example, the TD is 2:1.
This span is based on the zero point.

- Calibrated/adjusted span: 0 to 5 bar (0 to 75 psi)
- Lower range value (LRV) = 0 bar (0 psi)
- Upper range value (URV) = 5 bar (75 psi)

Function and system design

Device version

Outer diameter	22 mm (0.87 in)	42 mm (1.65 in)	Max. 29 mm (1.14 in)
	 A0018640	 A0018641	 A0018642
Field of application	Hydrostatic level measurement in deep wells e.g. drinking water	Hydrostatic level measurement in wastewater	Hydrostatic level measurement in saltwater
	NOTICE **The Waterpilot is not suitable for use in biogas plants since the gases can diffuse through the elastomers (seals, cable).** ▶ For applications involving biogas, Endress+Hauser offers the Deltapilot level measuring device.		
Process connection	▪ Suspension clamp ▪ Cable mounting screw with G 1½" A or NPT 1½" thread		
Extension cable	PE, PUR, FEP → 🖹 45		
Seals	▪ FKM Viton ▪ EPDM [1]	FKM Viton	▪ FKM Viton ▪ EPDM [1]
Measuring ranges	▪ Relative pressure: 0 to 0.1 bar (0 to 1.5 psi) to 0 to 20 bar (0 to 300 psi) ▪ Absolute pressure: 0 to 2 bar (0 to 30 psi) to 0 to 20 bar (0 to 300 psi)		▪ Relative pressure: 0 to 0.1 bar (0 to 1.5 psi) to 0 to 4 bar (0 to 60 psi) ▪ Absolute pressure: 0 to 2 bar (0 to 30 psi) to 0 to 4 bar (0 to 60 psi)
	▪ Customer-specific measuring ranges; factory-calibrated. ▪ The following output units can be configured: %, mbar, bar, kPa, MPa, mmH_2O, mH_2O, inH_2O, ftH_2O, psi and numerous level units.		
Overload	to 40 bar (600 psi)		to 25 bar (375 psi)
Process temperature range	−10 to +70 °C (+14 to +158 °F)		0 to +50 °C (+32 to +122 °F)
Reference accuracy	▪ ±0.2 % of the set span ▪ Optional: ±0.1 % of set span (PLATINUM version)		
Supply voltage	10.5 to 35 V DC, Ex: 10.5 to 30 V DC		
Output	▪ 4 to 20 mA Analog ▪ 4 to 20 mA HART (can be inverted) with superimposed digital communication protocol HART 6.0, 2-wire		
Options	Drinking water approval	—	
	▪ Wide range of approvals, including ATEX, FM, CSA ▪ Numerous accessories ▪ Integrated Pt100 temperature sensor and TMT181 temperature head transmitter (4 to 20 mA) ▪ Integrated Pt100 temperature sensor and TMT182 temperature head transmitter (4 to 20 mA HART) ▪ Marine approval		
Specialties	▪ High-precision, robust ceramic measuring cell with long-term stability ▪ Automatic density compensation ▪ Customer-specific cable marking		

1) Recommended for drinking water applications, not suitable for use in hazardous areas.

Measuring principle

The ceramic measuring cell is a dry measuring cell i.e. the pressure acts directly on the robust, ceramic process isolating diaphragm of the Waterpilot FMX21. Changes in air pressure are guided via a pressure compensation tube through the extension cable to the rear of the ceramic process isolating diaphragm and are compensated for. A pressure-dependent change in capacitance, caused by the movement of the process isolating diaphragm, is measured at the electrodes of the ceramic carrier. The electronics unit then converts this to a signal that is proportional to the pressure and linear to the level.

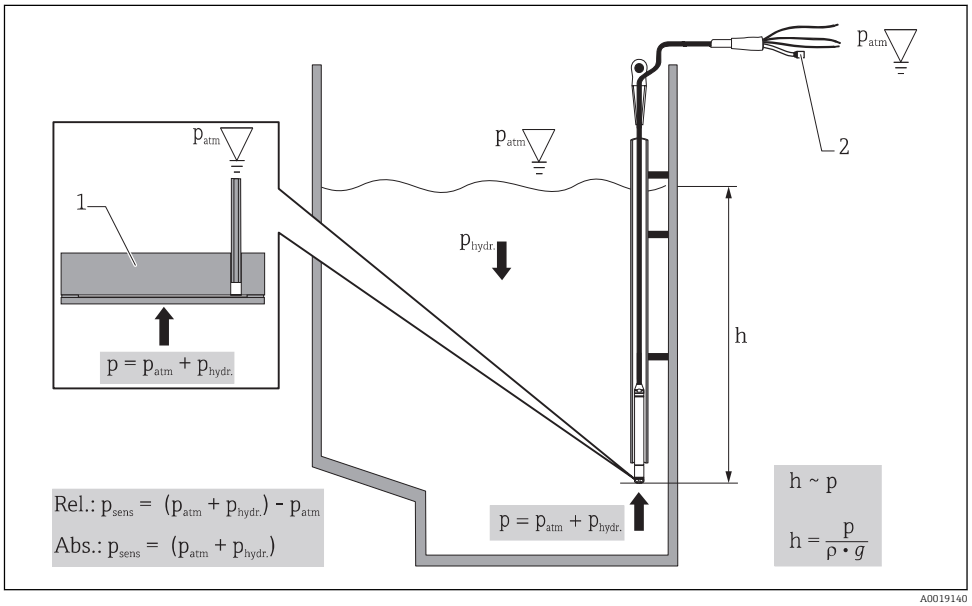

1 Ceramic measuring cell
2 Pressure compensation tube
h Height level
p Total pressure = atmospheric pressure + hydrostatic pressure
ρ Density of the medium
g Acceleration due to gravity
$P_{hydr.}$ Hydrostatic pressure
P_{atm} Atmospheric pressure
P_{sens} Pressure displayed on the sensor

Temperature measurement with optional Pt100 resistance thermometer [1)]

For simultaneous measurement of level and temperature, Endress+Hauser offers the Waterpilot FMX21 with an optional 4-wire Pt100 resistance thermometer → 52. The Pt100 is categorized as Accuracy Class B as per DIN EN 60751.

Temperature measurement with optional Pt100 and TMT181 temperature head transmitter for FMX21 4 to 20 mA Analog [1)]

To convert the temperature signal to an analog, scalable 4 to 20 mA output signal, Endress+Hauser also offers the TMT181 temperature head transmitter.

Ordering information: → 50; "Accessories" → 52. Technical Information TI00070R.

Temperature measurement with optional Pt100 and TMT182 temperature head transmitter for FMX21 4 to 20 mA HART [1)]

Endress+Hauser also offers the TMT182 temperature head transmitter with HART protocol for converting the temperature signal to an analog, scalable 4 to 20 mA output signal superimposed with HART 6.0. See also: "Density compensation with Pt100 temperature sensor" → 12

Ordering information: → 50; "Accessories" → 52. Technical Information TI00078R.

1) Not for use in hazardous areas.

Measuring system

Application examples

As standard, the complete measuring system consists of a Waterpilot FMX21 and a transmitter power supply unit with a supply voltage of 10.5 to 30 V DC (hazardous areas) or 10.5 to 35 V DC (non-hazardous areas).

Possible measuring point solutions with a transmitter and evaluation units from Endress+Hauser:

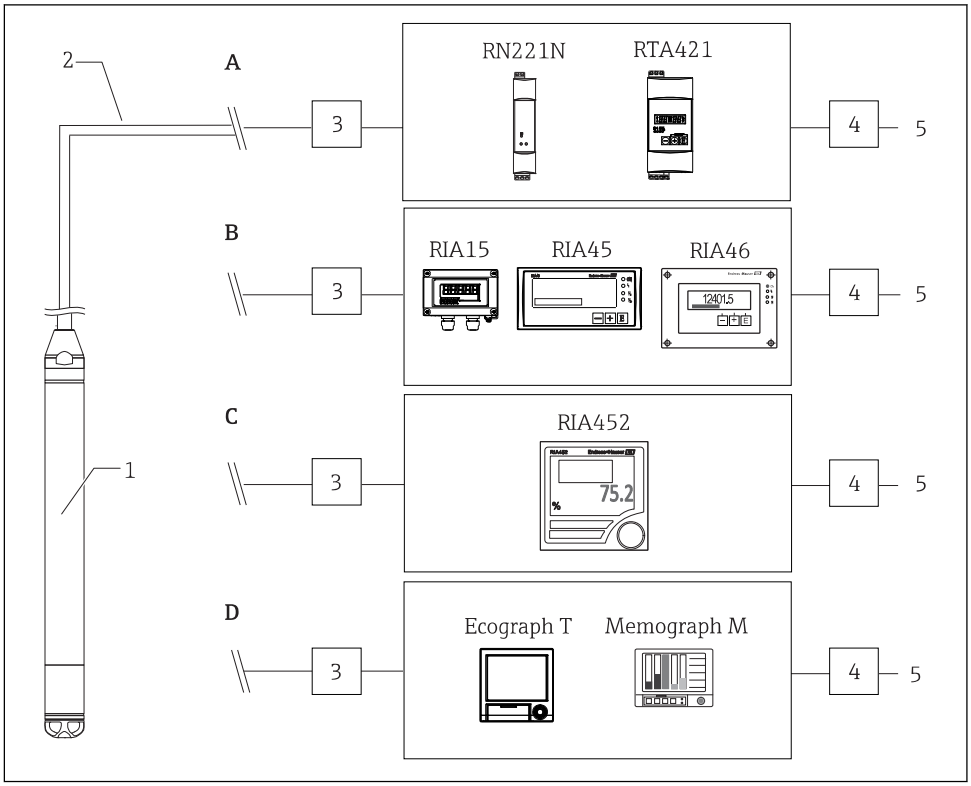

1 Waterpilot FMX21
2 4 to 20 mA or 4 to 20 mA HART
3+4 Overvoltage protection, e.g. HAW from Endress+Hauser (not for use in hazardous areas) HAW562; for DIN rail: HAW562/intrinsically safe HAW562Z. Selection in accordance with supply voltage.
5 Power supply

A: Easy and cost-effective measuring point solution: power supplied to the Waterpilot in hazardous and non-hazardous areas via the RN221N active barrier. Power supply and additional control of two appliances, such as pumps, via the RTA421 limit value switch with local display.

B: The RIA45 evaluation unit (for panel mounting) or the RIA46 evaluation unit (for field installation) offers power supply, local display and two switch outputs. If the RIA15 is used, the basic settings for the FMX21 HART can be made via the display module.

C: If several pumps are used, the pump service life can be prolonged by alternate switching. With alternating pump control, the pump which was out of service for the longest period of time is switched on. The RIA452 evaluation unit (for panel mounting) offers this option in addition to numerous other functions.

D: State-of-the-art recording technology with graphic display recorders from Endress+Hauser, such as Ecograph T, Memograph M for documentation, monitoring, visualization and archiving purposes.

Application examples with the Pt100

As standard, the complete measuring system consists of a Waterpilot FMX21 and a transmitter power supply unit with a supply voltage of 10.5 to 30 V DC (hazardous areas) or 10.5 to 35 V DC (non-hazardous areas).

Possible measuring point solutions with a transmitter and evaluation units from Endress+Hauser:

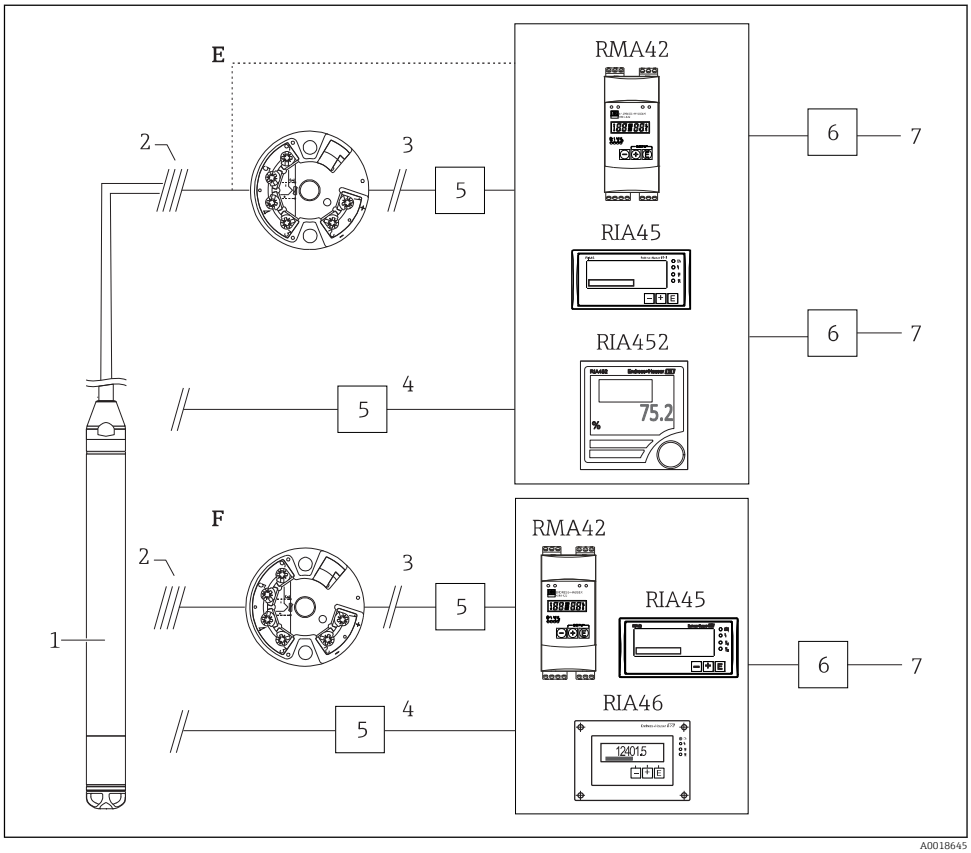

1 *Waterpilot FMX21*
2 *Connection for integrated Pt100 in the FMX21*
3 *Temperature for 4 to 20 mA or 4 to 20 mA HART*
4 *Level for 4 to 20 mA or 4 to 20 mA HART*
5 *Overvoltage protection, e.g. HAW from Endress+Hauser (not for use in hazardous areas) on the sensor side for field installation: HAW569; for DIN rail: HAW562/intrinsically safe HAW562Z. Selection in accordance with supply voltage.*
6 *Overvoltage protection, e.g. HAW from Endress+Hauser (not for use in hazardous areas) on the supply side for DIN rail: HAW561 (115/230 V) and HAW561K (24/48 V AC/DC). Selection in accordance with supply voltage.*
7 *Power supply*

E: If you wish to measure, display and evaluate the temperature as well as the level, e.g. to monitor the temperature in fresh water for the purpose of detecting temperature limits for germ formation, the options available to you include the following: The optionally available TMT182 temperature head transmitter can convert the Pt100 signal to a 4 to 20 mA signal or a 4 to 20 mA HART signal and transfer it to any commonly used evaluation unit. The RMA42, RIA45 and RIA452 evaluation units also offer a direct input for the Pt100 signal.

F: If you wish to record and evaluate the level and temperature measured value with one device, use the RMA42, RIA45 and RIA46 evaluation units with two inputs. It is even possible to mathematically link the input signals with this unit. These evaluation units are HART-compatible.

Level measurement with absolute pressure probe and external pressure signal for FMX21 4 to 20 mA HART

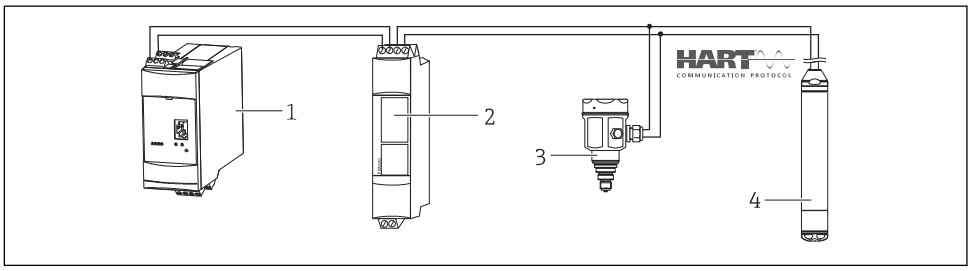

A0018757

1 Fieldgate FXA520
2 Multidrop Connector FXN520
3 Cerabar
4 Waterpilot FMX21 4 to 20 mA HART

It is advisable to use an absolute pressure probe for applications in which condensation can occur. For level measurement using an absolute pressure probe, the measured value is affected by fluctuations in the ambient pressure. To correct the resulting measured error, you can connect an external absolute pressure sensor (e.g. Cerabar) to the HART signal line, switch the Waterpilot to burst mode and operate the Cerabar in the "Electr. Delta P" mode. The external absolute pressure sensor then calculates the difference between the two pressure signals and can thus determine the level precisely. Only one level measured value can be corrected in this way.

If using intrinsically safe devices, the regulations for interconnecting intrinsically safe circuits as stipulated in IEC60079-14 (proof of intrinsic safety) must be observed.

Density compensation with the Pt100 temperature sensor for FMX21 4 to 20 mA HART

The Waterpilot FMX21 4 to 20 mA HART can correct measured errors that result from fluctuations in the density of the water caused by temperature. Users can choose from the following options:

Use the internally measured sensor temperature of the FMX21

The internally measured sensor temperature is calculated in the Waterpilot FMX21 4 to 20 mA HART for density compensation. The level signal is thus corrected according to the density characteristic line of water.

Use the optional internal temperature sensor for density compensation in a suitable HART master (e.g. PLC)

The Waterpilot FMX21 4 to 20 mA HART is optionally available with a Pt100 temperature sensor. To convert the Pt100 signal to a 4 to 20 mA HART signal, Endress+Hauser also offers the TMT182 temperature head transmitter.

The temperature and pressure signals are queried by a HART master (e.g. PLC), where a corrected level value can be generated using a stored linearization table or density function (of a chosen medium).

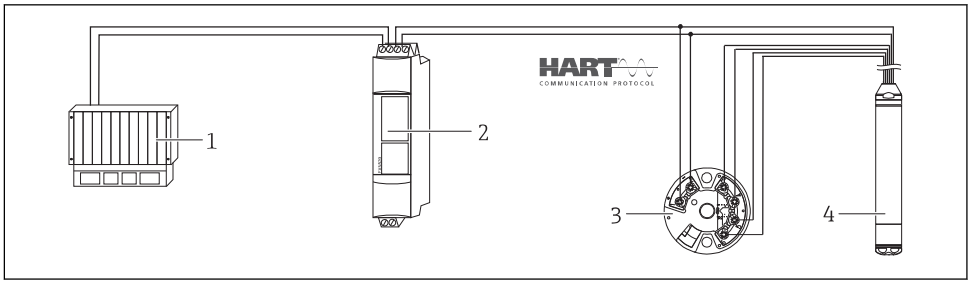

A0018763

1 HART master, e.g. PLC (programmable logic controller)
2 FXN520 Multidrop Connector
3 TMT182 temperature head transmitter
4 Waterpilot FMX21 4 to 20 mA HART

Use an external temperature signal, which is transmitted to the FMX21 4 to 20 mA HART via the HART burst mode

The Waterpilot FMX21 4 to 20 mA HART is optionally available with a Pt100 temperature sensor. With this option, the signal of the Pt100 is evaluated with a HART-compliant temperature transmitter (min. HART 5.0) that supports the BURST mode. The temperature signal can thus be transmitted to the FMX21 4 to 20 mA HART. The FMX21 4 to 20 mA HART uses this signal for density correction of the level signal.

The TMT182 temperature head transmitter is not suitable for this configuration.

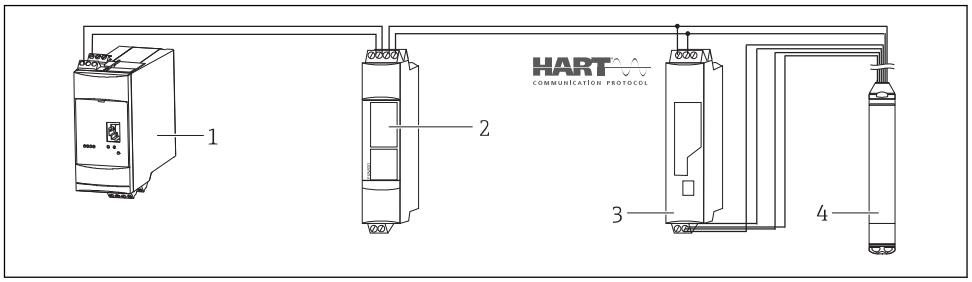

A0018764

1 Fieldgate FXA520
2 Multidrop Connector FXN520
3 HART-compatible temperature transmitter (e.g. TMT82)
4 Waterpilot FMX21 4 to 20 mA HART

Without additional compensation due to the anomaly of water, errors of up to 4% may occur at a temperature of 70 °C (158 °F), for example. With density compensation, this error can be decreased to 0.5 % in the entire temperature range from 0 to +70 °C (+32 to +158 °F).

More information can be found in the Technical Information:

- TI01010T: TMT82 temperature transmitter (4 to 20 mA HART)
- TI00369F: Fieldgate FXA520
- TI00400F: Multidrop Connector FXN520

Communication protocol

- 4 to 20 mA Analog
  Ordering information: Product Configurator order code for "Output", option "1"
- 4...20 mA HART
  Ordering information: Product Configurator order code for "Output", option "2"

System integration

The device can be given a tag name.

Ordering information: Product Configurator order code for "Identification", option "Z1"

Input

Measured variable

FMX21 + Pt100 (optional)

- Hydrostatic pressure of a liquid
- Pt100: Temperature

TMT181 temperature head transmitter (optional) for FMX21 4 to 20 mA Analog

Temperature

TMT182 temperature head transmitter (optional) for FMX21 4 to 20 mA HART

Temperature

Measuring range

- Customer-specific measuring ranges or calibration that has been preset in the factory
- Temperature measurement of −10 to +70 °C (+14 to +158 °F) with Pt100 (optional)

Relative pressure

Sensor measuring range [bar (psi)]	Lowest calibratable span [1] [bar (psi)]	Vacuum resistance [bar_{abs} (psi_{abs})]	Option [2]
0.1 (1.5)	0.01 (0.15)	0.3 (4.5)	1C
0.2 (3.0)	0.02 (0.3)	0.3 (4.5)	1D
0.4 (6.0)	0.04 (1.0)	0	1F
0.6 (9.0)	0.06 (1.0)	0	1G
1.0 (15.0)	0.1 (1.5)	0	1H
2.0 (30.0)	0.2 (3.0)	0	1K
4.0 (60.0)	0.4 (6.0)	0	1M
10.0 (150) [3]	1.0 (15)	0	1P
20.0 (300) [3]	2.0 (30)	0	1Q

1) Largest turn down that can be configured at the factory: 10:1, higher turn down can be configured on request or in the device (for FMX21 4 to 20 mA HART).
2) Product Configurator order code for "Sensor range"
3) These measuring ranges are not available for the special version with plastic insulation, external diameter of 29 mm (1.14 in).

Absolute pressure

Sensor measuring range [bar (psi)]	Lowest calibratable span [1] [bar (psi)]	Vacuum resistance [bar_{abs} (psi_{abs})]	Option [2]
2.0 (30.0)	0.2 (3.0)	0	2K
4.0 (60.0)	0.4 (6.0)	0	2M
10.0 (150) [3]	1.0 (15)	0	2P
20.0 (300) [3]	2.0 (30)	0	2Q

1) Largest turn down that can be configured at the factory: 10:1, higher turn down can be configured on request or in the device (for FMX21 4 to 20 mA HART).
2) Product Configurator order code for "Sensor range"
3) These measuring ranges are not available for the special version with plastic insulation, external diameter of 29 mm (1.14 in).

Input signal

FMX21 + Pt100 (optional)

- Change in capacitance
- Pt100: Change in resistance

TMT181 temperature head transmitter (optional) for FMX21 4 to 20 mA Analog

Pt100 resistance signal, 4 wire

TMT182 temperature head transmitter (optional) for FMX21 4 to 20 mA HART

Pt100 resistance signal, 4 wire

Output

Output signal

FMX21 + Pt100 (optional)

- 4 to 20 mA Analog, 2-wire for hydrostatic pressure measured value.
  Ordering information: Product Configurator order code for "Output", option "1"
- 4 to 20 mA HART with superimposed digital communication protocol HART 6.0, 2-wire for hydrostatic pressure measured value.
  Ordering information: Product Configurator order code for "Output", option "2"
  Options:
  – Max. alarm (factory setting 22mA): can be set from 21 to 23 mA
  – Hold measured value: last measured value is held
  – Min. alarm: 3.6 mA
- Pt100: temperature-dependent resistance value

TMT181 temperature head transmitter (optional) for FMX21 4 to 20 mA Analog

4 to 20 mA Analog for temperature measured value, 2-wire

TMT182 temperature head transmitter (optional) for FMX21 4 to 20 mA HART

4 to 20 mA HART with superimposed digital communication protocol HART 5.0 for temperature measured value, 2-wire

Signal range

3.8 mA to 20.5 mA

Maximum load for FMX21 4 to 20 mA Analog

The maximum load resistance depends on the supply voltage (U) and must be determined individually for each current loop, see formula and diagrams for FMX21 and temperature head transmitter. The total resistance resulting from the resistances of the connected devices, the connecting cable and, where applicable, the resistance of the extension cable may not exceed the load resistance value.

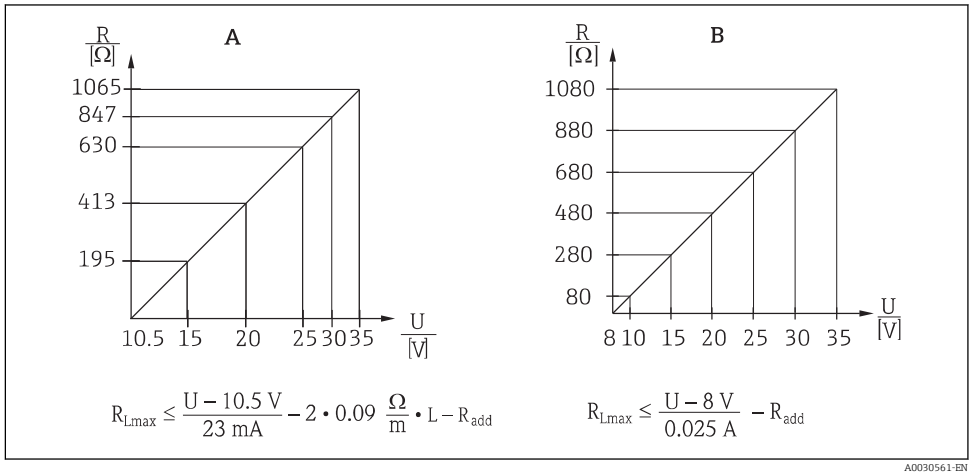

A FMX21 4 to 20 mA Analog load chart for estimating the load resistance. Additional resistances, such as the resistance of the extension cable, have to be subtracted from the value calculated as shown in the equation.

B Load diagram for TMT181 temperature head transmitter for estimating the load resistance. Additional resistances must be subtracted from the value calculated as shown in the equation

R_{Lmax} *Max. load resistance [Ω]*

R_{add} *Additional resistances such as resistance of evaluating device and/or display unit, cable resistance [Ω]*

U Supply voltage [V]

L Basic length of extension cable [m] (cable resistance per wire 0.09 Ω/m)

When using the measuring device in hazardous areas, installation must comply with the corresponding national standards and regulations and the Safety Instructions or Installation or Control Drawings (XA).

Maximum load for FMX21 4 to 20 mA HART

The maximum load resistance depends on the supply voltage (U) and must be determined individually for each current loop, see formula and diagrams for FMX21 and temperature head

transmitter. The total resistance resulting from the resistances of the connected devices, the connecting cable and, where applicable, the resistance of the extension cable may not exceed the load resistance value.

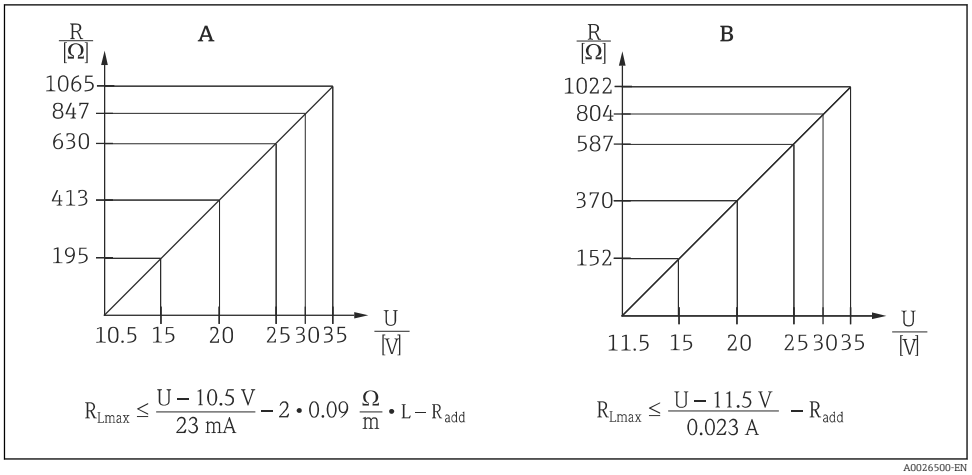

A FMX21 4 to 20 mA HART load chart for estimating the load resistance. Additional resistances, such as the resistance of the extension cable, have to be subtracted from the value calculated as shown in the equation.

B Load diagram for TMT182 temperature head transmitter for estimating the load resistance. Additional resistances must be subtracted from the value calculated as shown in the equation

R_{Lmax} Max. load resistance [Ω]

R_{add} Additional resistances such as resistance of evaluating device and/or display unit, cable resistance [Ω]

U Supply voltage [V]

L Basic length of extension cable [m] (cable resistance per wire 0.09 Ω/m)

- When using the measuring device in hazardous areas, installation must comply with the corresponding national standards and regulations and the Safety Instructions or Installation or Control Drawings (XA).
- When operating via a handheld terminal or via a PC with an operating program, a minimum communication resistance of 250 Ω must be taken into account.

Damping for FMX21 4 to 20 mA HART

- Via HART handheld device or PC with operating program: continuous from 0 to 999 s
- Factory setting: 2 s

Protocol-specific data for FMX21 4 to 20 mA HART

Manufacturer ID	17 (11 hex)
Device type code	25 (19 hex)
Device revision	01 (01 hex) - SW version 01.00.zz
HART specification	6
DD revision	01
Device description files (DTM, DD)	Information and files under: ▪ www.endress.com ▪ www.fieldcommgroup.org
HART load	Min. 250 Ω
HART device variables	The dynamic variables SV, TV and QV may be assigned to any device variable: **Standard process values for SV, TV (second and third device variable) are dependent on the measuring mode:** ▪ Pressure ▪ Level **Standard process value for QV (fourth device variable) is the sensor temperature:** Temperature **Measured values for PV (first device variable) are dependent on the measuring mode:** ▪ Pressure ▪ Level ▪ Tank content
Supported functions	▪ Burst mode ▪ Additional transmitter status ▪ Device locking ▪ Alternative measuring modes ▪ Catch variable ▪ Long tag

Power supply

WARNING

Electrical safety is compromised by an incorrect connection!

- When using the measuring device in a hazardous area, the relevant national standards and guidelines as well as the Safety Instructions (XAs) or installation or control drawings (ZDs) must be adhered to. All data relating to explosion protection can be found in separate documentation which is available on request. This documentation is supplied with the devices as standard → 5

Supply voltage

FMX21 + Pt100 (optional)

- 10.5 to 35 V (not hazardous areas)
- 10.5 to 30 V (hazardous areas)

TMT181 temperature head transmitter (optional) for FMX21 4 to 20 mA Analog

8 to 35 V DC

TMT182 temperature head transmitter (optional) for FMX21 4 to 20 mA HART

11.5 to 35 V DC

Power consumption

FMX21 + Pt100 (optional)

- ≤ 0.805 W at 35 V DC (non-hazardous area)
- ≤ 0.690 W at 30 V DC (hazardous area)

TMT181 temperature head transmitter (optional) for FMX21 4 to 20 mA Analog

≤ 0.875 W at 35 V DC

TMT182 temperature head transmitter (optional) for FMX21 4 to 20 mA HART

≤ 0.805 W at 35 V DC

Current consumption

FMX21 + Pt100 (optional)

Max. current consumption: ≤ 23 mA
Min. current consumption: ≥ 3.6 mA

TMT181 temperature head transmitter (optional) for FMX21 4 to 20 mA Analog

- Max. current consumption: ≤ 25 mA
- Min. current consumption: ≥ 3.5 mA

TMT182 temperature head transmitter (optional) for FMX21 4 to 20 mA HART

- Max. current consumption: ≤ 23 mA
- Min. current consumption: ≥ 3.5 mA

Connecting the device

- Waterpilot
  Reverse polarity protection is integrated in the Waterpilot FMX21 and the temperature head transmitter. Changing the polarities will not result in damage to the devices.
- The cable must end in a dry room or a suitable terminal box. The terminal box (IP66/IP67) with GORE-TEX® filter from Endress+Hauser is suitable for outdoor installation. The terminal box may be ordered as an accessory using the order code for the FMX21, Product Configurator order code for "Accessories enclosed", option "PS".

The electrical connection is established with the corresponding wires of the probe cable and with the optional use of the terminal box → 37 and a power supply (e.g. RN221N active barrier → 10).

Waterpilot with Pt100

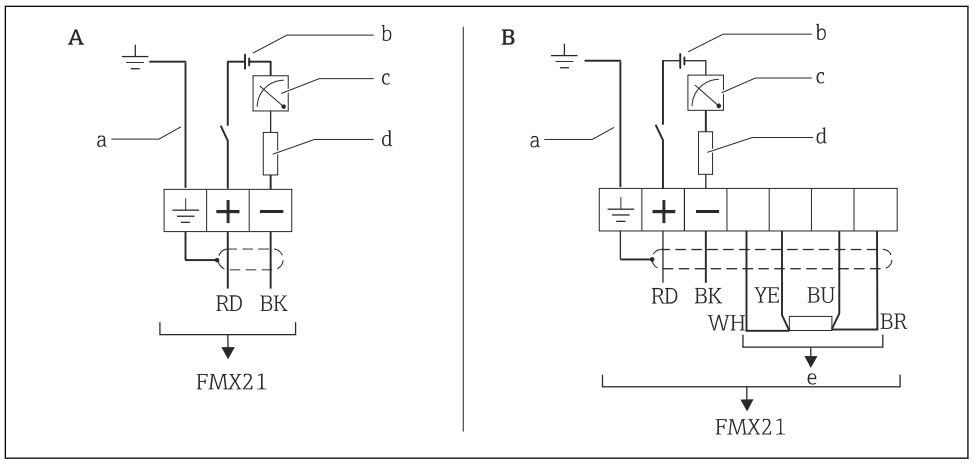

A Waterpilot FMX21
B Waterpilot FMX21 with Pt100 (not for use in hazardous areas); option "NB", Product Configurator order code for "Accessories"
a Not for the FMX21 with external diameter of 29 mm (1.14 in)
b 10.5 to 30 V DC (hazardous area), 10.5 to 35 V DC
c 4...20 mA
d Resistance (R_L)
e Pt100

Waterpilot with Pt100 and TMT181 temperature head transmitter for FMX21 4 to 20 mA Analog

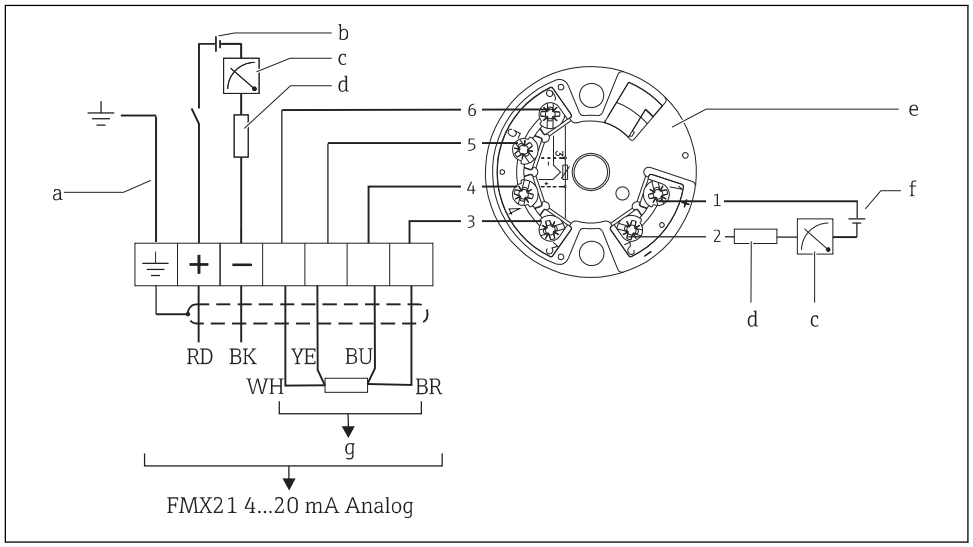

a Not for the FMX21 with external diameter of 29 mm (1.14 in)
b 10.5 to 35 V DC
c 4...20 mA
d Resistance (R_L)
e TMT181 temperature head transmitter (4 to 20 mA) (not for use in hazardous areas)
f 8 to 35 V DC
g Pt100
1...6 Pin assignment

Ordering information:

Pt100: Product Configurator order code for "Accessories mounted", option "NB"

TMT181: Product Configurator order code for "Accessories enclosed", option "PX"

Waterpilot with Pt100 and TMT182 temperature head transmitter for FMX21 4 to 20 mA HART

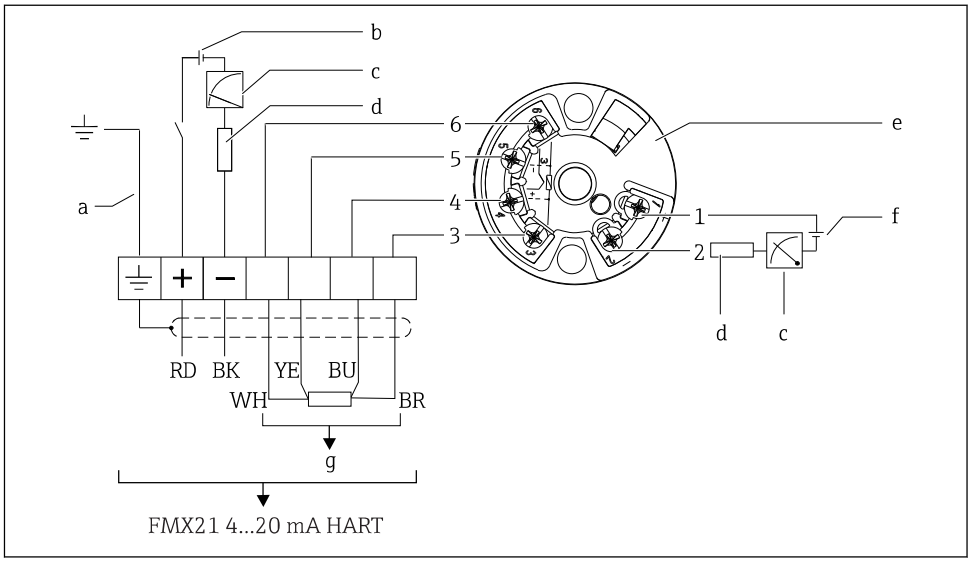

a Not for the FMX21 with external diameter of 29 mm (1.14 in)
b 10.5 to 35 V DC
c 4...20 mA
d Resistance (R_L)
e TMT182 temperature head transmitter (4 to 20 mA) (not for use in hazardous areas)
f 11.5 to 35 V DC
g Pt100
1...6 Pin assignment

Ordering information:

Pt100: Product Configurator order code for "Accessories mounted", option "NB"

TMT182: Product Configurator order code for "Accessories enclosed", option "PT"

Waterpilot FMX21 with RIA15

The RIA15 remote display can be ordered together with the device.

Product structure, feature 620 "Accessory enclosed":
- Option R4 "Remote display RIA15 non-hazardous area, field housing"
- Option R5 "Remote display RIA15 Ex= explosion protection approval, field housing"

Compensation of the atmospheric pressure must be ensured for the installation. A black, vented cable gland is supplied for this purpose.

The RIA15 process display unit is loop-powered and does not require any external power supply.

The voltage drop to be taken into account is:
- ≤1 V in the standard version with 4 to 20 mA communication
- ≤1.9 V with HART communication
- and an additional 2.9 V if display light is used

	Circuit diagram / Description
Waterpilot FMX21 connection, HART communication and RIA15 **without** backlight	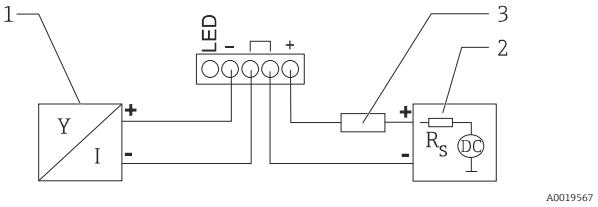 *1 Waterpilot FMX21 block diagram, HART with RIA15 process display unit without light* *1 Waterpilot FMX21* *2 Power supply* *3 HART resistance*
Waterpilot FMX21 connection, HART communication and RIA15 **with** backlight	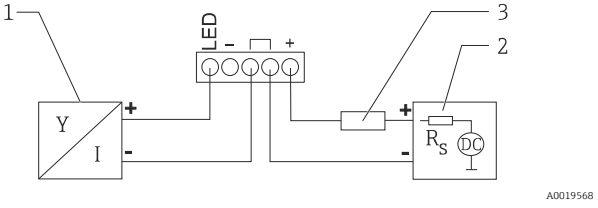 *2 Waterpilot FMX21 block diagram, HART with RIA15 process display unit with light* *1 Waterpilot FMX21* *2 Power supply* *3 HART resistance*

Waterpilot FMX21, RIA15 with installed HART communication resistor module

The HART communication module for installation in the RIA15 can be ordered together with the device.

Product structure, feature 620 "Accessory enclosed":
- Option R6 "HART communication resistor hazardous / non-hazardous area"
- The **voltage drop** to be taken into account is max. **7 V**

Compensation of the atmospheric pressure must be ensured for the installation. A black, vented cable gland is supplied for this purpose.

	Circuit diagram / Description
Waterpilot FMX21 connection and RIA15 **without** backlight	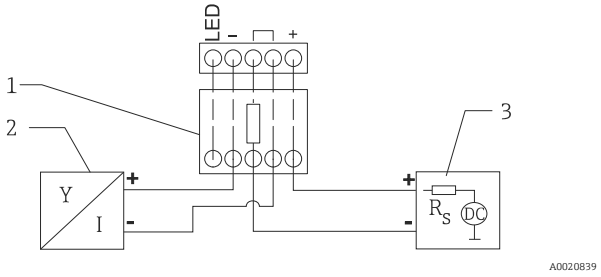 3 *Waterpilot FMX21 block diagram, RIA15 without light, HART communication resistor module* *1 HART communication resistor module* *2 Waterpilot FMX21* *3 Power supply*
Waterpilot FMX21 connection and RIA15 **with** backlight	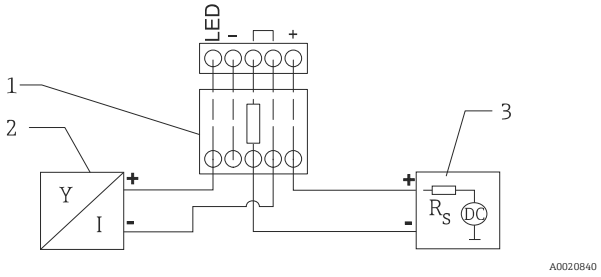 4 *Waterpilot FMX21 block diagram, RIA15 with light, HART communication resistor module* *1 HART communication resistor module* *2 Waterpilot FMX21* *3 Power supply*

Wire colors

RD = red, BK = black, WH = white, YE = yellow, BU = blue, BR = brown

Connection data

Connection classification as per IEC 61010-1:
- Overvoltage category 1
- Pollution level 1

Connection data in the hazardous area

See relevant XA.

Terminals in the terminal box

- Three terminals as standard in the terminal box (terminal box can optionally be ordered as an enclosed accessory → 52)
- 4-terminal strip can be ordered as an accessory, order number: 52008938 cable cross-section 0.08 to 2.5 mm^2 (28 to 14 AWG)

The 4-terminal strip is not designed for use in hazardous areas incl. CSA GP.

Probe cable

- Overall external diameter: 8 mm (0.31 in) ±0.25 mm (0.01 in)
- Pressure compensation tube with Teflon filter: External diameter of 2.5 mm (0.1 in), internal diameter of 1.5 mm (0.06 in)

Cross-section

- FMX21: 3 x 0.2 mm^2 (3 x 26 AWG) + pressure compensation tube with Teflon filter
- FMX21 with Pt100 (optional): 7 x 0.2 mm^2 (7 x 26 AWG) + pressure compensation tube with Teflon filter

Cable resistance

per wire: ≤ 0.09 Ω/m

Cable specifications

Endress+Hauser recommends using shielded, twisted-pair two-wire cables.

The probe cables are shielded for device versions with outer diameters of 22 mm (0.87 in) and 42 mm (1.65 in).

FMX21 + Pt100 (optional)

- Commercially available instrument cable
- Terminals, terminal box: 0.08 to 2.5 mm^2 (28 to 14 AWG)

TMT181 temperature head transmitter (optional) for FMX21 4 to 20 mA Analog

- Commercially available instrument cable
- Terminals, terminal box: 0.08 to 2.5 mm^2 (28 to 14 AWG)
- Transmitter connection: max. 1.75 mm^2 (15 AWG)

TMT182 temperature head transmitter (optional) for FMX21 4 to 20 mA HART

- Commercially available instrument cable
- Terminals, terminal box: 0.08 to 2.5 mm^2 (28 to 14 AWG)
- Transmitter connection: max. 1.75 mm^2 (15 AWG)

Residual ripple for FMX21 4 to 20 mA Analog

FMX21 + Pt100 (optional)

No impact on the 4 to 20 mA signal up to ±5 % residual ripple within the permitted voltage range.

TMT181 temperature head transmitter (optional)

$U_{ss} \geq 5$ V at $U \geq 13$ V, $f_{max.} = 1$ kHz

Residual ripple for FMX21 4 to 20 mA HART

FMX21 + Pt100 (optional)

No impact on the 4 to 20 mA signal up to ±5 % residual ripple within the permitted voltage range (according to HART Hardware Specification HCF_SPEC-54 (DIN IEC 60381-1)).

TMT182 temperature head transmitter (optional)

$U_{ss} \geq 3$ V at $U \geq 13$ V, $f_{max.} = 1$ kHz

Performance characteristics

Reference operating conditions

FMX21 + Pt100 (optional)

- As per IEC 60770
- Ambient temperature T_U = constant, in the range of +21 to +33 °C (+70 to +91 °F)
- Humidity φ = constant, in the range of 20 to 80 % rH
- Ambient pressure p_U = constant, in the range of 860 to 1060 mbar (12.47 to 15.37 psi)
- Position of measuring cell constant, vertical in the range of ±1°
- Input of LOW SENSOR TRIM and HIGH SENSOR TRIM for lower range value and upper range value (only for HART)
- Supply voltage constant: 21 V DC to 27 V DC
- Load with HART: 250 Ω
- Pt100: DIN EN 60770, T_U = +25 °C (+77 °F)

TMT181 temperature head transmitter (optional) for FMX21 4 to 20 mA Analog

Calibration temperature +23 °C (+73 °F) ±5 K

TMT182 temperature head transmitter (optional) for FMX21 4 to 20 mA HART

Calibration temperature +25 °C (+77 °F) ±5 K

Reference accuracy

FMX21 + Pt100 (optional)

The reference accuracy comprises the non-linearity after limit point configuration, hysteresis and non-reproducibility in accordance IEC 60770.

Standard version [2]:
Setting ±0.2 %
– to TD 5:1: < 0.2 % of set span
– from TD 5:1 to TD 20:1 ±(0.02 x TD+0.1)

Platinum version [3]:
- Setting ±0.1 % (optional)
  – to TD 5:1: < 0.1 % of set span
  – from TD 5:1 to TD 20:1 ±(0.02 x TD)
- Class B as per DIN EN 60751
  Pt100: max. ±1 K

TMT181 temperature head transmitter (optional) for FMX21 4 to 20 mA Analog

- ±0.2 K
- With Pt100: max. ±0.9 K

TMT182 temperature head transmitter (optional) for FMX21 4 to 20 mA HART

- ±0.2 K
- With Pt100: max. ±0.9 K

Resolution

Current output: 1 µA

Reading cycle

HART commands: on average 2 to 3 per second

2) Ordering information: Product Configurator order code for "Reference accuracy", option "G"
3) Ordering information: Product Configurator order code for "Reference accuracy", option "D"

Long-term stability

FMX21 + Pt100 (optional)

- ≤ 0.1 % of URL/year
- ≤ 0.25 % of URL/5 years

TMT181 temperature head transmitter (optional) for FMX21 4 to 20 mA Analog

≤ 0.1 K per year

TMT182 temperature head transmitter (optional) for FMX21 4 to 20 mA HART

≤ 0.1 K per year

Influence of medium temperature

- Thermal change in the zero output and the output span:
  0 to +30 °C (+32 to +86 °F): < (0.15 + 0.15 x TD)% of set span
  −10 to +70 °C (+14 to +158 °F): < (0.4 + 0.4 x TD)% of set span
- Temperature coefficient (T_K) of the zero output and the output span
  −10 to +70 °C (+14 to +158 °F): 0.1 % / 10 K of URL

Warm-up period

FMX21 + Pt100 (optional)

- FMX21: < 6 s
- Pt100: 300 s

TMT181 temperature head transmitter (optional) for FMX21 4 to 20 mA Analog

4 s

TMT182 temperature head transmitter (optional) for FMX21 4 to 20 mA HART

4 s

Response time

FMX21 + Pt100 (optional)

- FMX21: 400 ms (T90 time), 500 ms (T99 time)
- Pt100: 160 s (T90 time), 300 s (T99 time)

Installation

Installation instructions

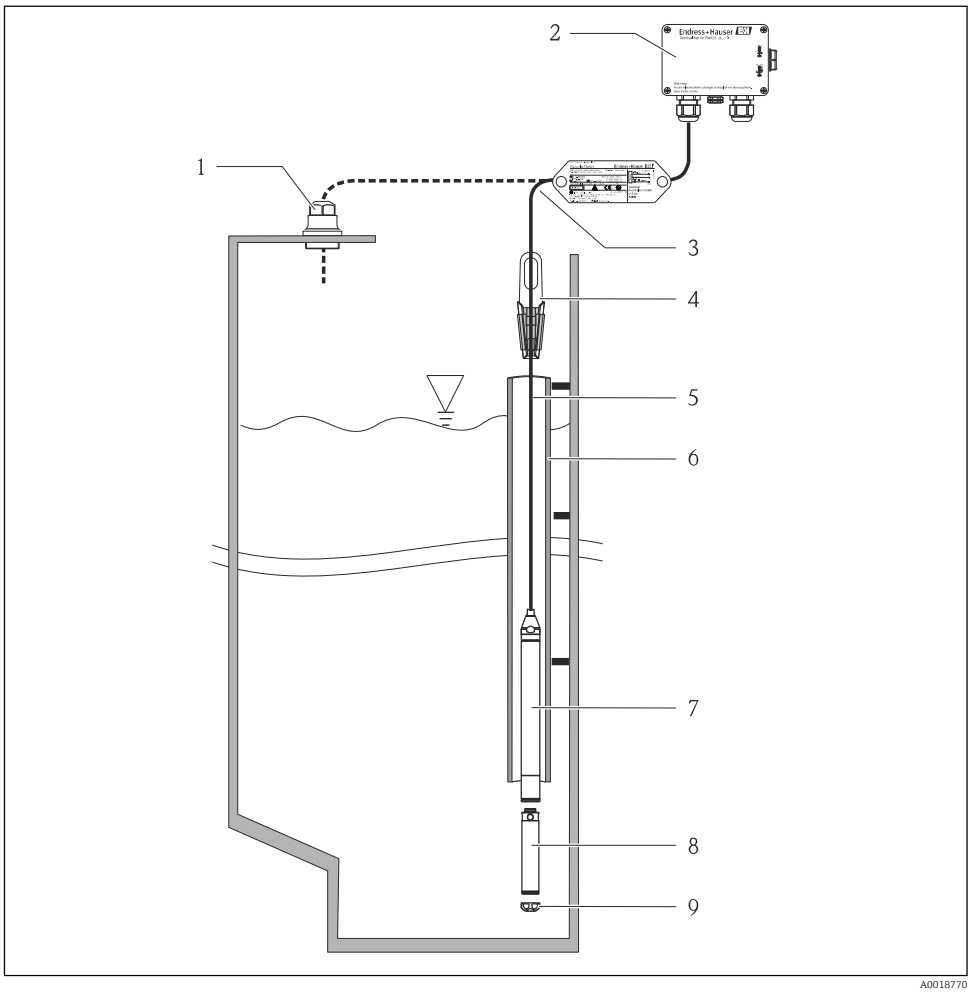

1 *Cable mounting screw can be ordered via the order code or as an accessory → 52*
2 *Terminal box can be ordered via the order code or as an accessory → 52*
3 *Bending radius of extension cable > 120 mm (4.72 in)*
4 *Mounting clamp can be ordered via the order code or as an accessory → 52*
5 *Extension cable, cable length → 28*
6 *Guide tube*
7 *Waterpilot FMX21*
8 *Additional weight can be ordered as an accessory for the FMX21 with external diameter of 22 mm (0.87 in) and 29 mm (1.14 in)→ 52*
9 *Protection cap*

Additional installation instructions

- Sideways movement of the level probe can result in measuring errors. For this reason, install the probe at a point free from flow and turbulence, or use a guide tube. The internal diameter of the guide tube should be at least 1 mm (0.04 in) greater than the external diameter of the selected FMX21.
- To avoid mechanical damage to the measuring cell, the device is equipped with a protection cap.
- The cable must end in a dry room or a suitable terminal box. The terminal box from Endress +Hauser provides humidity and climatic protection and is suitable for installation outdoors → 52.
- Cable length tolerance: < 5 m (16 ft): ±17.5 mm (0.69 in); > 5 m (16 ft): ±0.2 %
- If the cable is shortened, the filter at the pressure compensation tube must be reattached. Endress +Hauser offers a cable shortening kit for this purpose → 52 (documentation SD00552P/00/A6).

- Endress+Hauser recommends using twisted, shielded cable.
- In shipbuilding applications, measures are required to restrict the spread of fire along cable looms.
- The length of the extension cable depends on the intended level zero point. The height of the protection cap must be taken into consideration when designing the layout of the measuring point. The level zero point (E) corresponds to the position of the process isolating diaphragm. Level zero point = E; tip of probe = L (see the following diagram).
  For dimensions, see "Mechanical construction" section.

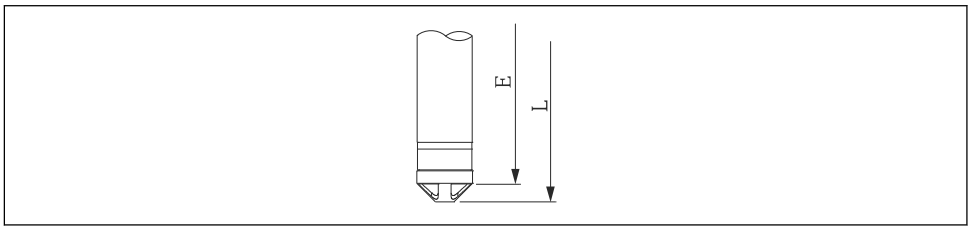

A0026013

Cable length

- Pay attention to the "Load"
- Cable lengths available for order
  - Customer-specific in meters or feet
  - Limited cable length when performing installation with freely suspended device with cable mounting screw or mounting clamp, as well as for Ex approval: max. 300 m (984 ft).

When using the measuring device in hazardous areas, installation must comply with the corresponding national standards and regulations and the Safety Instructions or Installation or Control Drawings.

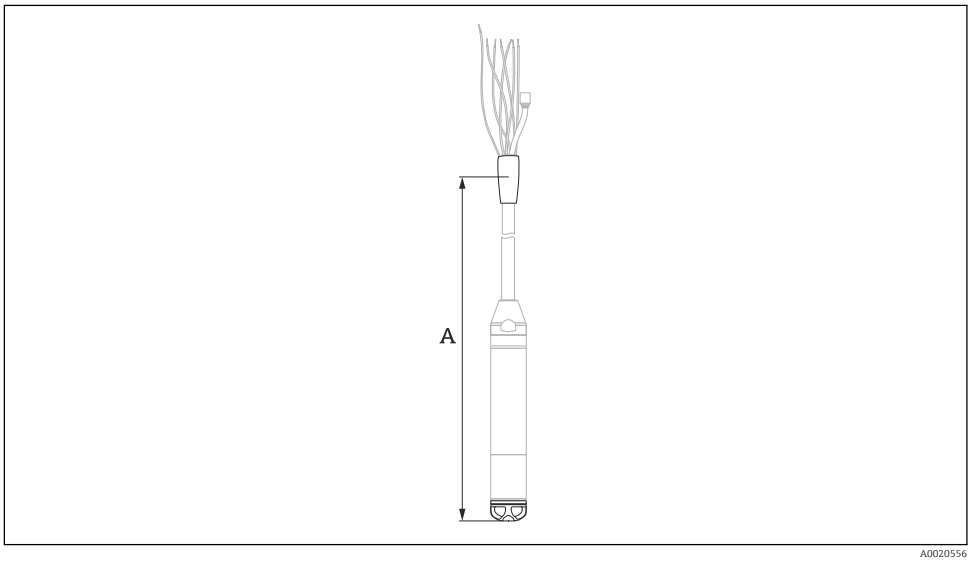

A0020556

A Length of extension cable

Cable	Option [1]
10 m cable, can be shortened, PE	10
20 m cable, can be shortened, PE	11
..... m cable, can be shortened, PE	15
30 ft cable, can be shortened, PE	20
60 ft cable, can be shortened, PE	21
..... ft cable, can be shortened, PE	25
10 m cable, can be shortened, FEP	30
20 m cable, can be shortened, FEP	31

Cable	Option [1]
..... m cable, can be shortened, FEP	35
30 ft cable, can be shortened, FEP	40
60 ft cable, can be shortened, FEP	41
..... ft cable, can be shortened, FEP	45
10 m cable, can be shortened, PUR	50
20 m cable, can be shortened, PUR	51
..... m cable, can be shortened, PUR	55
30 ft cable, can be shortened, PUR	60
60 ft cable, can be shortened, PUR	61
..... ft cable, can be shortened, PUR	65

1) Ordering information: Product Configurator order code for "Probe connection"

Technical data for cable

- Minimum bending radius: 120 mm (4.72 in)
- Tensile strength: max. 950 N (213.56 lbf)
- Cable extraction force (= tensile force required to extract the cable from the probe):
  - PE, FEP: typically ≥ 400 N (89.92 lbf), PUR: typically ≥ 150 N (33.72 lbf)
  - when used in hazardous area: ≥ 100 N (73.75 lbf)
- UV-resistant (UV = ultraviolet)
- PE: For use in drinking water

Cable marking

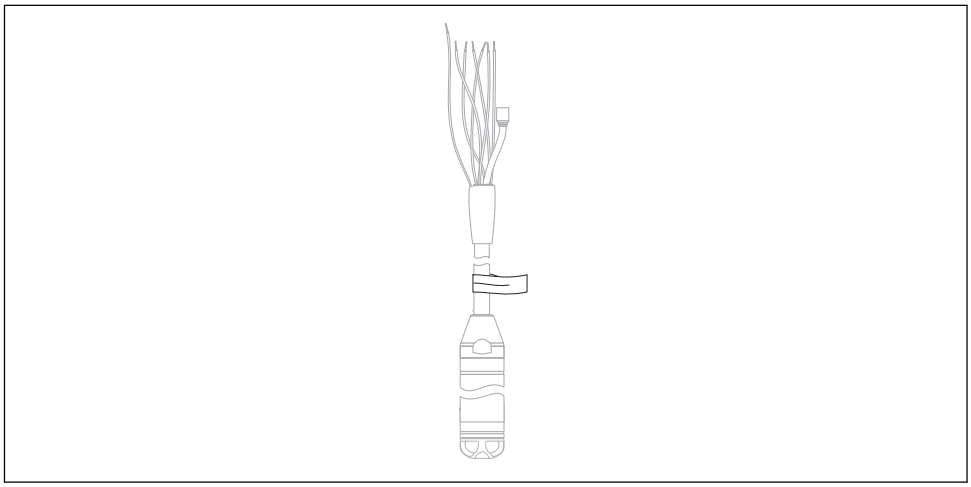

A0030955

- To make installation easier, Endress+Hauser marks the extension cable if a customer-specific length has been ordered.
  Ordering information: Product Configurator order code for "Service", option "IR" or "IS".
- Cable marking tolerance (distance to lower end of level probe):
  Cable length < 5 m (16 ft): ±17.5 mm (0.69 in)
  Cable length > 5 m (16 ft): ±0.2 %
- Material: PET, stick-on label: acrylic
- Immunity to temperature change: −30 to +100 °C (−22 to +212 °F)

NOTICE

The marking is used exclusively for installation purposes.

▶ The mark must be thoroughly removed without trace in the case of devices with drinking water approval. The extension cable must not be damaged in the process.

Not for use of the FMX21 in hazardous areas.

Cable shortening kit

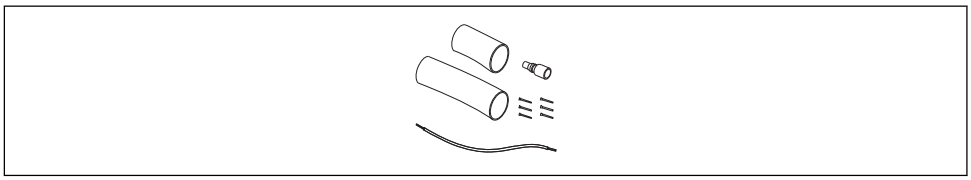

A0030948

The cable shortening kit is used to shorten a cable easily and professionally.

The cable shortening kit is not designed for the FMX21 with FM/CSA approval.

- Ordering information: Product Configurator order code for "Accessories enclosed", option "PW"
- Associated documentation SD00552P/00/A6.

Environment

Ambient temperature range

FMX21 + Pt100 (optional)

- With external diameter of 22 mm (0.87 in) and 42 mm (1.65 in):
  −10 to +70 °C (+14 to +158 °F) (= medium temperature)
- With external diameter of29 mm (1.14 in):
  0 to +50 °C (+32 to +122 °F) (= medium temperature)

Cable

(when mounted in a fixed position)
- With PE: −30 to +70 °C (−22 to +158 °F)
- With FEP: −40 to +70 °C (−40 to +158 °F)
- With PUR: −40 to +70 °C (−40 to +158 °F)

Terminal box

−40 to +80 °C (−40 to +176 °F)

TMT181 temperature head transmitter (optional) for FMX21 4 to 20 mA Analog

−40 to +85 °C (−40 to +185 °F)

Temperature head transmitter 2-wire, configured for a measuring range of −20 to +80 °C (−4 to +176 °F). This configuration offers a temperature range of 100 K which can be easily mapped. Please note that the Pt100 resistance temperature detector is suitable for a temperature range of −10 to +70 °C (14 to +158 °F)

The TMT181 temperature head transmitter is not designed for use in hazardous areas incl. CSA GP.

TMT182 temperature head transmitter (optional) for FMX21 4 to 20 mA HART

−40 to +85 °C (−40 to +185 °F)

Temperature head transmitter 2-wire, configured for a measuring range of −20 to +80 °C (−4 to +176 °F). This configuration offers a temperature range of 100 K which can be easily mapped. Please note that the Pt100 resistance temperature detector is suitable for a temperature range of −10 to +70 °C (14 to +158 °F)

The TMT182 temperature head transmitter is not designed for use in hazardous areas incl. CSA GP.

Storage temperature range

FMX21 + Pt100 (optional)

−40 to +80 °C (−40 to +176 °F)

Cable

(when mounted in a fixed position)
- With PE: −30 to +70 °C (−22 to +158 °F)
- With FEP: −30 to +80 °C (−22 to +176 °F)
- With PUR: −40 to +80 °C (−40 to +176 °F)

Terminal box

−40 to +80 °C (−40 to +176 °F)

TMT181 temperature head transmitter (optional) for FMX21 4 to 20 mA Analog

−40 to +100 °C (−40 to +212 °F)

TMT182 temperature head transmitter (optional) for FMX21 4 to 20 mA HART

−40 to +100 °C (−40 to +212 °F)

Degree of protection

FMX21 + Pt100 (optional)

IP68, permanently hermetically sealed at 20 bar (290 psi) (~200 m H_2O)

Terminal box (optional)

IP66, IP67

TMT181 temperature head transmitter (optional) for FMX21 4 to 20 mA Analog

IP00, condensation permitted

When installed in the optional terminal boxes: IP66/IP67

TMT182 temperature head transmitter (optional) for FMX21 4 to 20 mA HART

IP00, condensation permitted

Electromagnetic compatibility (EMC)

FMX21 + Pt100 (optional)

- EMC in accordance with all relevant requirements of EN 61326 series. For details, refer to the Declaration of Conformity.
- Maximum deviation: < 0.5 % of span.

TMT181 temperature head transmitter (optional) for FMX21 4 to 20 mA Analog

Interference emission to EN 61326 Class B equipment, interference immunity to EN 61326 Appendix A (Industrial). For details, refer to the Declaration of Conformity.

TMT182 temperature head transmitter (optional) for FMX21 4 to 20 mA HART

EMC in accordance with all relevant requirements of EN 61326 series. For details, refer to the Declaration of Conformity.

Overvoltage protection

FMX21 + Pt100 (optional)

- Integrated overvoltage protection as per EN 61000-4-5 (500 V symmetrical/1000 V asymmetrical)
- Overvoltage protection ≥ 1.0 kV, external if necessary

TMT181 temperature head transmitter (optional) for FMX21 4 to 20 mA Analog

Provide overvoltage protection, externally if necessary → 10.

TMT182 temperature head transmitter (optional) for FMX21 4 to 20 mA HART

Provide overvoltage protection, externally if necessary → 10.

Process

Medium temperature range

FMX21 + Pt100 (optional)

- With external diameter of 22 mm (0.87 in) and 42 mm (1.65 in):
  −10 to +70 °C (+14 to +158 °F)
- With external diameter of 29 mm (1.14 in):
  0 to +50 °C (+32 to +122 °F)

TMT181 temperature head transmitter (optional) for FMX21 4 to 20 mA Analog

−40 to +85 °C (−40 to +185 °F)

(= ambient temperature), install temperature head transmitter outside the medium.

Temperature head transmitter 2-wire, configured for a measuring range of −20 to +80 °C (−4 to +176 °F). This configuration offers a temperature range of 100 K which can be easily mapped. Please note that the Pt100 resistance temperature detector is suitable for a temperature range of −10 to +70 °C (14 to +158 °F)

The TMT181 temperature head transmitter is not designed for use in hazardous areas incl. CSA GP.

TMT181 temperature head transmitter (optional) for FMX21 4 to 20 mA HART

−40 to +85 °C (−40 to +185 °F)

(= ambient temperature), install temperature head transmitter outside the medium.

Temperature head transmitter 2-wire, configured for a measuring range of −20 to +80 °C (−4 to +176 °F). This configuration offers a temperature range of 100 K which can be easily mapped. Please note that the Pt100 resistance temperature detector is suitable for a temperature range of −10 to +70 °C (14 to +158 °F)

The TMT182 temperature head transmitter is not designed for use in hazardous areas incl. CSA GP.

Medium temperature limit

FMX21 + Pt100 (optional)

With external diameter of 22 mm (0.87 in) and 42 mm (1.65 in):
−20 to +70 °C (−4 to +158 °F)

In hazardous areas incl. CSA GP, the medium temperature limit is −10 to +70 °C (+14 to +158 °F).

With external diameter of29 mm (1.14 in): 0 to +50 °C (+32 to +122 °F)

The FMX21 may be operated in this temperature range. The specification values, such as accuracy, may be exceeded.

Pressure specifications

⚠ WARNING

The maximum pressure for the measuring device depends on the lowest-rated element with regard to pressure.

- For pressure specifications, see the "Measuring range" section and the "Mechanical construction" section.
- The measuring device must be operated only within the specified limits!
- The Pressure Equipment Directive (2014/68/EU) uses the abbreviation "PS". The abbreviation "PS" corresponds to the MWP (maximum working pressure) of the measuring device.
- MWP (maximum working pressure): The MWP (maximum working pressure) is specified on the nameplate. This value refers to a reference temperature of +20 °C (+68 °F) and may be applied to the device for an unlimited time. Observe temperature dependency of the MWP.
- OPL (Over Pressure Limit = sensor overload limit): The test pressure corresponds to the over pressure limit of the sensor and may only be applied for a limited time period to ensure measurement within specification and in order to avoid permanent damage. In the case of sensor range and process connections where the over pressure limit (OPL) of the process connection is smaller than the nominal value of the sensor, the device is set at the factory, at the very maximum, to the OPL value of the process connection. If you want to use the entire sensor range, select a process connection with a higher OPL value.
- avoid steam hammering! Steam hammering can cause zero point drifts. Recommendation: Residue (such as condensation or drops of water) can remain on the process isolating diaphragm after CIP cleaning and lead to local steam hammering if steam cleaning is performed again. In practice, drying the process isolating diaphragm (e.g. by blowing) has proved to prevent steam hammering.

Mechanical construction

Dimensions of the level probe

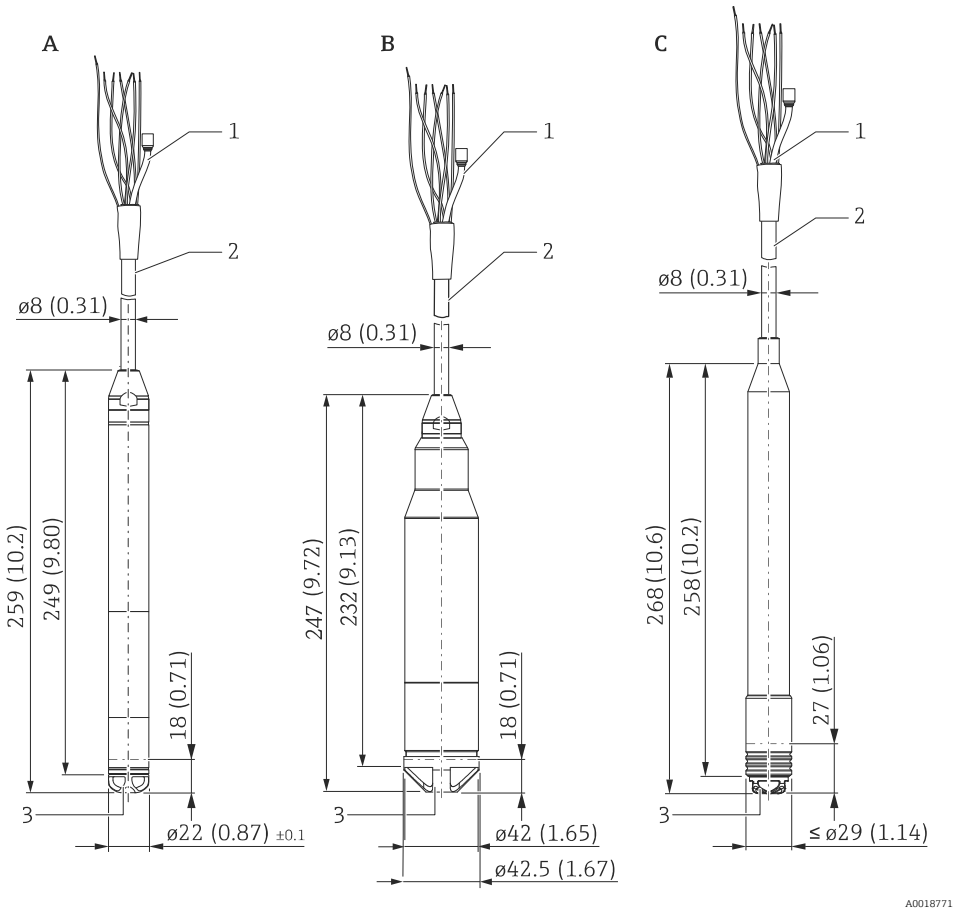

A Product Configurator order code for "Probe tube", option "1" or "Accessories"
B Product Configurator order code for "Probe tube", option "2"
C Product Configurator order code for "Probe tube", option "5"
1 Pressure compensation tube
2 Extension cable (length, see → 🖹 28
3 Protection cap

Engineering unit mm (in)

Dimensions of the mounting clamp

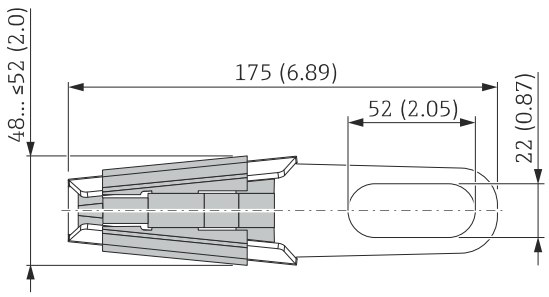

Engineering unit mm (in)

Ordering information: Product Configurator order code for "Accessories", option "PO" → 52

Dimensions of cable mounting screw

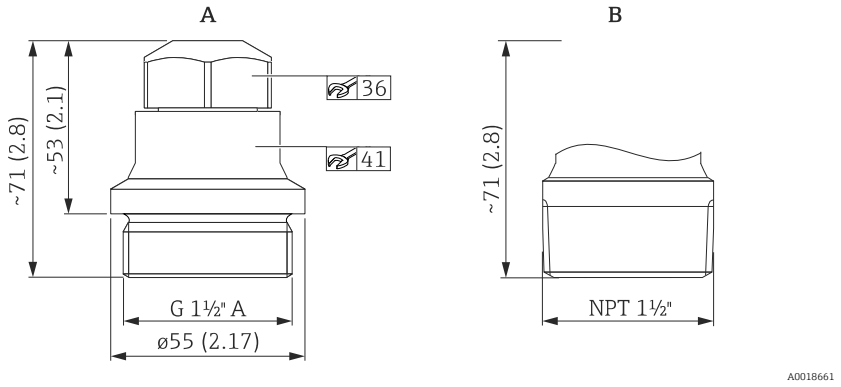

A G 1½" A: Product Configurator order code for "Accessories", option "PQ" → 52
B NPT 1½": Product Configurator order code for "Accessories", option "PR" → 52

Engineering unit mm (in)

Use only in unpressurized vessels.

Dimensions of terminal box IP66, IP67 with filter

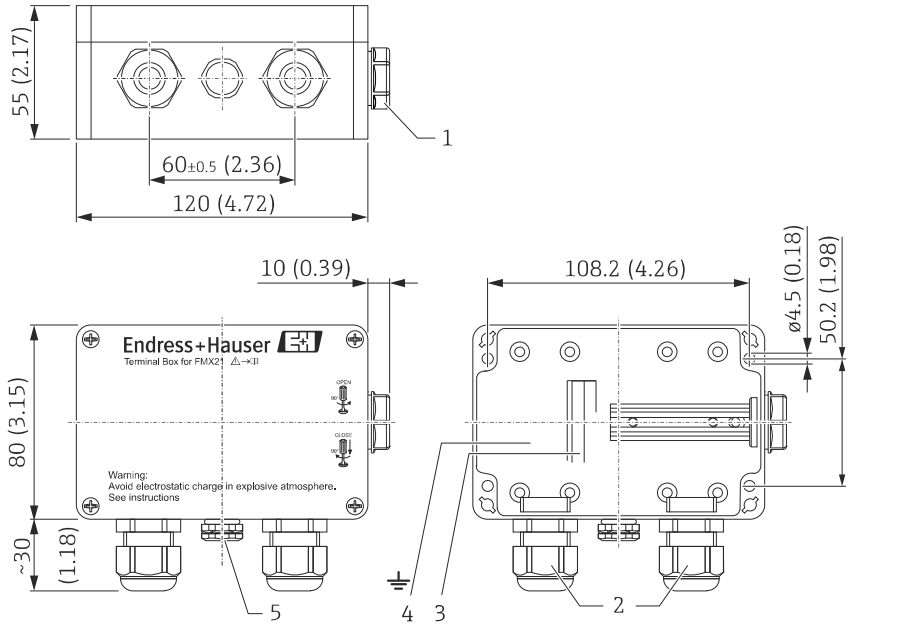

1 *Dummy plug M20x1.5*
2 *Cable gland M20x1.5*
3 *4 to 20 mA; terminals for 0.08 to 2.5 mm (28 to 14 AWG)0.08 to.2.5 mm²*
4 *Ground connection; terminals for 0.08 to 2.5 mm (28 to 14 AWG)0.08 to 2.5 mm²*
5 *GORE-TEX® filter*

Engineering unit mm (in)

Terminal box IP66/IP67 with GORE-TEX® filter incl. 3 integrated terminals. The terminal box is also suitable for the installation of a temperature head transmitter or four other terminals

Ordering information:
- Terminal box: Product Configurator order code for "Accessories enclosed", option "PS" → 52
- TMT181: Product Configurator order code for "Accessories enclosed", option "PX" → 52
- TMT182: Product Configurator order code for "Accessories enclosed", option "PT" → 52

The terminal box is not designed for the FMX21 with type of protection Ex nA in hazardous areas. If the terminal box is used in a hazardous area, the Safety Instructions of the relevant device must be observed, as well as the applicable regulations for explosion protection.

If the FMX21 with optional Pt100 is supplied, a terminal strip is provided with the terminal box for the purpose of wiring the Pt100.

The 4-terminal strip is not designed for use in hazardous areas incl. CSA GP.

Dimensions of the TMT181 temperature head transmitter for FMX21 4 to 20 mA Analog

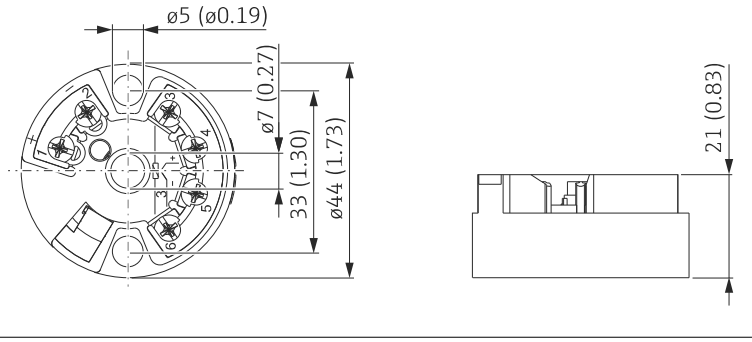

Engineering unit mm (in)

Ordering information:

Product Configurator order code for "Accessories enclosed", option "PX" → 🖹 52

Dimensions of the TMT182 temperature head transmitter for FMX21 4 to 20 mA HART

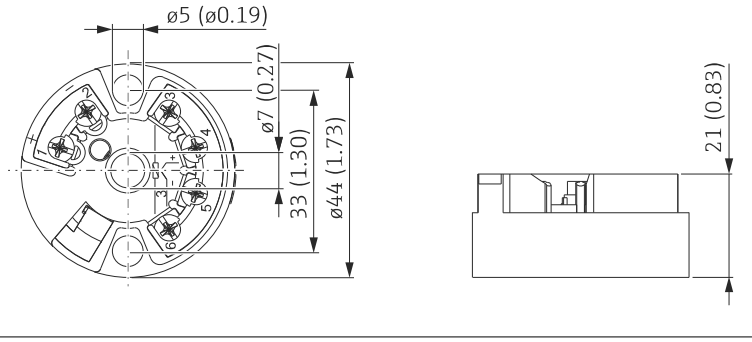

Engineering unit mm (in)

Ordering information:

Product Configurator order code for "Accessories enclosed", option "PT" → 🖹 52

Terminal box with integrated TMT181 temperature head transmitter for FMX21 4 to 20 mA Analog

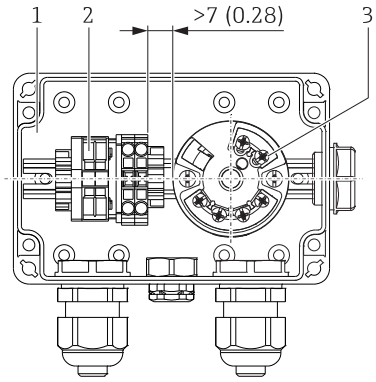

1 Terminal box
2 Terminal strip/terminals
3 TMT181 temperature head transmitter

Engineering unit mm (in)

A distance of > 7 mm (0.28 in) must be maintained between the terminal strip and the TMT181 temperature head transmitter.

Terminal box with integrated TMT182 temperature head transmitter for FMX21 4 to 20 mA HART

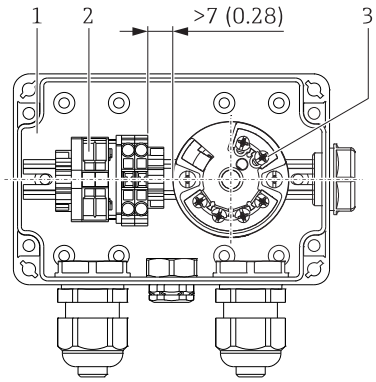

1 Terminal box
2 Terminal strip/terminals
3 TMT182 temperature head transmitter

Engineering unit mm (in)

A distance of > 7 mm (0.28 in) must be maintained between the terminal strip and the TMT182 temperature head transmitter.

Additional weight

For FMX21 with external diameter of 22 mm (0.87 in) or 29 mm (1.14 in)

- Endress+Hauser offers additional weights to prevent sideways movement that results in measuring errors, or to make it easier to lower the device in a guide tube. You can screw several weights together. The weights are screwed directly onto the FMX21. For the FMX21 with external diameter of 29 mm (1.14 in), a maximum of 5 weights may be screwed on. In conjunction with the Ex nA approval, a maximum of one additional weight is permitted for the FMX21 with external diameter of 29 mm (1.14 in).
- Order number: 52006153 Ordering information: Product Configurator order code for "Accessories enclosed", option "PU"

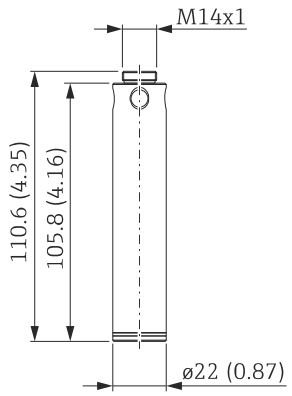

Engineering unit mm (in)

Testing adapter

For FMX21 with external diameter of 22 mm (0.87 in) or 29 mm (1.14 in)

- Endress+Hauser offers a testing adapter to ease function-testing of the level probes.
- Observe the maximum pressure for compressed air hose and maximum overload for level probe → 🖹 14
- Maximum pressure for the quick coupling piece provided: 10 bar (145 psi)
- Adapter material: 304 (1.4301)
- Material of quick coupling piece: anodized aluminum
- Order number 52011868
  Ordering information: Product Configurator order code for "Accessories enclosed", option "PV"

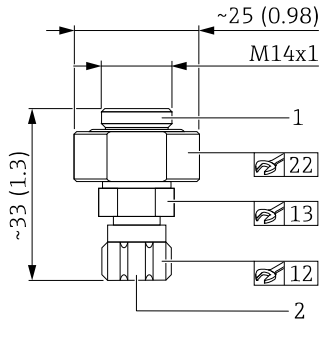

1 FMX21 level probe connection
2 Compressed air hose connection, internal diameter, quick coupling piece 4 mm (0.16 in)

Engineering unit mm (in)

RIA15 in the field housing

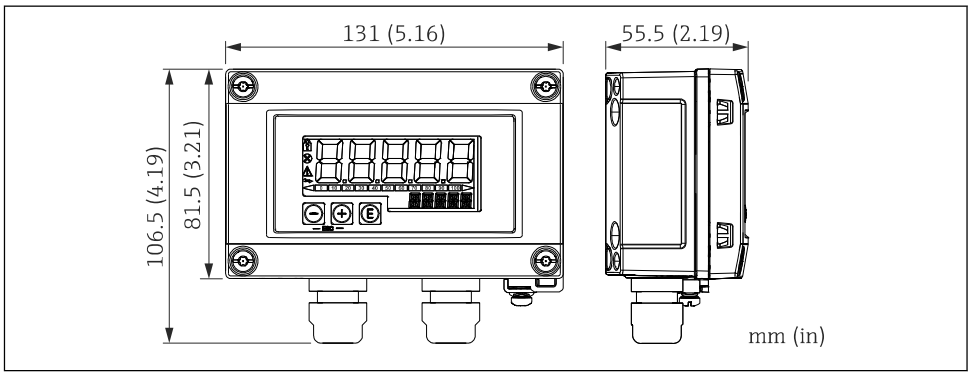

5 *Dimensions of RIA15 in field housing, engineering unit: mm (in)*

The RIA15 remote display can be ordered together with the device. Product structure, feature 620 "Accessories enclosed":

- Option R4 "Remote display RIA15 non-hazardous area, field housing"
- Option R5 "Remote display RIA15 Ex= explosion protection approval, field housing"

Alternatively available as an accessory, for details see Technical Information TI01043K and Operating Instructions BA01170K

HART communication resistor

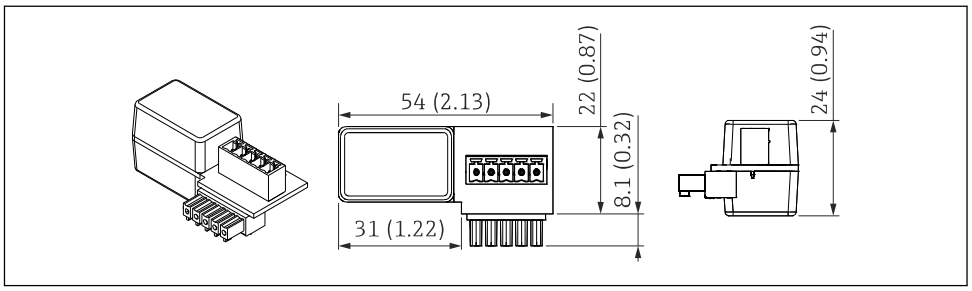

6 *Dimensions of HART communication resistor, engineering unit: mm (in)*

A communication resistor is required for HART communication. If this is not already present (e.g. in the power supply RMA, RN221N, RNS221, ...), it can be ordered with the device via the product structure, feature 620 "Accessories enclosed": option R6 "HART communication resistor hazardous / non-hazardous area".

Alternatively available as an accessory, for details see Technical Information TI01043K and Operating Instructions BA01170K

The HART communication resistor is specially designed for use with the RIA15 and can be attached easily.

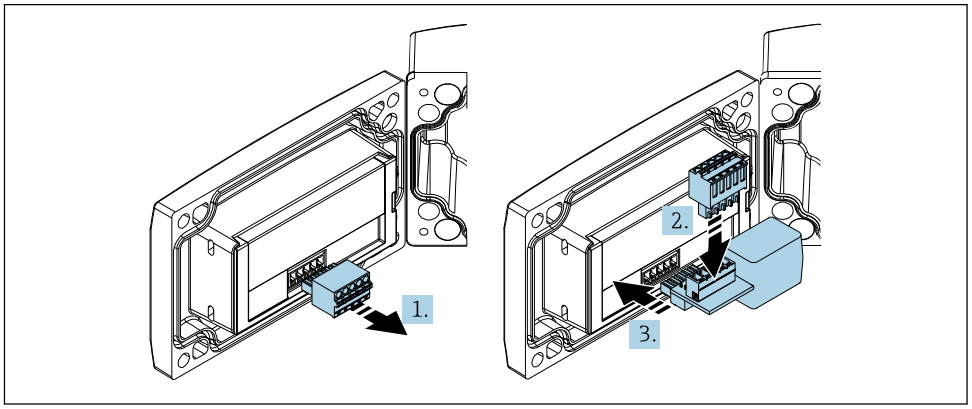

1. Disconnect plug-in terminal block.
2. Insert the terminal block into the slot provided on the HART communication resistor module.
3. Insert the HART communication resistor in the slot in the housing.

Weight

Component part		Weight
Level probe, external diameter of 22 mm (0.87 in)		344 g (12.133 oz)
Level probe, external diameter of 42 mm (1.65 in)		1376 g (48.532 oz)
Level probe, external diameter of 29 mm (1.14 in)		394 g (13.896 oz)
Extension cable	PE	52 g/m (0.035 lbs/1 ft)
	PUR	60 g/m (0.040 lbs/1 ft)
	FEP	108 g/m (0.072 lbs/1 ft)
Suspension clamp		170 g (5.996 oz)
Cable mounting screw G 1½" A		770 g (27.158 oz)
Cable mounting screw NPT 1½"		724 g (25.535 oz)
Terminal box		235 g (8.288 oz)
TMT181 temperature head transmitter		40 g (1.411 oz)
TMT182 temperature head transmitter		40 g (1.411 oz)
Additional weight		300 g (10.581 oz)
Testing adapter		39 g (1.376 oz)

Materials

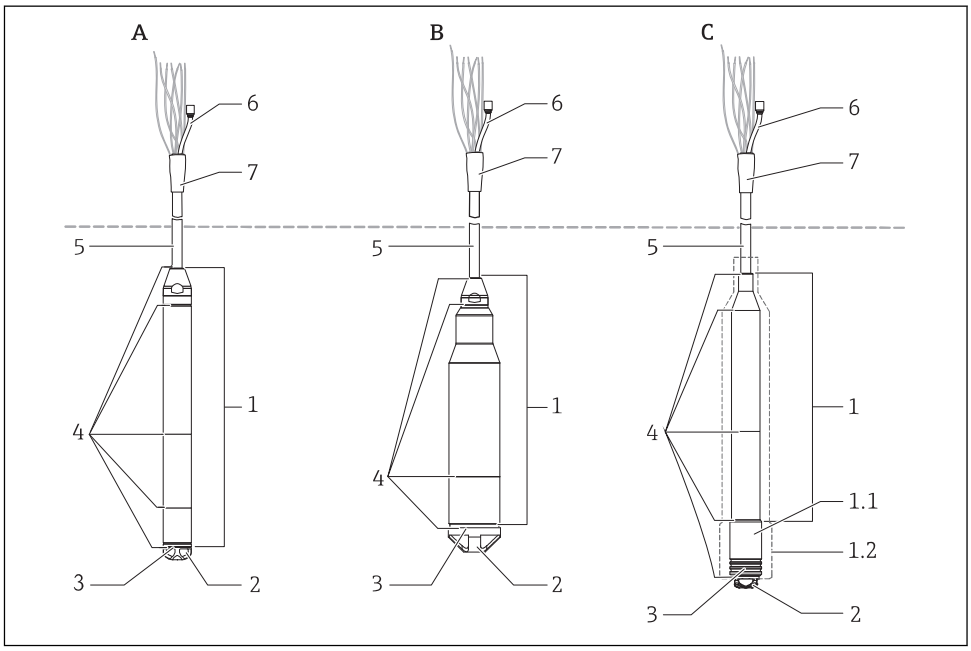

Materials in contact with process

Item number	Component part	Material
1	▪ A: Level probe, external diameter of 22 mm (0.87 in) ▪ B: Level probe, external diameter of 42 mm (1.65 in) ▪ C: Level probe, max. external diameter of 29 mm (1.14 in)	316L (1.4404/1.4435) [1]
1.1	Sensor sleeve	PPS (Polyphenylene sulfide)
1.2	Heat-shrink tube	Polyolefin and hot melt adhesive
	The heat-shrink tube around the level probe acts as insulation. It prevents electrical contact between the level probe and the tank. Electrochemical corrosion is thus avoided.	
2	Protection cap for A and C: with outer diameter 22 mm (0.87 in) and 29 mm (1.14 in) (order number: 52008999)	POM
	Protection cap for B: device with outer diameter 42 mm (1.65 in) (order number: 917755-0000)	PFA
3	Process ceramic	Al_2O_3 (Aluminum oxide ceramic)
4	Seal	EPDM [2]
		FKM Viton [3]
5	Extension cable insulation Additional information	Choose from: ▪ PE-LD (Low-density polyethylene) ▪ FEP (Fluorinated ethylene propylene) ▪ PUR (Polyurethane)

1) Material 316L (1.4404/1.4435) is not in contact with the process in the case of level probe C
2) Product Configurator order code for "Seal", option "H"
3) Product Configurator order code for "Seal", option "A"

Materials not in contact with process

Item number	Component part	Material
6	Pressure compensation tube	PA
7	Heat-shrink tube	Polyolefin

Terminal box (not in contact with process)

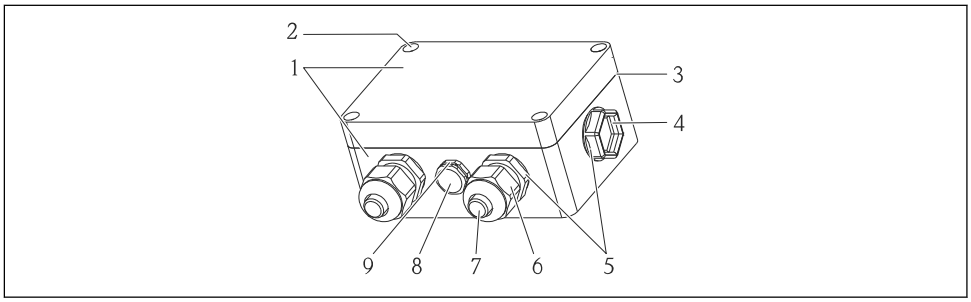

A0018917

Item number	Component part	Material
1	Housing	PC
2	Mounting screws (4 x)	A2
3	Seal	CR (Chloroprene rubber)
4	Dummy plug M20x1.5	PBT-GF30
5	Cable gland M20x1.5	PE-HD
6		PA6
7		PA6-GF30
8	Pressure compensation filter	PA6-GF10, ePTFE
9	Pressure compensation filter, O-ring	Silicone (VMQ)

Cable mounting screw (not in contact with process)

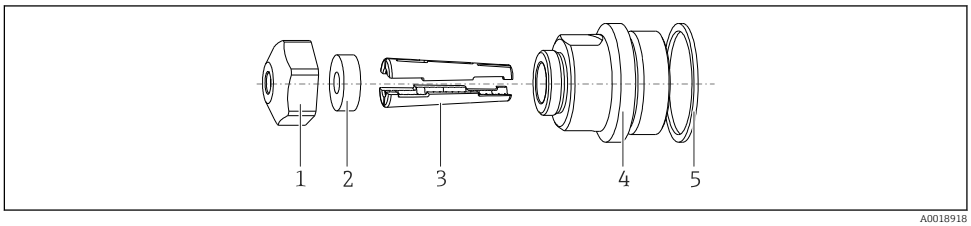

A0018918

Item number	Component part	Material
1	Cover for cable mounting screw	304 (1.4301)
2	Sealing ring	NBR
3	Clamping sleeves	PA66-GF35
4	Adapter for cable mounting screw G 1½" A, NPT 1½"	304 (1.4301)
5	Seal ® Only for G 1½" A	EPDM

Suspension clamp

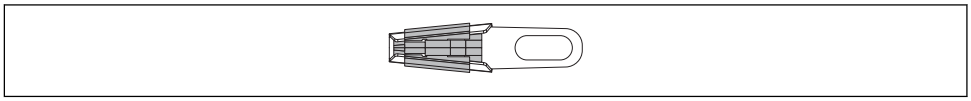

A0030950

Material: 316L (1.4404) and fiber-glass reinforced PA (polyamide)

Additional weight

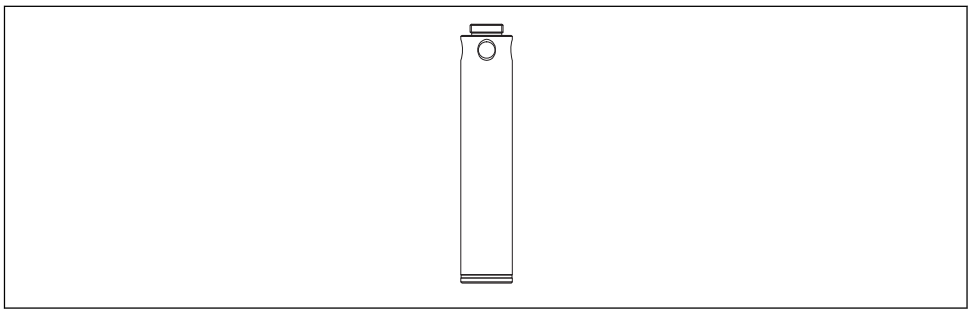

A0030954

Material: 316L (1.4435)

Testing adapter for FMX21 with outer diameter 22 mm (0.87 in) or 29 mm (1.14 in)

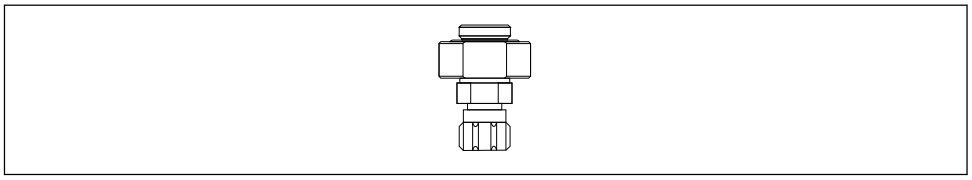

A0030956

Adapter material: 304 (1.4301)

Material of quick coupling piece: anodized aluminum

Testing adapter for FMX21 with outer diameter 42 mm (1.65 in)

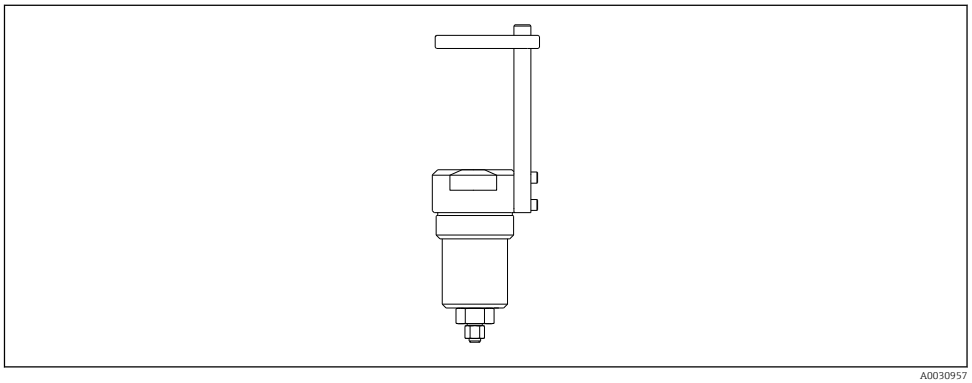

A0030957

Adapter material: 304 (1.4301)

Material of quick coupling piece: anodized aluminum

Extension cable

PE	PUR	FEP
▪ Abrasion-resistant extension cable with strain-relief members made of high-strength PE fibers ▪ Shielded (aluminum) ▪ Insulated with polyethylene (PE), black ▪ Copper wires, twisted ▪ Pressure compensation tube with Teflon filter	▪ Abrasion-resistant extension cable with strain-relief members made of high-strength PE fibers ▪ Shielded (aluminum) ▪ Insulated with polyurethane (PUR), black ▪ Copper wires, twisted ▪ Pressure compensation tube with Teflon filter	▪ Abrasion-resistant extension cable ▪ Shielded with galvanized steel wire netting ▪ Insulated with fluorinated ethylene propylene (FEP), black ▪ Copper wires, twisted ▪ Pressure compensation tube with Teflon filter

Operability

FMX21 4 to 20 mA Analog

No display or other operation facility is required to operate the device. However, the measured values can be read out with optional evaluation units.

FMX21 4 to 20 mA HART

FieldCare

FieldCare is an Endress+Hauser asset management tool based on FDT technology. With FieldCare, you can configure all Endress+Hauser devices as well as devices from other manufacturers that support the FDT standard.

FieldCare supports the following functions:
- Configuration of transmitters in online and offline mode
- Loading and saving device data (upload/download)
- Documentation of the measuring point

Connection options:
- Via Commubox FXA195 and the USB interface of a computer
- Via Fieldgate FXA520

For additional information and free download of FieldCare, see → www.de.endress.com → Download → Text Search: FieldCare

DeviceCare

Function scope

Tool for connecting and configuring Endress+Hauser field devices.

The fastest way to configure Endress+Hauser field devices is with the dedicated "DeviceCare" tool. Together with the device type managers (DTMs) it presents a convenient, comprehensive solution.

For details, see Innovation brochure IN01047S

Field Xpert SFX

Field Xpert SFX is an industrial PDA with integrated 3.5" touchscreen from Endress+Hauser based on Windows Mobile. It offers wireless communication via the optional VIATOR® Bluetooth ® modem as a point-to-point connection to a HART device, or via WiFi and Endress+Hauser's Fieldgate FXA520 to one or more HART devices. Field Xpert also works as a stand-alone device for asset management applications. For details, refer to BA00060S/04/EN.

RIA15

The RIA15 can be used as a local display unit and for the basic commissioning of the Waterpilot FMX21 hydrostatic level sensor via HART.

Certificates and approvals

CE mark

The device meets the legal requirements of the relevant EC directives. Endress+Hauser confirms that the device has been successfully tested by applying the CE mark.

RCM-Tick marking

The supplied product or measuring system meets the ACMA (Australian Communications and Media Authority) requirements for network integrity, interoperability, performance characteristics as well as health and safety regulations. Here, especially the regulatory arrangements for electromagnetic compatibility are met. The products are labelled with the RCM- Tick marking on the name plate.



A0029561

Ex approvals

- ATEX
- CSA C/US
- FM
- IEC
- NEPSI
- INMETRO

- The approvals apply exclusively to the Waterpilot FMX21 without Pt100 and without TMT181/TMT182.
- Waterpilot FMX21 is only available for use in hazardous areas with the FKM Viton seal.
- All explosion protection data are given in separate documentation which is available upon request. The Ex documentation is supplied as standard with all Ex-systems → 📄 5.

EAC conformity

The measuring system meets the legal requirements of the applicable EAC guidelines. These are listed in the corresponding EAC Declaration of Conformity together with the standards applied.

Endress+Hauser confirms successful testing of the device by affixing to it the EAC mark.

Drinking water approval

For FMX21 with an external diameter of 22 mm (0.87 in) with EPDM seal

Designation	Option [1]
KTW	LQ
NSF61	LR
ACS	LS

1) Product Configurator order code for "Additional ordering information (optional)"

Marine approval

For FMX21 with outer diameter 22 mm (0.87 in).

Designation	Option [1]
GL	LE
ABS	LF
BV	LH
DNV	LI

1) Product Configurator order code for "Additional ordering information (optional)"

Other standards and guidelines

The applicable European guidelines and standards can be found in the relevant EU Declarations of Conformity. The following were also applied:

DIN EN 60770 (IEC 60770):

Transmitters for use in industrial process control systems Part 1: Methods for performance evaluation

Methods for evaluating the performance of transmitters for control and regulation in industrial process control systems.

DIN 16086:

Electrical pressure measuring instruments, pressure sensors, pressure transmitters, pressure measuring instruments, concepts, specifications on data sheets

Procedure for writing specifications in data sheets for electrical pressure measuring instruments, pressure sensors and pressure transmitters.

EN 61326:

Electrical equipment for measurement, control and laboratory use – EMC requirements

EN 61010-1 (IEC 61010-1):

Protection Measures for Electrical Equipment for Measurement, Control, Regulation and Laboratory Procedures

EN 60529:

Degrees of protection provided by enclosures (IP code)

Calibration

Designation	Option [1]
Factory calibration certificate, 5-point	F1

1) Product Configurator order code for "Calibration"

Pressure Equipment Directive 2014/68/EU (PED)

Pressure equipment with allowable pressure ≤ 200 bar (2 900 psi)

Pressure equipment (with a maximum allowable pressure PS ≤ 200 bar (2 900 psi)) can be classified as pressure accessories in accordance with Pressure Equipment Directive 2014/68/EU. If the maximum allowable pressure is ≤ 200 bar (2 900 psi) and the pressurized volume of the pressure equipment is ≤ 0.1 l, the pressure equipment is subject to the Pressure Equipment Directive (cf. Pressure Equipment Directive 2014/68/EU, Article 4, point 3). The Pressure Equipment Directive only requires that the pressure equipment shall be designed and manufactured in accordance with the "sound engineering practice of a Member State".

Reasons:

- Pressure Equipment Directive (PED) 2014/68/EU Article 4, point 3
- Pressure equipment directive 2014/68/EU, Commission's Working Group "Pressure", Guideline A-05 + A-06

Note:

A partial examination shall be performed for pressure instruments that are part of safety equipment for the protection of a pipe or vessel from exceeding allowable limits (safety accessory in accordance with Pressure Equipment Directive 2014/68/EU, Article 2, point 4).

Calibration unit

Designation	Option [1]
Sensor range; %	A
Sensor range; mbar/bar	B
Sensor range; kPa/MPa	C
Sensor range; mm/m H2O	D
Sensor range; in H2O/ft H2O	E

Designation	Option [1]
Sensor range; psi	F
Customized pressure; see additional specification	J
Customized level; see additional specification	K

1) Product Configurator order code for "Calibration; unit"

Service

Designation	Option [1]
Configured min alarm current	IA
Adjusted HART Burst Mode PV	IB
Adjusted density compensation	IC
... m cable marking>installation	IR
... ft cable marking>installation	IS
Special version	I9

1) Product Configurator order code for "Service"

Downloading the Declaration of Conformity

http://www.endress.com/en/download



1. Select "Approvals & Certificates"
2. Select "Manufact. Declaration"
3. Enter the required product code
4. Click "Search"

The available downloads are displayed.

Ordering information

Detailed ordering information is available from the following sources:
- In the Product Configurator on the Endress+Hauser website: www.endress.com -> Click "Corporate" -> Select your country -> Click "Products" -> Select the product using the filters and search field -> Open product page -> The "Configure" button to the right of the product image opens the Product Configurator.
- From your Endress+Hauser Sales Center: www.addresses.endress.com

Product Configurator - the tool for individual product configuration
- Up-to-the-minute configuration data
- Depending on the device: Direct input of measuring point-specific information such as measuring range or operating language
- Automatic verification of exclusion criteria
- Automatic creation of the order code and its breakdown in PDF or Excel output format
- Ability to order directly from the Endress+Hauser Online Shop

Scope of delivery

- Measuring device
- Optional accessories
- Brief Operating Instructions
- Certificates

Configuration data sheet

Level

The following configuration data sheet must be completed and included with the order if option "K: customized level" has been selected for order code "090: Calibration; unit" in the product structure.

Pressure unit				**Output unit (scaled unit)**				
				Mass	Lengths	Volume	Volume	Percent
❑ mbar	❑ mmH_2O	❑ mmHg	❑ Pa	❑ kg	❑ m	❑ l	❑ gal	❑ %
❑ bar	❑ mH_2O		❑ kPa	❑ t	❑ dm	❑ hl	❑ Igal	
	❑ ftH_2O		❑ MPa	❑ lb	❑ cm			
❑ psi	❑ inH_2O	❑ kgf/cm^2			❑ mm	❑ m^3		
						❑ ft^3		
					❑ ft	❑ in^3		
					❑ inch			

Empty calibration [a]:
Low pressure value (empty) _____ [pressure engineering unit]

Empty calibration [a]:
Low pressure value (empty) _____ [scaled unit]

Full calibration [b]:
High pressure value (full) _____ [pressure engineering unit]

Full calibration [b]:
High measured value (full) _____ [scaled unit]

Damping
Damping: _____ sec

Pressure

The following configuration data sheet must be completed and included with the order if option "J: customized pressure" has been selected for order code "090: Calibration; unit" in the product structure.

Pressure unit			
❑ mbar	❑ mmH_2O	❑ mmHg	❑ Pa
❑ bar	❑ mH_2O		❑ kPa
	❑ ftH_2O		❑ MPa
❑ psi	❑ inH_2O	❑ kgf/cm^2	

Calibration range / Output		
Lower-range value (LRV):	_____	[pressure engineering unit]
Upper-range value (URV):	_____	[pressure engineering unit]

Damping		
Damping:	_____	sec

Accessories

⚠ CAUTION

Observe the additional information in the individual sections!

▶ For additional information, see the sections "Mechanical construction" → 📄 35 , "Environment", → 📄 31, "Process" → 📄 33 and "Installation" → 📄 27.

Designation	Diagram	Description	Order number / ordering information
Suspension clamp	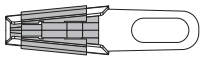 A0030950	For easy installation of the FMX21, Endress+Hauser offers a mounting clamp .	▪ 52006151 ▪ Product Configurator order code for "Accessory enclosed", option "PO"
Terminal box	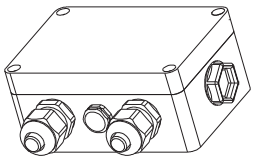 A0030967	Terminal box for terminal strip, temperature head transmitter and Pt100.	▪ 52006152 ▪ Product Configurator order code for "Accessories enclosed", option "PS"
4-terminal strip/terminals	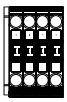 A0030951	4-terminal strip for wiring	52008938
TMT181 temperature head transmitter for FMX21 4 to 20 mA Analog	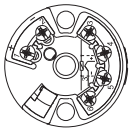 A0030952	PC-programmable (PCP) temperature head transmitter for the conversion of various input signals	▪ 52008794 ▪ Product Configurator order code for "Accessories enclosed", option "PX"
TMT182 temperature head transmitter for FMX21 4 to 20 mA HART	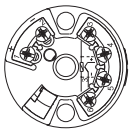 A0030952	PC-programmable (PCP) temperature head transmitter for the conversion of various input signals	▪ 51001023 ▪ Product Configurator order code for "Accessories enclosed", option "PT"
Cable mounting screws	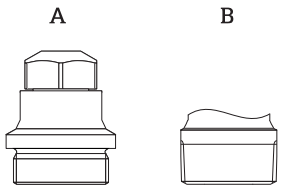 A0030953 *A G 1½" A* *B NPT 1½"*	Endress+Hauser offers a cable mounting screw for easy FMX21 mounting and to seal the measuring aperture.	▪ G 1½" A – 52008264 – Product Configurator order code for "Accessories enclosed", option "PQ" ▪ NPT 1½" – 52009311 – Product Configurator order code for "Accessories enclosed", option "PR"
Additional weight for FMX21 with outer diameter 22 mm (0.87 in) or 29 mm (1.14 in)	 A0030954	Endress+Hauser offers additional weights to prevent sideways movement that results in measuring errors, or to make it easier to lower the device in a guide tube.	▪ 52006153 ▪ Product Configurator order code for "Accessories enclosed", option "PU"

Designation	Diagram	Description	Order number / ordering information
Cable shortening kit	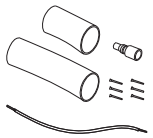 A0030948	The cable shortening kit is used to shorten a cable easily and professionally.	▪ 71222671 ▪ Product Configurator order code for "Accessories enclosed", option "PW"
Testing adapter for FMX21 with outer diameter 22 mm (0.87 in) or 29 mm (1.14 in)	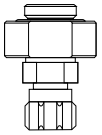 A0030956	Endress+Hauser offers a testing adapter to ease function-testing of the level probes.	▪ 52011868 ▪ Product Configurator order code for "Accessories enclosed", option "PV"
Testing adapter for FMX21 with outer diameter 42 mm (1.65 in)	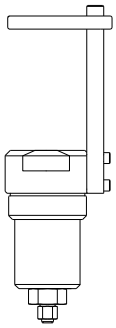 A0030957	Endress+Hauser offers a testing adapter to ease function-testing of the level probes. ▪ Observe the maximum pressure for compressed air hose and maximum overload for level probe ▪ Maximum pressure for the quick coupling piece provided: 10 bar (145 psi)	71110310
RIA15 in the field housing	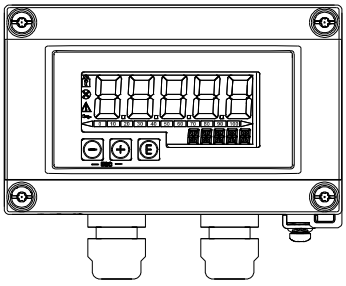 A0036164	Remote display RIA15 non-hazardous	Product structure, feature 620 "Accessory enclosed", option R4 "Remote display RIA15 non-hazardous area, field housing"
		Remote display RIA15 hazardous	Product structure, feature 620 "Accessory enclosed", option R5 "Remote display RIA15 Ex= explosion protection approval, field housing"
HART communication resistor	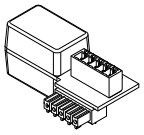 A0036165	HART communication resistor, hazardous / non-hazardous area, for use with RIA15	Product structure, feature 620 "Accessory enclosed", option R6 "HART communication resistor hazardous / non-hazardous area"

Service-specific accessories

Accessories	Description
DeviceCare SFE100	Configuration tool for HART, PROFIBUS and FOUNDATION Fieldbus field devices Technical Information TI01134S DeviceCare is available for download at www.software-products.endress.com. You need to register in the Endress+Hauser software portal to download the application.
FieldCare SFE500	FDT-based plant asset management tool FieldCare can configure all smart field units in your plant and helps you manage them. By using the status information, FieldCare is also a simple but effective way of checking the status and condition of the field devices. Technical Information TI00028S

Supplementary documentation

The following document types are also available in the Downloads area of the Endress+Hauser website: www.endress.com → Downloads

Field of Activities

- Pressure measurement: FA00004P/00/EN
- Recording technology: FA00014R/09/EN
- System components: FA00016K/09/EN

Technical Information

- Deltapilot M: TI00437P/00/EN
- Temperature head transmitter iTEMP TMT181: TI00070R/09/EN
- Temperature head transmitter iTEMP HART TMT182: TI00078R/09/EN
- RIA15: TI01043K/09/EN

Operating Instructions

- Waterpilot FMX21 4 to 20 mA Analog: BA01605P/00/EN
- Waterpilot FMX21 4 to 20 mA HART: BA00380P/00/EN
- RIA15: BA01170K/09/EN
- Cable shortening kit: SD00552P/00/A6
- Field Xpert: BA01211S/04/EN

Brief Operating Instructions

- Waterpilot FMX21 4 to 20 mA Analog: KA01244P/00/EN - Brief Operating Instructions for the device
- Waterpilot FMX21 4 to 20 mA HART: KA01189P/00/EN - Brief Operating Instructions for the device

Safety Instructions (XA)

Depending on the approval, the following Safety Instructions (XA) are supplied with the device. They are an integral part of the Operating Instructions.

Directive	Type of protection	Category	Documentation	Option [1]
ATEX	Ex ia IIC	II 2 G	XA00454P	BD
ATEX	Ex nA IIC	II 3 G	XA00485P	BE
IECEx	Ex ia IIC	n/a	XA00455P	IC
CSA C/US	Ex ia IIC	n/a	ZD00232P (960008976)	CE
FM	AEx ia IIC	n/a	ZD00231P (960008975)	FE
NEPSI	Ex ia IIC	n/a	XA00456P	NA
INMETRO	Ex ia IIC	n/a	XA01066P	MA

1) Product Configurator order code for "Approval"

The nameplate indicates the Safety Instructions (XA) that are relevant to the device.

Drinking water approval

- SD00289P/00/A3 (NSF)
- SD00319P/00/A3 (KTW)
- SD00320P/00/A3 (ACS)

Registered trademarks

GORE-TEX® Trademark of W.L. Gore & Associates, Inc., USA.

TEFLON® Trademark of E.I. Du Pont de Nemours & Co., Wilmington, USA.

HART® Registered trademark of the FieldComm Group, Austin, USA

FieldCare®	Trademark of Endress+Hauser Process Solutions AG.
DeviceCare®	Trademark of Endress+Hauser Process Solutions AG.
iTEMP®	Trademark of Endress+Hauser Wetzer GmbH + Co. KG, Nesselwang, D..



www.addresses.endress.com

Endress+Hauser

People for Process Automation

BA00380P/00/EN/18.18
71397579
2018-03-01

Valid as of version
01.00.zz

Operating Instructions
Waterpilot FMX21

Hydrostatic level measurement
4 to 20 mA HART

HART COMMUNICATION PROTOCOL

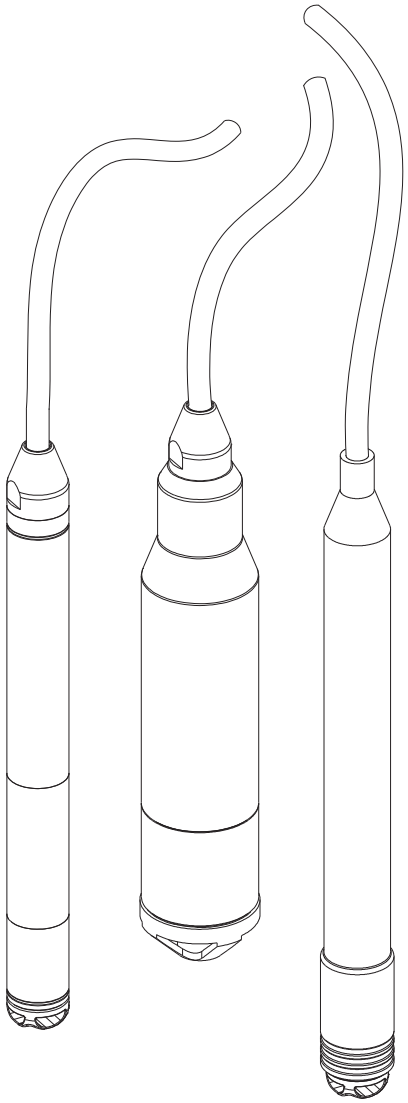

Endress+Hauser
People for Process Automation

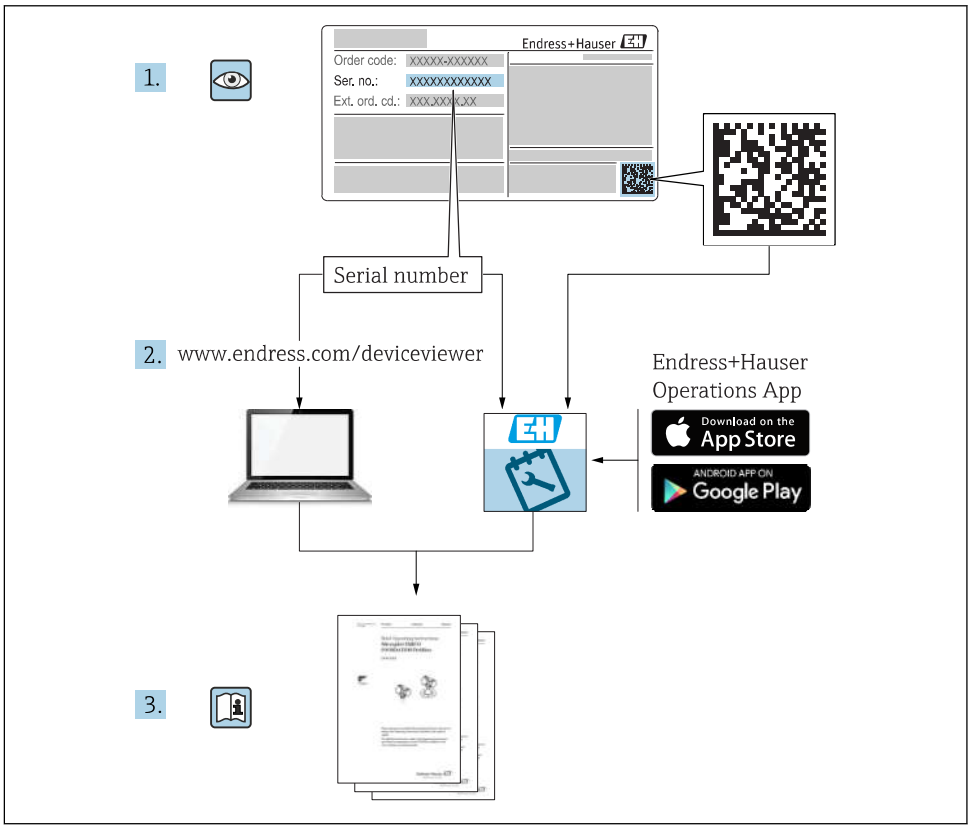

- Make sure the document is stored in a safe place such that it is always available when working on or with the device.
- To avoid danger to individuals or the facility, read the "Basic safety instructions" section carefully, as well as all other safety instructions in the document that are specific to working procedures.
- The manufacturer reserves the right to modify technical data without prior notice. Your Endress+Hauser distributor will supply you with current information and updates to these Instructions.

Table of contents

1 About this document 5
1.1 Document function 5
1.2 Symbols used 5
1.3 Registered trademarks 6
1.4 Supplementary documentation 7
1.5 Terms and abbreviations 8
1.6 Turn down calculation 9

2 Basic safety instructions 10
2.1 Requirements concerning the staff 10
2.2 Designated use 10
2.3 Workplace safety 10
2.4 Operational safety 10
2.5 Product safety 11

3 Product description 12
3.1 Function 12

4 Incoming acceptance and product identification 13
4.1 Incoming acceptance 13
4.2 Product identification 14
4.3 Nameplates 15
4.4 Identification of sensor type 16
4.5 Storage and transport 16
4.6 Scope of delivery 17

5 Installation 18
5.1 Installation conditions 18
5.2 Additional mounting instructions 19
5.3 Dimensions 19
5.4 Mounting the Waterpilot with a mounting clamp 20
5.5 Mounting the Waterpilot with a cable mounting screw 21
5.6 Mounting the terminal box 22
5.7 Mounting the TMT182 temperature head transmitter with terminal box 22
5.8 Mounting the terminal strip for the Pt100 passive (without TMT182) 23
5.9 Inserting the cable into the RIA15 field housing 24
5.10 Cable marking 24
5.11 Cable shortening kit 25
5.12 Post-installation check 25

6 Electrical connection 26
6.1 Connecting the device 26
6.2 Supply voltage 30
6.3 Cable specifications 30
6.4 Power consumption 30
6.5 Current consumption 31
6.6 Connecting the measuring unit 31
6.7 Post-connection check 35

7 Operation options 36
7.1 Overview of operating options 36
7.2 Operating concept 37
7.3 Structure of the operating menu 38
7.4 Locking/unlocking operation 38
7.5 Resetting to factory settings (reset) 39

8 Integrating device via HART® protocol 41
8.1 HART process variables and measured values 41
8.2 Device variables and measured values 42

9 Commissioning 43
9.1 Post-installation check and function check . . . 43
9.2 Unlocking/locking configuration 43
9.3 Commissioning 43
9.4 Measuring mode selection 43
9.5 For selecting the pressure engineering unit . . . 44
9.6 Position adjustment 44
9.7 Configuring the damping 45
9.8 Configuring pressure measurement 46
9.9 Configuring level measurement 48
9.10 Automatic density compensation 59
9.11 Linearization 62
9.12 Manual entry of a linearization table via operating tool 65
9.13 Backing up or duplicating the device data 66
9.14 Operation and settings via RIA15 66

10 Diagnostics and troubleshooting . . . 70
10.1 Troubleshooting 70
10.2 Diagnostic events in the operating tool 70
10.3 Troubleshooting specific to Waterpilot FMX21 with optional Pt100 74
10.4 Troubleshooting specific to TMT182 temperature head transmitter 74
10.5 Response of output to errors 75
10.6 Firmware history 75

11 Maintenance 76
11.1 Exterior cleaning 76

12 Repairs 77
12.1 General notes 77
12.2 Spare parts 77
12.3 Return 77

12.4 Disposal 77

13 Overview of the operating menu 78

13.1 Overview of parameters in the "Expert" menu 81

14 Description of device parameters . . . 86

14.1 Expert → System 86
14.2 Expert → System → Instrument info 87
14.3 Expert → System → Management 89
14.4 Expert → Measurement → Measuring mode . . 89
14.5 Expert → Measurement → Basic setup 90
14.6 Expert → Measurement → Pressure 92
14.7 Expert → Measurement → Level 94
14.8 Expert → Measurement → Linearization 99
14.9 Expert → Measurement → Sensor limits 102
14.10 Expert → Measurement → Sensor trim 103
14.11 Expert → Output → Current output 104
14.12 Expert→ Communication → HART config. . . . 108
14.13 Expert→ Communication → HART info 110
14.14 Expert→ Communication → HART output . . . 112
14.15 Expert→ Communication → HART input 115
14.16 Expert → Application 117
14.17 Expert → Diagnosis 118
14.18 Expert → Diagnosis → Diagnostic list 120
14.19 Expert → Diagnosis→ Event logbook 121
14.20 Expert → Diagnosis → Simulation 122

15 Accessories 124

15.1 Service-specific accessories 125

16 Technical data 126

16.1 Input 126
16.2 Output 129
16.3 Performance characteristics 132
16.4 Environment 134
16.5 Process 136
16.6 Additional technical data 137

Index 138

1 About this document

1.1 Document function

These Operating Instructions contain all the information that is required in various phases of the life cycle of the device: from product identification, incoming acceptance and storage, to mounting, connection, operation and commissioning through to troubleshooting, maintenance and disposal.

1.2 Symbols used

1.2.1 Safety symbols

Symbol	Meaning
DANGER	**DANGER!** This symbol alerts you to a dangerous situation. Failure to avoid this situation will result in serious or fatal injury.
WARNING	**WARNING!** This symbol alerts you to a dangerous situation. Failure to avoid this situation can result in serious or fatal injury.
CAUTION	**CAUTION!** This symbol alerts you to a dangerous situation. Failure to avoid this situation can result in minor or medium injury.
NOTICE	**NOTE!** This symbol contains information on procedures and other facts which do not result in personal injury.

1.2.2 Electrical symbols

Symbol	Meaning	Symbol	Meaning
⎓	Direct current	~	Alternating current
⎓ ~	Direct current and alternating current	⏚	**Ground connection** A grounded terminal which, as far as the operator is concerned, is grounded via a grounding system.
⏚	**Protective ground connection** A terminal which must be connected to ground prior to establishing any other connections.	⏚	**Equipotential connection** A connection that has to be connected to the plant grounding system: This may be a potential equalization line or a star grounding system depending on national or company codes of practice.

1.2.3 Tool symbols

Symbol	Meaning
 A0011220	Flat blade screwdriver
 A0011219	Phillips screwdriver

Symbol	Meaning
 A0011221	Allen key
 A0011222	Open-ended wrench

1.2.4 Symbols for certain types of information

Symbol	Meaning
	**Permitted** Procedures, processes or actions that are permitted.
	**Preferred** Procedures, processes or actions that are preferred.
	**Forbidden** Procedures, processes or actions that are forbidden.
	**Tip** Indicates additional information.
	Reference to documentation
	Reference to page
	Reference to graphic
1. , 2. , 3. …	Series of steps
	Result of a step
	Help in the event of a problem
	Visual inspection

1.2.5 Symbols in graphics

Symbol	Meaning
1, 2, 3 …	Item numbers
1. , 2. , 3. …	Series of steps
A, B, C, …	Views
A-A, B-B, C-C, …	Sections

1.3 Registered trademarks

1.3.1 GORE-TEX®

Trademark of W.L. Gore & Associates, Inc., USA.

1.3.2 TEFLON®

Trademark of E.I. Du Pont de Nemours & Co., Wilmington, USA.

1.3.3 HART®

Registered trademark of the FieldComm Group, Austin, USA

1.3.4 FieldCare®

Trademark of Endress+Hauser Process Solutions AG.

1.3.5 DeviceCare®

Trademark of Endress+Hauser Process Solutions AG.

1.3.6 iTEMP®

Trademark of Endress+Hauser Wetzer GmbH + Co. KG, Nesselwang, D..

1.4 Supplementary documentation

The document types listed are available:
In the Download Area of the Endress+Hauser Internet site: www.endress.com → Download

1.4.1 Technical Information (TI): planning aid for your device

Waterpilot: TI00431P

RIA15: TI01043K

The document contains all the technical data on the device and provides an overview of the accessories and other products that can be ordered for the device.

1.4.2 Brief Operating Instructions (KA): getting the 1st measured value quickly

FMX21 4 to 20 mA HART - KA01189P:

The Brief Operating Instructions contain all the essential information from incoming acceptance to initial commissioning.

1.4.3 Safety Instructions (XA)

Depending on the approval, the following Safety Instructions (XA) are supplied with the device. They are an integral part of the Operating Instructions.

Directive	Type of protection	Category	Documentation	Option [1)]
ATEX	Ex ia IIC	II 2 G	XA00454P	BD
ATEX	Ex nA IIC	II 3 G	XA00485P	BE
IECEx	Ex ia IIC	n/a	XA00455P	IC
CSA C/US	Ex ia IIC	n/a	ZD00232P (960008976)	CE
FM	AEx ia IIC	n/a	ZD00231P (960008975)	FE

Directive	Type of protection	Category	Documentation	Option [1]
NEPSI	Ex ia IIC	n/a	XA00456P	NA
INMETRO	Ex ia IIC	n/a	XA01066P	MA

1) Product Configurator order code for "Approval"

The nameplate indicates the Safety Instructions (XA) that are relevant to the device.

1.5 Terms and abbreviations

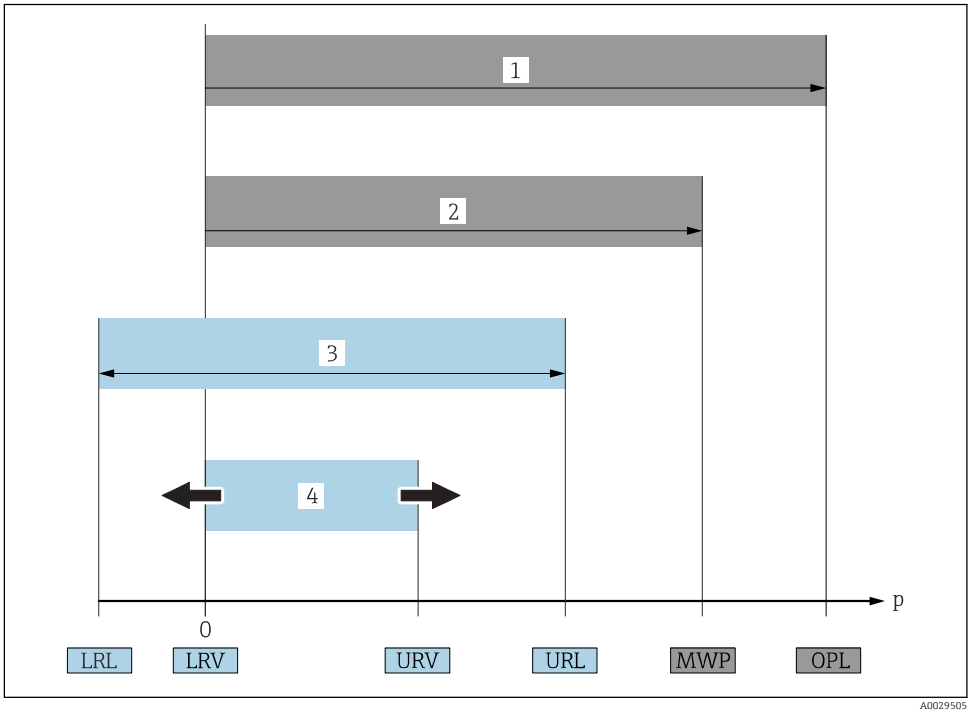

Item	Term/abbreviation	Explanation
1	OPL	The OPL (over pressure limit = sensor overload limit) for the measuring device depends on the lowest-rated element, with regard to pressure, of the selected components, i.e. the process connection has to be taken into consideration in addition to the measuring cell. Also observe pressure-temperature dependency. The OPL may only be applied for a limited period of time.
2	MWP	The MWP (maximum working pressure) for the sensors depends on the lowest-rated element, with regard to pressure, of the selected components, i.e. the process connection has to be taken into consideration in addition to the measuring cell. Also observe pressure-temperature dependency. The MWP may be applied at the device for an unlimited period. The MWP can also be found on the nameplate.
3	Maximum sensor measuring range	Span between LRL and URL This sensor measuring range is equivalent to the maximum calibratable/adjustable span.
4	Calibrated/adjusted span	Span between LRV and URV Factory setting: 0 to URL Other calibrated spans can be ordered as customized spans.
p	-	Pressure
-	LRL	Lower range limit
-	URL	Upper range limit
-	LRV	Lower range value

Item	Term/abbreviation	Explanation
-	URV	Upper range value
-	TD (turn down)	Turn down Example - see the following section.
-	PE	Polyethylene
-	FEP	Fluorinated ethylene propylene
-	PUR	Polyurethane

1.6 Turn down calculation

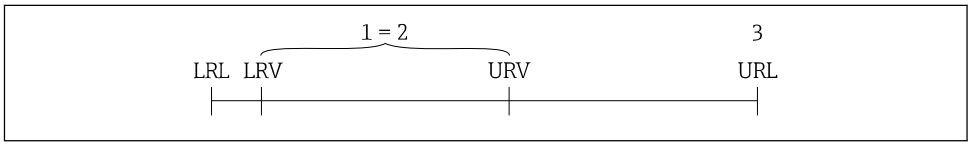

1 Calibrated/adjusted span
2 Zero point-based span
3 URL sensor

Example

- Sensor:10 bar (150 psi)
- Upper range value (URL) = 10 bar (150 psi)

Turn down (TD):

$$TD = \frac{URL}{|URV - LRV|}$$

$$TD = \frac{10\ bar\ (150\ psi)}{|5\ bar\ (75\ psi) - 0\ bar\ (0\ psi)|} = 2$$

In this example, the TD is 2:1.
This span is based on the zero point.

- Calibrated/adjusted span: 0 to 5 bar (0 to 75 psi)
- Lower range value (LRV) = 0 bar (0 psi)
- Upper range value (URV) = 5 bar (75 psi)

2 Basic safety instructions

2.1 Requirements concerning the staff

The personnel for installation, commissioning, diagnostics and maintenance must fulfill the following requirements:
- Trained, qualified specialists: must have a relevant qualification for this specific function and task
- Are authorized by the plant owner/operator
- Are familiar with federal/national regulations
- Before beginning work, the specialist staff must have read and understood the instructions in the Operating Instructions and supplementary documentation as well as in the certificates (depending on the application)
- Following instructions and basic conditions

The operating personnel must fulfill the following requirements:
- Being instructed and authorized according to the requirements of the task by the facility's owner-operator
- Following the instructions in these Operating Instructions

2.2 Designated use

2.2.1 Application and media

The Waterpilot FMX21 is a hydrostatic pressure sensor for measuring the level of fresh water, wastewater and salt water. The temperature is measured simultaneously in the case of sensor versions with a Pt100 resistance thermometer.

An optional temperature head transmitter converts the Pt100 signal to a 4 to 20 mA signal with superimposed digital communication protocol HART 6.0.

2.2.2 Incorrect use

The manufacturer is not liable for damage caused by improper or non-designated use.

Verification for borderline cases:
- For special fluids and fluids for cleaning, Endress+Hauser is glad to provide assistance in verifying the corrosion resistance of fluid-wetted materials, but does not accept any warranty or liability.

2.3 Workplace safety

For work on and with the device:
- Wear the required personal protective equipment according to federal/national regulations.
- Switch off the supply voltage before connecting the device.

2.4 Operational safety

Risk of injury!
- Operate the device in proper technical condition and fail-safe condition only.
- The operator is responsible for interference-free operation of the device.

Modifications to the device

Unauthorized modifications to the device are not permitted and can lead to unforeseeable dangers.
- If, despite this, modifications are required, consult with Endress+Hauser.

Repairs

To ensure continued operational safety and reliability,
- Carry out repairs on the device only if they are expressly permitted.
- Observe federal/national regulations pertaining to repair of an electrical device.
- Use original spare parts and accessories from Endress+Hauser only.

Hazardous area

To eliminate danger to persons or the facility when the device is used in the approval-related area (e.g. explosion protection, pressure vessel safety):
- Check the nameplate to verify if the device ordered can be put to its intended use in the approval-related area.
- Observe the specifications in the separate supplementary documentation that is an integral part of these Instructions.

2.5 Product safety

This measuring device is designed in accordance with good engineering practice to meet state-of-the-art safety requirements, has been tested, and left the factory in a condition in which it is safe to operate.

It meets general safety standards and legal requirements. It also complies with the EC directives listed in the device-specific EC Declaration of Conformity. Endress+Hauser confirms this by affixing the CE mark to the device.

3 Product description

3.1 Function

The ceramic measuring cell is a dry measuring cell i.e. the pressure acts directly on the robust, ceramic process isolating diaphragm of the Waterpilot FMX21. Changes in air pressure are guided via a pressure compensation tube through the extension cable to the rear of the ceramic process isolating diaphragm and are compensated for. A pressure-dependent change in capacitance, caused by the movement of the process isolating diaphragm, is measured at the electrodes of the ceramic carrier. The electronics unit then converts this to a signal that is proportional to the pressure and linear to the level.

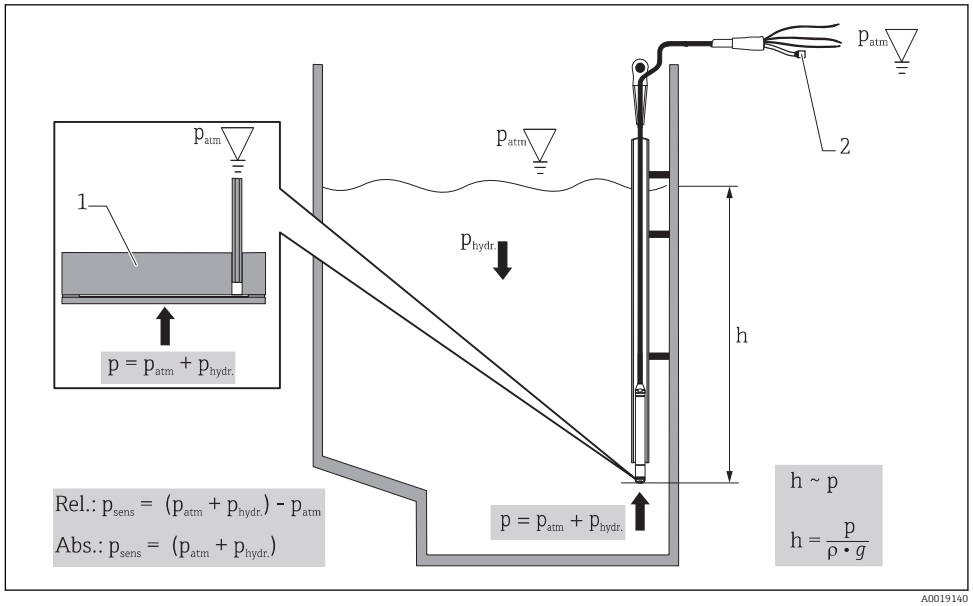

1 Ceramic measuring cell
2 Pressure compensation tube
h Height level
p Total pressure = atmospheric pressure + hydrostatic pressure
ρ Density of the medium
g Acceleration due to gravity
$P_{hydr.}$ *Hydrostatic pressure*
P_{atm} *Atmospheric pressure*
P_{sens} *Pressure displayed on the sensor*

4 Incoming acceptance and product identification

4.1 Incoming acceptance

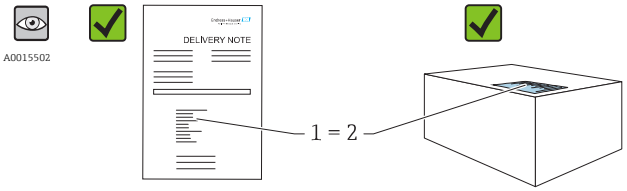

Is the order code on the delivery note (1) identical to the order code on the product sticker (2)?

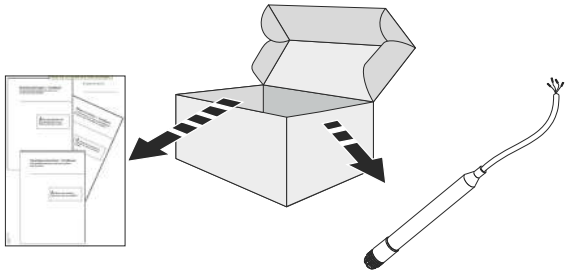

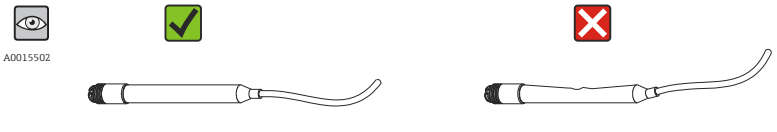

Are the goods undamaged?

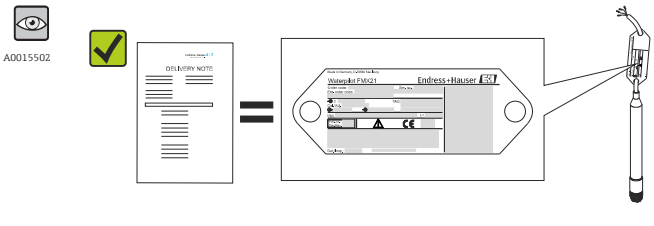

Do the data on the nameplate correspond to the order specifications and the delivery note?



Is the documentation available?
If required (see nameplate): Are the safety instructions (XA) present?

If one of these conditions does not apply, please contact your Endress+Hauser sales office.

4.2 Product identification

The following options are available for identification of the measuring device:
- Nameplate specifications
- Order code with breakdown of the device features on the delivery note
- Enter serial number of nameplates in *W@M Device Viewer* (www.endress.com/deviceviewer): All details on the measuring device are displayed.

For an overview of the technical documentation provided, enter the serial number from the nameplates in the *W@M Device Viewer* (www.endress.com/deviceviewer)

4.2.1 Manufacturer address

Endress+Hauser SE+Co. KG
Hauptstraße 1
79689 Maulburg, Germany

Address of the manufacturing plant: See nameplate.

4.3 Nameplates

4.3.1 Nameplates on extension cable

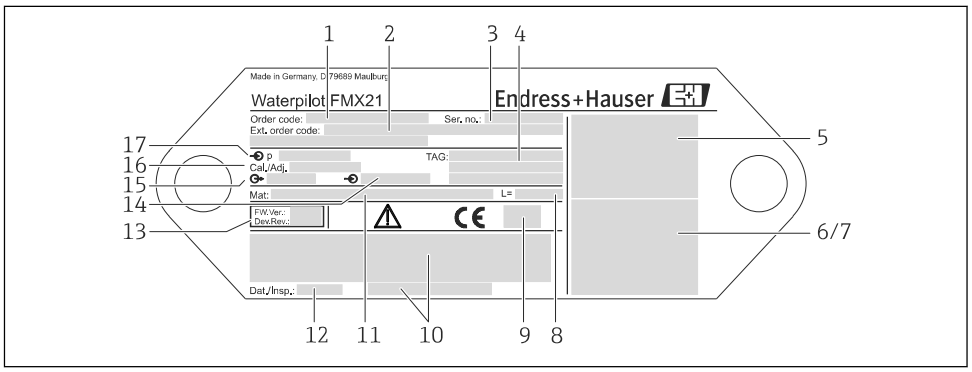

A0018802

1 *Order code (shortened for reordering); The meaning of the individual letters and digits is explained in the order confirmation details.*
2 *Extended order number (complete)*
3 *Serial number (for clear identification)*
4 *TAG (device tag)*
5 *FMX21 connection diagram*
6 *Pt100 connection diagram (optional)*
7 *Warning (hazardous area), (optional)*
8 *Length of extension cable*
9 *Approval symbol, e.g. CSA, FM, ATEX (optional)*
10 *Text for approval (optional)*
11 *Materials in contact with process*
12 *Test date (optional)*
13 *Software version/device version*
14 *Supply voltage*
15 *Output signal*
16 *Set measuring range*
17 *Nominal measuring range*

Additional nameplate for devices with approvals

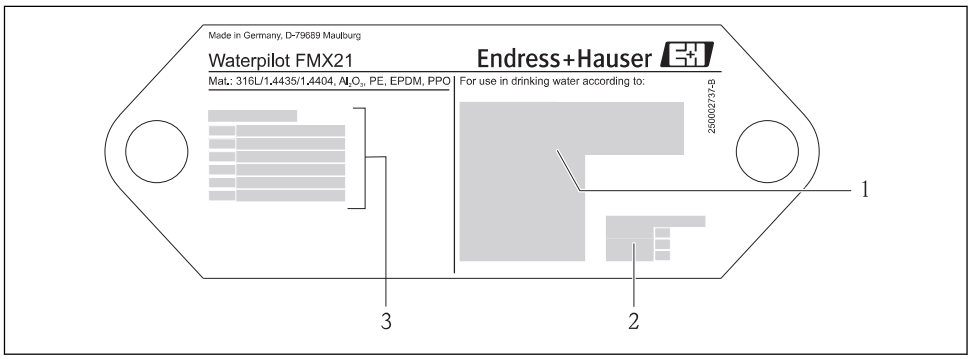

A0018805

1 *Approval symbol (drinking water approval)*
2 *Reference to associated documentation*
3 *Approval number (marine approval)*

4.3.2 Additional nameplate for devices with external diameter 22 mm (0.87 in) and 42 mm (1.65 in)

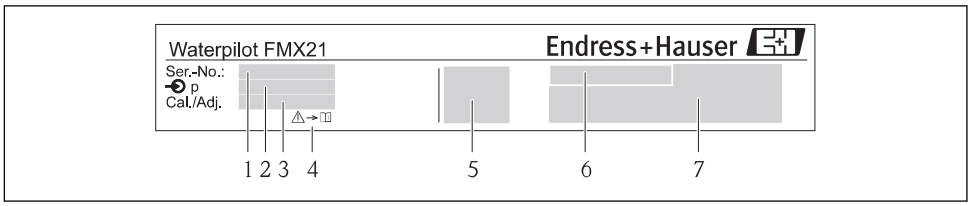

1 *Serial number*
2 *Nominal measuring range*
3 *Set measuring range*
4 *CE mark or approval symbol*
5 *Certificate number (optional)*
6 *Text for approval (optional)*
7 *Reference to documentation*

4.4 Identification of sensor type

With gauge pressure or absolute pressure sensors, the "Pos. zero adjust" parameter is displayed in the operating menu. With absolute pressure sensors, the "Calib. offset" parameter is displayed in the operating menu.

4.5 Storage and transport

4.5.1 Storage conditions

Use original packaging.

Store the measuring device in clean and dry conditions and protect from damage caused by shocks (EN 837-2).

Storage temperature range

FMX21 + Pt100 (optional)

−40 to +80 °C (−40 to +176 °F)

Cable

(when mounted in a fixed position)
- With PE: −30 to +70 °C (−22 to +158 °F)
- With FEP: −30 to +80 °C (−22 to +176 °F)
- With PUR: −40 to +80 °C (−40 to +176 °F)

Terminal box

−40 to +80 °C (−40 to +176 °F)

TMT182 temperature head transmitter (optional) for FMX21 4 to 20 mA HART

−40 to +100 °C (−40 to +212 °F)

4.5.2 Transporting the product to the measuring point

⚠ WARNING

Incorrect transport!

Device or cable may become damaged, and there is a risk of injury!

- ▶ Transport measuring device in the original packaging.
- ▶ Follow the safety instructions and transport conditions for devices weighing more than 18 kg (39.6 lbs).

4.6 Scope of delivery

The scope of delivery comprises:

- Waterpilot FMX21, optionally with integrated Pt100 resistance thermometer
- Optional accessories

Documentation supplied:

- The Operating Instructions BA00380P are available on the internet. → see: www.de.endress.com → Downloads.
- Brief Operating Instructions KA01189P
- Final inspection report
- Drinking water approvals (optional): SD00289P, SD00319P, SD00320P
- Devices that are suitable for use in hazardous areas: Additional documentation e.g. Safety instructions (XA, ZD)

5 Installation

5.1 Installation conditions

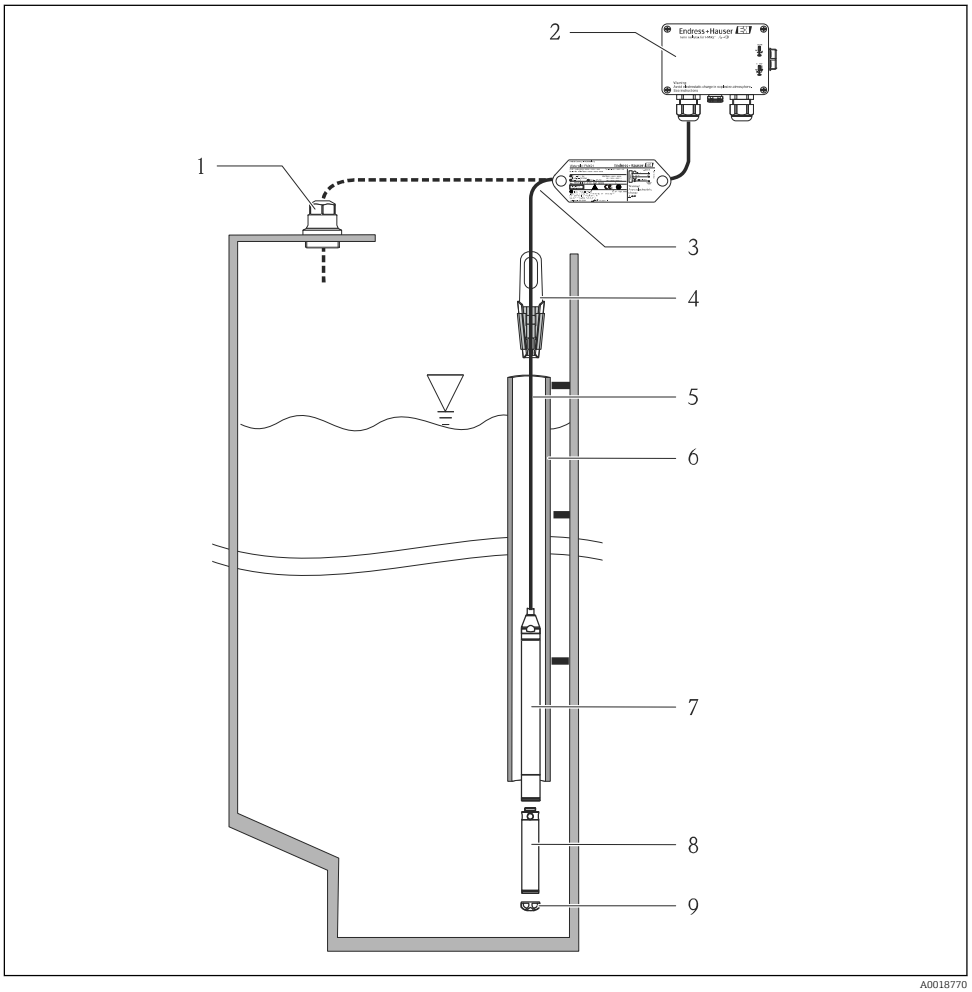

1 *Cable mounting screw (can be ordered as an accessory)*
2 *Terminal box (can be ordered as an accessory)*
3 *Bending radius of extension cable > 120 mm (4.72 in)*
4 *Mounting clamp (can be ordered as an accessory)*
5 *Extension cable*
6 *Guide tube*
7 *Waterpilot FMX21*
8 *Additional weight can be ordered as an accessory for the FMX21 with external diameter of 22 mm (0.87 in) and 29 mm (1.14 in)*
9 *Protection cap*

5.2 Additional mounting instructions

- Cable length
  - Customer-specific in meters or feet.
  - Limited cable length when performing installation with freely suspended device with cable mounting screw or mounting clamp, as well as for FM/CSA approval: max. 300 m (984 ft).
- Sideways movement of the level probe can result in measuring errors. For this reason, install the probe at a point free from flow and turbulence, or use a guide tube. The internal diameter of the guide tube should be at least 1 mm (0.04 in) greater than the external diameter of the selected FMX21.
- To avoid mechanical damage to the measuring cell, the device is equipped with a protection cap.
- The cable must end in a dry room or a suitable terminal box. The terminal box from Endress+Hauser provides humidity and climatic protection and is suitable for installation outdoors → 🖹 124.
- Cable length tolerance: < 5 m (16 ft): ±17.5 mm (0.69 in); > 5 m (16 ft): ±0.2 %
- If the cable is shortened, the filter at the pressure compensation tube must be reattached. Endress+Hauser offers a cable shortening kit for this purpose → 🖹 124 (documentation SD00552P/00/A6).
- Endress+Hauser recommends using twisted, shielded cable.
- In shipbuilding applications, measures are required to restrict the spread of fire along cable looms.
- The length of the extension cable depends on the intended level zero point. The height of the protection cap must be taken into consideration when designing the layout of the measuring point. The level zero point (E) corresponds to the position of the process isolating diaphragm. Level zero point = E; tip of probe = L (see the following diagram).

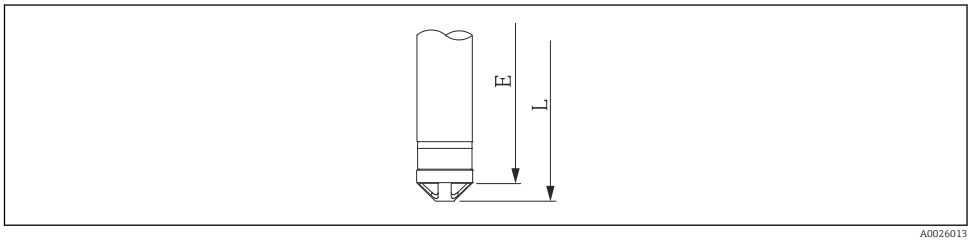

A0026013

5.3 Dimensions

For dimensions, please refer to the Technical Information TI00431P/00/EN, "Mechanical construction" section (see also: www.de.endress.com → Downloads → Media Type: Documentation).

5.4 Mounting the Waterpilot with a mounting clamp

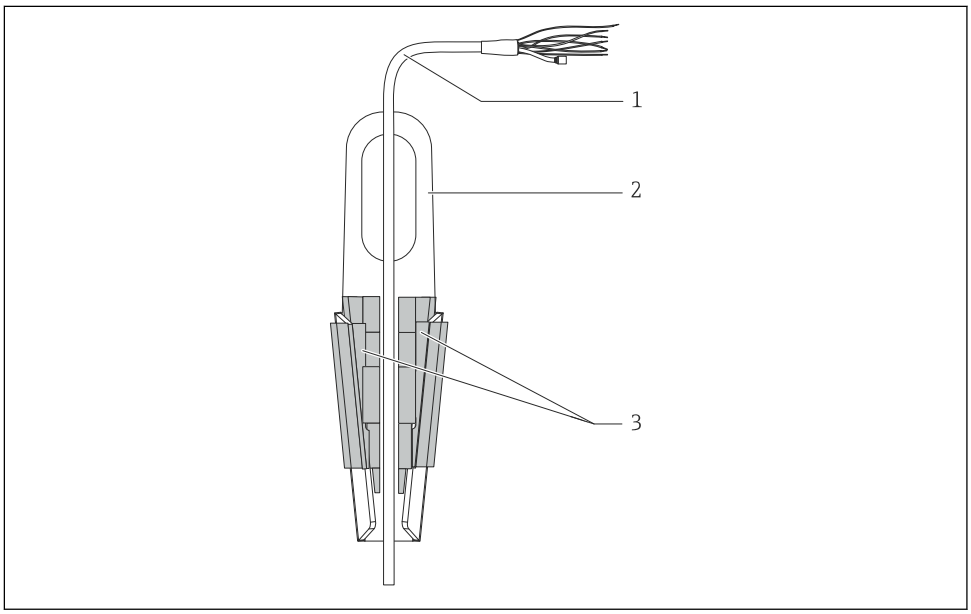

1 Extension cable
2 Suspension clamp
3 Clamping jaws

5.4.1 Mounting the suspension clamp:

1. Mount the suspension clamp (item 2). Take the weight of the extension cable (item 1) and the device into account when selecting the fastening point.
2. Push up the clamping jaws (item 3). Place the extension cable (item 1) between the clamping jaws as shown in the graphic.
3. Hold the extension cable (item 1) in position and push the clamping jaws (item 3) back down. Tap the clamping jaws gently from above to fix them in place.

5.5 Mounting the Waterpilot with a cable mounting screw

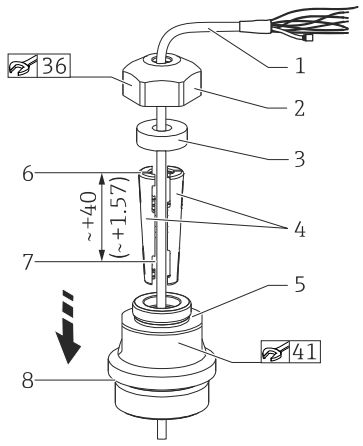

1 *Extension cable*
2 *Cover for cable mounting screw*
3 *Sealing ring*
4 *Clamping sleeves*
5 *Adapter for cable mounting screw*
6 *Top edge of clamping sleeve*
7 *Desired length of extension cable and Waterpilot probe prior to assembly*
8 *After assembly, item 7 is located next to the mounting screw with G 1½" thread: height of sealing surface of the adapter or NPT 1½" thread height of thread run-out of adapter*

Engineering unit mm (in). Illustrated with G 1½" thread.

If you want to lower the level probe to a certain depth, position the top edge of the clamping sleeve 40 mm (4.57 in) higher than the required depth. Then push the extension cable and the clamping sleeve into the adapter as described in Step 6 in the following section.

5.5.1 Mounting the cable mounting screw with a G 1½" or NPT 1½" thread:

1. Mark the desired length of extension cable on the extension cable.
2. Insert the probe through the measuring aperture and carefully lower on the extension cable. Fix the extension cable to prevent it from slipping.
3. Slide the adapter (item 5) over the extension cable and screw it tightly into the measuring aperture.
4. Slide the sealing ring (item 3) and cover (item 2) onto the cable from above. Press the sealing ring into the cover.
5. Place the clamping sleeves (item 4) around the extension cable (item 1) at the marked point as illustrated in the graphic.
6. Slide the extension cable with the clamping sleeves (item 4) into the adapter (item 5)
7. Fit the cover (item 2) with the sealing ring (item 3) onto the adapter (item 5) and securely screw together with the adapter.

To remove the cable mounting screw, perform this sequence of steps in reverse.

⚠ CAUTION

Risk of injury!

▶ Use only in unpressurized vessels.

5.6 Mounting the terminal box

The optional terminal box is mounted using four screws (M4). For the dimensions of the terminal box, please see the Technical Information TI00431P/00/ EN, "Mechanical construction" section (see also: www.de.endress.com → Downloads → Media Type: Documentation).

5.7 Mounting the TMT182 temperature head transmitter with terminal box

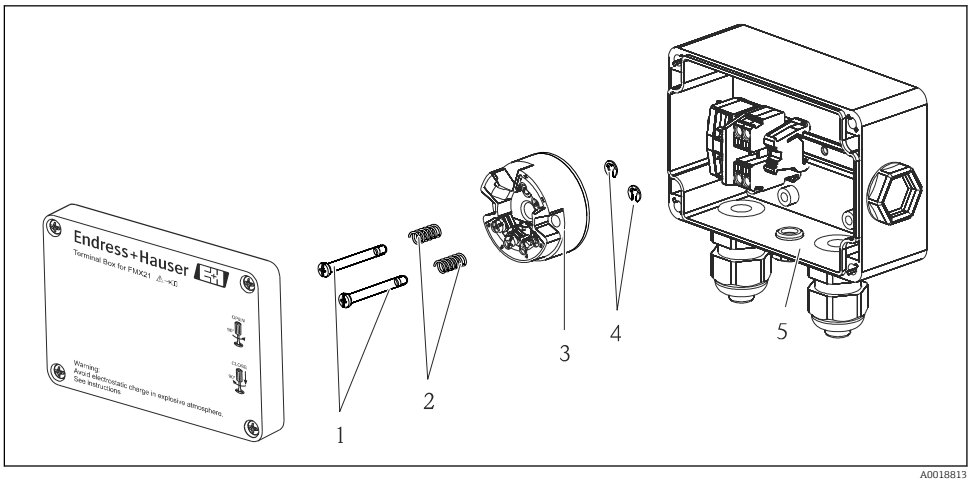

1 *Mounting screws*
2 *Mounting springs*
3 *TMT182 temperature head transmitter*
4 *Circlips*
5 *Terminal box*

Only open the terminal box with a screwdriver.

⚠ WARNING

Risk of explosion!

▶ The TMT182 is not designed for use in hazardous areas.

5.7.1 Mounting the temperature head transmitter:

1. Guide the mounting screws (item 1) with the mounting springs (item 2) through the bore of the temperature head transmitter (item 3)
2. Secure the mounting screws with the circlips (item 4). Circlips, mounting screws and springs are included in the scope of delivery for the temperature head transmitter.
3. Screw the temperature head transmitter into the field housing tightly. (Width of screwdriver blade max. 6 mm (0.24 in))

NOTICE

Avoid damage to the temperature head transmitter.

▶ Do not overtighten the mounting screw.

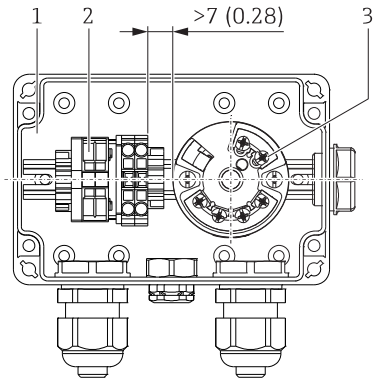

1 Terminal box
2 Terminal strip
3 TMT182 temperature head transmitter

Engineering unit mm (in)

NOTICE

Incorrect connection!

- A distance of >7 mm (> 0.28) must be maintained between the terminal strip and the TMT182 temperature head transmitter.

5.8 Mounting the terminal strip for the Pt100 passive (without TMT182)

If the FMX21 with optional Pt100 is supplied without the optional TMT182 temperature head transmitter, a terminal strip is provided with the terminal box for the purpose of wiring the Pt100.

⚠ WARNING

Risk of explosion!

- The Pt100, as well as the terminal strip, are not designed for use in hazardous areas.

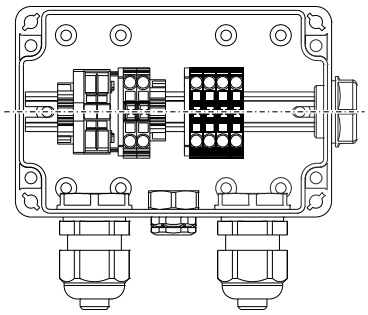

5.9 Inserting the cable into the RIA15 field housing

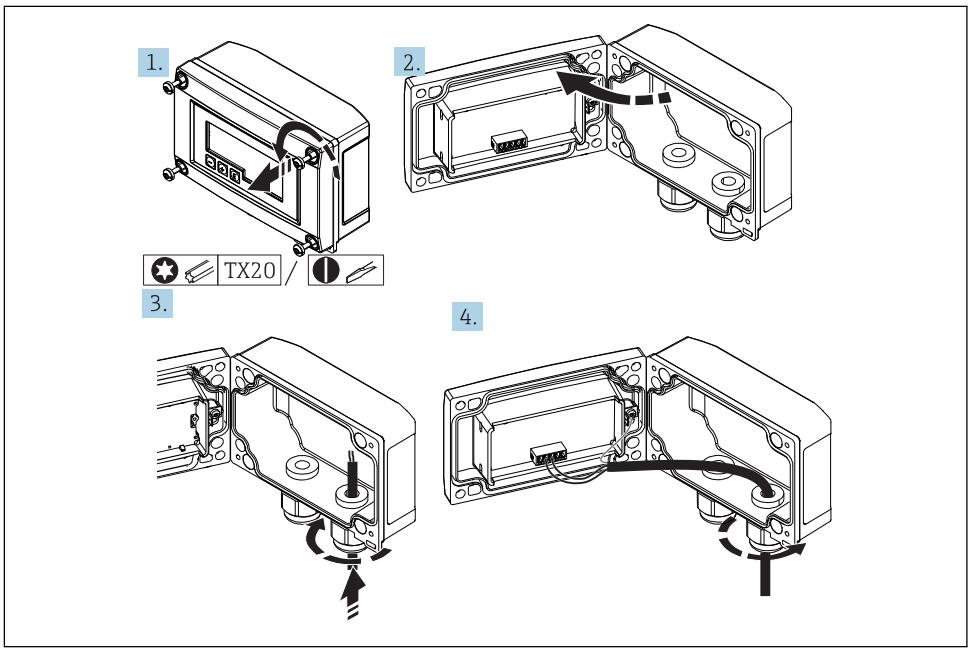

A0017830

Inserting the cable, field housing, connection without transmitter power supply (example)

1. Release the housing screws
2. Open the housing
3. Open the cable gland (M16) and insert the cable
4. Connect the cable including the functional grounding and close the cable gland

Compensation of the atmospheric pressure must be ensured for the installation. A black, vented cable gland is supplied for this purpose.

If using the communication resistor module in the RIA15, the cable of the FMX21 must be inserted into the right gland when connecting the FMX21 so that the integrated pressure compensation tube is not pinched.

5.10 Cable marking

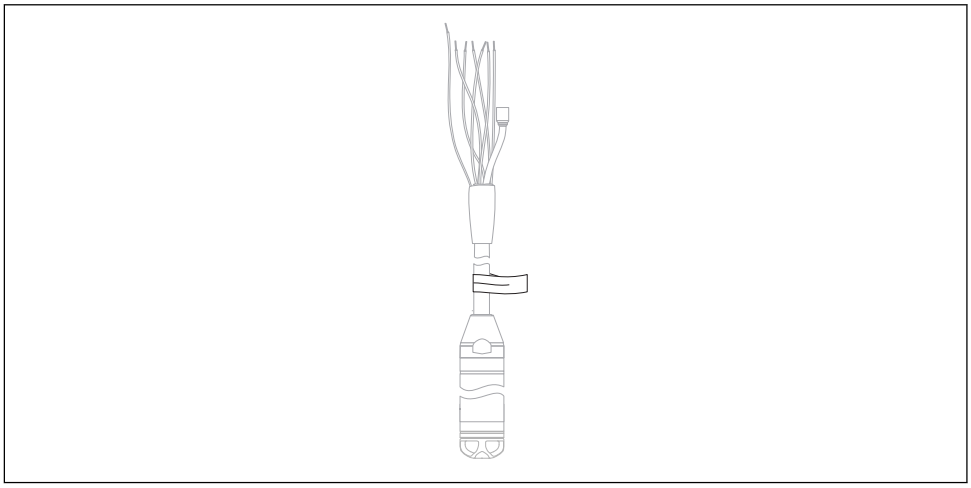

A0030955

- To make installation easier, Endress+Hauser marks the extension cable if a customer-specific length has been ordered.
  Ordering information: Product Configurator order code for "Service", option "IR" or "IS".
- Cable marking tolerance (distance to lower end of level probe):
  Cable length < 5 m (16 ft): ±17.5 mm (0.69 in)
  Cable length > 5 m (16 ft): ±0.2 %
- Material: PET, stick-on label: acrylic
- Immunity to temperature change: −30 to +100 °C (−22 to +212 °F)

NOTICE

The marking is used exclusively for installation purposes.

▶ The mark must be thoroughly removed without trace in the case of devices with drinking water approval. The extension cable must not be damaged in the process.

Not for use of the FMX21 in hazardous areas.

5.11 Cable shortening kit

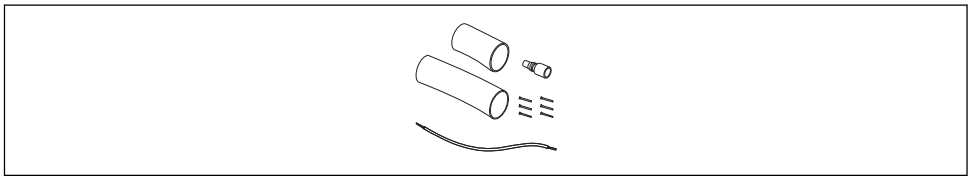

A0030948

The cable shortening kit is used to shorten a cable easily and professionally.

The cable shortening kit is not designed for the FMX21 with FM/CSA approval.

- Ordering information: Product Configurator order code for "Accessories enclosed", option "PW"
- Associated documentation SD00552P/00/A6.

5.12 Post-installation check

❑	Is the device undamaged (visual inspection)?
❑	Does the device conform to the measuring point specifications? For example: ▪ Process temperature ▪ Process pressure ▪ Ambient temperature ▪ Measuring range
❑	Are the measuring point identification and labeling correct (visual inspection)?
❑	Check that all screws are firmly seated.

6 Electrical connection

WARNING

Electrical safety is compromised by an incorrect connection!

- When using the measuring device in a hazardous area, the relevant national standards and guidelines as well as the Safety Instructions (XAs) or installation or control drawings (ZDs) must be adhered to. All data relating to explosion protection can be found in separate documentation which is available on request. This documentation is supplied with the devices as standard → 7

6.1 Connecting the device

WARNING

Electrical safety is compromised by an incorrect connection!

- The supply voltage must match the supply voltage specified on the nameplate → 15
- Switch off the supply voltage before connecting the device.
- The cable must end in a dry room or a suitable terminal box. The IP66/IP67 terminal box with GORE-TEX® filter from Endress+Hauser is suitable for outdoor installation.→ 22
- Connect the device in accordance with the following diagrams. Reverse polarity protection is integrated in the Waterpilot FMX21 and the temperature head transmitter. Changing the polarities will not result in the destruction of the devices.
- A suitable circuit breaker should be provided for the device in accordance with IEC/EN 61010.

6.1.1 Waterpilot with Pt100

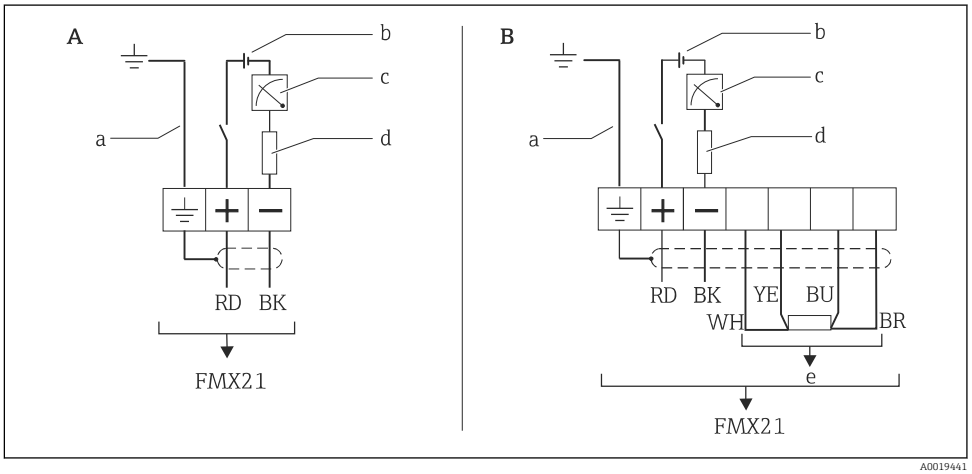

A Waterpilot FMX21
B Waterpilot FMX21 with Pt100 (not for use in hazardous areas); option "NB", Product Configurator order code for "Accessories"
a Not for the FMX21 with external diameter of 29 mm (1.14 in)
b 10.5 to 30 V DC (hazardous area), 10.5 to 35 V DC
c 4...20 mA
d Resistance (R_L)
e Pt100

6.1.2 Waterpilot with Pt100 and TMT182 temperature head transmitter for FMX21 4 to 20 mA HART

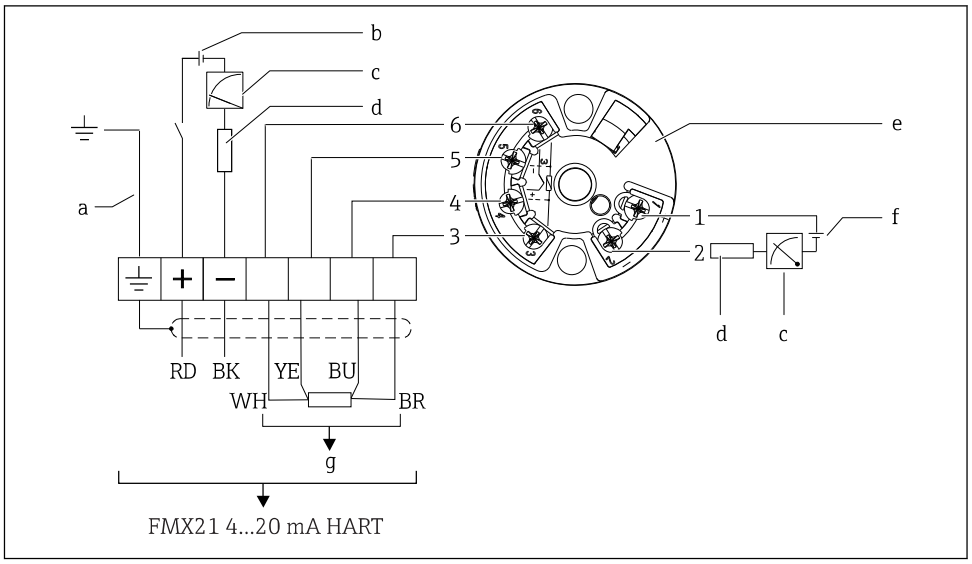

a Not for the FMX21 with external diameter of 29 mm (1.14 in)
b 10.5 to 35 V DC
c 4...20 mA
d Resistance (R_L)
e TMT182 temperature head transmitter (4 to 20 mA) (not for use in hazardous areas)
f 11.5 to 35 V DC
g Pt100
1...6 Pin assignment

Ordering information:

Pt100: Product Configurator order code for "Accessories mounted", option "NB"

TMT182: Product Configurator order code for "Accessories enclosed", option "PT"

6.1.3 Waterpilot FMX21 with RIA15

The RIA15 remote display can be ordered together with the device.

Product structure, feature 620 "Accessory enclosed":
- Option R4 "Remote display RIA15 non-hazardous area, field housing"
- Option R5 "Remote display RIA15 Ex= explosion protection approval, field housing"

Compensation of the atmospheric pressure must be ensured for the installation. A black, vented cable gland is supplied for this purpose.

The RIA15 process display unit is loop-powered and does not require any external power supply.

The voltage drop to be taken into account is:
- ≤1 V in the standard version with 4 to 20 mA communication
- ≤1.9 V with HART communication
- and an additional 2.9 V if display light is used

	Circuit diagram / Description
Waterpilot FMX21 connection, HART communication and RIA15 **without** backlight	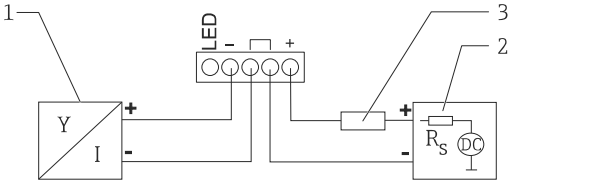 *1 Waterpilot FMX21 block diagram, HART with RIA15 process display unit without light* *1 Waterpilot FMX21* *2 Power supply* *3 HART resistance*
Waterpilot FMX21 connection, HART communication and RIA15 **with** backlight	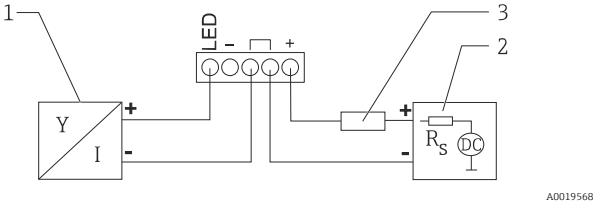 *2 Waterpilot FMX21 block diagram, HART with RIA15 process display unit with light* *1 Waterpilot FMX21* *2 Power supply* *3 HART resistance*

6.1.4 Waterpilot FMX21, RIA15 with installed HART communication resistor module

The HART communication module for installation in the RIA15 can be ordered together with the device.

Product structure, feature 620 "Accessory enclosed":
- Option R6 "HART communication resistor hazardous / non-hazardous area"
- The **voltage drop** to be taken into account is max. **7 V**

Compensation of the atmospheric pressure must be ensured for the installation. A black, vented cable gland is supplied for this purpose.

	Circuit diagram / Description
Waterpilot FMX21 connection and RIA15 **without** backlight	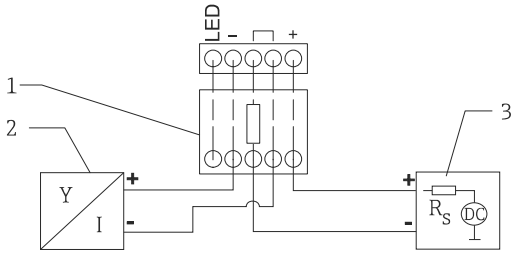 3 *Waterpilot FMX21 block diagram, RIA15 without light, HART communication resistor module* *1 HART communication resistor module* *2 Waterpilot FMX21* *3 Power supply*
Waterpilot FMX21 connection and RIA15 **with** backlight	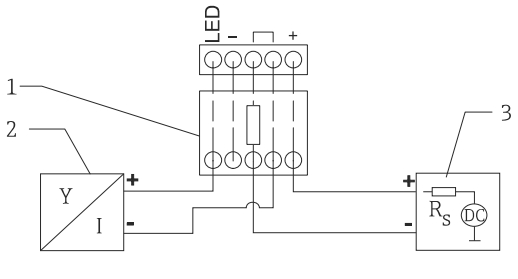 4 *Waterpilot FMX21 block diagram, RIA15 with light, HART communication resistor module* *1 HART communication resistor module* *2 Waterpilot FMX21* *3 Power supply*

6.1.5 Wire colors

RD = red, BK = black, WH = white, YE = yellow, BU = blue, BR = brown

6.1.6 Connection data

Connection classification as per IEC 61010-1:
- Overvoltage category 1
- Pollution level 1

Connection data in the hazardous area

See relevant XA.

6.2 Supply voltage

WARNING

Supply voltage might be connected!
Risk of electric shock and/or explosion!

- When using the measuring device in hazardous areas, installation must comply with the corresponding national standards and regulations as well as the Safety Instructions.
- All explosion protection data are given in separate documentation which is available upon request. The Ex documentation is supplied as standard with all devices approved for use in explosion hazardous areas.

6.2.1 FMX21 + Pt100 (optional)

- 10.5 to 35 V (not hazardous areas)
- 10.5 to 30 V (hazardous areas)

6.2.2 TMT182 temperature head transmitter (optional) for FMX21 4 to 20 mA HART

11.5 to 35 V DC

6.3 Cable specifications

Endress+Hauser recommends using shielded, twisted-pair two-wire cables.

The probe cables are shielded for device versions with outer diameters of 22 mm (0.87 in) and 42 mm (1.65 in).

6.3.1 FMX21 + Pt100 (optional)

- Commercially available instrument cable
- Terminals, terminal box: 0.08 to 2.5 mm^2 (28 to 14 AWG)

6.3.2 TMT182 temperature head transmitter (optional) for FMX21 4 to 20 mA HART

- Commercially available instrument cable
- Terminals, terminal box: 0.08 to 2.5 mm^2 (28 to 14 AWG)
- Transmitter connection: max. 1.75 mm^2 (15 AWG)

6.4 Power consumption

6.4.1 FMX21 + Pt100 (optional)

- ≤ 0.805 W at 35 V DC (non-hazardous area)
- ≤ 0.690 W at 30 V DC (hazardous area)

6.4.2 TMT182 temperature head transmitter (optional) for FMX21 4 to 20 mA HART

≤ 0.805 W at 35 V DC

6.5 Current consumption

6.5.1 FMX21 + Pt100 (optional)

Max. current consumption: ≤ 23 mA
Min. current consumption: ≥ 3.6 mA

6.5.2 TMT182 temperature head transmitter (optional) for FMX21 4 to 20 mA HART

- Max. current consumption: ≤ 23 mA
- Min. current consumption: ≥ 3.5 mA

6.6 Connecting the measuring unit

6.6.1 Overvoltage protection

To protect the Waterpilot and the TMT182 temperature head transmitter from large interference voltage peaks, Endress+Hauser recommends installing overvoltage protection upstream and downstream of the display and/or evaluation unit as shown in the graphic.

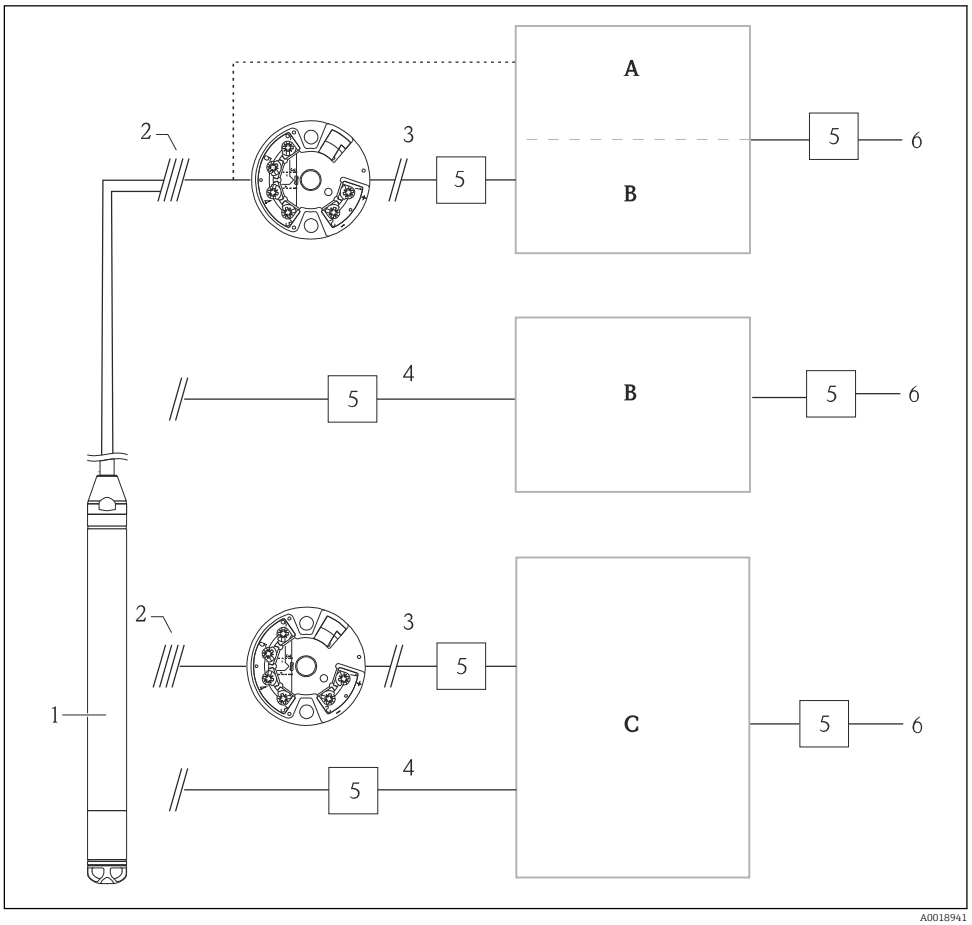

A Power supply, display and evaluation unit with one input for Pt100
B Power supply, display and evaluation unit with one input for 4 to 20 mA
C Power supply, display and evaluation unit with two inputs for 4 to 20 mA
1 Waterpilot FMX21 HART
2 Connection for integrated Pt100 in the FMX21
3 4 to 20 mA HART (temperature)
4 4 to 20 mA HART (level)
5 Overvoltage protection, e.g. HAW from Endress+Hauser (not for use in hazardous areas.)
6 Power supply

Further information on the TMT182 temperature head transmitter for HART applications from Endress+Hauser can be found in the Technical Information TI00078R/09/EN.

6.6.2 Connecting the Commubox FXA195

The Commubox FXA195 connects transmitters with the HART protocol to the USB interface of a computer. This enables remote operation of the transmitter using the Endress+Hauser operating program FieldCare/DeviceCare. Power is supplied to the Commubox via the USB port. The Commubox is also suitable for connecting to intrinsically safe circuits. For further information, see the Technical Information TI00404F/00/EN.

6.6.3 Connecting the Field Xpert SFX

Compact, flexible and robust industrial handheld terminal for remote configuration and for obtaining measured values via the HART current output (4 to 20 mA). For details, see Operating Instructions BA00060S/04/EN.

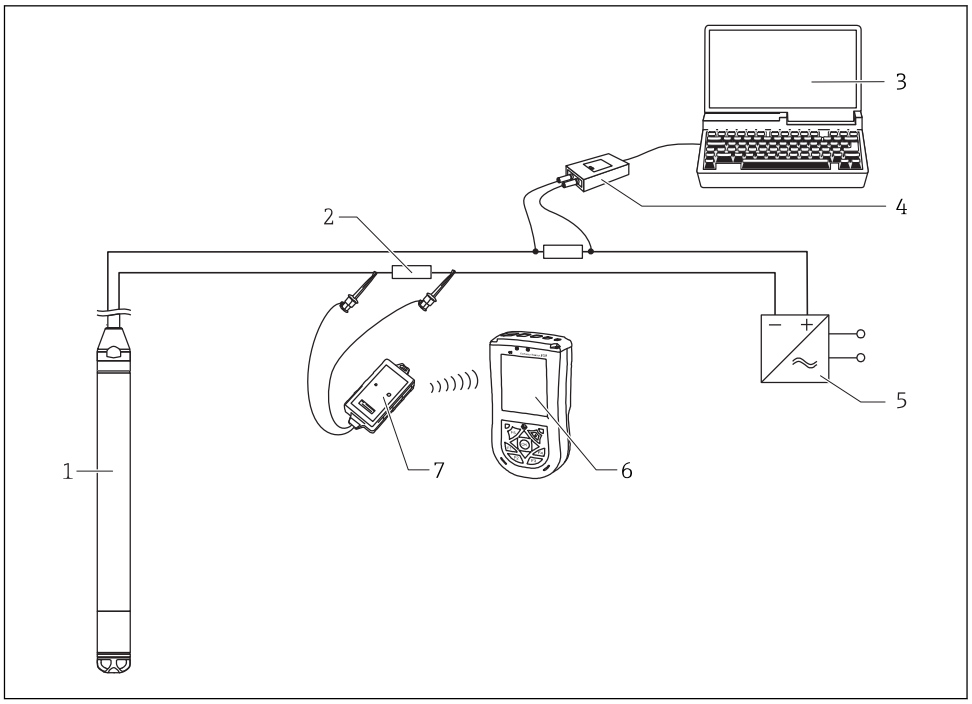

1 *Waterpilot FMX21*
2 *Required communication resistor ≥ 250 Ω*
3 *Computer with operating tool (e.g. FieldCare)*
4 *Commubox FXA195 (USB)*
5 *Transmitter power supply unit, e.g. RN221N (with communication resistor)*
6 *Field Xpert SFX*
7 *VIATOR Bluetooth modem with connecting cable*

Only use certified operating devices in hazardous area!

WARNING

Risk of explosion!

- Do not change the battery of the handheld terminal in the hazardous area.
- When using the measuring device in hazardous areas, installation must comply with the corresponding national standards and regulations and the Safety Instructions (XAs) or the Installation or Control Drawings (ZDs).

6.6.4 Connecting for air pressure compensation with external measured value

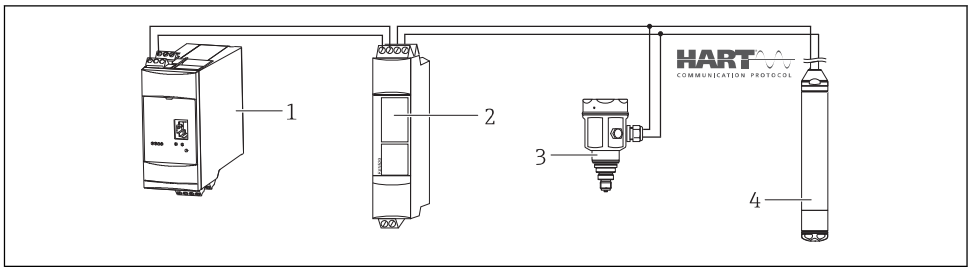

1 *Fieldgate FXA520*
2 *Multidrop Connector FXN520*
3 *Cerabar*
4 *Waterpilot FMX21*

For applications in which condensation may occur, the use of an absolute pressure probe is recommended. For level measurement using an absolute pressure probe, the measured value is affected by fluctuations in the ambient air pressure. To correct the resulting measured error, you can connect an external absolute pressure sensor (e.g. Cerabar) to the HART signal line, switch the Waterpilot to burst mode and operate the Cerabar in the "Electr. Delta P" mode.

When you switch on the "Electr. Delta P" application, the external absolute pressure sensor calculates the difference between the two pressure signals and can thus determine the level precisely. Only one level measured value can be corrected in this way.

For additional information, see → 57.

If using intrinsically safe devices, the regulations which apply to interconnecting intrinsically safe circuits as outlined in IEC 60079-14 (proof of intrinsic safety) must be observed.

6.6.5 Connecting an external temperature sensor/temperature head transmitter for density compensation

The Waterpilot FMX21 can correct measured errors that result from fluctuations in the density of the water caused by temperature. Users can choose from the following options:

Use the internally measured sensor temperature of the FMX21

The internally measured sensor temperature is calculated in the Waterpilot FMX21 for density compensation. The level signal is thus corrected according to the density characteristic line of water.

Use the optional internal Pt100 temperature sensor for density compensation in a suitable HART master (e.g. PLC)

The Waterpilot FMX21 is available with an optional Pt100 temperature sensor. Endress +Hauser additionally offers the TMT182 temperature head transmitter to convert the Pt100 signal to a 4 to 20 mA HART signal. The temperature and pressure signal is queried by a HART master (e.g. PLC), where a corrected level value can be generated using a stored linearization table or density function (of a chosen medium).

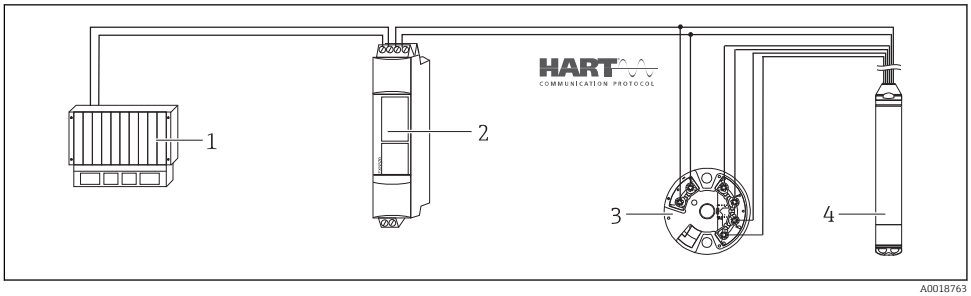

A0018763

1 *HART master, e.g. PLC (programmable logic controller)*
2 *Multidrop Connector FXN520*
3 *TMT182 temperature head transmitter*
4 *Waterpilot FMX21*

Use an external temperature signal which is transmitted to the FMX21 via HART burst mode

The Waterpilot FMX21 is available with an optional Pt100 temperature sensor. With this option, the signal of the Pt100 is evaluated with a HART-compliant temperature head transmitter (min. HART 5.0) that supports the burst mode. The temperature signal can

thus be transmitted to the FMX21. The FMX21 uses this signal for density correction of the level signal.

The TMT182 temperature head transmitter is not suitable for this configuration.

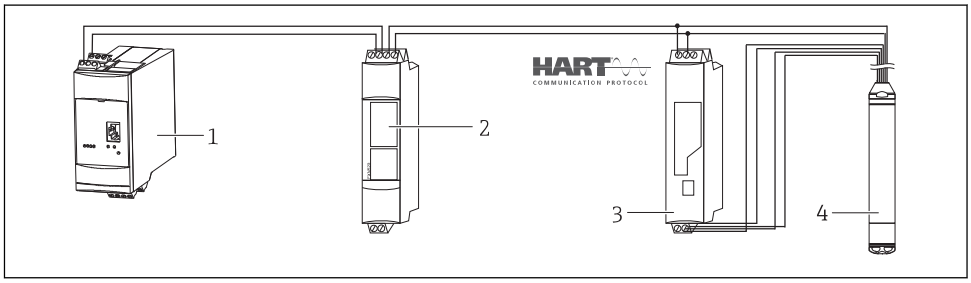

1 Fieldgate FXA520
2 Multidrop Connector FXN520
3 HART-compatible temperature transmitter (e.g. TMT82)
4 Waterpilot FMX21

Without additional compensation due to the anomaly of water, errors of up to 4% may occur at a temperature of +70 °C (+158 °F), for example. With density compensation, this error can be decreased to 0.5 % in the entire temperature range from 0 to +70 °C (+32 to +158 °F).

For additional information, see → 59.

For further information on the devices, please refer to the relevant Technical Information:
- TI01010T: TMT82 temperature transmitter (4 to 20 mA HART)
- TI00369F: Fieldgate FXA520
- TI00400F: Multidrop Connector FXN520

6.7 Post-connection check

❑	Is the device or cable undamaged (visual check)?
❑	Do the cables comply with the requirements ?
❑	Do the cables have adequate strain relief?
❑	Are all cable glands installed, securely tightened and leak-tight?
❑	Does the supply voltage match the specifications on the nameplate?
❑	Is the terminal assignment correct ?

7 Operation options

Endress+Hauser offers comprehensive measuring point solutions with display and/or evaluation units for the Waterpilot FMX21 HART and TMT182 temperature head transmitter.

Your Endress+Hauser service organization would be glad to be of service if you have any other questions. Contact addresses can be found on the website at www.endress.com/worldwide

7.1 Overview of operating options

7.1.1 Operation using Endress+Hauser operating program

FieldCare

The FieldCare operating program is an Endress+Hauser asset management tool based on FDT technology. With FieldCare, you can configure all Endress+Hauser devices as well as devices from other manufacturers that support the FDT standard.

Hardware and software requirements can be found on the Internet:

www.de.endress.com → Search: FieldCare → FieldCare → Technical data.

FieldCare supports the following functions:
- Configuration of transmitters in online/offline mode
- Loading and saving device data (upload/download)
- Documentation of the measuring point

Connection options:
- HART via Commubox FXA195 and USB interface of a computer
- HART via Fieldgate FXA520

- Further information on FieldCare and software download can be found on the internet (www.de.endress.com ® Downloads ® Text Search: FieldCare).
- Connecting the Commubox FXA195
- As not all internal device dependencies can be mapped in offline operation, the consistency of the parameters must be checked once again before they are transmitted to the device.

DeviceCare

Function scope

Tool for connecting and configuring Endress+Hauser field devices.

The fastest way to configure Endress+Hauser field devices is with the dedicated "DeviceCare" tool. Together with the device type managers (DTMs) it presents a convenient, comprehensive solution.

For details, see Innovation brochure IN01047S

7.1.2 Operation via Field Xpert SFX

Compact, flexible and robust industrial handheld terminal for remote configuration and for obtaining measured values via the HART current output or FOUNDATION Fieldbus. For details, see the Operating Instructions BA00060S/04.

7.1.3 Operation via RIA15

The RIA15 can be used as a local display unit and for the basic configuration of the Waterpilot FMX21 hydrostatic level sensor via HART.

The following parameters can be configured on the FMX21 using the 3 operating keys on the front of the RIA15:
- Pressure engineering unit, level, temperature
- Zero adjustment (only for gauge pressure sensors)
- Empty and full pressure adjustment
- Empty and full level adjustment
- Reset to factory defaults

Further information on the operating parameters → 67

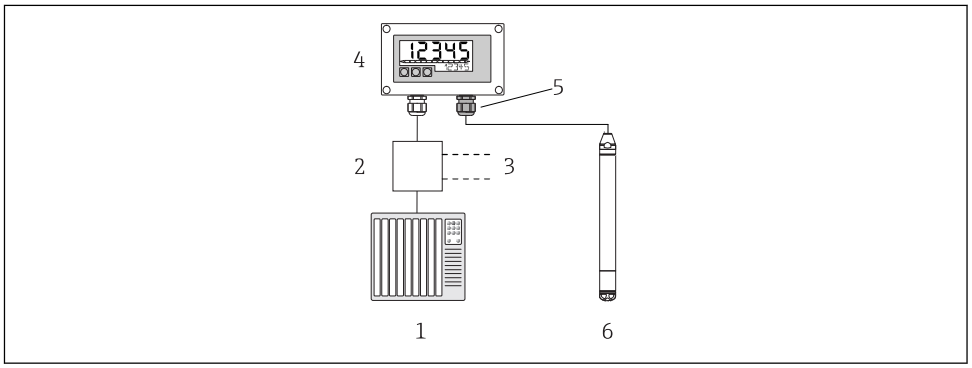

5 Remote operation of the Waterpilot FMX21 via the RIA15

1 PLC
2 Transmitter power supply, e.g. RN221N (with communication resistor)
3 Connection for Commubox FXA195 and Field Communicator 375, 475
4 RIA15 loop-powered process display unit
5 Cable gland M16 with pressure compensation membrane
6 Waterpilot FMX21

7.2 Operating concept

Operation with an operating menu is based on an operation concept with "user roles" .

User role	Meaning
Operator	Operators are responsible for the devices during normal "operation". This is usually limited to the reading of process values. If the work with the devices goes beyond reading, it concerns simple, application-specific functions that are used in operation. Should an error occur, these users simple forward the information on the errors but do not intervene themselves.
Maintenance	Service engineers usually work with the devices in the phases following device commissioning. They are primarily involved in maintenance and troubleshooting activities for which simple settings have to be made at the device. Technicians work with the devices over the entire life cycle of the product. Thus, commissioning and advanced settings and configurations are some of the tasks they have to carry out.
Expert	Experts work with the devices over the entire life cycle of the device, but, in part, have high requirements on the devices. Individual parameters/functions from the overall functionality of the devices are required for this purpose time and again. In addition to technical, process-oriented tasks, experts can also perform administrative tasks (e.g. user administration). "Experts" can avail of the entire parameter set.

7.3 Structure of the operating menu

User role	Submenu	Meaning/use
Operator	Display/ operat.	Contains parameters that are needed to configure the measured value display (selecting the values displayed, display format, etc.). With this submenu, users can change the measured value display without affecting the actual measurement.
Maintenance	setup	Contains all the parameters that are needed to commission measuring operations. This submenu has the following structure: ▪ **Standard setup parameters** A wide range of parameters, which can be used to configure a typical application, is available at the start. The measuring mode selected determines which parameters are available. After making settings for all these parameters, the measuring operation should be completely configured in the majority of cases. ▪ **"Extended setup" submenu** The "Extended setup" submenu contains additional parameters for more in-depth configuration of the measurement operation, for conversion of the measured value and for scaling the output signal. This menu is split into additional submenus depending on the measuring mode selected.
Maintenance	Diagnosis	Contains all the parameters that are needed to detect and analyze operating errors. This submenu has the following structure: ▪ **Diagnostic list** contains up to 10 currently pending error messages. ▪ **Event logbook** contains the last 10 error messages (no longer pending). ▪ **Instrument info** contains information for identifying the device. ▪ **Measured values** contains all current measured values. ▪ **Simulation** Is used to simulate pressure, level, current and alarm/warning. ▪ **Enter reset code**
Expert	Expert	Contains all the parameters of the device (including those already in one of the submenus). The "Expert" submenu is structured by the function blocks of the device. It thus contains the following submenus: ▪ **System** contains all device parameters that do not affect either measurement or integration into a distributed control system. ▪ **Measurement** contains all parameters for configuring the measurement. ▪ **Output** contains all parameters for configuring the current output. ▪ **Communication** contains all parameters for configuring the HART interface. ▪ **Diagnosis** contains all parameters required to detect and analyze operating errors.

7.4 Locking/unlocking operation

Once you have entered all the parameters, you can lock your entries against unauthorized and undesired access.

The "Operator code" parameter is used to lock/unlock the device.

Operator code

Navigation Setup → Extended setup → Operator code

Read permission Operator/Service engineers/Expert

Write permission Operator/Service engineers/Expert

Description Use this function to enter a code to lock or unlock operation.

User entry
- To lock: Enter a number ≠ the release code (value range: 1 to 65535).
- To unlock: Enter the release code.

Factory setting 0

Note The release code is "0" in the order configuration. Another release code can be defined in the "Code definition" parameter. If the user has forgotten the release code, the release code can be visible by entering the number "5864".

The release code is defined in the "Code definition" parameter.

Code definition

Navigation Setup → Extended setup → Code definition

Read permission Operator/Service engineers/Expert

Write permission Operator/Service engineers/Expert

Description Use this function to enter a release code with which the device can be unlocked.

User entry A number from 0 to 9999

Factory setting 0

Note The device setup can also be disabled on the RIA15 via a 4-digit user code.
Additional information is available in the RIA15 Operating Instructions BA01170K.

7.5 Resetting to factory settings (reset)

By entering a certain code, you can completely or partially reset the entries for the parameters to the factory settings [1]. Enter the code via the "Enter reset code" parameter (menu path: "Diagnosis" → "Enter reset code").

There are various reset codes for the device. The following table illustrates which parameters are reset by the particular reset codes. To perform a reset, operation must be unlocked (see the "Locking/unlocking operation" section).→ 38

Any customer-specific configuration carried out at the factory is not affected by a reset (customer-specific configuration remains). If you want to change the customer-specific configuration carried out at the factory, please contact Endress+Hauser Service. As there is no separate service level, the order code and serial number can be changed without a specific release code.

1) . The factory setting for the individual parameters is specified in the parameter description

Reset code [1]	Description and effect
62	**PowerUp reset (warm start)** ▪ The device is restarted. ▪ Data is read back anew from the EEPROM (process is reinitialized). ▪ Any simulation which may be running is ended.
333	**User reset** ▪ This code resets all the parameters apart from: - Device tag - Linearization table - Operating hours - Event logbook - Curr. trim 4 mA - Curr. trim 20 mA ▪ Any simulation which may be running is ended. ▪ The device is restarted.
7864	**Total reset** ▪ This code resets all the parameters apart from: - Operating hours - Event logbook ▪ Any simulation which may be running is ended. ▪ The device is restarted.

1) To be entered in "System" → "Management" → "Enter reset code"

After a "Total reset" in FieldCare you have to press the "refresh" button in order to ensure that the measuring units are also reset.

8 Integrating device via HART® protocol

Version data for the device

Firmware version	01.00.zz	▪ On the title page of the Operating instructions ▪ On nameplate → 🖹 15 ▪ **Firmware Version** parameter Diagnosis→ Instrument info → Firmware version
Manufacturer ID	17 (0x11)	**Manufacturer ID.** parameter Diagnosis → Instrument info→ Manufacturer ID
Device type code	36 (0x24)	**Device type code** parameter Diagnosis → Instrument info → Device type code
HART protocol revision	6.0	---
Device revision	1	▪ On nameplate → 🖹 15 ▪ **Device revision** parameter Diagnosis→ Instrument info → Device revision

The suitable device description file (DD) for the individual operating tools is listed in the table below, along with information on where the file can be acquired.

Operating tools

Operating tool	Reference sources for device descriptions (DD and DTM)
FieldCare	▪ www.endress.com → Downloads area ▪ CD–ROM (contact Endress+Hauser) ▪ DVD (contact Endress+Hauser)
AMS Device Manager (Emerson Process Management)	www.endress.com → Downloads area
SIMATIC PDM (Siemens)	www.endress.com → Downloads area
Field Communicator 375, 475 (Emerson Process Management)	Use update function of handheld terminal

8.1 HART process variables and measured values

The following numbers are assigned to the process variables in the factory:

Process variable	Pressure	Level	
		Linear	Table active
First process variable (Primary variable)	0 (Pressure measured)	8 (Level before linearization)	9 (Tank content)
Second process variable (Secondary variable)	2 (Corrected press.)	0 (Pressure measured)	8 (Level before linearization)

Process variable	Pressure	Level	
		Linear	Table active
Third process variable (Tertiary variable)	3 (Sensor pressure)	2 (Corrected press.)	0 (Pressure measured)
Fourth process variable (Quaternary variable)	4 (Sensor temp.)		

The assignment of the device variables to the process variable is displayed in the **Expert → Communication → HART output** menu.

The assignment of the device variables to the process variable (SV, TV, QV) can be changed using HART command 51.

An overview of the possible device variables can be found in the following section.

8.2 Device variables and measured values

The following measured values are assigned to the individual device variables:

Device variable code	Device variable	Measured value	Operating mode
0	PRESSURE_1_FINAL_VALUE	Pressure measured	All
1	PRESSURE_1_AFTER_DAMPING	Pressure af.damp	All
2	PRESSURE_1_AFTER_CALIBRATION	Corrected press.	All
3	PRESSURE_1_AFTER_SENSOR	Corrected press.	All
4	MEASURED_TEMPERATURE_1	Sensor temp.	All
8	MEASURED_LEVEL_AFTER_ SIMULATION	Level before lin.	Only level
9	MEASURED_TANK_CONTENT_AFTER_ SIMULATION	Tank content	Only level
10	CORRECTED_MEASUREMENT_ DENSITY	Process density	Only level
12	HART_INPUT_VALUE [1)]	HART input val.	-
251	None (no device variable is mapped)	-	All (but only for quaternary variable)

1) Cannot be selected as an output

The device variables can be queried from a HART® master using HART® command 9 or 33.

9 Commissioning

NOTICE

If a pressure smaller than the minimum permitted pressure or greater than the maximum permitted pressure is present at the device, the following messages are output in succession:

- "S140 Working range P" or "F140 Working range P" (depending on the setting in the "Alarm behav. P" parameter)
- "S841 Sensor range" or "F841 Sensor range" (depending on the setting in the "Alarm behav. P" parameter)
- "S971 Adjustment" (depending on setting in "Alarm behav. P" parameter

9.1 Post-installation check and function check

Before commissioning your measuring point, ensure that the post-installation and post-connection check have been performed.

- "Post-installation check" checklist→ 25
- "Post-connection check" checklist→ 35

9.2 Unlocking/locking configuration

If the device is locked to prevent configuration, it must first be unlocked.

9.2.1 Locking/unlocking software

If the device is locked via the software (device access code), the key symbol appears in the measured value display. If an attempt is made to write to a parameter, a prompt for the device access code appears. To unlock, enter the user-defined device access code.

9.3 Commissioning

Commissioning comprises the following steps:

- Function check→ 43
- Selection of the measuring mode and pressure unit → 43
- Position adjustment → 44
- Configuring measurement:
  - Pressure measurement→ 46
  - Level measurement → 48

9.4 Measuring mode selection

The device is configured for the "Pressure" measuring mode as standard. The measuring range and the unit in which the measured value is transmitted correspond to the data on the nameplate.

WARNING

Changing the measuring mode affects the span (URV)

This situation can result in product overflow.

- If the measuring mode is changed, the setting for the span (URV) must be checked in the "Setup" operating menu and readjusted if necessary.

Measuring mode

Navigation Setup → Measuring mode

Write permission Operator/Service engineers/Expert

Description Select the measuring mode.
The operating menu is structured differently depending on the measuring mode selected.

Options
- Pressure
- Level

Factory setting Level

9.5 For selecting the pressure engineering unit

Press. eng. unit

Navigation Setup → Press. eng. unit

Write permission Operator/Service engineers/Expert

Description Select the pressure engineering unit. If a new pressure engineering unit is selected, all pressure-specific parameters are converted and displayed with the new unit.

Options
- mbar, bar
- mmH2O, mH2O, inH2O
- ftH2O
- Pa, kPa, MPa
- psi
- mmHg, inHg
- kgf/cm^2

Factory setting mbar or bar depending on the nominal measuring range of the sensor module, or as per order specifications.

9.6 Position adjustment

The pressure resulting from the orientation of the device can be corrected here.

Pos. zero adjust (gauge pressure sensor)

Navigation Setup → Pos. zero adjust

Write permission Operator/Service engineers/Expert

Description Position adjustment – the pressure difference between zero (set point) and the measured pressure need not be known.

Options
- Confirm
- Cancel

Example
- Measured value = 2.2 mbar (0.033 psi)
- You correct the measured value via the "Pos. zero adjust" parameter with the "Confirm" option. This means that you are assigning the value 0.0 to the pressure present.
- Measured value (after pos. zero adjust) = 0.0 mbar
- The current value is also corrected.

Factory setting Cancel

Calib. offset

Write permission Service engineers/Expert

Description Position adjustment – the pressure difference between the set point and the measured pressure must be known.

Example
- Measured value = 982.2 mbar (14.73 psi)
- You correct the measured value with the value entered (e.g. 2.2 mbar (0.033 psi)) via the "Calib. Offset" parameter. This means that you are assigning the value 980.0 (14.7 psi) to the pressure present.
- Measured value (after pos. zero adjust) = 980.0 mbar (14.7 psi)
- The current value is also corrected.

Factory setting 0.0

9.7 Configuring the damping

The output signal follows measured value changes with the delay time. This can be configured via the operating menu.

Damping

Navigation Setup → Damping

Write permission Operator/Service engineers/Expert
(if the "Damping" DIP switch is set to "on")

Description Enter damping time (time constant τ) ("Damping" DIP switch set to "on")
Display damping time (time constant τ) ("Damping" DIP switch set to "off").
The damping affects the speed at which the measured value reacts to changes in pressure.

Input range 0.0 to 999.0 s

Factory setting 2.0 sec. or according to order specifications

9.8 Configuring pressure measurement

9.8.1 Calibration with reference pressure (wet calibration)

Example:

In this example, a device with a 400 mbar (6 psi) sensor module is configured for the 0 to +300 mbar (0 to 4.5 psi) measuring range, i.e. 0 mbar and 300 mbar (4.5 psi) are assigned, respectively, to the 4 mA value and the 20 mA value.

Prerequisite:

The pressure values 0 mbar and 300 mbar (4.5 psi) can be specified. For example, the device is already installed.

Due to the orientation of the device, there may be pressure shifts in the measured value, i.e. the measured value is not zero in a pressureless condition. For information on how to perform position adjustment, see → 44.

	Description	
1	Select the "Pressure" measuring mode via the "Measuring Mode" parameter. Menu path: Setup → Measuring mode **WARNING** **Changing the measuring mode affects the span (URV)** This situation can result in product overflow. ▶ If the measuring mode is changed, the setting for the span (URV) must be checked in the "Setup" operating menu and readjusted if necessary.	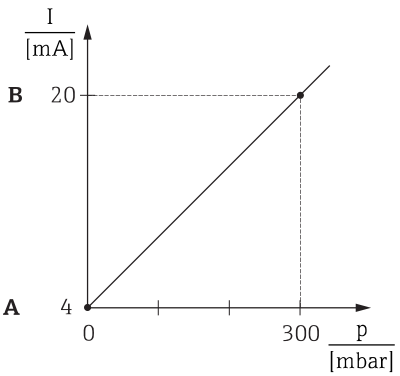 A0031032 *A See table, step 3.* *B See table, step 4.*
2	Select a pressure unit via the "Press eng. unit" parameter, here "mbar" for example. Menu path: Setup → Press. eng. unit	
3	The pressure for the LRV (4 mA value) is present at the device, here 0 mbar for example	
	Select the "Get LRV" parameter. Menu path: Setup → Extended setup → Current output → Get LRV	
	Confirm the present value by selecting "Apply". The present pressure value is assigned to the lower current value (4 mA).	
4	The pressure for the URV (20 mA value) is present at the device, here 300 mbar (4.5 psi) for example.	
	Select the "Get URV" parameter. Menu path: Setup → Extended setup → Current output → Get URV	
	Confirm the present value by selecting "Apply". The present pressure value is assigned to the upper current value (20 mA).	
5	Result: The measuring range is configured for 0 to +300 mbar (0 to 4.5 psi).	

9.8.2 Calibration without reference pressure (dry calibration)

Example:

In this example, a device with a 400 mbar (6 psi) sensor module is configured for the 0 to +300 mbar (0 to 4.5 psi) measuring range, i.e. 0 mbar and 300 mbar (4.5 psi) are assigned, respectively, to the 4 mA value and the 20 mA value.

Prerequisite:

This is a theoretical calibration, i.e. the pressure values for the lower and upper range are known.

Due to the orientation of the device, there may be pressure shifts in the measured value, i.e. the measured value is not zero in a pressureless condition. For information on how to perform position adjustment, see → 44.

	Description
1	Select the "Pressure" measuring mode via the "Measuring Mode" parameter. Menu path: Setup → Measuring mode **WARNING** **Changing the measuring mode affects the span (URV)** This situation can result in product overflow. ► If the measuring mode is changed, the setting for the span (URV) must be checked in the "Setup" operating menu and readjusted if necessary.
2	Select a pressure unit via the "Press eng. unit" parameter, here "mbar" for example. Menu path: Setup → Press. eng. unit
3	Select the "Set LRV" parameter. Menu path: Setup → Extended setup → Current output → Set LRV
	Enter the value for the "Set LRV" parameter (here 0 mbar) and confirm. This pressure value is assigned to the lower current value (4 mA).
4	Select the "Set URV" parameter. Menu path: Setup → Extended setup → Current output → Set URV
	Enter the value for the "Set URV" parameter, here 300 mbar (4.5 psi), and confirm. This pressure value is assigned to the upper current value (20 mA).
5	Result: The measuring range is configured for 0 to +300 mbar (0 to 4.5 psi).

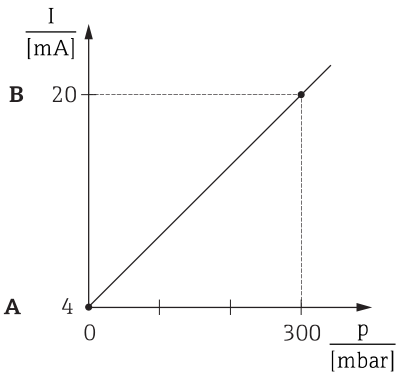

A See table, step 3.
B See table, step 4.

9.9 Configuring level measurement

9.9.1 Information on level measurement

You have a choice of two methods for calculating the level: "In pressure" and "In height". The table in the "Overview of level measurement" section that follows provides you with an overview of these two measuring tasks.

- The limit values are not checked, i.e. the values entered must be appropriate for the sensor module and the measuring task for the device to be able to measure correctly.
- Customer-specific units are not possible.
- The values entered for "Empty calib./Full calib.", "Empty pressure/Full pressure", "Empty height/Full height" and "Set LRV/Set URV" must be at least 1% apart. The value will be rejected, and a message displayed, if the values are too close together.

9.9.2 Overview of level measurement

Measuring task	Level selection	Measured variable options	Description	Measured value display
Calibration is performed by entering two pressure-level value pairs.	"In pressure"	Via the "Output unit" parameter: %, level, volume or mass units	▪ Calibration with reference pressure (wet calibration) → 🖹 50 ▪ Calibration without reference pressure (dry calibration)→ 🖹 48	The measured value display and the "Level before lin" parameter display the measured value.
Calibration is performed by entering the density and two height-level value pairs.	"In height"		▪ Calibration with reference pressure (wet calibration) → 🖹 54 ▪ Calibration without reference pressure (dry calibration)→ 🖹 52	

9.9.3 "In pressure" level selection Calibration without reference pressure (dry calibration)

Example:

In this example, the volume in a tank should be measured in liters. The maximum volume of 1 000 l (264 gal) corresponds to a pressure of 400 mbar (6 psi).

The minimum volume of 0 liters corresponds to a pressure of 0 mbar since the process isolating diaphragm of the probe is at the start of the level measuring range.

Prerequisite:

- The measured variable is in direct proportion to the pressure.
- This is a theoretical calibration i.e. the pressure and volume values for the lower and upper calibration point must be known.

- The values entered for "Empty calib./Full calib.", "Empty pressure/Full pressure" and "Set LRV/Set URV" must be at least 1% apart. The value will be rejected, and a message displayed, if the values are too close together. Further limit values are not checked, i.e. the values entered must be appropriate for the sensor module and the measuring task for the device to be able to measure correctly.
- Due to the orientation of the device, there may be pressure shifts in the measured value, i.e. when the vessel is empty or partly filled, the measured value is not zero. For information on how to perform position adjustment, see → 🖹 44.

	Description	
1	Select the "Level" measuring mode via the "Measuring mode" parameter. Menu path: Setup → Measuring mode **⚠ WARNING** **Changing the measuring mode affects the span (URV)** This situation can result in product overflow. ▶ If the measuring mode is changed, the setting for the span (URV) must be checked in the "Setup" operating menu and readjusted if necessary.	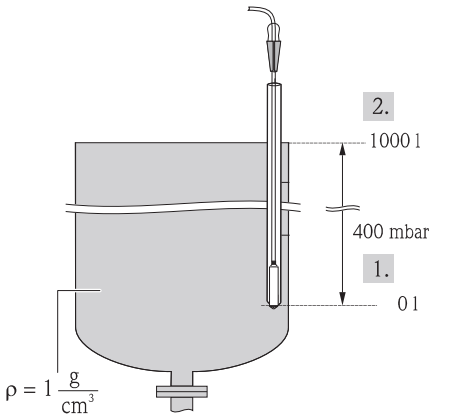 *1 See table, steps 6 and 7.* *2 See table, steps 8 and 9.*
2	Select a pressure unit via the "Press eng. unit" parameter, here "mbar" for example. Menu path: Setup → Press. eng. unit	
3	Select the "In pressure" level mode via the "Level selection" parameter. Menu path: Setup → Extended setup → Level → Level selection.	
4	Select a volume unit via the "Output unit" parameter, here "l" (liters) for example. Menu path: Setup → Extended setup → Level → Output unit	
5	Select the "Dry" option via the "Calibration mode" parameter. Menu path: Setup → Extended setup → Level → Calibration mode	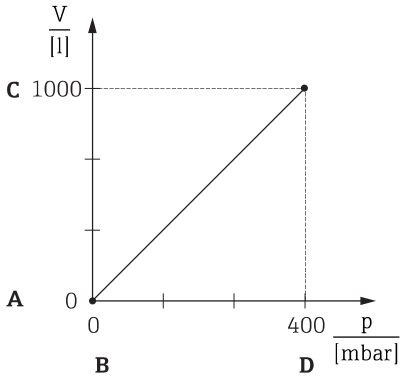 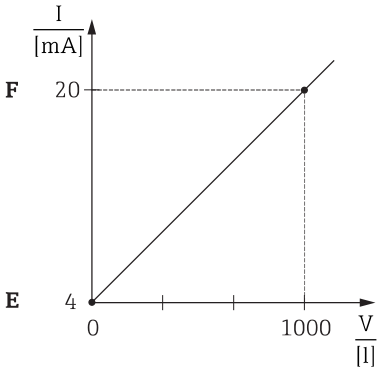 *A See table, step 6.* *B See table, step 7.* *C See table, step 8.* *D See table, step 9.* *E See table, step 11* *F See table, step 12*
6	Enter the volume value for the lower calibration point via the "Empty calib." parameter, here 0 liters for example. Menu path: Setup → Extended setup → Level → Empty calib.	
7	Enter the pressure value for the lower calibration point via the "Empty pressure" parameter, here "0 mbar" for example. Menu path: Setup → Extended setup → Level → Empty pressure	
8	Enter the volume value for the upper calibration point via the "Full calib." parameter, here 1 000 l (264 gal) for example. Menu path: Setup → Extended setup → Level → Full calib.	
9	Enter the pressure value for the upper calibration point via the "Full pressure" parameter, here 400 mbar (6 psi) for example. Menu path: Setup → Extended setup → Level → Full pressure	
10	"Adjust density" contains the factory setting 1.0 but can be changed if required. The value pairs subsequently entered must correspond to this density. Menu path: Setup → Extended setup → Level → Adjust density	
11	Set the volume value for the lower current value (4 mA) via the "Set LRV" parameter (0 l). Menu path: Setup → Extended setup → Current output → Set LRV	
12	Set the volume value for the upper current value (20 mA) via the "Set URV" parameter(1 000 l (264 gal)). Menu path: Setup → Extended setup → Current output → Set URV	

	Description	
13	If the process uses a medium other than that on which the calibration was based, the new density must be specified in the "Process density" parameter. Menu path: Setup → Extended setup → Current output → Process density.	
14	If density correction is required, assign the temperature probe in the "Auto dens. corr." parameter. A density correction is only possible for water. A temperature-density curve that is saved in the device is used. For this reason, the "Adjust density" (step 10) and "Process density" (step 13) parameters are not used here. Menu path: Expert → Application → Level → Auto dens. corr.	
15	Result: The measuring range is configured for 0 to 1 000 l (0 to 264 gal).	

For this level mode, the measured variables %, level, volume and mass are available, see "Output unit" → 94.

9.9.4 "In pressure" level selection Calibration with reference pressure (wet calibration)

Example:

In this example, the level in a tank should be measured in "m". The maximum level is 3 m (9.8 ft).

The pressure range is derived from the level and the density of the medium. In this situation, the device sets the pressure range to 0 to +300 mbar (0 to 4.5 psi).

Prerequisite:

- The measured variable is in direct proportion to the pressure.
- The tank can be filled and emptied.

The values entered for "Empty calib./Full calib." and" Set LRV/Set URV" and the pressures present must be at least 1% apart. The value will be rejected, and a message displayed, if the values are too close together. Other limit values are not checked, i.e. the values entered must be appropriate for the sensor and the measuring task for the device to be able to measure correctly.

	Description
1	Perform "position adjustment"→ 🖹 44.
2	Select the "Level" measuring mode via the "Measuring mode" parameter. Menu path: Setup → Measuring mode **⚠ WARNING** **Changing the measuring mode affects the span (URV)** This situation can result in product overflow. ▶ If the measuring mode is changed, the setting for the span (URV) must be checked in the "Setup" operating menu and readjusted if necessary.
3	Select a pressure unit via the "Press eng. unit" parameter, here "mbar" for example. Menu path: Setup → Press. eng. unit
4	Select the "In pressure" level mode via the "Level selection" parameter. Menu path: Setup → Extended setup → Level → Level selection.
5	If density correction is required, assign the temperature probe in the "Auto dens. corr." parameter. Menu path: Expert → Application → Auto dens. corr. A density correction is only possible for water. A temperature-density curve that is saved in the device is used. For this reason, the "Adjust density" (step 8) and "Process density" (step 13) parameters are not used here.
6	Select a level unit via the "Output unit" parameter, here "m" for example. Menu path: Setup → Extended setup → Level → Output unit
7	Select the "Wet" option via the "Calibration mode" parameter. Menu path: Setup → Extended setup → Level → Calibration mode
8	If the calibration is performed with a medium other than the process medium, enter the density of the calibration medium in the "Adjust density" parameter. Menu path: Setup → Extended setup → Level → Adjust density ℹ The process density can be changed only if automatic density correction is switched off (see step 5).
9	The hydrostatic pressure for the lower calibration point is present at the device, here "0 mbar" for example.
	Select the "Empty calib." parameter. Menu path: Setup → Extended setup → Level → Empty calib.
	Enter the level value, here 0 m for example. The pressure value present is assigned to the lower level value by confirming the value.
10	The hydrostatic pressure for the upper calibration point is present at the device, here 300 mbar (4.35 psi) for example.

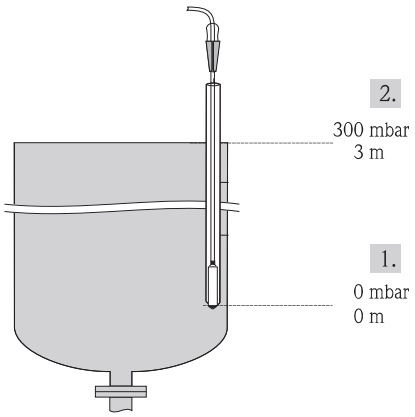

1 See table, step 9.
2 See table, step 10.

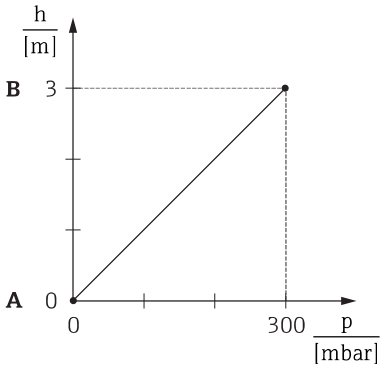

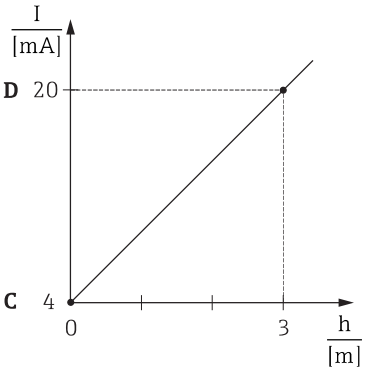

A See table, step 9.
B See table, step 10.
C See table, step 11.
D See table, step 12.

	Description	
	Select the "Full calib." parameter. Menu path: Setup → Extended setup → Level → Full calib.	
	Enter the level value, here 3 m (9.8 ft) for example. The pressure value present is assigned to the upper level value by confirming the value.	
11	Use the "Set LRV" parameter to set the level value for the lower current value (4 mA), here "0 m" for example. Menu path: Setup → Extended setup → Current output → Set LRV	
12	Use the "Set URV" parameter to set the upper current value (20 mA) (3 m (9.8 ft)). Menu path: Setup → Extended setup → Current output → Set URV	
12	If the process uses a medium other than that on which the calibration was based, the new density must be specified in the "Process density" parameter. Menu path: Setup → Extended setup → Level → Process density. The process density can be changed only if automatic density correction is switched off (see step 5).	
13	Result: The measuring range is configured for 0 to 3 m (0 to 9.8 ft).	

For this level mode, the measured variables %, level, volume and mass are available, see "Output unit". → 94.

9.9.5 "In height" level selection Calibration without reference pressure (dry calibration)

Example:

In this example, the volume in a tank should be measured in liters. The maximum volume of 1 000 l (264 gal) corresponds to a level of 4 m (13 ft). The minimum volume of 0 liter corresponds to a level of 0 m since the process isolating diaphragm of the probe is at the start of the level measuring range.

Prerequisite:

- The measured variable is in direct proportion to the pressure.
- This is a theoretical calibration i.e. the height and volume values for the lower and upper calibration point must be known.

- The values entered for "Empty calib./Full calib.", "Empty height/Full height" and" Set LRV/Set URV" must be at least 1% apart. The value will be rejected, and a message displayed, if the values are too close together. Other limit values are not checked, i.e. the values entered must be appropriate for the sensor and the measuring task for the device to be able to measure correctly.
- Due to the orientation of the device, there may be pressure shifts in the measured value, i.e. when the vessel is empty or partly filled, the measured value is not zero. For information on how to perform position adjustment, see → 44.

	Description
1	Select the "Level" measuring mode via the "Measuring mode" parameter. Menu path: Setup → Measuring mode **⚠ WARNING** **Changing the measuring mode affects the span (URV)** This situation can result in product overflow. ▶ If the measuring mode is changed, the setting for the span (URV) must be checked in the "Setup" operating menu and readjusted if necessary.
2	Select a pressure unit via the "Press eng. unit" parameter, here "mbar" for example. Menu path: Setup → Press. eng. unit
3	Select the "In height" level mode via the "Level selection" parameter. Menu path: Setup → Extended setup → Level → Level selection.
4	If density correction is required, assign the temperature probe in the "Auto dens. corr." parameter. Menu path: Setup → Extended setup → Level → Level selection.
4	Select a volume unit via the "Output unit" parameter, here "l" (liters) for example. Menu path: Setup → Extended setup → Level → Output unit A density correction is only possible for water. A temperature-density curve that is saved in the device is used. For this reason, the "Adjust density" (step 12) and "Process density" (step 15) parameters are not used here.
5	Select a volume unit via the "Output unit" parameter, here "l" (liters) for example. Menu path: Setup → Extended setup → Level → Output unit
6	Select a level unit via the "Height unit" parameter, here "m" for example. Menu path: Setup → Extended setup → Level → Height unit
7	Select the "Dry" option via the "Calibration mode" parameter. Menu path: Setup → Extended setup → Level → Calibration mode
8	Enter the volume value for the lower calibration point via the "Empty calib." parameter, here 0 liters for example. Menu path: Setup → Extended setup → Level → Empty calib.
9	Enter the height value for the lower calibration point via the "Empty height" parameter, here 0 m for example. Menu path: Setup → Extended setup → Level → Empty height
10	Enter the volume value for the upper calibration point via the "Full calib." parameter, here 1 000 l (264 gal) for example. Menu path: Setup → Extended setup → Level → Full calib.

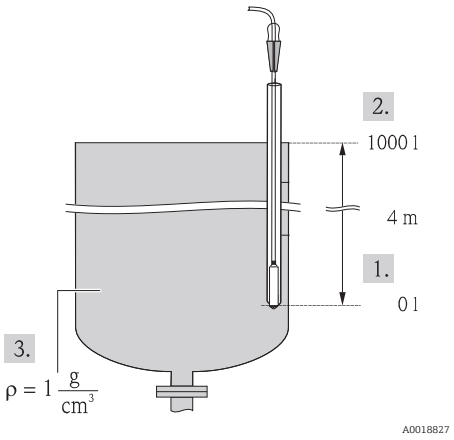

1 See table, steps 10 and 11.
2 See table, steps 13 and 14.
3 See table, step 12

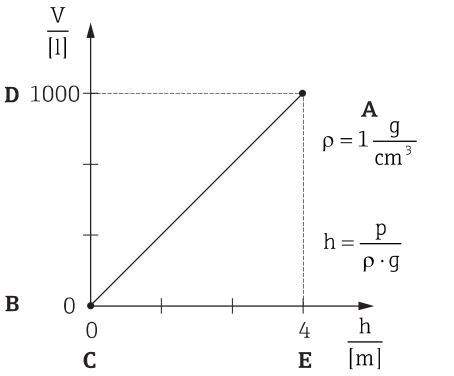

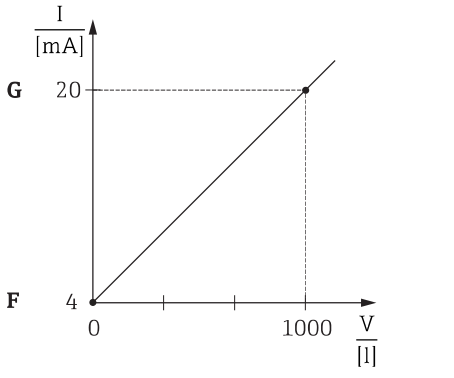

A See table, step 12.
B See table, step 8.
C See table, step 9.
D See table, step 10.
E See table, step 11.
F See table, step 13.
G See table, step 14.

	Description	
11	Enter the height value for the upper calibration point via the "Full height" parameter, here 4 m (13 ft) for example. Menu path: Setup → Extended setup → Level → Full height	
12	Enter the density of the medium via the "Adjust density" parameter, here "1 g/cm³" (1 SGU) for example. Menu path: Setup → Extended setup → Level → Adjust density	
13	Set the volume value for the lower current value (4 mA) via the "Set LRV" parameter (0 l). Menu path: Setup → Extended setup → Current output → Set LRV	
14	Set the volume value for the upper current value (20 mA) via the "Set URV" parameter (1 000 l (264 gal)). Menu path: Setup → Extended setup → Current output → Set URV	
15	If the process uses a medium other than that on which the calibration was based, the new density must be specified in the "Process density" parameter. Menu path: Setup → Extended setup → Current output → Process density. The process density can only be changed if automatic density correction is switched off (see Step 4).	
16	Result: The measuring range is configured for 0 to 1 000 l (0 to 264 gal).	

For this level mode, the measured variables %, level, volume and mass are available, see "Output unit". → 94.

9.9.6 "In height" level selection Calibration with reference pressure (wet calibration)

Example:

In this example, the volume in a tank should be measured in liters. The maximum volume of 1 000 l (264 gal) corresponds to a level of 4 m (13 ft).

The minimum volume of 0 liter corresponds to a level of 0 m since the process isolating diaphragm of the probe is at the start of the level measuring range. The density of the fluid is 1 g/cm³ (1 SGU).

Prerequisite:

- The measured variable is in direct proportion to the pressure.
- The tank can be filled and emptied.

The values entered for "Empty calib./Full calib." and" Set LRV/Set URV" and the pressures present must be at least 1% apart. The value will be rejected, and a message displayed, if the values are too close together. Other limit values are not checked, i.e. the values entered must be appropriate for the sensor and the measuring task for the device to be able to measure correctly.

	Description	
1	Perform "position adjustment"→ 🖹 44.	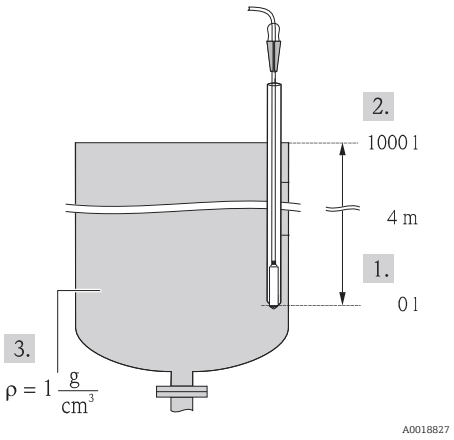 A0018827 *1 See table, step 9.* *2 See table, step 10.* *3 See table, step 11.*
2	Select the "Level" measuring mode via the "Measuring mode" parameter. Menu path: Setup → Measuring mode **⚠ WARNING** **Changing the measuring mode affects the span (URV)** This situation can result in product overflow. ▶ If the measuring mode is changed, the setting for the span (URV) must be checked in the "Setup" operating menu and readjusted if necessary.	
3	Select the "In height" level mode via the "Level selection" parameter. Menu path: Setup → Extended setup → Level → Level selection.	
4	If density correction is required, assign the temperature probe in the "Auto dens. corr." parameter. Menu path: Expert → Application → Auto dens. corr. A density correction is only possible for water. A temperature-density curve that is saved in the device is used. For this reason, the "Adjust density" (step 11) and "Process density" (step 14) parameters are not used here.	
5	Select a pressure unit via the "Press eng. unit" parameter, here "mbar" for example. Menu path: Setup → Press. eng. unit	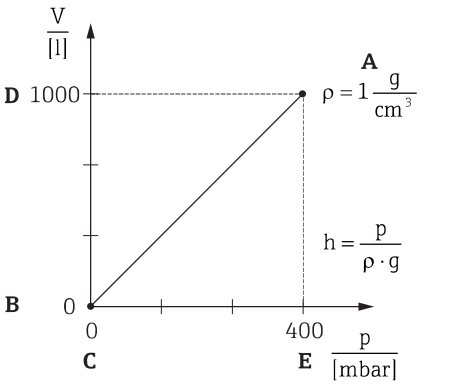 A0031097
6	Select a volume unit via the "Output unit" parameter, here "l" (liters) for example Menu path: Setup → Extended setup → Level → Output unit	
7	Select a height unit via the "Height unit" parameter, here "m" for example. Menu path: Setup → Extended setup → Level → Height unit	
8	Select the "Wet" option via the "Calibration mode" parameter. Menu path: Setup → Extended setup → Level → Calibration mode	
9	The hydrostatic pressure for the lower calibration point is present at the device, here "0 mbar" for example.	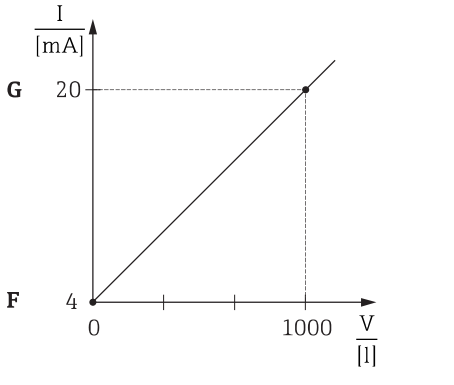 A0031067 *A See table, step 11.* *B See table, step 9.* *C See table, step 9.* *D See table, step 10.*
	Enter the volume value for the lower calibration point via the "Empty calib." parameter, here "0 liters" for example. Menu path: Setup → Extended setup → Level → Empty calib.	
10	The hydrostatic pressure for the upper calibration point is present at the device, here "400 mbar (6 psi)" for example.	
	Enter the volume value for the upper calibration point via the "Full calib." parameter, here 1 000 l (264 gal) for example. Menu path: Setup → Extended setup → Level → Full calib.	

	Description	
11	If the calibration is performed with a medium other than the process medium, enter the density of the calibration medium in the "Adjust density" parameter, here 1 g/cm³ (1 SGU) for example. Menu path: Setup → Extended setup → Level → Adjust density The process density can only be changed if automatic density correction is switched off (see Step 4).	*E See table, step 10.* *F See table, step 12.* *G See table, step 13.*
12	Set the volume value for the lower current value (4 mA) via the "Set LRV" parameter (0 l). Menu path: Setup → Extended setup → Current output → Set LRV	
13	Set the volume value for the upper current value (20 mA) via the "Set URV" parameter(1 000 l (264 gal)). Menu path: Setup → Extended setup → Current output → Set URV	
14	If the process uses a medium other than that on which the calibration was based, the new density must be specified in the "Process density" parameter. Menu path: Setup → Extended setup → Level → Process density. The process density can only be changed if automatic density correction is switched off (see Step 4).	
15	Result: The measuring range is configured for 0 to 1 000 l (0 to 264 gal).	

For this level mode, the measured variables %, level, volume and mass are available, see "Output unit". → 94.

9.9.7 Calibration with partially filled vessel (wet calibration)

Example:

This example explains a wet calibration for cases in which it is not possible to empty the vessel and then fill it to 100%.

During this wet calibration, a level of 20% is used as the calibration point for "Empty" and a level of "25%" is used as the calibration point for "Full".

The calibration is then extended to 0% to 100% and lower range-value (LRV)/upper range-value (URV) are adapted accordingly.

Prerequisite:

- The default value in level mode for the calibration mode is "Wet".
- This value can be adjusted: Menu path: Setup → Extended setup → Level → Calibration mode

	Description	
1	Select the "Level" measuring mode via the "Measuring mode" parameter. Menu path: Setup → Measuring mode **⚠ WARNING** **Changing the measuring mode affects the span (URV)** This situation can result in product overflow. ▶ If the measuring mode is changed, the setting for the span (URV) must be checked in the "Setup" operating menu and readjusted if necessary.	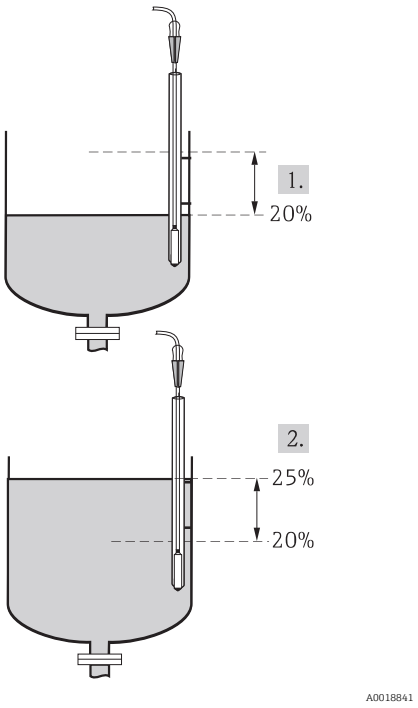 *1 See table, step 2* *2 See table, step 3*
2	Set the value for "Empty calib." with the acting pressure for the level, e.g. 20% Menu path: Setup → Extended setup → Level → Empty calib.	
3	Set the value for "Full calib." with the acting pressure for the level, e.g. 25%. Menu path: Setup → Extended setup → Level → Full calib.	
4	The values for the pressure when the vessel is full or empty are measured automatically during adjustment. The transmitter automatically sets the pressure values that are most suitable for "Empty calib." and "Full calib." as the minimum and maximum pressure which generates the output current. For this reason, the correct upper-range value (URV) and the correct lower-range value (LRV) must be set.	

If the process uses a medium other than that on which the calibration was based, the new density must be specified in the "Process density" parameter. In this case, you have to enter the various densities via the following menu path:
- Setup → Extended setup → Level→ Adjust Density (034) (e.g. 1.0 kg/l for water)
- Setup → Extended setup → Level → Process Density (035) (e.g. 0.8 kg/l for oil)

9.9.8 Level measurement with absolute pressure probe and external pressure signal (electrical differential pressure)

Example:

In this example, a Waterpilot FMX21 and a Cerabar M (each with an absolute pressure measuring cell) are connected via the common communication bus. The level can thus be measured in a deep well, with simultaneous compensation for the effect of atmospheric pressure.

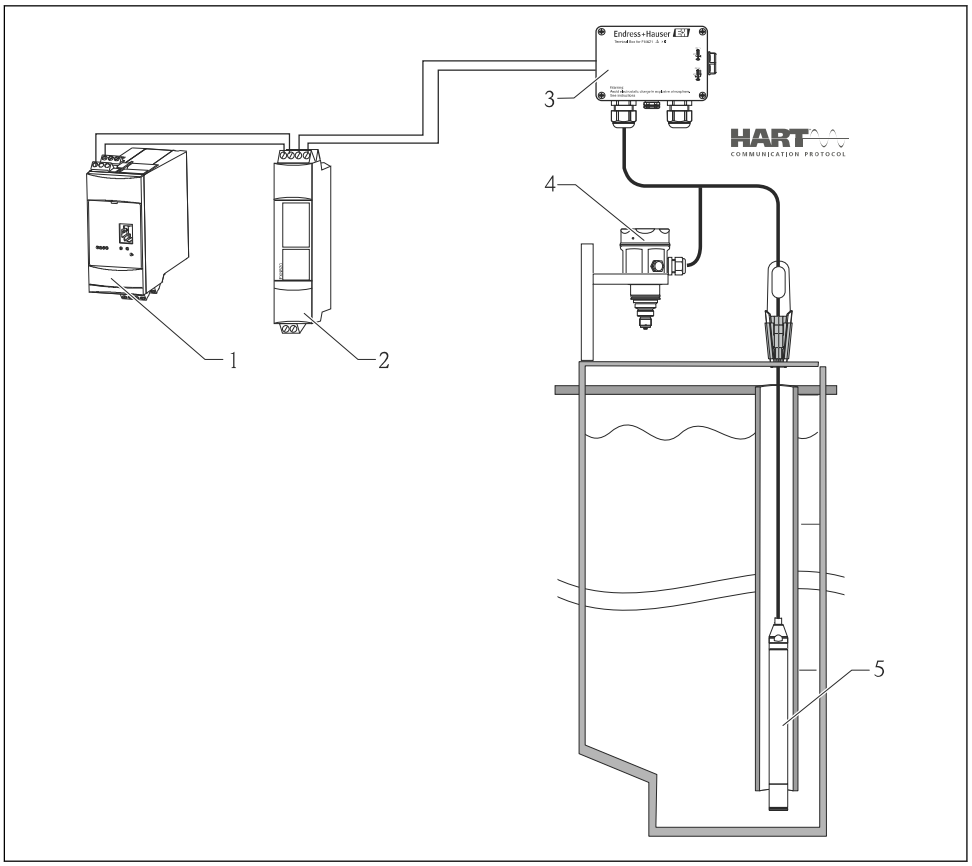

1 *Fieldgate FXA520*
2 *Multidrop Connector FXN520*
3 *Terminal box (can be ordered as an accessory)*
4 *Cerabar M absolute pressure (level)*
5 *Waterpilot absolute pressure (pressure)*

	Sensor level adjustment (Waterpilot)
1	Select the "Pressure" measuring mode via the "Measuring Mode" parameter. Menu path: Setup → Measuring mode **⚠ WARNING** **Changing the measuring mode affects the span (URV)** This situation can result in product overflow. ► If the measuring mode is changed, the setting for the span (URV) must be checked in the "Setup" operating menu and readjusted if necessary.
2	Select a pressure unit via the "Press eng. unit" parameter, here "mbar" for example. Menu path: Setup → Press. eng. unit
3	The sensor is unpressurized, perform a position adjustment → 📄 44
4	Switch on burst mode via the "Burst mode" parameter. Menu path: Expert → Communication → HART config
5	Set the output current to "Fixed" 4.0 mA via the "Current Mode" parameter. Menu path: Expert → Communication → HART config
6	Configure an address ≠0 using the "Bus address" parameter, e.g. bus address = 1. (HART 5.0 master: Range 0 to 15, where address = 0 calls up the "Signaling" setting; HART 6.0 master: Range 0 to 63) Menu path: Expert → Communication → HART config

	Sensor level adjustment (Cerabar)
1	Select the "Level" measuring mode via the "Measuring mode" parameter. Menu path: Setup → Measuring mode **⚠ WARNING** **Changing the measuring mode affects the span (URV)** This situation can result in product overflow. ▶ If the measuring mode is changed, the setting for the span (URV) must be checked in the "Setup" operating menu and readjusted if necessary.
2	Select a pressure unit via the "Press eng. unit" parameter, here "mbar" for example. Menu path: Setup → Press. eng. unit
3	The sensor is unpressurized, perform a position adjustment → 📄 44
4	Set the output current to "Fixed" 4.0 mA via the "Current Mode" parameter. Menu path: Expert → Communication → HART config
5	Configure an address ≠0 using the "Bus address" parameter, e.g. bus address = 2. (HART 5.0 master: Range 0 to 15, where address = 0 calls up the "Signaling" setting; HART 6.0 master: Range 0 to 63) Menu path: Expert → Communication → HART config
6	Activate the reading of a value sent externally in burst mode via the "Electr. Delta P" parameter. Menu path: Expert → Application
7	Perform level adjustment (wet or dry)
8	Result: The measured value output by the atmospheric pressure sensor equals the level in the deep well (differential signal) and can be read out by means of a HART request for the address of the atmospheric pressure sensor.

- It is not permissible to reverse the assignment of the measuring points to the direction of communication.
- The measured value of the transmitting device (via burst) must always be greater than the measured value of the receiving device (via "Electr. Delta P" mode).
- Adjustments that involve an offset in the pressure values (e.g. position adjustment, trim) must always suit the individual sensor and the sensor's orientation irrespective of the "Electr. Delta P" application.
- Other settings result in non-permitted use of the "Electr. Delta P" mode and can lead to incorrect measured values.

9.10 Automatic density compensation

9.10.1 Automatic density compensation with the internally measured sensor temperature

Example:

In this example, a Waterpilot FMX21 is used for level measurement in water. The change in the water density caused by changing temperatures is automatically factored into the level signal by activating the automatic density compensation.

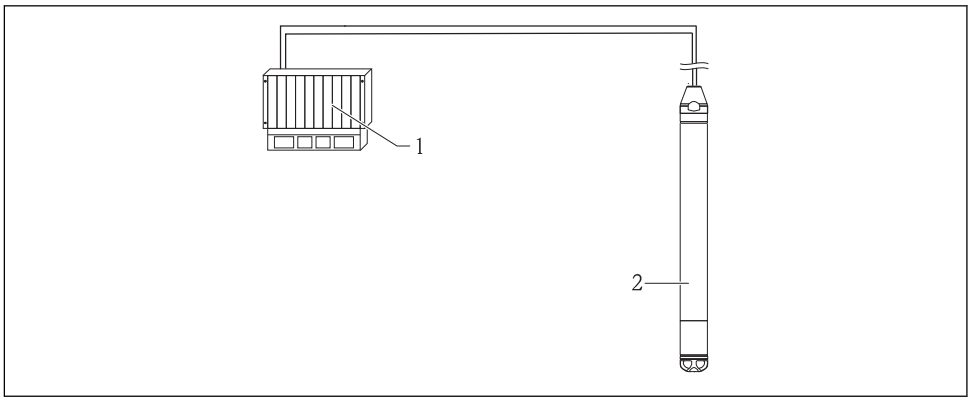

1 HART master, e.g. PLC (programmable logic controller)
2 Waterpilot FMX21

	Waterpilot adjustment for level measurement
1	Select the "Level" measuring mode via the "Measuring mode" parameter. Menu path: Setup → Measuring mode **⚠ WARNING** **Changing the measuring mode affects the span (URV)** This situation can result in product overflow. ▶ If the measuring mode is changed, the setting for the span (URV) must be checked in the "Setup" operating menu and readjusted if necessary.
2	Select a pressure unit via the "Press eng. unit" parameter, here "mbar" for example. Menu path: Setup → Press. eng. unit
3	The sensor is unpressurized, perform a position adjustment → 🖹 44
4	Set the "Auto dens. corr." parameter to Sensor temperature. Menu path: Expert → Application
5	Perform level adjustment (wet or dry)
6	Result: The measured value output by the Waterpilot corresponds to the level in the deep well corrected by means of the density characteristic line of water.

9.10.2 Automatic density compensation using an integrated Pt100 for calculation in a suitable HART master (e.g. PLC)

Example:

In this example, the FMX21 with an integrated Pt100 is connected via the common communication bus to any temperature head transmitter with HART communication (e.g. TMT182). The temperature and pressure signal is transmitted to the HART master (e.g. PLC), where a corrected level value can be generated using a stored linearization table or density function (of a chosen medium). A pressure signal and a temperature signal can thus be generated with a chosen density function to compensate for a level.

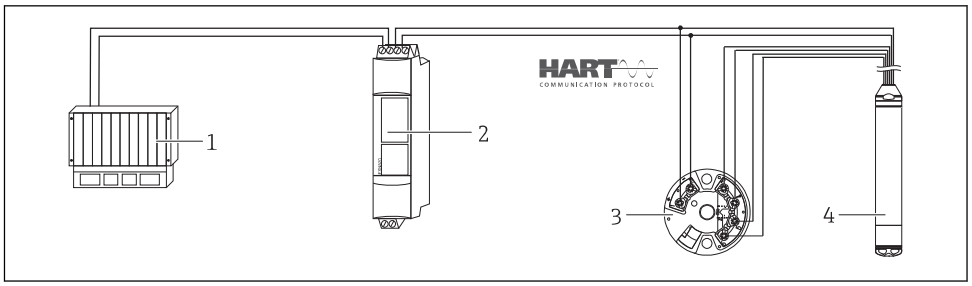

1 HART master, PLC (programmable logic controller)
2 Multidrop Connector FXN520
3 TMT182 temperature head transmitter
4 Waterpilot FMX21

	Waterpilot adjustment for level measurement
1	Select the "Level" measuring mode via the "Measuring mode" parameter. Menu path: Setup → Measuring mode **⚠ WARNING** **Changing the measuring mode affects the span (URV)** This situation can result in product overflow. ▶ If the measuring mode is changed, the setting for the span (URV) must be checked in the "Setup" operating menu and readjusted if necessary.
2	Select a pressure unit via the "Press eng. unit" parameter, here "mbar" for example. Menu path: Setup → Press. eng. unit
3	The sensor is unpressurized, perform a position adjustment → 📄 44
4	Set the output current to "Fixed" 4.0 mA via the "Current Mode" parameter. Menu path: Expert → Communication → HART config
5	Perform level adjustment (wet or dry)
6	Configure an address ≠0 using the "Bus address" parameter, e.g. bus address = 1. (HART 5.0 master: Range 0 to 15, where address = 0 calls up the "Signaling" setting; HART 6.0 master: Range 0 to 63) Menu path: Expert → Communication → HART config ℹ The output current of the temperature head transmitter used must also be set to "Fixed" and have a HART address other than zero (e.g. address = 2).
7	Switch on burst mode via the "Burst mode" parameter. Menu path: Expert → Communication → HART config
8	Result: by balancing the pressure signal and temperature signal in a suitable HART master (e.g. PLC), a corrected level value can be determined for any medium by using a suitable density function.

9.10.3 Automatic density compensation using an external temperature signal for calculation in the FMX21

Example:

In this example, the FMX21 with an integrated Pt100 is connected to a HART-compliant temperature transmitter via the common communication bus. With this option, the signal of the Pt100 is evaluated with a HART-compliant temperature head transmitter (min. HART 5.0) that supports the burst mode. The change in the water density caused by changing temperatures is automatically factored into the level signal by activating the automatic density compensation.

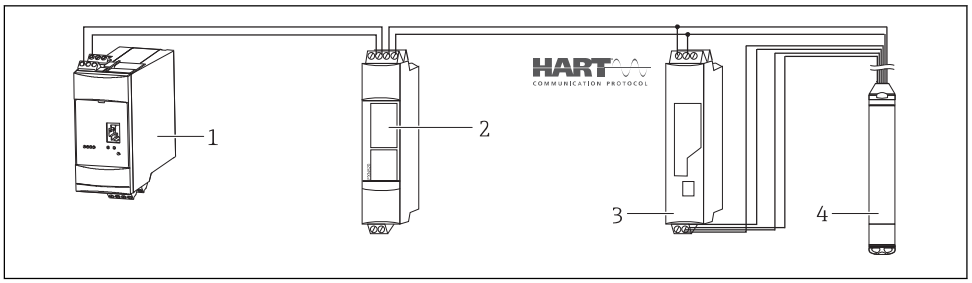

1 *Fieldgate FXA520*
2 *Multidrop Connector FXN520*
3 *HART-compatible temperature transmitter (e.g. TMT82)*
4 *Waterpilot FMX21*

	Configuring the HART-compliant temperature head transmitter (min. HART 5.0) with burst function
	The output current of the temperature transmitter used should be set to "Fixed" and a HART address other than zero (e.g. address = 1) must be set. The burst function must then be switched on with HART command 1. This step should be performed before the procedure described below in order to avoid a HART input error of the FMX21 being output during commissioning.
1	Select the "Level" measuring mode via the "Measuring mode" parameter. Menu path: Setup → Measuring mode **⚠ WARNING** **Changing the measuring mode affects the span (URV)** This situation can result in product overflow. ► If the measuring mode is changed, the setting for the span (URV) must be checked in the "Setup" operating menu and readjusted if necessary.
2	Select a pressure unit via the "Press eng. unit" parameter, here "mbar" for example. Menu path: Setup → Press. eng. unit
3	The sensor is unpressurized, perform a position adjustment → 📄 44
4	Set the "Auto dens. corr." parameter to "External value". Menu path: Expert → Application
5	Perform level adjustment (wet or dry)
	Result: The measured value output by the Waterpilot corresponds to the level in the deep well corrected by means of the density characteristic line of water.

The TMT182 temperature head transmitter is not suitable for this configuration.

9.11 Linearization

9.11.1 Semi-automatic entry of a linearization table

Example:

In this example, the volume in a tank with a conical outlet should be measured in m^3.

Prerequisite:

- The tank can be filled or emptied. The linearization characteristic must rise or fall continuously.
- The "Level" measuring mode has been selected.
- A level calibration has been performed.
- For a description of the parameters mentioned, see the "Description of device parameters" section→ 86.

WARNING

Changing the measuring mode affects the span (URV)

This situation can result in product overflow.

▶ If the measuring mode is changed, the setting for the span (URV) must be checked in the "Setup" operating menu and readjusted if necessary.

	Description	
1	Select the "Semiautom. entry" option via the "Lin. mode" parameter. Menu path: Setup → Extended setup → Linearization → Lin. mode	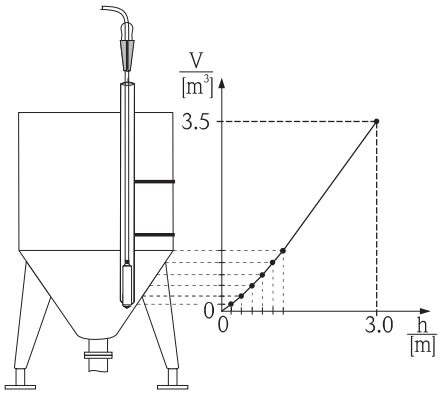 A0018843
2	Select using the "Unit before lin." e.g. m^3. Menu path: Setup → Extended setup → Linearization → Unit after lin.	
3	Fill the tank to the height of the 1st point.	
4	Enter the number of the point in the table using the "Line-numb" parameter e.g. 1. Menu path: Setup → Extended setup → Linearization → Line numb	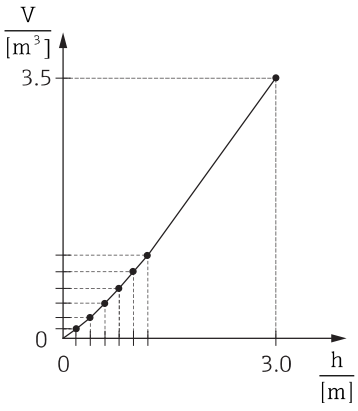 A0031098
	The current level is displayed via the "X-value" parameter. Menu path: Setup → Extended setup → Linearization → X-val	
	Using the "Y-val." parameter, enter the corresponding volume value, here 0 m^3 for example, and confirm the value. Menu path: Setup → Extended setup → Linearization → Y-val	
5	To enter another point in the table, continue filling the tank and select the "Next point" option via the "Edit table" parameter. Enter the next point as explained in Step 4. Menu path: Setup → Extended setup → Linearization → Edit table	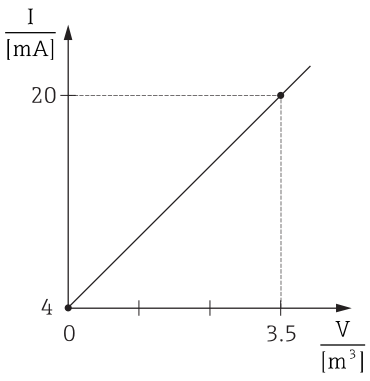 A0031031

	Description	
6	Once all the points have been entered in the table, select the "Activate table" option via the "Lin. mode" parameter. Menu path: Setup → Extended setup → Linearization → Lin. mode	
7	Result: Result: The measured value after linearization is displayed.	

- Error message F510 "Linearization" and alarm current as long as the table is being entered and until the table is activated.
- The lower-range value (= 4mA) is defined by the smallest point in the table. The upper-range value (= 20mA) is defined by the largest point in the table.
- Using the parameters "Set LRV" and "Set URV", you can change the allocation of the volume/mass values to the current values.

9.11.2 Manual entry of a linearization table

Example:

In this example, the volume in a tank with a conical outlet should be measured in m^3.

Prerequisite:

- This is a theoretical calibration, i.e. the points for the linearization table are known.
- The "Level" measuring mode has been selected.
- A level calibration has been performed.
- The linearization characteristic must rise or fall continuously.
- For a description of the parameters mentioned, see the "Description of device parameters" section→ 86.

WARNING

Changing the measuring mode affects the span (URV)

This situation can result in product overflow.

► If the measuring mode is changed, the setting for the span (URV) must be checked in the "Setup" operating menu and readjusted if necessary.

	Description	
1	Select the "Manual entry" option via the "Lin. mode" parameter. Menu path: Setup → Extended setup → Linearization → Lin. mode	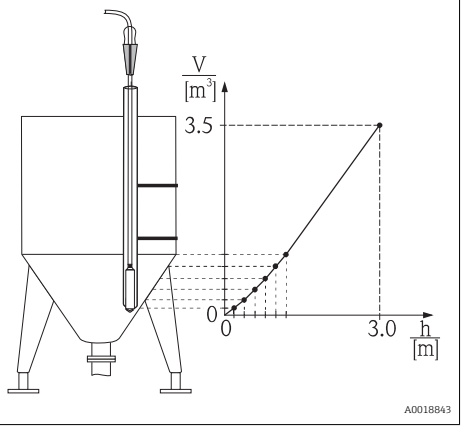
2	Select using the "Unit after lin." e.g. m^3. Menu path: Setup → Extended setup → Linearization → Unit after lin.	

	Description	
3	Enter the number of the point in the table using the "Line-numb" parameter e.g. 1. Menu path: Setup → Extended setup → Linearization → Line numb	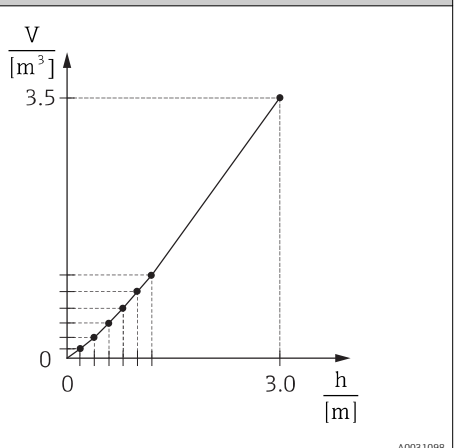 A0031098 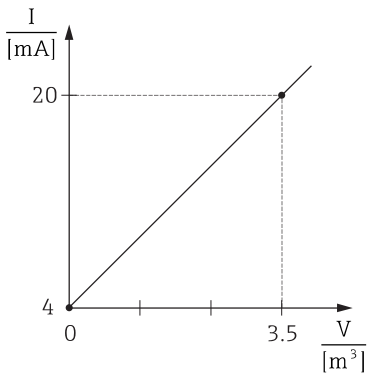 A0031031
	The level is entered via the "X-value" parameter, here 0 m for example. Confirm your entry. Menu path: Setup → Extended setup → Linearization → X-val	
	Using the "Y-val." parameter, enter the corresponding volume value, here 0 m^3 for example, and confirm the value. Menu path: Setup → Extended setup → Linearization → Y-val	
4	To enter another point in the table, select the "Next point" option via the "Edit table" parameter. Enter the next point as explained in Step 3. Menu path: Setup → Extended setup → Linearization → Edit table	
5	Once all the points have been entered in the table, select the "Activate table" option via the "Lin. mode" parameter. Menu path: Setup → Extended setup → Linearization → Lin. mode	
6	Result: Result: The measured value after linearization is displayed.	

- Error message F510 "Linearization" and alarm current as long as the table is being entered and until the table is activated.
- Error message F511/F512 "Linearization" and alarm current as long as the linearization table consists of fewer than 2 points.
- The lower-range value (= 4mA) is defined by the smallest point in the table. The upper-range value (= 20mA) is defined by the largest point in the table.
- Using the parameters "Set LRV" and "Set URV", you can change the allocation of the volume/mass values to the current values.

9.12 Manual entry of a linearization table via operating tool

Using an operating tool based on FDT technology (e.g. FieldCare), you can enter linearization using a module specially designed for this purpose. This provides you with an overview of the selected linearization, even during entry. In addition, it is possible to configure different tank shapes in FieldCare ("Device operation" → "Device functions" → "Additional functions" → "Linearization table" menu).

The linearization table may also be entered manually point by point in the operating tool menu (see Section → 86).

9.13 Backing up or duplicating the device data

The following options are available to you with an operating tool that is based on FDT technology (e.g. FieldCare):
- Storage/recovery of configuration data.
- Duplication of device parameters.
- Transfer of all relevant parameters when replacing electronic inserts.

Use the following parameter for this:

Download select. (visible only in FieldCare)

Navigation Expert → System → Management → Download select.

Write permission Operator/Service engineers/Expert

Description Selection of data packages for up/download function in Fieldcare and PDM.

Prerequisite DIP switch set to "SW" and "Damping" set to "on". If you download using the factory setting "Configuration copy", all parameters required for a measurement will be downloaded. The functionality of the "Electronics replace" setting is reserved for Endress+Hauser Service and can be accessed only if the correct device access code is entered.

Options
- Configuration copy: This option overwrites general configuration parameters with the exception of the serial number, order number, calibration, pos. zero adjust, application and day information.
- Device replacement: This option overwrites general configuration parameters with the exception of the serial number, order number, calibration and position adjustment.
- Electronics replace: This option overwrites general configuration parameters.

Factory setting Configuration copy

9.14 Operation and settings via RIA15

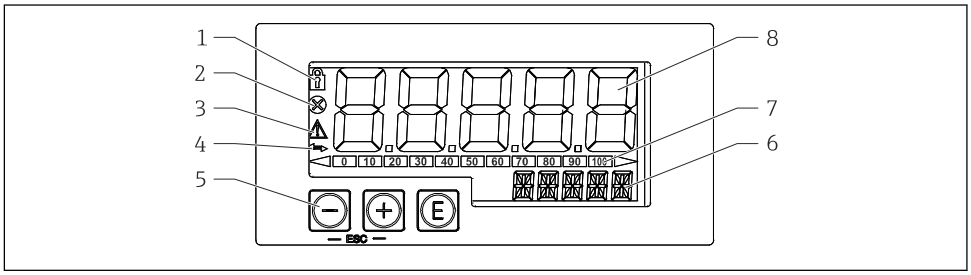

6 Display and operating elements of the process display unit

1 Symbol: operating menu disabled
2 Symbol: error
3 Symbol: warning
4 Symbol: HART communication active
5 Operating keys "-", "+", "E"
6 14-segment display for unit/TAG
7 Bar graph with indicators for under range and over range
8 5-digit 7-segment display for measured value, digit height 17 mm (0.67 in)

The device is operated using three operating keys on the front of the housing. The device setup can be disabled with a 4-digit user code. If the setup is disabled, a padlock symbol appears on the display when an operating parameter is selected.

 A0017716	Enter key; calling up the operating menu, confirming the option/setting parameters in the operating menu
 A0017715	Selecting and setting/changing values in the operating menu; pressing the '-' and '+' keys simultaneously takes the user back up a menu level. The configured value is not saved.
 A0017714	

9.14.1 Operating functions

The operating functions of the process display unit are divided into the following menus. The individual parameters and settings are described in the "Commissioning" section.



If the operating menu is disabled by means of a user code, the individual menus and parameters can be displayed but not changed. To change a parameter, the user code must be entered. As the display unit can only display digits in the 7-segment display and not alphanumeric characters, the procedure for number parameters is different to that for text parameters. If the operating position contains only numbers as parameters, the operating position is displayed in the 14-segment display and the configured parameter is displayed in the 7-segment display. To edit, press the 'E'-button followed by the user code. If the operating position contains text parameters, only the operating position is initially displayed in the 14-segment display. If the 'E' button is pressed again, the configured parameter is displayed in the 14-segment display. To edit, press the '+' button followed by the user code.

Setup (SETUP)	Basic device settings
Diagnostics (DIAG)	Device information, display of error messages
Expert (EXPRT)	Expert settings for device setup. The Expert menu is protected from editing by an access code (default 0000).

9.14.2 Operating modes

The process display unit can be used in two different operating modes:

- 4 to 20 mA mode:
  In this operating mode, the process display unit is incorporated into the 4 to 20 mA current loop and measures the transmitted current. The variable calculated based on the current value and range limits is displayed in digital form on the 5-digit LCD. In addition, the associated unit and a bar graph can be displayed.
- HART mode:
  The display unit is powered via the current loop.
  The FMX21 can be adjusted under the "Level" menu (see operating matrix). The measured value displayed corresponds to the measured level.
  HART communication operates according to the master/slave principle.

For additional information, see BA01170K.

9.14.3 Operating matrix

After power-up:

- ▶ Press the E key twice
  - ↳ The "Level" menu is then available

Using the following operating matrix, a display in percent can be set. To do this, select "Mode" parameter => 4-20 and "Unit" parameter =>%

Setup -> Level (LEVEL) menu					
The LEVEL menu is only visible if the RIA15 has been ordered with the "Level" option and the display unit is operated in the HART mode (MODE = HART). The basic settings for the Waterpilot FMX21 level sensor can be made via the RIA15 with this menu.					
RIA15 parameter		**Corresponds to parameter of FMX21**	**Values (default=bold)**	**Visible with**	**Description**
LEVEL [1]		Level before linearization		Level option MODE = HART FMX21 connected	This menu contains the parameters for configuring the pressure measuring device for hydrostatic level measurement, FMX21. The basic settings for the FMX21 can be made via the RIA15 with this menu. Once the LEVEL menu item is opened, the following parameters are automatically adjusted for easier operation: ▪ Measuring mode: Level ▪ Calibration mode: Dry ▪ Level selection: In pressure ▪ Lin mode: Linear It is possible to reset these parameters to the factory default settings by performing a reset.
	PUNIT	Press. eng. unit	**mbar** [2] **bar** [2] kPa PSI		Use this function to select the unit for pressure
	LUNIT	Output unit	**%** m inch feet		Use this function to select the unit for level
	TUNIT	Temperature unit	**°C** °F K		Use this function to select the unit for temperature
	ZERO	Pos. zero adjust	**NO** YES	Gauge pressure sensor	For performing a position adjustment (gauge pressure sensor). The value 0.0 is assigned to the pressure value present. The current value is also corrected.
	P_LRV	Empty pressure	-1999.9 to 9999.9 Default: Gauge pressure sensor: Sensor LRL Absolute pressure sensor: 0		Pressure empty calibration using keys -,+,E More in-depth description / valid value range: any value in the range indicated [1] [3] Number of decimal places depends on the configured pressure unit.
	P_URV	Full pressure	-1999.9 ... 9999.9 Default: Sensor URL		Pressure full calibration using keys -,+,E More in-depth description / valid value range: any value in the range indicated [1] [3] Number of decimal places depends on the configured pressure unit.
	EMPTY	Empty calib.	-1999.9 to 9999.9 Default: 0		Level empty calibration using keys -,+, E More in-depth description / valid value range: any value in the range indicated [1] [3] Number of decimal places depends on the configured level unit.
	FULL	Full calib.	-1999.9 ... 9999.9 Default: 100		Level full calibration using keys -,+, E More in-depth description / valid value range: any value in the range indicated [1] [3] Number of decimal places depends on the configured level unit.

Setup -> Level (LEVEL) menu					
The LEVEL menu is only visible if the RIA15 has been ordered with the "Level" option and the display unit is operated in the HART mode (MODE = HART). The basic settings for the Waterpilot FMX21 level sensor can be made via the RIA15 with this menu.					
RIA15 parameter		**Corresponds to parameter of FMX21**	**Values (default=bold)**	**Visible with**	**Description**
	LEVEL	Level before linearization	Measured value		Displays the measured level Number of decimal places depends on the configured level unit.
	RESET	Enter reset code	**NO** YES		Reset the FMX21 to factory defaults

1) If the measured value that is read out is too large, it is displayed as "9999.9", for example. To display a valid measured value, the pressure unit (PUNIT) (or level unit (LUNIT)) must be set to suit the measuring range.
2) Default: depends on the sensor nominal range or as per order specifications
3) The values entered for "Empty calib./Full calib.", "Empty pressure/Full pressure" and "Set LRV/Set URV" must be at least 1% apart. The value will be rejected, and a message displayed, if the values are too close together. Further limit values are not checked, i.e. the values entered must be appropriate for the sensor module and the measuring task for the device to be able to measure correctly.

Any additional settings such as linearizations must be made using FieldCare or DeviceCare.

Additional information is available in the RIA15 Operating Instructions BA01170K.

10 Diagnostics and troubleshooting

10.1 Troubleshooting

General errors

Error	Possible cause	Solution
Device is not responding.	Supply voltage does not match the specification on the nameplate.	Apply correct voltage.
	Supply voltage has incorrect polarity.	Reverse polarity of supply voltage.
	Connecting cables are not in contact with the terminals.	Check the connection of the cables and correct if necessary.
Output current < 3.6 mA	Signal line is not wired correctly. Electronics unit is defective.	Check wiring.
Device measures incorrectly.	Configuration error.	Check and correct parameter configuration (see below).
HART communication is not working.	Communication resistor missing or incorrectly installed.	Install the communication resistor (250 Ω) correctly.
	Commubox is connected incorrectly.	Connect Commubox correctly.
	Commubox is not set to "HART".	Set Commubox selector switch to "HART".
RIA15 no display	The polarity of the supply voltage is wrong	Correct the polarity
RIA15 no display	The cables do not contact the terminals properly	Ensure electrical contact between the cable and the terminal
RIA15 no display	RIA15 defective	Replace RIA15
RIA15 start sequence keeps running through	Supply voltage too low	▪ Increase supply voltage ▪ Switch off backlight

10.2 Diagnostic events in the operating tool

10.2.1 Diagnostic message

Faults detected by the self-monitoring system of the measuring device are displayed as a diagnostic message in alternation with the measured value display.

Status signals

The table → 📄 71 lists the messages that may occur. The ALARM STATUS parameter shows the message with the highest priority. The device has four different status information codes according to NE107:

F A0013956	**"Failure"** A device error has occurred. The measured value is no longer valid.
M A0013957	**"Maintenance required"** Maintenance is required. The measured value remains valid.
C A0013959	**"Function check"** The device is in service mode (e.g. during a simulation).
S A0013958	**"Out of specification"** The device is being operated: ▪ Outside its technical specifications (e.g. during warm-up or cleaning). ▪ Outside of the configuration carried out by the user (e.g. level outside configured span)

Diagnostic event and event text

The fault can be identified by means of the diagnostic event.

The event text helps you by providing information on the fault.

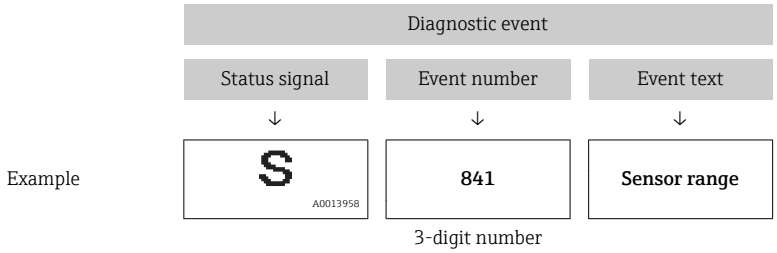

If two or more diagnostic events are pending simultaneously, only the diagnostic message with the highest priority is shown.

Other diagnostic messages that are pending can be viewed in the **Diagnostic list** submenu → 120.

Past diagnostic messages that are no longer pending are shown in the **Event logbook** submenu→ 121.

10.2.2 Diagnostic event in the RIA15

A diagnostic event of the Waterpilot FMX21 is not directly shown in the RIA15. The fault F911 only appears directly on the RIA15 in the event of an Waterpilot FMX21 alarm.

Displaying a FMX21 diagnostic event in the RIA15

1. Navigate to: DIAG/TERR
2. Press E
3. Press +
4. Press E
5. Press + 3 times
6. Press E
   ↳ The diagnostic event from the Waterpilot FMX21 is shown on the RIA15 display.

10.2.3 List of diagnostic events

General messages

Diagnostic event		Reason	Corrective measure
Code	Description		
0	No error	-	-

"F" messages

Diagnostic event		Reason	Corrective measure
Code	Description		
F002	Sensor unknown	Sensor does not suit the device (electronic sensor nameplate).	Contact Endress+Hauser Service
F062	Sensor conn.	▪ Faulty sensor. ▪ Electromagnetic effects are greater than specifications in the technical data. This message appears for a short time only.	▪ Check the sensor module cable ▪ Contact Endress+Hauser Service
F081	Initialization	▪ Faulty sensor. ▪ Electromagnetic effects are greater than specifications in the technical data. This message appears for a short time only.	▪ Check sensor cable ▪ Contact Endress+Hauser Service
F083	Memory content	▪ Faulty sensor. ▪ Electromagnetic effects outside the permitted range. This message appears for a short time only.	▪ Restart the device ▪ Contact Endress+Hauser Service
F140	Working range P	▪ Overpressure and low pressure present. ▪ Electromagnetic effects outside the permitted range. ▪ Faulty sensor.	▪ Check the process pressure ▪ Check sensor range
F261	Electronic module	▪ Main electronics defective. ▪ Fault in the main electronics.	Restart the device
F282	Memory	▪ Fault in the main electronics. ▪ Main electronics defective.	Restart the device
F283	Memory content	▪ Main electronics defective. ▪ Electromagnetic effects are greater than specifications in the technical data. ▪ The supply voltage is disconnected when writing. ▪ An error occurred when writing.	Perform a reset
F411	Up-/download	▪ File is defective. ▪ During the download, the data are not correctly transmitted to the processor, e.g. because of open cable connections, spikes (ripple) on the supply voltage or electromagnetic effects.	▪ Repeat download ▪ Use other file ▪ Perform a reset
F510	Linearization	The linearization table is being edited.	▪ Conclude entries ▪ Select "linear"
F511	Linearization	The linearization table consists of less than 2 points.	▪ Table too small ▪ Correct table ▪ Activate table
F512	Linearization	The linearization table is not monotonic increasing or decreasing.	▪ Table not monotonic ▪ Correct table ▪ Activate table
F841	Sensor range	▪ Overpressure or low pressure present. ▪ Faulty sensor.	▪ Check the pressure value ▪ Contact Endress+Hauser Service
F882	Input signal	External measured value is not received or displays a failure status.	▪ Check the bus ▪ Check source device ▪ Check the setting

"M" messages

Diagnostic event		Reason	Corrective measure
Code	Description		
M002	Sens. unknown	Sensor does not suit the device (electronic sensor nameplate). Device continues measuring.	Contact Endress+Hauser Service
M283	Memory content	▪ Cause as indicated for F283. ▪ Correct measurement can continue as long as you do not need the peakhold indicator function.	Perform a reset
M431	Adjustment	The calibration performed would cause the sensor nominal range to be exceeded or undershot.	▪ Check the measuring range ▪ Check position adjustment ▪ Check the setting
M434	Scaling	▪ Values for calibration (e.g. lower range value and upper range value) are too close together. ▪ Lower-range value and/or upper-range value exceed or fall below the range limits of the sensor. ▪ The sensor was replaced and the customer-specific configuration does not suit the sensor module. ▪ Unsuitable download carried out.	▪ Check the measuring range ▪ Check the setting ▪ Contact Endress+Hauser Service
M438	Data set	▪ The supply voltage is disconnected when writing. ▪ An error occurred when writing.	▪ Check the setting ▪ Restart the device
M882	Input signal	External measured value displays a warning status.	▪ Check the bus ▪ Check the source device ▪ Check the setting

"C" messages

Diagnostic event		Reason	Corrective measure
Code	Description		
C412	Backup in prog.	Downloading.	Wait for download to complete.
C482	Simul. output	Simulation of the current output is switched on, i.e. the device is not measuring at present.	End the simulation
C484	Error simul.	Fault state simulation is switched on, i.e. the device is not measuring at present.	End the simulation
C485	Measure simul.	Simulation is switched on, i.e. the device is not measuring at present.	End the simulation
C824	Process pressure	▪ Overpressure or low pressure present. ▪ Electromagnetic effects outside the permitted range. This message appears for a short time only.	▪ Check the pressure value ▪ Restart the device ▪ Perform a reset

"S" messages

Diagnostic event		Reason	Corrective measure
Code	Description		
S110	Operational range T	▪ High temperature or low temperature present. ▪ Electromagnetic effects outside the permitted range. ▪ Faulty sensor.	▪ Check process temperature ▪ Check the temperature range
S140	Working range P LP/HP	▪ Overpressure or low pressure present. ▪ Electromagnetic effects outside the permitted range. ▪ Faulty sensor.	▪ Check the process pressure ▪ Check sensor range

Diagnostic event		Reason	Corrective measure
Code	Description		
S822	Process temp. LP/HP	▪ The temperature measured in the sensor is higher than the upper nominal temperature of the sensor. ▪ The temperature measured in the sensor is lower than the lower nominal temperature of the sensor.	▪ Check temperature ▪ Check the setting
S841	Sensor range	▪ Overpressure or low pressure present. ▪ Faulty sensor.	▪ Check the pressure value ▪ Contact Endress+Hauser Service
S971	Adjustment	▪ The current is outside the permitted range from 3.8 to 20.5 mA. ▪ The present pressure value is outside the configured measuring range (but within the sensor module range, if applicable). ▪ The calibration performed would cause the sensor nominal range to be exceeded or undershot.	▪ Check the pressure value ▪ Check the measuring range ▪ Check the setting

10.3 Troubleshooting specific to Waterpilot FMX21 with optional Pt100

Error description	Reason	Corrective action
No measuring signal	4 to 20 mA cable not connected correctly	Connect device as per → 📄 26.
	No power supplied via the 4 to 20 mA cable	Check current loop.
	Supply voltage too low (min. 10.5 V DC)	▪ Check supply voltage. ▪ Overall resistance greater than max. load resistance
	Waterpilot is defective	Replace the Waterpilot.
Temperature measured value is inaccurate/incorrect (only for Waterpilot FMX21 with Pt100)	Pt100 connected in 2-wire circuit, cable resistance was not compensated for	▪ Compensate the cable resistance. ▪ Connect Pt100 as 3-wire or 4-wire circuit.

10.4 Troubleshooting specific to TMT182 temperature head transmitter

Error description	Reason	Corrective action
No measuring signal	4 to 20 mA cable not connected correctly	Connect device as per → 📄 26.
	No power supplied via the 4 to 20 mA cable	Check current loop.
	Supply voltage too low (min. 10.5 V DC)	▪ Check supply voltage. ▪ Overall resistance greater than max. load resistance
Failure current ≤ 3.6 mA or ≥ 21 mA	Pt100 not connected correctly	Connect device as per → 📄 26.
	4 to 20 mA cable not connected correctly	Connect device as per → 📄 26.
	Pt100 resistance thermometer defective	Replace the Waterpilot.

Error description	Reason	Corrective action
	Temperature head transmitter defective	Replace the temperature head transmitter.
Measured value is inaccurate/ incorrect	Pt100 connected in 2-wire circuit, cable resistance was not compensated for (for more information see BA00139R)	▪ Compensate the cable resistance. ▪ Connect Pt100 as 3-wire or 4-wire circuit.

10.5 Response of output to errors

The behavior of the current output in case of fault is defined by the following parameters:

- "Alarm behav. P (050)"
- "Output fail mode (190)"
- "Max. alarm curr. (052)"

10.6 Firmware history

Date	Firmware version	Modifications	Documentation
05.2009	01.00.zz	Original firmware.	BA00380P/00/EN/03.09
		Compatible with: ▪ FieldCare version 2.02.00 and higher ▪ Field Communicator DXR375 with Device Rev.: 1, DD Rev.: 1	BA00380P/00/EN/07.09
			BA00380P/00/EN/08.09
			BA00380P/00/EN/13.11
			BA00380P/00/EN/14.13
			BA00380P/00/EN/15.15
			BA00380P/00/EN/16.16
			BA00380P/00/EN/17.16
			BA00380P/00/EN/18.18

11 Maintenance

- Terminal box: Keep the GORE-TEX® filter free from contamination
- FMX21 extension cable: Keep the Teflon filter in the pressure compensation tube free from contamination
- Check the process isolating diaphragm for buildup at suitable intervals.

11.1 Exterior cleaning

Please note the following points when cleaning the device:

- The cleaning agents used should not corrode the surface and the seals.
- Mechanical damage to the process isolating diaphragm, e.g. due to sharp objects, must be avoided.
- Only clean the terminal box with water or with a cloth dampened with very diluted ethanol.

12 Repairs

12.1 General notes

12.1.1 Repair concept

Repairs are not possible.

12.1.2 Replacing a device

Once a complete device has been replaced, the parameters can be transferred back into the device using FieldCare:

Prerequisite: The configuration of the old device was saved previously to the computer using FieldCare.

You can continue to measure without performing a new calibration.

12.2 Spare parts

All the spare parts for the measuring device along with the order code are listed In the *W@M Device Viewer* (www.endress.com/deviceviewer) and can be ordered. If available, users can also download the associated Installation Instructions.

Measuring device serial number:
- Is located on the nameplate of the device.
- Can be read out via the "Serial number" parameter in the "Instrument info" submenu.

12.3 Return

The measuring device must be returned in the event of a factory calibration, or if the wrong device has been ordered or delivered.

As an ISO-certified company and also due to legal regulations, Endress+Hauser is obliged to follow certain procedures when handling any returned products that have been in contact with medium. To ensure swift, safe and professional device returns, please read the return procedures and conditions on the Endress+Hauser website at www.services.endress.com/return-material

▶ Select country.
  ↳ The web site of the responsible sales office opens with all of the relevant information relating to returns.

1. If the desired country is not listed:
   Click on the "Choose your location" link.
   ↳ An overview of Endress+Hauser sales offices and representatives opens.
2. Contact your Endress+Hauser sales office or representative.

12.4 Disposal

When disposing, separate and recycle the device components based on the materials.

13 Overview of the operating menu

Depending on the parameter configuration, not all submenus and parameters are available. Information on this can be found in the parameter description under "Prerequisite".

Setup	Description
Operating mode	→ 89
Press. eng. unit	→ 91
Corrected press.	→ 93
Pos. zero adjust (relative pressure sensor)	→ 90
Calib. offset (absolute pressure sensor)	→ 90
Empty calib. ("Level" measuring mode and "Calibration mode" = wet)	→ 95
Full calib. ("Level" measuring mode and "Calibration mode" = wet")	→ 96
Set LRV ("Pressure" measuring mode)	→ 92
Set URV ("Pressure" measuring mode)	→ 92
Damping	→ 90
Level before Lin ("Level" measuring mode)	→ 98
Pressure af.damp	→ 93

Setup →	Extended setup	Description
	Code definition	→ 86
	Device tag	→ 87
	Operator code	→ 86

Setup →	Extended setup →	Level ("Level" measuring mode)	Description
		Level selection	→ 94
		Output unit	→ 94
		Height unit	→ 94
		Calibration mode	→ 95
		Empty calib.	→ 95
		Empty pressure	→ 95
		Empty height	→ 96
		Full calib.	→ 96
		Full pressure	→ 96
		Full height	→ 97
		Adjust density	→ 97
		Process density	→ 98
		Level before lin	→ 98

Setup →	Extended setup →	Linearization	Description
		Lin. mode	→ 99
		Unit after lin.	→ 99
		Line-numb:	→ 99

Setup →	Extended setup →	Linearization	Description
		X-val	→ 100
		Y-val	→ 100
		Edit table	→ 100
		Tank description	→ 101
		Tank content	→ 101

Setup →	Extended setup →	Current output	Description
		Alarm behav. P	→ 104
		Output fail mode	→ 104
		Max. alarm curr.	→ 104
		Set min. current	→ 105
		Output current	→ 104
		Get LRV (only "Pressure")	→ 105
		Set LRV	→ 105
		Get URV (only "Pressure")	→ 105
		Set URV	→ 106

Diagnosis	Description
Diagnostic code	→ 118
Last diag. code	→ 118
Min. meas. press.	→ 118
Max. meas. press.	→ 118

Diagnosis →	Diagnostics List	Description
	Diagnostic 1	→ 120
	Diagnostic 2	→ 120
	Diagnostic 3	→ 120
	Diagnostics 4	→ 120
	Diagnostics 5	→ 120
	Diagnostics 6	→ 120
	Diagnostics 7	→ 120
	Diagnostics 8	→ 120
	Diagnostics 9	→ 120
	Diagnostics 10	→ 120

Diagnosis →	Event logbook	Description
	Last diag. 1	→ 121
	Last diag. 2	→ 121
	Last diag. 3	→ 121
	Last diag. 4	→ 121
	Last diag. 5	→ 121
	Last diag. 6	→ 121

Diagnosis →	Event logbook	Description
	Last diag. 7	→ 121
	Last diag. 8	→ 121
	Last diag. 9	→ 121
	Last diag. 10	→ 121

Diagnosis →	Instrument Info	Description
	Firmware Version	→ 87
	Serial number	→ 87
	Ext. order code	→ 87
	Order Identifier	→ 88
	Cust. tag number	→ 87
	Device tag	→ 87
	ENP version	→ 88
	Config. counter	→ 119
	LRL sensor	→ 102
	URL sensor	→ 102
	Manufacturer ID	→ 110
	Device type code	→ 110
	Device revision	→ 110

Diagnosis →	Measured values	Description
	Level before lin	→ 98
	Tank content	→ 101
	Pressure measured	→ 92
	Sensor pressure	→ 92
	Corrected press.	→ 93
	Pressure af.damp	→ 93
	Sensor temp.	→ 91

Diagnosis →	Simulation	Description
	Simulation mode	→ 122
	Sim. pressure	→ 122
	Sim. level	→ 122
	Sim. tank cont.	→ 123
	Sim. current	→ 123
	Sim. alarm/warning	→ 123

Diagnosis →	Enter reset code	Description
	Enter reset code	→ 89

13.1 Overview of parameters in the "Expert" menu

The following table lists all of the parameters that can be included in the "Expert" menu. The page reference indicates where a description of the parameter can be found in the manual.

Depending on the device version and the parameter configuration, not all submenus and parameters are available in every device. Information on this can be found in the parameter description under "Prerequisite".

Expert →	System	Description
	Code definition	→ 86
	Operator code	→ 86

Expert →	System→	Instrument Info	Description
		Cust. tag number	→ 87
		Device tag	→ 87
		Serial number	→ 87
		Firmware Version	→ 87
		Ext. order code	→ 87
		Order Identifier	→ 88
		ENP version	→ 88
		Electr.Serial No	→ 88
		Sensor serial no.	→ 88

Expert →	System→	Administration	Description
		Enter reset code	→ 89

Expert →	Measurement	Description
	Operating mode	→ 89

Expert →	Measurement→	Basic Setup	Description
		Pos. zero adjust	→ 90
		Calib. Offset	→ 90
		Damping	→ 90
		Press. eng. unit	→ 91
		Temp. Eng. Unit	→ 91
		Sensor temp.	→ 91

Expert →	Measurement→	Pressure	Description
		Set LRV	→ 92
		Set URV	→ 92
		Pressure measured	→ 92
		Sensor pressure	→ 92
		Corrected press.	→ 93
		Pressure af.damp	→ 93

Expert →	Measurement→	Level	Description
		Level selection	→ 94
		Output unit	→ 94
		Height unit	→ 94
		Calibration mode	→ 95
		Empty calib.	→ 95
		Empty pressure	→ 95
		Empty height	→ 96
		Full calib.	→ 96
		Full pressure	→ 96
		Full height	→ 97
		Density unit	→ 97
		Adjust density	→ 97
		Process density	→ 98
		Level before lin.	→ 98

Expert →	Measurement→	Linearization	Description
		Lin. mode	→ 99
		Unit after lin.	→ 99
		Line-numb:	→ 99
		X-val	→ 100
		Y-val	→ 100
		Edit table	→ 100
		Tank description	→ 101
		Tank content	→ 101

Expert →	Measurement→	Sensor limits	Description
		Lower range limit	→ 102
		URL sensor	→ 102

Expert →	Measurement→	Sensor trim	Description
		Lo trim measured	→ 103
		Hi trim measured	→ 103
		Lo Trim Sensor	→ 103
		Hi Trim Sensor	→ 103

Expert →	Output→	Current output	Description
		Output current	→ 104
		Alarm behav. P	→ 104
		Output fail mode	→ 104
		Max. alarm curr.	→ 104
		Set min. current	→ 105

Expert →	Output→	Current output	Description
		Get LRV ("Pressure" only)	→ 105
		Set LRV	→ 105
		Get URV ("Pressure" only)	→ 105
		Set URV	→ 106
		Startcurrent	→ 106
		Curr. Trim 4 mA	→ 106
		Curr. Trim 20 mA	→ 107
		Offset Trim 4 mA	→ 107
		Offset Trim 20 mA	→ 107

Expert →	Communication→	HART Config	Description
		Burst Mode	→ 108
		Burst Option	→ 108
		Current Mode	→ 108
		Bus Address	→ 108
		Preamble Number	→ 109

Expert →	Communication→	HART Info	Description
		Device type code	→ 110
		Device revision	→ 110
		Manufacturer ID	→ 110
		HART version	→ 110
		Descriptor	→ 110
		HART Message	→ 110
		HART Date	→ 111

Expert →	Communication→	HART Output	Description
		Primary value is	→ 112
		Primary value	→ 112
		Secondary val. is	→ 112
		Secondary value	→ 112
		Third value is	→ 113
		Third value	→ 113
		4th value is	→ 113
		4th value	→ 114

Expert →	Communication→	HART Input	Description
		HART input val.	→ 115
		HART input stat.	→ 115

Expert →	Communication→	HART Input	Description
		HART input unit	→ 115
		HART input form.	→ 115

Expert →	Application		Description
		Electr. Delta P	→ 117
		Fixed ext. value	→ 117
		Auto dens. corr.	→ 117

Expert →	Diagnosis		Description
	Diagnostic code		→ 118
	Last diag. code		→ 118
	Reset Logbook		→ 118
	Min. meas. press.		→ 118
	Max. meas. press.		→ 118
	Reset Peakhold		→ 119
	Operating hours		→ 119
	Config. counter		→ 119

Expert →	Diagnosis→	Diagnostics List	Description
		Diagnostic 1	→ 120
		Diagnostic 2	→ 120
		Diagnostic 3	→ 120
		Diagnostics 4	→ 120
		Diagnostics 5	→ 120
		Diagnostics 6	→ 120
		Diagnostics 7	→ 120
		Diagnostics 8	→ 120
		Diagnostics 9	→ 120
		Diagnostics 10	→ 120

Expert →	Diagnosis→	Event logbook	Description
		Last diag. 1	→ 121
		Last diag. 2	→ 121
		Last diag. 3	→ 121
		Last diag. 4	→ 121
		Last diag. 5	→ 121
		Last diag. 6	→ 121
		Last diag. 7	→ 121
		Last diag. 8	→ 121
		Last diag. 9	→ 121
		Last diag. 10	→ 121

Expert →	Diagnosis→	Simulation	Description
		Simulation mode	→ 122
		Sim. pressure	→ 122
		Sim. level	→ 122
		Sim. tank cont.	→ 123
		Sim. current	→ 123
		Sim. alarm/warning	→ 123

14 Description of device parameters

14.1 Expert → System

Operator code

Write permission Operators/Service engineers/Expert

Description Use this function to enter a code to lock or unlock operation.

User entry
- To lock: Enter a number ≠ the release code (value range: 1 to 9999).
- To unlock: Enter the release code.

Note The release code is "0" in the order configuration. Another release code can be defined in the "Code definition" parameter. If the user has forgotten the release code, the release code can be visible by entering the number "5864".

Factory setting 0

Code definition

Write permission Operators/Service engineers/Expert

Description Use this function to enter a release code with which the device can be unlocked.

Options A number from 0 to 9999

Factory setting 0

14.2 Expert → System → Instrument info

Cust. tag number

Write permission Operators/Service engineers/Expert

Description Enter the device tag, e.g. TAG number (max. 8 alphanumeric characters).

Factory setting No entry or according to order specifications

Device tag

Write permission Operators/Service engineers/Expert

Description Enter the device tag, e.g. TAG number (max. 32 alphanumeric characters).

Factory setting No entry or according to order specifications

Serial number

Write permission Parameter is read only. Only Endress+Hauser Service has write permission.

Description Displays the serial number of the device (11 alphanumeric characters).

Firmware Version

Write permission No write permissions. Parameter is read only.

Description Displays the firmware version.

Ext. order code

Write permission Parameter is read only. Only Endress+Hauser Service has write permission.

Description Displays extended order number.

Factory setting According to order specifications

Order identifier

Write permission Parameter is read only. Only Endress+Hauser Service has write permission.

Description Displays the order identifier.

Factory setting According to order specifications

ENP version

Write permission No write permissions. Parameter is read only.

Description Displays the ENP version
(ENP = electronic nameplate)

Electr.serial no.

Write permission No write permissions. Parameter is read only.

Description Displays the serial number of the main electronics (11 alphanumeric characters).

Sensor serial no.

Write permission No write permissions. Parameter is read only.

Description Displays the serial number of the main electronics (11 alphanumeric characters).

14.3 Expert → System → Management

Enter reset code

Write permission Operators/Service engineers/Expert

Description Reset parameters completely or partially to the factory values or order configuration by entering a reset code, see "Resetting to factory settings (reset)" section.→ 39

Factory setting 0

14.4 Expert → Measurement → Measuring mode

Measuring mode

WARNING

Changing the measuring mode affects the span (URV)
This situation can result in product overflow.
- If the measuring mode is changed, the setting for the span (URV) must be checked in the "Setup" operating menu and readjusted if necessary.

Write permission Operators/Service engineers/Expert

Description Select the measuring mode. The operating menu is structured differently depending on the measuring mode selected.

Options
- Pressure
- Level

Factory setting Pressure or according to order specifications

14.5 Expert → Measurement → Basic setup

Pos. zero adjust

Write permission Operators/Service engineers/Expert

Description Position adjustment – the pressure difference between zero (set point) and the measured pressure need not be known.

Example
- Measured value = 2.2 mbar (0.033 psi)
- You correct the measured value via the "Pos. zero adjust" parameter with the "Confirm" option. This means that you are assigning the value 0.0 to the pressure present.
- Measured value (after position adjustment) = 0.0 mbar
- The current value is also corrected.

Options
- Confirm
- Cancel

Factory setting Cancel

Calib. offset

Write permission Service engineers/Expert

Description Position adjustment – the pressure difference between the set point and the measured pressure must be known.

Example
- Measured value = 982.2 mbar (14.73 psi)
- You correct the measured value with the value entered (e.g. 2.2 mbar (0.033 psi)) via the "Calib. Offset" parameter. This means that you are assigning the value 980.0 (14.7 psi) to the pressure present.
- Measured value (after pos. zero adjust) = 980.0 mbar (14.7 psi)
- The current value is also corrected.

Factory setting 0.0

Damping

Write permission Operators/Service engineers/Expert
(if the "Damping" DIP switch is set to "on")

Description Enter damping time (time constant τ).
The damping affects the speed at which the measured value reacts to changes in pressure.

Input range 0.0 to 999.0 s

Factory setting 2.0 sec. or according to order specifications

Press. eng. unit

Write permission
Operators/Service engineers/Expert

Description
Select the pressure engineering unit. If a new pressure engineering unit is selected, all pressure-specific parameters are converted and displayed with the new unit.

Options
- mbar, bar
- mmH2O, mH2O, inH2O
- ftH2O
- Pa, kPa, MPa
- psi
- mmHg, inHg
- kgf/cm^2

Factory setting
mbar or bar depending on the nominal measuring range of the sensor module, or as per order specifications

Temp. eng. unit

Write permission
Service engineers/Expert

Description
Select the unit for the temperature measured values.

Options
- °C
- °F
- K

Note
The setting affects the unit for the "Sensor temp." parameter.

Factory setting
°C

Sensor temp.

Write permission
No write permissions. Parameter is read only.

Description
Displays the temperature currently measured in the sensor module. This can deviate from the process temperature.

14.6 Expert → Measurement → Pressure

Set LRV

Write permission Operators/Service engineers/Expert

Description Set the pressure value, level or content for the lower current value (4 mA).

Factory setting
- 0.0 % in Level measuring mode
- 0.0 mbar/bar or in accordance with ordering information in Pressure measuring mode

Set URV

Write permission Operators/Service engineers/Expert

Description Set the pressure value, level or content for the upper current value (20 mA).

Factory setting
- 100.0 % in Level measuring mode
- URL Sensor or according to ordering information in Pressure measuring mode

Meas. pressure

Write permission No write permissions. Parameter is read only.

Description Displays the measured pressure after sensor trim, position adjustment and damping.

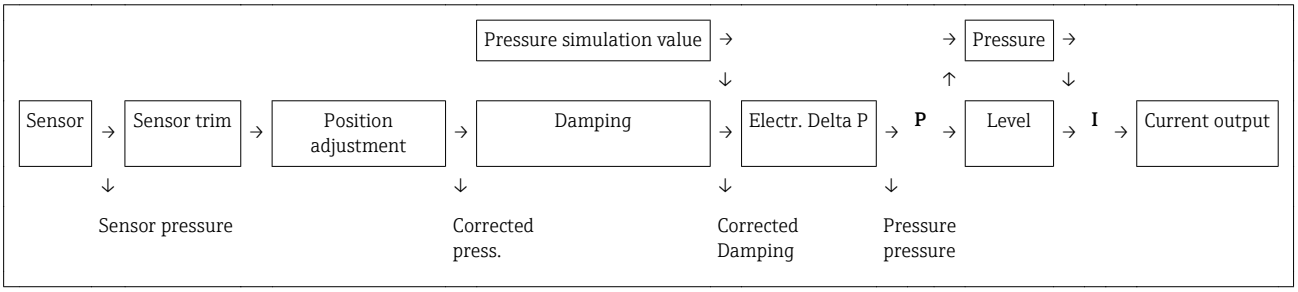

Sensor pressure

Write permission No write permissions. Parameter is read only.

Description Displays the measured pressure before the sensor trim.

Corrected press.

Write permission No write permissions. Parameter is read only.

Description Displays the measured pressure after sensor trim and position adjustment.

Pressure af.damp

Write permission No write permissions. Parameter is read only.

Description Displays the measured pressure after sensor trim, position adjustment and damping.

14.7 Expert → Measurement → Level

Level selection

Write permission Operators/Service engineers/Expert

Description Select the method for calculating the level

Options
- In pressure
  If this option is selected, specify two pressure/level value pairs. The level value is displayed directly in the unit that you select via the "Output unit" parameter.
- In height
  If this option is selected, specify two height/level value pairs. From the measured pressure, the device first calculates the height using the density. This information is then used to calculate the level in the "Output unit" selected using the two value pairs specified.

Factory setting In pressure

Output unit

Description Select the unit for the measured value display for the level before linearization.

Note The selected unit is used only to describe the measured value i.e. when a new output unit is selected, the measured value is not converted.

Example
- Current measured value: 0.3 ft
- New output unit: m
- New measured value: 0.3 m

Options
- %
- mm, cm, dm, m
- ft, inch
- m^3, in^3
- l, hl
- ft^3
- gal, Igal
- kg, t
- lb

Factory setting %

Height unit

Write permission Operators/Service engineers/Expert

Description Select the height unit. The measured pressure is converted to the selected height unit using the "Adjust Density" parameter.

Prerequisite "Level selection" = "In height"

Options
- mm
- m
- in
- ft

Factory setting m

Calibration mode

Write permission Operators/Service engineers/Expert

Description Select the calibration mode.

Options
- Wet
  Wet calibration takes place by filling and emptying the vessel. In the case of two different levels, the level, volume, mass or percentage value entered is assigned to the pressure measured at this point in time ("Empty calib." and "Full calib." parameters).
- Dry
  Dry calibration is a theoretical calibration. For this calibration, you specify two pressure-level value pairs or height-level value pairs via the following parameters: "Empty calib.", "Empty pressure", "Empty height", "Full calib.", "Full pressure", "Full height".

Factory setting Wet

Empty calib.

Write permission Operators/Service engineers/Expert

Description Enter the output value for the lower calibration point (vessel is empty). The unit defined in "Output unit" must be used.

Note
- In the case of wet calibration, the level (e.g. vessel empty or partially filled) must actually be available. The associated pressure is then automatically recorded by the device.
- In the case of dry calibration, the level (vessel empty) does not have to be available. For the "In pressure" level selection, the associated pressure must be entered in the "Empty pressure" parameter. The associated height must be entered in the "Empty height" parameter for the "In height" level selection.

Factory setting 0.0

Empty pressure

Write permission Operators/Service engineers/Expert

Description Enter the pressure value for the lower calibration point (vessel empty). See also "Empty calib.".

Prerequisite
- "Level selection" = In pressure
- "Calibration mode" = Dry -> entry
- "Calibration mode" = Wet -> display

Factory setting 0.0

Empty height

Write permission Operators/Service engineers/Expert

Description Enter the height value for the lower calibration point (vessel empty). The unit is selected via the "Height unit" parameter.

Prerequisite
- "Level selection" = "In height"
- "Calibration mode" = Dry -> entry
- "Calibration mode" = Wet -> display

Factory setting 0.0

Full calib.

Write permission Operators/Service engineers/Expert

Description Enter the output value for the upper calibration point (vessel full). The unit defined in "Output unit" must be used.

Note
- In the case of wet calibration, the level (e.g. vessel full or partially filled) must actually be available. The associated pressure is then automatically recorded by the device.
- In the case of dry calibration, the level (vessel full) does not have to be available. For the "In pressure" level selection, the associated pressure must be entered in the "Full pressure" parameter. The associated height has to be entered in the "Full height" parameter for the "In height" level selection.

Factory setting 100.0

Full pressure

Write permission Operators/Service engineers/Expert

Description Enter the pressure value for the upper calibration point (vessel full). See also "Full calib.".

Prerequisite
- "Level selection" = In pressure
- "Calibration mode" = Dry -> entry
- "Calibration mode" = Wet -> display

Factory setting URL of the sensor module

Full height

Write permission Operators/Service engineers/Expert

Description Enter the height value for the upper calibration point (vessel full). The unit is selected via the "Height unit" parameter.

Prerequisite
- "Level selection" = "In height"
- "Calibration mode" = Dry -> entry
- "Calibration mode" = Wet -> display

Factory setting URL is converted to a level unit

Density unit

Write permission Service engineers/Expert

Description Displays the density unit. The measured pressure is converted to a height using the "Height unit", "Adjust density" and "Process density" parameters.

Options
- g/cm^3
- kg/m^3
- kg/dm^3
- lb/in^3
- lb/ft^3

Factory setting g/cm^3

Adjust density

Write permission Operators/Service engineers/Expert

Description Enter the density of the medium used to perform the calibration. The measured pressure is converted to a height using the "Height unit" and "Adjust density" parameters.
Input: Auto dens. corr. = Off
Display: Auto dens. corr. ≠ Off

Factory setting 1.0

Process density

Write permission Operators/Service engineers/Expert

Description Enter a new density value for density correction. The calibration was carried out with the medium water, for example. Now the vessel is to be used for another medium with another density. The calibration is corrected appropriately by entering the new density value in the "Process Density" parameter.
Input: Auto dens. corr. = Off
Display: Auto dens. corr. ≠ Off

Note If, after completing a wet calibration, you change to dry calibration using the "Calibration mode" parameter, the density for the "Adjust density" and "Process density" parameters must be entered correctly before changing the calibration mode.

Factory setting 1.0

Level before lin.

Write permission No write permissions. Parameter is read only.

Description Displays the level value prior to linearization.

14.8 Expert → Measurement → Linearization

Lin. mode

Write permission Operators/Service engineers/Expert

Description Select the linearization mode.

Options
- Linear
  The level is output without being converted beforehand. "Level before lin" is output.
- Erase table
  The existing linearization table is deleted.
- Manual entry (sets the table to edit mode, an alarm is output):
  The value pairs of the table (X-value and Y-value) are entered manually.
- Semi-automatic entry (sets the table to edit mode, an alarm is output):
  The vessel is emptied or filled in stages in this entry mode. The device automatically records the level value (X-value). The associated volume, mass or % value is entered manually (Y-value).
- Activate table
  The table entered is activated and checked with this option. The device shows the level after linearization.

Factory setting Linear

Unit after lin.

Write permission Operators/Service engineers/Expert

Description Select volume unit, mass, height or % (unit of the Y-value).

Options
- %
- cm, dm, m, mm
- hl
- in^3, ft^3, m^3,
- l
- in, ft
- kg, t
- lb
- gal
- Igal

Factory setting %

Line-numb

Write permission Operators/Service engineers/Expert

Description Enter the number of the current point in the table. Subsequent entries in "X-val" and "Y-val" relate to this point.

Input range 1...32

X-val

Write permission Operators/Service engineers/Expert

Description Enter the X-value (level before linearization) for the specific point in the table and confirm.

Note
- If "Lin. mode" = "Manual", the level value must be entered.
- If "Lin. mode" = "Semiautomatic", the level value is displayed and must be confirmed by entering the paired Y-value.

Y-value

Write permission Operators/Service engineers/Expert

Description Enter the Y-value (value after linearization) for the specific point in the table. The unit is determined by "Unit after lin.".

Note The linearization table must be monotonic (increasing or decreasing).

Edit table

Write permission Operators/Service engineers/Expert

Description Select the function for entering the table.

Options
- Next point: Enter the next point.
- Current point: stay on the current point to correct a mistake for example.
- Last input point: skip back to previous point to correct a mistake for example.
- Insert point: Insert an additional point (see example below).
- Delete point: Delete the current point (see example below).

Example

Add point, in this case between the 4th and 5th point for example
- Select point 5 via the "Line-numb" parameter.
- Select the "Insert point" option via the "Edit table" parameter.
- Point 5 is displayed for the "Line-numb" parameter. Enter new values for the "X-val" and "Y-val" parameters.

Delete point, in this case the 5th point for example
- Select point 5 via the "Line-numb" parameter.
- Select the "Delete point" option via the "Edit table" parameter.
- The 5th point is deleted. All of the following points are pushed up one number i.e. following deletion, the 6th point becomes Point 5.

Factory setting Current point

Tank description

Write permission Operators/Service engineers/Expert

Description Enter the tank description (max. 32 alphanumeric characters)

Tank content

Write permission No write permissions. Parameter is read only.

Description Displays the level value after linearization.

14.9 Expert → Measurement → Sensor limits

LRL sensor

Write permission No write permissions. Parameter is read only.

Description Displays the lower-range limit of the sensor.

URL sensor

Write permission No write permissions. Parameter is read only.

Description Displays the upper-range limit of the sensor.

14.10 Expert → Measurement → Sensor trim

Lo trim measured

Write permission Parameter is read only. Only Endress+Hauser Service has write permission.

Description Displays the reference pressure present to be accepted for the lower calibration point.

Hi trim measured

Write permission Parameter is read only. Only Endress+Hauser Service has write permission.

Description Displays the reference pressure present to be accepted for the upper calibration point.

Lo trim sensor

Write permission No write permissions. Parameter is read only.

Description Sensor module recalibration by entering a target pressure while simultaneously and automatically accepting a reference pressure present for the lower calibration point.

Hi trim sensor

Write permission No write permissions. Parameter is read only.

Description Sensor module recalibration by entering a target pressure while simultaneously and automatically accepting a reference pressure present for the upper calibration point.

14.11 Expert → Output → Current output

Output current

Write permission Operators/Service engineers/Expert

Description Displays the current current value.

Alarm behav. P

Write permission Operators/Service engineers/Expert

Description Configure the response of the current output if sensor module limits are overshot or undershot.

Options
- Warning
  The device continues to measure. An error message is displayed.
- Alarm
  The output signal assumes a value that can be specified by the "Output fail mode" function.

Factory setting Warning

Output fail mode

Write permission Operators/Service engineers/Expert

Description Select Output fail mode. In the event of an alarm, the current assumes the current value specified with this parameter.

Options
- Max: can be set from 21 to 23 mA, see also "High alarm curr."
- Hold: last measured value is held.
- Min: 3.6 mA

Factory setting Max (22 mA)

Max. alarm curr.

Write permission Operators/Service engineers/Expert

Description Enter the current value for maximum alarm current. See also "Output fail mode".

Input range 21 to 23 mA

Factory setting 22 mA

Set min. current

Write permission Operators/Service engineers/Expert

Description Enter lower current limit.
Some switching units accept no current smaller than 4.0 mA.

Options
- 3.8 mA
- 4.0 mA

Factory setting 3.8 mA

Get LRV

Write permission Operators/Service engineers/Expert

Description Set the lower-range value – reference pressure is present at the device. The pressure for the lower current value (4 mA) is present at the device. Use the "Confirm" option to assign the lower current value to the applied pressure value.

Prerequisite: Pressure measuring mode

Options
- Cancel
- Confirm

Factory setting Cancel

Set LRV

Write permission Operators/Service engineers/Expert

Description Set the pressure value, level or content for the lower current value (4 mA).

Factory setting
- 0.0 % in Level measuring mode
- 0.0 mbar/bar or in accordance with ordering information in Pressure measuring mode

Get URV (pressure measuring mode)

Write permission Operators/Service engineers/Expert

Description Set the upper-range value – reference pressure is present at the device. The pressure for the upper current value (20 mA) is present at the device. Use the "Confirm" option to assign the applied pressure value to the upper current value.

Prerequisite: Pressure measuring mode

Options
- Cancel
- Confirm

Factory setting Cancel

Set URV

Write permission Operators/Service engineers/Expert

Description Set the pressure value, level or content for the upper current value (20 mA).

Factory setting
- 100.0 % in Level measuring mode
- URL Sensor or according to ordering information in Pressure measuring mode

Startcurrent

Write permission Service engineers/Expert

Description Entry of the start current. This setting also applies in the HART Multidrop mode.

Options
- 12 mA
- Max alarm (22 mA, cannot be set)

Factory setting 12 mA

Curr. trim 4mA

Write permission Service engineers/Expert

Description Enter the pressure value for the lower point (4 mA) of the current partial regression lines. Using this parameter and "Curr. trim 20 mA", you can adapt the current output to the transmission conditions.

Options Carry out the current trim for the lower point as follows.
- Select the "Current" option in the "Simulation mode" parameter.
- In the "Sim current" parameter, configure the "4 mA value".
- Enter the current value measured using the switching unit in the "Curr. trim 4mA" parameter.

Input range Measured current ±0.2 mA

Factory setting 4 mA

Curr. trim 20mA

Write permission Service engineers/Expert

Description Enter the pressure value for the upper point (20 mA) of the current partial regression lines. Using this parameter and "Curr. Trim 4 mA", you can adapt the current output to the transmission conditions.

Options Carry out the current trim for the upper point as follows:
- Select the "Current" option in the "Simulation mode" parameter.
- In the "Sim current" parameter, configure the value "20 mA".
- Enter the current value measured using the switching unit in the "Curr. trim 20mA" parameter.

Input range Measured current ±1 mA

Factory setting 20 mA

Offset trim 4mA

Write permission Service engineers/Expert

Description Display/enter the difference between 4 mA and the value entered for the parameter "Curr. trim 4mA".

Factory setting 0

Offset trim 20mA

Write permission Service engineers/Expert

Description Display/enter the difference between 20 mA and the value entered for the parameter "Curr. trim 20mA".

Factory setting 0

14.12 Expert→ Communication → HART config.

Burst mode

Write permission Service engineers/Expert

Description Switching burst mode on and off.

Options
- On
- Off

Factory setting Off

Burst option

Write permission Service engineers/Expert

Description You can use this parameter to define which command is sent to the master.

Options
- 1 (HART command 1)
- 2 (HART command 2)
- 3 (HART command 3)
- 9 (HART command 9)
- 33 (HART command 33)

Factory setting 1 (HART command 1)

Current mode

Write permission Service engineers/Expert

Description Configure current mode for HART communication.

Options
- Signaling
  Measured value transmission by the current value
- Fixed
  Fixed current 4.0 mA (Multidrop mode)
  (Measured value transmission via HART digital communication only)

Factory setting Signaling

Bus address

Write permission	Service engineers/Expert
Description	Use this function to enter the address via which a data exchange is to take place via HART protocol. (HART 5.0 master: Range 0 to 15, where address = 0 calls up the "Signaling" setting; HART 6.0 master: Range 0 to 63)
Factory setting	0

Preamble number

Write permission	Service engineers/Expert
Description	Use this function to enter the number of preambles in the HART protocol. (Synchronization of the modem components along a transmission path, each modem component could "swallow" one byte, at least 2 bytes must be the preamble.)
Input range	2...20
Factory setting	5

14.13 Expert→ Communication → HART info

Device type code

Write permission No write permissions. Parameter is read only.

Description Display of the numerical ID of the device
Waterpilot FMX21: 36

Device revision

Write permission No write permissions. Parameter is read only.

Description Display of Device Revision (e.g. 1)

Manufacturer ID

Write permission No write permissions. Parameter is read only.

Description Displays the HART manufacturer ID in a decimal digit format.
Here: 17 (Endress+Hauser)

HART version

Write permission No write permissions. Parameter is read only.

Description Displays HART version .
Waterpilot FMX21: 6

Description

Write permission Service engineers/Expert

Description Enter the tag description (max. 16 alphanumeric characters)

HART message

Write permission Service engineers/Expert

Description Enter the message (max. 32 alphanumeric characters) Upon request from the master, this message is sent via the HART protocol.

HART date

Write permission Service engineers/Expert

Description Enter the date of the last configuration change.

Factory setting DD/MM/YY (date of the final test)

14.14 Expert→ Communication → HART output

Primary value is

Write permission No write permissions. Parameter is read only.

Description Indicates which measured value is transmitted via the HART protocol as the primary process value.

Factory setting Depending on the selected measuring mode, the following measured values can be displayed:
- "Pressure" measuring mode: "Meas. pressure"
- "Level" measuring mode, Lin. mode "Linear": "Level before Lin"
- "Level" measuring mode, Lin. mode "Activate table": "Tank content"

Primary value

Write permission No write permissions. Parameter is read only.

Description The primary value is displayed.

Secondary val.is

Write permission No write permissions. Parameter is read only.

Description Indicates which measured value is transmitted via the HART protocol as the secondary process value. The process value is configured via HART command 51.

Factory setting
- "Pressure" measuring mode: "Corrected press."
- "Level" measuring mode, "Linear" lin. mode: "Meas. pressure"
- "Level" measuring mode, Lin. mode "Activate table": "Level before linearization"

Display Depending on the selected measuring mode, the following measured values can be displayed:
- "Meas. pressure"
- "Sensor pressure"
- "Corrected press."
- "Pressure af.damp"
- "Sensor temp."
- "Level before Lin"
- "Tank content"
- "Process density" (corrected)

Secondary value

Write permission No write permissions. Parameter is read only.

Description The secondary value is displayed.

Third value is

Write permission No write permissions. Parameter is read only.

Description Indicates which measured value is transmitted via the HART protocol as the third process value. The process value is configured via HART command 51.

Factory setting
- "Pressure" measuring mode: "Sensor pressure"
- "Level" measuring mode, "Linear" lin. mode: "Corrected press."
- "Level" measuring mode, "Activate table" lin. mode: "Meas. pressure"

Display Depending on the selected measuring mode, the following measured values can be displayed:
- "Meas. pressure"
- "Sensor pressure"
- "Corrected press."
- "Pressure af.damp"
- "Sensor temp."
- "Level before Lin"
- "Tank content"
- "Process density" (corrected)

Third value is

Write permission No write permissions. Parameter is read only.

Description The third value is displayed.

4th value is

Write permission No write permissions. Parameter is read only.

Description Indicates which measured value is transmitted via the HART protocol as the fourth process value. The process value is configured via HART command 51.

Factory setting
- "Pressure" measuring mode: "Sensor temp"
- "Level" measuring mode, "Linear" lin. mode: "Sensor temp."
- "Level" measuring mode, "Activate table" lin. mode: "Sensor temp."

Display Depending on the selected measuring mode, the following measured values can be displayed:

- "Meas. pressure"
- "Sensor pressure"
- "Corrected press."
- "Pressure af.damp"
- "Sensor temp."
- "Level before Lin"
- "Tank content"
- "Process density" (corrected)

4th value

Write permission No write permissions. Parameter is read only.

Description The fourth value is displayed.

14.15 Expert→ Communication → HART input

HART input value

Write permission No write permissions. Parameter is read only.

Description Display of the HART input value

HART input stat.

Write permission No write permissions. Parameter is read only.

Description Display of the HART input status
Bad / Uncertain / Good

HART input unit

Write permission No write permissions. Parameter is read only.

Description Display of the unit for the HART input value.

Display
- Unknown
- mbar, bar
- mmH2O, ftH2O, inH2O
- Pa, hPa, kPa, MPa
- psi
- mmHg, inHg
- Torr
- g/cm^2, kg/cm^2
- lb/ft^2
- atm
- °C, °F, K, R

Factory setting Unknown

HART input form.

Write permission Operators/Service engineers/Expert

Description Number of decimal places of the displayed input value.

Options

- x.x
- x.xx
- x.xxx
- x.xxxx
- x.xxxxx

Factory setting

x.x

14.16 Expert → Application

Electr. Delta P

Write permission Operators/Service engineers/Expert

Description For switching the Electr. Delta P application off or on with an external or constant value.

Options
- Off
- External value
- Constant

Factory setting Off

Fixed ext. value

Write permission Operators/Service engineers/Expert

Description Use this function to enter the constant value. The value refers to "HART input unit"

Factory setting 0.0

Auto dens. corr.

Write permission Operators/Service engineers/Expert

Description For switching the auto dens. corr. application off or on with an external or internal temperature value.
Before performing a calibration (dry or wet), auto-density compensation must be switched on if this function is to be used. As soon as "Auto dens. corr." is switched on, the field for entering the "Process density" and "Adjust density" is disabled.
The calibration density remains the last value until it is overwritten by a calibration. The process density remains the last value until it is overwritten when the system recalculates the value.
Automatic density compensation is performed for the 0 to 70 °C (32 to 158 °F) temperature range. The density values for water are used for this density compensation.

Prerequisite Level mode

Options
- Off
- Sensor temperature
- External value (only if Off or Constant is selected for Electr. Delta P)

Factory setting
- Off
- On (if the option "IC" was selected in the "Service" order code when ordering)

14.17 Expert → Diagnosis

Diagnostic code

Write permission No write permissions. Parameter is read only.

Description Displays the diagnostic message with the highest priority currently present.

Last diag. code

Write permission No write permissions. Parameter is read only.

Description Displays the last diagnostic message that occurred and was rectified.

Note
- Digital communication: the last message is displayed.
- Use the "Reset logbook" parameter to clear the messages listed in the parameter "Last diag. code".

Reset logbook

Write permission Service engineers/Expert

Description Use this parameter to reset all messages of the parameter "Last diag. code" and the event logbook "Last diag. 1" to "Last diag. 10".

Options
- Cancel
- Confirm

Factory setting Cancel

Min. meas. press.

Write permission No write permissions. Parameter is read only.

Description Displays the lowest pressure value measured (peakhold indicator). You can reset this indicator by means of the "Reset peakhold" parameter.

Max. meas. press.

Write permission No write permissions. Parameter is read only.

Description Displays the highest pressure value measured (peakhold indicator). You can reset this indicator by means of the "Reset peakhold" parameter.

Reset peakhold

Write permission Service engineers/Expert

Description You can reset the "Min. meas. press." and "Max. meas. press." indicators with this parameter.

Options
- Cancel
- Confirm

Factory setting Cancel

Operating hours

Write permission No write permissions. Parameter is read only.

Description Displays the hours of operation. This parameter cannot be reset.

Config. counter

Write permission Operators/Service engineers/Expert

Description Displays the configuration counter.
This counter is increased by one every time a parameter or group is changed. The counter counts up to 65535 and then starts again at zero.

14.18 Expert → Diagnosis → Diagnostic list

Diagnostic 1 (075)
Diagnostic 2 (076)
Diagnostic 3 (077)
Diagnostic 4 (078)
Diagnostic 5 (079)
Diagnostic 6 (080)
Diagnostic 7 (081)
Diagnostic 8 (082)
Diagnostic 9 (083)
Diagnostic 10 (084)

Write permission No write permissions. Parameter is read only.

Description This parameter contains up to ten diagnosis messages that are currently pending, arranged in order of priority.

14.19 Expert → Diagnosis→ Event logbook

Last diag. 1 (085)
Last diag. 2 (086)
Last diag. 3 (087)
Last diag. 4 (088)
Last diag. 5 (089)
Last diag. 6 (090)
Last diag. 7 (091)
Last diag. 8 (092)
Last diag. 9 (093)
Last diag. 10 (094)

Write permission
No write permissions. Parameter is read only.

Description
This parameter contains the last 10 diagnosis messages to occur and be rectified. They can be reset using the "Reset logbook" parameter.
Errors which have occurred multiple times are displayed once only.
Errors may also appear multiple times if another error has occurred in the meantime. The messages are displayed in chronological order.

14.20 Expert → Diagnosis → Simulation

Simulation mode

Write permission Operators/Service engineers/Expert

Description Switch on simulation and select the simulation mode. When changing the measuring mode or the "Lin. mode" level type or when the device is restarted, any simulation that may be running is switched off.

Options
- None
- Pressure →see this table, "Sim. pressure" parameter
- Level, → see this table, "Sim. level" parameter
- Tank content, → see this table, "Sim. tank cont." parameter
- Current, → see this table, "Sim. current" parameter
- Alarm/warning, → see this table, "Sim. error no."

Factory setting None

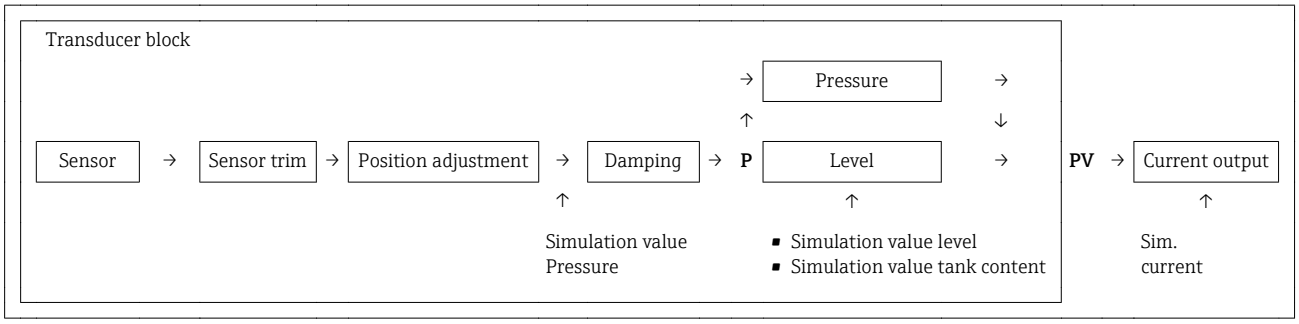

Sim. pressure

Write permission Operators/Service engineers/Expert

Description Enter the simulation value. See also "Simulation mode".

Prerequisite "Simulation mode" = Pressure

Value at switch-on Current pressure measured value

Sim. level

Write permission Operators/Service engineers/Expert

Description Enter the simulation value. See also "Simulation mode".

Prerequisite "Measuring mode" = Level and "Simulation mode" = Level

Value at switch-on Current level measured value

Sim. tank cont.

Write permission Operators/Service engineers/Expert

Description Enter the simulation value. See also "Simulation mode".

Prerequisite "Measuring Mode" = level, Lin mode "Activate table" and "Simulation Mode" = Tank content

Value at switch-on Current tank content

Sim. current

Write permission Operators/Service engineers/Expert

Description Enter the simulation value. See also "Simulation mode".

Prerequisite "Simulation Mode" = Current value

Value at switch-on Current current value

Sim. alarm/warning

Write permission Operators/Service engineers/Expert

Description Enter the simulation value. See also "Simulation mode".

Prerequisite "Simulation Mode" = Alarm/Warning

Factory setting: 484 (Simulation active)

15 Accessories

⚠ CAUTION

Observe the additional information in the individual sections!

- For additional information, see the sections "Mechanical construction" (in Technical Information TI00431P), "Environment", → 134, "Process" → 136 and "Installation" → 18.

Designation	Diagram	Description	Order number / ordering information
Suspension clamp	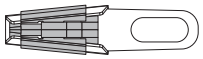 A0030950	For easy installation of the FMX21, Endress+Hauser offers a mounting clamp .	▪ 52006151 ▪ Product Configurator order code for "Accessory enclosed", option "PO"
Terminal box	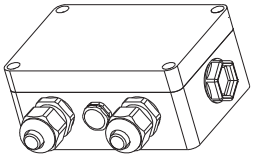 A0030967	Terminal box for terminal strip, temperature head transmitter and Pt100.	▪ 52006152 ▪ Product Configurator order code for "Accessories enclosed", option "PS"
4-terminal strip/terminals	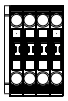 A0030951	4-terminal strip for wiring	52008938
TMT182 temperature head transmitter for FMX21 4 to 20 mA HART	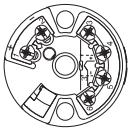 A0030952	PC-programmable (PCP) temperature head transmitter for the conversion of various input signals	▪ 51001023 ▪ Product Configurator order code for "Accessories enclosed", option "PT"
Cable mounting screws	A B 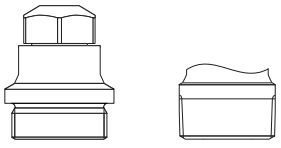 A0030953 *A G 1½" A* *B NPT 1½"*	Endress+Hauser offers a cable mounting screw for easy FMX21 mounting and to seal the measuring aperture.	▪ G 1½" A – 52008264 – Product Configurator order code for "Accessories enclosed", option "PQ" ▪ NPT 1½" – 52009311 – Product Configurator order code for "Accessories enclosed", option "PR"
Additional weight for FMX21 with outer diameter 22 mm (0.87 in) or 29 mm (1.14 in)	 A0030954	Endress+Hauser offers additional weights to prevent sideways movement that results in measuring errors, or to make it easier to lower the device in a guide tube.	▪ 52006153 ▪ Product Configurator order code for "Accessories enclosed", option "PU"
Cable shortening kit	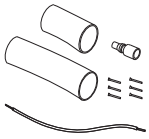 A0030948	The cable shortening kit is used to shorten a cable easily and professionally.	▪ 71222671 ▪ Product Configurator order code for "Accessories enclosed", option "PW"

Designation	Diagram	Description	Order number / ordering information
Testing adapter for FMX21 with outer diameter 22 mm (0.87 in) or 29 mm (1.14 in)	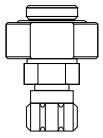 A0030956	Endress+Hauser offers a testing adapter to ease function-testing of the level probes.	▪ 52011868 ▪ Product Configurator order code for "Accessories enclosed", option "PV"
Testing adapter for FMX21 with outer diameter 42 mm (1.65 in)	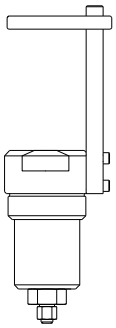 A0030957	Endress+Hauser offers a testing adapter to ease function-testing of the level probes. ▪ Observe the maximum pressure for compressed air hose and maximum overload for level probe ▪ Maximum pressure for the quick coupling piece provided: 10 bar (145 psi)	71110310
RIA15 in the field housing	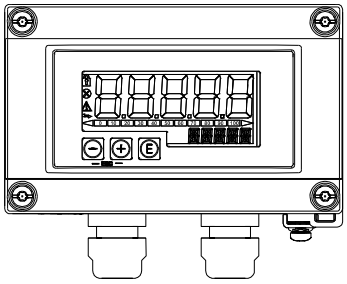 A0036164	Remote display RIA15 non-hazardous	Product structure, feature 620 "Accessory enclosed", option R4 "Remote display RIA15 non-hazardous area, field housing"
		Remote display RIA15 hazardous	Product structure, feature 620 "Accessory enclosed", option R5 "Remote display RIA15 Ex= explosion protection approval, field housing"
HART communication resistor	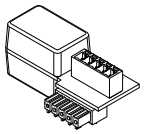 A0036165	HART communication resistor, hazardous / non-hazardous area, for use with RIA15	Product structure, feature 620 "Accessory enclosed", option R6 "HART communication resistor hazardous / non-hazardous area"

15.1 Service-specific accessories

Accessories	Description
DeviceCare SFE100	Configuration tool for HART, PROFIBUS and FOUNDATION Fieldbus field devices Technical Information TI01134S DeviceCare is available for download at www.software-products.endress.com. You need to register in the Endress+Hauser software portal to download the application.
FieldCare SFE500	FDT-based plant asset management tool FieldCare can configure all smart field units in your plant and helps you manage them. By using the status information, FieldCare is also a simple but effective way of checking the status and condition of the field devices. Technical Information TI00028S

16 Technical data

16.1 Input

16.1.1 Measured variable

FMX21 + Pt100 (optional)

- Hydrostatic pressure of a liquid
- Pt100: Temperature

TMT182 temperature head transmitter (optional) for FMX21 4 to 20 mA HART

Temperature

16.1.2 Measuring range

- Customer-specific measuring ranges or calibration that has been preset in the factory
- Temperature measurement of −10 to +70 °C (+14 to +158 °F) with Pt100 (optional)

Relative pressure

Sensor measuring range [bar (psi)]	Lowest calibratable span [1] [bar (psi)]	Vacuum resistance [bar_{abs} (psi_{abs})]	Option [2]
0.1 (1.5)	0.01 (0.15)	0.3 (4.5)	1C
0.2 (3.0)	0.02 (0.3)	0.3 (4.5)	1D
0.4 (6.0)	0.04 (1.0)	0	1F
0.6 (9.0)	0.06 (1.0)	0	1G
1.0 (15.0)	0.1 (1.5)	0	1H
2.0 (30.0)	0.2 (3.0)	0	1K
4.0 (60.0)	0.4 (6.0)	0	1M
10.0 (150) [3]	1.0 (15)	0	1P
20.0 (300) [3]	2.0 (30)	0	1Q

1) Largest turn down that can be configured at the factory: 10:1, higher turn down can be configured on request or in the device (for FMX21 4 to 20 mA HART).
2) Product Configurator order code for "Sensor range"
3) These measuring ranges are not available for the special version with plastic insulation, external diameter of 29 mm (1.14 in).

Absolute pressure

Sensor measuring range [bar (psi)]	Lowest calibratable span [1] [bar (psi)]	Vacuum resistance [bar_{abs} (psi_{abs})]	Option [2]
2.0 (30.0)	0.2 (3.0)	0	2K
4.0 (60.0)	0.4 (6.0)	0	2M

Sensor measuring range [bar (psi)]	Lowest calibratable span [1] [bar (psi)]	Vacuum resistance [bar_{abs} (psi_{abs})]	Option [2]
10.0 (150) [3]	1.0 (15)	0	2P
20.0 (300) [3]	2.0 (30)	0	2Q

1) Largest turn down that can be configured at the factory: 10:1, higher turn down can be configured on request or in the device (for FMX21 4 to 20 mA HART).
2) Product Configurator order code for "Sensor range"
3) These measuring ranges are not available for the special version with plastic insulation, external diameter of 29 mm (1.14 in).

16.1.3 Input signal

FMX21 + Pt100 (optional)

- Change in capacitance
- Pt100: Change in resistance

TMT182 temperature head transmitter (optional) for FMX21 4 to 20 mA HART

Pt100 resistance signal, 4 wire

16.2 Output

16.2.1 Output signal

FMX21 + Pt100 (optional)

- 4 to 20 mA HART with superimposed digital communication protocol HART 6.0, 2-wire for hydrostatic pressure measured value.
  Ordering information: Product Configurator order code for "Output", option "2"
  Options:
  – Max. alarm (factory setting 22mA): can be set from 21 to 23 mA
  – Hold measured value: last measured value is held
  – Min. alarm: 3.6 mA
- Pt100: temperature-dependent resistance value

TMT182 temperature head transmitter (optional) for FMX21 4 to 20 mA HART

4 to 20 mA HART with superimposed digital communication protocol HART 5.0 for temperature measured value, 2-wire

16.2.2 Signal range

3.8 mA to 20.5 mA

16.2.3 Maximum load for FMX21 4 to 20 mA HART

The maximum load resistance depends on the supply voltage (U) and must be determined individually for each current loop, see formula and diagrams for FMX21 and temperature head transmitter. The total resistance resulting from the resistances of the connected devices, the connecting cable and, where applicable, the resistance of the extension cable may not exceed the load resistance value.

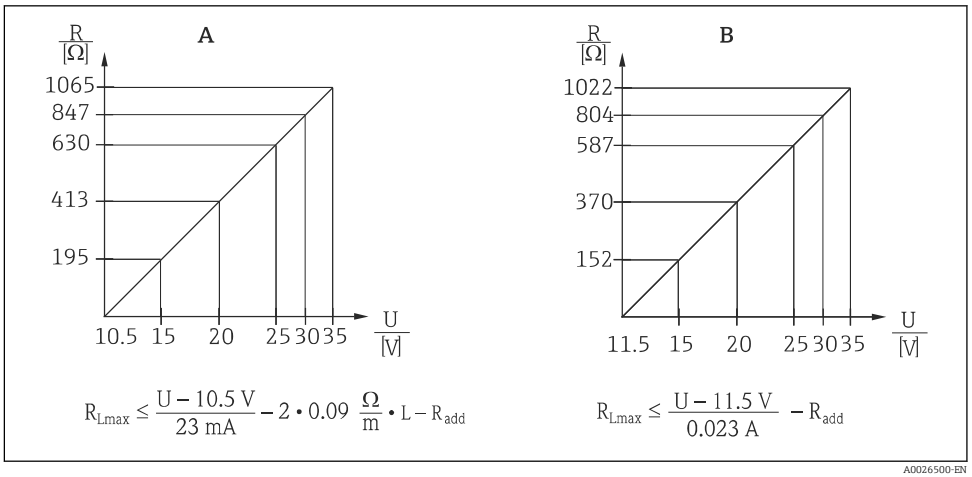

A FMX21 4 to 20 mA HART load chart for estimating the load resistance. Additional resistances, such as the resistance of the extension cable, have to be subtracted from the value calculated as shown in the equation.

B Load diagram for TMT182 temperature head transmitter for estimating the load resistance. Additional resistances must be subtracted from the value calculated as shown in the equation

R_{Lmax} Max. load resistance [Ω]

R_{add} Additional resistances such as resistance of evaluating device and/or display unit, cable resistance [Ω]

U Supply voltage [V]

L Basic length of extension cable [m] (cable resistance per wire 0.09 Ω/m)

- When using the measuring device in hazardous areas, installation must comply with the corresponding national standards and regulations and the Safety Instructions or Installation or Control Drawings (XA).
- When operating via a handheld terminal or via a PC with an operating program, a minimum communication resistance of 250 Ω must be taken into account.

16.2.4 Protocol-specific data for FMX21 4 to 20 mA HART

Manufacturer ID	17 (11 hex)
Device type code	25 (19 hex)
Device revision	01 (01 hex) - SW version 01.00.zz
HART specification	6
DD revision	01
Device description files (DTM, DD)	Information and files under: ▪ www.endress.com ▪ www.fieldcommgroup.org
HART load	Min. 250 Ω
HART device variables	The dynamic variables SV, TV and QV may be assigned to any device variable: **Standard process values for SV, TV (second and third device variable) are dependent on the measuring mode:** ▪ Pressure ▪ Level **Standard process value for QV (fourth device variable) is the sensor temperature:** Temperature **Measured values for PV (first device variable) are dependent on the measuring mode:** ▪ Pressure ▪ Level ▪ Tank content
Supported functions	▪ Burst mode ▪ Additional transmitter status ▪ Device locking ▪ Alternative measuring modes ▪ Catch variable ▪ Long tag

16.3 Performance characteristics

16.3.1 Reference operating conditions

FMX21 + Pt100 (optional)

- As per IEC 60770
- Ambient temperature T_U = constant, in the range of +21 to +33 °C (+70 to +91 °F)
- Humidity φ = constant, in the range of 20 to 80 % rH
- Ambient pressure p_U = constant, in the range of 860 to 1060 mbar (12.47 to 15.37 psi)
- Position of measuring cell constant, vertical in the range of ±1°
- Input of LOW SENSOR TRIM and HIGH SENSOR TRIM for lower range value and upper range value (only for HART)
- Supply voltage constant: 21 V DC to 27 V DC
- Load with HART: 250 Ω
- Pt100: DIN EN 60770, T_U = +25 °C (+77 °F)

TMT182 temperature head transmitter (optional) for FMX21 4 to 20 mA HART

Calibration temperature +25 °C (+77 °F) ±5 K

16.3.2 Reference accuracy

FMX21 + Pt100 (optional)

The reference accuracy comprises the non-linearity after limit point configuration, hysteresis and non-reproducibility in accordance IEC 60770.

Standard version [2]:
Setting ±0.2 %
– to TD 5:1: < 0.2 % of set span
– from TD 5:1 to TD 20:1 ±(0.02 x TD+0.1)

Platinum version [3]:
- Setting ±0.1 % (optional)
  – to TD 5:1: < 0.1 % of set span
  – from TD 5:1 to TD 20:1 ±(0.02 x TD)
- Class B as per DIN EN 60751
  Pt100: max. ±1 K

TMT182 temperature head transmitter (optional) for FMX21 4 to 20 mA HART

- ±0.2 K
- With Pt100: max. ±0.9 K

16.3.3 Resolution

Current output: 1 µA

Reading cycle

HART commands: on average 2 to 3 per second

2) Ordering information: Product Configurator order code for "Reference accuracy", option "G"
3) Ordering information: Product Configurator order code for "Reference accuracy", option "D"

16.3.4 Long-term stability

FMX21 + Pt100 (optional)

- ≤ 0.1 % of URL/year
- ≤ 0.25 % of URL/5 years

TMT182 temperature head transmitter (optional) for FMX21 4 to 20 mA HART

≤ 0.1 K per year

16.3.5 Influence of medium temperature

- Thermal change in the zero output and the output span:
  0 to +30 °C (+32 to +86 °F): < (0.15 + 0.15 x TD)% of set span
  −10 to +70 °C (+14 to +158 °F): < (0.4 + 0.4 x TD)% of set span
- Temperature coefficient (T_K) of the zero output and the output span
  −10 to +70 °C (+14 to +158 °F): 0.1 % / 10 K of URL

16.3.6 Warm-up period

FMX21 + Pt100 (optional)

- FMX21: < 6 s
- Pt100: 300 s

TMT182 temperature head transmitter (optional) for FMX21 4 to 20 mA HART

4 s

16.3.7 Response time

FMX21 + Pt100 (optional)

- FMX21: 400 ms (T90 time), 500 ms (T99 time)
- Pt100: 160 s (T90 time), 300 s (T99 time)

16.4 Environment

16.4.1 Ambient temperature range

FMX21 + Pt100 (optional)

- With external diameter of 22 mm (0.87 in) and 42 mm (1.65 in):
  −10 to +70 °C (+14 to +158 °F) (= medium temperature)
- With external diameter of29 mm (1.14 in):
  0 to +50 °C (+32 to +122 °F) (= medium temperature)

Cable

(when mounted in a fixed position)
- With PE: −30 to +70 °C (−22 to +158 °F)
- With FEP: −40 to +70 °C (−40 to +158 °F)
- With PUR: −40 to +70 °C (−40 to +158 °F)

Terminal box

−40 to +80 °C (−40 to +176 °F)

TMT182 temperature head transmitter (optional) for FMX21 4 to 20 mA HART

−40 to +85 °C (−40 to +185 °F)

Temperature head transmitter 2-wire, configured for a measuring range of −20 to +80 °C (−4 to +176 °F). This configuration offers a temperature range of 100 K which can be easily mapped. Please note that the Pt100 resistance temperature detector is suitable for a temperature range of −10 to +70 °C (14 to +158 °F)

The TMT182 temperature head transmitter is not designed for use in hazardous areas incl. CSA GP.

16.4.2 Storage temperature range

FMX21 + Pt100 (optional)

−40 to +80 °C (−40 to +176 °F)

Cable

(when mounted in a fixed position)
- With PE: −30 to +70 °C (−22 to +158 °F)
- With FEP: −30 to +80 °C (−22 to +176 °F)
- With PUR: −40 to +80 °C (−40 to +176 °F)

Terminal box

−40 to +80 °C (−40 to +176 °F)

TMT182 temperature head transmitter (optional) for FMX21 4 to 20 mA HART

−40 to +100 °C (−40 to +212 °F)

16.4.3 Degree of protection

FMX21 + Pt100 (optional)

IP68, permanently hermetically sealed at 20 bar (290 psi) (~200 m H_2O)

Terminal box (optional)

IP66, IP67

TMT182 temperature head transmitter (optional) for FMX21 4 to 20 mA HART

IP00, condensation permitted

16.4.4 Electromagnetic compatibility (EMC)

FMX21 + Pt100 (optional)

- EMC in accordance with all relevant requirements of EN 61326 series. For details, refer to the Declaration of Conformity.
- Maximum deviation: < 0.5 % of span.

TMT182 temperature head transmitter (optional) for FMX21 4 to 20 mA HART

EMC in accordance with all relevant requirements of EN 61326 series. For details, refer to the Declaration of Conformity.

16.4.5 Overvoltage protection

FMX21 + Pt100 (optional)

- Integrated overvoltage protection as per EN 61000-4-5 (500 V symmetrical/1000 V asymmetrical)
- Overvoltage protection ≥ 1.0 kV, external if necessary

TMT182 temperature head transmitter (optional) for FMX21 4 to 20 mA HART

Provide overvoltage protection, externally if necessary (see Technical Information).

16.5 Process

16.5.1 Medium temperature range

FMX21 + Pt100 (optional)

- With external diameter of 22 mm (0.87 in) and 42 mm (1.65 in):
  −10 to +70 °C (+14 to +158 °F)
- With external diameter of 29 mm (1.14 in):
  0 to +50 °C (+32 to +122 °F)

TMT181 temperature head transmitter (optional) for FMX21 4 to 20 mA HART

−40 to +85 °C (−40 to +185 °F)

(= ambient temperature), install temperature head transmitter outside the medium.

Temperature head transmitter 2-wire, configured for a measuring range of −20 to +80 °C (−4 to +176 °F). This configuration offers a temperature range of 100 K which can be easily mapped. Please note that the Pt100 resistance temperature detector is suitable for a temperature range of −10 to +70 °C (14 to +158 °F)

The TMT182 temperature head transmitter is not designed for use in hazardous areas incl. CSA GP.

16.5.2 Medium temperature limit

FMX21 + Pt100 (optional)

With external diameter of 22 mm (0.87 in) and 42 mm (1.65 in):
−20 to +70 °C (−4 to +158 °F)

In hazardous areas incl. CSA GP, the medium temperature limit is −10 to +70 °C (+14 to +158 °F).

With external diameter of29 mm (1.14 in): 0 to +50 °C (+32 to +122 °F)

The FMX21 may be operated in this temperature range. The specification values, such as accuracy, may be exceeded.

16.5.3 Pressure specifications

⚠ WARNING

The maximum pressure for the measuring device depends on the lowest-rated element with regard to pressure.

- For pressure specifications, see the "Measuring range" section and the "Mechanical construction" section.
- The measuring device must be operated only within the specified limits!
- The Pressure Equipment Directive (2014/68/EU) uses the abbreviation "PS". The abbreviation "PS" corresponds to the MWP (maximum working pressure) of the measuring device.
- MWP (maximum working pressure): The MWP (maximum working pressure) is specified on the nameplate. This value refers to a reference temperature of +20 °C (+68 °F) and may be applied to the device for an unlimited time. Observe temperature dependency of the MWP.
- OPL (Over Pressure Limit = sensor overload limit): The test pressure corresponds to the over pressure limit of the sensor and may only be applied for a limited time period to ensure measurement within specification and in order to avoid permanent damage. In the case of sensor range and process connections where the over pressure limit (OPL) of the process connection is smaller than the nominal value of the sensor, the device is set at the factory, at the very maximum, to the OPL value of the process connection. If you want to use the entire sensor range, select a process connection with a higher OPL value.
- avoid steam hammering! Steam hammering can cause zero point drifts. Recommendation: Residue (such as condensation or drops of water) can remain on the process isolating diaphragm after CIP cleaning and lead to local steam hammering if steam cleaning is performed again. In practice, drying the process isolating diaphragm (e.g. by blowing) has proved to prevent steam hammering.

16.6 Additional technical data

See Technical Information TI00431P.

Index

0 ... 9
4th value 114
4th value is 113

A
Accessories
Service-specific 125
Adjust density 97
Alarm behav. P 104
Application 10
Auto dens. corr. 117

B
Burst Mode 108
Burst Option 108
Bus Address 108

C
Calib. Offset 45, 90
Calibration mode 95
CE mark (declaration of conformity) 11
Cleaning 76
Code definition 86
Config. counter 119
Configuration of a level measurement 48
Configuration of a pressure measurement 46
Configure measuring mode 43
Configure pressure engineering unit 44
Configuring level measurement 48
Configuring pressure measurement 46
Corrected press. 93
Curr. trim 4mA 106
Curr. trim 20mA 107
Current Mode 108
Cust. tag number 87

D
Damping 45, 90
Declaration of Conformity 11
Density correction 117
Density unit 97
Description 110
Designated use 10
Device replacement 77
Device revision 110
Device tag 87
Device type code 110
DeviceCare 36
Diagnostic 1 (075) 120
Diagnostic 2 (076) 120
Diagnostic 3 (077) 120
Diagnostic 4 (078) 120
Diagnostic 5 (079) 120
Diagnostic 6 (080) 120
Diagnostic 7 (081) 120
Diagnostic 8 (082) 120
Diagnostic 9 (083) 120
Diagnostic 10 (084) 120
Diagnostic code 118
Diagnostic event 71
Diagnostic event in the RIA15 71
Diagnostic events 70
Diagnostic message 70
Diagnostics
Symbols 70

E
Edit table 100
Electr. Delta P 117
Electr.serial no. 88
Empty calib. 95
Empty height 96
Empty pressure 95
ENP version 88
Enter reset code 89
Event text 71
Ext. order code 87
Exterior cleaning 76

F
Firmware Version 87
Fixed ext. value 117
Full calib. 96
Full height 97
Full pressure 96

G
Get LRV 105
Get URV (pressure measuring mode) 105

H
HART Date 111
HART input form. 115
HART input stat. 115
HART input unit 115
HART input val. 115
HART Message 110
HART version 110
HART® protocol
Operating tools 41
Process variables 41
Version data for the device 41
Height unit 94
Hi trim measured 103
Hi trim sensor 103

L
Last diag. 1 (085) 121
Last diag. 2 (086) 121
Last diag. 3 (087) 121
Last diag. 4 (088) 121
Last diag. 5 (089) 121
Last diag. 6 (090) 121
Last diag. 7 (091) 121

Last diag. 8 (092) 121
Last diag. 9 (093) 121
Last diag. 10 (094) 121
Last diag. code 118
Level before lin. 98
Level selection 94
Lin. mode 99
Line-numb. 99
Lo trim measured 103
Lo trim sensor 103
Local display
see Diagnostic message
see In alarm condition
LRL sensor 102

M

Maintenance 76
Manufacturer ID 110
Max. alarm curr. 104
Max. meas. press. 118
Media 10
Menu
Overview 78, 81
Parameter description 86
Min. meas. press. 118

N

Nameplate 15

O

Offset trim 4mA 107
Offset trim 20mA 107
Operating hours 119
Operating menu
Overview 78, 81
Parameter description 86
Operating mode 89
Operational safety 10
Operator code 86
Order Identifier 88
Output current 104
Output fail mode 104
Output unit 94

P

Pos. zero adjust 90
Preamble Number 109
Press. eng. unit 91
Pressure af.damp 93
Pressure measured 92
Primary value 112
Primary value is 112
Process density 98
Product safety 11

R

Repair concept 77
Replacing a device 77
Reset Logbook 118
Reset Peakhold 119

S

Safety Instructions
Basic 10
Safety Instructions (XA) 7
Secondary val. is 112
Secondary value 112
Sensor pressure 92
Sensor serial no. 88
Sensor temp. 91
Serial number 87
Set LRV 92, 105
Set min. current 105
Set URV 92, 106
Sim. alarm/warning 123
Sim. current 123
Sim. level 122
Sim. pressure 122
Sim. tank cont. 123
Simulation mode 122
Spare parts 77
Nameplate 77
Staff
Requirements 10
Startcurrent 106
Status signals 70

T

Tank content 101
Tank description 101
Temp. Eng. Unit 91
Third value 113
Third value is 113
Troubleshooting 70

U

Unit after lin. 99
URL sensor 102
Use of the measuring devices
Borderline cases 10
Incorrect use 10
Using measuring device
see Designated use

W

W@M Device Viewer 77
Workplace safety 10

X

X-value 100

Y

Y-value 100



www.addresses.endress.com

Endress+Hauser

People for Process Automation

Section 3.2.3

EQ Tank Level Switch



Flygt ENM-10 liquid level regulators

TRIED-AND-TRUE SIMPLICITY

FLYGT
a xylem brand

So simple, yet so reliable

Proper level regulation is critical for operational reliability. Lack of proper regulation can cause improper operation, pump damage or, in the worst case, overflow that results in environmental and economic consequences. With over a decade of experience and countless satisfied users, the natural choice for level regulation is the Flygt ENM-10.

Simple, reliable and effective
The Flygt ENM-10 level regulators are the ideal choice for most level control applications, such as wastewater pumping stations and ground water or drainage pumping. When the liquid level reaches the regulator, the bulb tilts, activating the internal microswitch, which starts or stops a pump or triggers an alarm device.

Practically maintenance free
The outer casing of Flygt ENM-10 level regulators are resistant to most aggressive liquids. The cable material prevents buildup of deposits and other impurities. Rather than floating on the surface, ENM-10 hangs immersed in the liquid. This prevents the cables from tangling when several regulators are used.

Xylem testing indicates Flygt ENM-10 level regulators last several times longer than most standard level regulators. This ensures reliable operation and a low degree of maintenance, thereby keeping service costs down to a minimum over the life cycle.

Environmentally friendly
The Flygt ENM-10 level regulator contains no harmful or toxic materials such as lead or mercury and does not require the use of any adhesives. All plastic components are welded and screwed together.



In a two-pump station, four level regulators are generally used. One is positioned at the stop level, one at each pump's start level, and the fourth regulator is used to trigger a high level alarm.

Operating principle

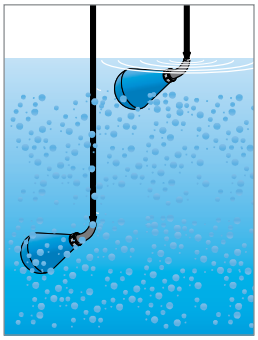

1. Media to be pumped reaches the pre-set level and tilts the upper regulator, which signals the start of the pumping process.

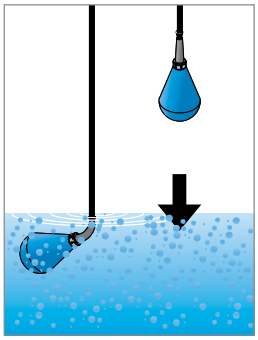

2. The pumping process drains the media.

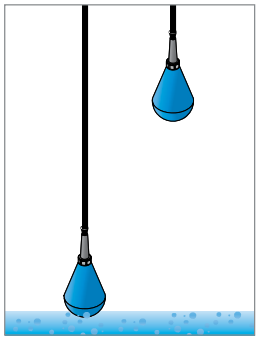

3. The pumping process stops when the lower regulator returns to the vertical position and signals a stop.

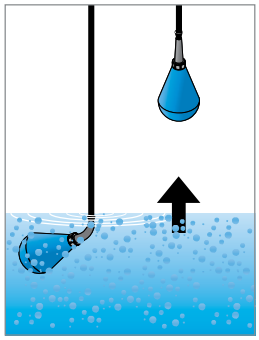

4. The media level begins to rise, starting the process again.

With a variety of installations in mind
The Flygt liquid level regulator comes in two main versions, standard and Ex-approved. Depending upon the media and type of installation, the Flygt ENM-10 is available for a broad range of liquid densities and with many cable lengths from which to choose.

Features


Standard


Ex

Watertight cable
Encases and protects power supply to the microswitch.

Operational mechanism
Initiates pump start and pump stop through the microswitch when the Flygt ENM-10 tilts or resumes its original position. Delivers reliable performance under all operating conditions including the slow movements often found in stormwater or rainwater installations.

Bending relief (protective sleeve)
Enables watertight, oil-resistant cable entry.

Microswitch
Provides proven quality, performance and reliability for all operating conditions, including switching low currents.

Accessories



Flygt ENM-10 cable holder
Dedicated accessory that reduces the cable wear. Sold separately or as package with the Flygt ENM-10.

Flygt Ex safety barrier
This two-channel safety barrier protects against overvoltage for liquid level regulators. Required when Flygt ENM-10s are to be used in Ex-installations.

Technical data

	Standard version	Ex-approved version
Cable lengths	6, 13, 20, 30 or 50 m* (20, 42, 65,100 or 167 ft.)	6, 13, or 20 m (20, 42 or 65 ft.)
Liquid density	Between 0.95 and 1.10 g/cm³*	Between 0.95 and 1.10 g/cm³
Materials	Body: Polypropylene Bending relief: EPDM rubber Cable: Special compound PVC & NBR/PVC	Body: Conductive polypropylene/carbon black Bending relief: NBR/PVC rubber Cable: NBR/PVC
Liquid temperature	Min. 0°C (32°F) Max. 60°C (140°F)	Min. 0°C (32°F) Max. 60°C (140°F)
Ingress protection	IP 68	IP 68
Electrical range (microswitch)	Interrupting capacity: AC: 250 V/10 A resistive load AC: 250 V/3 A inductive load at cosϕ = 0.5 DC: 24 V/ 10mA min., 6 A max. Note that local regulations may limit the voltage.	Interrupting capacity: AC: 250 V/10 A resistive load AC: 250 V/3 A inductive load at cosϕ = 0.5 DC: 24 V/ 10mA min., 6 A max. Note that local regulations may limit the voltage.
Approvals	CE, CSA, SEMKO, NEMKO, DEMKO	CE, SEMKO, NEMKO, DEMKO, ATEX/IECEX

*Other cable lengths and liquid densities available upon request.
The Flygt ENM-10 is a part of the Level Sensor product range from Xylem, covering most level measuring needs.

Xylem [ˈzīləm]

1) The tissue in plants that brings water upward from the roots
2) A leading global water technology company

We're 12,000 people unified in a common purpose: creating innovative solutions to meet our world's water needs. Developing new technologies that will improve the way water is used, conserved, and re-used in the future is central to our work. We move, treat, analyze, and return water to the environment, and we help people use water efficiently, in their homes, buildings, factories and farms. In more than 150 countries, we have strong, long-standing relationships with customers who know us for our powerful combination of leading product brands and applications expertise, backed by a legacy of innovation.

For more information on how Xylem can help you, go to xyleminc.com

xylem
Let's Solve Water

1319 . Flygt ENM 10 . 1 . Master . 1 . 20120103

Installation, Operation, and
Maintenance Manual

899752_4.0



ENM 10

Table of Contents

1 Introduction and Safety....2
1.1 Introduction....2
1.2 Safety terminology and symbols....2
1.3 User safety....3
1.3.1 Power lock-out....3
1.3.2 Qualification of personnel....3
1.4 End of life product disposal....4
1.5 Spare parts....4
1.6 Warranty....4
1.7 Support....4

2 Product Description....5
2.1 Introduction....5
2.2 Process description....5
2.3 Technical data....5
2.4 Electrical data....6
2.5 Approvals and standards....6

3 Mechanical Installation....7
3.1 Precautions....7
3.2 General....7

4 Electrical Installation....8
4.1 Precautions....8
4.2 Wiring diagrams....9
4.3 Connection for audible or visible alarm....10

5 Maintenance....11
5.1 General....11

1 Introduction and Safety

1.1 Introduction

Purpose of the manual

The purpose of this manual is to provide necessary information for installation, operation, and maintenance of the unit.

Read and keep the manual

Save this manual for future reference, and keep it readily available at the location of the unit.



CAUTION:

Read this manual carefully before installing and using the product. Improper use of the product can cause personal injury and damage to property, and may void the warranty.

The equipment, and its functioning, may be impaired if used in a manner not specified by the manufacturer.

Intended use



WARNING:

Operating, installing, or maintaining the unit in any way that is not covered in this manual could cause death, serious personal injury, or damage to the equipment and the surroundings. This includes any modification to the equipment or use of parts not provided by Xylem. If there is a question regarding the intended use of the equipment, please contact a Xylem representative before proceeding.

1.2 Safety terminology and symbols

About safety messages

It is extremely important that you read, understand, and follow the safety messages and regulations carefully before handling the product. They are published to help prevent these hazards:

- Personal accidents and health problems
- Damage to the product and its surroundings
- Product malfunction

Hazard levels

Hazard level		Indication
	DANGER:	A hazardous situation which, if not avoided, will result in death or serious injury
	WARNING:	A hazardous situation which, if not avoided, could result in death or serious injury
	CAUTION:	A hazardous situation which, if not avoided, could result in minor or moderate injury

Hazard level	Indication
NOTICE:	Notices are used when there is a risk of equipment damage or decreased performance, but not personal injury.

Special symbols

Some hazard categories have specific symbols, as shown in the following table.

Electrical hazard	Magnetic fields hazard
 Electrical Hazard:	 CAUTION:

1.3 User safety

Introduction

All government regulations, local health and safety directives must be observed.

Prevent danger due to electricity

All danger due to electricity must be avoided. Electrical connections must always be carried out in compliance with the following:

- The standard connections shown in the product documentation that is delivered together with the product
- All international, national, state, and local regulations. (For details, consult the regulations of your local electricity supplier.)

For more information about requirements, see sections dealing specifically with electrical connections.

1.3.1 Power lock-out



DANGER: Electrical Hazard

Before starting work on the unit, make sure that the unit and the control panel are isolated from the power supply and cannot be energized. This applies to the control circuit as well.

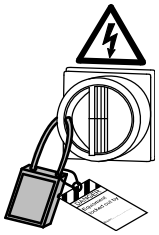

1.3.2 Qualification of personnel



WARNING: Electrical Hazard

Risk of electrical shock or burn. A certified electrician must supervise all electrical work. Comply with all local codes and regulations.

All work on the product must be carried out by certified electricians or Xylem authorized mechanics.

Xylem disclaims all responsibility for work done by untrained, unauthorized personnel.

1.4 End of life product disposal

Handle and dispose of all waste in compliance with local laws and regulations.

EU only: Correct disposal of this product – WEEE Directive on waste electrical and electronic equipment

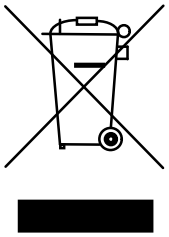

This marking on the product, accessories or literature indicates that the product should not be disposed of with other waste at the end of its working life.

To prevent possible harm to the environment or human health from uncontrolled waste disposal, please separate these items from other types of waste and recycle them responsibly to promote the sustainable reuse of material resources.

Waste from electrical and electronic equipment can be returned to the producer or distributor.

EU only: Correct disposal of batteries in this product

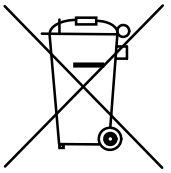

This marking on the battery, manual or packaging indicates that the batteries in this product should not be disposed of with other waste at the end of its working life. Where marked, the chemical symbols Hg, Cd or Pb indicate that the battery contains mercury, cadmium or lead above the reference levels in EC Directive 2006/66. If batteries are not properly disposed of, these substances can cause harm to human health or the environment.

To protect natural resources and to promote material re-use, please separate batteries from other types of waste and recycle them through your local, free battery return system.

1.5 Spare parts



CAUTION:

Only use the manufacturer's original spare parts to replace any worn or faulty components. The use of unsuitable spare parts may cause malfunctions, damage, and injuries as well as void the warranty.

1.6 Warranty

For information about warranty, see the sales contract.

1.7 Support

Xylem only supports products that have been tested and approved. Xylem does not support unapproved equipment.

2 Product Description

2.1 Introduction

Product description

The product is the simplest possible method for level control. A mechanical switch in a plastic casing, freely suspended at the desired height from its own cable. When the liquid level reaches the regulator, the casing will tilt and the mechanical switch will close or break the circuit, thereby starting or stopping a pump or actuating an alarm device. No wear, no maintenance. In sewage pumping stations, for ground water and drainage pumping – in fact, for most level control applications – the product is the ideal solution.

Liquid density

The product is available in different versions for different liquid densities.

Temperature limit

The regulator can withstand up to 60°C (140°F).

Manual coverage

This manual is applicable for the version shown in the following table:

Version	Casing
Standard	Red

2.2 Process description

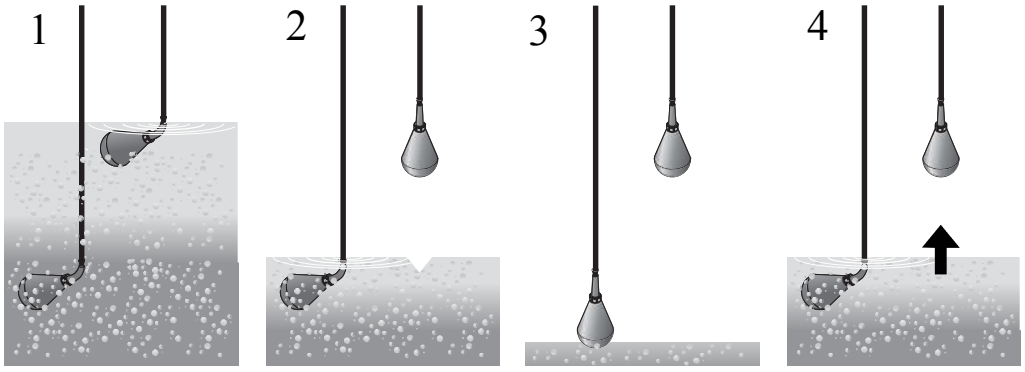

WS004996A

1. When the pumped media reaches a predetermined level, the upper level regulator tips over to horizontal position and the pump starts to drain the basin.
2. The basin is drained of fluid.
3. The pump stops when the lower level regulator returns to the vertical position.
4. The basin fills up again. The process restarts.

2.3 Technical data

Materials

Denomination	Standard version
Regulator casing	Polypropylene
Bend relief	EPDM rubber

Denomination	Standard version
Cable sheath	PVC

The plastic components are welded and screwed together.

Lengths

Lengths		Part numbers
Meters	Feet	
13.2	42	594 79 43
20.2	65.6	594 79 44
30.7	100	594 79 46

For liquids with specific density between 0.95 and 1.10 g/cm^3, the following cables are available:

Lengths	
meters	feet
6	20
13	42
20	65
30	100
50	167

Diameter

The cable diameter for all product variants is 6.7 mm (0.26 in), +/- 0.2 mm (0.00787 in).

2.4 Electrical data

Country	Electrical data
Denmark	10 A, 250 V, AC
Switzerland	6 A, 250 V, AC
Sweden	10 A, 230 V, AC Resistive load 3 A, 250 V, AC Inductive load 5 A, 30 V, DC Resistive load

Micro switch

The level regulator contains a micro switch, max rated 250 VAC/10 A.

Low-voltage supply

In many cases, local codes require that the regulator is connected to a low-voltage supply, even though it is approved for a higher voltage.

It is recommended that the regulator is connected to a low-voltage supply, 48 V or 24 V, and a protective transformer.

2.5 Approvals and standards

Standard approvals

- LVD approval according to EN61058.
- CE

3 Mechanical Installation

3.1 Precautions

Before starting work, make sure that the safety instructions in the chapter *Introduction and Safety* on page 2 have been read and understood.

3.2 General

To conform to local regulations, the regulators are normally connected through a transformer to a low-tension control circuit.

Make sure that two regulators are used, one for starting and one for stopping.

If an alarm is required at a given level, then connect a third regulator.

Identical regulators can be used for all functions.

Make sure that the cables do not become tangled during the installation.

The regulator cables must hang freely from each other.

4 Electrical Installation

4.1 Precautions

Before starting work, make sure that the safety instructions in the chapter *Introduction and Safety* on page 2 have been read and understood.



DANGER: Electrical Hazard

Before starting work on the unit, make sure that the unit and the control panel are isolated from the power supply and cannot be energized. This applies to the control circuit as well.

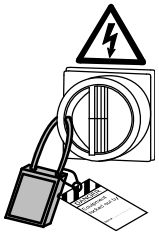



DANGER: Electrical Hazard

All electrical equipment must be grounded (earthed). Test the ground (earth) lead to verify that it is connected correctly and that the path to ground is continuous.



WARNING: Electrical Hazard

Risk of electrical shock or burn. A certified electrician must supervise all electrical work. Comply with all local codes and regulations.



WARNING: Electrical Hazard

There is a risk of electrical shock or explosion if the electrical connections are not correctly carried out, or if there is fault or damage on the product. Visually inspect equipment for damaged cables, cracked casings or other signs of damage. Make sure that electrical connections have been correctly made.



CAUTION: Electrical Hazard

Prevent cables from becoming sharply bent or damaged.

4.2 Wiring diagrams

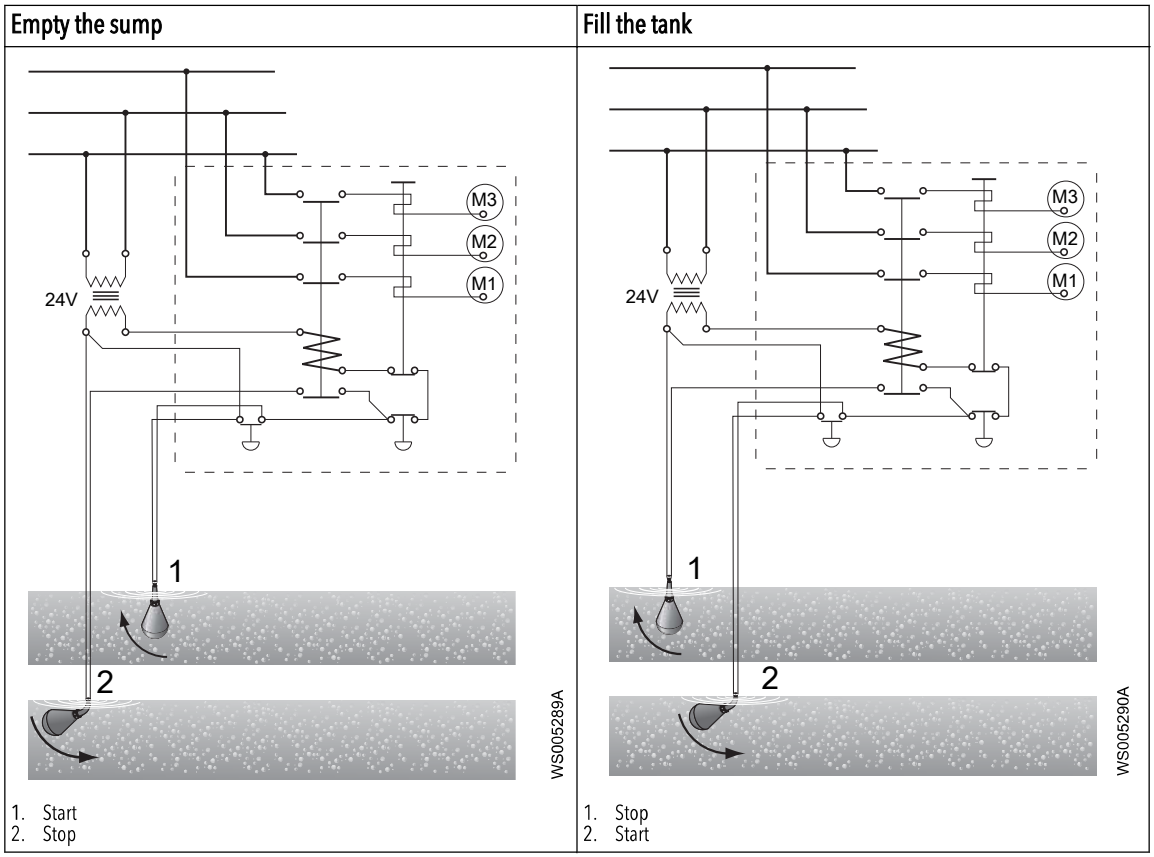

Connection table

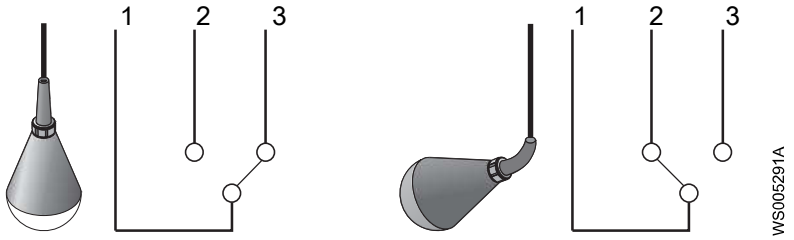

Cable	Connections to empty a sump	Connections to fill a tank
1	X	X
2	X	Insulate
3	Insulate	X

Color code

Cable	1	2	3
Color	Grey	Black	Brown

4.3 Connection for audible or visible alarm

Wiring diagrams

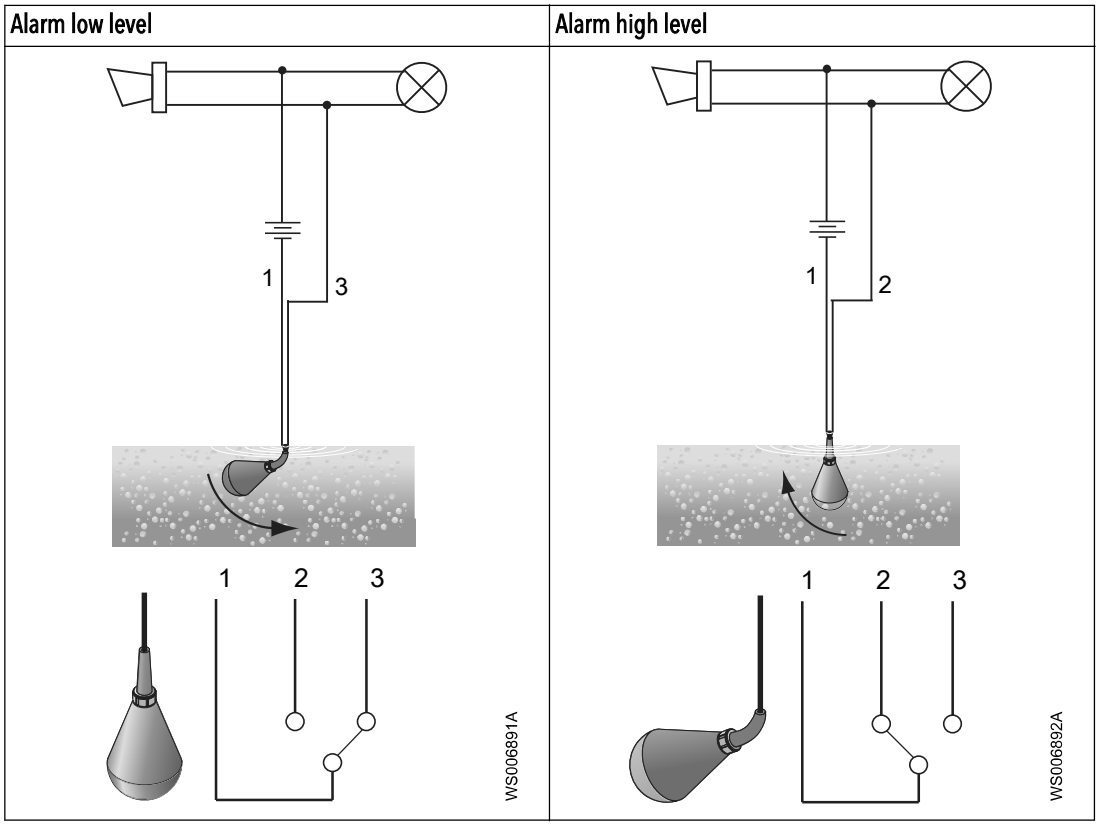

Description of position

Cable	1	2	3
Alarm high level	X	X	Insulate
Alarm low level	X	Insulate	X

Color code

Cable	1	2	3
Color	Grey	Black	Brown

5 Maintenance

5.1 General

To ensure its continual operation:

- Clean the product, especially when fat/grease covers the plastic surface
- Make an occular inspection of the regulator. Make sure neither cable, protective sleeve or plastic casing show any signs of damage.
- A damaged regulator cannot be repaired in any way, due to the hermetic encapsulation. If the product is found to be damaged, replace it with a new one.

Section 3.2.4

EQ Tank Feed Pumps

NETZSCH Canada, Inc. 500 Welham Rd., Barrie, On., L4N 8Z7
Ph: 705-797-8426 Fax: 705-797-8427 Toll Free: 1-866-683-7867

Offer: N210809ST-01
Date: August 9, 2021

Pump Quotation – Technical

NEMO® pump with Baseplate and drive: NM021BY01L06B

The physical characteristics of the pumped product, the application details, as well as the General Operating Conditions detailed in our offer have been taken from your inquiry or where not specified have been assumed by us. In the event of an order we would ask you to check any assumptions and all details as they will become contractually binding along with the selection of pump model, Drive, all specifications, and materials of construction, based on these details.

Product:			Screened Wastewater
Composition:			Flowable
Specific gravity	Assumed	kg/dm³	1
Particle size/Solids Size	Allowable	mm	3/12
pH value			NA
Solids content (w/w)		% TS	NA
Dynamic viscosity	Assumed	cPs	1-10
Vapour pressure	Assumed	Bar	NA

Application details:		***Content***	***normal***
Flow rate (Q)	approx.	M³/Hr.	0.8
Differential pressure	approx.	Bar	4
Suction pressure	assumed	Barg	flooded
Discharge pressure	Assumed	Barg	4
Pump operating speed	approx.	RPM	300
Frequency	approx.	Hz	60
Sliding velocity	approx.	m/s	0.49
Power required at drive shaft	approx.	kW	0.27
Running torque	approx.	NM	11
Starting torque	approx.	NM	10
Operating temperature	approx.	°C	10-25

Assembly specification

installation	horizontal

General operating conditions

Installation area	inside
ambient Temperature	approx. 25-45°C
humidity	up to 75%
application type	Continuous Operation
operating hours	16-24 hours/day
service voltage	3/60/575

Painting	coating system	NETZSCH Standard

Operating and Maintenance Instructions

Standard documentation in accordance with the 98/37/EG Machinery Directive.
Special documentation is available on request and would be charged for.

number	1
medium	Paper
language for O&M's and spare parts list	English
dispatch method	shipped with pump

NETZSCH Canada, Inc. 500 Welham Rd., Barrie, On., L4N 8Z7
Ph: 705-797-8426 Fax: 705-797-8427 Toll Free: 1-866-683-7867

Offer: N210809ST-01
Date: August 9, 2021

NEMO® NM021BY01L06B Pump



Characteristics and benefits of the NEMO_ BY pump:

- Reliable and sophisticated construction
- Modular construction system
- 4 different stator – rotor geometries available (for optimal meeting your request)
- Low investment and operating costs
- Low Maintenance expenses
- High Product life

General characteristics	
name plate on the pump	in English (Stainless steel)
direction of rotation	to the left, counter clockwise (as viewed from drive end)

Pump Pedastal	
material	Cast iron 0.6025 (not wetted component)

Pump housing / End connection	
housing material	316 stainless steel
flange position	vertical
function of housing connection	suction connection
flange design	N.A.
nom. dia. & pressure for pump housing	1.25"NPT
discharge flange design	N.A.
nom. dia. & pressure of discharge flange	1.25"NPT
Function of end connection	pressure connection
housing seals	FKM

Shaft seal	
type	Single mechanical Seal
shaft seal materials	Silicon Carbide Faces – Viton Elastomers
shaft seal type	Netzsch Single uNs100 – Q1Q1VGG

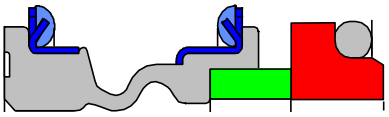

Rotating parts	
rotating parts materials	316 Stainless Steel

NETZSCH Canada, Inc. 500 Welham Rd., Barrie, On., L4N 8Z7
Ph: 705-797-8426 Fax: 705-797-8427 Toll Free: 1-866-683-7867

Offer: N210809ST-01
Date: August 9, 2021

Joints	
joint type	pin joint
sealing type	SM Pin joint
joint sealing material	Viton/316 Stainless Steel
joint lubrication	Mineral oil

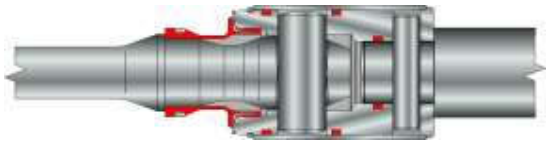

Rotor	
rotor material	316 Stainless Steel
temperature range for Stator expansion	UM20

Stator	
stator material	NEMOLAST® S61M- Buna Nitrile

Drive

Helical gear reducer	
manufacturer	Nord
type	SK172.1F-140TC
gear ratio	5.77
speed @ 60 Hz	303
Motor	
Manufacturer	TECO Westinghouse
motor HP	1
winding voltage	575
voltage range	+/-10%
frequency	60 Hz
number of poles	4
number of phases	3
Motor speed	1750 rpm
protection type	IP54-TEXP, Class 1, Div. 1
insulation class	F

Baseplate

assembly specification - material	Structural steel base plate

NETZSCH Canada, Inc. 500 Welham Rd., Barrie, On., L4N 8Z7
Ph: 705-797-8426 Fax: 705-797-8427 Toll Free: 1-866-683-7867

Offer: N210809ST-01
Date: August 9, 2021

Performance curve:

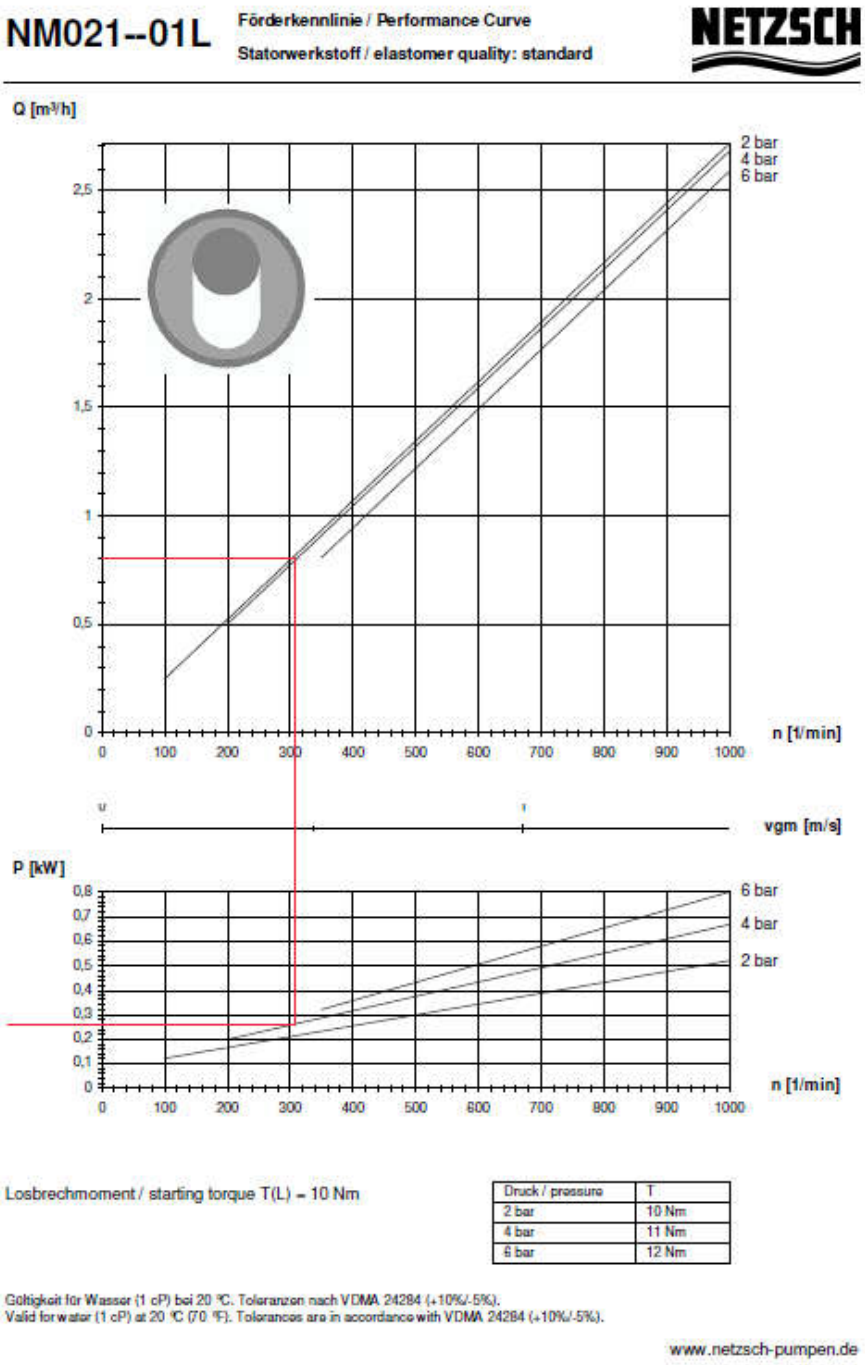

Losbrechmoment / starting torque T(L) = 10 Nm

Druck / pressure	T
2 bar	10 Nm
4 bar	11 Nm
6 bar	12 Nm

Gültigkeit für Wasser (1 cP) bei 20 °C. Toleranzen nach VDMA 24284 (+10%/-5%).
Valid for water (1 cP) at 20 °C (70 °F). Tolerances are in accordance with VDMA 24284 (+10%/-5%).

www.netzsch-pumpen.de

NETZSCH Canada, Inc. 500 Welham Rd., Barrie, On., L4N 8Z7
Ph: 705-797-8426 Fax: 705-797-8427 Toll Free: 1-866-683-7867

Offer: N210809ST-01
Date: August 9, 2021

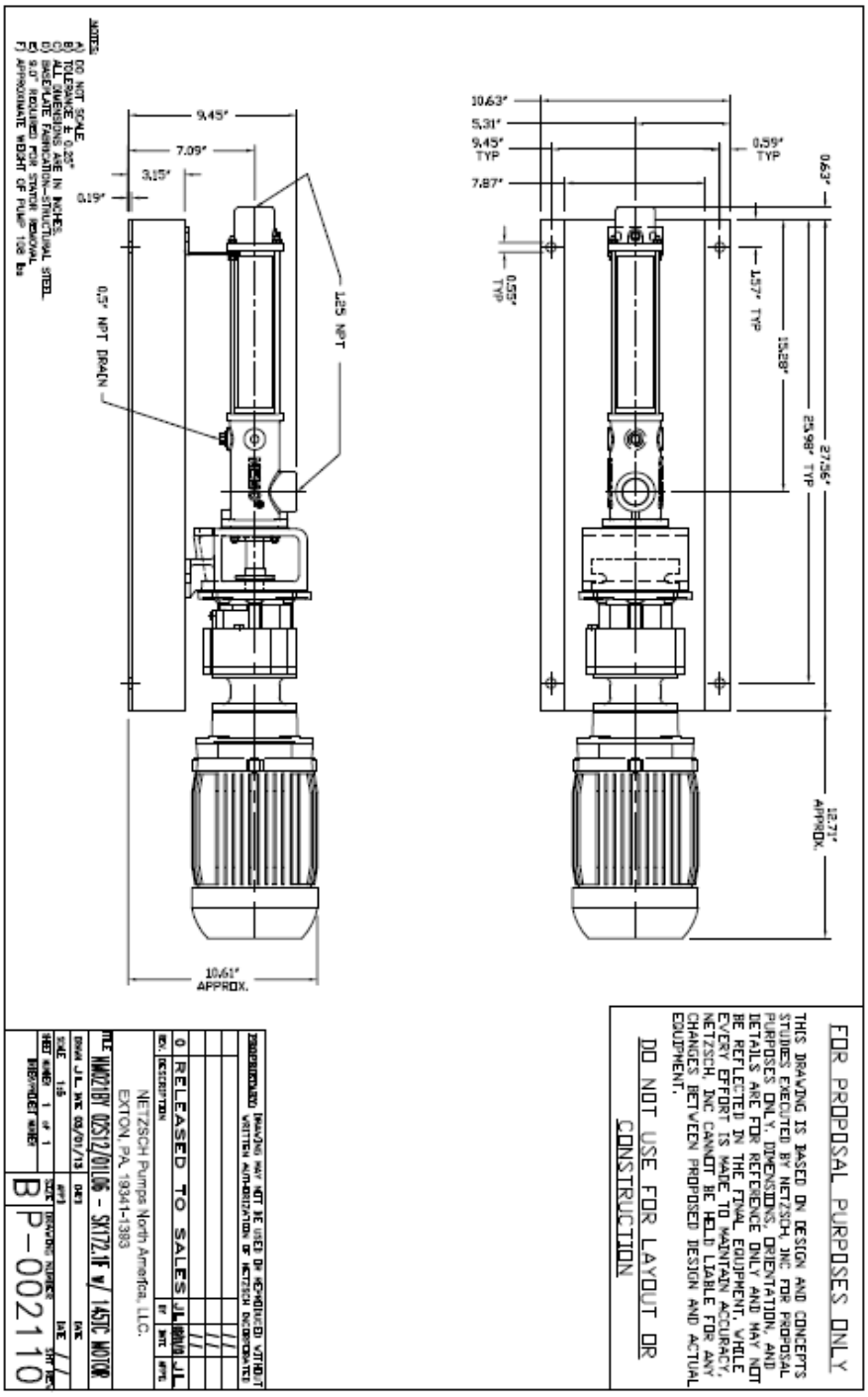

Pumps
Business Unit

Operating and Maintenance Instructions



NETZSCH Canada, Incorporated
500 Welham Road
Barrie, Ontario L4N 8Z7
Tel: (705) 797-8426
Fax: (705) 797-8427
Toll: 866 683-7867

www.pumps.netzsch.com

WARNING!!!!

When **Variable Frequency Drives (VFD's)**
are being used to vary the speed of the
NETZSCH Progressing Cavity Pumps, then they
MUST be CONSTANT TORQUE VFD's.

How the pump works

NETZSCH Progressing Cavity Pumps operate at a constant torque requirement for a specific operating pressure. The speed of the pump does NOT affect the torque requirement. **For example:** a pump running at 60psi output pressure at a speed of 200 revolutions per minute requires the same toque input as if it were running at 60psi output pressure at a speed of 600 revolutions per minute. The only exception to this rule is during pump startup; at the moment the pump starts the motor must provide more torque than the pump requires when it is running. This is due to the force of static friction that the motor must overcome in order to begin rotation. Although this is only a momentary force, enough torque has to be available to break the static load.

How the VFD works

Variable Frequency Drives work by taking the supplied power and modulating the supplied power frequency in linear proportion to the supplied voltage. This proportional modulation allows the motors speed to be altered without the motor drawing too many amps and burning out. A VFD can be built to perform this modulation in one of two ways. The VFD can be set to modulate the frequency above the normal supplied 60HZ frequency allowing the output to provide a constant amount of power but the torque will drop off as speed is increased **(THIS IS A CONSTANT HP VFD**) or it can modulate the frequency below the normal supplied 60HZ frequency allowing the output to provide constant Torque but the power will decrease as the speed is reduced **(THIS IS A CONSTANT TORQUE VFD).** This relationship is shown in the detail below. The manufacturers of VFD's typically offer two service factors. Normal Duty; which

has an overload capacity of the VFD's full load ampere rating times 110% - 120% for one minute and Heavy Duty; which has an overload capacity of the VFD's full load ampere rating times 150% for one minute. Typically, constant Hp VFD's are sold with a Normal duty rating since the applications don't call for high starting torque which causes amp draw to spike. Constant torque VFD's are usually sold with heavy duty ratings so that they can supply elevated startup amp draws for high starting torque applications.

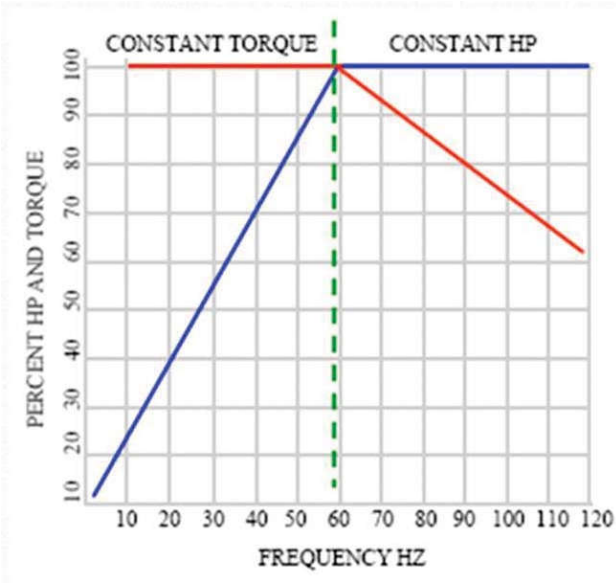

VFD Speed Torque Characteristics

Blue = Horsepower
Red = Torque
Green = Motor Nameplate Frequency (60 Hz)

In Constant Torque Area - VFD supplies rated motor nameplate voltage and motor develops full horsepower at 60 hertz base frequency.

In Constant Horsepower Area - VFD delivers motor nameplate rated voltage from 60 Hertz to 120 hertz (or drive maximum). Motor horse-power is constant in this range but motor torque is reduced as frequency increases.
Note: Motor HP = Torque x RPM

Application:

Because while running a progressing cavity pump the torque value required by the pump is fixed; any reduction in supplied torque as a result of operational speed could cause the pump to fail. Also, depending on the running speed required, a constant HP VFD may not be capable of supplying the torque needed for pump startup. This is the reason a **Constant Torque** VFD **MUST** be used to operate a progressing cavity pump.

	TABLE OF CONTENTS	PAGE 0.0

		Page
1	Safety Precautions	1.0
2	Description	2.0
3	Packing, Transportation, Storage	3.0
4	Installation Instructions	4.0
5	Start-up	5.0
6	Temporary Shutdown	6.0
7	Maintenance	7.0
8	Trouble-Shooting and Remedying	8.0
9	Dismantling and Assembly of the Pump Housing	9.0
10	Dismantling and Assembly of the Rotating Parts	10.0
11	Removal and Fitting of the Connecting Shaft	11.0
12	Dismantling and Assembly of the Shaft Sealing	12.0
13	Dismantling and Assembly of Special Units	13.0
14	Recommended Stock of Wear Parts	14.0
15	List of Spares and Sectional Drawing	15.0
16	List of After-Sales Service Centres	16.0

Remark: Because of data transfer the text sheet printouts of our operating instructions do not contain a personal signature.

1 Safety Instructions

This manual contains basic instructions which must be observed when installing, operating and servicing the machine / equipment. It is essential therefore for the user / installer or responsible technician to read the manual thoroughly prior to installation and operation.
A copy of the manual must always be at hand where the machine / equipment is being used. In addition to the general safety instructions listed in this main section on safety, it is necessary to observe the special safety rules included in other sections of the manual, eg. for private use.

1.1 Safety Signs

The signs below are printed in the manual as general hazard / danger symbols to mark those safety instructions whose non-observance can result in danger to personnel or to the machine / equipment. These signs are:



Hazard sign DIN 4844 - W9
Danger to general public

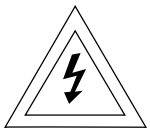

Hazard sign DIN 4844 - W8
Risk of electric shock

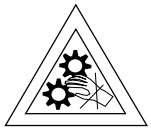

Risk of injury from machinery



Danger from suspended loads

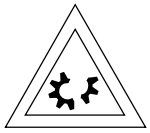

Damage to machinery



Risk of injury to your eyes: goggles required.

Continued Page 1.0R

Warning plates located directly on the pump/ equipment showing for example the correct direction of rotation or the fluid connections used must always be observed and kept completely legible.

1.2 Personnel Qualifications and Training

Operating, maintenance, inspection and installation staff must possess the correct qualifications for their work. Areas of responsibility, scope of authority and staff supervision must be exactly defined by the user. If personnel do not have the necessary knowledge they must receive due training and instruction. If necessary, the user of the machine / equipment can arrange for such training and instruction to be provided by the manufacturer / supplier. The user must also make sure that the content of the manual is fully understood by the staff concerned.

Responsibilites

All work on and operation of the pump/ equipment should be carried out by trained/ competent and qualified operators, tradesmen and / or engineers as appropriate.

Any person responsible for or in charge of

– **working with lifting gear** and ropes when moving a pump / equipment will have to be duly instructed prior to doing the transportation job;

– **mounting a drive** to a pump / equipment must be qualified / trained as an industrial mechanic / technician;

– **setting up installations into a plant** must be qualified / trained as an industrial mechanic/ technician and must be familiar with the design and functioning of the plant in which the pump / equipment is being installed;

– **doing work on starting up, operation and maintenance** must gain knowledge of the pump / equipment principle prior to performing such works and must study the safety instructions and the manual thoroughly;

– **doing repair works**, and prior to doing such works, must be trained and skilled in the job. He must have due knowledge of the pump/ equipments specific details set up in the repair instructions. Unskilled personnel must be trained and repair works checked.

1.3 Dangers arising from Non-Observance of the Safety Instructions

Non-observance of the safety instructions can result in danger to personnel as well as to the environment and the machine. Non-observance of the safety instructions can result in the loss of claims for compensation.

Non-observance of the safety instructions can have, for example, the following consequences:

▲ Failure of essential functions of the machine / equipment

▲ Failure of mandatory maintenance and servicing methods

Continued Page 1.1

- ▲ Danger to personnel from electricity, machinery and chemicals
- ▲ Danger to the environment from leakage of hazardous substances.

1.4 Safety Conscious Working

In addition to the safety instructions listed in the manual, it is essential to observe the national accident prevention directives currently in force and any of the users own internal regulations concerning work and safety.

1.5 Safety Instructions for the User / Operator

- ▲ If there is a risk of danger from any hot or cold machine component, the user must fit protective guards to prevent such components from being touched (according to Standard EN 563).
- ▲ Protective guards fitted to prevent contact with moving parts (eg. couplings) must be in position when the machine / equipment is in use.
- ▲ Leakages (eg. from a shaft seal) of hazardous materials (eg. explosive, toxic, hot material) must be discharged in such a way that neither personnel nor the environment are placed at risk. Legal directives must be observed.
- ▲ All possible danger from electricity must be eliminated (for details see eg. the regulations of your local power supply company).

1.6 Safety Instructions for Maintenance, Inspection and Installation

The user must ensure that all maintenance, inspection and installation work is carried out by authorized and qualified personnel who understand the operating instructions and are adequately trained.

Work on a pump / equipment must only be carried out with the machine stopped and electrical power supply turned off. The pump/ equipment must not be under any pressure and must have cooled off. All procedures detailed in these operating instructions on the stoppage of the machine must always be adhered to.

Pumps / equipment which convey harmful media must be decontaminated.

Immediately after the maintenance work is finished all safety devices and guards must be re-installed and the safety trips must be tested.

Before putting the machine back into operation the points detailed in section "Start-up" should be observed.

Continued Page 1.1R

1.7 Unauthorized Modifications and Manufacture of Spares

Modifications or changes to machines / equipment are only permissible with the manufacturer's agreement. Original spare parts and accessories authorized by the manufacturer ensure safety.
The use of other components revokes any liability for consequences which may result.

1.8 Improper Application

Delivered machinery / equipment is only guaranteed safe for the use specified.

This machine / equipment was designed in accordance with the prescribed conditions of use.
The limits of use are laid down in the conditions of use and should in no way be exceeded.

1.9 Specific Points for the Use of a NEMO® Pump

A NEMO® pump must be used for the **purpose only** for which it was sold.

If you change or wish to change the process medium, you must check with either the supplier or manufacturer that the pump is suitable for the new medium. This is especially important with aggressive, poisonous or otherwise hazardous substances.

Pump criteria include:

1. Compatibility with the medium
2. Suitability for seal design / material, especially the shaft seal
3. Resistance to pressure and temperature of the medium.

Please note that NEMO® pumps are progressing cavity pumps and as such can generate very high pressure.

A blockage or the chance closure of a valve in the discharge line can cause a pressure rise **manifold as high as can be tolerated by the installation**. This can result in the bursting of pipes, which must be avoided especially in the case of dangerous media.

Corresponding safety equipment must therefore be installed, for example an emergency stop button, a pressure relief valve with return pipe or a bursting disc.

During maintenance and repair work on the pump please note the following:

1. Ensure that the pump drive **can not** be turned on without authorization.
2. When opening the pump follow the instructions for handling the medium (eg. protective clothing, no smoking etc).
3. Before putting the pump back into operation ensure that all guards and other safety devices (eg. drive–belt protection, coupling protection) are properly re–installed.

Continued Page 1.2

1 SAFETY PRECAUTIONS

Always bear in mind your safety during operation, maintenance and installation of equipment. Please adhere to the EC-Directive for machinery including the national regulations and follow the US OSHA regulation #1910.219 & 1910.147 titled Mechanical Power transmission apparatus as well as the European Standard EN 292 with the accidents prevention rules laid down by the trade unions and other appropriate technical institutions.

Always bear in mind your safety during operation, maintenance and installation of equipment. Please adhere to the EC-Directive for Machinery including the national regulations and follow the European Standard EN 292 with the accident prevention rules laid down by the trade unions and other appropriate technical institutions.

Continued Page 1.2R

1.10 Notes on Inspection and Repair

The legal regulations for safety at work, such as regulations for the workplace, regulations governing dangerous materials, accident prevention, environmental protection eg. regulations on disposal and water balance obligate all commercial business to protect their employees and / or people and the environment from adverse effects caused by contact with dangerous materials.

Important:

Inspection / repair of machinery and its parts only takes place when a safety conformity certificate has been completed by an authorized and qualified specialist. Please use a copy and leave the original in the operation and maintenance manual.

Where special safety precautions are necessary in spite of careful emptying and cleaning of the machinery, the necessary information must be given.

Machinery operating with radio-active media will only be repaired or inspected by one of our specialist engineers under the safety of the owner.

The safety conformity certificate is part of the inspection / repair service. We reserve the right to refuse acceptance of this order / service for other reasons.

Continued Page 1.3

1.11 Instructions concerning explosion protection

The instructions below are to be considered and kept to when using pumps in potentially explosive areas in order to guarantee durable explosion protection of the pumps and avoid any danger of ignition.

In accordance with the regulations 94 / 9 / EC, the pumps are admitted for use in the area II 2G IIB T 4 or II 2G IIB T 3
(pls. see manufacturer's declaration or declaration of conformity).

It is to be taken into account that in case of aggregates the components (e.g. gears, couplings) mounted on the pumps must comply with the regulations 94 /9 / EC as well. The relevant documentation concerning these components is to be considered.
The application area of aggregates is determined by the application area of the mounted component with the lowest approval and thus may deviate from the allowed application area of the pump.

Temperature category	Max. temperature of the conveying product
T 4	100 °C
T 3	165 °C
T 2	265 °C
T 1	415 °C

The maximum conveying product temperatures apply when mechanical seals of Messrs. Burgmann with **carbide – carbide** and **carbide – carbon** as sliding material combinations are used.
In the case of other manufacturers or other sliding material combinations it is necessary to consult the manufacturer.

1. **Assembly and repair in potentially explosive areas**

   When performing assembly and repair work, it is to be seen to it that no dangers of ignition arise especially during heating up the pump parts. This means e.g. heating up by explosion-proof heating devices or exclusively in non-explosive areas. The temperature of the heated part and the ignition temperature of the materials by which the danger of explosion may be caused are to be considered.

2. **Dry-running protection**

   Under no circumstances is the pump to run dry.
   The pump is to be equipped with an appropriate dry-running protection device.

Continued Page 1.3R

The device for dry-running protection should be self-regulating.
This means that this device can give alarm signals and/or switch off the pump also in case of failures in its own control system.

Dry-running protection concerning stationary immersion pumps (with mounting plate)

Operation is only permitted with redundant or self-regulating automatic devices to guarantee dry-running protection as well as to control the pump capacity.

Dry-running protection concerning movable immersion pumps (drum pumps)

The filling with liquid during the operation is to be ensured by specific requirements of behavior:

- Drum pumps may only be introduced in and removed from the container in switched-off condition
- Drum pumps, after being introduced in the container to be discharged, may only be started after they have immerged in the fluid.
- Drum pumps are to be switched off before they run dry or are to be switched off at once when specific noises ("slurping" or speed rise) suggest that dry running may or will immediately occur.

3. **Overpressure protection**

   The pump must not be loaded over the maximum allowable pressure.
   The pump is to be equipped with an appropriate overpressure protection device. The pump must not convey against a closed slide valve.
   The overpressure protection device should be self-regulating.

4. **Drives**

   The drives must be adjusted to the performance of each pump.
   In the case of a blocking of the pump, the drives must be turned off automatically by means of a motor protection unit.

5. **Alignment of the drive (concerning the pump types SY / SH / SA / SO / SF / SP)**

   It is absolutely necessary that the drive be aligned within the maximum allowable tolerances. Incorrect alignment causes damage to the seals and the shaft bearings.

6. **Potential equalization concerning immersion pumps**

   The immersion pumps are to be integrated in the potential equalization of the installation. Hand-operated movable immersion pumps are to be grounded before being introduced in the container.

Continued Page 1.4

The connection to ground is to be maintained until the pump has been completely pulled out of the container.
There must not be any potential difference between the pump and a conductive container. This means that container and pump are to be connected at a common grounding point and thus be conductively connected with each other.
(see information brochure "Statische Elektrizität, Zündgefahren und Schutzmaßnahmen" (Static electricity, dangers of ignition and preventive measures); Publisher: "Internationale Sektion für die Verhütung von Arbeitsunfällen und Berufskrankheiten in der chemischen Industrie der IVSS" (International section for the prevention of employment accidents and occupational diseases in the chemical industry of the ISSA (International Social Security Association)) , Heidelberg 1995).
The hand-operated movable immersion pumps are to be provided with an indication referring to the grounding measure (pay attention to grounding).

7. **Potential equalization concerning all other pump types (no immersion pumps)**

   All conductive parts of the pump are to be integrated in the potential equalization of the pumping set unless the conductive connection to the ground potential is guaranteed by the drive or connecting shafts or otherwise.

8. **Stator**

   The stator is to be regularly checked for wear. When the allowable wear limit is reached, the stator is to be replaced. Before exchanging the conveying product, the pump operator has to consult the manufacturer concerning the durability of the stator unless the stator has already been confirmed for the intended application.

   Inspection and maintenance interval of the stator:
   - **in the case of an operating time of > 16 h/day, at least twice a year**
   - **in the case of an operating time of < 16 h/day, at least once a year.**

9. **Joints / joint lubrication**

   The sealing and the lubrication of the joints are to be regularly checked. If necessary, the seals and the lubricants are to be replaced.

   Inspection and maintenance interval of the joints:
   - **in the case of an operating time of > 16 h/day, at least twice a year**
   - **in the case of an operating time of < 16 h/day, at least once a year.**

10. **Inspection after initial startup**

    The aspects relevant for ensuring the explosion protection (such as lubrication and wear check) are to be checked six months after the initial startup of the pump at the latest.

Continued Page 1.4R

11. **Shaft bearings**
(concerning the pump types SY / SH / SA / SO / SF / SP)

Replacement of the bearings after 14,500 operating hours (according to prEN 13463-5: replacement after 90 % of the designated service life).

12. **Materials**

Although being allowed as material for the pumps, aluminum should be avoided in potentially explosive areas.
The pumps may only be used if, under the particular operating conditions, the materials are resistant to mechanical and/or chemical influences or corrosion such that the explosion protection will be maintained.

13. **Noise development**
(concerning the pump types SO / BO / SF / BF / SP / BP)

As soon as unusual noises (such as knocking or rubbing) are realized, the pump is to be switched off. The cause of the failure is to be eliminated before the pump is reoperated.
Regular check of the paddle equipment.

14. **Direction of flow of immersion pumps**

The direction of flow of immersion pumps always has to be from the end connection piece to the pressure nozzle at the top. The reverse direction of flow is not allowed.

15. **Mechanical seal of immersion pumps**

Before the initial startup and after a prolonged shutdown, the mechanical seal is to be lubricated from outside before the pump is started. In this connection, the compatibility of the lubricant with the sealing material is to be considered.

16. **Impurities in immersion pumps**

Especially in the case of hand-operated movable immersion pumps it is to be seen to it that no impurities can get into the pump. The pumps are to be deposited only on clean and solid ground or else to be suspended. In case of unusual noises or power losses, the immersion pumps are to be switched off immediately.

17. **Gland**

If a gland packing is applied it has to be observed that the permitted temperature corresponding to the temperature category is not exceeded. Recommendation: fasten the screws of the stuffing box gland only with low torque (approx. 5 Nm).

Continued Page 1.5

Safety Conformity Certificate

The machinery and its accessories together with this safety conformity certificate relating to repair / inspection services given to the undersigned by ourselves

Machine Type .....
Number .....
Delivery Date ..... Delivery Note No. .....

was carefully emptied and cleaned both inside and out in preparation for shipment
☐ yes
☐ no

Special safety precautions with regard to health or media endangered by water are to be implemented
☐ necessary
☐ unnecessary

The machinery is set up to transport materials dangerous to health or water and came in contact with media containing harmful substances
☐ yes
☐ no

The following safety precautions are necessary with regard to irrigation media, overflow liquid and waste management:

.....

.....

We confirm that the above mentioned details are correct and complete and that despatch will follow in accordance with the legal requirements:

Company ..... Telephone .....
..... Fax .....
..... Telex .....

Address

.....

.....

Name ..... Position .....

....
Date Company Stamp / Signature

2 Description

The NEMO® pump is a progressing cavity pump.
The main components which determine the system discovered by Professor René Moineau are a rotating part, called the rotor and a static part, called the stator.
The rotor is a helical screw with an extremely large pitch, large thread depth and small centre diameter with round cross-section for 1/2-geometry and elliptical cross-section for 2/3-geometry. The stator has a two start or resp. 3 start thread and is double or resp. 1.5 the pitch length of the rotor. This provides space for the medium between the rotor and stator. When the rotor turns round inside the stator the medium moves continuously from the inlet to the outlet.

The universal NEMO® pump system unifies many positive characteristics of other pump types:

- Like centrifugal pumps NEMO® pumps have no suction or pressure valves, but do have a stable flow rate in proportion to the number of revolutions.
- Like piston pumps NEMO® pumps have a suction capability of up to 8.5 m vacuum metric.
- Like membrane and peristaltic pumps the NEMO® pump can transport every type of inhomogenous, gaseous and abrasive media, as well as those that are not of a liquid consistency or contain solids and/or fibrous material.
- Like gear pumps and screw pumps the NEMO® pump is capable of coping with high medium viscosities.
- Like piston, membrane, gear or screw pumps the NEMO® pump can perform dosing operations.

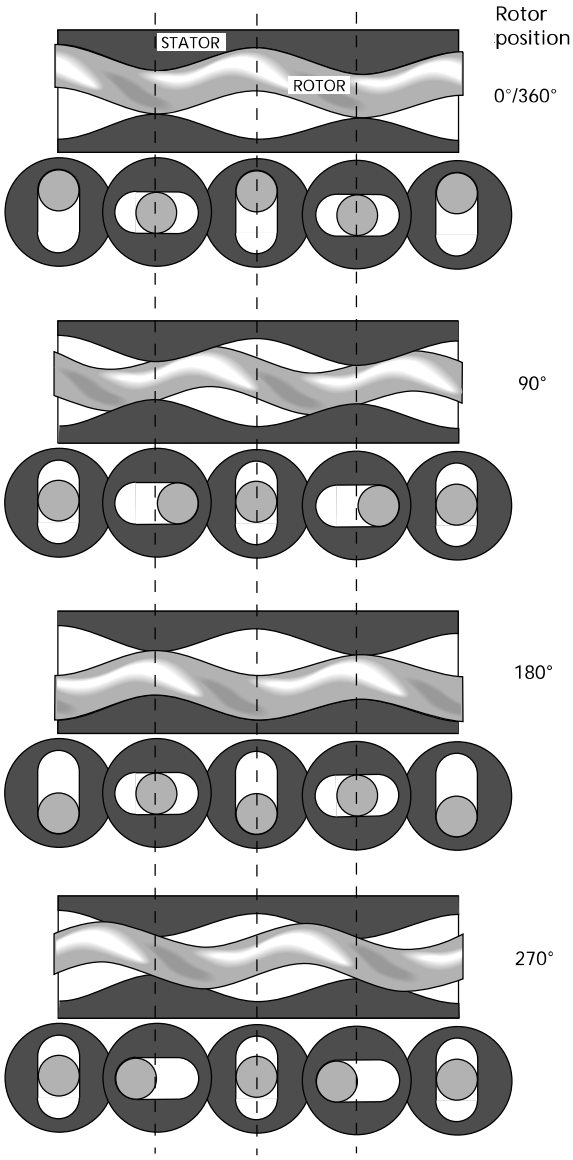

Length and cross-sections through the rotor and stator with 1/2-geometry during a rotation.

Continued Page 2.0R

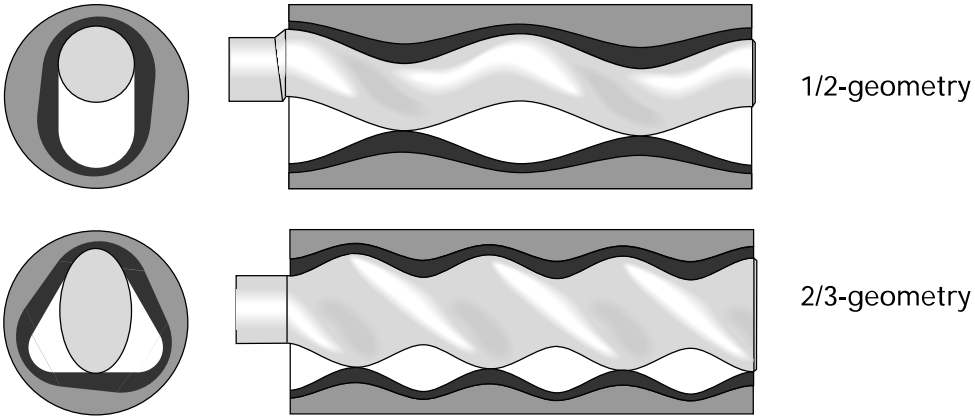

Length and cross-sections through the stator with rotor
with reduced stator wall thickness

2.2 General Data

Noise emissions:

The maximum permitted noise emission level at a work place is 70 dB (A).

The noise level was measured in accordance with DIN Standard 45635-24-01-KL2 to assure that the pump does not exceed 70 dB (A).

Noises generated by the drive and pipes are not included in the above emission value.

A prerequisite for the noise emission level of ≤ 70 dB (A) is that the pump is operated in a cavity free regime and is bolted to a concrete base.

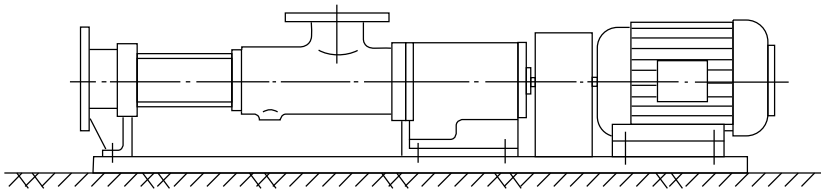

3 Packaging, Transportation, Storage

3.1 Packaging and Transportation

NEMO® pumps are shipped in railroad containers or crates unless the customer specifies otherwise.
The packings are labelled and symbols give the handling instructions in accordance with DIN 55402.
On receipt check for any transport damages.
Transport damages should be reported to the transporter immediately.
The pumps should be transported as closely as possible to the location of installation and only there should they be uncrated.

Uncrated horizontal pumps should be lifted by using a shackle which can be attached to the baseplate. The bolt holes of the frame or the lifting lugs attached to the baseplate could be used as shown on the installation drawing.

Vertical pumps should be lifted by using the bolt down holes, lifting lugs or shackles attached to the baseplate. This is shown on the installation drawing. For most applications, the drive is mounted on top of the pump.



Be careful when lifting top heavy pumps. The centre of gravity may be above the points where the lifting gear is attached to. If the case, secure additionally against tipping over!

Vertical pumps should not be deposited unless they are secured vertically. **Hazards of tipping!** Deposit only in horizontal position!



It is essential to avoid that the total pump unit be suspended with eye bolts of the motor or gear box. These eye bolts should be used for lifting the motor and/or the gear box **only.**

The Accident Prevention Rules, Section 18.4 relating to lifting accessories for the lifting of loads (VBG 9a) must be strictly adhered to.

Because of the variety of possible pump designs and applications, only general instructions can be given here. These should be good enough for experienced assemblymen or transportation experts.
When in doubt, please ask for detailed information on the pump unit concerned.

Continued Page 3.0R

When moving the pump or unit on **wheels** strictly attend to the following:

- Pad lock the motor drive and secure against unintended starting up.
- Move the pump unit carefully and slowly, especially where the ground is uneven. **Hazards of tipping!**
- Ensure a stable position of the pump or unit at the operating/storage place and secure it by actuating **all** clamping devices on **all** the wheels or rollers against voluntary moving away.
- Where fitted loosely, carefully watch the pipe bends when pumping. **Power of repulsion!**
- Where necessary, secure the pump unit additionally with support blocks.

3.2 Storage

The pumps are preserved for transport unless specified otherwise.
In cases of longer storage the pumps should be handled as follows until installation:

- **Stator:**

If the pump is not to be used immediately, then the elastomer along the contact line between rotor and stator may become permanently distorted (compression-set). This will increase the break away torque. Therefore, the stator should be removed and kept separately in a clean, cool and dry environment.
Standard DIN 7716 summarizes detailed information on the storage of rubber products, some of which is gathered here, and the following notice applies to a storage for a period of up to six months.

General

Most of the rubber products may change their physical properties under unfavourable conditions or if treated improperly, which will result in a shorter lifetime.
Or they may become useless through excessive hardening, aging, regenerating or permanent deformation, also because of blistering, cracking or other damages appearing on the surfaces.
The changes may occur under the influence of oxygen, ozone, heat, light, humidity, solvents or because of storing the products under tension.
If stored and treated properly, the rubber products will keep their properties, even over a long period of time (some years), almost unchanged.
This does, however, not apply to uncured rubber compounds.

Continued Page 3.1

Store room

The environment in which rubber products are being kept must be cool, dry, free of dust and rather airy, and they must not be stored in the open, not even in a weather sheltered space.
Rubber products should be kept in surroundings not having less than minus 10 °C and not more than plus 15 °C.
Store rooms should not be damp, and it must be ensured that there will be no condensation.
Most favourable is an environment offering a relative humidity under 65 %.
Rubber products must be protected against light, particularly direct sunlight or artificial light when having a high UV portion.
They should furthermore be kept away from ventilation, especially draught, by wrapping them up.
As ozone is very aggressive and harmful there should be no store room used which houses equipment likely to produce ozone, e.g. electric motors or other equipment which might bring about sparks or other electrical discharges.
There must be no solvents, oil, grease, lubricants or any chemicals kept in a store room.

- **Rotor**

  Please support with wooden blocks and cover up against harm from mechanical impact.
  For rotors of RCC (material number 1.2436):
  coat the surfaces with protective grease to avoid rusting.

- **Shaft Sealing by packing gland**

  Remove the gland and coat the exposed shaft surface with grease.

- **Pump parts in stainless steel**

  No grease coating necessary.

- **Other, non-coated pump parts**

  Protect with grease.

- **Drives**

  Please observe the drive supplier's instructions.

4 Mounting and Installation

If the NEMO® pump was stored and the rotor grease protected: Remove the grease before installing the stator. Clean the rotor thoroughly in order to avoid unsuitability of the grease with the stator material and the pumping medium.

Screw the pump at all fixing points (bearing housing / drive stool, end stud, support feet) using all fixing bores securely down to the sub-structure (ground plate, machine frame, foundation etc.).

4.1 Direction of Rotation

The direction of rotation of the pump is given on the model plate and in the order confirmation. The direction of delivery of the NEMO® pump is a function of the direction of rotation.

Changes must be agreed upon and confirmed by the supplier.

4.2 Pressure

If not explicitly confirmed otherwise in the order confirmation, the **maximum permissible pressure (e.g. when turning clockwise) inside the pump housing (A)**

– for models with pump housing of cast iron 6 bar

– for models with welded pump housing 10 bar.

The maximum permissible pressures inside the end flange (B) is a function of the design applied for connections

- with flange: maximum nominal pressure (e.g. PN 16)
- with threaded internal socket: maximum 25 bar
- with DIN 11851 "dairy" thread up to DN 100 for one or two stage pumps: max. 12 bar, for multi stage pumps: max. 25 bar
- for other versions: maximum permissible pressure of the socket connection, but not more than 6 bar per pump stage, depending on the stator installed.

4.3 Piping System

- Arrange suction and pressure pipes so that when the pump is not running, the medium is still present before and after the pump. Sufficient media should remain inside in order to lubricate the pump during restart.

Continued Page 4.0R

4 INSTALLATION INSTRUCTIONS

■ The installation of a removable distance piece between the end flange (B) and the pipe work is recommended in order to make the dismantling of the stator easy. The distance piece (see sketch) needs to have a minimum "ABL" disassembly length the values of which are shown in the table below, depending on the pump size and the number of stages.

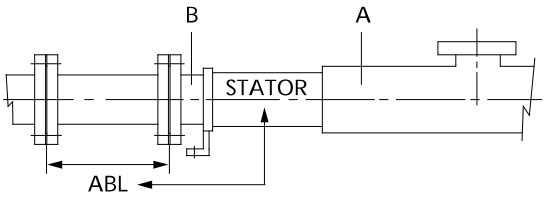

Disassembly length ABL in mm:

Pump size	Number of stages			
	1 *)	2	3	4
0 1 5	90	160	230	310
0 2 1	130	230	340	450
0 3 1	170	310	450	590
0 3 8	230	430	630	830
0 4 5	270	500	730	960
0 5 3	320	600	880	1170
0 6 3	370	690	1010	1330
0 7 6	420	800	1170	1540
0 9 0	500	950	1390	1840
1 0 5	630	1180	1740	-
1 2 5	740	1400	-	-

*) for one stage pumps with L or P geometry the ABL values of 2 stage pumps are valid

Continued Page 4.1

Type key

Example: NM 090 BY 02 S 12 B

- Internal
- **Pump size**
- Type
- Model
- **Number of stages**
- Geometry
- max. permissible pressure difference
- anti–clockwise
- Joint

The disassembly length "ABL" is also shown in the arrangement drawings in accordance with our Standard QSH V - TB 01 - 002.

- Clean the pipe work and rinse thoroughly before installing the pump.
- Connect the pipe work ensuring that no external stress attacks the pump body. The installation of compensators between the pump and the pipework is recommended:
  - No risk of damage to the pump housing from pipelines "resting" on the pump.
  - No risk of damage to the pump housing through vibrating pipelines.
- The twisting loads (F_x, F_y, F_z) and bending loads (M_x, M_y, M_z) permitted to be put on the suction/discharge flange comply with the requirements of API 676 and exceed the requirements of EN ISO 14847. They are shown in the table below.

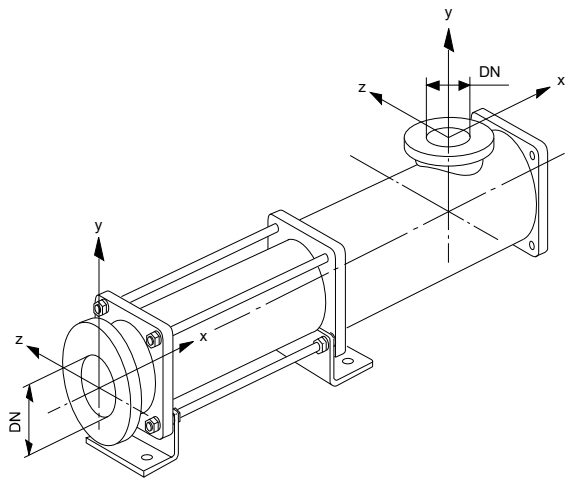

Continued Page 4.1R

Pump type NM	Standard nominal diameter DN	F_x, F_y, F_z N	M_x, M_y, M_z Nm	
015 021	(32) G 1¼"	550	(300)	Screwed joints must not be charged with loads which may result in tightening or loosening these joints
31	50	780	420	
38	65	990	530	
45 53	80	1160	620	
63	100	1490	800	
76	125	1820	980	
90 105	150	2190	1180	
125	200	2850	1530	

4.4 Shaft Sealing

- Where applicable, ensure that adequate supply lines for the buffer, flushing or quenching fluid for the shaft seals are connected **before** the pump is put into **operation**.
  For more details see Section 7.4!

4.5 Electrical Connection



All work relating to electricity shall only be made by **authorized and qualified personnel** and it should be in compliance with the requirements of the relevant national regulations!

In particular for control systems should the latest version of the **EC-Directive for Machinery 98/37/EEC, Annex I, Section 1.2 Controls** be carefully observed!

Note for frequency converter operation:
It is absolutely necessary to connect the PTC-resistors of the drive in case of frequency converter operation to protect the drive against overheating.

5 Start-up

The NEMO® pump design requires strict attention to the following:



Never run the NEMO® pump dry!
A few rotations in dry condition
will damage the stator!

- Before starting up for the first time, fill the pump with medium.
  In the case of high viscosity media fill with a liquid.
  Pump priming is vital to ensure lubrication of the rubber stator.
  Fill the piping on the pump suction side.
  In anti–clockwise rotation only: Fill the pump housing.

The NEMO® pump is a progressing cavity pump which can produce pressures that may cause the bursting of vessels or pipes.



The power transmission train (shaft, coupling rod, joints, rotor) of the pump may be overloaded thus resulting in damage or breakage.

Also the pump housing parts with their connections may be overloaded and break. There is a table in Section 4 of these Maintenance and Operating Instructions showing the pressure resistance of the pump housing parts.



Never run the pump against a closed inlet or outlet valve!

- **Open valves and vents before starting the pump!**
- **Check the direction of rotation by briefly switching on the pump motor.**

DETERMINING WHEN TO LOCKOUT

Having performed a hazard analysis on your company's equipment, you can now determine when machines must be locked out – i.e., when employees are exposed to injury from each (or any) of a machine's hazardous energy sources during servicing or maintenance activities. To do this, use your Hazard Analysis Checklist and the "Four Key Questions for Lockout Implementation."

OSHA Requirements

OSHA rules state that equipment must be locked out during equipment servicing and maintenance whenever employees are exposed to injury from unintentional machine movement or startup. According to OSHA's regulations, servicing or maintenance procedures that require lockout include:

"Workplace activities such as construction, installing, setting up, inspecting, modifying, and maintaining and/or servicing machines or equipment. These activities include lubrication, cleaning, or un-jamming of machines or equipment and making adjustments or tool changes, where the employee may be exposed to the unexpected energization or startup of the equipment or release of hazardous energy."

In addition, lockout is required during any machine service or maintenance that requires an employee to:

- Remove or bypass a safety device; or
- Place any part of his or her body into a point of operation or similar danger zone during a machine's operating cycle.

Routine, Repetitive Activities

Routing and repetitive servicing procedures that take place during normal production operations, such as minor tool changes and adjustments, do not require lockout tagout, as long as the work is performed using "alternative measures which provide effective protection." These "alternative measures" include safeguarding methods approved by OSHA and ANSI (American Standards Institute) to protect operators, such as:

- Presence sensing devices
- Interlocking barrier guards

Remember, the factor that determines whether these or any other safeguarding methods eliminate the need for lockout tagout during routine, repetitive activities is whether the employee is protected from injury.

If lockout is not required, you MUST have clearly written procedure that describe the alternative safeguarding measures used and the tasks that may be performed. Refer to OSHA and ANSI standards for approved safeguarding methods.

6 Temporary Shutdown

- After stopping the pump empty and if necessary rinse it if



  - the medium might freeze due to the temperature surrounding the pump. Especially where there is a danger of frost if the pump is installed outside a building
  - the medium tends to solidify or harden
  - the medium tends to glue up the shaft seal.

- Stator:

  When stored for a long period, the elastomer along the contact line between the rotor and stator may become permanently distorted (compression-set).
  This will increase the break away torque. For this reason, the stator should be removed (please observe Section 9!), and stored in a cool, dry place in air tight package to give protection against light and air.

- Rotor:

  Remove **ceramic rotors** (please observe Section 10!) and store away, safe in the original packing.

  Support **other rotors** on wooden blocks and cover to protect them from mechanical damage, after the stator has been removed.

  Rotors made of RCC (material number 1.2436):
  Protect the rotor surfaces against corrosion with protective grease.



  Remove the grease before re–installing the stator and clean the rotor thoroughly in order to avoid unsuitability of the grease with the pumping medium or the stator material.

- Stand-by pump:

  A stand-by pump is sometimes used as a back-up for the main pump and, when standing idle for longer periods, should be operated from time to time. The pump may otherwise become seized when being started up. This is due to compression set i.e. distortion of the stator against the surface of the rotor.

7 Maintenance

7.1 Pumps in General

- The pumps should be regularly rinsed or cleaned if deposits of medium are likely to build up (sedimentation).





If the pump needs to be opened to do this, ensure that the pump and motor are switched off and cannot be turned on accidently (eg. by removing the fuse).

Periodical standstill to allow for cleaning during operation depends on the medium and type of operation.

- The pump can be cleaned:

  - through the cleaning ports provided in the pump housing
  - manually by dismantling the pump
  - automatically (CIP cleaning) for special housings with a flushing section (important instructions for CIP procedures are given in Section 5 (START UP).

7.2 Lubrication

The NEMO® pump does not require frequent lubrication.

- Maintenance of the drive should be carried out according to the drive manufacturers instructions.

- Maintenance
  - where no manufacturers instructions are available and
  - when normal conditions of use exist:

  - Strip down the drive unit
  - Remove the bearings
  - Clean all parts
  - Renew the lubricant

  every 5000 operating hours or at least every two years.



Special lubricants are often specified for mechanically controlled variable speed drives.
It is therefore important to follow the drive manufacturers maintenance instructions.

7.3 Lubricating the Pin Joints with SM-Pin Joint Seals

- It is advisable to change the oil and check the seals of the pin joints:
  - when renewing worn joint parts
  - when opening the pump for any reason.

  The quantity of oil added per pin joint is a function of the joint external diameter D:

Joint external diameter D in mm (see sketch)	Basic joint size	Quantity of oil per joint in cm^3
28	NM 015	1,5
30	NM 021	2
40	NM 031	5
54	NM 038	15
65	NM 045	22
76	NM 053	36
83	NM 063	78
102	NM 076	165
125	NM 090	205
148	NM 105	450
162	NM 125	470
Journal cross joint 175	NM125	1650

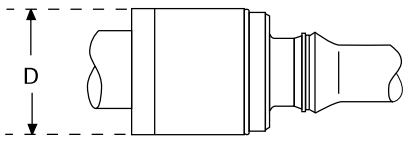

Pin joint

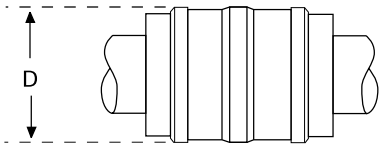

Journal cross joint

Continued Page 7.2R

Lubricating Oil:

Industrial application	Designation DIN 51502	Permitted Product
Food and Beverage Industry only	Authorized for use in foodstuffs — CLP HC 460	"KLÜBER" KLÜBEROIL 4 UH 1 - 460 authorized under USDA H1



This synthetic oil meets both the German "Arzneimittelbuch" requirements and the still stricter US American FDA regulations.
Nevertheless, it is not quite harmless if swallowed in more than minor quantities!

At a sudden break in a joint up to 450 ml of lubricating oil together with metal rubbings may enter the pumping medium. It is therefore of essential importance to regularly check the state of the joint seals and renew in time, if necessary.

If the pin joints operate without lubricating oil or seals, there will be no risk of contaminating the medium with oil. This operation, however, results in a higher amount of rubbed off metal parts through wear on the joints. These metal rubbings will inevitably and continuously come into contact with the pumping medium.

General Industry	CLP 460	"SHELL" Omala 460
	with SM-pin joint seal (8235) of EPDM CLP PG 320	prescribed: KLÜBERSYNTH GH 6-320

7.5 Shaft Sealing through Single Mechanical Seal

There are various constructions of mechanical seals. Especially advantageous is the use of standard mechanical seals according to DIN 24960. These seals have regardless of their brand the same fitting dimensions which makes them interchangeable. Mechanical seals with a coil spring can only be used for pumps which are run in one direction of rotation.

- The seal specification of a NEMO® pump is recorded on the order confirmation sheet.
- Pumps fitted with direction dependent seals should **never** be run in the opposite direction of the rotation arrow.
- If excessive leakages occur the spring tension and the seal surfaces should be checked, and the seal be replaced, if necessary.

Single mechanical seals usually work without any additional equipment. Their application range can be increased by operating them with a rinsing or cooling system.

a) **Quench**, in accordance with ISO 5199, Appendix E, Plan Nos. 08, 09, 10 or 13 or API 610, Appendix D, Plan No. 62.

Quench is the designation commonly used in sealing engineering for an arrangement that applies a non pressurized external fluid to the atmospheric side of a mechanical seal. The quench is used when

- a single mechanical seal will not work or only to a limited extent without auxiliary measures or
- a double mechanical seal with pressurized buffer fluid is not necessary.

Recommended for the following applications:

- Low temperature (danger of freezing)
- Operation in a vacuum (dry running)
- Media which must be isolated from the atmosphere (eg. due to build up of solid deposits or because of less severe damage to the environment, like smell).

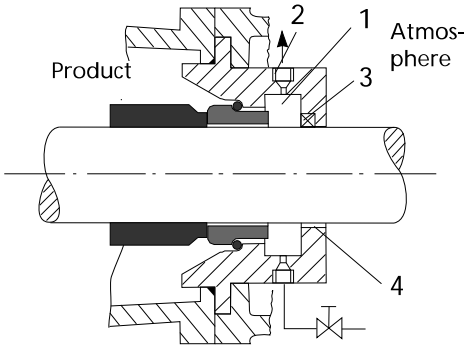

Continued Page 7.5R

Leakages will be transportet away by the quenching liquid.
In vacuum operation dry running of the seals is avoided.



No pressure higher than that of the pumped medium **in front** of the mechanical seal is allowed to build up in the quenching area (1) **behind** the mechanical seal. Otherwise the counter ring will be pushed out of the housing. **Free discharge** from (2) is necessary!

Closing off the quenching area from the atmosphere can be done in three ways:

1. In the case that high emission levels can be tolerated:
   Through a throttle bush (4). Cooling liquid not permanently used, only released from time to time.
2. In the case that medium emission levels can be tolerated:
   By a radial shaft seal ring (3). Permanent radial shaft seal lubrication through quenching liquid is necessary.

b) **Top lubrication**

Attention: For vertically installed pumps with overhead drive as type NT:

On initial start-up the mechanical seal has not come in contact with the medium. It runs therefore dry for a short period of time until the air is displaced from the pump housing.

- On first start–up and if stood idle for longer periods lubricate the mechanical seal before switching on the pump.
- Apply water, glycerine or oil depending on their compatibility with the pumping medium and the elastomer of the mechanical seal.
- Fill the quench cup of the mechanical seal housing.

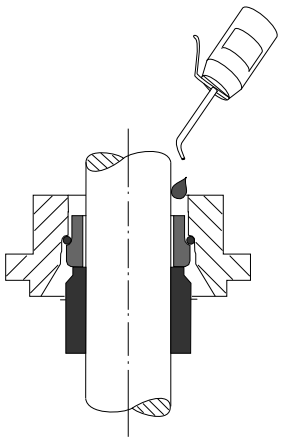

8 Trouble-Shooting and Remedying

8.1 Trouble Chart

The chart overleaf lists possible problems

- the type
- the likely reason / cause
- the remedy.

- A problem may have various causes: Several boxes in the vertical column are marked with a cross.
- A reason/cause may result in various problems:
  Several boxes in the horizontal column are marked with a cross.

8.2 How do you trace the kind of problem to find the possible cause ?

- The column describing a possible problem shows one or several boxes marked with a cross.
- On the corresponding lines you will find the possible reasons/cause and some hints how to handle the problem .
  Thus the actual cause of the problem can be narrowed down and eventually detected.
- If you find further cross-marked boxes on one of the lines and should there appear corresponding problems as well, then the likely cause of the problem has been detected.

- The table helps in finding the root of the problem and will give you the remedy if it is straight forward. For more complicated problems the manufacturer has to be consulted.

Continued Page 8.0R

The NEMO®-pump is a well established product which was thoroughly tested before leaving the factory. If you use the pump in keeping with your Order Specification and treat it in accordance with our Operating and Maintenance Instructions, it will run satisfactorily for a long period of time.

Possible Problems											
The pump is no longer starting	The pump is no longer sucking	The pumped medium is too little	The pressure is too low	The pumped medium is unstable	The pump is running loudly	The pump is stuck	The drive is overloaded	The stator life time is too short	The rotor life time is too short	The shaft seal is leaking	**Possible Causes** (Remedy overleaf)
X							X				In new pumps or stators : the static friction is too great.
X		X	X				X				The pump electrical equipment is not compatible with the electrical supply.
		X					X	X	X		The pressure is too high.
X						X	X				There are foreign bodies in the pump.
X						X	X	X	X		The temperature of the liquid medium is too high, the stator is too ductile.
X						X	X	X			The stator has swollen, the elastomer is not compatible with the medium.
X						X	X	X			The solids content of the medium is too high and leads to blockages.
X						X	X	X	X	X	The liquid medium sediments or hardens when left to stand.
		X	X	X							There is air in the suction pipe.
	X	X	X	X							The suction pipe is leaking.
	X	X	X	X							The shaft seal is leaking.
		X	X								The rpm is too low.
	X	X	X								With reduced diameter rotors : operating temperature has not been reached.
		X	X	X	X			X	X		The suction is too great or pressure too low (cavitation).
		X	X		X	X	X	X			The pump is running dry.
	X	X	X		X						The stator is worn out, or temperature of liquid is too low.
	X	X	X		X			X	X		The stator material is brittle.
	X	X	X		X			X			The rotor is worn out.
					X						The joints are worn out.
					X						The pump and drive are not axially aligned.
					X						The elastic element of the coupling is worn out.
					X					X	The roller bearings are destroyed.
							X				The rpm is too high.
							X				The viscosity is too high.
							X				The specific weight of the medium is too high.
							X			X	The stuffing box is incorrectly tightened.
										X	The packing is not suited to the liquid medium.
	X									X	Mechanical seal : rotation is incorrect.
										X	Mechanical seal : mechanical seal and mating ring have failed.
										X	Mechanical seal : elastomers damaged, swollen or brittle.

Remedy
Fill the pump up, then pump through manually using a suitable appliance; if necessary use glycerine as lubricant in the stator.
Check order information. Examine electrical installation (possibly 2 phase operation).
Measure the pressure with a manometer and check against order details. Reduce the pressure or change the drive.
Remove foreign bodies and eliminate possible damage.
If the liquid medium temperature cannot be lowered, use a reduced diameter rotor.
Check whether the liquid medium agrees with the order requirements. Possibly change stator material..
Increase the liquid part of the medium.
Clean the pump and rinse through after each run.
Increase the suction liquid level, prevent turbulance and air bubbles at the inlet.
Check seals and tighten pipe connections.
Stuffing box : tighten or renew. Mechanical seal : renew seals, eliminate solid deposits.
In the case of adjustable drives : increase the rpm. If necessary change the drive.
Warm up the pump (stator) to operating temperature first of all.
Decrease suction resistance, lower the temperature of the liquid medium, install the pump at a lower location.
Fill up the pump, provide for dry running protection, move the pipes.
Replace with a new stator or ensure correct liquid temperature.
Fit a new stator. Check the liquid medium agrees with order details; if necessary change the stator material.
Change rotor, establish the cause. Wear and tear, corrosion, cavitation; if necessary change to a different material or coating.
Replace relevant parts, carefully reseal and lubricate.
Re-align the unit.
Use a new connection and re-align the pump.
Replace roller bearings, lubricate, reseal. At higher temperatures observe the lubricant and the bearings.
In the case of adjustable drives : lower the rpm.
Measure the viscosity and compare with order details. If necessary adjust viscosity or change the drive.
Measure specific weight and compare with order details. If necessary adjust specific weight or change the drive.
Service stuffing box according to page 7.4, if necessary renew worn shaft.
Replace fitted packing with another packing type.
Change electrical connection.
Replace relevant rings with new ones.
Replace elastomers. Check whether the liquid medium agrees with order details, if necessary change material.

9 Removal and Fitting of End Stud, Stator and Pump Housing



The pump with attached pipework should be empty and must have cooled off!
Disconnect the pipework on the suction side and pressure side of the pump.

Caution for pumps with ceramic rotors!



Where a pump is fitted with a **ceramic** rotor (1999) the following operations should be carried out **with great care.**
Do not use any force or sharp tools! Special care must be taken to prevent heavy strokes, vibrations or impact by a hammer.

Dismantling

- Remove the securing screws (S) from support feet (2035) to baseplate (G).

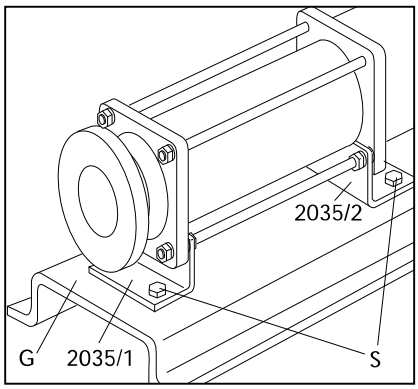

- Unscrew the hex nuts A (3020) and remove with spring washers (3015), then withdraw the end stud (2005) and first support foot (2035/1) with washers (3070).

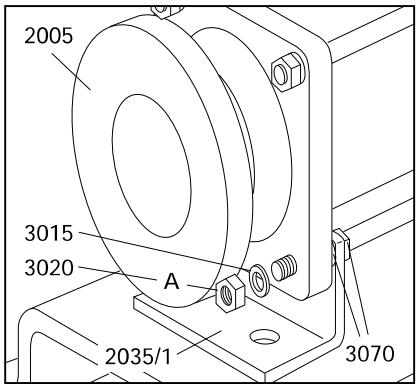

Continued Page 9.0R

9 DISMANTLING AND ASSEMBLY OF THE PUMP HOUSING

- Support pump housing (2010) and stator (3005) with wooden blocks.
- Loosen the hex nuts B (3020), where fitted, and remove the thru bolts (3010).

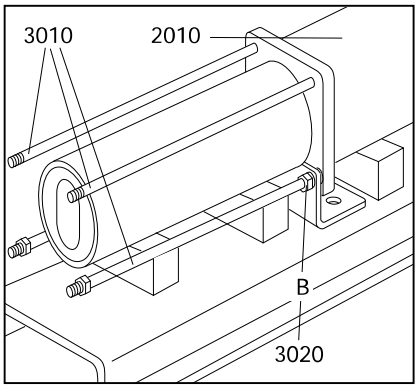

- Where fitted, remove the second support foot (2035/2) and the washers (3070).

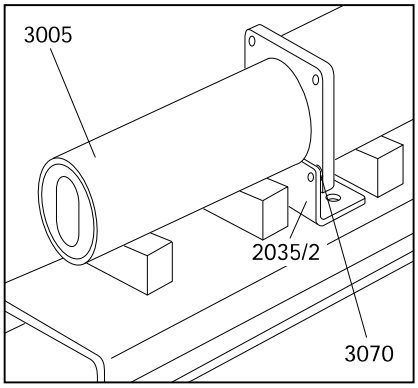

Caution for pumps with ceramic rotors!

When the stator (3005) is removed from the **ceramic** rotor (1999), the stator must be supported to prevent it from suddenly tilting away downwards. The same applies to the rotor (1999) as soon as it is disengaged from the stator (3005). Removing the stator (3005) from the **ceramic** rotor (1999) is easier by using an extractor. This should be done slowly and with care in a rotating movement. When sliding pump housing (2010) over **ceramic** rotor (1999), both coupling rod (1998) and rotor (1999) should be lifted as the **ceramic** rotor (1999) must not knock onto the pump housing (2010).

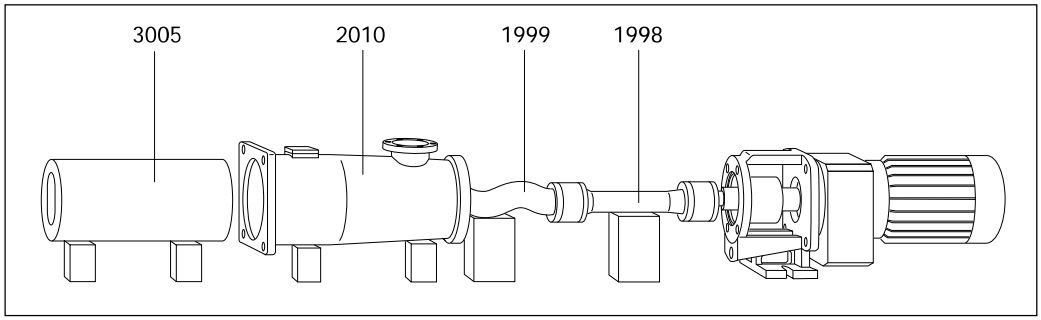

Continued Page 9.1

Caution for pumps with tubular rotors:

Where the walls of tubular rotors are worn in the wear zones, pumping medium may occur inside the rotor and may come out when pulling off the stator.
Ensure that protective measures have been taken when pumping dangerous media!

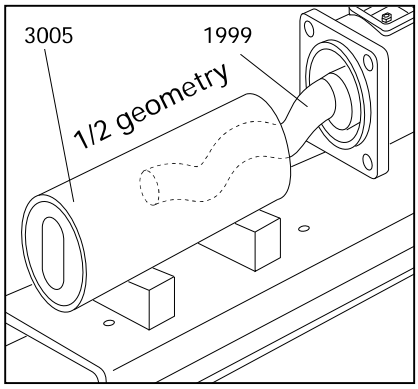

- Pull the stator (3005) out forward.
  A stator extractor can be supplied as special accessory.

- Remove the hex nuts (2030) with spring washers (2025).
- Pull the pump housing (2010) off forward.

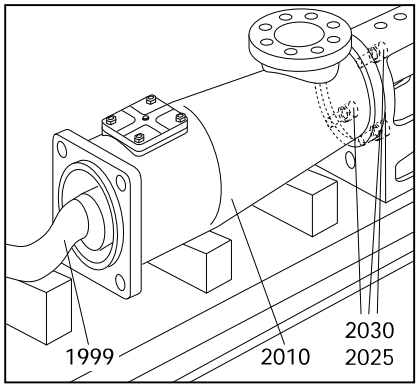

Assembly

- Refitting is a simple reversal of this procedure.

  When refitting the stator (3005) check direction of stator (3005) is correct! The funnel-shaped inflow side (E) of the stator (3005) must show to
  - the pump housing (2010) when rotation is **anti-clockwise**
  - the end stud (2005) when rotation is **clockwise**

  when viewed on pump shaft end.

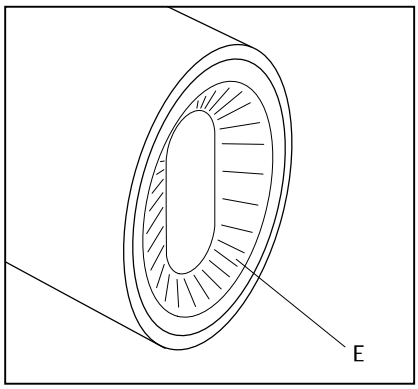

- **Elastomer stators (A)** have integrated front side sealing profiles (D). They don't need additional gaskets for sealing off the end stud (2005) and the pump housing (2010).

- **Solid stators (B)** have **no** integrated front side sealing profiles. Therefore additional gaskets (8005) should be installed to seal off the end stud (2005) as well as the pump housing (2010).

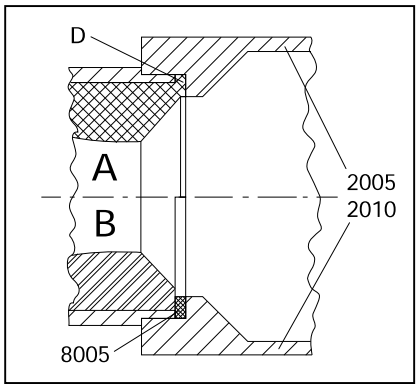

Continued Page 9.1R

9 DISMANTLING AND ASSEMBLY OF THE PUMP HOUSING



Be careful when engaging the stator (3005) and rotor (1999). Do not trap your fingers!
Do not reach inside the stator!

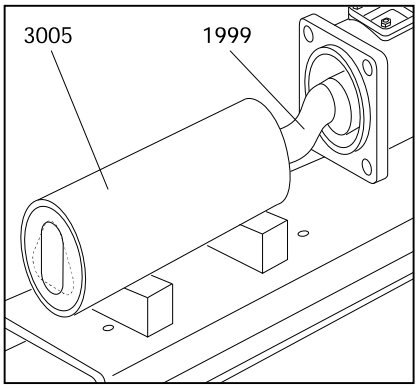

- Push the stator (3005) with a rotating movement on to rotor (1999).
  Apply an assembly device and some glycerine to ease engaging the stator (3005) and rotor (1999).

- When tightening hex nuts (2030) a gap will remain between drive stool (0085) and pump housing (2010).



Please do not try to close this gap by overtightening the nuts!
Drive stool (0085) may break!

Torque values for hex nuts (2030):

Size	M6	M8	M10	M12	M16	M20	M24	M30
Required torque Nm	8	15	30	45	75	80	100	120

- Fastening the end stud (2005):

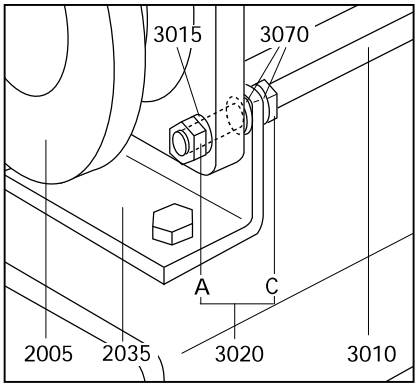

Screw the hex nuts C (3020) down into the thru bolts (3010) as far as possible.
Slip on the first washers (3070), the support foot (2035), the second washers (3070), the end stud (2005) and tighten with spring washers (3015) and hex nuts A (3020).
Finally, fasten the support foot (2035) from behind with the two hex nuts C (3020).

Ensure during refitting that the O-ring (8015) or, where a heating jacket (3025) is installed, the O-rings (8030) are in perfect condition and will sit correctly.



Ensure that the drain plug (2015) is not screwed too tightly into the pump housing (2010), since otherwise its conical thread may break the pump housing (2010).
The torque should be about 40 - 50 Nm.

10 Dismantling and Assembly of the Rotating Parts with Pin Joints with SM-Pin Joint Seal (basic joint size NM015 - NM125)

10.1 Removal of Rotor and Coupling Rod

Where a pump is fitted with a **ceramic** rotor (1999) the following operations should be carried out **with great care.** Do not use any force or sharp tools! Special care must be taken to prevent heavy strokes, vibrations or impact by a hammer.
For removal of the rotor (1999) and coupling rod (1998) the pin joints should be dismantled as follows:

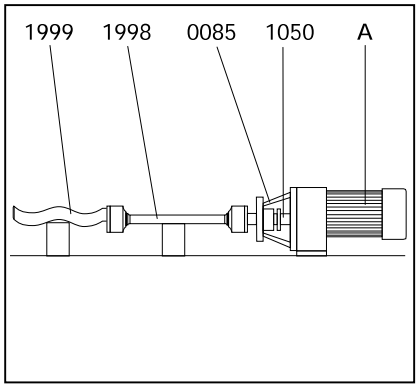

- Place the dismantled unit – consisting of drive stool (0085) with drive (A) and connecting shaft (1050), coupling rod (1998) and rotor (1999) – on the work-bench with a wooden block supporting the rotor (1999).

Basic joint size NM125:

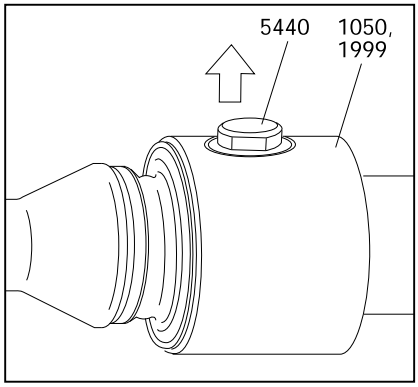

- Unscrew the wear sleeves (5440) from the head of rotor (1999) or connecting shaft (1050)

Basic joint size NM021 - NM105:

- Push circlip (5065) out of its groove and slip off over the head of rotor (1999 or connecting shaft (1050).

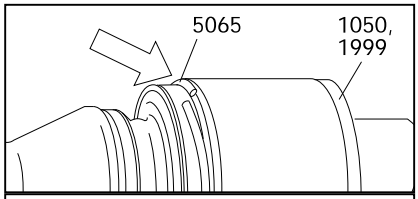

Pumps fitted with a ceramic rotor (1999):

- **Carefully** turn safety sleeve (5115) with a squeeze belt wrench, and remove.

The following method should **not** be employed for pumps fitted with a **ceramic** rotor.

Pumps fitted with a metallic rotor (1999):

- If necessary hit the edge of sleeve (5115) at an angle with the help of a wooden block and a plastic hammer. Taking care not to damage the O-rings (8060)!

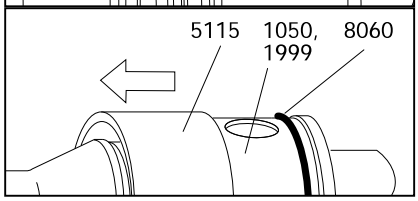

Continued Page 10.0R

10 DISMANTLING AND ASSEMBLY OF THE ROTATING PARTS

Basic joint size NM021 - NM125:

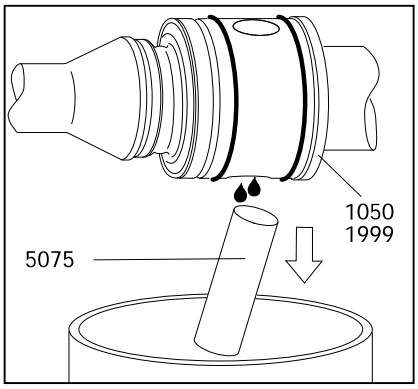

- Press the pin (5075) out of the head of rotor (1999) or connecting shaft (1050). If necessary use a hammer and a thin cylindrical pin (DIN 6450 C).
  Drain the oil into a receptacle.

  Caution for pumps with ceramic rotors!

  Where a pin (5075) may not come out easily, the metallic head of rotor (1999) should be supported on wooden blocks. Then the pin (5075) can be driven out with the help of a pin punch (DIN 6450 C). This should be done **with care**, holding the **ceramic** rotor with your hands.
  Please dispose of this oil in the proper manner.

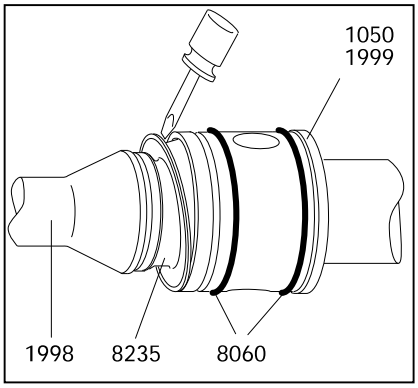

- Using a screwdriver, carefully lever the SM-pin joint seal (8235) out of the head of rotor (1999) or connecting shaft (1050).



Taking care not to damage the SM-pin joint seal (8235)!

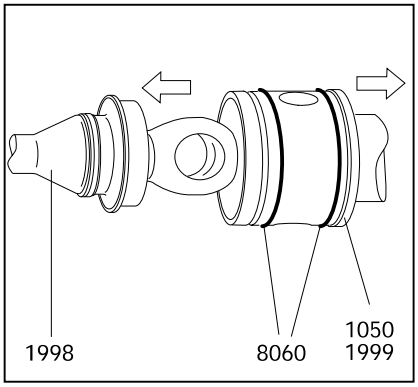

- Pull apart the rotor (1999)/ coupling rod (1998) / connecting shaft (1050) assembly. Remove the O-rings (8060).

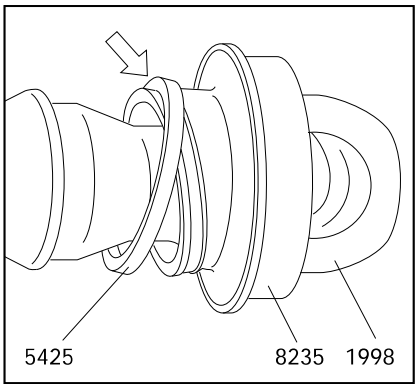

- Push the SM-pin joint seal (8235) towards the head of coupling rod (1998). In the narrow coupling rod section press the clamp ring (5425) out of the groove of the seal. Then slip the SM-pin joint seal (8235) and clamp ring (5425) off over the head of the coupling rod (1998).

Continued Page 10.1

10.2 Fitting the Rotor and Coupling Rod

For fitting the rotor (1999) with coupling rod (1998), the two pin joints should be assembled as follows:

- Slip the clamp ring (5425) over the head of coupling rod (1998).

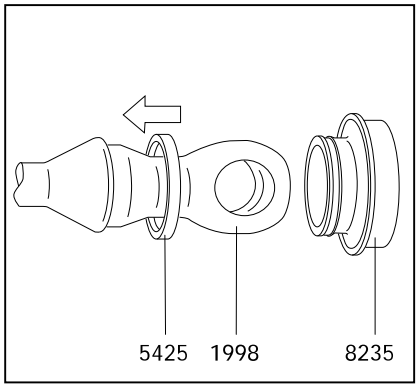

- Push the SM-pin joint seal (8235) over the head of coupling rod (1998) towards its narrow section, there sqeezing the clamp ring (5425) into the groove of the SM-pin joint seal (8235).

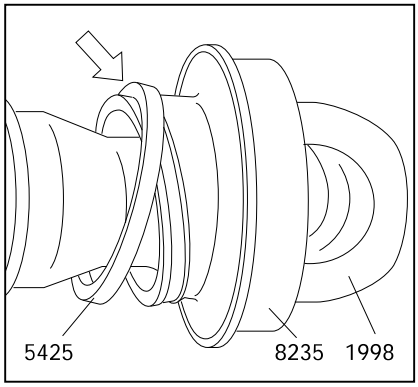

- Push the SM-pin joint seal (8235) with the correctly placed clamp ring (5425) up to the shoulder of coupling rod (1998).

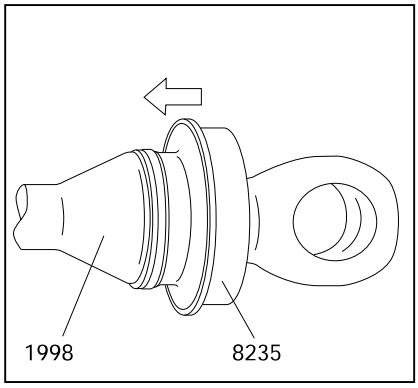

Continued Page 10.1R

10 DISMANTLING AND ASSEMBLY OF THE ROTATING PARTS

Basic joint size NM021 - NM105:

- Slip the circlip (5065) on to the coupling rod (1998). Slide the sleeve (5115) on to coupling rod (1998) so the inside diameter of chamfering (A) is being placed towards the coupling rod (1998) extension. Chamfering (A) will later on ease the installation over the O-rings (8060).
  Orient the head of coupling rod (1998) until it is in vertical position for the bore (B) for the pin (5075).

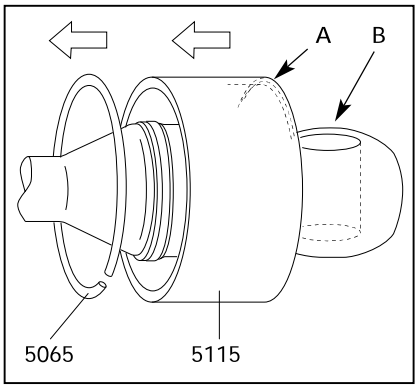

- Slide the coupling rod (1998) with SM-pin joint seal (8235) into the bore of rotor (1999) or connecting shaft (1050) and insert the pin (5075) from below and push up to the upper edge of coupling rod (1998).
  Support the pin (5075) against dropping out.
  Slide the SM-pin joint seal (8235) into the rotor (1999) or connecting shaft (1050) only from below, and in a slightly slanted position.

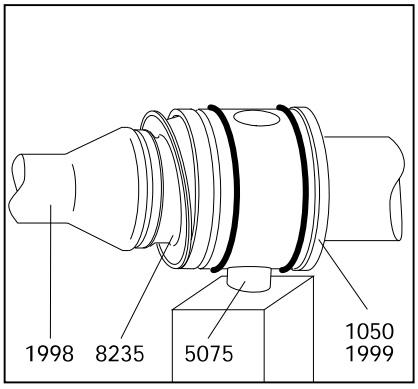

- For lubrication, use an oil can which should be fitted with a thin plastic hose having an outside diameter of not more than 4 mm.
  Insert this hose into the upper oil port opening in the rotor (1999) or connecting shaft (1050). Then slide the hose end past the coupling rod (1998) all the way down to the bottom section of the rotor head (1999) or connecting shaft (1050).
  Slowly fill with lubricating oil up to the filling port.

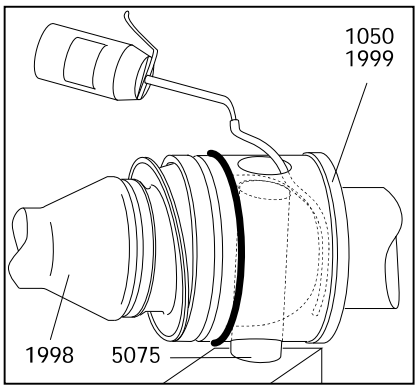

- Pull the hose out.
  Then insert the hose end through the small gap on the topside of SM-pin joint seal (8235) and guide it down to the bottom of the hollow space between coupling rod (1998) and SM-pin joint seal (8235).
  Slowly fill with lubricating oil up to the gap.

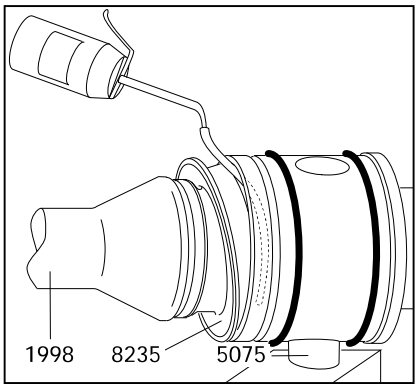

Continued Page 10.2

- Pull the hose out.
  Push the pin (5075) entirely into the bore of head of rotor (1999) or connecting shaft (1050) and retain in place.
  Only now, press the SM-pin joint seal (8235) into the bore of head of rotor (1999) or connecting shaft (1050) and push up to the shoulder. In doing so the SM-pin joint seal (8235) should be slightly bulbous around the outer surface. Wipe off overflow oil. Use this oil for lubricating the O-rings (8060).

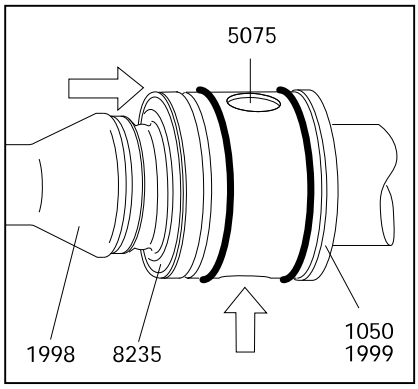

- Slip the sleeve (5110) or (5115), with its chamfering (A) forward, on to the head of rotor (1999) or connecting shaft (1050) and push up to the shoulder.

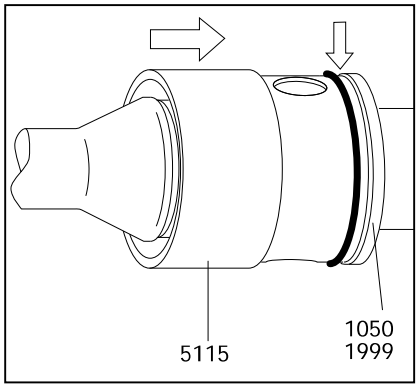

- Place the circlip (5065) into its groove on the rotor head (1999) or connecting shaft (1050) and carefully snap in place all around.

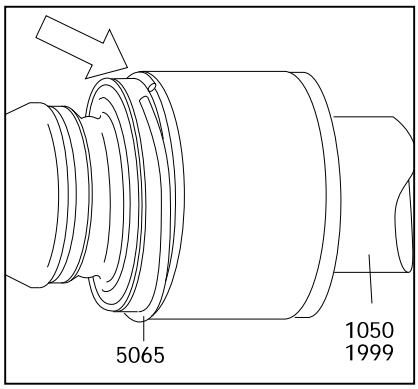

- **Basic joint size NM125:**

  Slide the coupling rod (1998) into the bore of the head of rotor (1999) and connecting shaft (1050) and insert the pins (5075).
  Insert the SM-pin joint seal (8235) (8235) into the head of rotor (1999) and connecting shaft (1050).
  Only then screw in one wear sleeve (5440) with O-ring (8060) into the head of rotor (1999) and connecting shaft (1050) and turn upside down.

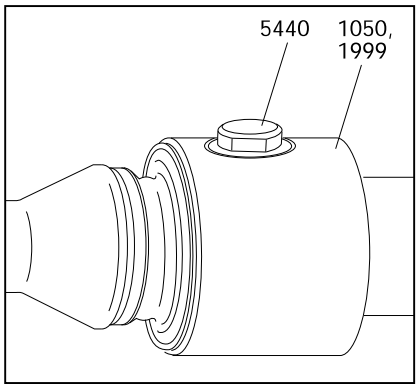

10 DISMANTLING AND ASSEMBLY OF THE ROTATING PARTS

- For lubrication, use an oil can which should be fitted with a thin plastic hose having an outside diameter of not more than 4 mm.
  Insert this hose into the upper oil port opening in the rotor (1999) or connecting shaft (1050). Then slide the hose end past the coupling rod (1998) all the way down to the bottom section of the rotor head (1999) or connecting shaft (1050).
  Slowly fill with lubricating oil up to the filling port.

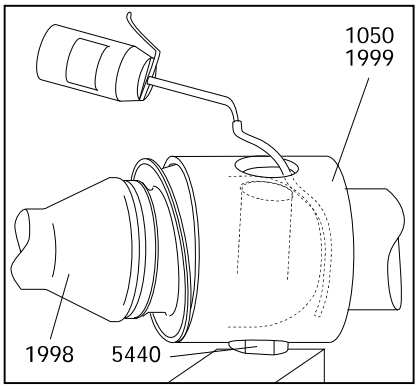

- Pull the hose out.
  Then insert the hose end through the small gap on the topside of SM-pin joint seal (8235) and guide it down to the bottom of the hollow space between coupling rod (1998) and SM-pin joint seal (8235).
  Slowly fill with lubricating oil up to the gap.
- Screw in the second wear sleeve (5440) with O-ring (8060) into the head of rotor (1999) and connecting shaft (1050).

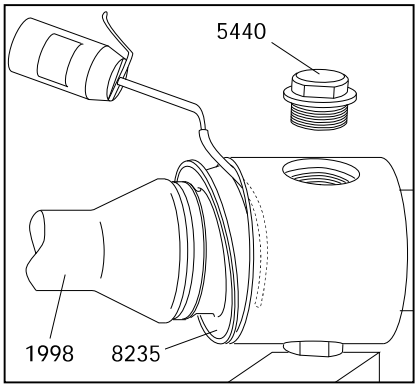

- **Basic joint size NM021 - NM125:**

  Drive connecting shaft (1050), coupling rod (1998) and rotor (1999) are now joined by means of the two pin joints.
  Pump housing (2010), stator (3005) and end stud (2005) may now be fitted.

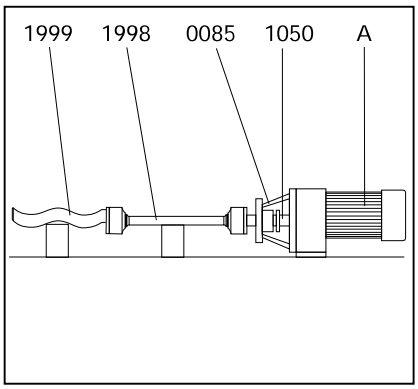

Continued Page 10.3

10.3 Dismantling and Assembly of the Rotating Parts with Pin Joints with SM-Pin Joint Seal (joint basic size NM015)

For removal and refitting of the rotor (1999) and coupling rod (1998) the pin joints should be dismantled and re-assembled as follows:

Dismantling:

- Push the SM-pin joint seal (8235) away from the rotor (1999), drive shaft (1005) or connecting shaft (1050) so the bore for the pin (5075) comes free.

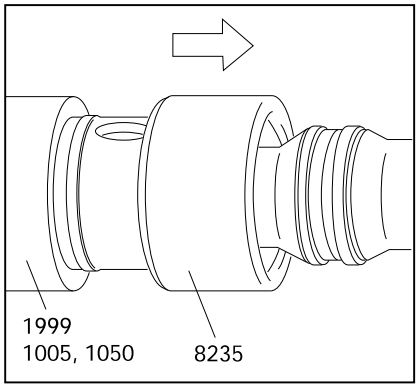

- Press the pin (5075) out of the rotor (1999), connecting shaft (1050) or drive shaft (1005). Then withdraw the coupling rod (1998) from the bore of rotor (1999), connecting shaft (1050) or drive shaft (1005).

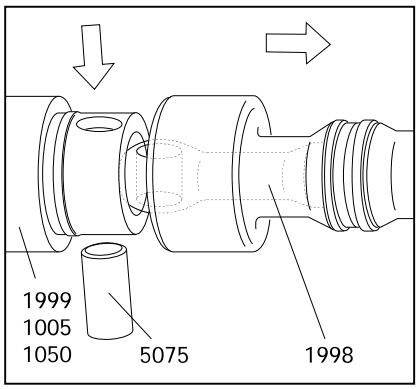

- Push the SM-pin joint seal (8235) towards the head of coupling rod (1998). In the narrow coupling rod section press the clamp ring (5425) out of the groove of the seal. Then slip the SM-pin joint seal (8235) and clamp ring (5425) off over the head of the coupling rod (1998).

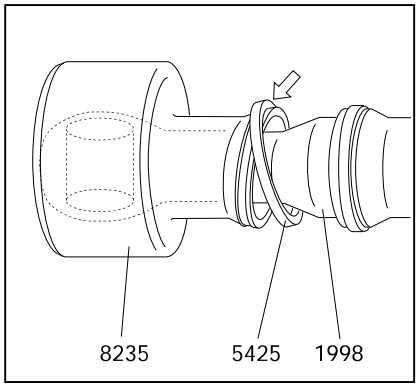

Continued Page 10.0R

10 DISMANTLING AND ASSEMBLY OF THE ROTATING PARTS

Re-Assembly:

- Slip the clamp ring (5425) and the SM-pin joint seal (8235) on over the head of the coupling rod (1998).

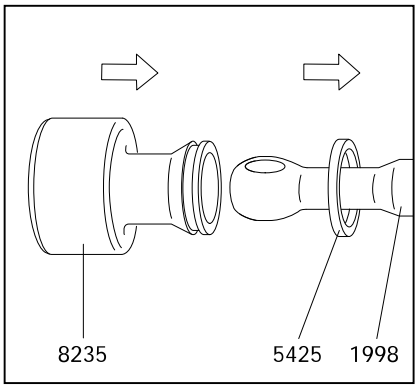

- Push the SM-pin joint seal (8235) towards the narrow section on the head of coupling rod (1998) and place the clamp ring (5425) back into the groove of the SM-pin joint seal (8235).
  Then move the SM-pin joint seal (8235) up to the coupling rod (1998) shoulder.

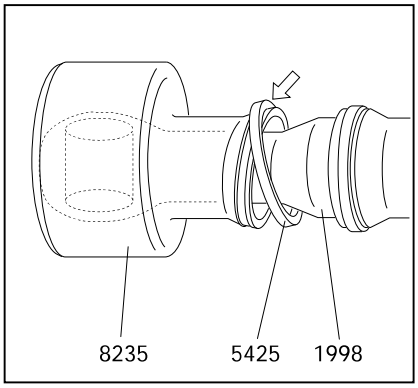

- Place the head of coupling rod (1998) into the bore of the rotor (1999), drive shaft (1005) or connecting shaft (1050).

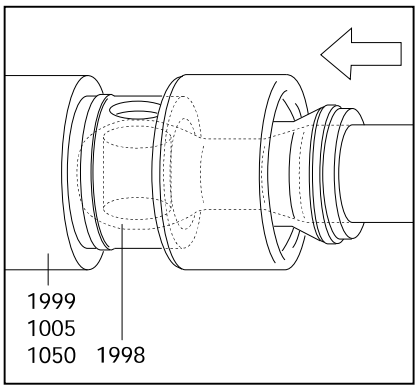

- Join the rotor (1999), drive shaft (1005) or connecting shaft (1050) and coupling rod (1998) by the pin (5075).
  Then push the SM-pin joint seal (8235) up to the shoulder of the rotor (1999), drive shaft (1005) or connecting shaft (1050).

  Re-assemble the second pin joint in the same manner.

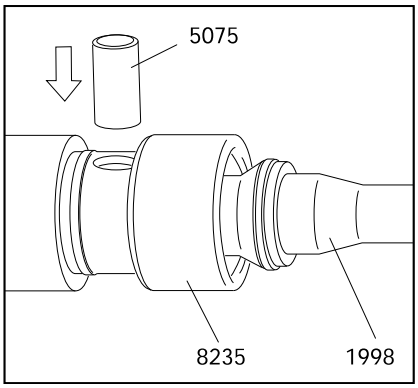

11 Removal and Fitting of the Connecting Shaft with Shaft Seal

Removal:

- Push the circlip (1035) in the direction to the mechanical seal.
- Remove pin (1030).
- Remove the shaft seal housing (7005) and mechanical seal (7010) together with connecting shaft (1050) and set ring (1035) from drive stool (0085) and the drive shaft.
  The thread of cylindrical head screw (1040) can be used as forcing screw.
- If a mechanical seal is installed, see description "Removal and Fitting of Mechanical Seal" after Page 12.0.

Fitting:

- Apply grease into the bore of the connecting shaft (1050) to avoid rust (e.g. TCE-Metallic 600).
- Assemble the shaft seal housing (7005) and mechanical seal (7010) together with connecting shaft (1050) and set ring (1035) with drive stool (0085) and push connecting shaft (1050) on to the drive shaft.
  At this please observe the installation direction of set ring (1035) (please see mark).
- If a mechanical seal is installed, see description "Removal and Fitting of Mechanical Seal" after Page 12.0.
- Connect the connecting shaft (1050) and the drive shaft by pin (1030).
  Push set ring (1035) on pin (1030).

12.1 Removal and Fitting of the Single Mechanical Seal

- **Carefully** slide out mechanical seal housing (7005) together with the parts of the mechanical seal contained in it from connecting shaft (1050).
- **Carefully** push mechanical seal (7010) stationary seat out of mechanical seal housing (7005).

Refitting is a simple reversal of the above procedure.

- To reduce frictional forces during seal assembly, apply some glycerine to the shaft and the seal housing in the area of the gaskets.
- Special care must be taken when fitting double PTFE-coated gaskets: the **joint** of the outer coating must point away from the seal assembly direction, otherwise the coating may open or be pulled off!



Ensure that the distribution of pressure is uniform when inserting the pressure sensitive counter rings. When inserting larger rings, use a suitable mandrel.
Do not allow any foreign bodies to get between the sliding surfaces.

- Exactly keep to the seal installation dimensions and ensure that the sealing faces are correctly pressed together (see table on sectional drawing W 209.000 or W 210.000).
- Insert mechanical seal (7010) stationary seat into mechanical seal housing (7005).
- Insert mechanical seal housing (7005) together with the stationary seat into the drive stool **without the installed connecting shaft (1050).**
- If necessary take the installation dimension from the table and add the thickness S of the set ring (7086) when existing.
- Mark this installation dimension on the connecting shaft (1050).
- Fix the rotating unit of the mechanical seal (7010) on the connceting shaft (1050) depending on the installation dimension so that the rotating unit of the mechanical seal (7010) or the set ring (7086) is at the mark.
- Insert connecting shaft (1050) with the rotating unit of the mechanical seal (7010) into drive stool (0085) and install lip seal (7091, if existing. Push the set ring (1035) on to connecting shaft (1050) and observe at this the installation direction (see mark).
Push connecting shaft (1050) on to the drive shaft and connect with pin (1030). Push the set ring (1035) on pin (1030).

Inspection Opening at the Pump Housing

gray cast iron model on from size NM045

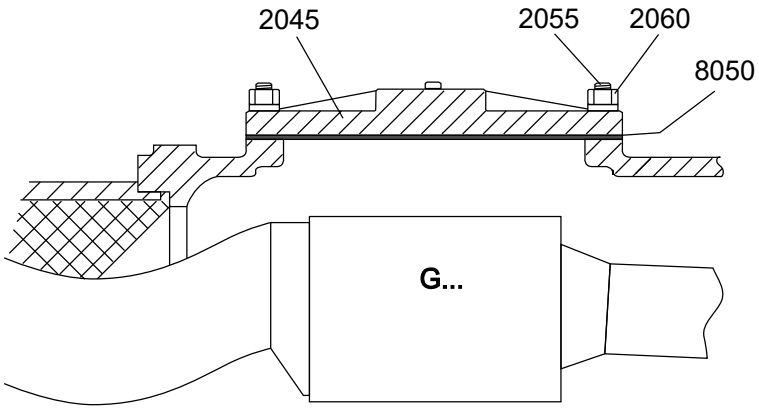

design for welded housings – nominal size DN 76,1 – ISO 2852

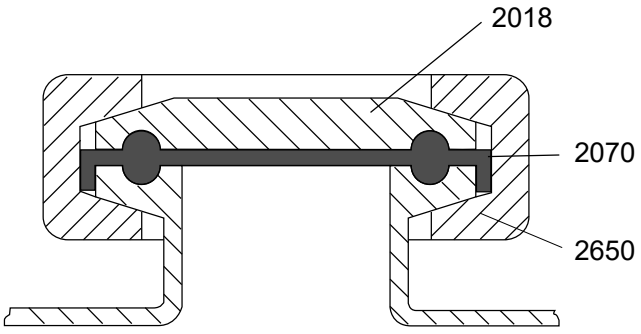

14 Recommended Spare Parts

In general, we have all spare parts in stock. Our subsidiaries and exclusive representatives also hold a certain stock. For special cases and when short waiting periods are not acceptable, we recommend to keep an amount of spare parts, corresponding to the pump, in stock on site (please see table below).

- **Rotor**
- **Stator**
- **Elastomer parts as O-rings and sleeves**
- **joint parts**
- **shaft seals.**

To avoid mistakes in delivery, please identify the parts by their position number shown in the spare parts list or on the sectional drawing.

For placing a spare parts order, it is absolutely necessary to give the following details:

Pieces (see column 2) - Designation (see column 3) - Identification Number (see column 4)

The column details are taken from the spare parts list. See example.

Example:

SPARE PARTS LIST		10.05.94		10:50:18	Page: 1 / 5
1		2		3	4
PART EURO	POS.	Quantity	Unit	Designation Size – Norm – Material/Surface	Ident-Number
3410	0005	1,000	pc	bearing housing	850221
2910	0010	1,000	pc	distance sleeve	850220
3520	0015	1,000	pc	bearing cover	850222

15 Sectional Drawings and List of Spare Parts

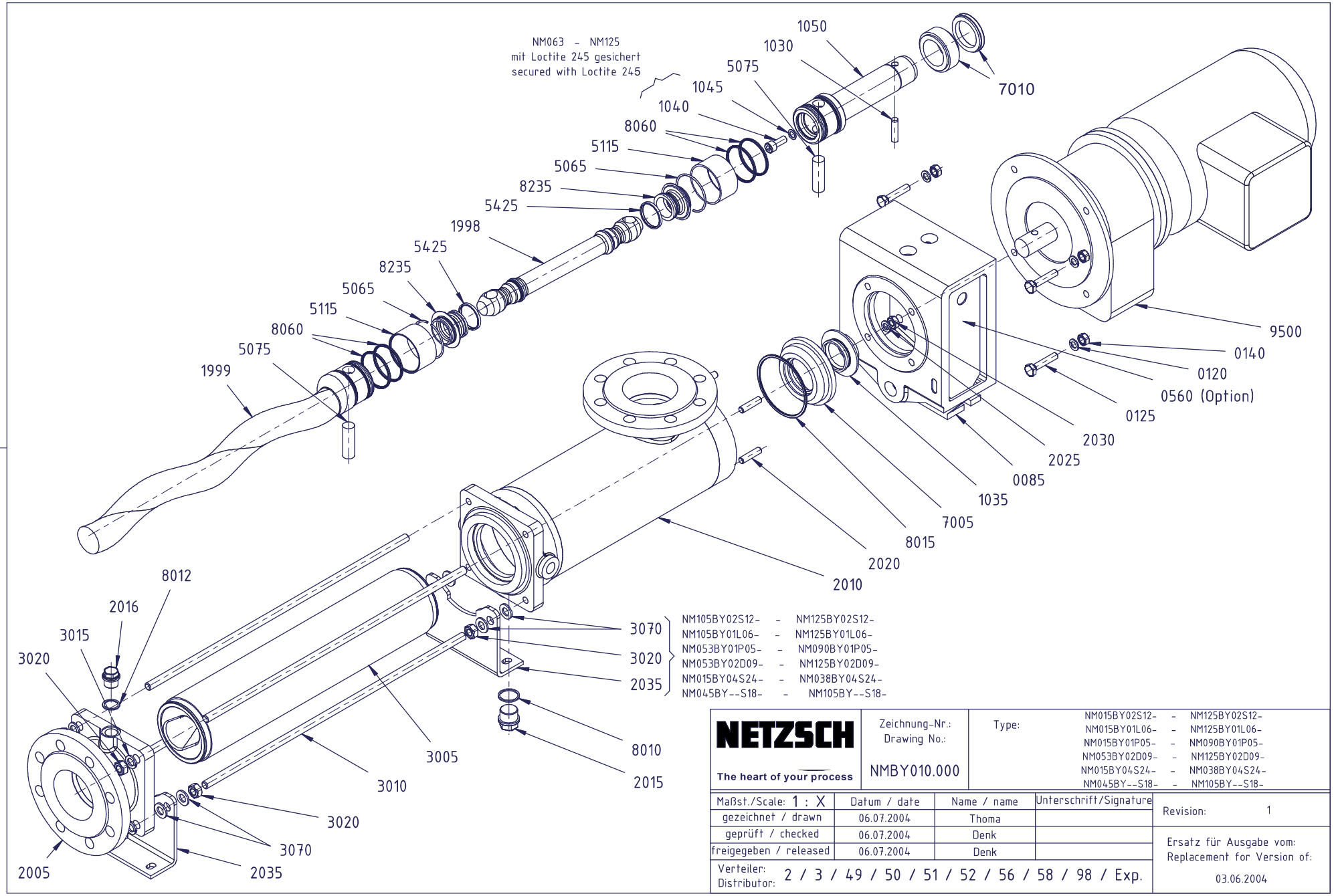

NETZSCH

The heart of your process

Zeichnung-Nr.: Drawing No.:	NMBY010.000
Type:	NM015BY02S12- - NM125BY02S12- NM015BY01L06- - NM125BY01L06- NM015BY01P05- - NM090BY01P05- NM053BY02D09- - NM125BY02D09- NM015BY04S24- - NM038BY04S24- NM045BY--S18- - NM105BY--S18-

Maßst./Scale: 1 : X	Datum / date	Name / name	Unterschrift/Signature
gezeichnet / drawn	06.07.2004	Thoma	
geprüft / checked	06.07.2004	Denk	
freigegeben / released	06.07.2004	Denk	

Verteiler: Distributor: 2 / 3 / 49 / 50 / 51 / 52 / 56 / 58 / 98 / Exp.

Revision: 1

Ersatz für Ausgabe vom: Replacement for Version of: 03.06.2004

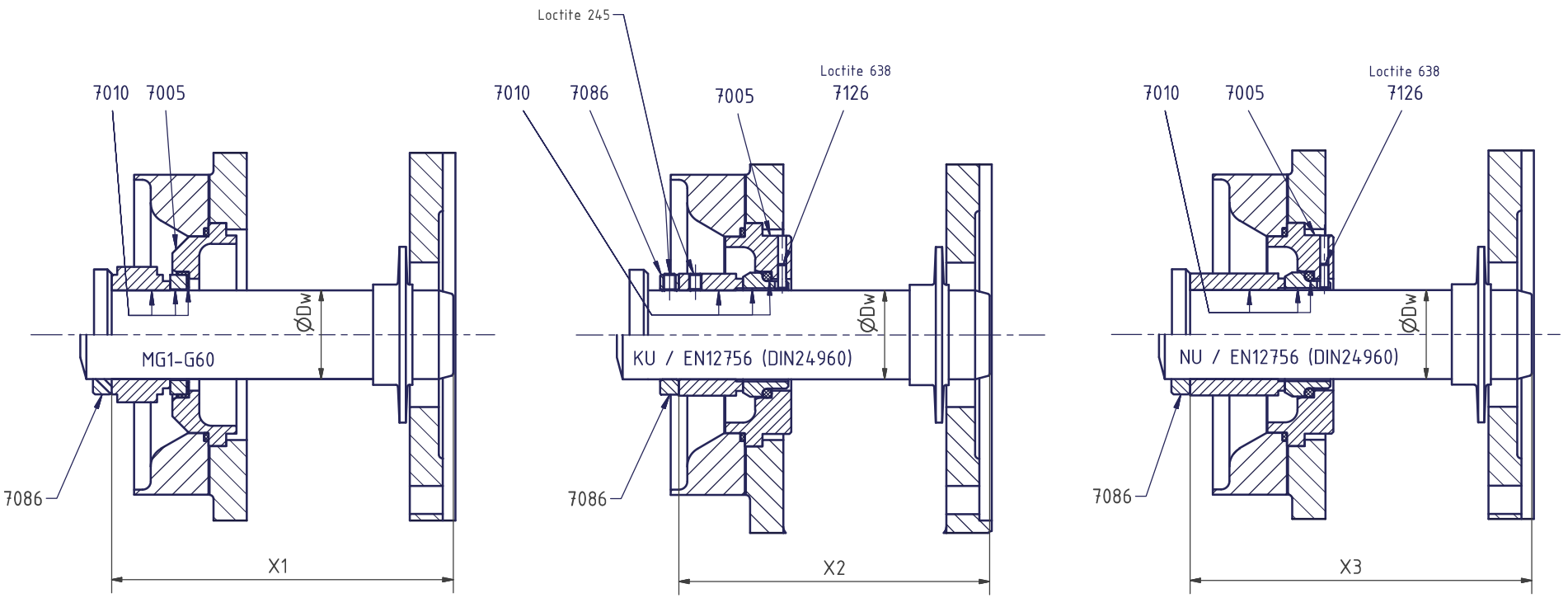

Dw 35 - Dw 100

Dw	MG1-G60	KU / EN12756 (DIN24960)	NU / EN12756 (DIN24960)
	X1	X2	X3
25	116,5	116,5	–
35	152,1	139,6	152,1
40	147,5	137,5	147,5
43	165,5	150,5	165,5
55	181	158,5	181
65	201,5	174	201,5
70	207	187	207
85	219	189	219
100	249	224	249

NETZSCH

Zeichnung-Nr.: Drawing No.: W209.000

Einf. wirk. GLRD
Single Mechanical Seal

Type: NM015B/S- (P) - NM105B/S- (P)

Maßst./Scale: 1 : X	Datum / date	Name / name	Unterschrift/Signature
gezeichnet / drawn	29.07.2011	Thoma	
geprüft / checked	29.07.2011	Denk	
freigegeben / released	29.07.2011	Denk	

Verteiler: Distributor: 2 / 3 / 49 / 50 / 51 / 52 / 58 / 94 / 95 / 97 / 98 / exp

Revision: 5

Ersatz für Ausgabe vom: Replacement for Version of: 20.08.2009

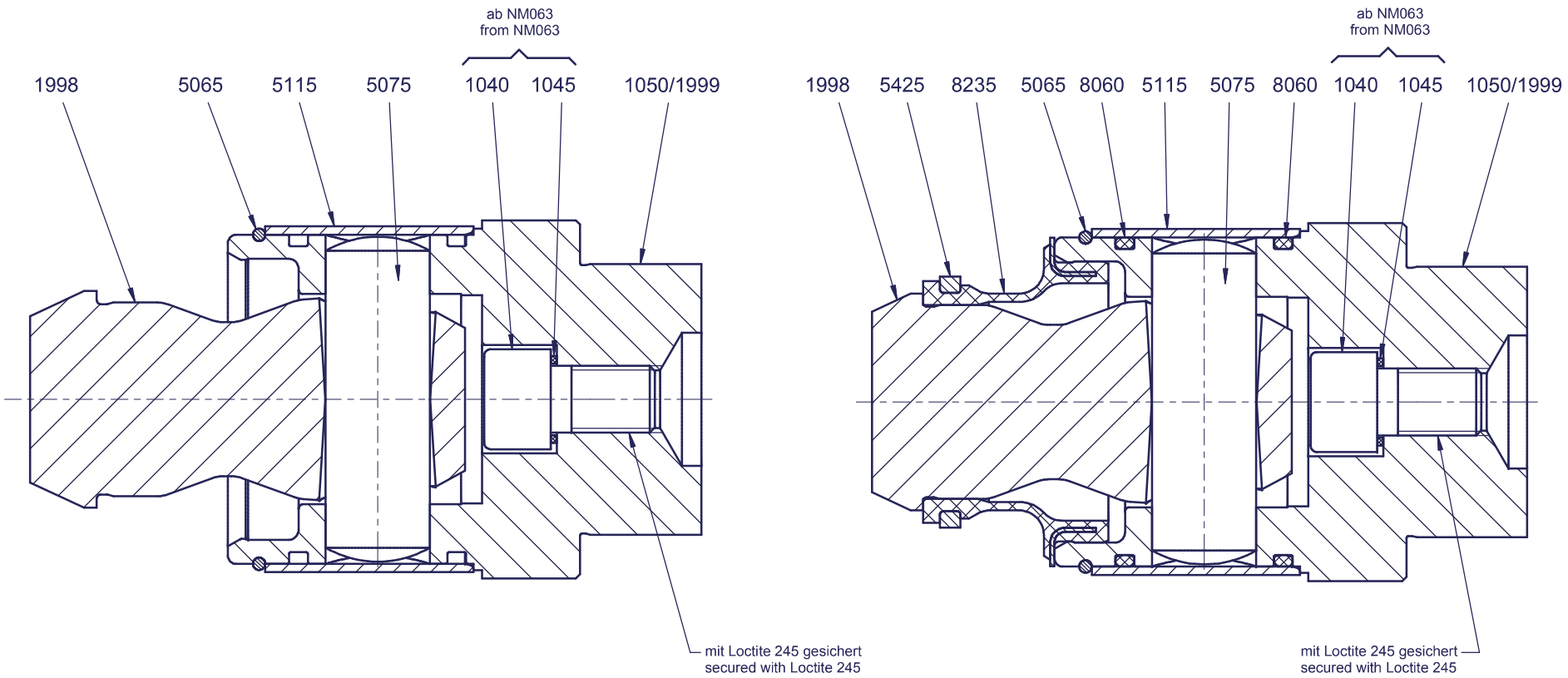

nur/only NM015B- (P)

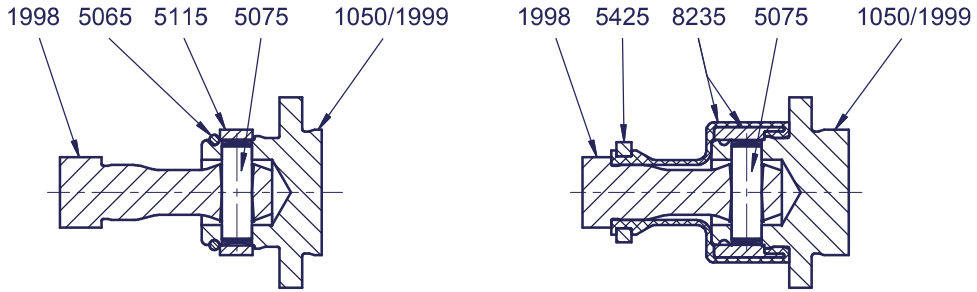

NETZSCH The heart of your process	Zeichnung-Nr.: Drawing No.: G146.000	Bolzengelenk ohne/mit SM-Bolzenabdichtung Pin Joint without/with SM-Pin Joint Seal			Type: NM015B- (P) - NM105B- (P)
Maßst./Scale: 1 : X	Datum / date	Name / name	Unterschrift/Signature	Revision:	1
gezeichnet / drawn	14.10.2003	Preintner			
geprüft / checked	14.10.2003	Thoma		Ersatz für Ausgabe vom: Replacement for Version of:	
freigegeben / released	14.10.2003	Thoma			
Verteiler: Distributor:	2 / 3 / 50 / 51 / 52 / 58 / 98			23.05.2003	

Inquiry/Order Form

NETZSCH

►Please copy before use

☐ Inquiry ☐ Order

NETZSCH Canada, Inc.
500 Welham Road
Barrie, ON, L4N 8Z7

Tel: 1-705-797-8426
Fax:1-705-797-8427
ntc@netzsch.com
www.pumps.netzsch.com

Company Address

Person in Charge

Tel:

Fax:

Delivery address

Billing address

Important: Please fill in		
Machine #	Pump Com #	Type
Quantity	Pos. No.	Description

Required delivery date_____

Address_____

Date_____ Signature/co. stamp_____

DATA SHEET

Three Phase Induction Motor - Squirrel Cage

Customer	:

Product line	: NEMA Premium Efficiency Three-Phase	Product code :	14337968

Frame	: 143/5TC	Cooling method	: IC411 - TEFC
Insulation class	: F	Mounting	: F-1
Duty cycle	: Cont.(S1)	Rotation¹	: Both (CW and CCW)
Ambient temperature	: -20°C to +40°C	Starting method	: Direct On Line
Altitude	: 1000 m.a.s.l.	Approx. weight³	: 31.5 kg
Protection degree	: IP55	Moment of inertia (J)	: 0.0041 kgm²
Design	: B		

Output [HP]		1
Poles		4
Frequency [Hz]		60
Rated voltage [V]		575
Rated current [A]		1.14
L. R. Amperes [A]		9.84
LRC [A]		8.6x(Code M)
No load current [A]		0.748
Rated speed [RPM]		1760
Slip [%]		2.22
Rated torque [kgfm]		0.414
Locked rotor torque [%]		290
Breakdown torque [%]		370
Service factor		1.15
Temperature rise		80 K
Locked rotor time		32s (cold) 18s (hot)
Noise level²		51.0 dB(A)
Efficiency (%)	25%	
	50%	80.0
	75%	82.5
	100%	85.5
Power Factor	25%	
	50%	0.57
	75%	0.70
	100%	0.77

		Drive end	Non drive end
Bearing type	:	6205 2RS	6204 2RS
Sealing	:	Oil Seal	Lip Seal
Lubrication interval	:	-	-
Lubricant amount	:	-	-
Lubricant type	:	Mobil Polyrex EM	

Foundation loads

Max. traction : 27 kgf

Max. compression : 59 kgf

Notes

This revision replaces and cancel the previous one, which must be eliminated.
(1) Looking the motor from the shaft end.
(2) Measured at 1m and with tolerance of +3dB(A).
(3) Approximate weight subject to changes after manufacturing process.
(4) At 100% of full load.

These are average values based on tests with sinusoidal power supply, subject to the tolerances stipulated in NEMA MG-1.

Rev.	Changes Summary	Performed	Checked	Date

Performed by				
Checked by			Page	Revision
Date	17/05/2022		1 / 3	

This document is exclusive property of WEG S/A. Reprinting is not allowed without written authorization of WEG S/A.
Subject to change without notice

Customer :

Thermal protection

ID	Application	Type	Quantity	Sensing Temperature
1	Winding	Thermostat - 2 wires	1 x Phase	155 ºC

Rev.	Changes Summary	Performed	Checked	Date

Performed by				
Checked by			Page	Revision
Date	17/05/2022		2 / 3	

This document is exclusive property of WEG S/A. Reprinting is not allowed without written authorization of WEG S/A.
Subject to change without notice

LOAD PERFORMANCE CURVE

Three Phase Induction Motor - Squirrel Cage

Customer	:

Product line	: NEMA Premium Efficiency Three-Phase	Product code :	14337968

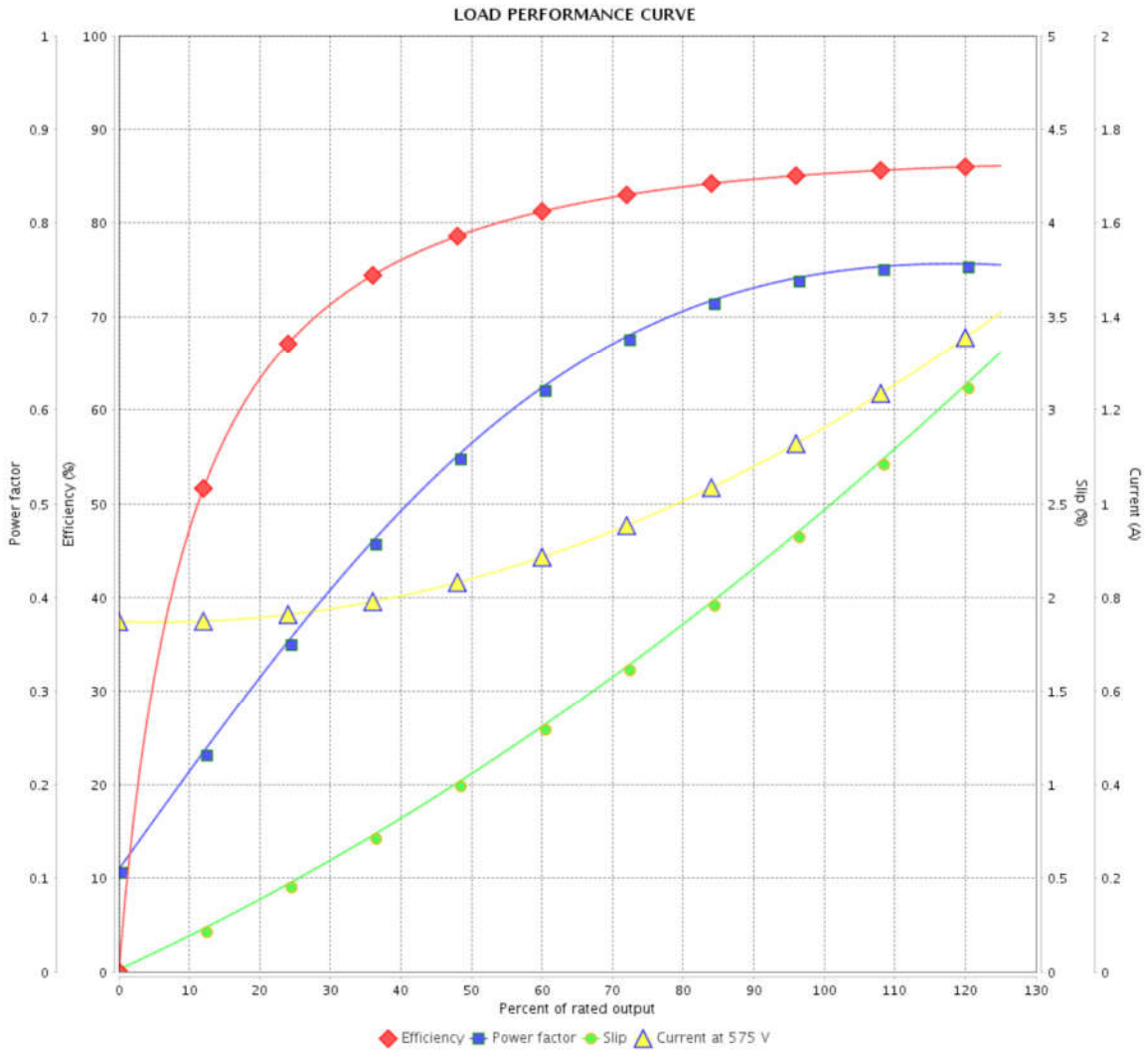

Performance	: 575 V 60 Hz 4P

Rated current	: 1.14 A	Moment of inertia (J)	: 0.0041 kgm²
LRC	: 8.6	Duty cycle	: Cont.(S1)
Rated torque	: 0.414 kgfm	Insulation class	: F
Locked rotor torque	: 290 %	Service factor	: 1.15
Breakdown torque	: 370 %	Temperature rise	: 80 K
Rated speed	: 1760 rpm	Design	: B

Rev.	Changes Summary	Performed	Checked	Date

Performed by				
Checked by			Page	Revision
Date	17/05/2022		3 / 3	

This document is exclusive property of WEG S/A. Reprinting is not allowed without written authorization of WEG S/A.
Subject to change without notice

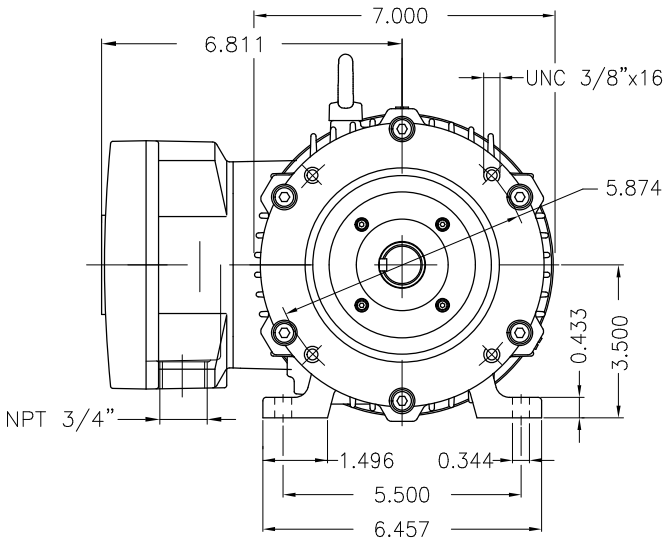

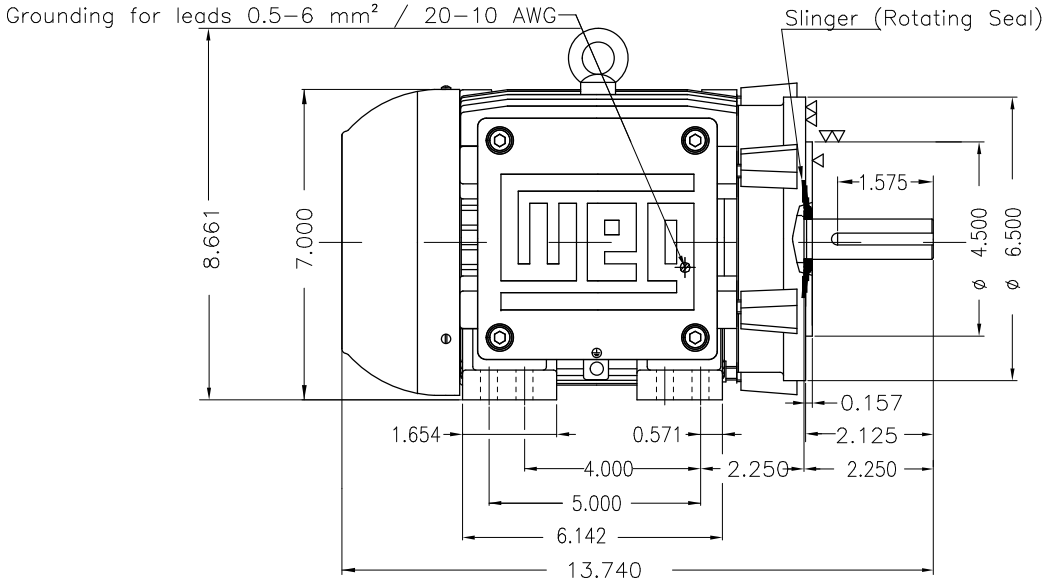

DE Shaft End

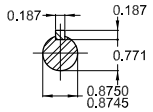

Color RAL 5009
Painting plan 202P
Mounting NEMA F-1
Mounting B34R(D)

1 HP 04 Poles 60 Hz | A

ECM	LOC	SUMMARY OF MODIFICATIONS	EXECUTED	CHECKED	RELEASED	DATE	VER

EXECUTED DATAVIEWERUSER
CHECKED
RELEASED
REL DT.

THREE PH. MOTOR EXPLOSION PROOF PREM. EFF.
FRAME 143/5TC IP55 TEFC

PREVIEW
WDD

WMO Jaragua do Sul Product Engineering

SHEET 1 / 1

Dimensions in Inches
XME A3

WEG's property. Forbidden reproduction without previous authorization.

MOTORS AND DRIVES

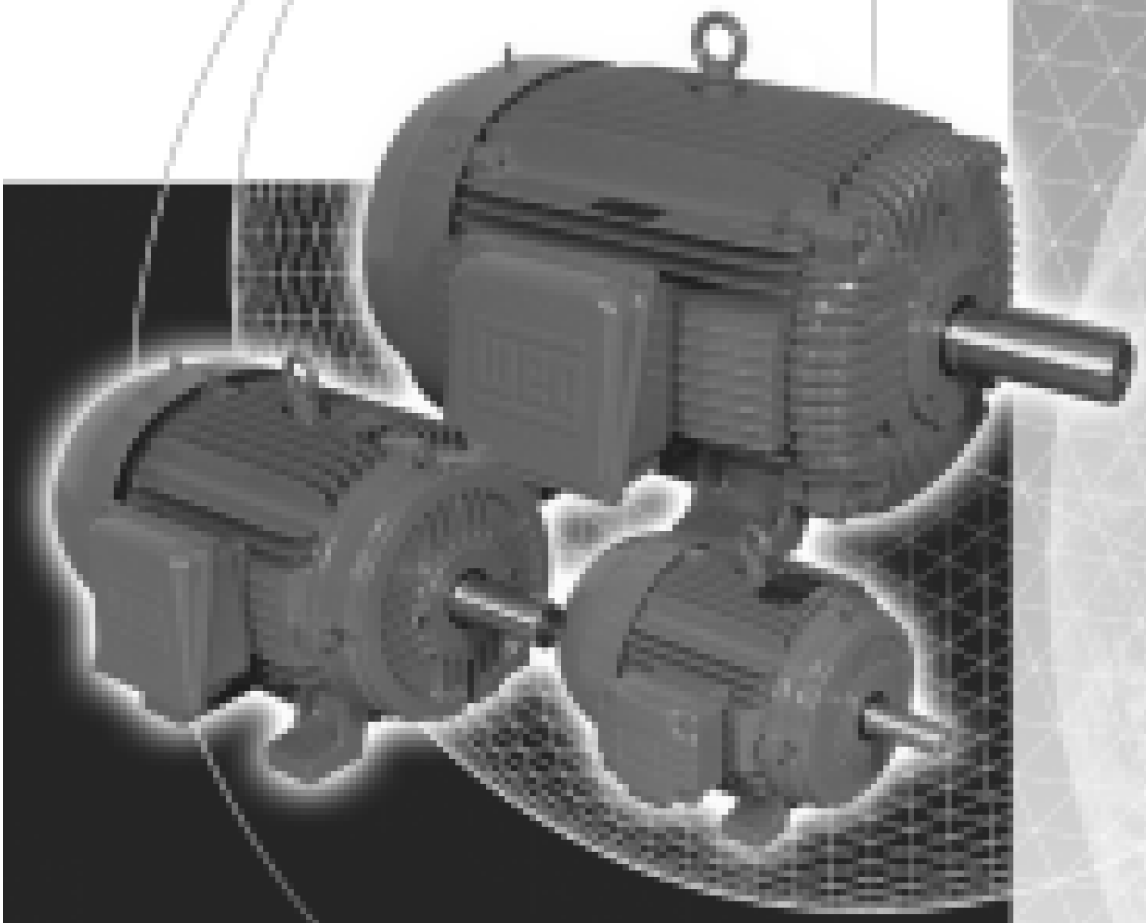

INSTALLATION AND MAINTENANCE INSTRUCTIONS FOR ELECTRIC MOTORS

Frames 143/5T - 586/7T

QUALITY SYSTEM ISO9001 WEG MOTORES

ISO 9001



READ CAREFULLY THIS MANUAL BEFORE INSTALLING THE MOTOR.

RECEIVING CHECK

✓ Check if any damage has occured during transportation.
✓ Check nameplate data.
✓ Remove shaft locking device (if any) before operating the motor.
✓ Turn the shaft with the hand to make sure if it is turning freely.

HANDLING AND TRANSPORTATION

1 - General



MOTORS MUST NOT BE LIFTED BY THE SHAFT, BUT BY THE EYE BOLTS WHICH ARE PROPERLY DESIGNED TO SUPPORT THE MOTOR WEIGHT.

Lifting devices, when supplied, are designed only to support the motor. If the motor has two lifting devices then a double chain must be used to lift it.

Lifting and lowering must be done gently without any shocks, otherwise the bearings can get damaged.



DURING TRANSPORTATION, MOTORS FITTED WITH ROLLER OR ANGULAR CONTACT BEARINGS ARE PROTECTED AGAINST BEARING DAMAGES WITH A SHAFT LOCKING DEVICE.



THIS LOCKING DEVICE MUST BE USED ON ANY FURTHER TRANSPORT OF THE MOTOR, EVEN WHEN THIS MEANS TO UNCOPULE THE MOTOR FROM THE DRIVEN MACHINE.

STORAGE

If motors are not immediately installed, they must be stored in dry places, free of dust, vibrations, gases, corrosive smokes, under constant temperature and in normal position free from other objects.

In case the motors are stored for more than two years, the bearings must be changed or the lubrication grease must be totally replaced after cleaning.

Single phase motors when kept in stock for 2 years or more must have their capacitors replaced (if any).

We recommend to turn the shaft (by hands) at least once a month, and to measure the insulation resistance before installing it, in cases of motors stored for more than 6 months or when subject to high humidity areas.

If motor is fitted with space heaters, these should be switched on.

Insulation Resistance Check

Measure the insulation resistance before operating the motor and/or when there is any sign of humidity in the winding.

The resistance measured at 25°C (77°F) must be:

Ri > (20 x U) / (1000 + 2P) [Mohm] (measured with a MEGGER at 500 V d.c.); where U = voltage (V); P = power (kW).

If the insulation resistance is less than 2 megaohms, the winding must be dried according to the following:
✓ Warm it up inside an oven at a minimum temperature of 80°C (176°F) increasing 5°C (41°F) every hour until 105°C (221°F), remaining under this temperature for at least one hour. Check if the stator insulation resistance remains constant within the accepted values. If not, stator must be reimpregnated.

INSTALLATION

1 - Safety

All personnel involved with electrical installations, either handling, lifting, operation or maintenance must be well informed and up-to-dated concerning the safety standard and principles that govern the work and carefully follow them.

We strongly recommend that these jobs are carried out by qualified personnel.



MAKE SURE THAT THE ELECTRIC MOTORS ARE SWITCHED OFF BEFORE STARTING ANY MAINTENANCE SERVICE.

Motors must be protected against accidental starts.

When performing any maintenance service, disconnect the motor from the power supply. Make sure all accessories have been switched off and disconnected.

Do not change the regulation of the protecting devices to avoid damaging.



LEAD CONNECTION IN SULATION INSIDE THE TERMINAL BOX MUST BE DONE WITH AN INSULATING MATERIAL COMPATIBLE WITH MOTOR THERMAL CLASS WHICH IS SHOWN ON THE MOTOR NAMEPLATE.

2 - Operating Conditions

Electric motors, in general, are designed for operation at an altitude of 1000m above sea level for an ambient temperature between 25°C (77°F) and 40°C (104°F). Any variation is stated on the nameplate.



COMPARE THE CURRENT, VOLTAGE, FREQUENCY, SPEED, OUTPUT AND OTHER VALUES DEMANDED BY THE APPLICATION WITH THE DATA GIVEN ON THE NAMEPLATE.

Motors supplied for hazardous locations must be installed in areas that comply with that specified on the motor nameplate.



KEEP AIR INLET AND OUTLET FREE AND CLEAN. THE AIR BLOWN OUT BY THE MOTOR SHALL NOT ENTER AGAIN. THE DISTANCE BETWEEN THE AIR INLET AND THE WALL MUST BE AROUND ¼ OF THE INLET OPENING DIAMETER.

3 - Foundation

Motors provided with feet must be installed on though foundations to avoid excessive vibrations.

The purchaser is fully responsible for the foundation.

Metal parts must be painted to avoid corrosion.

The foundation must be uniform and sufficiently tough to support any short circuit strengths. It must be designed in such a way to stop any vibration originated from resonance.

4 - Drain Holes

Make sure the drains are placed in the lower part of the motor when the mounting configuration differs from that specified on the motor purchase order.

5 - Balancing

WEG MOTORS ARE DYNAMICALLY BALANCED, WITH HALF KEY AT NO LOAD AND UNCOUPLED.

Transmission elements such as pulleys, couplings, etc must be dynamically balanced with half key before installation. Use always appropriate tools for installation and removal.

6 - Alignment

ALIGN THE SHAFT ENDS AND USE FLEXIBLE COUPLING, WHENEVER POSSIBLE.

Ensure that the motor mounting devices do not allow modifications on the alignment and further damages to the bearings.

When assembling a half-coupling, be sure to use suitable equipment and tools to protect the bearings.

Suitable assembly of half-coupling: check that clearance Y is less than 0.05mm and that the difference X1 to X2 is less than 0.05m as well.

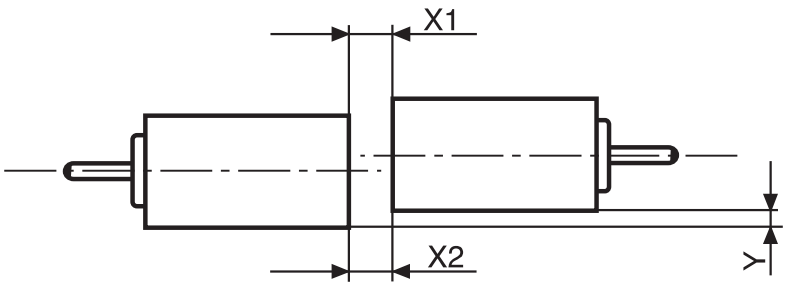

Note: The "X" dimension must be at least 3mm.

7 - Belt Drive

When using pulley or belt coupling the following must be observed:
✓ Belts must be tighten just enough to avoid slippage when running, according to the specifications stated on the belt supplier recommendation.

WARNING:
Excessive tension on the pulleys will damage the bearings and lead to a probable shaft rupture.

8 - Connection

WARNING: Voltage may be connected at standstill inside the terminal box for heating elements or direct winding heating.

WARNING: The capacitor on single-phase motors can retain a charge which appears across the motor terminals, even when the motor has reached standstill.



A WRONG CONNECTION CAN BURN THE MOTOR.

Voltage and connection are indicated on the nameplate. The acceptable voltage variation is ± 10%, the acceptable frequency variation is ± 5% and the total acceptable variation is ± 10%.

9 - Starting Methods

The motor is rather started through direct starting. All Weg motors must be connected as shown on the motor nameplate, failure to follow the motor nameplate could lead to motor failure.

In case this is not possible, use compatible methods to the motor load and voltage.

✓ 3 lead single voltage and 9 lead dual voltage motors can be started as follows:
Full Voltage Direct On Line.
Auto-Transformer Starting.
Electronic Soft-Starting.
VFD Starting - subject to verification and application analysis.

✓ 6 lead single voltage motors and 12 lead dual voltage motors can be connected as follows:
Full Voltage Direct On Line.
WYE/DELTA Starting.
Auto-Transformer Starting.
Electronic Soft-Starting.
VFD Starting - subject to verification and application analysis.

The rotation direction is clockwise if the motor is viewed from DE side and if the phases are connected according to the sequence L1, L2, L3.

To change the rotation direction, interchange two of the connecting leads.



THE CONNECTION TO THE POWER SUPPLY MUST BE DONE BY QUALIFIED PERSONNEL AND WITH FULL ATTENTION TO ASSURE A SAFE AND PERMANENT CONNECTION. AFTER CONNECTING THE MOTOR, CHECK FOR ANY STRANGE BODY INSIDE THE TERMINAL BOX. THE CABLE INLETS NOT IN USE MUST BE CLOSED.

Make sure to use the correct cable dimension, based on the rated current stamped on the motor nameplate.



BEFORE ENERGIZING THE TERMINALS, CHECK IF THE EARTHING IS MADE ACCORDING TO THE ACTUAL STANDARDS. THIS IS ESSENTIAL AGAINST ACCIDENT RISKS.

When the motor is supplied with protective or monitor temperature device such as thermostats, thermistors, thermal protector, etc, connect their terminals to the corresponding devices on the control panel.

10- Start-Up



THE KEY MUST BE FASTENED OR REMOVED BEFORE STARTING THE MOTOR.

a) The motor must start and operate smoothly. In case this does not occur, turn it off and check the connections and the mounting before starting it again.

b) If there is excessive vibration, check if the fastening screws are correctly fastened. Check also if the vibration comes from a neighbour machine. Periodical vibration checks must be done.

c) Run the motor under rated load for a short period of time and compare if the running current is equal to that stamped on the nameplate.

MAINTENANCE



WARNING:
SAFETY CHECK LIST.

1 - General Inspection

- ✓ Check the motor periodically.
- ✓ Keep the motor clean and assure free air flow.
- ✓ Check the seals or V Ring and replace them, if required.
- ✓ Check the connections as well as supporting screws.
- ✓ Check the bearings and observe:
  Any excessive noise, bearing temperature and grease condition.
- ✓ When a changing, under normal conditions, is detected, check the motor and replace the required parts.
  The frequency of the inspections depends on the motor type and on the application conditions.

LUBRICATION



FOLLOW THE REGREASING INTERVALS. THIS IS FUNDAMENTAL FOR PROPER MOTOR OPERATION.

1 - Machines without Grease Nipples

In these cases the regreasing shall be done at the preventive maintenance job observing the following aspects:

✓ Disassemble carefully the motors.
✓ Take all the grease out.
✓ Wash the bearing with querosene or diesel.
✓ Regrease the bearing immediately.

2 - Machines Fitted with Grease Nipples

It is strongly recommended to grease the machine while running. This allows the grease renewal in the bearing housing. When this is not possible due to turning parts by the grease device (pulleys, bushing, etc) that offer some risk to the physical integrity of the operator, proceed as follows:

✓ Clean the area near to the grease nipple.
✓ Put approximately half of the total grease and run the motor for 1 minute at full speed. Then turn off the motor and pump the rest of the grease.
✓ The injection of all the grease with the motor in standstill can make the grease penetrate into the motor, through the inner seal of the bearing housing.

When regreasing, use only special bearing grease with the following properties:

RELUBRICATION INTERVALS RECOMMENDED - POLYREX® EM GREASE (ESSO/EXXON)

Frame	Amount of grease (g)	3600 rpm	3000 rpm	1800 rpm	1500 rpm	1200 rpm	1000 rpm	900 rpm	750 rpm	720 rpm	600 rpm	500 rpm
Relubrication intervals in hours - ball bearings												
254/6T	*13*	*15700*	*18100*	*20000*	*20000*	*20000*	*20000*	*20000*	*20000*	*20000*	*20000*	*20000*
284/6T	*18*	*11500*	*13700*	*20000*	*20000*	*20000*	*20000*	*20000*	*20000*	*20000*	*20000*	*20000*
324/6T	*21*	*9800*	*11900*	*20000*	*20000*	*20000*	*20000*	*20000*	*20000*	*20000*	*20000*	*20000*
364/5T	*27*	*3600*	*4500*	*9700*	*11600*	*14200*	*16400*	*17300*	*19700*	*20000*	*20000*	*20000*
404/5TS	*27*	*3600*	*4500*	*9700*	*11600*	*14200*	*16400*	*17300*	*19700*	*20000*	*20000*	*20000*
444/5TS	*27*	*3600*	*4500*	*9700*	*11600*	*14200*	*16400*	*17300*	*19700*	*20000*	*20000*	*20000*
504/5TS	*27*	*3600*	*4500*	*9700*	*11600*	*14200*	*16400*	*17300*	*19700*	*20000*	*20000*	*20000*
586/7TS	*27*	*3600*	*4500*	*9700*	*11600*	*14200*	*16400*	*17300*	*19700*	*20000*	*20000*	*20000*
Relubrication intervals in hours - cylindrical roller bearings												
324/5T	*21*	*9800*	*11900*	*20000*	*20000*	*20000*	*20000*	*20000*	*20000*	*20000*	*20000*	*20000*
364/5T	*27*			*9700*	*11600*	*14200*	*16400*	*17300*	*19700*	*20000*	*20000*	*20000*
404/5T	*34*			*6000*	*7600*	*9500*	*11600*	*13800*	*15500*	*15500*	*17800*	*20000*
444/5T	*45*			*4700*	*6000*	*7600*	*9800*	*12200*	*13700*	*13700*	*15700*	*20000*
447/5T	*45*			*4700*	*6000*	*7600*	*9800*	*12200*	*13700*	*13700*	*15700*	*20000*
504/5T	*45*			*4700*	*6000*	*7600*	*9800*	*12200*	*13700*	*13700*	*15700*	*20000*
586/7T	*60*			*3300*	*4400*	*5900*	*7800*	*10700*	*11500*	*11500*	*13400*	*17300*

WARNING:

The table above is specifically intended for relubrication with Polyrex® EM grease and bearing absolute operating temperature of:

✓ 70°C (158°F) for 254/6T to 324/6T frame motors;
✓ 85°C (185°F) for 364/5T to 586/7T frame motors.

For every 15°C (59°F) above these limits, relubrication interval must be reduced by half.

Shielded bearing (ZZ) are lubricated for bering's life as long as they operate under normal ambient conditions and temperature of 70°C(158°F).



WE RECOMMEND TO USE BALL BEARINGS FOR MOTORS DIRECTLY COUPLED TO THE LOAD.



WARNING:
EXCESS OF GREASE CAN CAUSE BEARING OVERHEATING RESULTING IN COMPLETE DAMAGE.

Compatibility of Polyrex® EM grease with other types of grease:

Containing polyurea thickener and mineral oil, the Polyrex® EM grease is compatible with other types of grease that contain:

- ✓ Lithium base or complex of lithium or polyurea and highly refined mineral oil;
- ✓ Inhibitor additive against corrosion, rust and anti-oxidant additive.

Notes:

- ✓ Although Polyrex® EM is compatible with the types of grease given above, we do no recommend to mix it with any other greases.
- ✓ If you intend to use a type of grease different than those recommended above, first contact WEG.
- ✓ On applications (with high or low temperatures, speed variation, etc), the type of grease and relubrication interval are given on an additicional nameplate attached to the motor.
- ✓ Vertical mounted motors must have the relubrication intervals reduced by half.



THE USE OF STANDARD MOTORS IN SPECIFIC AREAS OR SPECIAL APPLICATIONS MUST BE DONE BY CONSULT TO THE GREASE MANUFACTURER OR WEG.

ASSEMBLY AND DISASSEMBLY

Disassembly and assembly must be done by qualified personnel using only suitable tools and appropriated methods. The stator grips must be applied over the side face of the inner ring to be disassembled or over and adjacent part.

It is essential that the bearings disassembly and assembly be done under cleanning conditions to ensure good operation

and to avoid damages. New bearings shall only be taken out from their cases when assembling them.

Before installing a new bearing it is required to check the shaft fitting for any sharp edge or strike signals.

For bearing assembly, warm their inner parts with suitable equipment - inductive process - or use suitable tools.

SPARE PARTS

When ordering spare parts, please specify the full type designation and product code as stated on the motor nameplate.

Please also inform the motor serial number stated on the nameplate.

MOTORS FOR HAZARDOUS LOCATIONS

Besides the recommendations given previously, these ones must be also followed:



THE SPECIFICATION OF THE MOTOR INSTALLATION PLACE IS FOR CUSTOMER'S RESPONSIBILITY, WHO WILL ALSO DETERMINE THE ENVIRONMENT CHARACTERISTICS.

Motors for hazardous locations are manufactured according to specific standards for such environments and they are certified by worldwide certifying entities.

1 - Installation

The complete installation must follow procedures given by the local legislation in effect.



THE INSTALLATION OF HAZARDOUS LOCATION MOTORS MUST BE CARRIED OUT BY SKILLED PEOPLE, AND THE THERMAL PROTECTION MUST BE ALWAYS INSTALLED, EITHER INSIDE OR OUTSIDE THE MOTOR, OPERATING AT THE RATED CURRENT.

2 - Maintenance

Maintenance must be carried out by repair shops authorized by WEG.

Repair shops and people without WEG's authorization who will perform any service or hazardous location motors will be fully responsible for such service as well as for any consequential damage.



ANY ELECTRICAL OR MECHANICAL MODIFICATION MADE ON HAZARDOUS LOCATION MOTORS WILL VOID THE CERTIFICATION.

When performing maintenance, installation or relubrication, follow these instructions:

- ✓ Check if all components are free of edges, knocks or dirt.
- ✓ Make sure all parts are in perfect conditions.
- ✓ Lubricate the surfaces of the endshield fittings with protective oil to make the assembly easier.
- ✓ Use only rubber hammer to fit the parts.
- ✓ Check for correct bolts tightening.
- ✓ Use clearance calibrator for correct T-box fitting (smaller than 0.05mm).



DO NOT REUSE DAMAGED OR WORN PARTS. REPLACE THEM BY NEW ONES SUPPLIED BY THE FACTORY.

MOTORS DRIVEN BY VFD

Applications using VFD´s without filter can affect motor performance as follows:

- ✓ Lower efficiency.
- ✓ Higher vibration.
- ✓ Higher noise level.
- ✓ Higher rated current.
- ✓ Higher temperature rise.
- ✓ Reduced motor insulation.
- ✓ Reduced bearing life.

1 - Standard Motors

- ✓ Voltages lower than 440V do not require filter.
- ✓ Voltages equal or higher than 440V or lower than 575V require filter for motor power supply cables longer than 20 meters.
- ✓ Voltages equal or higher than 575V require filter for any size of power supply cables.



IF SUCH RECOMMENDATIONS ARE NOT FOLLOWED ACCORDINGLY, MOTOR WARRANTY WILL BE VOID.

2 - Inverter Duty Motors

- ✓ Check power supply voltage of the forced cooling set.
- ✓ Filters are not required.

WARRANTY TERMS
SERIES AND ENGINEERING PRODUCTS

WEG warrants its products against defects in workmanship and materials for 18 months from the invoice date issued by the factory, authorized distributor or agent limited to 24 months from manufacturing date independent of installation date as long as the following items are fulfilled accordingly:
- Proper transportation, handling and storage;
- Correct installation based on the specified ambient conditions and free of corrosive gases;
- Operation under motor capacity limits;
- Observation of the periodical maintenance services;
- Repair and/or replacement effected only by personnel duly authorized in writing by WEG;
- The failed product be available to the supplier and/or repair shop for a required period to detect the cause of the failure and corresponding repair;
- Immediate notice by the purchaser about failures occured and that these are accepted by WEG as manufacturing defects.

This warranty does not include disassembly services at the urchaser facilities, transportation costs with product, tickets, accomodation and meals for technical personnel when requested by the customer. The warranty service will be only carried out at WEG Authorized Repair Shops or at WEG´s facilities.

Components whose useful life, under normal use, is shorter than the warranty period are not covered by these warranty terms.

The repair and/or replacement of parts or components, when effected by WEG and/or any WEG Authorized Repair Shop, will not give warranty extension.

This constitutes WEG´s only warranty in connection with this sale and the company will have no obligation or liability whatsoever to people, third parties, other equipment or installations, including without limitation, any claims for consequential damages or labor costs.

Section 3.2.5

MBBR Inlet Flowmeter

Configuration summary

Mat. no.	Description Order code	Quantity	Unit
71262984	Promag P 500, 5P5B25, DN25 1" 5P5B25-CDDBAAAAFBLL2DEA1K0AA1+PC	1	ST

010	Approval; Transmitter; Sensor:	CD	CSA C/US; Cl.I,II,III Div.1, XP; Cl.I Cl.II,III Div.1, Gr.A-G
015	Power Supply:	D	24VDC
020	Output; Input 1:	BA	4-20mA HART
021	Output; Input 2:	A	W/o;
022	Output; Input 3:	A	W/o;
023	Output; Input 4:	A	W/o;
030	Display; Operation:	F	4-line illum.; touch control
035	Integrated ISEM Electronic:	B	Transmitter
041	Transmitter Housing:	L	Cast, stainless
042	Sensor Junction Housing:	L	Cast, stainless
045	Cable, Sensor Connection:	2	10m/30ft coil and signal cable
050	Electrical Connection:	D	Thread NPT1/2
060	Liner:	E	PTFE
070	Process Connection:	A1K	Cl.150, carbon steel, flange ASME B16.5
075	Electrodes:	0	1.4435/316L
080	Calibration Flow:	A	0.5%
480	Device Model:	A1	1
620	>>Accessory Enclosed:	PC	Pipe mounting kit

TI01226D/06/EN/08.20
71491364
2020-08-14

Technical Information
Proline Promag P 500

Electromagnetic flowmeter



High-temperature flowmeter for process applications, as remote version with up to 4 I/Os

Application

- The bidirectional measuring principle is virtually independent of pressure, density, temperature and viscosity
- Dedicated to chemical and process applications with corrosive liquids and high medium temperatures

Device properties

- Nominal diameter: max. DN 600 (24")
- All common Ex approvals
- Liner made of PTFE or PFA
- Remote version with up to 4 I/Os
- Backlit display with touch control and WLAN access
- Standard cable between sensor and transmitter

Your benefits

- Versatile applications – wide variety of wetted materials
- Energy-saving flow measurement – no pressure loss due to cross-section constriction
- Maintenance-free – no moving parts
- Full access to process and diagnostic information – numerous, freely combinable I/Os and fieldbuses
- Reduced complexity and variety – freely configurable I/O functionality
- Integrated verification – Heartbeat Technology

Endress+Hauser
People for Process Automation

Table of contents

About this document 4
Symbols 4

Function and system design 5
Measuring principle 5
Measuring system 6
Equipment architecture 7
Safety 8

Input 10
Measured variable 10
Measuring range 10
Operable flow range 11
Input signal 11

Output 13
Output and input variants 13
Output signal 15
Signal on alarm 19
Load 21
Ex connection data 22
Low flow cut off 23
Galvanic isolation 23
Protocol-specific data 24

Power supply 29
Terminal assignment 29
Device plugs available 30
Pin assignment, device plug 31
Supply voltage 32
Power consumption 32
Current consumption 32
Power supply failure 32
Electrical connection 33
Potential equalization 44
Terminals 46
Cable entries 46
Cable specification 46

Performance characteristics 50
Reference operating conditions 50
Maximum measured error 50
Repeatability 51
Influence of ambient temperature 51

Installation 52
Mounting location 52
Orientation 53
Inlet and outlet runs 54
Adapters 54
Length of connecting cable 55
Mounting the transmitter housing 56
Special mounting instructions 58

Environment 58
Ambient temperature range 58
Storage temperature 59
Degree of protection 59
Vibration- and shock-resistance 59
Mechanical load 59
Electromagnetic compatibility (EMC) 59

Process 60
Medium temperature range 60
Conductivity 61
Pressure-temperature ratings 61
Pressure tightness 63
Flow limit 64
Pressure loss 64
System pressure 64
Thermal insulation 64
Vibrations 65
Magnetism and static electricity 65

Mechanical construction 65
Dimensions in SI units 65
Dimensions in US units 76
Weight 83
Measuring tube specification 84
Materials 85
Fitted electrodes 88
Process connections 88
Surface roughness 88

Human interface 88
Operating concept 88
Languages 88
Local operation 89
Remote operation 89
Service interface 95
Network integration 97
Supported operating tools 97
HistoROM data management 98

Certificates and approvals 100
CE mark 100
RCM-tick symbol 100
Ex approval 100
Pharmaceutical compatibility 102
Functional safety 102
HART certification 102
FOUNDATION Fieldbus certification 103
Certification PROFIBUS 103
EtherNet/IP certification 103
Certification PROFINET 103
Radio approval 103
Pressure Equipment Directive 103
Measuring instrument approval 103
Additional certification 103
Other standards and guidelines 104

Ordering information 104

Application packages 104
Diagnostics functions 105
Heartbeat Technology 105
Cleaning 105
OPC-UA server 105

Accessories 105
Device-specific accessories 106
Communication-specific accessories 107
Service-specific accessories 108
System components 108

Supplementary documentation 109
Standard documentation 109
Device-dependent additional documentation 109

Registered trademarks 110

About this document

Symbols

Electrical symbols

Symbol	Meaning
	Direct current
	Alternating current
	Direct current and alternating current
	**Ground connection** A grounded terminal which, as far as the operator is concerned, is grounded via a grounding system.
	**Protective Earth (PE)** A terminal which must be connected to ground prior to establishing any other connections. The ground terminals are situated inside and outside the device: ▪ Inner ground terminal: Connects the protectiv earth to the mains supply. ▪ Outer ground terminal: Connects the device to the plant grounding system.

Communication symbols

Symbol	Meaning
	**Wireless Local Area Network (WLAN)** Communication via a wireless, local network.
	**LED** Light emitting diode is off.
	**LED** Light emitting diode is on.
	**LED** Light emitting diode is flashing.

Symbols for certain types of information

Symbol	Meaning
	**Permitted** Procedures, processes or actions that are permitted.
	**Preferred** Procedures, processes or actions that are preferred.
	**Forbidden** Procedures, processes or actions that are forbidden.
	**Tip** Indicates additional information.
	Reference to documentation.
	Reference to page.
	Reference to graphic.
	Visual inspection.

Symbols in graphics

Symbol	Meaning
1, 2, 3, ...	Item numbers
1., 2., 3., ...	Series of steps
A, B, C, ...	Views
A-A, B-B, C-C, ...	Sections
	Hazardous area
	Safe area (non-hazardous area)
	Flow direction

Function and system design

Measuring principle

Following *Faraday's law of magnetic induction*, a voltage is induced in a conductor moving through a magnetic field.

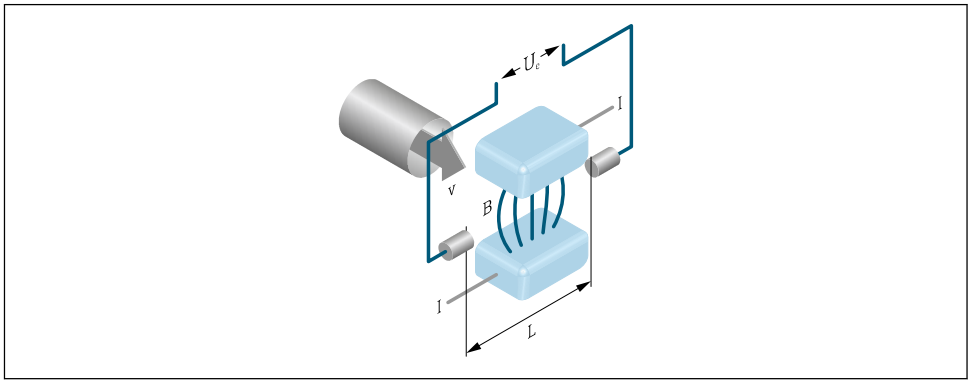

A0028962

Ue Induced voltage
B Magnetic induction (magnetic field)
L Electrode spacing
I Current
v Flow velocity

In the electromagnetic measuring principle, the flowing medium is the moving conductor. The voltage induced (U_e) is proportional to the flow velocity (v) and is supplied to the amplifier by means of two measuring electrodes. The flow volume (Q) is calculated via the pipe cross-section (A). The DC magnetic field is created through a switched direct current of alternating polarity.

Formulae for calculation

- Induced voltage $U_e = B \cdot L \cdot v$
- Volume flow $Q = A \cdot v$

Measuring system

The measuring system consists of a transmitter and a sensor. The transmitter and sensor are mounted in physically separate locations. They are interconnected by connecting cables.

Transmitter

Two versions of the transmitter are available.

Proline 500 – digital	Proline 500
For use in applications not required to meet special requirements due to ambient or operating conditions.	For use in applications required to meet special requirements due to ambient or operating conditions.
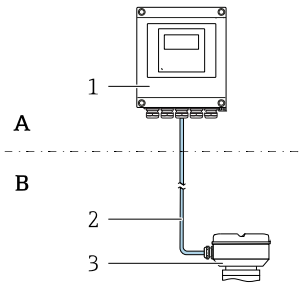 *A Non-hazardous area or Zone 2; Class I, Division 2* *B Non-hazardous area or Zone 2; Class I, Division 2 or Zone 1; Class I, Division 1* *1 Transmitter* *2 Connecting cable: cable, separate, standard* *3 Sensor connection housing with integrated ISEM*	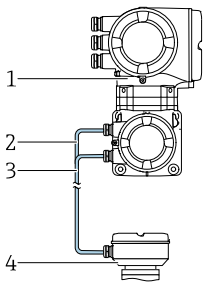 *Non-hazardous area or Zone 2; Class I, Division 2 or Zone 1; Class I, Division 1* *1 Transmitter with integrated ISEM* *2 Coil current cable* *3 Signal cable* *4 Sensor connection housing*
▪ Flexible and cost-effective separate installation. ▪ A standard cable can be used as the connecting cable.	Application examples for sensors without electronics: Strong vibrations at the sensor.
▪ Electronics in the transmitter housing, ISEM (intelligent sensor electronics module) in the sensor connection housing ▪ Signal transmission: digital Order code for "Integrated ISEM electronics", option **A** "Sensor"	▪ Electronics and ISEM (intelligent sensor electronics module) in the transmitter housing ▪ Signal transmission: analog Order code for "Integrated ISEM electronics", option **B** "Transmitter"
Connecting cable (can be ordered in various lengths)→ 🖹 106	
▪ Length: max. 300 m (1 000 ft) ▪ Standard cable with common shield (pair-stranded) ▪ Not sensitive to external EMC interference.	▪ Length: max. 200 m (656 ft), depending on medium conductivity ▪ Two connecting cables: ▪ One cable for coil current with a common shield (1 pair) ▪ One cable for signal transmission with a common shield and individual shielded cores (2 pairs)
Hazardous area	
Use in: Zone 2; Class I, Division 2 Mixed installation is possible: ▪ Sensor: Zone 1; Class I, Division 1 ▪ Transmitter: Zone 2; Class I, Division 2	Use in: Zone 1; Class I, Division 1 or Zone 2; Class I, Division 2
Housing versions and materials	
▪ Transmitter housing ▪ Aluminum, coated: aluminum, AlSi10Mg, coated ▪ Material: polycarbonate ▪ Material of window in transmitter housing ▪ Aluminum, coated: glass ▪ Polycarbonate: plastic	▪ Transmitter housing ▪ Aluminum, coated: aluminum, AlSi10Mg, coated ▪ Cast, stainless: cast, stainless steel, 1.4409 (CF3M) similar to 316L ▪ Window material: glass
Configuration	
▪ External operation via 4-line, backlit, graphic local display with touch control and guided menus ("Make-it-run" wizards) for application-specific commissioning. ▪ Via service interface or WLAN interface: ▪ Operating tools (e.g. FieldCare, DeviceCare) ▪ Web server (access via Web browser, e.g. Microsoft Internet Explorer, Microsoft Edge)	

Sensor connection housing

Different versions of the connection housing are available.

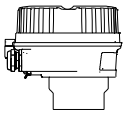	Order code for "Sensor connection housing", option A, "Aluminum, coated": Aluminum, AlSi10Mg, coated
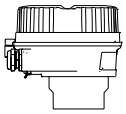	Order code for "Sensor connection housing", option L, "Cast, stainless": 1.4409 (CF3M) similar to 316L

Sensor

Promag P
 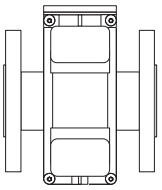
A0017703
	Nominal diameter range: DN 15 to 600 (½ to 24")
	Materials:
	▪ Sensor housing:
	  ▪ Aluminum, AlSi10Mg, coated
	  ▪ DN 15 to 300 (½ to 12"): aluminum, AlSi10Mg, coated
	  ▪ DN 350 to 600 (14 to 24"): carbon steel with protective varnish
	▪ Measuring tubes [1]: stainless steel, 1.4301/1.4306
	▪ Liner: PFA, PTFE
	▪ Electrodes: stainless steel, 1.4435 (F316L); Alloy C22, 2.4602 (UNS N06022); platinum; tantalum; titanium
	▪ Process connections: stainless steel, 1.4571/F316L; carbon steel, A105/FE410WB/HII/S235JRG2/S275JR
	▪ Seals: as per DIN EN 1514-1
	▪ Ground disks: stainless steel, 1.4435 (316L); Alloy C22, 2.4602 (UNS N06022); tantalum; titanium

1) For flanges made of carbon steel with Al/Zn protective coating (DN 15 to 300 (½ to 12")) or protective varnish (DN 350 to 600 (14 to 24"))

Equipment architecture

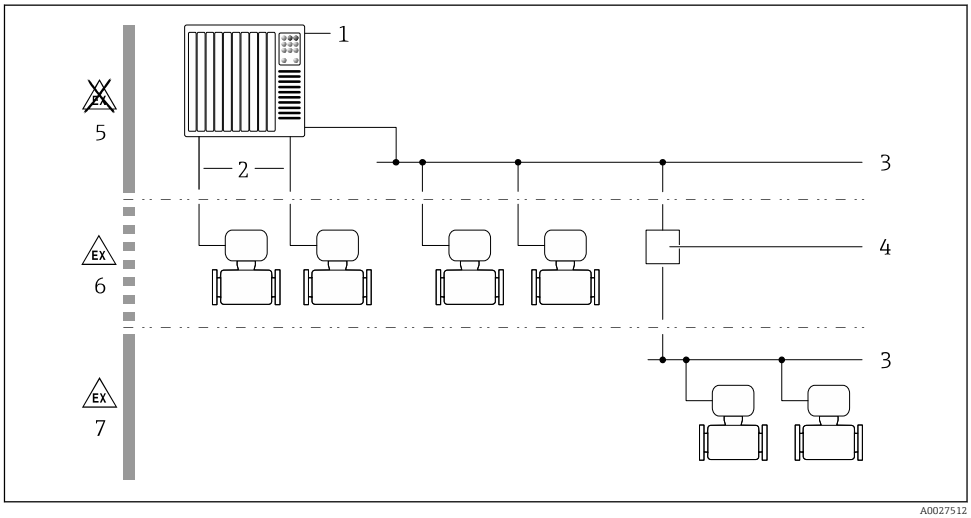

A0027512

1 Possibilities for integrating measuring devices into a system

1 Control system (e.g. PLC)
2 Connecting cable (0/4 to 20 mA HART etc.)
3 Fieldbus
4 Coupler
5 Non-hazardous area
6 Hazardous area: Zone 2; Class I, Division 2
7 Hazardous area: Zone 1; Class I, Division 1

Safety

IT security

Our warranty is valid only if the device is installed and used as described in the Operating Instructions. The device is equipped with security mechanisms to protect it against any inadvertent changes to the settings.

IT security measures, which provide additional protection for the device and associated data transfer, must be implemented by the operators themselves in line with their security standards.

Device-specific IT security

The device offers a range of specific functions to support protective measures on the operator's side. These functions can be configured by the user and guarantee greater in-operation safety if used correctly. An overview of the most important functions is provided in the following section.

Function/interface	Factory setting	Recommendation
Write protection via hardware write protection switch → 🖹 8	Not enabled.	On an individual basis following risk assessment.
Access code (also applies for Web server login or FieldCare connection) → 🖹 8	Not enabled (0000).	Assign a customized access code during commissioning.
WLAN (order option in display module)	Enabled.	On an individual basis following risk assessment.
WLAN security mode	Enabled (WPA2-PSK)	Do not change.
WLAN passphrase (password) → 🖹 9	Serial number	Assign an individual WLAN passphrase during commissioning.
WLAN mode	Access Point	On an individual basis following risk assessment.
Web server→ 🖹 9	Enabled.	On an individual basis following risk assessment.
CDI-RJ45 service interface → 🖹 9	–	On an individual basis following risk assessment.

Protecting access via hardware write protection

Write access to the device parameters via the local display, Web browser or operating tool (e.g. FieldCare, DeviceCare) can be disabled via a write protection switch (DIP switch on the motherboard). When hardware write protection is enabled, only read access to the parameters is possible.

Hardware write protection is disabled when the device is delivered.

Protecting access via a password

Different passwords are available to protect write access to the device parameters or access to the device via the WLAN interface.

- User-specific access code
  Protect write access to the device parameters via the local display, Web browser or operating tool (e.g. FieldCare, DeviceCare). Access authorization is clearly regulated through the use of a user-specific access code.
- WLAN passphrase
  The network key protects a connection between an operating unit (e.g. notebook or tablet) and the device via the WLAN interface which can be ordered as an option.
- Infrastructure mode
  When the device is operated in infrastructure mode, the WLAN passphrase corresponds to the WLAN passphrase configured on the operator side.

User-specific access code

Write access to the device parameters via the local display, Web browser or operating tool (e.g. FieldCare, DeviceCare) can be protected by the modifiable, user-specific access code.

WLAN passphrase: Operation as WLAN access point

A connection between an operating unit (e.g. notebook or tablet) and the device via the WLAN interface, which can be ordered as an optional extra, is protected by the network key. The WLAN authentication of the network key complies with the IEEE 802.11 standard.

When the device is delivered, the network key is pre-defined depending on the device. It can be changed via the **WLAN settings** submenu in the **WLAN passphrase** parameter.

Infrastructure mode

A connection between the device and WLAN access point is protected by means of an SSID and passphrase on the system side. Please contact the relevant system administrator for access.

General notes on the use of passwords

- The access code and network key supplied with the device should be changed during commissioning.
- Follow the general rules for generating a secure password when defining and managing the access code or network key.
- The user is responsible for the management and careful handling of the access code and network key.

Access via Web server

The device can be operated and configured via a Web browser with the integrated Web server. The connection is via the service interface (CDI-RJ45) or the WLAN interface. For device versions with the EtherNet/IP and PROFINET communication protocols, the connection can also be established via the terminal connection for signal transmission with EtherNet/IP or PROFINET (RJ45 connector).

The Web server is enabled when the device is delivered. The Web server can be disabled if necessary (e.g. after commissioning) via the **Web server functionality** parameter.

The device and status information can be hidden on the login page. This prevents unauthorized access to the information.

For detailed information on device parameters, see:
The "Description of Device Parameters" document → 109

Access via OPC-UA

The "OPC UA Server" application package is available in the device version with the HART communication protocol → 105.

The device can communicate with OPC UA clients using the "OPC UA Server" application package.

The OPC UA server integrated in the device can be accessed via the WLAN access point using the WLAN interface - which can be ordered as an optional extra - or the service interface (CDI- RJ45) via Ethernet network. Access rights and authorization as per separate configuration.

The following Security Modes are supported as per the OPC UA Specification (IEC 62541):
- None
- Basic128Rsa15 – signed
- Basic128Rsa15 – signed and encrypted

Access via service interface (CDI-RJ45)

The device can be connected to a network via the service interface (CDI-RJ45). Device-specific functions guarantee the secure operation of the device in a network.

The use of relevant industrial standards and guidelines that have been defined by national and international safety committees, such as IEC/ISA62443 or the IEEE, is recommended. This includes organizational security measures such as the assignment of access authorization as well as technical measures such as network segmentation.

Transmitters with an Ex de approval may not be connected via the service interface (CDI-RJ45)!

Order code for "Approval transmitter + sensor", options (Ex de): BA, BB, C1, C2, GA, GB, MA, MB, NA, NB

The device can be integrated in a ring topology. The device is integrated via the terminal connection for signal transmission (output 1) and the connection to the service interface (CDI-RJ45) .

Input

Measured variable

Direct measured variables

- Volume flow (proportional to induced voltage)
- Electrical conductivity

Calculated measured variables

- Mass flow
- Corrected volume flow

Measuring range

Typically v = 0.01 to 10 m/s (0.03 to 33 ft/s) with the specified accuracy

Flow characteristic values in SI units: DN 15 to 125 (½ to 4")

Nominal diameter		Recommended flow	Factory settings		
		min./max. full scale value (v ~ 0.3/10 m/s)	Full scale value current output (v ~ 2.5 m/s)	Pulse value (~ 2 pulse/s)	Low flow cut off (v ~ 0.04 m/s)
[mm]	[in]	[dm³/min]	[dm³/min]	[dm³]	[dm³/min]
15	½	4 to 100	25	0.2	0.5
25	1	9 to 300	75	0.5	1
32	–	15 to 500	125	1	2
40	1 ½	25 to 700	200	1.5	3
50	2	35 to 1 100	300	2.5	5
65	–	60 to 2 000	500	5	8
80	3	90 to 3 000	750	5	12
100	4	145 to 4 700	1200	10	20
125	–	220 to 7 500	1850	15	30

Flow characteristic values in SI units: DN 150 to 600 (6 to 24")

Nominal diameter		Recommended flow	Factory settings		
		min./max. full scale value (v ~ 0.3/10 m/s)	Full scale value current output (v ~ 2.5 m/s)	Pulse value (~ 2 pulse/s)	Low flow cut off (v ~ 0.04 m/s)
[mm]	[in]	[m³/h]	[m³/h]	[m³]	[m³/h]
150	6	20 to 600	150	0.03	2.5
200	8	35 to 1 100	300	0.05	5
250	10	55 to 1 700	500	0.05	7.5
300	12	80 to 2 400	750	0.1	10
350	14	110 to 3 300	1 000	0.1	15
400	16	140 to 4 200	1 200	0.15	20
450	18	180 to 5 400	1 500	0.25	25
500	20	220 to 6 600	2 000	0.25	30
600	24	310 to 9 600	2 500	0.3	40

Flow characteristic values in US units: ½ - 24" (DN 15 - 600)

Nominal diameter		Recommended flow	Factory settings		
		min./max. full scale value (v ~ 0.3/10 m/s)	Full scale value current output (v ~ 2.5 m/s)	Pulse value (~ 2 pulse/s)	Low flow cut off (v ~ 0.04 m/s)
[in]	[mm]	[gal/min]	[gal/min]	[gal]	[gal/min]
½	15	1.0 to 27	6	0.1	0.15
1	25	2.5 to 80	18	0.2	0.25
1 ½	40	7 to 190	50	0.5	0.75
2	50	10 to 300	75	0.5	1.25
3	80	24 to 800	200	2	2.5
4	100	40 to 1250	300	2	4
6	150	90 to 2650	600	5	12
8	200	155 to 4850	1200	10	15
10	250	250 to 7500	1500	15	30
12	300	350 to 10600	2400	25	45
14	350	500 to 15000	3600	30	60
16	400	600 to 19000	4800	50	60
18	450	800 to 24000	6000	50	90
20	500	1000 to 30000	7500	75	120
24	600	1400 to 44000	10500	100	180

Recommended measuring range

Flow limit → 64

Operable flow range

Over 1000 : 1

Input signal

Input and output versions

→ 13

External measured values

To increase the accuracy of certain measured variables or to calculate the mass flow, the automation system can continuously write different measured values to the measuring device:
- Medium temperature enables temperature-compensated conductivity measurement (e.g. iTEMP)
- Reference density for calculating the mass flow

Various pressure transmitters and temperature measuring devices can be ordered from Endress +Hauser: see "Accessories" section → 108

It is recommended to read in external measured values to calculate the corrected volume flow.

HART protocol

The measured values are written from the automation system to the measuring device via the HART protocol. The pressure transmitter must support the following protocol-specific functions:
- HART protocol
- Burst mode

Current input

The measured values are written from the automation system to the measuring device via the current input → 12.

Digital communication

The measured values can be written from the automation system to the measuring via:
- FOUNDATION Fieldbus
- PROFIBUS DP
- PROFIBUS PA
- Modbus RS485
- EtherNet/IP
- PROFINET

Current input 0/4 to 20 mA

Current input	0/4 to 20 mA (active/passive)
Current span	▪ 4 to 20 mA (active) ▪ 0/4 to 20 mA (passive)
Resolution	1 µA
Voltage drop	Typically: 0.6 to 2 V for 3.6 to 22 mA (passive)
Maximum input voltage	≤ 30 V (passive)
Open-circuit voltage	≤ 28.8 V (active)
Possible input variables	▪ Temperature ▪ Density

Status input

Maximum input values	▪ DC −3 to 30 V ▪ If status input is active (ON): R_i >3 kΩ
Response time	Configurable: 5 to 200 ms
Input signal level	▪ Low signal: DC −3 to +5 V ▪ High signal: DC 12 to 30 V
Assignable functions	▪ Off ▪ Reset the individual totalizers separately ▪ Reset all totalizers ▪ Flow override

Output

Output and input variants

Depending on the option selected for output/input 1, different options are available for the other outputs and inputs. Only one option can be selected for each output/input 1 to 4. The following tables must be read vertically (↓).

Example: If the option BA "4–20 mA HART" was selected for output/input 1, one of the options A, B, D, E, F, H, I or J is available for output 2 and one of the options A, B, D, E, F, H, I or J is available for output 3 and 4.

Output/input 1 and options for output/input 2

Options for output/input 3 and 4

Order code for "Output; input 1" (020) →	Possible options										
Current output 4 to 20 mA HART	**BA**										
Current output 4 to 20 mA HART Ex i passive	↓	**CA**									
Current output 4 to 20 mA HART Ex i active		↓	**CC**								
FOUNDATION Fieldbus			↓	**SA**							
FOUNDATION Fieldbus Ex i				↓	**TA**						
PROFIBUS DP					↓	**LA**					
PROFIBUS PA						↓	**GA**				
PROFIBUS PA Ex i							↓	**HA**			
Modbus RS485								↓	**MA**		
EtherNet/IP 2-port switch integrated									↓	**NA**	
PROFINET 2-port switch integrated										↓	**RA**
Order code for "Output; input 2" (021) →	↓	↓	↓	↓	↓	↓	↓	↓	↓	↓	↓
Not assigned	**A**	**A**	**A**	**A**	**A**	**A**	**A**	**A**	**A**	**A**	**A**
Current output 4 to 20 mA	**B**			**B**		**B**	**B**		**B**	**B**	**B**
Current output 4 to 20 mA Ex i passive		**C**	**C**		**C**			**C**			
User-configurable input/output [1]	**D**			**D**		**D**	**D**		**D**	**D**	**D**
Pulse/frequency/switch output	**E**			**E**		**E**	**E**		**E**	**E**	**E**
Double pulse output [2]	**F**								**F**		
Pulse/frequency/switch output Ex i passive		**G**	**G**		**G**			**G**			
Relay output	**H**			**H**		**H**	**H**		**H**	**H**	**H**
Current input 0/4 to 20 mA	**I**			**I**		**I**	**I**		**I**	**I**	**I**
Status input	**J**			**J**		**J**	**J**		**J**	**J**	**J**

1) A specific input or output can be assigned to a user-configurable input/output → 19.
2) If double pulse output (F) is selected for output/input 2 (021), only the double pulse output (F) option is available for selection for output/input 3 (022).

Output/input 1 and options for output/input 3 and 4

Options for output/input 2 → 13

Order code for "Output; input 1" (020) →	Possible options										
Current output 4 to 20 mA HART	**BA**										
Current output 4 to 20 mA HART Ex i passive	↓	**CA**									
Current output 4 to 20 mA HART Ex i active		↓	**CC**								
FOUNDATION Fieldbus			↓	**SA**							
FOUNDATION Fieldbus Ex i				↓	**TA**						
PROFIBUS DP					↓	**LA**					
PROFIBUS PA						↓	**GA**				
PROFIBUS PA Ex i							↓	**HA**			
Modbus RS485								↓	**MA**		
EtherNet/IP 2-port switch integrated									↓	**NA**	
PROFINET 2-port switch integrated										↓	**RA**
Order code for "Output; input 3" (022), "Output; input 4" (023) →	↓	↓	↓	↓	↓	↓	↓	↓	↓	↓	↓
Not assigned	**A**	**A**	**A**	**A**	**A**	**A**	**A**	**A**	**A**	**A**	**A**
Current output 4 to 20 mA	**B**					**B**			**B**	**B**	**B**
Current output 4 to 20 mA Ex i passive [1]		**C**	**C**								
User-configurable input/output	**D**					**D**			**D**	**D**	**D**
Pulse/frequency/switch output	**E**					**E**			**E**	**E**	**E**
Double pulse output (slave) [2]	**F**								**F**		
Pulse/frequency/switch output Ex i passive [3]		**G**	**G**								
Relay output	**H**					**H**			**H**	**H**	**H**
Current input 0/4 to 20 mA	**I**					**I**			**I**	**I**	**I**
Status input	**J**					**J**			**J**	**J**	**J**

1) For output/input 4 the current output 4 to 20 mA Ex i passive (C) is not available.
2) The double pulse output (F) option is not available for input/output 4.
3) For output/input 4 the pulse/frequency/switch output Ex i passive (G) is not available.

Output signal

Current output 4 to 20 mA HART

Order code	"Output; input 1" (20): Option BA: current output 4 to 20 mA HART
Signal mode	Can be set to: ▪ Active ▪ Passive
Current range	Can be set to: ▪ 4 to 20 mA NAMUR ▪ 4 to 20 mA US ▪ 4 to 20 mA ▪ 0 to 20 mA (only if the signal mode is active) ▪ Fixed current
Open-circuit voltage	DC 28.8 V (active)
Maximum input voltage	DC 30 V (passive)
Load	250 to 700 Ω
Resolution	0.38 µA
Damping	Configurable: 0 to 999.9 s
Assignable measured variables	▪ Volume flow ▪ Mass flow ▪ Corrected volume flow ▪ Flow velocity ▪ Conductivity ▪ Electronics temperature

Current output 4 to 20 mA HART Ex i

Order code	"Output; input 1" (20) choose from: ▪ Option CA: current output 4 to 20 mA HART Ex i passive ▪ Option CC: current output 4 to 20 mA HART Ex i active
Signal mode	Depends on the selected order version.
Current range	Can be set to: ▪ 4 to 20 mA NAMUR ▪ 4 to 20 mA US ▪ 4 to 20 mA ▪ 0 to 20 mA (only if the signal mode is active) ▪ Fixed current
Open-circuit voltage	DC 21.8 V (active)
Maximum input voltage	DC 30 V (passive)
Load	▪ 250 to 400 Ω (active) ▪ 250 to 700 Ω (passive)
Resolution	0.38 µA
Damping	Configurable: 0 to 999.9 s
Assignable measured variables	▪ Volume flow ▪ Mass flow ▪ Corrected volume flow ▪ Flow velocity ▪ Conductivity ▪ Electronics temperature

FOUNDATION Fieldbus

FOUNDATION Fieldbus	H1, IEC 61158-2, galvanically isolated
Data transfer	31.25 kbit/s

Current consumption	10 mA
Permitted supply voltage	9 to 32 V
Bus connection	With integrated reverse polarity protection

PROFIBUS DP

Signal encoding	NRZ code
Data transfer	9.6 kBaud...12 MBaud

PROFIBUS PA

PROFIBUS PA	In accordance with EN 50170 Volume 2, IEC 61158-2 (MBP), galvanically isolated
Data transmission	31.25 kbit/s
Current consumption	10 mA
Permitted supply voltage	9 to 32 V
Bus connection	With integrated reverse polarity protection

Modbus RS485

Physical interface	RS485 in accordance with EIA/TIA-485 standard
Terminating resistor	Integrated, can be activated via DIP switches

EtherNet/IP

Standards	In accordance with IEEE 802.3

PROFINET

Standards	In accordance with IEEE 802.3

Current output 4 to 20 mA

Order code	"Output; input 2" (21), "Output; input 3" (022) or "Output; input 4" (023): Option B: current output 4 to 20 mA
Signal mode	Can be set to: ▪ Active ▪ Passive
Current span	Can be set to: ▪ 4 to 20 mA NAMUR ▪ 4 to 20 mA US ▪ 4 to 20 mA ▪ 0 to 20 mA (only if the signal mode is active) ▪ Fixed current
Maximum output values	22.5 mA
Open-circuit voltage	DC 28.8 V (active)
Maximum input voltage	DC 30 V (passive)
Load	0 to 700 Ω
Resolution	0.38 µA

Damping	Configurable: 0 to 999.9 s
Assignable measured variables	▪ Volume flow ▪ Mass flow ▪ Corrected volume flow ▪ Flow velocity ▪ Conductivity ▪ Electronics temperature

Current output 4 to 20 mA Ex i passive

Order code	"Output; input 2" (21), "Output; input 3" (022): Option C: current output 4 to 20 mA Ex i passive
Signal mode	Passive
Current span	Can be set to: ▪ 4 to 20 mA NAMUR ▪ 4 to 20 mA US ▪ 4 to 20 mA ▪ Fixed current
Maximum output values	22.5 mA
Maximum input voltage	DC 30 V
Load	0 to 700 Ω
Resolution	0.38 µA
Damping	Configurable: 0 to 999 s
Assignable measured variables	▪ Volume flow ▪ Mass flow ▪ Corrected volume flow ▪ Flow velocity ▪ Conductivity ▪ Electronics temperature

Pulse/frequency/switch output

Function	Can be set to pulse, frequency or switch output
Version	Open collector Can be set to: ▪ Active ▪ Passive ▪ Passive NAMUR Ex-i, passive
Maximum input values	DC 30 V, 250 mA (passive)
Open-circuit voltage	DC 28.8 V (active)
Voltage drop	For 22.5 mA: ≤ DC 2 V
Pulse output	
Maximum input values	DC 30 V, 250 mA (passive)
Maximum output current	22.5 mA (active)
Open-circuit voltage	DC 28.8 V (active)
Pulse width	Configurable: 0.05 to 2 000 ms
Maximum pulse rate	10 000 Impulse/s
Pulse value	Adjustable
Assignable measured variables	▪ Volume flow ▪ Mass flow ▪ Corrected volume flow

Frequency output	
Maximum input values	DC 30 V, 250 mA (passive)
Maximum output current	22.5 mA (active)
Open-circuit voltage	DC 28.8 V (active)
Output frequency	Adjustable: end value frequency 2 to 10 000 Hz (f_{max} = 12 500 Hz)
Damping	Configurable: 0 to 999.9 s
Pulse/pause ratio	1:1
Assignable measured variables	▪ Volume flow ▪ Mass flow ▪ Corrected volume flow ▪ Flow velocity ▪ Conductivity ▪ Electronics temperature
Switch output	
Maximum input values	DC 30 V, 250 mA (passive)
Open-circuit voltage	DC 28.8 V (active)
Switching behavior	Binary, conductive or non-conductive
Switching delay	Configurable: 0 to 100 s
Number of switching cycles	Unlimited

Assignable functions	▪ Off
	▪ On
	▪ Diagnostic behavior
	▪ Limit value:
	  ▪ Off
	  ▪ Volume flow
	  ▪ Mass flow
	  ▪ Corrected volume flow
	  ▪ Flow velocity
	  ▪ Conductivity
	  ▪ Totalizer 1-3
	  ▪ Electronics temperature
	▪ Flow direction monitoring
	▪ Status
	  ▪ Empty pipe detection
	  ▪ Low flow cut off

Double pulse output

Function	Double pulse
Version	Open collector Can be set to: ▪ Active ▪ Passive ▪ Passive NAMUR
Maximum input values	DC 30 V, 250 mA (passive)
Open-circuit voltage	DC 28.8 V (active)
Voltage drop	For 22.5 mA: ≤ DC 2 V
Output frequency	Configurable: 0 to 1 000 Hz
Damping	Configurable: 0 to 999 s

Pulse/pause ratio	1:1
Assignable measured variables	▪ Volume flow ▪ Mass flow ▪ Corrected volume flow ▪ Flow velocity ▪ Conductivity ▪ Electronics temperature

Relay output

Function	Switch output
Version	Relay output, galvanically isolated
Switching behavior	Can be set to: ▪ NO (normally open), factory setting ▪ NC (normally closed)
Maximum switching capacity (passive)	▪ DC 30 V, 0.1 A ▪ AC 30 V, 0.5 A

Assignable functions	▪ Off
	▪ On
	▪ Diagnostic behavior
	▪ Limit value:
	  ▪ Off
	  ▪ Volume flow
	  ▪ Mass flow
	  ▪ Corrected volume flow
	  ▪ Flow velocity
	  ▪ Conductivity
	  ▪ Totalizer 1-3
	  ▪ Electronics temperature
	▪ Flow direction monitoring
	▪ Status
	  ▪ Empty pipe detection
	  ▪ Low flow cut off

User-configurable input/output

One specific input or output is assigned to a user-configurable input/output (configurable I/O) during device commissioning.

The following inputs and outputs are available for assignment:
- Choice of current output: 4 to 20 mA (active), 0/4 to 20 mA (passive)
- Pulse/frequency/switch output
- Choice of current input: 4 to 20 mA (active), 0/4 to 20 mA (passive)
- Status input

The technical values correspond to those of the inputs and outputs described in this section.

Signal on alarm

Depending on the interface, failure information is displayed as follows:

HART current output

Device diagnostics	Device condition can be read out via HART Command 48

PROFIBUS PA

Status and alarm messages	Diagnostics in accordance with PROFIBUS PA Profile 3.02
Failure current FDE (Fault Disconnection Electronic)	0 mA

PROFIBUS DP

Status and alarm messages	Diagnostics in accordance with PROFIBUS PA Profile 3.02

EtherNet/IP

Device diagnostics	Device condition can be read out in Input Assembly

PROFINET

Device diagnostics	According to "Application Layer protocol for decentralized periphery", Version 2.3

FOUNDATION Fieldbus

Status and alarm messages	Diagnostics in accordance with FF-891
Failure current FDE (Fault Disconnection Electronic)	0 mA

Modbus RS485

Failure mode	Choose from: ▪ NaN value instead of current value ▪ Last valid value

Current output 0/4 to 20 mA

4 to 20 mA

Failure mode	Choose from: ▪ 4 to 20 mA in accordance with NAMUR recommendation NE 43 ▪ 4 to 20 mA in accordance with US ▪ Min. value: 3.59 mA ▪ Max. value: 22.5 mA ▪ Freely definable value between: 3.59 to 22.5 mA ▪ Actual value ▪ Last valid value

0 to 20 mA

Failure mode	Choose from: ▪ Maximum alarm: 22 mA ▪ Freely definable value between: 0 to 20.5 mA

Pulse/frequency/switch output

Pulse output	
Failure mode	Choose from: ▪ Actual value ▪ No pulses
Frequency output	
Failure mode	Choose from: ▪ Actual value ▪ 0 Hz ▪ Defined value (f_{max} 2 to 12 500 Hz)

Switch output	
Failure mode	Choose from: ▪ Current status ▪ Open ▪ Closed

Relay output

Failure mode	Choose from: ▪ Current status ▪ Open ▪ Closed

Local display

Plain text display	With information on cause and remedial measures
Backlight	Red backlighting indicates a device error.

Status signal as per NAMUR recommendation NE 107

Interface/protocol

- Via digital communication:
  - HART protocol
  - FOUNDATION Fieldbus
  - PROFIBUS PA
  - PROFIBUS DP
  - Modbus RS485
  - EtherNet/IP
  - PROFINET
- Via service interface
  - CDI-RJ45 service interface
  - WLAN interface

Plain text display	With information on cause and remedial measures

Additional information on remote operation → 89

Web browser

Plain text display	With information on cause and remedial measures

Light emitting diodes (LED)

Status information	Status indicated by various light emitting diodes The following information is displayed depending on the device version: ▪ Supply voltage active ▪ Data transmission active ▪ Device alarm/error has occurred ▪ EtherNet/IP network available ▪ EtherNet/IP connection established ▪ PROFINET network available ▪ PROFINET connection established ▪ PROFINET blinking feature

Load	Output signal → 15

Ex connection data

Safety-related values

Order code for "Output; input 1"	Output type	Safety-related values "Output; input 1"	
		26 (+)	27 (–)
Option **BA**	Current output 4 to 20 mA HART	U_N = 30 V_{DC} U_M = 250 V_{AC}	
Option **GA**	PROFIBUS PA	U_N = 30 V_{DC} U_M = 250 V_{AC}	
Option **LA**	PROFIBUS DP	U_N = 30 V_{DC} U_M = 250 V_{AC}	
Option **MA**	Modbus RS485	U_N = 30 V_{DC} U_M = 250 V_{AC}	
Option **SA**	FOUNDATION Fieldbus	U_N = 30 V_{DC} U_M = 250 V_{AC}	
Option **NA**	EtherNet/IP	U_N = 30 V_{DC} U_M = 250 V_{AC}	
Option **RA**	PROFINET	U_N = 30 V_{DC} U_M = 250 V_{AC}	

Order code for "Output; input 2"; "Output; input 3" "Output; input 4"	Output type	Safety-related values					
		Output; input 2		Output; input 3		Output; input 4 [1]	
		24 (+)	25 (–)	22 (+)	23 (–)	20 (+)	21 (–)
Option **B**	Current output 4 to 20 mA	U_N = 30 V_{DC} U_M = 250 V_{AC}					
Option **D**	User-configurable input/ output	U_N = 30 V_{DC} U_M = 250 V_{AC}					
Option **E**	Pulse/frequency/switch output	U_N = 30 V_{DC} U_M = 250 V_{AC}					
Option **F**	Double pulse output	U_N = 30 V_{DC} U_M = 250 V_{AC}					
Option **H**	Relay output	U_N = 30 V_{DC} I_N =100 mA_{DC}/500 mA_{AC} U_M = 250 V_{AC}					
Option **I**	Current input 4 to 20 mA	U_N = 30 V_{DC} U_M = 250 V_{AC}					
Option **J**	Status input	U_N = 30 V_{DC} U_M = 250 V_{AC}					

1) The order code "Output; input 4" is only available for the Proline 500 – digital transmitter.

Intrinsically safe values

Order code for "Output; input 1"	Output type	Intrinsically safe values "Output; input 1"	
		26 (+)	27 (–)
Option **CA**	Current output 4 to 20 mA HART Ex i passive	U_i = 30 V I_i = 100 mA P_i = 1.25 W L_i = 0 µH C_i = 6 nF	
Option **CC**	Current output 4 to 20 mA HART Ex i active	**Ex ia** [1] U_0 = 21.8 V I_0 = 90 mA P_0 = 491 mW L_0 = 4.1 mH (IIC)/15 mH (IIB) C_0 = 160 nF (IIC)/ 1 160 nF (IIB) U_i = 30 V I_i = 10 mA P_i = 0.3 W L_i = 5 µH C_i = 6 nF	**Ex ic** [2] U_0 = 21.8 V I_0 = 90 mA P_0 = 491 mW L_0 = 9 mH (IIC)/39 mH (IIB) C_0 = 600 nF (IIC)/ 4 000 nF (IIB)
Option **HA**	PROFIBUS PA Ex i (FISCO Field Device)	**Ex ia** [3] U_i = 30 V I_i = 570 mA P_i = 8.5 W L_i = 10 µH C_i = 5 nF	**Ex ic** [4] U_i = 32 V I_i = 570 mA P_i = 8.5 W L_i = 10 µH C_i = 5 nF
Option **TA**	FOUNDATION Fieldbus Ex i	**Ex ia** [3] U_i = 30 V I_i = 570 mA P_i = 8.5 W L_i = 10 µH C_i = 5 nF	**Ex ic** [4] U_i = 32 V I_i = 570 mA P_i = 8.5 W L_i = 10 µH C_i = 5 nF

1) Only available for the Zone 1; Class I, Division 1 version
2) Only available for the Zone 2; Class I, Division 2 version and only for the Proline 500 – digital transmitter
3) Only available for the Zone 1; Class I, Division 1 version
4) Only available for the Zone 2; Class I, Division 2 version and only for the Proline 500 – digital transmitter

Order code for "Output; input 2"; "Output; input 3"; "Output; input 4"	Output type	Intrinsically safe values or NIFW values					
		Output; input 2		Output; input 3		Output; input 4 [1]	
		24 (+)	25 (–)	22 (+)	23 (–)	20 (+)	21 (–)
Option C	Current output 4 to 20 mA Ex i passive	U_i = 30 V I_i = 100 mA P_i = 1.25 W L_i = 0 C_i = 0					
Option G	Pulse/frequency/switch output Ex i passive	U_i = 30 V I_i = 100 mA P_i = 1.25 W L_i = 0 C_i = 0					

1) The order code "Output; input 4" is only available for the Proline 500 – digital transmitter.

Low flow cut off

The switch points for low flow cut off are user-selectable.

Galvanic isolation

The outputs are galvanically isolated from one another and from earth (PE).

Protocol-specific data

HART

Manufacturer ID	0x11
Device type ID	0x3C
HART protocol revision	7
Device description files (DTM, DD)	Information and files under: www.endress.com
HART load	Min. 250 Ω
System integration	Information on system integration: Operating Instructions → 📄 109. ▪ Measured variables via HART protocol ▪ Burst Mode functionality

FOUNDATION Fieldbus

Manufacturer ID	0x452B48 (hex)
Ident number	0x103C (hex)
Device revision	1
DD revision	Information and files under: ▪ www.endress.com ▪ www.fieldbus.org
CFF revision	
Interoperability Test Kit (ITK)	Version 6.2.0
ITK Test Campaign Number	Information: ▪ www.endress.com ▪ www.fieldbus.org
Link Master capability (LAS)	Yes
Choice of "Link Master" and "Basic Device"	Yes Factory setting: Basic Device
Node address	Factory setting: 247 (0xF7)
Supported functions	The following methods are supported: ▪ Restart ▪ ENP Restart ▪ Diagnostic ▪ Set to OOS ▪ Set to AUTO ▪ Read trend data ▪ Read event logbook
Virtual Communication Relationships (VCRs)	
Number of VCRs	44
Number of link objects in VFD	50
Permanent entries	1
Client VCRs	0
Server VCRs	10
Source VCRs	43
Sink VCRs	0
Subscriber VCRs	43
Publisher VCRs	43
Device Link Capabilities	
Slot time	4
Min. delay between PDU	8

Max. response delay	16
System integration	Information regarding system integration: Operating Instructions → 🖹 109. ▪ Cyclic data transmission ▪ Description of the modules ▪ Execution times ▪ Methods

PROFIBUS DP

Manufacturer ID	0x11
Ident number	0x1570
Profile version	3.02
Device description files (GSD, DTM, DD)	Information and files under: ▪ www.endress.com On the product page for the device: Documents/Software → Device drivers ▪ www.profibus.org
Supported functions	▪ Identification & Maintenance Simplest device identification on the part of the control system and nameplate ▪ PROFIBUS upload/download Reading and writing parameters is up to ten times faster with PROFIBUS upload/download ▪ Condensed status Simplest and self-explanatory diagnostic information by categorizing diagnostic messages that occur
Configuration of the device address	▪ DIP switches on the I/O electronics module ▪ Via operating tools (e.g. FieldCare)
Compatibility with earlier model	If the device is replaced, the measuring device Promag 500 supports the compatibility of the cyclic data with previous models. It is not necessary to adjust the engineering parameters of the PROFIBUS network with the Promag 500 GSD file. Earlier models: ▪ Promag 50 PROFIBUS DP ▪ ID No.: 1546 (hex) ▪ Extended GSD file: EH3x1546.gsd ▪ Standard GSD file: EH3_1546.gsd ▪ Promag 53 PROFIBUS DP ▪ ID No.: 1526 (hex) ▪ Extended GSD file: EH3x1526.gsd ▪ Standard GSD file: EH3_1526.gsd Description of the function scope of compatibility: Operating Instructions → 🖹 109.
System integration	Information regarding system integration: Operating Instructions → 🖹 109. ▪ Cyclic data transmission ▪ Block model ▪ Description of the modules

PROFIBUS PA

Manufacturer ID	0x11
Ident number	0x156C
Profile version	3.02
Device description files (GSD, DTM, DD)	Information and files under: ▪ www.endress.com ▪ www.profibus.org

Supported functions	▪ Identification & Maintenance Simplest device identification on the part of the control system and nameplate ▪ PROFIBUS upload/download Reading and writing parameters is up to ten times faster with PROFIBUS upload/download ▪ Condensed status Simplest and self-explanatory diagnostic information by categorizing diagnostic messages that occur
Configuration of the device address	▪ DIP switches on the I/O electronics module ▪ Local display ▪ Via operating tools (e.g. FieldCare)
Compatibility with earlier model	If the device is replaced, the measuring device Promag 500 supports the compatibility of the cyclic data with previous models. It is not necessary to adjust the engineering parameters of the PROFIBUS network with the Promag 500 GSD file. Earlier models: ▪ Promag 50 PROFIBUS PA ▪ ID No.: 1525 (hex) ▪ Extended GSD file: EH3x1525.gsd ▪ Standard GSD file: EH3_1525.gsd ▪ Promag 53 PROFIBUS PA ▪ ID No.: 1527 (hex) ▪ Extended GSD file: EH3x1527.gsd ▪ Standard GSD file: EH3_1527.gsd Description of the function scope of compatibility: Operating Instructions → 109.
System integration	Information regarding system integration: Operating Instructions → 109. ▪ Cyclic data transmission ▪ Block model ▪ Description of the modules

Modbus RS485

Protocol	Modbus Applications Protocol Specification V1.1
Response times	▪ Direct data access: typically 25 to 50 ms ▪ Auto-scan buffer (data range): typically 3 to 5 ms
Device type	Slave
Slave address range	1 to 247
Broadcast address range	0
Function codes	▪ 03: Read holding register ▪ 04: Read input register ▪ 06: Write single registers ▪ 08: Diagnostics ▪ 16: Write multiple registers ▪ 23: Read/write multiple registers
Broadcast messages	Supported by the following function codes: ▪ 06: Write single registers ▪ 16: Write multiple registers ▪ 23: Read/write multiple registers
Supported baud rate	▪ 1 200 BAUD ▪ 2 400 BAUD ▪ 4 800 BAUD ▪ 9 600 BAUD ▪ 19 200 BAUD ▪ 38 400 BAUD ▪ 57 600 BAUD ▪ 115 200 BAUD
Data transfer mode	▪ ASCII ▪ RTU

Data access	Each device parameter can be accessed via Modbus RS485. For Modbus register information
Compatibility with earlier model	If the device is replaced, the measuring device Promag 500 supports the compatibility of the Modbus registers for the process variables and the diagnostic information with the previous model Promag 53. It is not necessary to change the engineering parameters in the automation system. Description of the function scope of compatibility: Operating Instructions → 109.
System integration	Information on system integration: Operating Instructions → 109. ▪ Modbus RS485 information ▪ Function codes ▪ Register information ▪ Response time ▪ Modbus data map

EtherNet/IP

Protocol	▪ The CIP Networks Library Volume 1: Common Industrial Protocol ▪ The CIP Networks Library Volume 2: EtherNet/IP Adaptation of CIP
Communication type	▪ 10Base-T ▪ 100Base-TX
Device profile	Generic device (product type: 0x2B)
Manufacturer ID	0x11
Device type ID	0x103C
Baud rates	Automatic $^{10}/_{100}$ Mbit with half-duplex and full-duplex detection
Polarity	Auto-polarity for automatic correction of crossed TxD and RxD pairs
Supported CIP connections	Max. 3 connections
Explicit connections	Max. 6 connections
I/O connections	Max. 6 connections (scanner)
Configuration options for measuring device	▪ DIP switches on the electronics module for IP addressing ▪ Manufacturer-specific software (FieldCare) ▪ Add-on Profile Level 3 for Rockwell Automation control systems ▪ Web browser ▪ Electronic Data Sheet (EDS) integrated in the measuring device
Configuration of the EtherNet interface	▪ Speed: 10 MBit, 100 MBit, auto (factory setting) ▪ Duplex: half-duplex, full-duplex, auto (factory setting)
Configuration of the device address	▪ DIP switches on the electronics module for IP addressing (last octet) ▪ DHCP ▪ Manufacturer-specific software (FieldCare) ▪ Add-on Profile Level 3 for Rockwell Automation control systems ▪ Web browser ▪ EtherNet/IP tools, e.g. RSLinx (Rockwell Automation)
Device Level Ring (DLR)	Yes
System integration	Information regarding system integration: Operating Instructions → 109. ▪ Cyclic data transmission ▪ Block model ▪ Input and output groups

PROFINET

Protocol	Application layer protocol for decentral device periphery and distributed automation, Version 2.3
Communication type	100 MBit/s

Conformity class	Conformance Class B
Netload Class	Netload Class II
Baud rates	Automatic 100 Mbit/s with full-duplex detection
Cycle times	From 8 ms
Polarity	Auto-polarity for automatic correction of crossed TxD and RxD pairs
Media Redundancy Protocol (MRP)	Yes
System redundancy support	System redundancy S2 (2 AR with 1 NAP)
Device profile	Application interface identifier 0xF600 Generic device
Manufacturer ID	0x11
Device type ID	0x843C
Device description files (GSD, DTM, DD)	Information and files under: ▪ www.endress.com On the product page for the device: Documents/Software → Device drivers ▪ www.profibus.org
Supported connections	▪ 2 x AR (IO Controller AR) ▪ 1 x AR (IO-Supervisor Device AR connection allowed) ▪ 1 x Input CR (Communication Relation) ▪ 1 x Output CR (Communication Relation) ▪ 1 x Alarm CR (Communication Relation)
Configuration options for measuring device	▪ DIP switches on the electronics module, for device name assignment (last part) ▪ Manufacturer-specific software (FieldCare, DeviceCare) ▪ Web browser ▪ Device master file (GSD), can be read out via the integrated Web server of the measuring device
Configuration of the device name	▪ DIP switches on the electronics module, for device name assignment (last part) ▪ DCP protocol ▪ Process Device Manager (PDM) ▪ Integrated Web server
Supported functions	▪ Identification & Maintenance Simple device identification via: ▪ Control system ▪ Nameplate ▪ Measured value status The process variables are communicated with a measured value status ▪ Blinking feature via the onsite display for simple device identification and assignment ▪ Device operation via operating tools (e.g. FieldCare, DeviceCare, SIMATIC PDM)
System integration	Information regarding system integration: Operating Instructions → 109. ▪ Cyclic data transmission ▪ Overview and description of the modules ▪ Status coding ▪ Startup configuration ▪ Factory setting

Power supply

Terminal assignment

Transmitter: supply voltage, input/outputs

HART

Supply voltage		Input/output 1		Input/output 2		Input/output 3		Input/output 4	
1 (+)	2 (–)	26 (+)	27 (–)	24 (+)	25 (–)	22 (+)	23 (–)	20 (+)	21 (–)
		Device-specific terminal assignment: adhesive label in terminal cover.→ 🖹 13.							

FOUNDATION Fieldbus

Supply voltage		Input/output 1		Input/output 2		Input/output 3		Input/output 4	
1 (+)	2 (–)	26 (A)	27 (B)	24 (+)	25 (–)	22 (+)	23 (–)	20 (+)	21 (–)
		Device-specific terminal assignment: adhesive label in terminal cover. → 🖹 13.							

PROFIBUS DP

Supply voltage		Input/output 1		Input/output 2		Input/output 3		Input/output 4	
1 (+)	2 (–)	26 (B)	27 (A)	24 (+)	25 (–)	22 (+)	23 (–)	20 (+)	21 (–)
		Device-specific terminal assignment: adhesive label in terminal cover. → 🖹 13.							

PROFIBUS PA

Supply voltage		Input/output 1		Input/output 2		Input/output 3		Input/output 4	
1 (+)	2 (–)	26 (B)	27 (A)	24 (+)	25 (–)	22 (+)	23 (–)	20 (+)	21 (–)
		Device-specific terminal assignment: adhesive label in terminal cover. → 🖹 13.							

Modbus RS485

Supply voltage		Input/output 1		Input/output 2		Input/output 3		Input/output 4	
1 (+)	2 (–)	26 (B)	27 (A)	24 (+)	25 (–)	22 (+)	23 (–)	20 (+)	21 (–)
		Device-specific terminal assignment: adhesive label in terminal cover. → 🖹 13.							

EtherNet/IP

Supply voltage		Input/output 1	Input/output 2		Input/output 3		Input/output 4	
1 (+)	2 (–)	EtherNet/IP (RJ45 connector)	24 (+)	25 (–)	22 (+)	23 (–)	20 (+)	21 (–)
			Device-specific terminal assignment: adhesive label in terminal cover.→ 🖹 13.					

PROFINET

Supply voltage		Input/output 1	Input/output 2		Input/output 3		Input/output 4	
1 (+)	2 (–)	PROFINET (RJ45 connector)	24 (+)	25 (–)	22 (+)	23 (–)	20 (+)	21 (–)
			Device-specific terminal assignment: adhesive label in terminal cover. → 🖹 13.					

Transmitter and sensor connection housing: connecting cable

The sensor and transmitter, which are mounted in separate locations, are interconnected by a connecting cable. The cable is connected via the sensor connection housing and the transmitter housing.

Terminal assignment and connection of the connecting cable:
- Proline 500 – digital→ 🖹 33
- Proline 500 → 🖹 33

Device plugs available

Device plugs may not be used in hazardous areas!

Device plugs for fieldbus systems:
Order code for "Input; output 1"
- Option **SA** "FOUNDATION Fieldbus" → 🖹 30
- Option **GA** "PROFIBUS PA" → 🖹 30
- Option **NA** "EtherNet/IP" → 🖹 30
- Option **RA** "PROFINET" → 🖹 30

Device plug for connecting to the service interface:
Order code for "Accessory mounted"
option **NB**, adapter RJ45 M12 (service interface) → 🖹 32

Order code for "Input; output 1", option SA "FOUNDATION Fieldbus"

Order code for "Electrical connection"	Cable entry/connection → 🖹 33	
	2	3
M, 3, 4, 5	7/8" connector	–

Order code for "Input; output 1", option GA "PROFIBUS PA"

Order code for "Electrical connection"	Cable entry/connection → 🖹 33	
	2	3
L, N, P, U	Connector M12 × 1	–

Order code for "Input; output 1", option NA "EtherNet/IP"

Order code for "Electrical connection"	Cable entry/connection → 🖹 33	
	2	3
L, N, P, U	Connector M12 × 1	–
R [1) 2)], S [1) 2)], T [1) 2)], V [1) 2)]	Connector M12 × 1	Connector M12 × 1

1) Cannot be combined with an external WLAN antenna (order code for "Enclosed accessories", option P8) of an RJ45 M12 adapter for the service interface (order code for "Accessories mounted", option NB) or of the remote display and operating module DKX001
2) Suitable for integrating the device in a ring topology.

Order code for "Input; output 1", option RA "PROFINET"

Order code for "Electrical connection"	Cable entry/connection → 🖹 33	
	2	3
L, N, P, U	Connector M12 × 1	–
R [1) 2)], S [1) 2)], T [1) 2)], V [1) 2)]	Connector M12 × 1	Connector M12 × 1

1) Cannot be combined with an external WLAN antenna (order code for "Enclosed accessories", option P8) of an RJ45 M12 adapter for the service interface (order code for "Accessories mounted", option NB) or of the remote display and operating module DKX001.
2) Suitable for integrating the device in a ring topology.

Order code for "Accessory mounted", option NB "Adapter RJ45 M12 (service interface)"

Order code "Accessory mounted"	Cable entry/coupling → 🖹 33	
	Cable entry 2	Cable entry 3
NB	Plug M12 × 1	–

Pin assignment, device plug

FOUNDATION Fieldbus

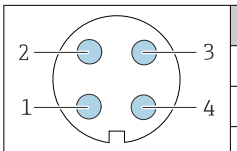

Pin		Assignment	Coding	Plug/socket
1	+	Signal +	A	Plug
2	-	Signal –		
3		Grounding		
4		Not assigned		

PROFIBUS PA

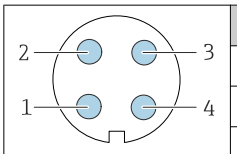

Pin		Assignment	Coding	Plug/socket
1	+	PROFIBUS PA +	A	Plug
2		Grounding		
3	-	PROFIBUS PA –		
4		Not assigned		

PROFINET

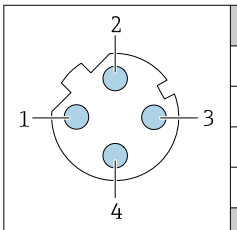

Pin		Assignment
1	+	TD +
2	+	RD +
3	-	TD –
4	-	RD –
Coding		**Plug/socket**
D		Socket

Recommended plug:
- Binder, series 763, part no. 99 3729 810 04
- Phoenix, part no. 1543223 SACC-M12MSD-4Q

EtherNet/IP

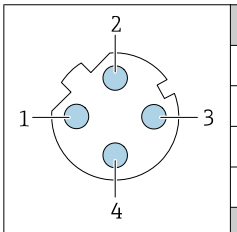

Pin		Assignment
1	+	Tx
2	+	Rx
3	-	Tx
4	-	Rx
Coding		**Plug/socket**
D		Socket

Recommended plug:
- Binder, series 763, part no. 99 3729 810 04
- Phoenix, part no. 1543223 SACC-M12MSD-4Q

Service interface

Order code for "Accessories mounted", option **NB**: Adapter RJ45 M12 (service interface)

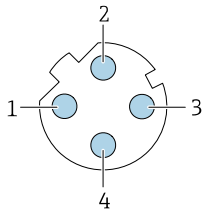

Pin		Assignment
1	+	Tx
2	+	Rx
3	-	Tx
4	-	Rx
Coding		**Plug/socket**
D		Socket

Recommended plug:
- Binder, series 763, part no. 99 3729 810 04
- Phoenix, part no. 1543223 SACC-M12MSD-4Q

Supply voltage

Order code for "Power supply"	Terminal voltage		Frequency range
Option **D**	DC 24 V	±20%	–
Option **E**	AC 100 to 240 V	−15 to +10%	50/60 Hz, ±4 Hz
Option **I**	DC 24 V	±20%	–
	AC 100 to 240 V	−15 to +10%	50/60 Hz, ±4 Hz

Power consumption

Transmitter

Max. 10 W (active power)

switch-on current	Max. 36 A (<5 ms) as per NAMUR Recommendation NE 21

Current consumption

Transmitter

- Max. 400 mA (24 V)
- Max. 200 mA (110 V, 50/60 Hz; 230 V, 50/60 Hz)

Power supply failure

- Totalizers stop at the last value measured.
- Depending on the device version, the configuration is retained in the device memoryor in the pluggable data memory (HistoROM DAT).
- Error messages (incl. total operated hours) are stored.

Electrical connection

Connection of connecting cable: Proline 500 – digital

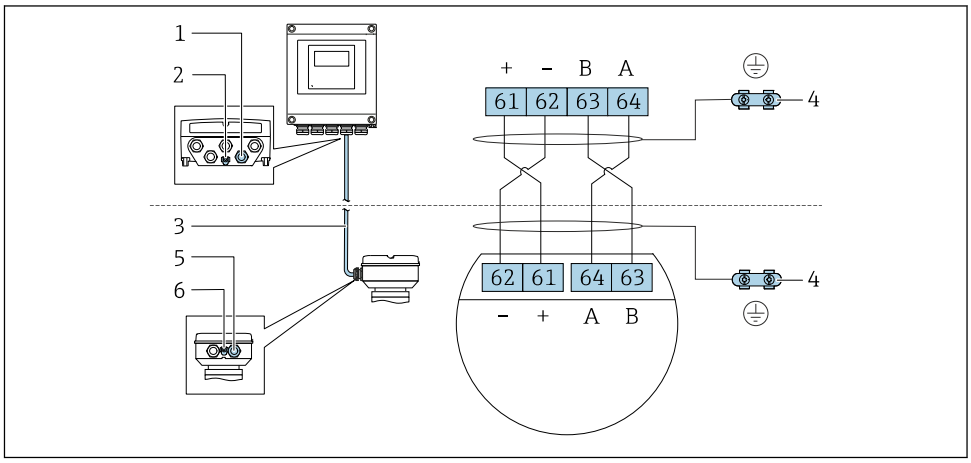

1 *Cable entry for cable on transmitter housing*
2 *Protective ground (PE)*
3 *Connecting cable ISEM communication*
4 *Grounding via ground connection; on device plug versions grounding is through the plug itself*
5 *Cable entry for cable or connection of device plug on sensor connection housing*
6 *Protective ground (PE)*

Connection of the connecting cable: Proline 500

The connecting cable is connected via terminals.

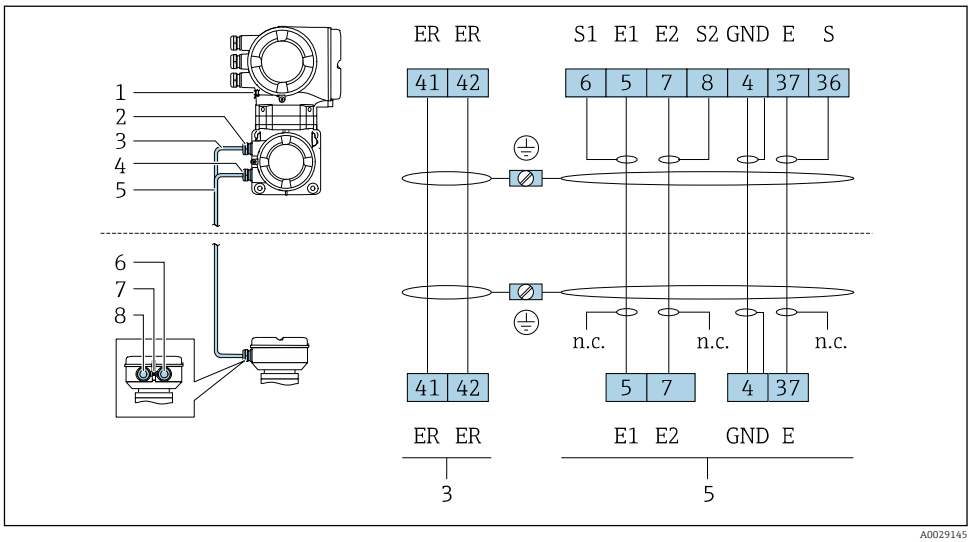

1 *Protective ground (PE)*
2 *Cable entry for coil current cable on transmitter connection housing*
3 *Coil current cable*
4 *Cable entry for signal cable on transmitter connection housing*
5 *Signal cable*
6 *Cable entry for signal cable on sensor connection housing*
7 *Protective ground (PE)*
8 *Cable entry for coil current cable on sensor connection housing*

Connecting the transmitter

- Terminal assignment → 29
- Device plug pin assignment → 31

Connecting the Proline 500 – digital transmitter

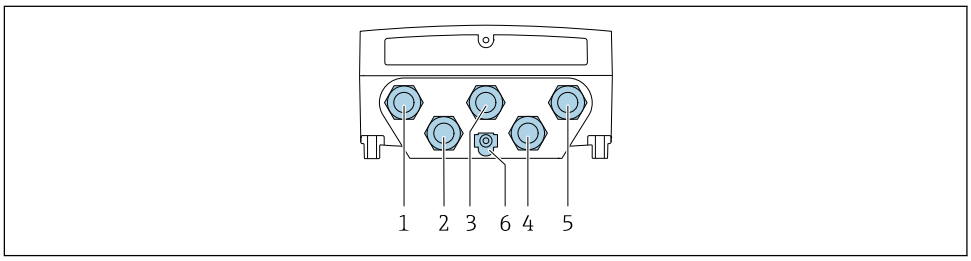

1 Terminal connection for supply voltage
2 Terminal connection for signal transmission, input/output
3 Terminal connection for signal transmission, input/output
4 Terminal connection for connecting cable between sensor and transmitter
5 Terminal connection for signal transmission, input/output or terminal for network connection (DHCP client) via service interface (CDI-RJ45); optional: terminal connection for external WLAN antenna
6 Protective ground (PE)

An adapter for RJ45 and the M12 connector is optionally available:
Order code for "Accessories", option **NB**: "Adapter RJ45 M12 (service interface)"

The adapter connects the service interface (CDI-RJ45) to an M12 connector mounted in the cable entry. Therefore the connection to the service interface can be established via an M12 connector without opening the device.

Network connection (DHCP client) via service interface (CDI-RJ45) → 📄 95

Connecting the Proline 500 transmitter

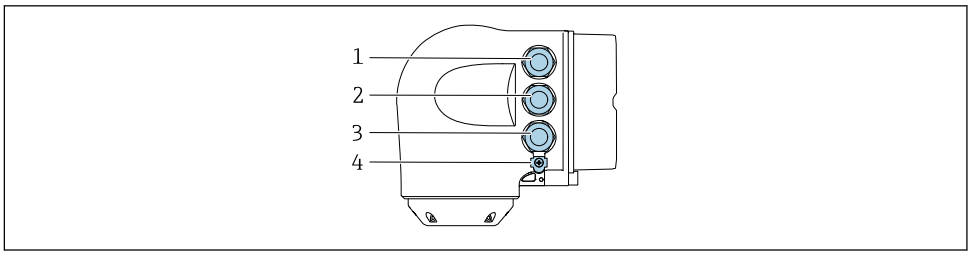

1 Terminal connection for supply voltage
2 Terminal connection for signal transmission, input/output
3 Terminal connection for signal transmission, input/output or terminal for network connection (DHCP client) via service interface (CDI-RJ45); optional: terminal connection for external WLAN antenna
4 Protective ground (PE)

An adapter for RJ45 and the M12 connector is optionally available:
Order code for "Accessories", option **NB**: "Adapter RJ45 M12 (service interface)"

The adapter connects the service interface (CDI-RJ45) to an M12 connector mounted in the cable entry. Therefore the connection to the service interface can be established via an M12 connector without opening the device.

Network connection (DHCP client) via service interface (CDI-RJ45) → 📄 95

Connecting in a ring topology

Device versions with EtherNet/IP and PROFINET communication protocols can be integrated into a ring topology. The device is integrated via the terminal connection for signal transmission (output 1) and the connection to the service interface (CDI-RJ45).

Transmitters with an Ex de approval may **not** be connected via the service interface (CDI-RJ45)! Order code for "Approval transmitter + sensor", options (Ex de):
BB, C2, GB, MB, NB

Integrating the transmitter into a ring topology:
- EtherNet/IP
- PROFINET

Transmitter: Proline 500 – digital

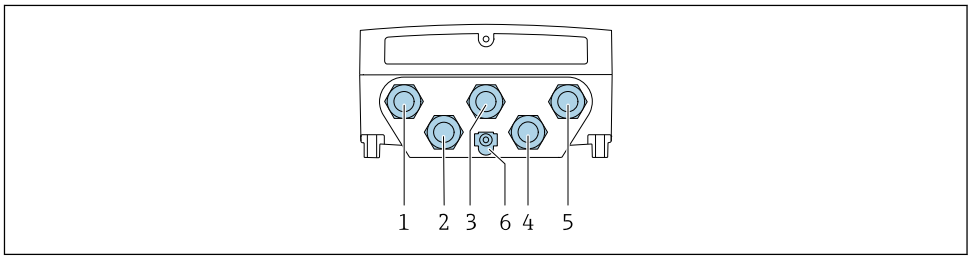

A0028200

1 Terminal connection for supply voltage
2 Terminal connection for signal transmission, input/output
2 Terminal connection for signal transmission: PROFINET or EtherNet/IP (RJ45 connector)
4 Terminal connection for connecting cable between sensor and transmitter
5 Terminal connection to service interface (CDI-RJ45)
6 Protective ground (PE)

Transmitter: Proline 500

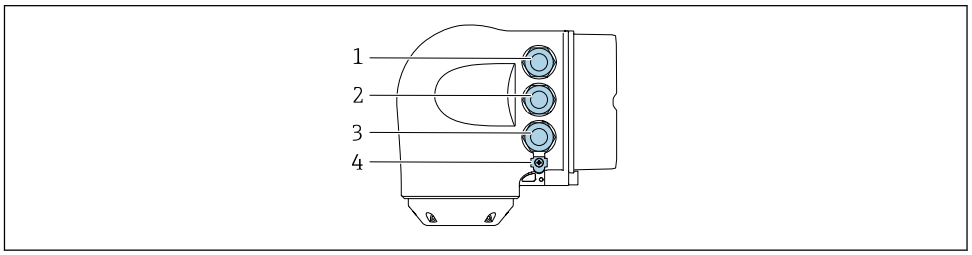

A0026781

1 Terminal connection for supply voltage
2 Terminal connection for signal transmission: PROFINET or EtherNet/IP (RJ45 connector)
3 Terminal connection to service interface (CDI-RJ45)
4 Protective ground (PE)

If the device has additional inputs/outputs, these are routed in parallel via the cable entry for connection to the service interface (CDI-RJ45).

Connection examples

Current output 4 to 20 mA HART

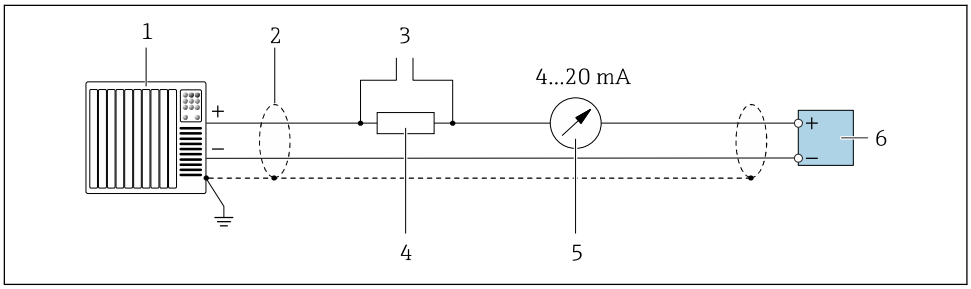

2 Connection example for 4 to 20 mA HART current output (active)

1 *Automation system with current input (e.g. PLC)*
2 *Cable shield provided at one end. The cable shield must be grounded at both ends to comply with EMC requirements; observe cable specifications → 46*
3 *Connection for HART operating devices → 89*
4 *Resistor for HART communication (≥ 250 Ω): observe maximum load → 15*
5 *Analog display unit: observe maximum load → 15*
6 *Transmitter*

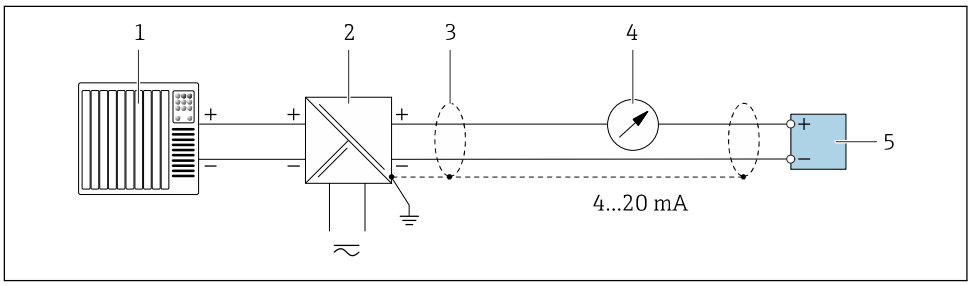

3 Connection example for 4 to 20 mA HART current output (passive)

1 *Automation system with current input (e.g. PLC)*
2 *Power supply*
3 *Cable shield provided at one end. The cable shield must be grounded at both ends to comply with EMC requirements; observe cable specifications → 46*
4 *Analog display unit: observe maximum load → 15*
5 *Transmitter*

HART input

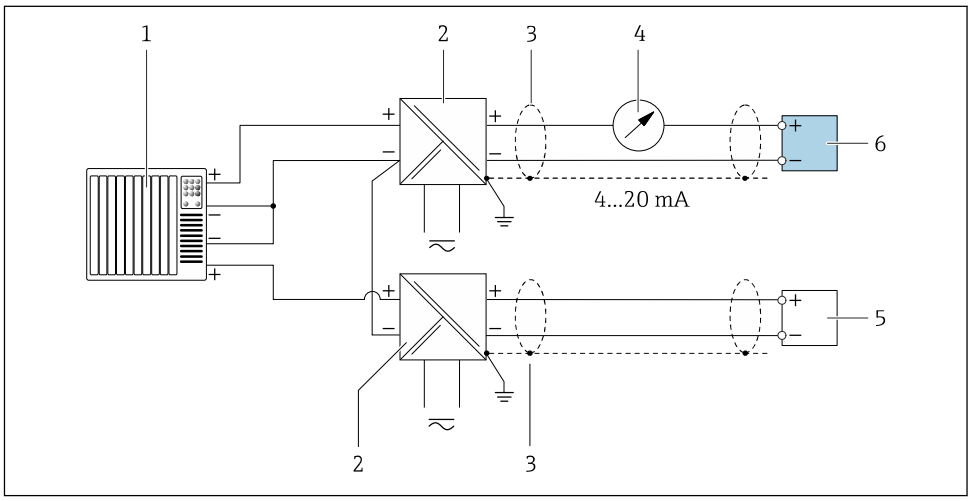

4 Connection example for HART input with a common negative (passive)

1 *Automation system with HART output (e.g. PLC)*
2 *Active barrier for power supply (e.g. RN221N)*
3 *Cable shield provided at one end. The cable shield must be grounded at both ends to comply with EMC requirements; observe cable specifications*
4 *Analog display unit: observe maximum load → 15*
5 *Pressure measuring device (e.g. Cerabar M, Cerabar S): see requirements*
6 *Transmitter*

PROFIBUS PA

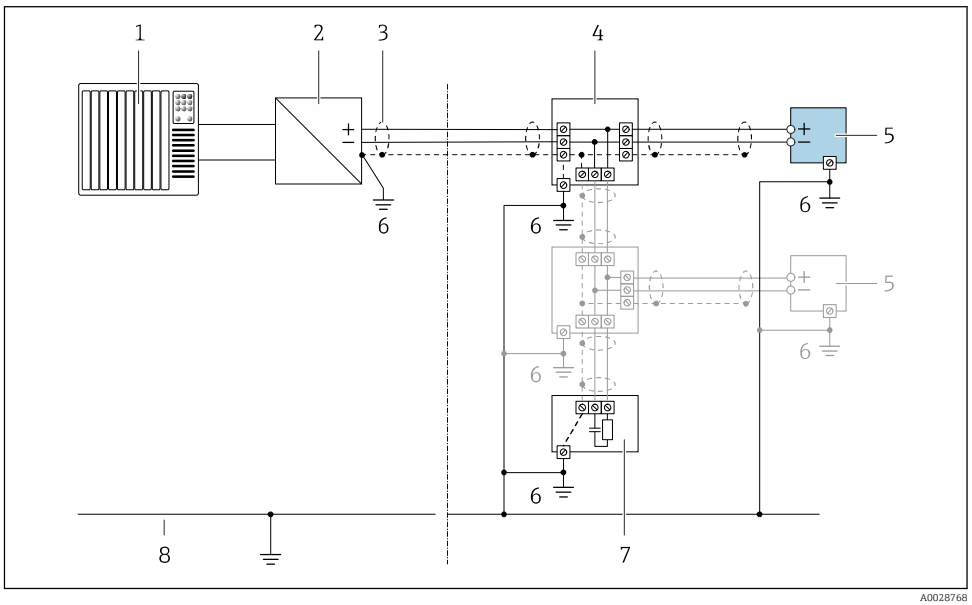

5 Connection example for PROFIBUS PA

1 *Control system (e.g. PLC)*
2 *PROFIBUS PA segment coupler*
3 *Cable shield provided at one end. The cable shield must be grounded at both ends to comply with EMC requirements; observe cable specifications*
4 *T-box*
5 *Measuring device*
6 *Local grounding*
7 *Bus terminator*
8 *Potential matching line*

PROFIBUS DP

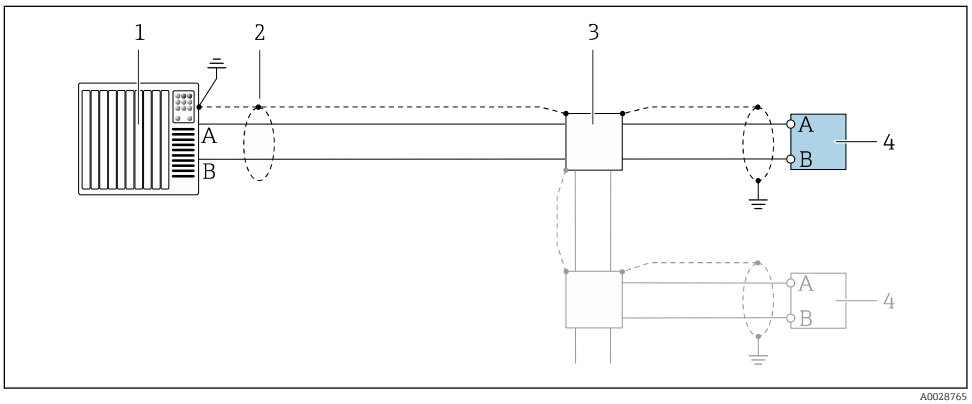

6 *Connection example for PROFIBUS DP, non-hazardous area and Zone 2/Div. 2*

1 *Control system (e.g. PLC)*
2 *Cable shield provided at one end. The cable shield must be grounded at both ends to comply with EMC requirements; observe cable specifications*
3 *Distribution box*
4 *Transmitter*

If baud rates > 1.5 MBaud an EMC cable entry must be used and the cable shield must continue as far as the terminal wherever possible.

EtherNet/IP

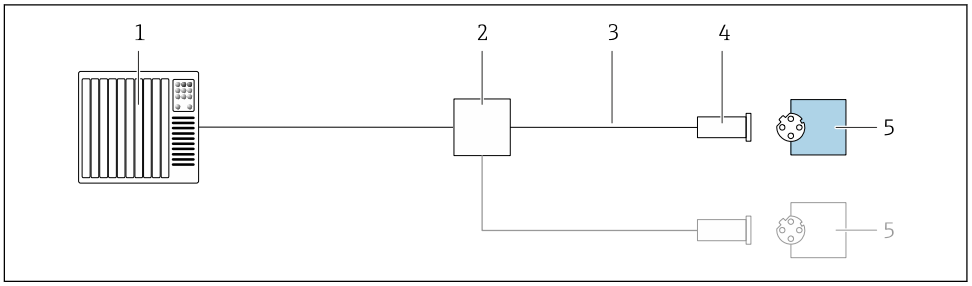

7 *Connection example for EtherNet/IP*

1 *Control system (e.g. PLC)*
2 *Ethernet switch*
3 *Observe cable specifications*
4 *Device plug*
5 *Transmitter*

EtherNet/IP: DLR (Device Level Ring)

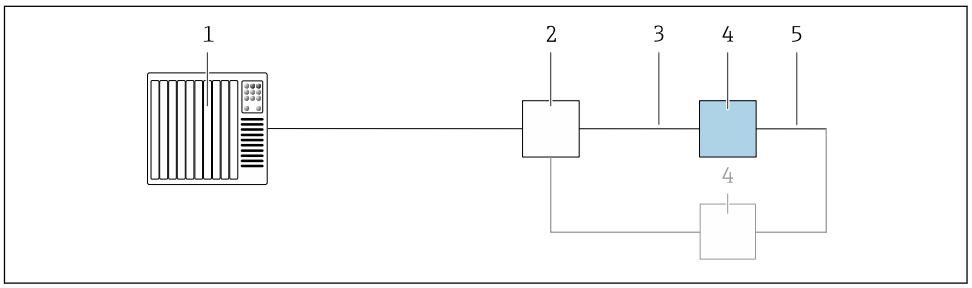

1 Control system (e.g. PLC)
2 Ethernet switch
3 Observe cable specifications → 46
4 Transmitter
5 Connecting cable between the two transmitters

PROFINET

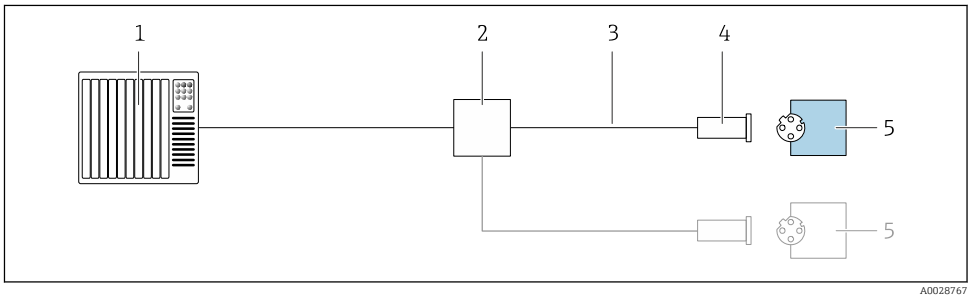

8 Connection example for PROFINET

1 Control system (e.g. PLC)
2 Ethernet switch
3 Observe cable specifications
4 Device plug
5 Transmitter

PROFINET: MRP (Media Redundancy Protocol)

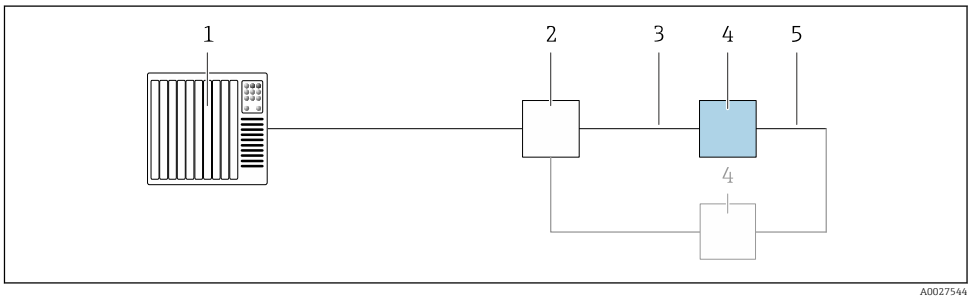

1 Control system (e.g. PLC)
2 Ethernet switch
3 Observe cable specifications → 46
4 Transmitter
5 Connecting cable between the two transmitters

PROFINET: system redundancy S2

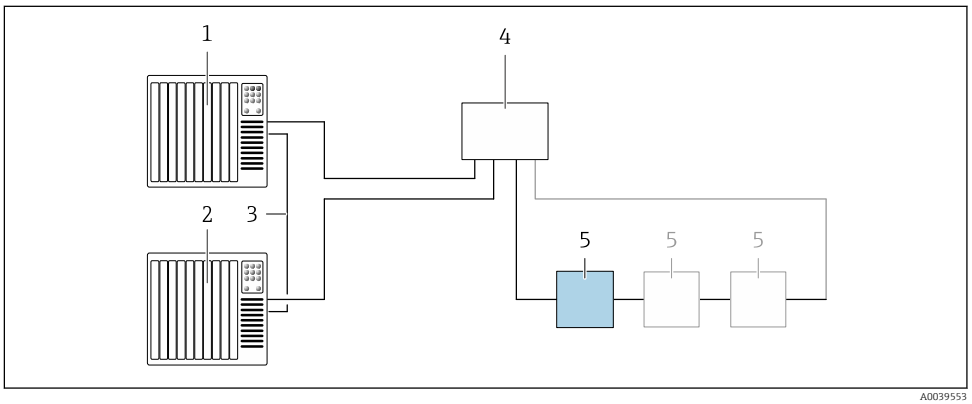

9 Connection example for system redundancy S2

1 *Control system 1 (e.g. PLC)*
2 *Synchronization of control systems*
3 *Control system 2 (e.g. PLC)*
4 *Industrial Ethernet Managed Switch*
5 *Transmitter*

FOUNDATION Fieldbus

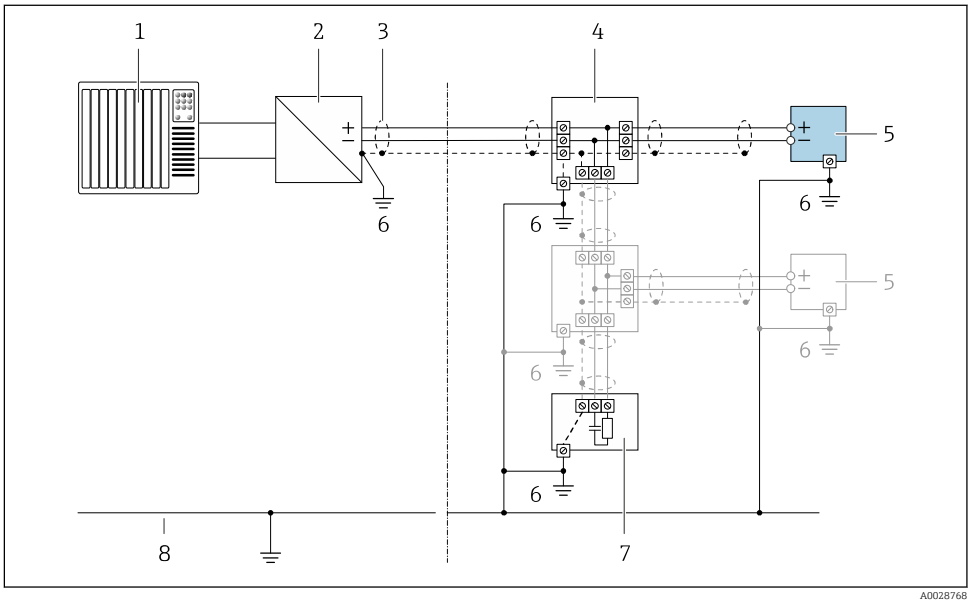

10 Connection example for FOUNDATION Fieldbus

1 *Control system (e.g. PLC)*
2 *Power Conditioner (FOUNDATION Fieldbus)*
3 *Cable shield provided at one end. The cable shield must be grounded at both ends to comply with EMC requirements; observe cable specifications*
4 *T-box*
5 *Measuring device*
6 *Local grounding*
7 *Bus terminator*
8 *Potential matching line*

Modbus RS485

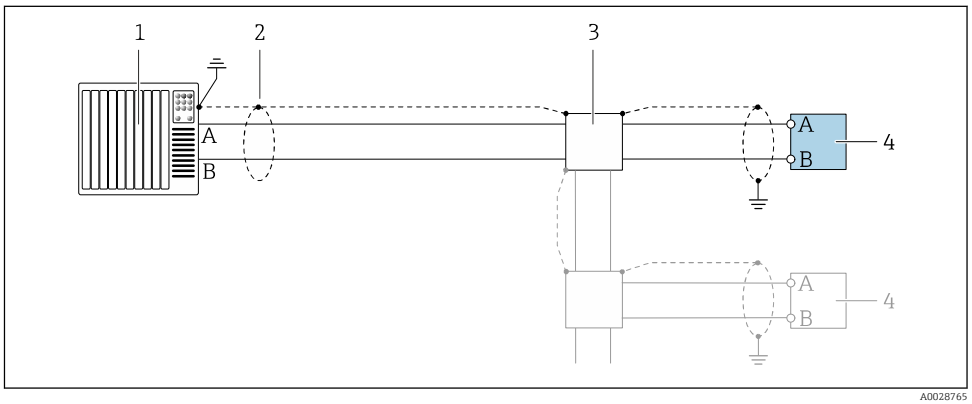

11 Connection example for Modbus RS485, non-hazardous area and Zone 2/Div. 2

1 Control system (e.g. PLC)
2 Cable shield provided at one end. The cable shield must be grounded at both ends to comply with EMC requirements; observe cable specifications
3 Distribution box
4 Transmitter

Current output 4-20 mA

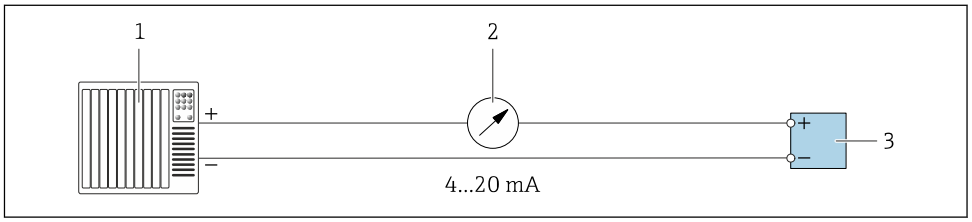

12 Connection example for 4-20 mA current output (active)

1 Automation system with current input (e.g. PLC)
2 Analog display unit: observe maximum load → 15
3 Transmitter

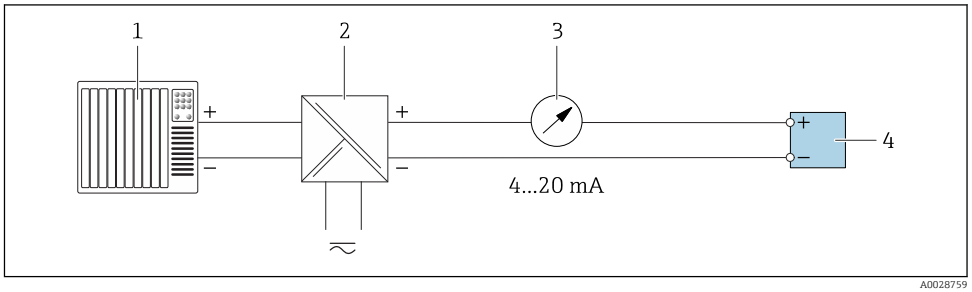

13 Connection example for 4-20 mA current output (passive)

1 Automation system with current input (e.g. PLC)
2 Active barrier for power supply (e.g. RN221N)
3 Analog display unit: observe maximum load → 15
4 Transmitter

Pulse/frequency output

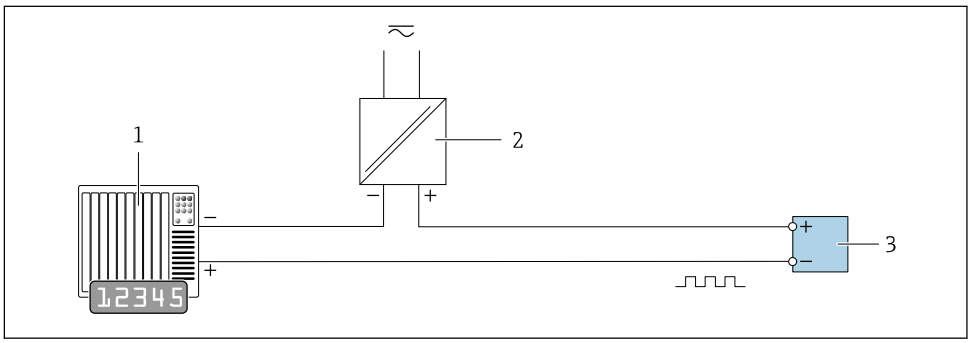

14 Connection example for pulse/frequency output (passive)

1 Automation system with pulse/frequency input (e.g. PLC)
2 Power supply
3 Transmitter: Observe input values → 17

Switch output

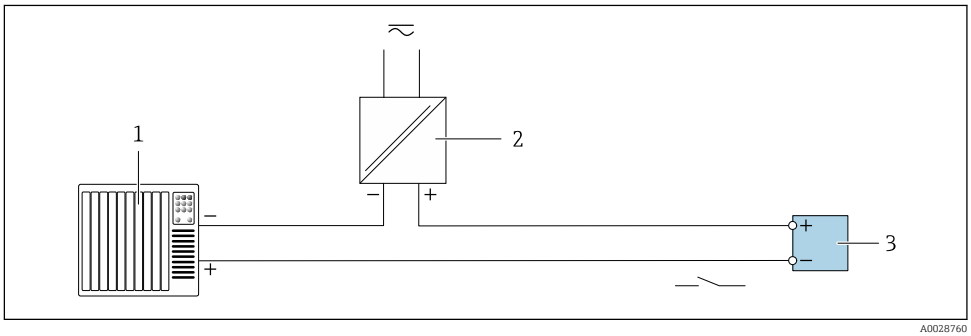

15 Connection example for switch output (passive)

1 Automation system with switch input (e.g. PLC)
2 Power supply
3 Transmitter: Observe input values → 17

Double pulse output

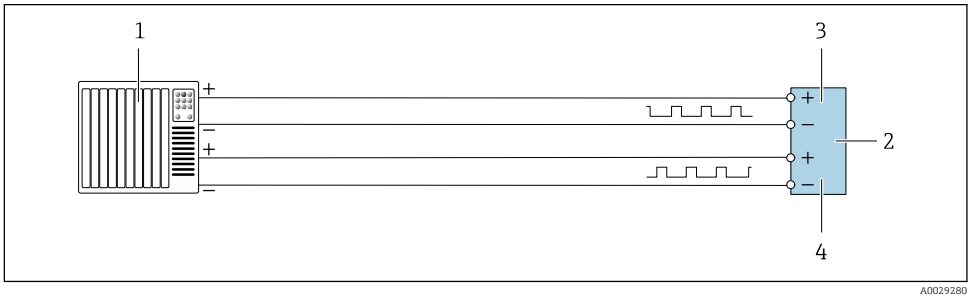

16 Connection example for double pulse output (active)

1 Automation system with double pulse input (e.g. PLC)
2 Transmitter: Observe input values → 18
3 Double pulse output
4 Double pulse output (slave), phase-shifted

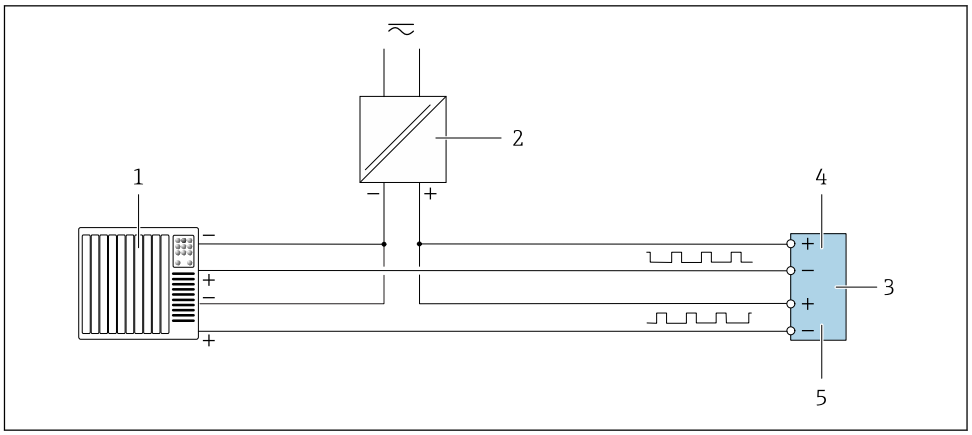

17 *Connection example for double pulse output (passive)*

1 *Automation system with double pulse input (e.g. PLC)*
2 *Power supply*
3 *Transmitter: Observe input values → 18*
4 *Double pulse output*
5 *Double pulse output (slave), phase-shifted*

Relay output

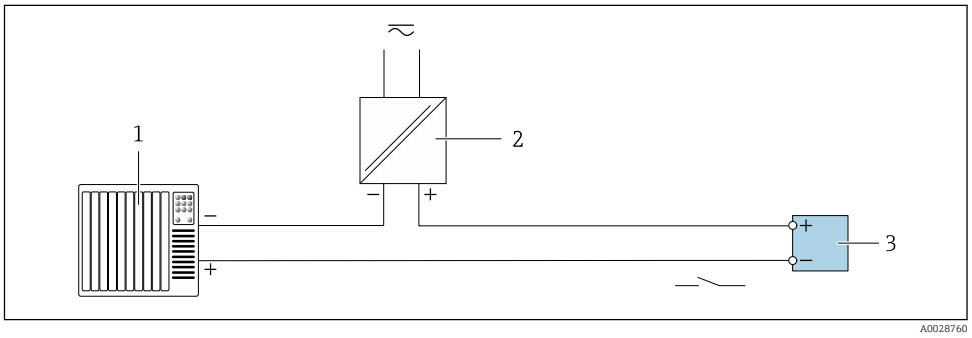

18 *Connection example for relay output (passive)*

1 *Automation system with relay input (e.g. PLC)*
2 *Power supply*
3 *Transmitter: Observe input values → 19*

Current input

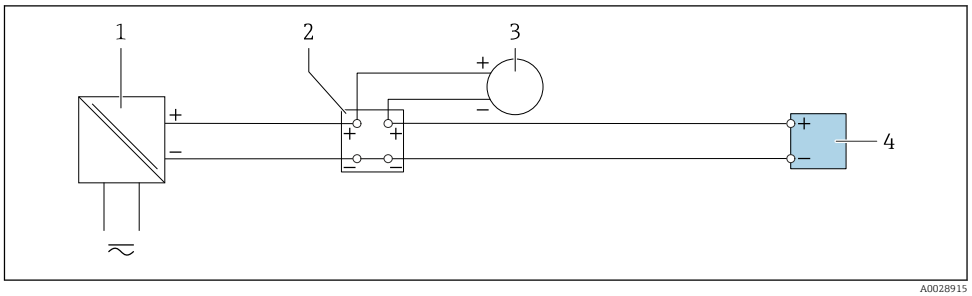

19 *Connection example for 4 to 20 mA current input*

1 *Power supply*
2 *Terminal box*
3 *External measuring device (to read in pressure or temperature, for instance)*
4 *Transmitter*

Status input

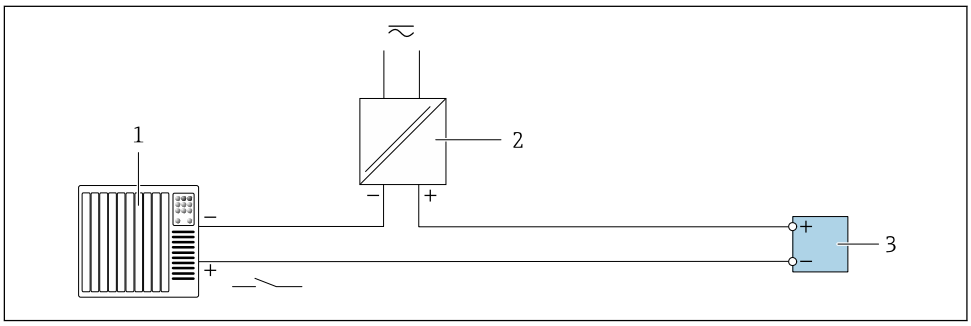

20 *Connection example for status input*

1 *Automation system with status output (e.g. PLC)*
2 *Power supply*
3 *Transmitter*

Potential equalization

Requirements

Please consider the following to ensure correct measurement:
- Same electrical potential for the fluid and sensor
- Company-internal grounding concepts
- Pipe material and grounding

Connection example, standard scenario

Metal, grounded pipe

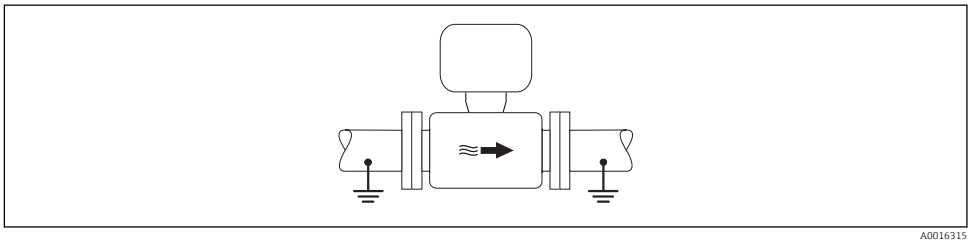

21 *Potential equalization via measuring tube*

Connection example in special situations

Unlined and ungrounded metal pipe

This connection method also applies in situations where:
- The customary potential equalization is not used
- Equalizing currents are present

Ground cable	Copper wire, at least 6 mm² (0.0093 in²)

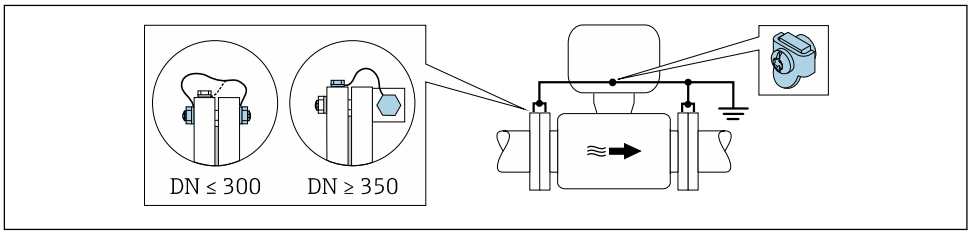

22 *Potential equalization via ground terminal and pipe flanges*

Note the following when installing:
- Connect both sensor flanges to the pipe flange via a ground cable and ground them.
- Connect the connection housing of the transmitter or sensor to ground potential by means of the ground terminal provided for the purpose. To mount the ground cable:
  - If DN ≤ 300 (12"): Mount the ground cable directly on the conductive flange coating of the sensor with the flange screws.
  - If DN ≥ 350 (14"): Mount the ground cable directly on the metal transport bracket.

You can order the necessary ground cable from Endress+Hauser: → 106.

Plastic pipe or pipe with insulating liner

This connection method also applies in situations where:
- Standard company potential equalization cannot be guaranteed
- Equalizing currents can be expected

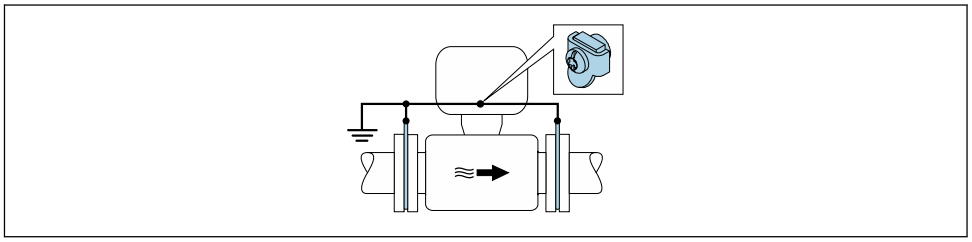

A0029339

23 Potential equalization via ground terminal and ground disks

Note the following when installing:
The ground disks must be connected to the ground terminal via the ground cable and be connected to ground potential.

The ground cable and ground disks can be ordered from Endress+Hauser → 106.

Pipe with a cathodic protection unit

This connection method is only used if the following two conditions are met:
- Metal pipe without liner or pipe with electrically conductive liner
- Cathodic protection is integrated in the personal protection equipment

Ground cable	Copper wire, at least 6 mm² (0.0093 in²)

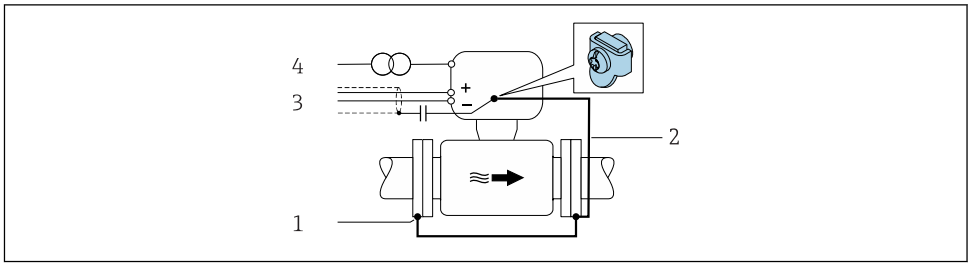

A0030377

1 Connection of the two flanges of the pipe via a ground cable
2 Signal line shielding via a capacitor
3 Measuring device connected to power supply such that it is floating in relation to the protective ground (isolation transformer)

Note the following when installing:
The sensor is installed in the pipe in a way that provides electrical insulation.

You can order the necessary ground cable from Endress+Hauser: → 106.

Terminals

Spring-loaded terminals: Suitable for strands and strands with ferrules.
Conductor cross-section 0.2 to 2.5 mm² (24 to 12 AWG).

Cable entries

- Cable gland: M20 × 1.5 with cable Ø 6 to 12 mm (0.24 to 0.47 in)
- Thread for cable entry:
  - NPT ½"
  - G ½"
  - M20
- Device plug for digital communication: M12
  Only available for certain device versions → 30.

Cable specification

Permitted temperature range

- The installation guidelines that apply in the country of installation must be observed.
- The cables must be suitable for the minimum and maximum temperatures to be expected.

Power supply cable (incl. conductor for the inner ground terminal)

Standard installation cable is sufficient.

Protective grounding cable for the outer ground terminal

Conductor cross-section ≤2.08 mm² (14 AWG)

Grounding impedance must be less than 2 Ω.

Signal cable

Current output 4 to 20 mA HART

A shielded cable is recommended. Observe grounding concept of the plant.

PROFIBUS PA

Twisted, shielded two-wire cable. Cable type A is recommended .

For further information on planning and installing PROFIBUS networks see:
- Operating Instructions "PROFIBUS DP/PA: Guidelines for planning and commissioning" (BA00034S)
- PNO Directive 2.092 "PROFIBUS PA User and Installation Guideline"
- IEC 61158-2 (MBP)

PROFIBUS DP

The IEC 61158 standard specifies two types of cable (A and B) for the bus line which can be used for every transmission rate. Cable type A is recommended.

Cable type	A
Characteristic impedance	135 to 165 Ω at a measuring frequency of 3 to 20 MHz
Cable capacitance	< 30 pF/m
Wire cross-section	> 0.34 mm² (22 AWG)
Cable type	Twisted pairs
Loop resistance	≤110 Ω/km
Signal damping	Max. 9 dB over the entire length of the cable cross-section
Shield	Copper braided shielding or braided shielding with foil shield. When grounding the cable shield, observe the grounding concept of the plant.

For further information on planning and installing PROFIBUS networks see:
- Operating Instructions "PROFIBUS DP/PA: Guidelines for planning and commissioning" (BA00034S)
- PNO Directive 2.092 "PROFIBUS PA User and Installation Guideline"
- IEC 61158-2 (MBP)

EtherNet/IP

The standard ANSI/TIA/EIA-568-B.2 Annex specifies CAT 5 as the minimum category for a cable used for EtherNet/IP. CAT 5e and CAT 6 are recommended.

For more information on planning and installing EtherNet/IP networks, please refer to the "Media Planning and Installation Manual. EtherNet/IP" of ODVA Organization

PROFINET

Standard IEC 61156-6 specifies CAT 5 as the minimum category for a cable used for PROFINET. CAT 5e and CAT 6 are recommended.

For more information on planning and installing PROFINET networks, see: "PROFINET Cabling and Interconnection Technology", Guideline for PROFINET

FOUNDATION Fieldbus

Twisted, shielded two-wire cable.

For further information on planning and installing FOUNDATION Fieldbus networks see:

- Operating Instructions for "FOUNDATION Fieldbus Overview" (BA00013S)
- FOUNDATION Fieldbus Guideline
- IEC 61158-2 (MBP)

Modbus RS485

The EIA/TIA-485 standard specifies two types of cable (A and B) for the bus line which can be used for every transmission rate. Cable type A is recommended.

Cable type	A
Characteristic impedance	135 to 165 Ω at a measuring frequency of 3 to 20 MHz
Cable capacitance	< 30 pF/m
Wire cross-section	> 0.34 mm^2 (22 AWG)
Cable type	Twisted pairs
Loop resistance	≤110 Ω/km
Signal damping	Max. 9 dB over the entire length of the cable cross-section
Shield	Copper braided shielding or braided shielding with foil shield. When grounding the cable shield, observe the grounding concept of the plant.

Current output 0/4 to 20 mA

Standard installation cable is sufficient.

Pulse/frequency/switch output

Standard installation cable is sufficient.

Double pulse output

Standard installation cable is sufficient.

Relay output

Standard installation cable is sufficient.

Current input 0/4 to 20 mA

Standard installation cable is sufficient.

Status input

Standard installation cable is sufficient.

Choice of connecting cable between the transmitter and sensor

Depends on the type of transmitter and the installation zones

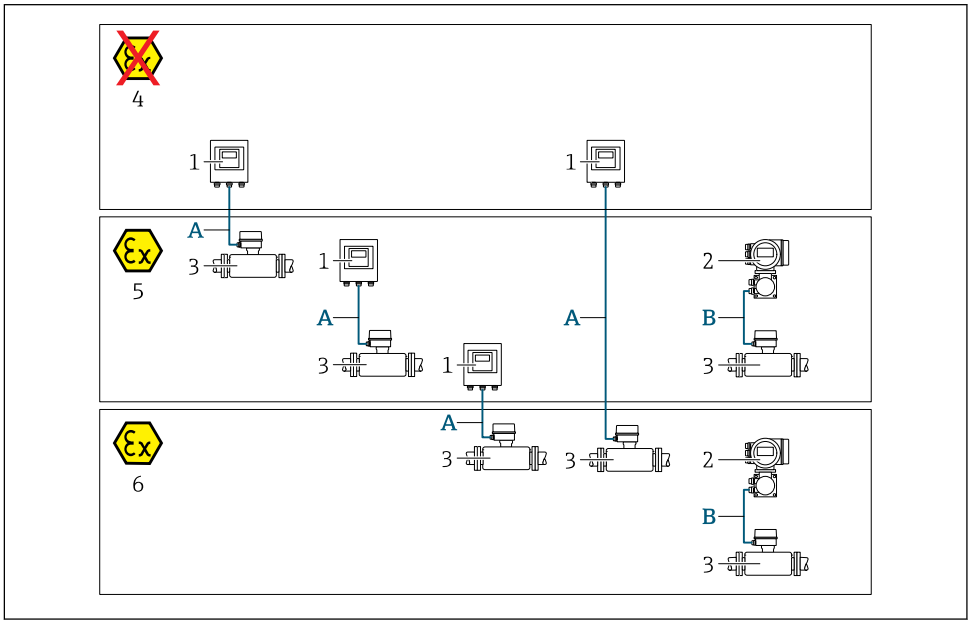

1 Proline 500 digital transmitter
2 Proline 500 transmitter
3 Promag sensor
4 Non-hazardous area
5 Hazardous area: Zone 2; Class I, Division 2
6 Hazardous area: Zone 1; Class I, Division 1
A Standard cable to 500 digital transmitter → 48
Transmitter installed in the non-hazardous area or hazardous area: Zone 2; Class I, Division 2 / sensor installed in the hazardous area: Zone 2; Class I, Division 2 or Zone 1; Class I, Division 1
B Signal cable to 500 transmitter → 49
Transmitter and sensor installed in the hazardous area: Zone 2; Class I, Division 2 oder Zone 1; Class I, Division 1

A: Connecting cable between sensor and transmitter: Proline 500 – digital

Standard cable

A standard cable with the following specifications can be used as the connecting cable.

Design	4 cores (2 pairs); uninsulated stranded CU wires; pair-stranded with common shield
Shielding	Tin-plated copper-braid, optical cover ≥ 85 %
Cable length	Maximum 300 m (1000 ft), see the following table.

Cross-section	**Cable lengths for use in**	
	Non-hazardous area, Hazardous area: Zone 2; Class I, Division 2	**Hazardous area: Zone 1; Class I, Division 1**
0.34 mm² (AWG 22)	80 m (270 ft)	50 m (165 ft)
0.50 mm² (AWG 20)	120 m (400 ft)	60 m (200 ft)
0.75 mm² (AWG 18)	180 m (600 ft)	90 m (300 ft)
1.00 mm² (AWG 17)	240 m (800 ft)	120 m (400 ft)

Cross-section	Cable lengths for use in	
	Non-hazardous area, Hazardous area: Zone 2; Class I, Division 2	Hazardous area: Zone 1; Class I, Division 1
1.50 mm² (AWG 15)	300 m (1 000 ft)	180 m (600 ft)
2.50 mm² (AWG 13)	300 m (1 000 ft)	300 m (1 000 ft)

Optionally available connecting cable

Design	2 × 2 × 0.34 mm² (AWG 22) PVC cable [1] with common shield (2 pairs, uninsulated stranded CU wires; pair-stranded)
Flame resistance	According to DIN EN 60332-1-2
Oil-resistance	According to DIN EN 60811-2-1
Shielding	Tin-plated copper-braid, optical cover ≥ 85 %
Operating temperature	When mounted in a fixed position: −50 to +105 °C (−58 to +221 °F); when cable can move freely: −25 to +105 °C (−13 to +221 °F)
Available cable length	Fixed: 20 m (65 ft); variable: up to maximum 50 m (165 ft)

1) UV radiation can impair the cable outer sheath. Protect the cable from direct sunshine where possible.

B: Connecting cable between sensor and transmitter: Proline 500

Signal cable

Design	3 × 0.38 mm² (20 AWG) with common, braided copper shield (Ø ~ 9.5 mm (0.37 in)) and individual shielded cores
Conductor resistance	≤50 Ω/km (0.015 Ω/ft)
Capacitance: core/shield	≤420 pF/m (128 pF/ft)
Cable length (max.)	Depends on the medium conductivity, max. 200 m (656 ft)
Cable lengths (available for order)	5 m (15 ft), 10 m (32 ft), 20 m (65 ft) or variable length up to max. 200 m (656 ft)
Operating temperature	−20 to +80 °C (−4 to +176 °F)

Coil current cable

Design	3 × 0.75 mm² (18 AWG) with common, braided copper shield (Ø ~ 9 mm (0.35 in)) and individual shielded cores
Conductor resistance	≤37 Ω/km (0.011 Ω/ft)
Capacitance: core/core, shield grounded	≤120 pF/m (37 pF/ft)
Cable length (max.)	Depends on the medium conductivity, max. 200 m (656 ft)
Cable lengths (available for order)	5 m (15 ft), 10 m (32 ft), 20 m (65 ft) or variable length up to max. 200 m (656 ft)
Operating temperature	−20 to +80 °C (−4 to +176 °F)
Test voltage for cable insulation	≤ AC 1433 V rms 50/60 Hz or ≥ DC 2026 V

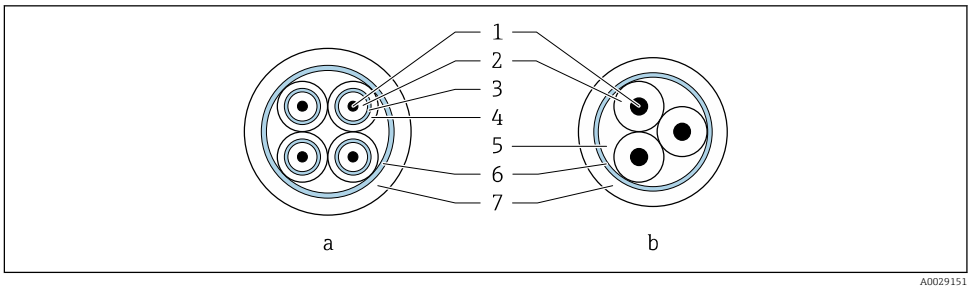

24 Cable cross-section

a Electrode cable
b Coil current cable
1 Core
2 Core insulation
3 Core shield
4 Core jacket
5 Core reinforcement
6 Cable shield
7 Outer jacket

Operation in zones of severe electrical interference

The measuring system meets the general safety requirements → 104 and EMC specifications → 59.

Grounding is by means of the ground terminal provided for the purpose inside the connection housing. The stripped and twisted lengths of cable shield to the ground terminal must be as short as possible.

Performance characteristics

Reference operating conditions

- Error limits following DIN EN 29104, in future ISO 20456
- Water, typically: +15 to +45 °C (+59 to +113 °F); 0.5 to 7 bar (73 to 101 psi)
- Data as indicated in the calibration protocol
- Accuracy based on accredited calibration rigs according to ISO 17025

Maximum measured error

o.r. = of reading

Error limits under reference operating conditions

Volume flow

- ±0.5 % o.r. ± 1 mm/s (0.04 in/s)
- Optional: ±0.2 % o.r. ± 2 mm/s (0.08 in/s)

Fluctuations in the supply voltage do not have any effect within the specified range.

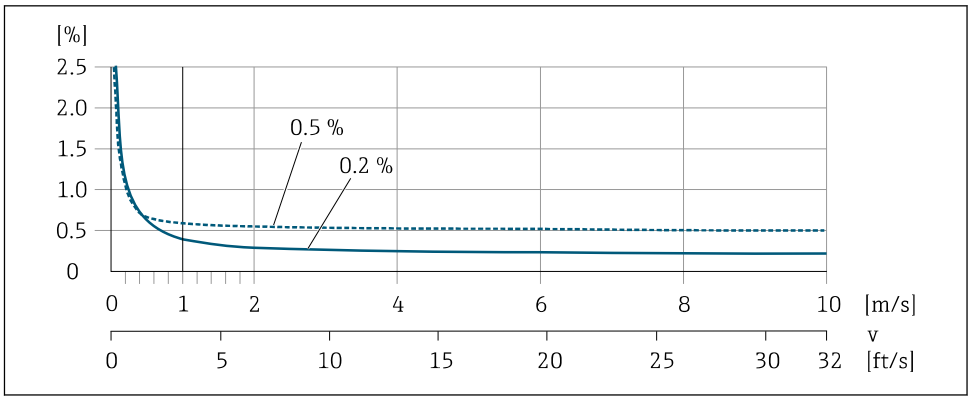

25 *Maximum measured error in % o.r.*

Electrical conductivity

Max. measured error not specified.

Accuracy of outputs

The outputs have the following base accuracy specifications.

Current output

Accuracy	±5 µA

Pulse/frequency output

o.r. = of reading

Accuracy	Max. ±50 ppm o.r. (over the entire ambient temperature range)

Repeatability

o.r. = of reading

Volume flow
Max. ±0.1 % o.r. ± 0.5 mm/s (0.02 in/s)

Electrical conductivity
Max. ±5 % o.r.

Influence of ambient temperature

Current output

Temperature coefficient	Max. 1 µA/°C

Pulse/frequency output

Temperature coefficient	No additional effect. Included in accuracy.

Installation

Mounting location

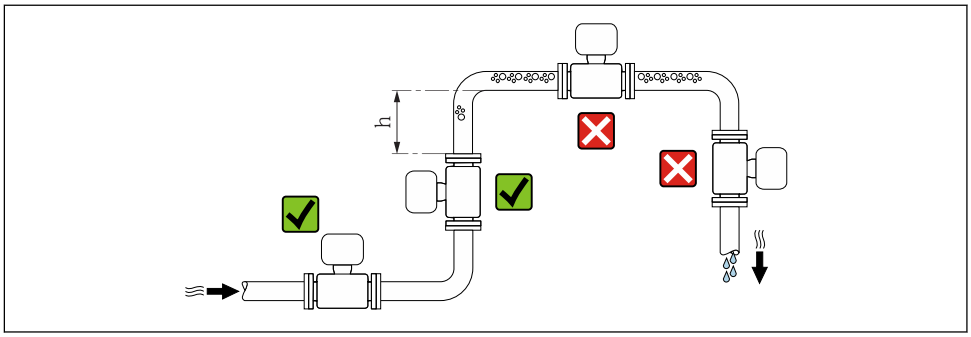

Preferably install the sensor in an ascending pipe, and ensure a sufficient distance to the next pipe elbow: h ≥ 2 × DN.

Installation in down pipes

Install a siphon with a vent valve downstream of the sensor in down pipes whose length h ≥ 5 m (16.4 ft). This precaution is to avoid low pressure and the consequent risk of damage to the measuring tube. This measure also prevents the system losing prime.

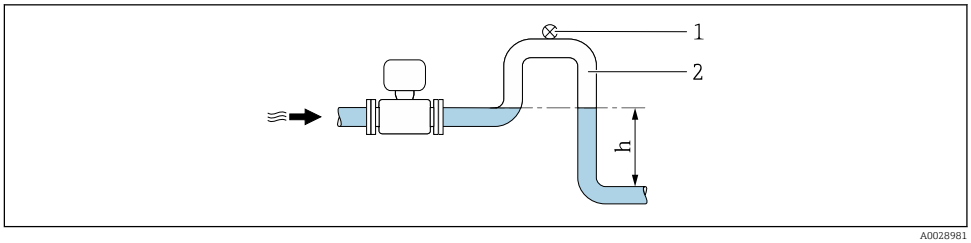

26 *Installation in a down pipe*

1 Vent valve
2 Pipe siphon
h Length of down pipe

Installation in partially filled pipes

A partially filled pipe with a gradient necessitates a drain-type configuration.

No inlet runs necessary with order code for "Design", option C, H, I

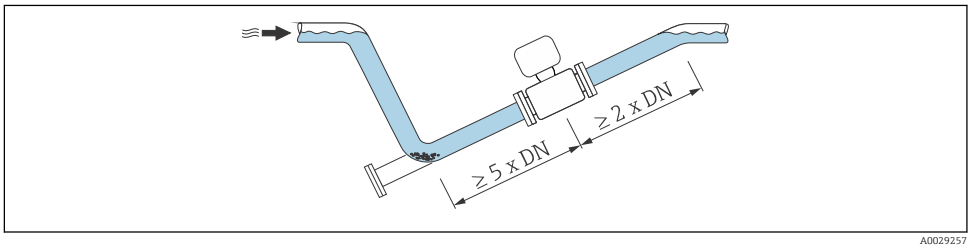

For heavy sensors DN ≥ 350 (14")

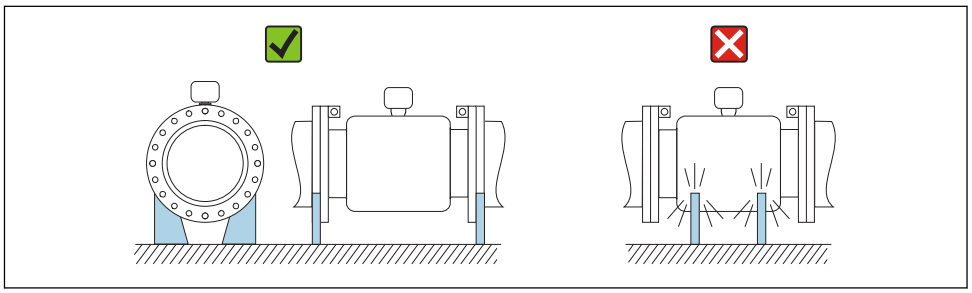

A0016276

Orientation

The direction of the arrow on the sensor nameplate helps you to install the sensor according to the flow direction (direction of medium flow through the piping).

Orientation			Recommendation
A	Vertical orientation	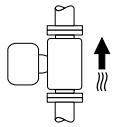 A0015591	✓✓
B	Horizontal orientation, transmitter at top	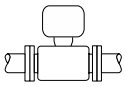 A0015589	✓✓ 1)
C	Horizontal orientation, transmitter at bottom	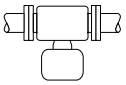 A0015590	✓✓ 2) 3) ✗ 4)
D	Horizontal orientation, transmitter at side	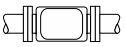 A0015592	✗

1) Applications with low process temperatures may decrease the ambient temperature. To maintain the minimum ambient temperature for the transmitter, this orientation is recommended.
2) Applications with high process temperatures may increase the ambient temperature. To maintain the maximum ambient temperature for the transmitter, this orientation is recommended.
3) To prevent the electronics module from overheating in the case of a sharp rise in temperature (e.g. CIP or SIP processes), install the device with the transmitter component pointing downwards.
4) With the empty pipe detection function switched on: empty pipe detection only works if the transmitter housing is pointing upwards.

Horizontal

- Ideally, the measuring electrode plane should be horizontal. This prevents brief insulation of the measuring electrodes by entrained air bubbles.
- Empty pipe detection only works if the transmitter housing is pointing upwards as otherwise there is no guarantee that the empty pipe detection function will actually respond to a partially filled or empty measuring tube.

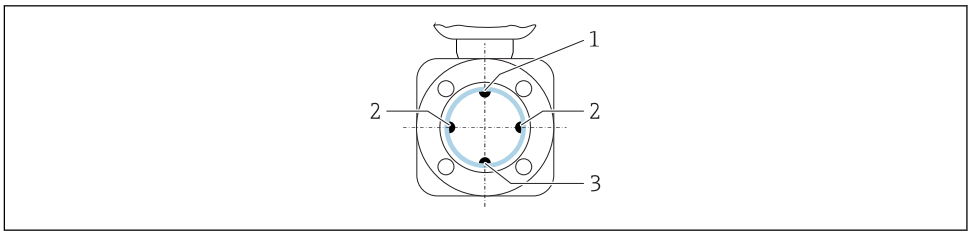

1 EPD electrode for empty pipe detection
2 Measuring electrodes for signal detection
3 Reference electrode for potential equalization

Measuring devices with tantalum or platinum electrodes can be ordered without an EPD electrode. In this case, empty pipe detection is performed via the measuring electrodes.

Inlet and outlet runs

If possible, install the sensor upstream from fittings such as valves, T-pieces or elbows.

Observe the following inlet and outlet runs to comply with accuracy specifications:

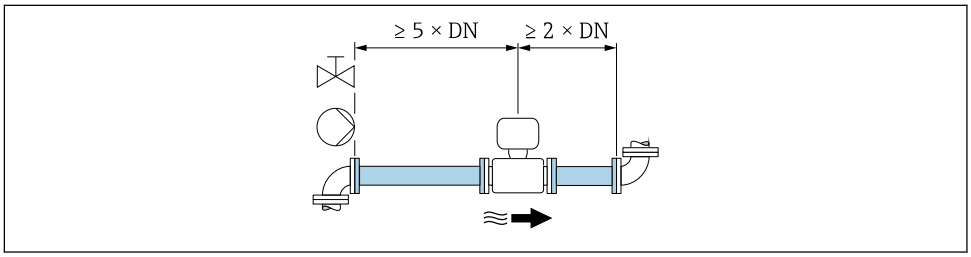

Adapters

Suitable adapters to DIN EN 545 (double-flange reducers) can be used to install the sensor in larger-diameter pipes. The resultant increase in the rate of flow improves measuring accuracy with very slow-moving fluids.

The nomogram shown here can be used to calculate the pressure loss caused by reducers and expanders:
- Calculate the ratio of the diameters d/D.
- From the nomogram read off the pressure loss as a function of flow velocity (downstream from the reduction) and the d/D ratio.

The nomogram only applies to liquids with a viscosity similar to that of water.

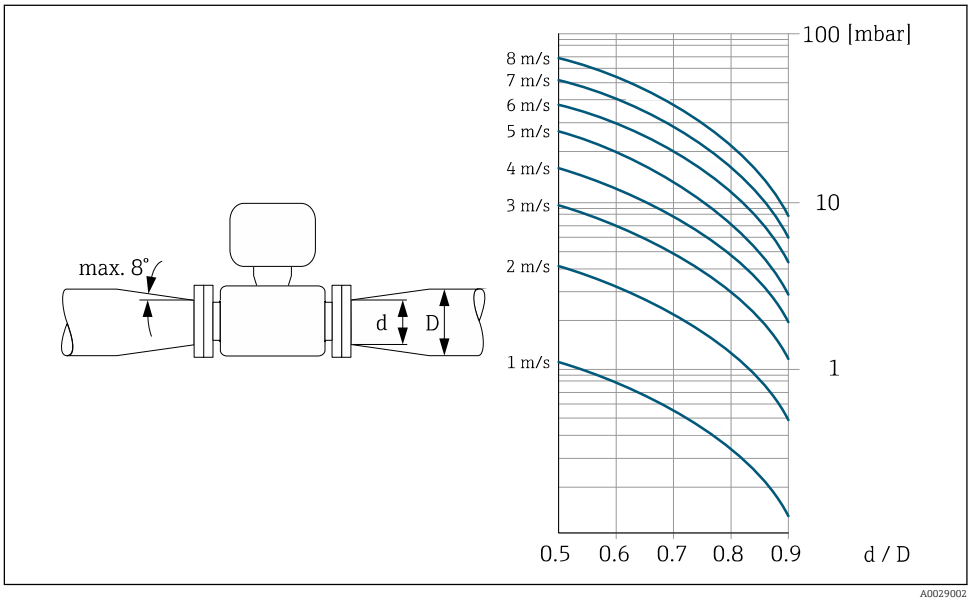

Length of connecting cable

Proline 500 – digital transmitter
Lengths of connecting cable → 48

Proline 500 transmitter
Max. 200 m (650 ft)

To obtain correct measurement results, observe the permitted connecting cable length of L_{max}. This length is determined by the conductivity of the fluid. If measuring liquids in general: 5 µS/cm

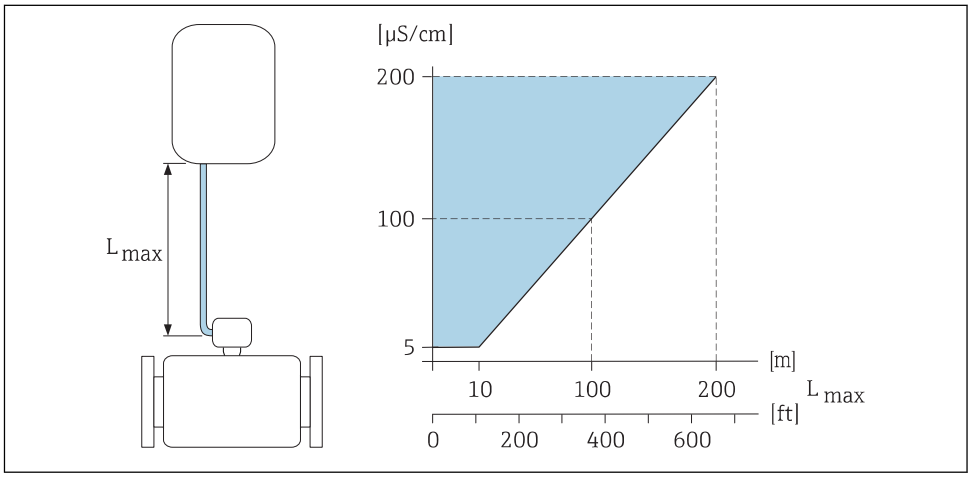

27 *Permitted length of connecting cable*

Colored area = permitted range
L_{max} = length of connecting cable in [m] ([ft])
[µS/cm] = fluid conductivity

Mounting the transmitter housing

Proline 500 – digital transmitter

Post mounting

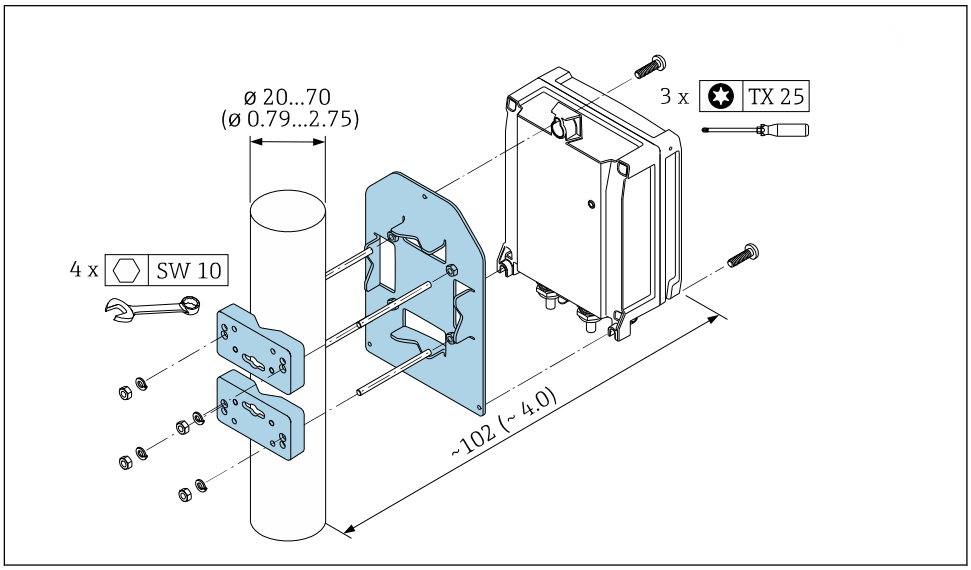

28 *Engineering unit mm (in)*

Wall mounting

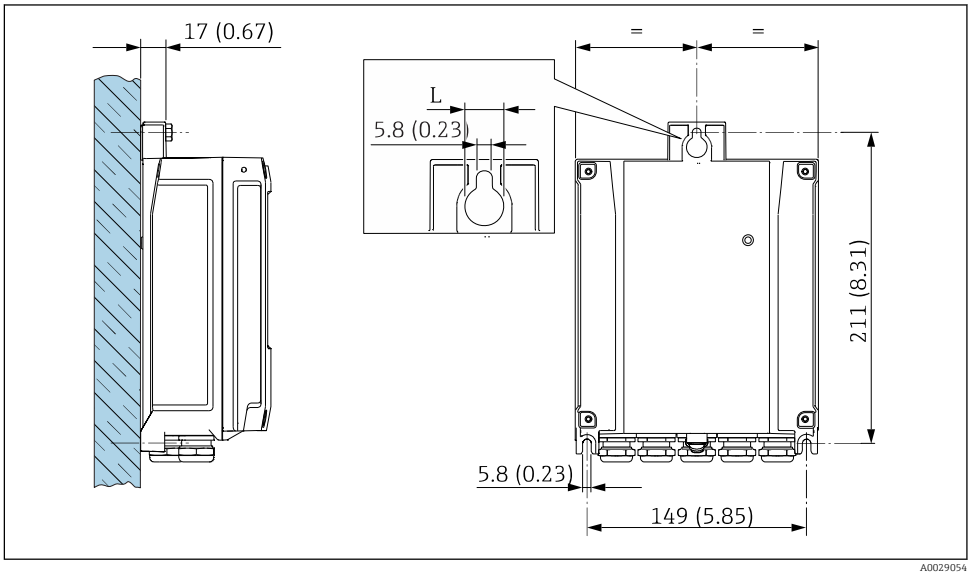

29 *Engineering unit mm (in)*

L Depends on order code for "Transmitter housing"

Order code for "Transmitter housing"
- Option **A**, aluminum coated: L =14 mm (0.55 in)
- Option **D**, polycarbonate: L = 13 mm (0.51 in)

Proline 500 transmitter

Post mounting

⚠ WARNING

Order code for "Transmitter housing", option L "Cast, stainless": cast transmitters are very heavy.

They are unstable if they are not mounted on a secure, fixed post.

► Only mount the transmitter on a secure, fixed post on a stable surface.

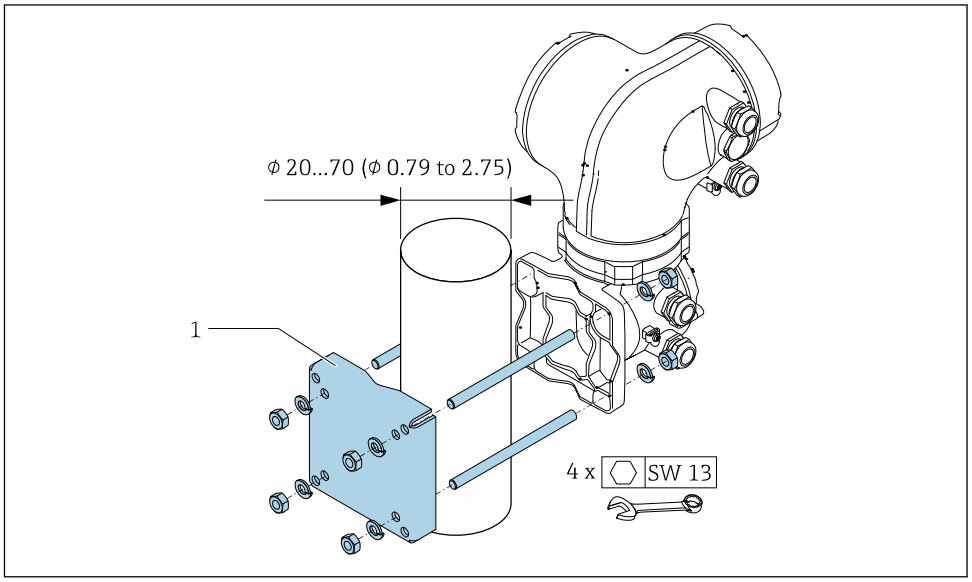

30 *Engineering unit mm (in)*

Wall mounting

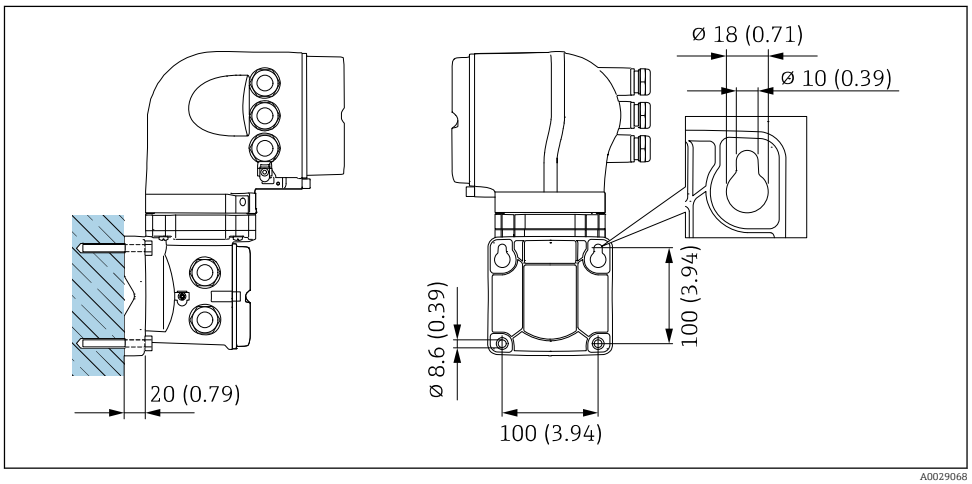

31 *Engineering unit mm (in)*

Special mounting instructions

Protective cover

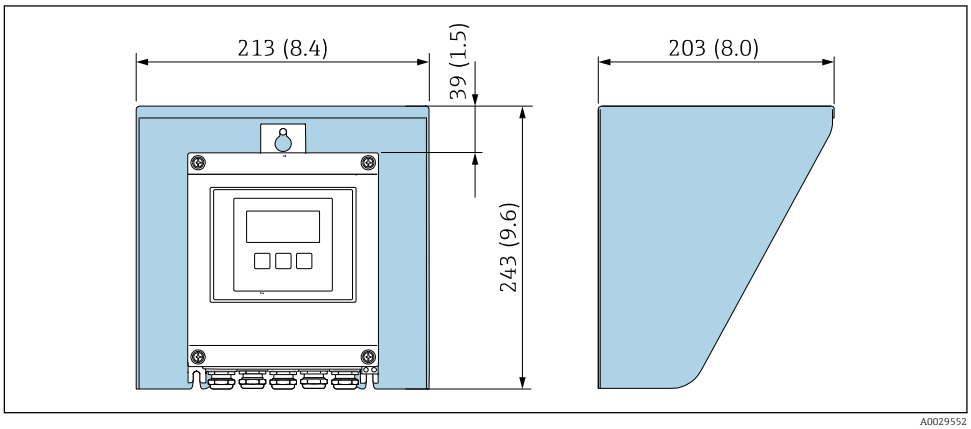

32 *Weather protection cover for Proline 500 – digital*

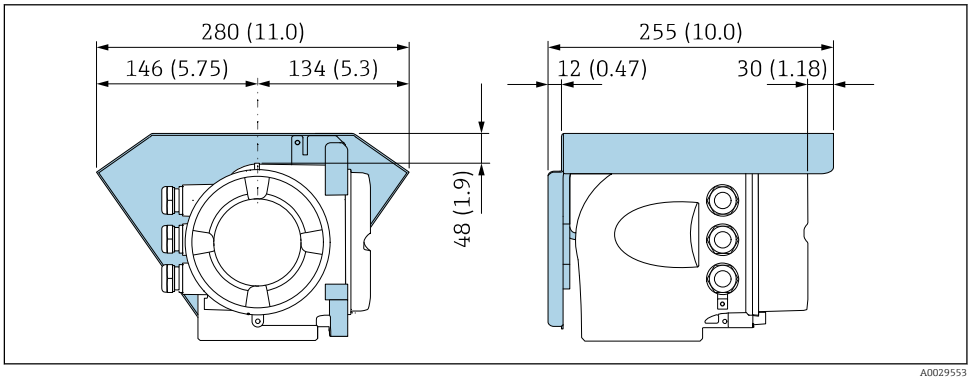

33 *Weather protection cover for Proline 500*

Environment

Ambient temperature range

Transmitter	▪ Standard: −40 to +60 °C (−40 to +140 °F) ▪ Optional: −50 to +60 °C (−58 to +140 °F) (order code for "Test, certificate", option **JN** "Ambient temperature of transmitter −50 °C (−58 °F)")
Local display	−20 to +60 °C (−4 to +140 °F), the readability of the display may be impaired at temperatures outside the temperature range.
Sensor	▪ Process connection material, carbon steel: −10 to +60 °C (+14 to +140 °F) ▪ Process connection material, stainless steel: −40 to +60 °C (−40 to +140 °F) Mount the transmitter separately from the sensor if both the ambient and fluid temperatures are high.
Liner	Do not exceed or fall below the permitted temperature range of the liner .

If operating outdoors:
- Install the measuring device in a shady location.
- Avoid direct sunlight, particularly in warm climatic regions.
- Avoid direct exposure to weather conditions.

Storage temperature

The storage temperature corresponds to the operating temperature range of the transmitter and the sensor → 58.

- Protect the measuring device against direct sunlight during storage in order to avoid unacceptably high surface temperatures.
- Select a storage location where moisture cannot collect in the measuring device as fungus or bacteria infestation can damage the liner.
- If protection caps or protective covers are mounted these should never be removed before installing the measuring device.

Degree of protection

Transmitter
- As standard: IP66/67, type 4X enclosure
- When housing is open: IP20, type 1 enclosure
- Display module: IP20, type 1 enclosure

Sensor
As standard: IP66/67, type 4X enclosure

External WLAN antenna
IP67

Vibration- and shock-resistance

Vibration sinusoidal, in accordance with IEC 60068-2-6

Order code for "Sensor junction housing", option L "Cast, stainless" and order code for "Sensor option", option CG "Extended neck for insulation"
- 2 to 8.4 Hz, 3.5 mm peak
- 8.4 to 2 000 Hz, 1 g peak

Order code for "Sensor connection housing", option A "Alu, coated"
- 2 to 8.4 Hz, 7.5 mm peak
- 8.4 to 2 000 Hz, 2 g peak

Vibration broad-band random, according to IEC 60068-2-64

Order code for "Sensor junction housing", option L "Cast, stainless" and order code for "Sensor option", option CG "Extended neck for insulation"
- 10 to 200 Hz, 0.003 g^2/Hz
- 200 to 2 000 Hz, 0.001 g^2/Hz
- Total: 1.54 g rms

Order code for "Sensor connection housing", option A "Alu, coated"
- 10 to 200 Hz, 0.01 g^2/Hz
- 200 to 2 000 Hz, 0.003 g^2/Hz
- Total: 2.70 g rms

Shock half-sine, according to IEC 60068-2-27

- Order code for "Sensor junction housing", option L "Cast, stainless" and order code for "Sensor option", option CG "Extended neck for insulation"
  6 ms 30 g
- Order code for "Sensor connection housing", option A "Alu, coated"
  6 ms 50 g

Rough handling shocks according to IEC 60068-2-31

Mechanical load

- Protect the transmitter housing against mechanical effects, such as shock or impact.
- Never use the transmitter housing as a ladder or climbing aid.

Electromagnetic compatibility (EMC)

- As per IEC/EN 61326 and NAMUR Recommendation 21 (NE 21)
- Device version with PROFIBUS DP: Complies with emission limits for industry as per EN 50170 Volume 2, IEC 61784

The following applies for PROFIBUS DP: If baud rates > 1.5 MBaud, an EMC cable entry must be used and the cable shield must continue as far as the terminal wherever possible.

Details are provided in the Declaration of Conformity.

Process

Medium temperature range

- −20 to +150 °C (−4 to +302 °F) for PFA, DN 25 to 200 (1 to 8")
- −20 to +180 °C (−4 to +356 °F) for PFA high-temperature, DN 25 to 200 (1 to 8")
- −40 to +130 °C (−40 to +266 °F) for PTFE, DN 15 to 600 (½ to 24")

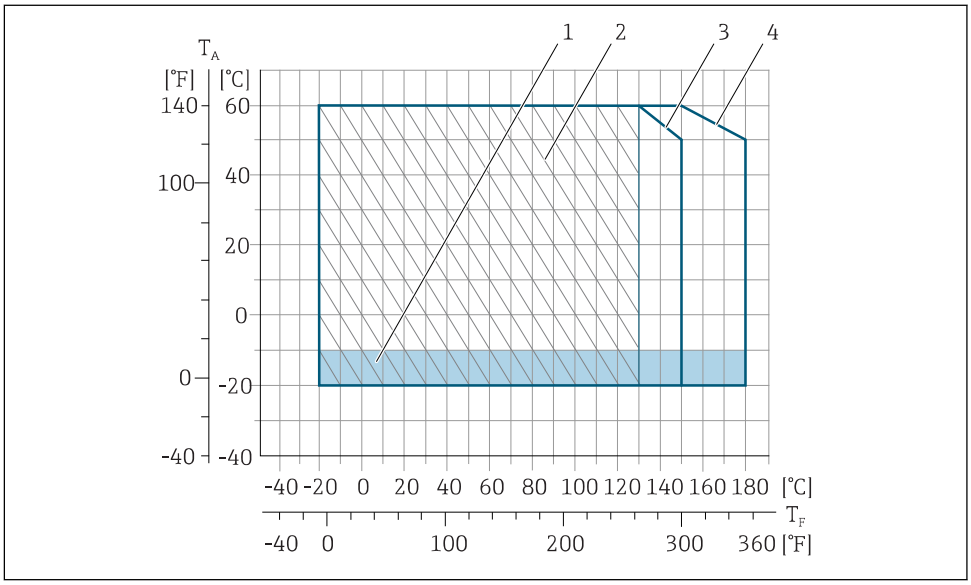

34 *PFA*

T_A *Ambient temperature*
T_F *Medium temperature*
1 *Colored area: the ambient temperature range −10 to −20 °C (+14 to −4 °F) applies to stainless flanges only*
2 *Hatched area: harsh environment only for medium temperature range −20 to +130 °C (−4 to +266 °F)*
3 *−20 to +150 °C (−4 to +302 °F) for PFA, DN 25 to 200 (1 to 8")*
4 *−20 to +180 °C (−4 to +356 °F) for PFA high-temperature, DN 25 to 200 (1 to 8")*

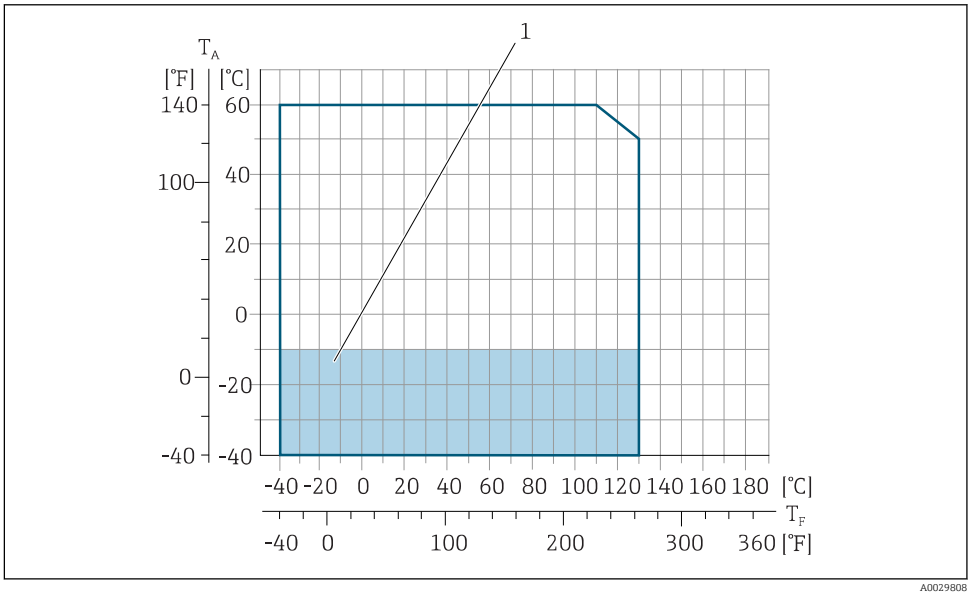

35 *PTFE*

T_A *Ambient temperature*
T_F *Medium temperature*
1 *Colored area: the ambient temperature range of −10 to −40 °C (+14 to −40 °F) applies to stainless flanges only*

Conductivity

≥ 5 µS/cm for liquids in general.

Proline 500
The necessary minimum conductivity also depends on the cable length → 55.

Pressure-temperature ratings

The following pressure/temperature diagrams apply to all pressure-bearing parts of the device and not just the process connection. The diagrams show the maximum permissible medium pressure depending on the specific medium temperature.

Process connection: flange according to EN 1092-1 (DIN 2501)

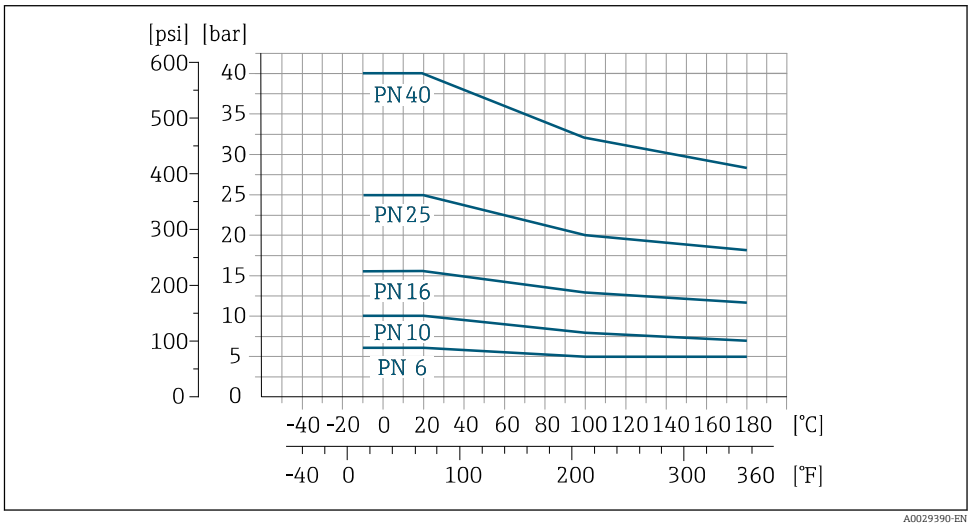

36 *Process connection material: carbon steel, FE410WB/S235JRG2; Alloy C22, 2.4602 (UNS N06022)*

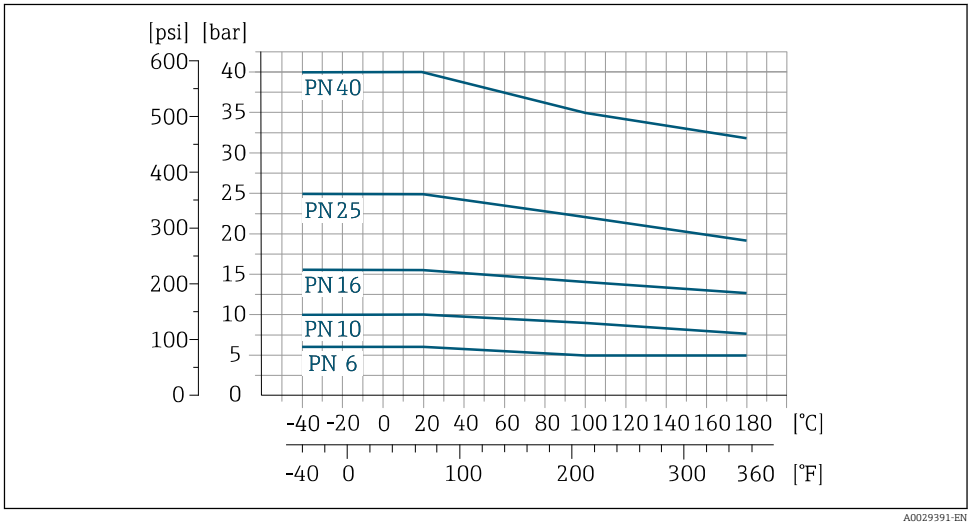

37 *Process connection material: stainless steel, 1.4571*

Process connection: flange according to ASME B16.5

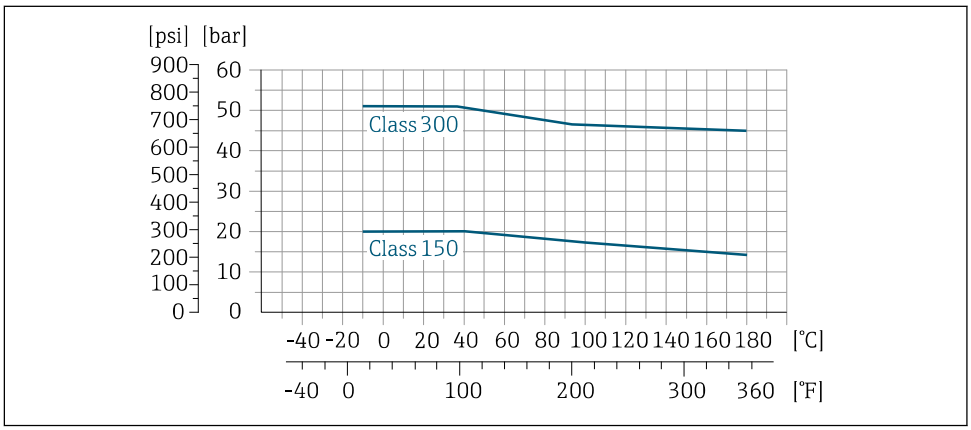

38 Process connection material: carbon steel, A105

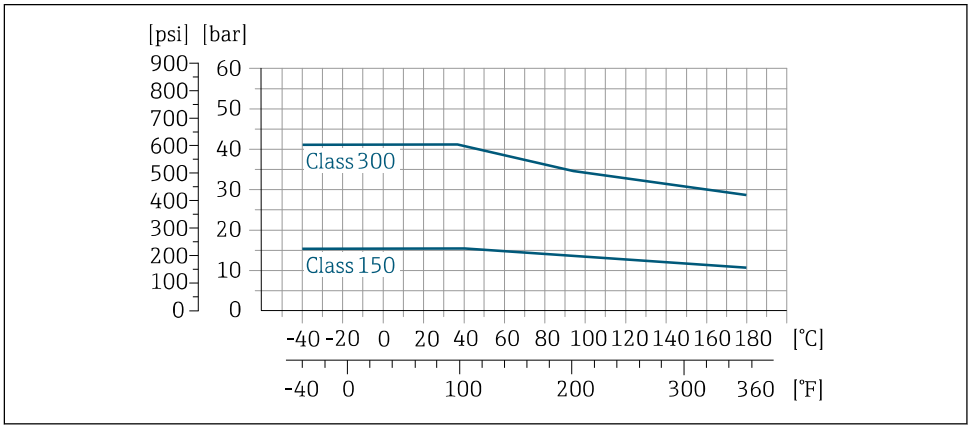

39 Process connection material: stainless steel, F316L

Process connection: flange according to JIS B2220

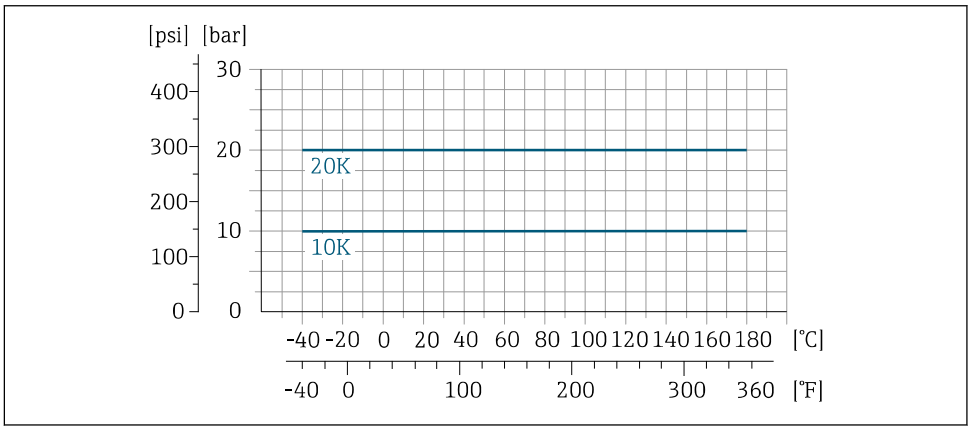

40 Process connection material: stainless steel, F316L; carbon steel, S235JRG2/HII

Process connection: flange according to AS 2129 (Table E) or AS 4087 (PN 16)

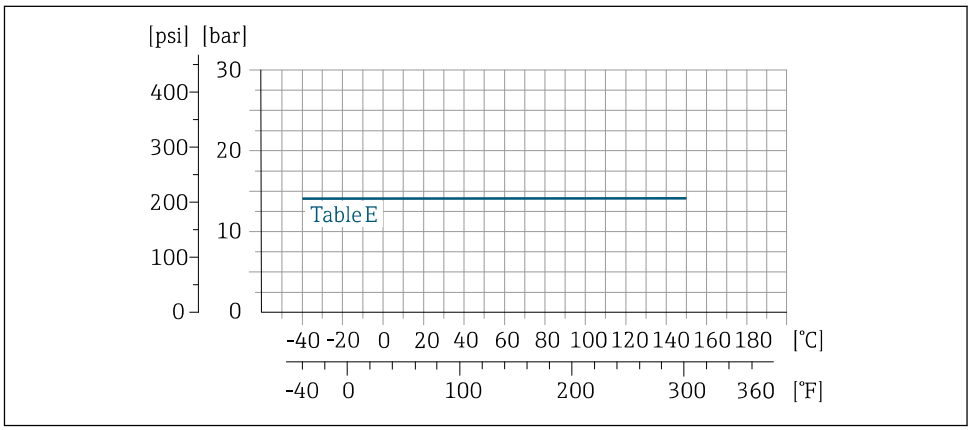

41 *Process connection material: carbon steel, A105/S235JRG2/S275JR*

Pressure tightness

Liner: PFA

Nominal diameter		Limit values for absolute pressure in [mbar] ([psi]) for medium temperatures:		
[mm]	[in]	+25 °C (+77 °F)	+80 °C (+176 °F)	+100 to +180 °C (+212 to +356 °F)
25	1	0 (0)	0 (0)	0 (0)
32	–	0 (0)	0 (0)	0 (0)
40	1 ½	0 (0)	0 (0)	0 (0)
50	2	0 (0)	0 (0)	0 (0)
65	–	0 (0)	0 (0)	0 (0)
80	3	0 (0)	0 (0)	0 (0)
100	4	0 (0)	0 (0)	0 (0)
125	–	0 (0)	0 (0)	0 (0)
150	6	0 (0)	0 (0)	0 (0)
200	8	0 (0)	0 (0)	0 (0)

Liner: PTFE

Nominal diameter		Limit values for absolute pressure in [mbar] ([psi]) for medium temperatures:			
[mm]	[in]	+25 °C (+77 °F)	+80 °C (+176 °F)	+100 °C (+212 °F)	+130 °C (+266 °F)
15	½	0 (0)	0 (0)	0 (0)	100 (1.45)
25	1	0 (0)	0 (0)	0 (0)	100 (1.45)
32	–	0 (0)	0 (0)	0 (0)	100 (1.45)
40	1 ½	0 (0)	0 (0)	0 (0)	100 (1.45)
50	2	0 (0)	0 (0)	0 (0)	100 (1.45)
65	–	0 (0)	–	40 (0.58)	130 (1.89)
80	3	0 (0)	–	40 (0.58)	130 (1.89)
100	4	0 (0)	–	135 (1.96)	170 (2.47)
125	–	135 (1.96)	–	240 (3.48)	385 (5.58)
150	6	135 (1.96)	–	240 (3.48)	385 (5.58)
200	8	200 (2.90)	–	290 (4.21)	410 (5.95)
250	10	330 (4.79)	–	400 (5.80)	530 (7.69)

Nominal diameter		Limit values for absolute pressure in [mbar] ([psi]) for medium temperatures:			
[mm]	[in]	+25 °C (+77 °F)	+80 °C (+176 °F)	+100 °C (+212 °F)	+130 °C (+266 °F)
300	12	400 (5.80)	–	500 (7.25)	630 (9.14)
350	14	470 (6.82)	–	600 (8.70)	730 (10.6)
400	16	540 (7.83)	–	670 (9.72)	800 (11.6)
450	18	No negative pressure permitted!			
500	20				
600	24				

Flow limit

The diameter of the pipe and the flow rate determine the nominal diameter of the sensor. The optimum velocity of flow is between 2 to 3 m/s (6.56 to 9.84 ft/s). Also match the velocity of flow (v) to the physical properties of the fluid:
- v < 2 m/s (6.56 ft/s): for abrasive fluids (e.g. potter's clay, lime milk, ore slurry)
- v > 2 m/s (6.56 ft/s): for fluids producing buildup (e.g. wastewater sludge)

A necessary increase in the flow velocity can be achieved by reducing the sensor nominal diameter.

For an overview of the full scale values for the measuring range, see the "Measuring range" section

Pressure loss

- No pressure loss occurs if the sensor is installed in a pipe with the same nominal diameter.
- Pressure losses for configurations incorporating adapters according to DIN EN 545 → 54

System pressure

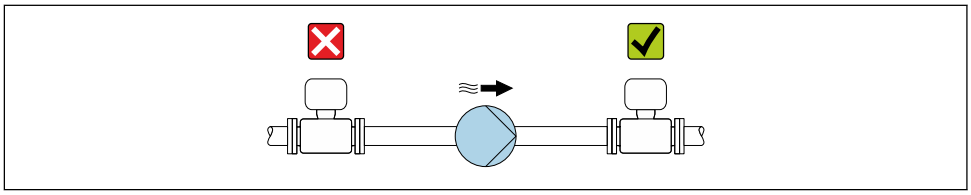

A0028777

Never install the sensor on the pump suction side in order to avoid the risk of low pressure, and thus damage to the liner.

Furthermore, install pulse dampers if reciprocating, diaphragm or peristaltic pumps are used.

- Information on the liner's resistance to partial vacuum
- Information on the shock resistance of the measuring system
- Information on the vibration resistance of the measuring system

Thermal insulation

If process fluids are very hot, it is necessary to insulate pipes in order to reduce energy loss and to prevent individuals from accidentally coming into contact with hot pipes. Please observe the applicable standards and guidelines for insulating pipes.

A housing support/an extended neck is used for heat dissipation:
- Devices with the order code for "Lining", option **B** "PFA high-temperature" always come with a housing support.
- In the case of all other devices, a housing support can be ordered via the order code for "Sensor option", option **CG** "Sensor extended neck".

⚠ WARNING

Electronics overheating on account of thermal insulation!

▶ The housing support is used for heat dissipation and must be completely free (i.e. uncovered). At the very maximum, the sensor insulation may extend as far as the upper edge of the two sensor half-shells.

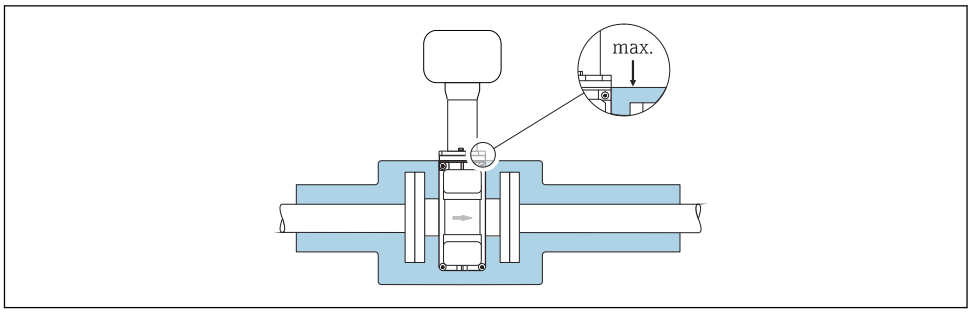

A0031216

Vibrations

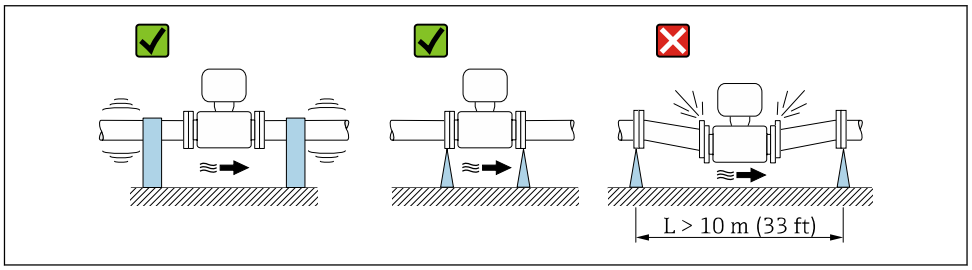

A0029004

42 *Measures to prevent vibration of the device*

In the event of very strong vibrations, the pipe and sensor must be supported and fixed.

- Information on the shock resistance of the measuring system
- Information on the vibration resistance of the measuring system

Magnetism and static electricity

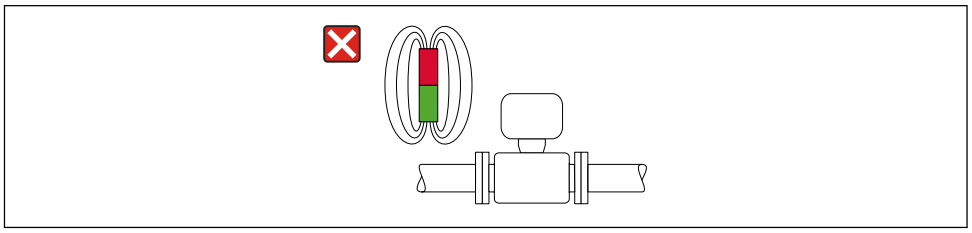

A0042152

43 *Avoid magnetic fields*

Mechanical construction

Dimensions in SI units

Housing of Proline 500 – digital transmitter

Non-hazardous area or hazardous area: Zone 2; Class I, Division 2

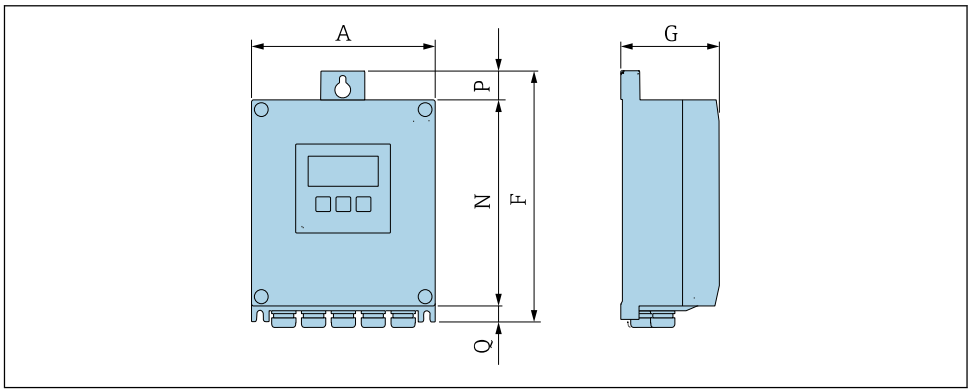

A0033789

Order code for "Transmitter housing", option A "Aluminum, coated" and order code for "Integrated ISEM electronics", option A "Sensor"

A [mm]	F [mm]	G [mm]	N [mm]	P [mm]	Q [mm]
167	232	80	187	24	21

Order code for "Transmitter housing", option D "Polycarbonate" and order code for "Integrated ISEM electronics", option A "Sensor"

A [mm]	F [mm]	G [mm]	N [mm]	P [mm]	Q [mm]
177	234	90	197	17	22

Housing of Proline 500 transmitter

Hazardous area: Zone 2; Class I, Division 2 or Zone 1; Class I, Division 1

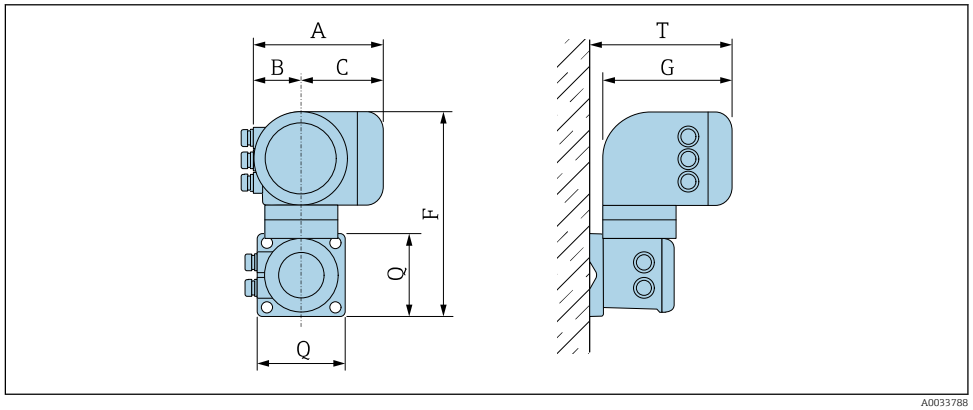

Order code for "Transmitter housing", option A "Aluminum, coated" and order code for "Integrated ISEM electronics", option B "Transmitter"

A [mm]	B [mm]	C [mm]	F [mm]	G [mm]	Q [mm]	T [mm]
188	85	103	318	217	130	239

Order code for "Transmitter housing", option L "Cast, stainless" and order code for "Integrated ISEM electronics", option B "Transmitter"

A [mm]	B [mm]	C [mm]	F [mm]	G [mm]	Q [mm]	T [mm]
188	85	103	295	217	130	239

Sensor connection housing

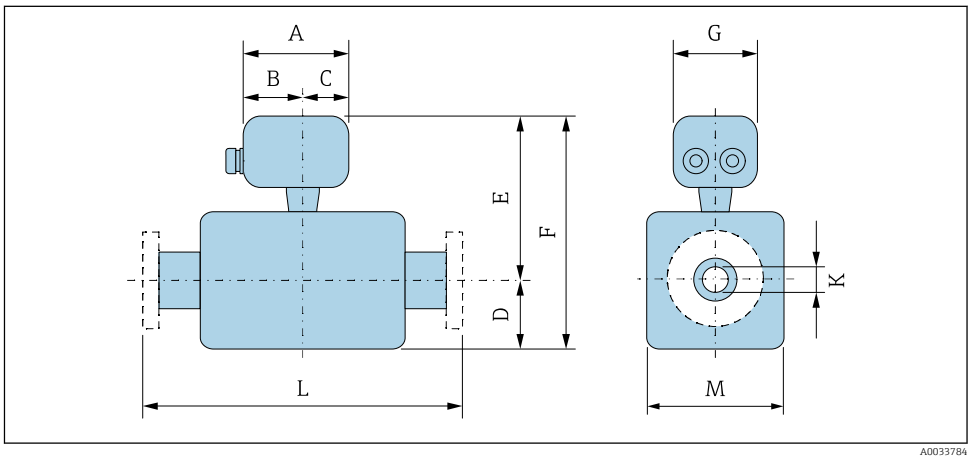

Order code for "Sensor connection housing", option A "Aluminum, coated"

DN [mm]	A [mm]	B [mm]	C [mm]	D [mm]	E [1] [mm]	F [1] [mm]	G [mm]	K [mm]	L [mm]	M [mm]
15	148	94	54	84	197	281	136	[2]	[3]	120
25	148	94	54	84	197	281	136	[2]	[3]	120
32	148	94	54	84	197	281	136	[2]	[3]	120
40	148	94	54	84	197	281	136	[2]	[3]	120
50	148	94	54	84	197	281	136	[2]	[3]	120
65	148	94	54	109	222	331	136	[2]	[3]	180
80	148	94	54	109	222	331	136	[2]	[3]	180
100	148	94	54	109	222	331	136	[2]	[3]	180
125	148	94	54	150	262	412	136	[2]	[3]	260
150	148	94	54	150	262	412	136	[2]	[3]	260
200	148	94	54	180	287	467	136	[2]	[3]	324
250	148	94	54	205	312	517	136	[2]	[3]	400
300	148	94	54	230	337	567	136	[2]	[3]	460
350	148	94	54	282	399	681	136	[2]	[3]	564
400	148	94	54	308	425	733	136	[2]	[3]	616
450	148	94	54	333	450	783	136	[2]	[3]	666
500	148	94	54	359	476	835	136	[2]	[3]	717
600	148	94	54	411	528	939	136	[2]	[3]	821

1) With order code for "Sensor option", option CG "Sensor extended neck for insulation" or order code for "Liner", option B "PFA high temperature": values + 110 mm
2) Depends on the liner → 🖹 84
3) Total length is independent of the process connections. Length according to DVGW (German Technical and Scientific Association for Gas and Water).→ 🖹 69

Order code for "Sensor connection housing", option L "Cast, stainless"

DN [mm]	A [mm]	B [mm]	C [mm]	D [mm]	E [mm]	F [mm]	G [mm]	K [mm]	L [mm]	M [mm]
15	145	86	59	84	235	319	136	1)	2)	120
25	145	86	59	84	235	319	136	1)	2)	120
32	145	86	59	84	235	319	136	1)	2)	120
40	145	86	59	84	235	319	136	1)	2)	120
50	145	86	59	84	235	319	136	1)	2)	120
65	145	86	59	109	260	369	136	1)	2)	180
80	145	86	59	109	260	369	136	1)	2)	180
100	145	86	59	109	260	369	136	1)	2)	180
125	145	86	59	150	300	450	136	1)	2)	260
150	145	86	59	150	300	450	136	1)	2)	260
200	145	86	59	180	325	505	136	1)	2)	324
250	145	86	59	205	350	555	136	1)	2)	400
300	145	86	59	230	375	605	136	1)	2)	460
350	145	86	59	282	437	719	136	1)	2)	564
400	145	86	59	308	463	771	136	1)	2)	616
450	145	86	59	333	488	821	136	1)	2)	666
500	145	86	59	359	514	873	136	1)	2)	717
600	145	86	59	411	566	977	136	1)	2)	821

1) Depends on the liner → 🖹 84
2) Total length is independent of the process connections. Length according to DVGW (German Technical and Scientific Association for Gas and Water).→ 🖹 69

Flange connections

Flange

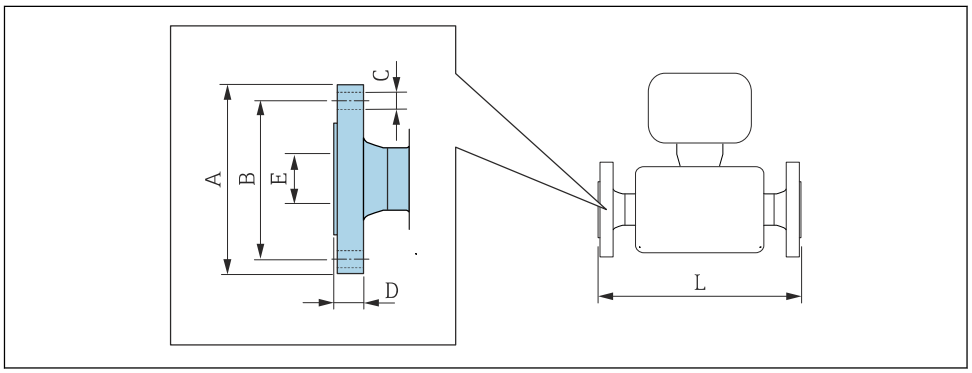

A0015621

Flange in accordance with EN 1092-1 (DIN 2501 / DIN 2512N): PN 10 **P245GH (1.0352):** *order code for "Process connection", option* **D2K** **1.4404 (F316/F316L):** *order code for "Process connection", option* **D2S**						
DN [mm]	**A [mm]**	**B [mm]**	**C [mm]**	**D [mm]**	**E [mm]**	**L [1] [mm]**
200	340	295	8 × Ø22	26	220.9	350
250	395	350	12 × Ø22	28	275.5	450
300	445	400	12 × Ø22	28	326.5	500
350	505	460	16 × Ø22	26	346	550
400	565	515	16 × Ø26	26	396	600
450	615	565	20 × Ø26	28	447	650
500	670	620	20 × Ø26	28	498	650
600	780	725	20 × Ø30	30	600	780
Surface roughness (flange): EN 1092-1 Form B1 (DIN 2526 Form C), Ra 6.3 to 12.5 µm						

1) Length according to DVGW (German Technical and Scientific Association for Gas and Water).

Flange in accordance with EN 1092-1 (DIN 2501 / DIN 2512N): PN 16 **P245GH (1.0352):** *order code for "Process connection", option* **D3K** **1.4404 (F316/F316L):** *order code for "Process connection", option* **D3S**						
DN [mm]	**A [mm]**	**B [mm]**	**C [mm]**	**D [mm]**	**E [mm]**	**L [1] [mm]**
65	185	145	8 × Ø18	20	77.1	200
80	200	160	8 × Ø18	20	89.9	200
100	220	180	8 × Ø18	22	115.3	250
125	250	210	8 × Ø18	24	141.3	250
150	285	240	8 × Ø22	24	170.2	300
200	340	295	12 × Ø22	26	220.9	350
250	405	355	12 × Ø26	32	275.7	450
300	460	410	12 × Ø26	32	326.5	500
350	520	470	16 × Ø26	30	346	550
400	580	525	16 × Ø30	32	396	600
500	715	650	20 × Ø33	36	498	650

Flange in accordance with EN 1092-1 (DIN 2501 / DIN 2512N): PN 16
P245GH (1.0352): *order code for "Process connection", option* **D3K**
1.4404 (F316/F316L): *order code for "Process connection", option* **D3S**

DN [mm]	A [mm]	B [mm]	C [mm]	D [mm]	E [mm]	L [1] [mm]
600	840	770	20 × Ø36	40	600	780
Surface roughness (flange): EN 1092-1 Form B1 (DIN 2526 Form C), Ra 6.3 to 12.5 µm						

1) Length according to DVGW (German Technical and Scientific Association for Gas and Water).

Flange in accordance with EN 1092-1 (DIN 2501 / DIN 2512N): PN 25
P245GH (1.0352): *order code for "Process connection", option* **D4K**
1.4404 (F316/F316L): *order code for "Process connection", option* **D4S**

DN [mm]	A [mm]	B [mm]	C [mm]	D [mm]	E [mm]	L [1] [mm]
200	360	310	12 × Ø26	32	220.9	350
250	425	370	12 × Ø30	36	275.7	450
300	485	430	16 × Ø30	40	326.5	500
350	555	490	16 × Ø33	38	346	550
400	620	550	16 × Ø36	40	396	600
500	730	660	20 × Ø36	48	498	650
600	845	770	20 × Ø39	48	600	780
Surface roughness (flange): EN 1092-1 Form B1 (DIN 2526 Form C), Ra 6.3 to 12.5 µm						

1) Length according to DVGW (German Technical and Scientific Association for Gas and Water).

Flange in accordance with EN 1092-1 (DIN 2501 / DIN 2512N): PN 40
P245GH (1.0352): *order code for "Process connection", option* **D5K**
1.4404 (F316/F316L): *order code for "Process connection", option* **D5S**

DN [mm]	A [mm]	B [mm]	C [mm]	D [mm]	E [mm]	L [1] [mm]
15	95	65	4 × Ø14	14	22.2	200
25	115	85	4 × Ø14	16	34.2	200
32	140	100	4 × Ø18	18	43	200
40	150	110	4 × Ø18	18	49.1	200
50	165	125	4 × Ø18	20	61.3	200
65	185	145	8 × Ø18	24	77.1	200
80	200	160	8 × Ø18	26	89.9	200
100	235	190	8 × Ø22	26	115.3	250
125	270	220	8 × Ø26	28	141.3	250
150	300	250	8 × Ø26	30	170.2	300
Surface roughness (flange): EN 1092-1 Form B1 (DIN 2526 Form C), Ra 6.3 to 12.5 µm						

1) Length according to DVGW (German Technical and Scientific Association for Gas and Water).

Flange according to ASME B16.5, Class 150
A 105: *order code for "Process connection", option* **A1K**
1.4404 (F316/F316L): *order code for "Process connection", option* **A1S**

DN [mm]	A [mm]	B [mm]	C [mm]	D [mm]	E [mm]	L [1)] [mm]
15	88.9	60.5	4 × Ø16	9.6	22.3	200
25	108	79.2	4 × Ø16	12.6	34.2	200
40	127	98.6	4 × Ø16	15.9	49.1	200
50	152.4	120.7	4 × Ø19.1	17.5	61.3	200
80	190.5	152.4	4 × Ø19.1	22.3	89.9	200
100	228.6	190.5	8 × Ø19.1	22.3	115.3	250
150	279.4	241.3	8 × Ø22.4	23.8	170.2	300
200	342.9	298.5	8 × Ø22.4	26.8	220.9	350
250	406.4	362	12 × Ø25.4	29.6	275.7	450
300	482.6	431.8	12 × Ø25.4	30.2	326.5	500
350	535	476.3	12 × Ø28.6	35.4	346	550
400	595	539.8	16 × Ø28.6	37	396	600
450	635	577.9	16 × Ø31.8	40.1	447	650
500	700	635	20 × Ø31.8	43.3	498	650
600	815	749.3	20 × Ø34.9	48.1	600	780
Surface roughness (flange): Ra 6.3 to 12.5 µm						

1) Length according to DVGW (German Technical and Scientific Association for Gas and Water).

Flange according to ASME B16.5, Class 300
A 105: *order code for "Process connection", option* **A2K**
1.4404 (F316/F316L): *order code for "Process connection", option* **A2S**

DN [mm]	A [mm]	B [mm]	C [mm]	D [mm]	E [mm]	L [1)] [mm]
15	95.3	66.5	4 × Ø16	12.6	22.3	200
25	123.9	88.9	4 × Ø19.1	15.9	34.2	200
40	155.4	114.3	4 × Ø22.4	19	49.1	200
50	165.1	127	8 × Ø19.1	20.8	61.3	200
80	209.6	168.1	8 × Ø22.4	26.8	89.9	200
100	254	200.2	8 × Ø22.4	30.2	115.3	250
150	317.5	269.7	12 × Ø22.4	35	170.2	300
Surface roughness (flange): Ra 6.3 to 12.5 µm						

1) Length according to DVGW (German Technical and Scientific Association for Gas and Water).

Flange according to JIS B2220, 10K
A 105/A350LF2: *order code for "Process connection", option* **N3K**
1.4404 (F316L): *order code for "Process connection", option* **N3S**

DN [mm]	A [mm]	B [mm]	C [mm]	D [mm]	E [mm]	L [1)] [mm]
50	155	120	4 × Ø19	16	61.1	200
65	175	140	4 × Ø19	18	77.1	200
80	185	150	8 × Ø19	18	90	200

Flange according to JIS B2220, 10K
A 105/A350LF2: *order code for "Process connection", option* **N3K**
1.4404 (F316L): *order code for "Process connection", option* **N3S**

DN [mm]	A [mm]	B [mm]	C [mm]	D [mm]	E [mm]	L [1] [mm]
100	210	175	8 × Ø19	18	115.4	250
125	250	210	8 × Ø23	20	141.2	250
150	280	240	8 × Ø23	22	169	300
200	330	290	12 × Ø23	22	220	350
250	400	355	12 × Ø25	24	274	450
300	445	400	16 × Ø25	24	325	500
Surface roughness (flange): Ra 6.3 to 12.5 µm						

1) Length according to DVGW (German Technical and Scientific Association for Gas and Water).

Flange according to JIS B2220, 20K
A 105/A350LF2: *order code for "Process connection", option* **N4K**
1.4404 (F316L): *order code for "Process connection", option* **N4S**

DN [mm]	A [mm]	B [mm]	C [mm]	D [mm]	E [mm]	L [1] [mm]
15	95	70	4 × Ø15	14	22.2	200
25	125	90	4 × Ø19	16	34.5	200
32	135	100	4 × Ø19	18	43.2	200
40	140	105	4 × Ø19	18	49.1	200
50	155	120	8 × Ø19	18	61.1	200
65	175	140	8 × Ø19	20	77.1	200
80	200	160	8 × Ø23	22	90	200
100	225	185	8 × Ø23	24	115.4	250
125	270	225	8 × Ø25	26	141.2	250
150	305	260	12 × Ø25	28	169	300
200	350	305	12 × Ø25	30	220	350
250	430	380	12 × Ø27	34	274	450
300	480	430	16 × Ø27	36	325	500
Surface roughness (flange): Ra 6.3 to 12.5 µm						

1) Length according to DVGW (German Technical and Scientific Association for Gas and Water).

Accessories

Protective cover

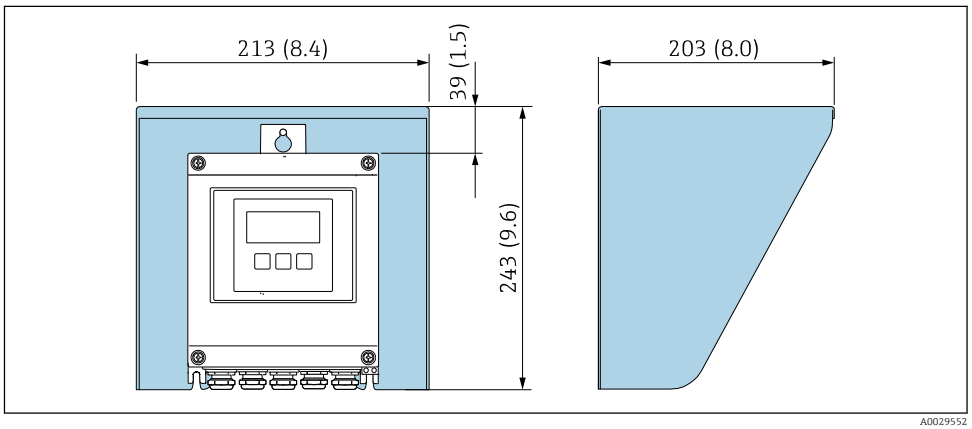

44 *Weather protection cover for Proline 500 – digital*

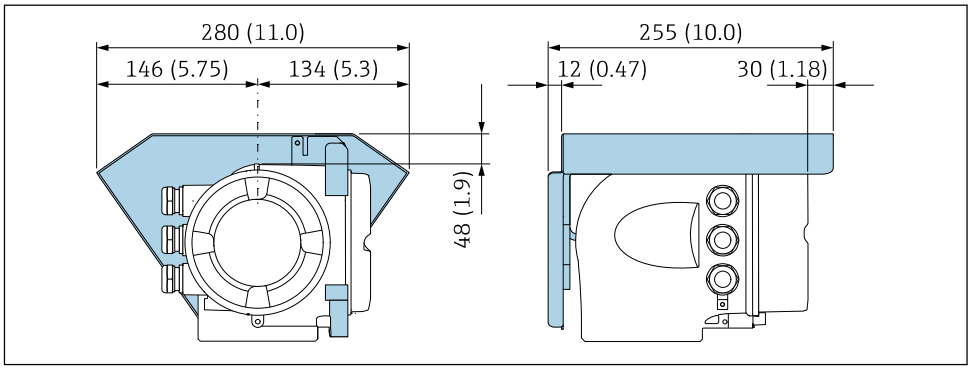

45 *Weather protection cover for Proline 500*

External WLAN antenna

The external WLAN antenna is not suitable for use in hygienic applications.

Proline 500 – digital

External WLAN antenna mounted on device

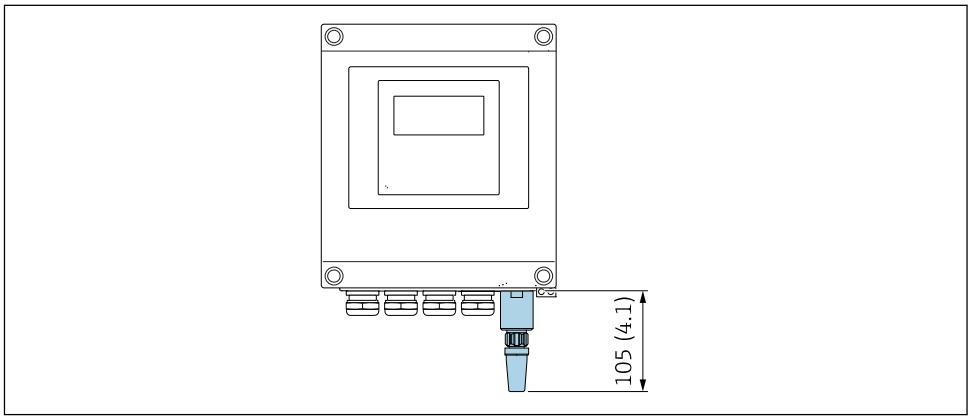

46 *Engineering unit mm (in)*

External WLAN antenna mounted with cable

The external WLAN antenna can be mounted separately from the transmitter if the transmission/ reception conditions at the transmitter mounting location are poor.

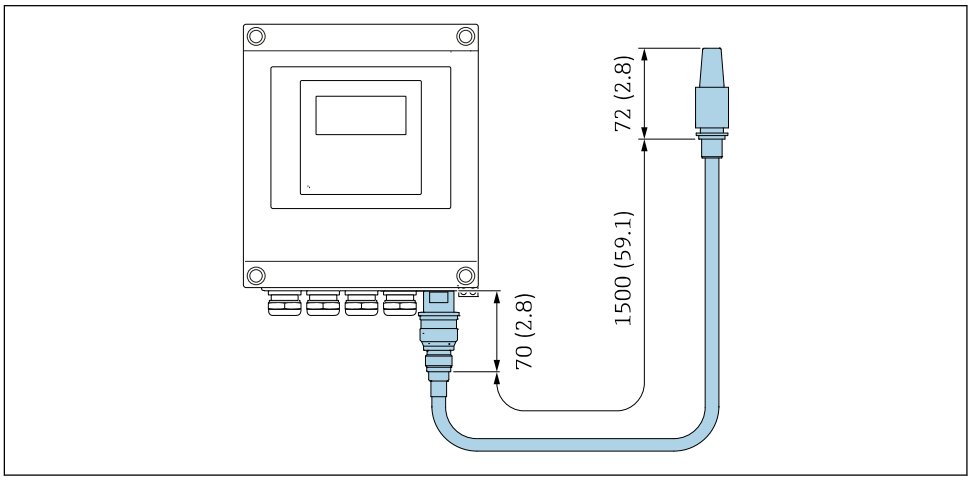

47 *Engineering unit mm (in)*

Proline 500

External WLAN antenna mounted on device

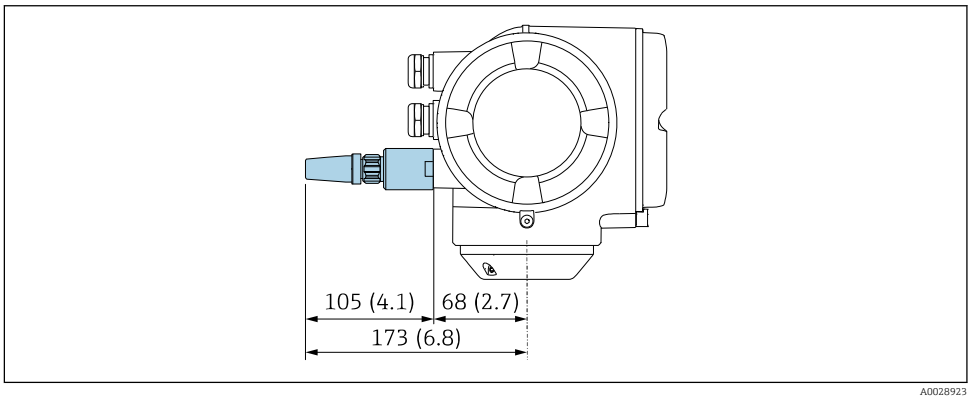

48 *Engineering unit mm (in)*

External WLAN antenna mounted with cable

The external WLAN antenna can be mounted separately from the transmitter if the transmission/ reception conditions at the transmitter mounting location are poor.

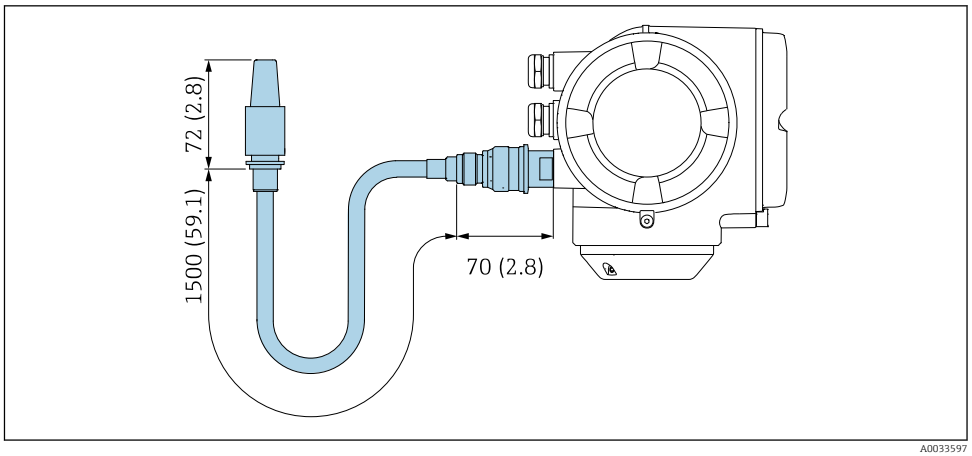

49 *Engineering unit mm (in)*

Ground disk for flange connection

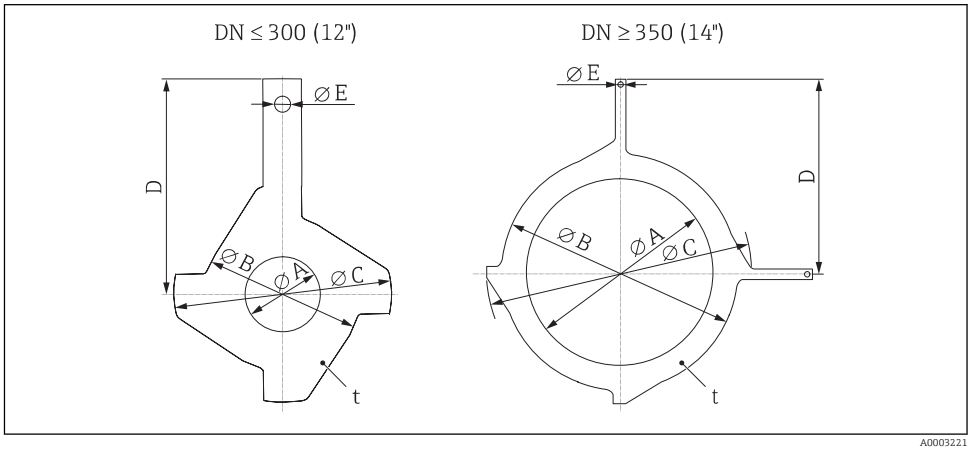

DN [1] EN (DIN), JIS, AS [2] [mm]	A PFA, PTFE [mm]	B [mm]	C [mm]	D [mm]	E [mm]	t [mm]
15	16	43	61.5	73	6.5	2
25	26	62	77.5	87.5	6.5	2
32	35	80	87.5	94.5	6.5	2
40	41	82	101	103	6.5	2
50	52	101	115.5	108	6.5	2
65	68	121	131.5	118	6.5	2
80	80	131	154.5	135	6.5	2
100	104	156	186.5	153	6.5	2
125	130	187	206.5	160	6.5	2
150	158	217	256	184	6.5	2
200	206	267	288	205	6.5	2
250	260	328	359	240	6.5	2
300 [3]	312	375	413	273	6.5	2
300 [4]	310	375	404	268	6.5	2

DN [1] EN (DIN), JIS, AS [2] [mm]	A PFA, PTFE [mm]	B [mm]	C [mm]	D [mm]	E [mm]	t [mm]
350 [3]	343	433	479	365	9.0	2
400 [3]	393	480	542	395	9.0	2
450 [3]	439	538	583	417	9.0	2
500 [3]	493	592	650	460	9.0	2
600 [3]	593	693	766	522	9.0	2

1) Ground disks DN 15 to 250 (½ to 10") can be used for all available flange standards/pressure ratings.
2) For flanges to AS, only DN 25 and DN 50 are available.
3) PN 10/16
4) PN 25, JIS 10K/20K

Dimensions in US units

Housing of Proline 500 – digital transmitter

Non-hazardous area or hazardous area: Zone 2; Class I, Division 2

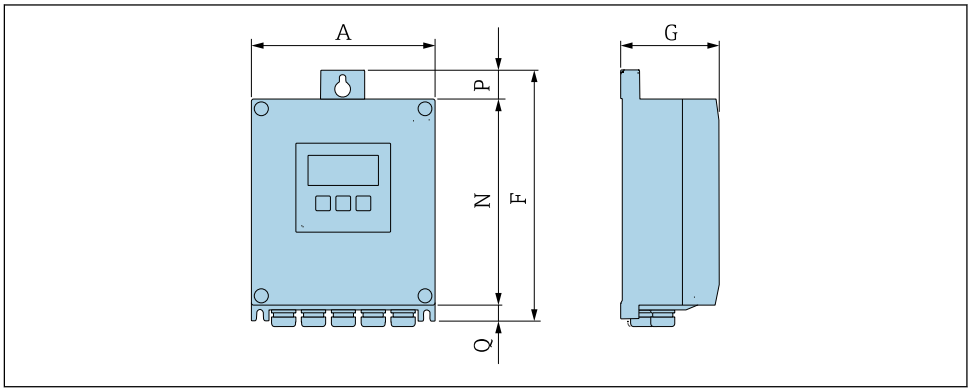

Order code for "Transmitter housing", option A "Aluminum, coated" and order code for "Integrated ISEM electronics", option A "Sensor"

A [in]	F [in]	G [in]	N [in]	P [in]	Q [in]
6.57	9.13	3.15	7.36	0.94	0.83

Order code for "Transmitter housing", option D "Polycarbonate" and order code for "Integrated ISEM electronics", option A "Sensor"

A [in]	F [in]	G [in]	N [in]	P [in]	Q [in]
6.97	9.21	3.54	7.76	0.67	0.87

Housing of Proline 500 transmitter

Hazardous area: Zone 2; Class I, Division 2 or Zone 1; Class I, Division 1

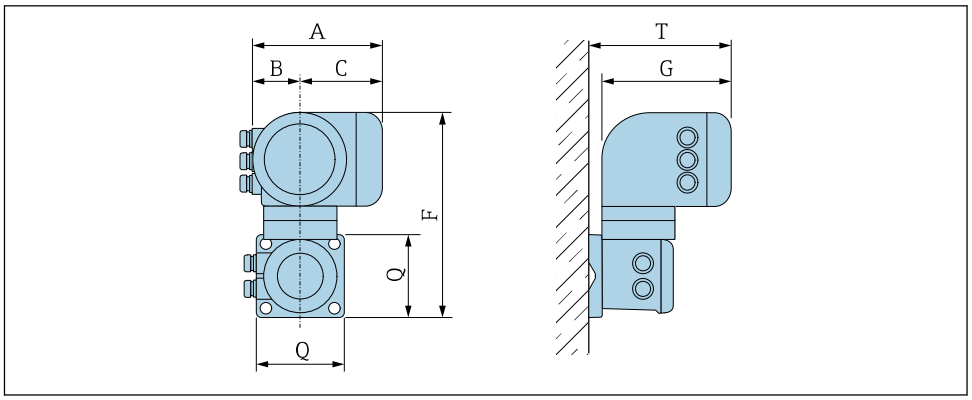

Order code for "Transmitter housing", option A "Aluminum, coated" and order code for "Integrated ISEM electronics", option B "Transmitter"

A [in]	B [in]	C [in]	F [in]	G [in]	Q [in]	T [in]
7.40	3.35	4.06	12.5	8.54	5.12	9.41

Order code for "Transmitter housing", option L "Cast, stainless" and order code for "Integrated ISEM electronics", option B "Transmitter"

A [in]	B [in]	C [in]	F [in]	G [in]	Q [in]	T [in]
7.40	3.35	4.06	11.6	8.54	5.12	9.41

Sensor connection housing

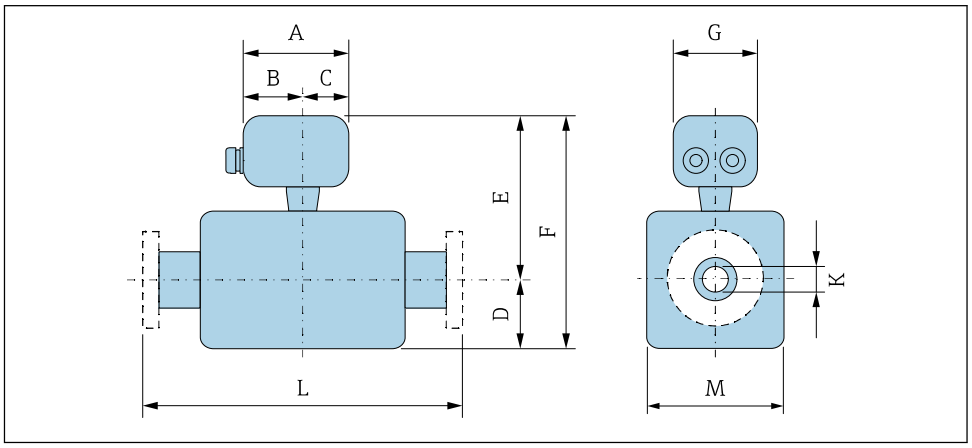

Order code for "Sensor connection housing", option A "Aluminum, coated"

DN [in]	A [in]	B [in]	C [in]	D [in]	E [1] [in]	F [1] [in]	G [in]	K [in]	L [in]	M [in]
½	5.83	3.70	2.13	3.31	7.76	11.06	5.35	[2]	[3]	4.72
1	5.83	3.70	2.13	3.31	7.76	11.06	5.35	[2]	[3]	4.72
1 ¼	5.83	3.70	2.13	3.31	7.76	11.06	5.35	[2]	[3]	4.72
1 ½	5.83	3.70	2.13	3.31	7.76	11.06	5.35	[2]	[3]	4.72
2	5.83	3.70	2.13	3.31	7.76	11.06	5.35	[2]	[3]	4.72

DN [in]	A [in]	B [in]	C [in]	D [in]	E [1] [in]	F [1] [in]	G [in]	K [in]	L [in]	M [in]
2 ½	5.83	3.70	2.13	4.29	8.74	13.03	5.35	[2]	[3]	7.09
3	5.83	3.70	2.13	4.29	8.74	13.03	5.35	[2]	[3]	7.09
4	5.83	3.70	2.13	4.29	8.74	13.03	5.35	[2]	[3]	7.09
5	5.83	3.70	2.13	5.91	10.31	16.22	5.35	[2]	[3]	10.2
6	5.83	3.70	2.13	5.91	10.31	16.22	5.35	[2]	[3]	10.2
8	5.83	3.70	2.13	7.09	11.3	18.39	5.35	[2]	[3]	12.8
10	5.83	3.70	2.13	8.07	12.28	20.35	5.35	[2]	[3]	15.8
12	5.83	3.70	2.13	9.06	13.27	22.32	5.35	[2]	[3]	18.1
14	5.83	3.70	2.13	11.1	15.71	26.81	5.35	[2]	[3]	22.2
16	5.83	3.70	2.13	12.13	16.73	28.86	5.35	[2]	[3]	24.3
18	5.83	3.70	2.13	13.11	17.72	30.83	5.35	[2]	[3]	26.2
20	5.83	3.70	2.13	14.13	18.74	32.87	5.35	[2]	[3]	28.2
24	5.83	3.70	2.13	16.18	20.79	36.97	5.35	[2]	[3]	32.3

1) With order code for "Sensor option", option CG "Sensor extended neck for insulation" or order code for "Liner", option B "PFA high temperature": values + 4.33 in
2) Depends on the liner → 🖹 84
3) Total length is independent of the process connections. Length according to DVGW (German Technical and Scientific Association for Gas and Water).→ 🖹 79

Order code for "Sensor connection housing", option L "Cast, stainless"

DN [in]	A [in]	B [in]	C [in]	D [in]	E [in]	F [in]	G [in]	K [in]	L [in]	M [in]
½	5.71	3.39	2.32	3.31	9.25	12.56	5.35	[1]	[2]	4.72
1	5.71	3.39	2.32	3.31	9.25	12.56	5.35	[1]	[2]	4.72
1 ¼	5.71	3.39	2.32	3.31	9.25	12.56	5.35	[1]	[2]	4.72
1 ½	5.71	3.39	2.32	3.31	9.25	12.56	5.35	[1]	[2]	4.72
2	5.71	3.39	2.32	3.31	9.25	12.56	5.35	[1]	[2]	4.72
2 ½	5.71	3.39	2.32	4.29	10.24	14.53	5.35	[1]	[2]	7.09
3	5.71	3.39	2.32	4.29	10.24	14.53	5.35	[1]	[2]	7.09
4	5.71	3.39	2.32	4.29	10.24	14.53	5.35	[1]	[2]	7.09
5	5.71	3.39	2.32	5.91	11.81	17.72	5.35	[1]	[2]	10.2
6	5.71	3.39	2.32	5.91	11.81	17.72	5.35	[1]	[2]	10.2
8	5.71	3.39	2.32	7.09	12.8	19.88	5.35	[1]	[2]	12.8
10	5.71	3.39	2.32	8.07	13.78	21.85	5.35	[1]	[2]	15.8
12	5.71	3.39	2.32	9.06	14.76	23.82	5.35	[1]	[2]	18.1
14	5.71	3.39	2.32	11.1	17.2	28.31	5.35	[1]	[2]	22.2
16	5.71	3.39	2.32	12.13	18.23	30.35	5.35	[1]	[2]	24.3
18	5.71	3.39	2.32	13.11	19.21	32.32	5.35	[1]	[2]	26.2
20	5.71	3.39	2.32	14.13	20.24	34.37	5.35	[1]	[2]	28.2
24	5.71	3.39	2.32	16.18	22.28	38.46	5.35	[1]	[2]	32.3

1) Depends on the liner → 🖹 84
2) Total length is independent of the process connections. Length according to DVGW (German Technical and Scientific Association for Gas and Water).→ 🖹 79

Flange connections

Flange

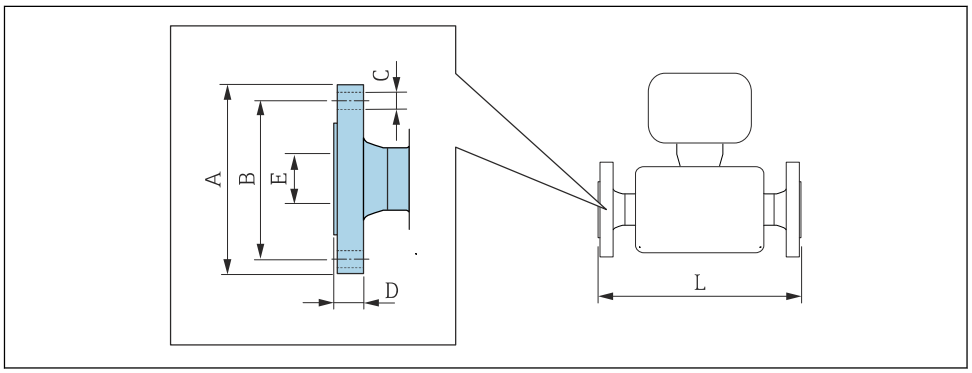

Flange according to ASME B16.5, Class 150 **A 105:** *order code for "Process connection", option* **A1K** **1.4404 (F316/F316L):** *order code for "Process connection", option* **A1S**						
DN [in]	**A [in]**	**B [in]**	**C [in]**	**D [in]**	**E [in]**	**L [1] [in]**
½	3.5	2.38	4 × Ø0.63	0.38	0.88	7.87
1	4.25	3.12	4 × Ø0.63	0.5	1.35	7.87
1 ½	5	3.88	4 × Ø0.63	0.63	1.93	7.87
2	6	4.75	4 × Ø0.75	0.69	2.41	7.87
3	7.5	6	4 × Ø0.75	0.88	3.54	7.87
4	9	7.5	8 × Ø0.75	0.88	4.54	9.84
6	11	9.5	8 × Ø0.88	0.94	6.7	11.8
8	13.5	11.75	8 × Ø0.88	1.06	8.7	13.8
10	16	14.25	12 × Ø1	1.17	10.85	17.7
12	19	17	12 × Ø1	1.19	12.85	19.7
14	21.06	18.75	12 × Ø1.13	1.39	13.62	21.7
16	23.43	21.25	16 × Ø1.13	1.46	15.59	23.6
18	25	22.75	16 × Ø1.25	1.58	17.6	25.6
20	27.56	25	20 × Ø1.25	1.7	19.61	25.6
24	32.09	29.5	20 × Ø1.37	1.89	23.62	30.7
Surface roughness (flange): Ra 6.3 to 12.5 µm						

1) Length according to DVGW (German Technical and Scientific Association for Gas and Water).

Flange according to ASME B16.5, Class 300 **A 105:** *order code for "Process connection", option* **A2K** **1.4404 (F316/F316L):** *order code for "Process connection", option* **A2S**						
DN [in]	**A [in]**	**B [in]**	**C [in]**	**D [in]**	**E [in]**	**L [1] [in]**
½	3.75	2.62	4 × Ø0.63	0.5	0.88	7.87
1	4.88	3.5	4 × Ø0.75	0.63	1.35	7.87
1 ½	6.12	4.5	4 × Ø0.88	0.75	1.93	7.87
2	6.5	5	8 × Ø0.75	0.82	2.41	7.87

Flange according to ASME B16.5, Class 300 **A 105:** *order code for "Process connection", option* **A2K** **1.4404 (F316/F316L):** *order code for "Process connection", option* **A2S**						
DN [in]	**A [in]**	**B [in]**	**C [in]**	**D [in]**	**E [in]**	**L [1] [in]**
3	8.25	6.62	8 × Ø0.88	1.06	3.54	7.87
4	10	7.88	8 × Ø0.88	1.19	4.54	9.84
6	12.5	10.62	12 × Ø0.88	1.38	6.7	11.8
Surface roughness (flange): Ra 6.3 to 12.5 µm						

1) Length according to DVGW (German Technical and Scientific Association for Gas and Water).

Accessories

Protective cover

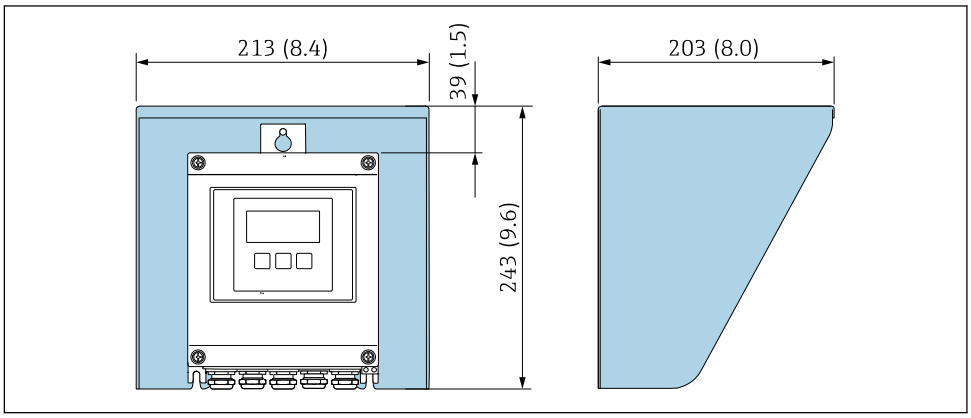

50 Weather protection cover for Proline 500 – digital

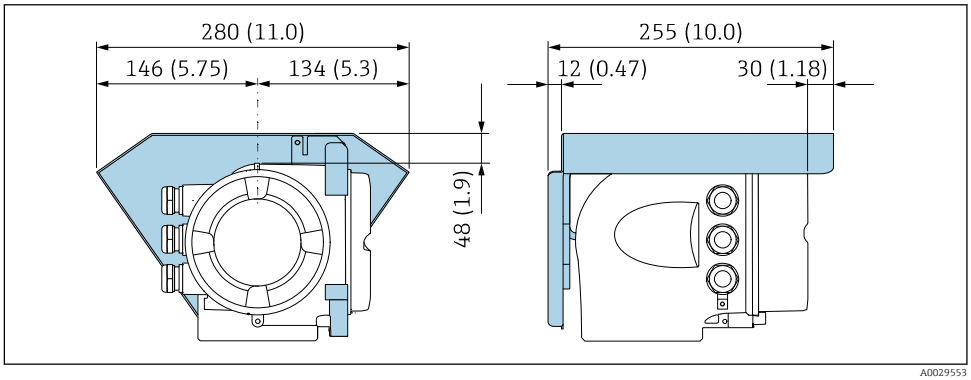

51 Weather protection cover for Proline 500

External WLAN antenna

The external WLAN antenna is not suitable for use in hygienic applications.

Proline 500 – digital

External WLAN antenna mounted on device

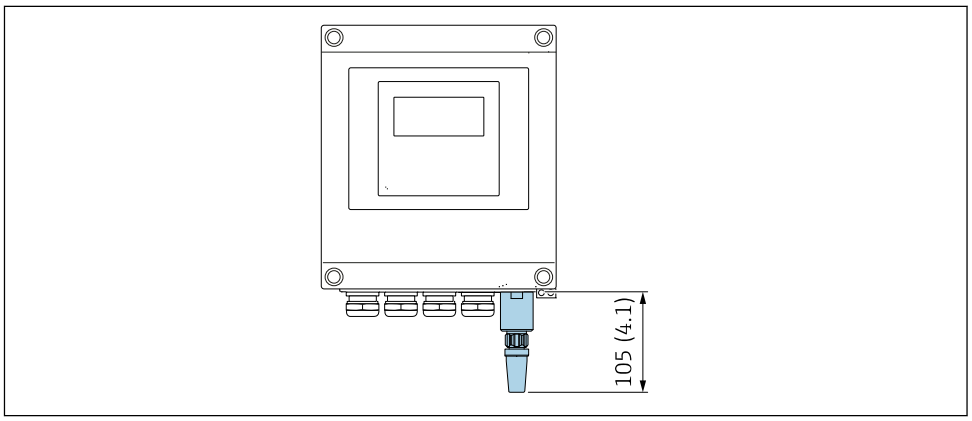

52 *Engineering unit mm (in)*

External WLAN antenna mounted with cable

The external WLAN antenna can be mounted separately from the transmitter if the transmission/ reception conditions at the transmitter mounting location are poor.

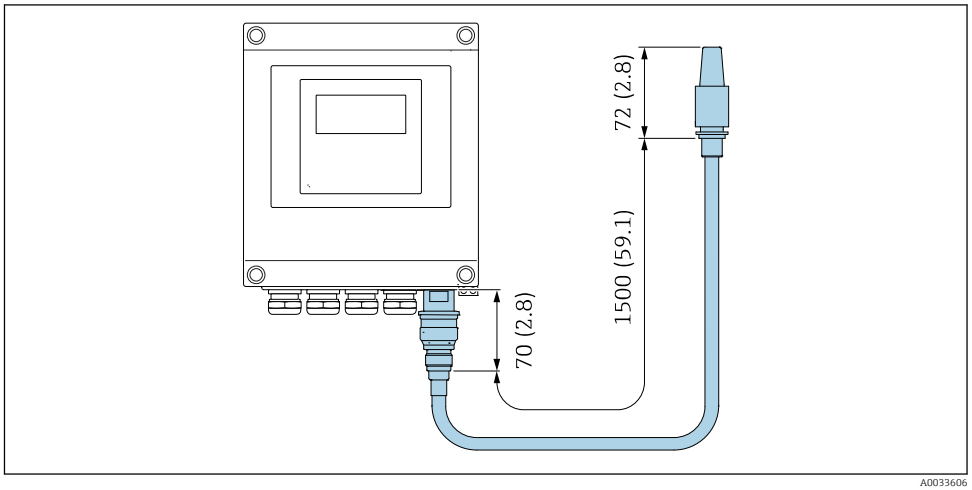

53 *Engineering unit mm (in)*

Proline 500

External WLAN antenna mounted on device

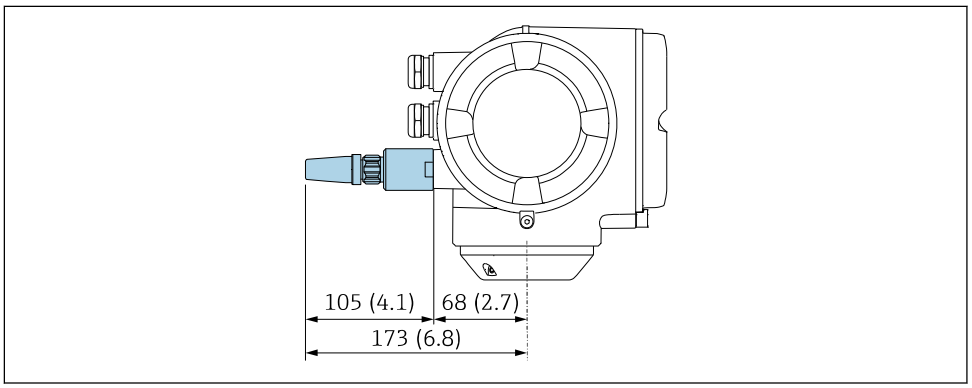

54 *Engineering unit mm (in)*

External WLAN antenna mounted with cable

The external WLAN antenna can be mounted separately from the transmitter if the transmission/ reception conditions at the transmitter mounting location are poor.

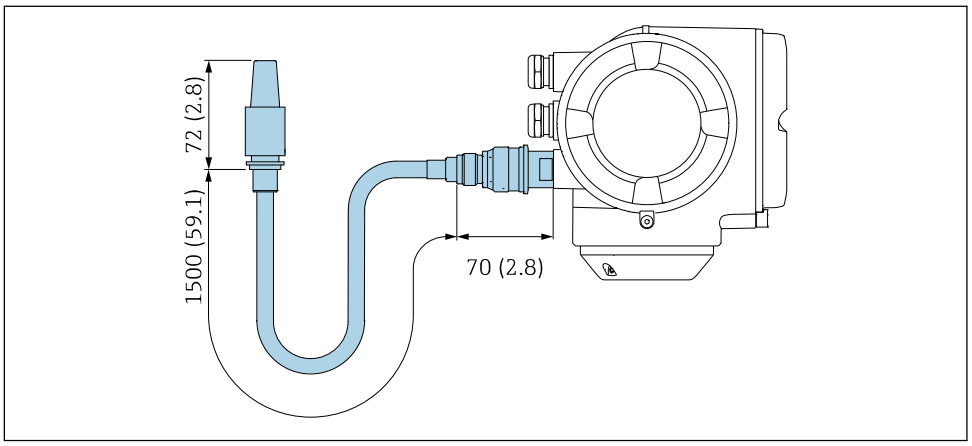

55 *Engineering unit mm (in)*

Ground disk for flange connection

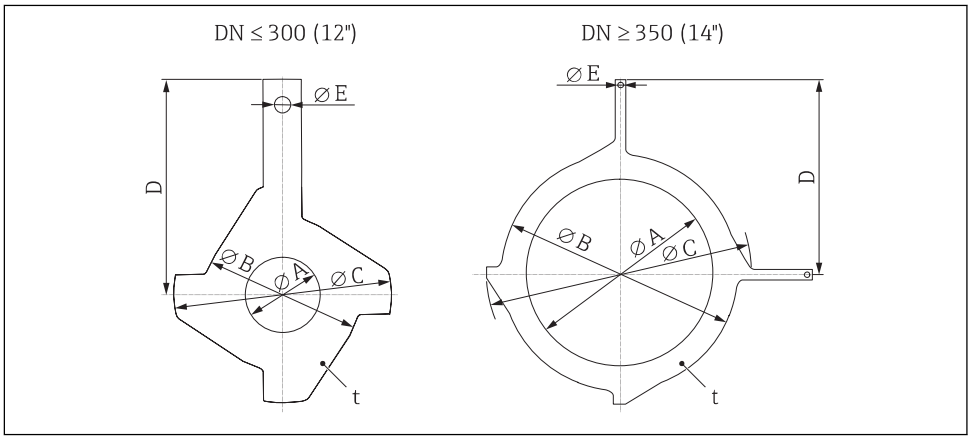

DN [1] ASME [in]	A PFA, PTFE [in]	B [in]	C [in]	D [in]	E [in]	t [in]
½	0.63	1.69	2.42	2.87	0.26	0.08
1	1.02	2.44	3.05	3.44	0.26	0.08
1 ½	1.61	3.23	3.98	4.06	0.26	0.08
2	2.05	3.98	4.55	4.25	0.26	0.08
3	3.15	5.16	6.08	5.31	0.26	0.08
4	4.09	6.14	7.34	6.02	0.26	0.08
6	6.22	8.54	10.08	7.24	0.26	0.08
8	8.11	10.51	11.34	8.07	0.26	0.08
10	10.24	12.91	14.13	9.45	0.26	0.08
12	12.28	14.76	16.26	10.75	0.26	0.08
14	13.50	17.05	18.86	14.37	0.35	0.08
16	15.47	18.90	21.34	15.55	0.35	0.08
18	17.28	21.18	22.95	16.42	0.35	0.08
20	19.41	23.31	25.59	18.11	0.35	0.08
24	23.35	27.28	30.16	20.55	0.35	0.08

1) Ground disks can be used for all available pressure ratings.

Weight

All values (weight exclusive of packaging material) refer to devices with flanges of the standard pressure rating.
The weight may be lower than indicated depending on the pressure rating and design.

Transmitter
- Proline 500 – digital polycarbonate: 1.4 kg (3.1 lbs)
- Proline 500 – digital aluminum: 2.4 kg (5.3 lbs)
- Proline 500 aluminum: 6.5 kg (14.3 lbs)
- Proline 500 cast, stainless: 15.6 kg (34.4 lbs)

Sensor
- Sensor with aluminum connection housing version: see the information in the following table
- Sensor with cast connection housing version, stainless: +3.7 kg (+8.2 lbs)

Weight in SI units

Nominal diameter		EN (DIN), AS [1]		ASME		JIS	
[mm]	[in]	Pressure rating	[kg]	Pressure rating	[kg]	Pressure rating	[kg]
15	½	PN 40	4.5	Class 150	4.5	10K	4.5
25	1	PN 40	5.3	Class 150	5.3	10K	5.3
32	–	PN 40	6	Class 150	–	10K	5.3
40	1 ½	PN 40	7.4	Class 150	7.4	10K	6.3
50	2	PN 40	8.6	Class 150	8.6	10K	7.3
65	–	PN 16	10	Class 150	–	10K	9.1
80	3	PN 16	12	Class 150	12	10K	10.5
100	4	PN 16	14	Class 150	14	10K	12.7
125	–	PN 16	19.5	Class 150	–	10K	19
150	6	PN 16	23.5	Class 150	23.5	10K	22.5
200	8	PN 10	43	Class 150	43	10K	39.9
250	10	PN 10	63	Class 150	73	10K	67.4

Nominal diameter		EN (DIN), AS [1]		ASME		JIS	
[mm]	[in]	Pressure rating	[kg]	Pressure rating	[kg]	Pressure rating	[kg]
300	12	PN 10	68	Class 150	108	10K	70.3
350	14	PN 10	103	Class 150	173	10K	79
400	16	PN 10	118	Class 150	203	10K	100
450	18	PN 10	159	Class 150	253	10K	128
500	20	PN 10	154	Class 150	283	10K	142
600	24	PN 10	206	Class 150	403	10K	188

1) For flanges to AS, only DN 25 and 50 are available.

Weight in US units

Nominal diameter		ASME	
[mm]	[in]	Pressure rating	[lbs]
15	½	Class 150	9.92
25	1	Class 150	11.7
40	1 ½	Class 150	16.3
50	2	Class 150	19.0
80	3	Class 150	26.5
100	4	Class 150	30.9
150	6	Class 150	51.8
200	8	Class 150	94.8
250	10	Class 150	161.0
300	12	Class 150	238.1
350	14	Class 150	381.5
400	16	Class 150	447.6
450	18	Class 150	557.9
500	20	Class 150	624.0
600	24	Class 150	888.6

Measuring tube specification

Nominal diameter		Pressure rating					Process connection internal diameter			
		EN (DIN)	ASME	AS 2129	AS 4087	JIS	PFA		PTFE	
[mm]	[in]	[bar]	[psi]	[bar]	[bar]	[bar]	[mm]	[in]	[mm]	[in]
15	½	PN 40	Class 150	–	–	20K	–	–	15	0.59
25	1	PN 40	Class 150	Table E	–	20K	23	0.91	26	1.02
32	–	PN 40	–	–	–	20K	32	1.26	35	1.38
40	1 ½	PN 40	Class 150	–	–	20K	36	1.42	41	1.61
50	2	PN 40	Class 150	Table E	PN 16	10K	48	1.89	52	2.05
65	–	PN 16	–	–	–	10K	63	2.48	67	2.64
80	3	PN 16	Class 150	–	–	10K	75	2.95	80	3.15
100	4	PN 16	Class 150	–	–	10K	101	3.98	104	4.09
125	–	PN 16	–	–	–	10K	126	4.96	129	5.08
150	6	PN 16	Class 150	–	–	10K	154	6.06	156	6.14

Nominal diameter		Pressure rating					Process connection internal diameter			
		EN (DIN)	ASME	AS 2129	AS 4087	JIS	PFA		PTFE	
[mm]	[in]	[bar]	[psi]	[bar]	[bar]	[bar]	[mm]	[in]	[mm]	[in]
200	8	PN 10	Class 150	–	–	10K	201	7.91	202	7.95
250	10	PN 10	Class 150	–	–	10K	–	–	256	10.1
300	12	PN 10	Class 150	–	–	10K	–	–	306	12.0
350	14	PN 10	Class 150	–	–	10K	–	–	337	13.3
400	16	PN 10	Class 150	–	–	10K	–	–	387	15.2
450	18	PN 10	Class 150	–	–	10K	–	–	432	17.0
500	20	PN 10	Class 150	–	–	10K	–	–	487	19.2
600	24	PN 10	Class 150	–	–	10K	–	–	593	23.3

Materials

Transmitter housing

Housing of Proline 500 – digital transmitter

Order code for "Transmitter housing":
- Option **A** "Aluminum coated": aluminum, AlSi10Mg, coated
- Option **D** "Polycarbonate": polycarbonate

Housing of Proline 500 transmitter

Order code for "Transmitter housing":
- Option **A** "Aluminum coated": aluminum, AlSi10Mg, coated
- Option **L** "Cast, stainless": cast, stainless steel, 1.4409 (CF3M) similar to 316L

Window material

Order code for "Transmitter housing":
- Option **A** "Aluminum, coated": glass
- Option **D** "Polycarbonate": plastic
- Option **L** "Cast, stainless": glass

Sensor connection housing

Order code for "Sensor connection housing":
- Option **A** "Aluminum coated": aluminum, AlSi10Mg, coated
- Option **L** "Cast, stainless": 1.4409 (CF3M) similar to 316L

Cable entries/cable glands

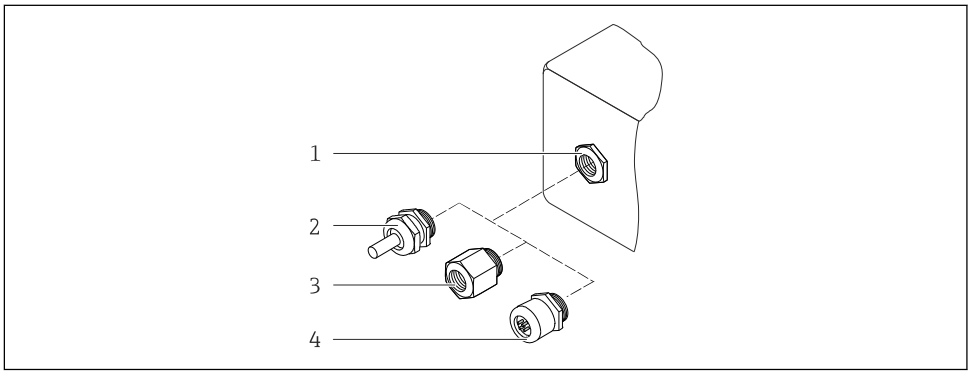

56 *Possible cable entries/cable glands*

1 *Female thread M20 × 1.5*
2 *Cable gland M20 × 1.5*
3 *Adapter for cable entry with internal thread G ½" or NPT ½"*
4 *Device plugs*

Cable entries and adapters	Material
Cable gland M20 × 1.5	Plastic

▪ Adapter for cable entry with internal thread G ½"
▪ Adapter for cable entry with internal thread NPT ½"
Only available for certain device versions:
▪ Order code for "Transmitter housing":
  ▪ Option **A** "Aluminum, coated"
  ▪ Option **D** "Polycarbonate"
▪ Order code for "Sensor connection housing":
  ▪ Proline 500 – digital:
  Option **A** "Aluminum coated"
  Option **L** "Cast, stainless"
  ▪ Proline 500:
  Option **A** "Aluminum coated"
  Option **L** "Cast, stainless"
	Nickel-plated brass

▪ Adapter for cable entry with internal thread G ½"
▪ Adapter for cable entry with internal thread NPT ½"
Only available for certain device versions:
▪ Order code for "Transmitter housing":
  Option **L** "Cast, stainless"
▪ Order code for "Sensor connection housing":
  Option **L** "Cast, stainless"
	Stainless steel, 1.4404 (316L)

Adapter for device plug Device plug for digital communication: Only available for certain device versions → 30.	Stainless steel, 1.4404 (316L)

Device plug

Electrical connection	Material
Plug M12x1	▪ Socket: Stainless steel, 1.4404 (316L) ▪ Contact housing: Polyamide ▪ Contacts: Gold-plated brass

Connecting cable

UV rays can impair the cable outer sheath. Protect the cable from exposure to sun as much as possible.

Connecting cable for sensor - Proline 500 – digital transmitter

PVC cable with copper shield

Connecting cable for sensor - Proline 500 transmitter

- Standard cable: PVC cable with copper shield
- Reinforced cable: PVC cable with copper shield and additional steel wire braided jacket

Sensor housing

- DN 15 to 300 (½ to 12"): coated aluminum AlSi10Mg
- DN 350 to 600 (14 to 24"): carbon steel with protective varnish

Measuring tubes

Stainless steel, 1.4301/304/1.4306/304L
For flanges made of carbon with Al/Zn protective coating (DN 15 to 300 (½ to 12")) or protective varnish (DN 350 to 600 (14 to 24"))

Liner

- PFA
- PTFE

Process connections

EN 1092-1 (DIN 2501)
Stainless steel, 1.4571; carbon steel, E250C [1)]/S235JRG2/P245GH

ASME B16.5
Stainless steel, F316L; carbon steel, A105 [1)]

JIS B2220
Stainless steel, F316L [1)]; carbon steel, A105/A350 LF2

AS 2129 Table E
- DN 25 (1"): carbon steel, A105/S235JRG2
- DN 40 (1 ½"): carbon steel, A105/S275JR

AS 4087 PN 16
Carbon steel, A105/S275JR

Electrodes

Stainless steel, 1.4435 (F316L); Alloy C22, 2.4602 (UNS N06022); platinum; tantalum; titanium

Seals

As per DIN EN 1514-1, form IBC

Accessories

Protective cover

Stainless steel, 1.4404 (316L)

External WLAN antenna

- Antenna: ASA plastic (acrylic ester-styrene-acrylonitrile) and nickel-plated brass
- Adapter: Stainless steel and nickel-plated brass
- Cable: Polyethylene
- Plug: Nickel-plated brass
- Angle bracket: Stainless steel

Ground disks

Stainless steel, 1.4435 (F316L); Alloy C22, 2.4602 (UNS N06022); tantalum; titanium

1) DN 15 to 300 (½ to 12") with Al/Zn protective varnish; DN 350 to 600 (14 to 24") with protective varnish

Fitted electrodes

Measuring electrodes, reference electrodes and electrodes for empty pipe detection:
- Standard: stainless steel, 1.4435 (F316L); Alloy C22, 2.4602 (UNS N06022); tantalum, titanium
- Optional: only platinum measuring electrodes

Process connections

- EN 1092-1 (DIN 2501)
- ASME B16.5
- JIS B2220
- AS 2129 Table E
- AS 4087 PN 16

For information on the different materials used in the process connections → 87

Surface roughness

Stainless steel electrodes, 1.4435 (F316L); Alloy C22, 2.4602 (UNS N06022); platinum; tantalum; titanium:
≤ 0.3 to 0.5 µm (11.8 to 19.7 µin)
(All data relate to parts in contact with fluid)

Liner with PFA:
≤ 0.4 µm (15.7 µin)
(All data relate to parts in contact with fluid)

Human interface

Operating concept

Operator-oriented menu structure for user-specific tasks
- Commissioning
- Operation
- Diagnostics
- Expert level

Fast and safe commissioning
- Guided menus ("Make-it-run" wizards) for applications
- Menu guidance with brief descriptions of the individual parameter functions
- Access to the device via Web server → 108
- WLAN access to the device via mobile handheld terminal, tablet or smart phone

Reliable operation
- Operation in local language → 88
- Uniform operating philosophy applied to device and operating tools
- If replacing electronic modules, transfer the device configuration via the integrated memory (HistoROM backup) which contains the process and measuring device data and the event logbook. No need to reconfigure.

Efficient diagnostics increase measurement availability
- Troubleshooting measures can be called up via the device and in the operating tools
- Diverse simulation options, logbook for events that occur and optional line recorder functions

Languages

Can be operated in the following languages:
- Via local operation
  English, German, French, Spanish, Italian, Dutch, Portuguese, Polish, Russian, Turkish, Chinese, Japanese, Korean, Bahasa (Indonesian), Vietnamese, Czech, Swedish
- Via Web browser
  English, German, French, Spanish, Italian, Dutch, Portuguese, Polish, Russian, Turkish, Chinese, Japanese, Korean, Bahasa (Indonesian), Vietnamese, Czech, Swedish
- Via "FieldCare", "DeviceCare" operating tool: English, German, French, Spanish, Italian, Chinese, Japanese

Local operation

Via display module

Equipment:
- Order code for "Display; operation", option F "4-line, illuminated, graphic display; touch control"
- Order code for "Display; operation", option G "4-line, illuminated, graphic display; touch control + WLAN"

Information about WLAN interface → 95

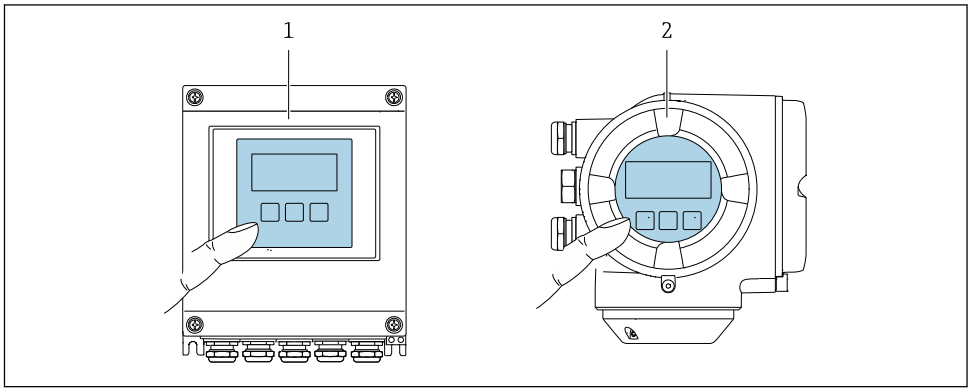

57 *Operation with touch control*

1 Proline 500 – digital
2 Proline 500

Display elements

- 4-line, illuminated, graphic display
- White background lighting; switches to red in event of device errors
- Format for displaying measured variables and status variables can be individually configured
- Permitted ambient temperature for the display: –20 to +60 °C (–4 to +140 °F)
  The readability of the display may be impaired at temperatures outside the temperature range.

Operating elements

- External operation via touch control (3 optical keys) without opening the housing: ⊞, ⊟, Ⓔ
- Operating elements also accessible in the various zones of the hazardous area

Remote operation

Via HART protocol

This communication interface is available in device versions with a HART output.

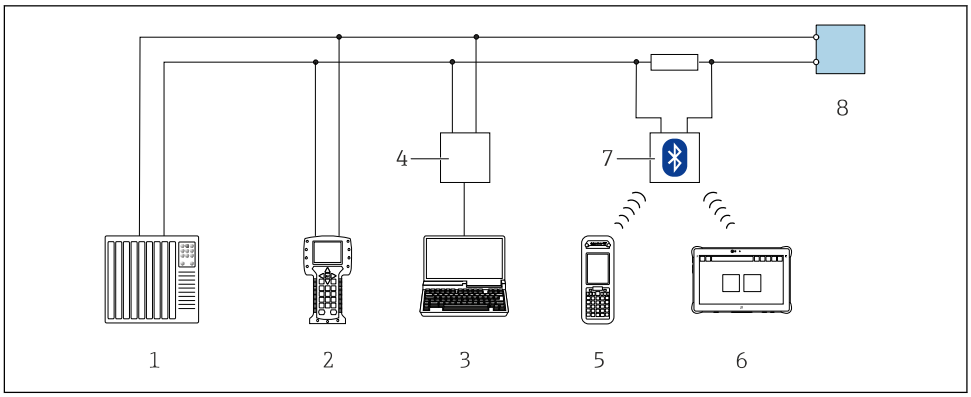

58 *Options for remote operation via HART protocol (active)*

1 *Control system (e.g. PLC)*
2 *Field Communicator 475*
3 *Computer with Web browser (e.g. Internet Explorer) for access to the integrated device Web server or computer with an operating tool (e.g. FieldCare, DeviceCare, AMS Device Manager, SIMATIC PDM) with COM DTM "CDI Communication TCP/IP"*
4 *Commubox FXA195 (USB)*
5 *Field Xpert SFX350 or SFX370*
6 *Field Xpert SMT70*
7 *VIATOR Bluetooth modem with connecting cable*
8 *Transmitter*

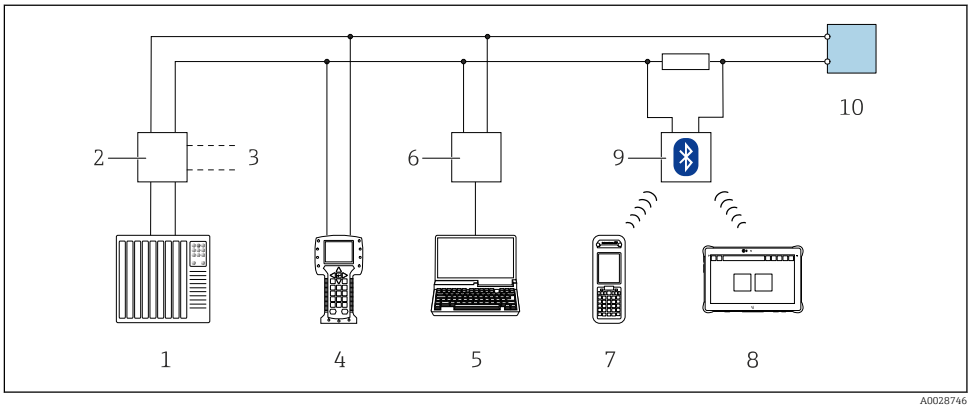

59 *Options for remote operation via HART protocol (passive)*

1 *Control system (e.g. PLC)*
2 *Transmitter power supply unit, e.g. RN221N (with communication resistor)*
3 *Connection for Commubox FXA195 and Field Communicator 475*
4 *Field Communicator 475*
5 *Computer with Web browser (e.g. Internet Explorer) for access to the integrated device Web server or computer with an operating tool (e.g. FieldCare, DeviceCare, AMS Device Manager, SIMATIC PDM) with COM DTM "CDI Communication TCP/IP"*
6 *Commubox FXA195 (USB)*
7 *Field Xpert SFX350 or SFX370*
8 *Field Xpert SMT70*
9 *VIATOR Bluetooth modem with connecting cable*
10 *Transmitter*

Via FOUNDATION Fieldbus network

This communication interface is available in device versions with FOUNDATION Fieldbus.

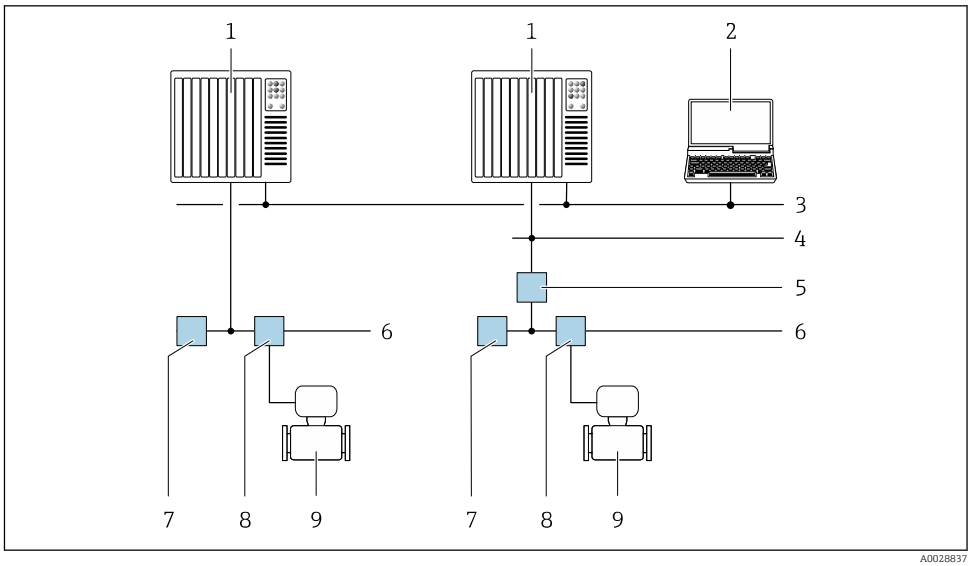

60 *Options for remote operation via FOUNDATION Fieldbus network*

1 *Automation system*
2 *Computer with FOUNDATION Fieldbus network card*
3 *Industry network*
4 *High Speed Ethernet FF-HSE network*
5 *Segment coupler FF-HSE/FF-H1*
6 *FOUNDATION Fieldbus FF-H1 network*
7 *Power supply FF-H1 network*
8 *T-box*
9 *Measuring device*

Via PROFIBUS DP network

This communication interface is available in device versions with PROFIBUS DP.

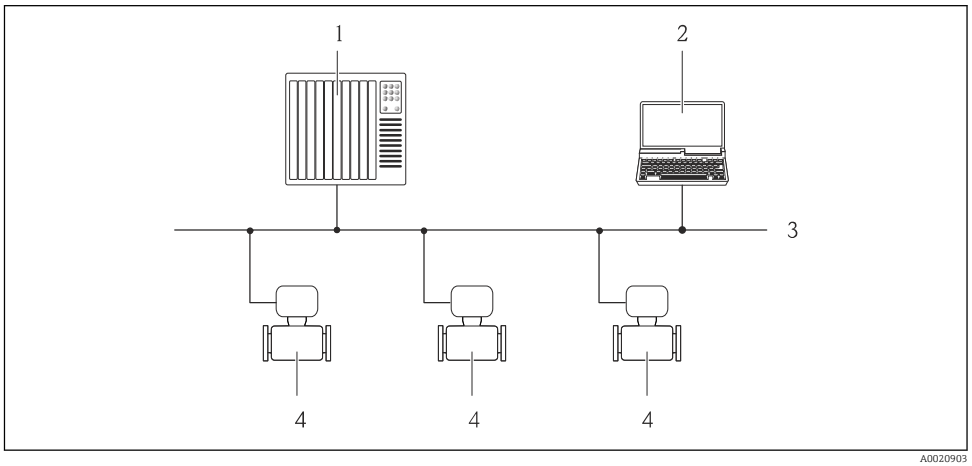

61 *Options for remote operation via PROFIBUS DP network*

1 *Automation system*
2 *Computer with PROFIBUS network card*
3 *PROFIBUS DP network*
4 *Measuring device*

Via PROFIBUS PA network

This communication interface is available in device versions with PROFIBUS PA.

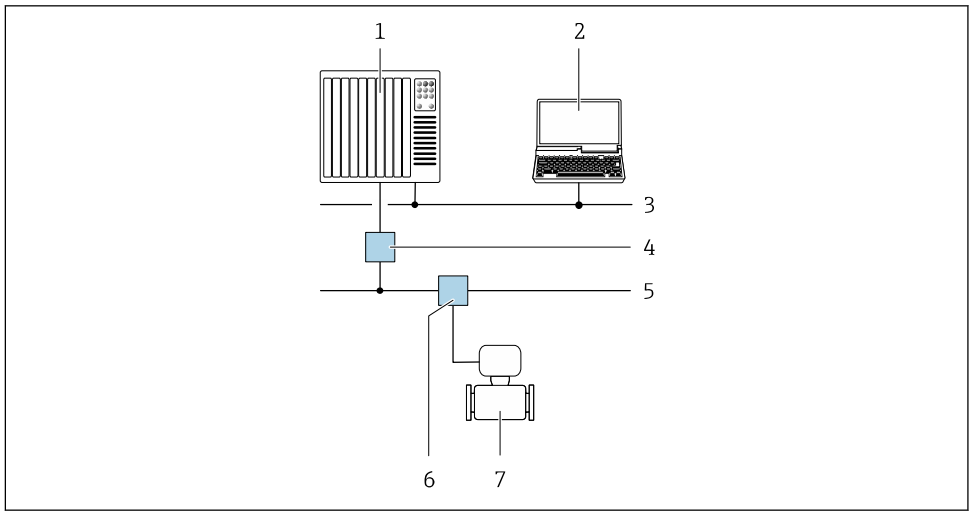

62 *Options for remote operation via PROFIBUS PA network*

1 Automation system
2 Computer with PROFIBUS network card
3 PROFIBUS DP network
4 Segment coupler PROFIBUS DP/PA
5 PROFIBUS PA network
6 T-box
7 Measuring device

Via Modbus RS485 protocol

This communication interface is available in device versions with a Modbus-RS485 output.

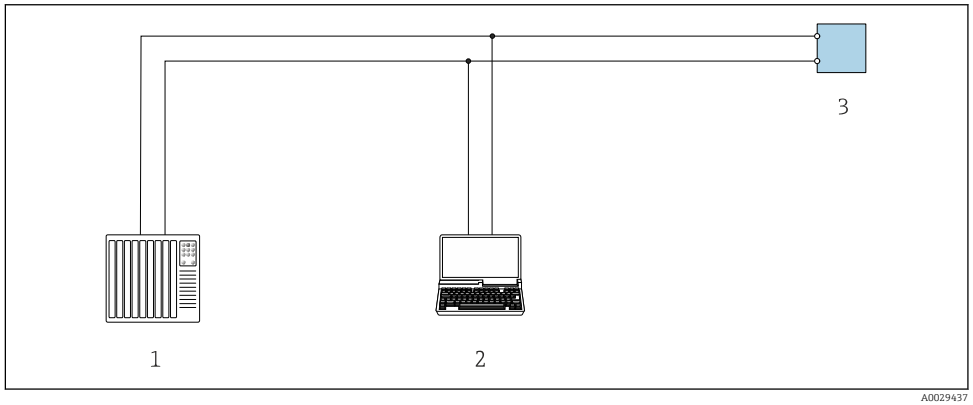

63 *Options for remote operation via Modbus-RS485 protocol (active)*

1 Control system (e.g. PLC)
2 Computer with Web browser (e.g. Internet Explorer) for accessing the integrated device Web server or with operating tool (e.g. FieldCare, DeviceCare) with COM DTM "CDI Communication TCP/IP" or Modbus DTM
3 Transmitter

Via EtherNet/IP network

This communication interface is available in device versions with EtherNet/IP.

Star topology

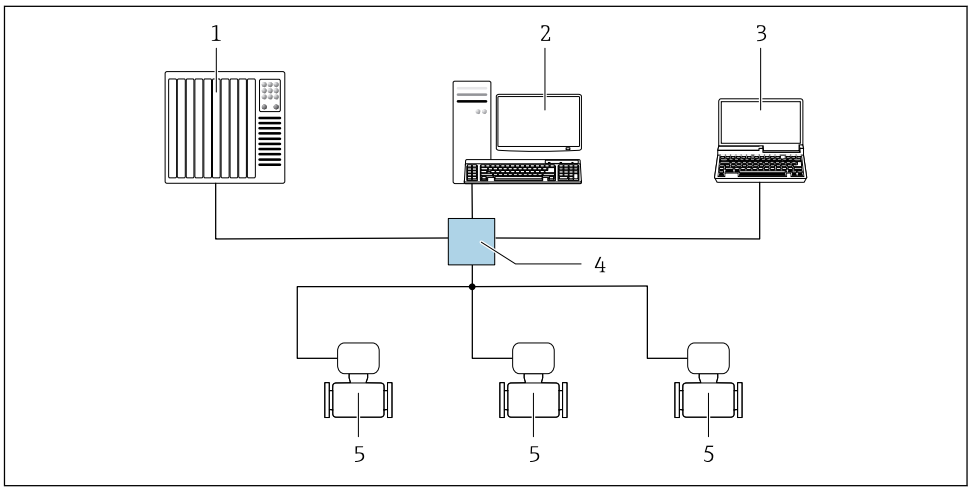

64 *Options for remote operation via EtherNet/IP network: star topology*

1 *Automation system, e.g. "RSLogix" (Rockwell Automation)*
2 *Workstation for measuring device operation: with Custom Add-On Profile for "RSLogix 5000" (Rockwell Automation) or with Electronic Data Sheet (EDS)*
3 *Computer with Web browser (e.g. Internet Explorer) for accessing the integrated device Web server or computer with operating tool (e.g. FieldCare, DeviceCare) with COM DTM "CDI Communication TCP/IP"*
4 *Ethernet switch*
5 *Measuring device*

Ring topology

The device is integrated via the terminal connection for signal transmission (output 1) and the service interface (CDI-RJ45).

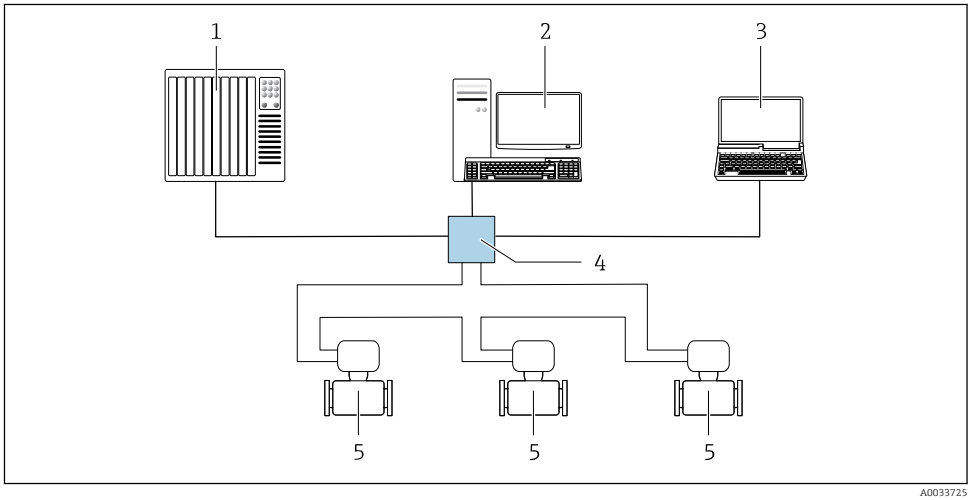

65 *Options for remote operation via EtherNet/IP network: ring topology*

1 *Automation system, e.g. "RSLogix" (Rockwell Automation)*
2 *Workstation for measuring device operation: with Custom Add-On Profile for "RSLogix 5000" (Rockwell Automation) or with Electronic Data Sheet (EDS)*
3 *Computer with Web browser (e.g. Internet Explorer) for accessing the integrated device Web server or computer with operating tool (e.g. FieldCare, DeviceCare) with COM DTM "CDI Communication TCP/IP"*
4 *Ethernet switch*
5 *Measuring device*

Via PROFINET network

This communication interface is available in device versions with PROFINET.

Star topology

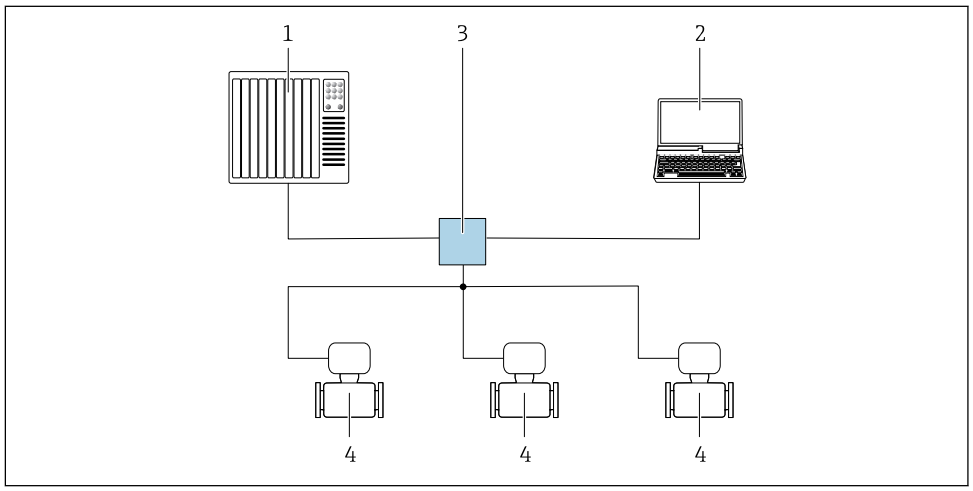

66 Options for remote operation via PROFINET network: star topology

1 *Automation system, e.g. Simatic S7 (Siemens)*
2 *Computer with Web browser (e.g. Internet Explorer) for accessing the integrated device Web server or computer with operating tool (e.g. FieldCare, DeviceCare, SIMATIC PDM) with COM DTM "CDI Communication TCP/IP"*
3 *Switch, e.g. Scalance X204 (Siemens)*
4 *Measuring device*

Ring topology

The device is integrated via the terminal connection for signal transmission (output 1) and the service interface (CDI-RJ45).

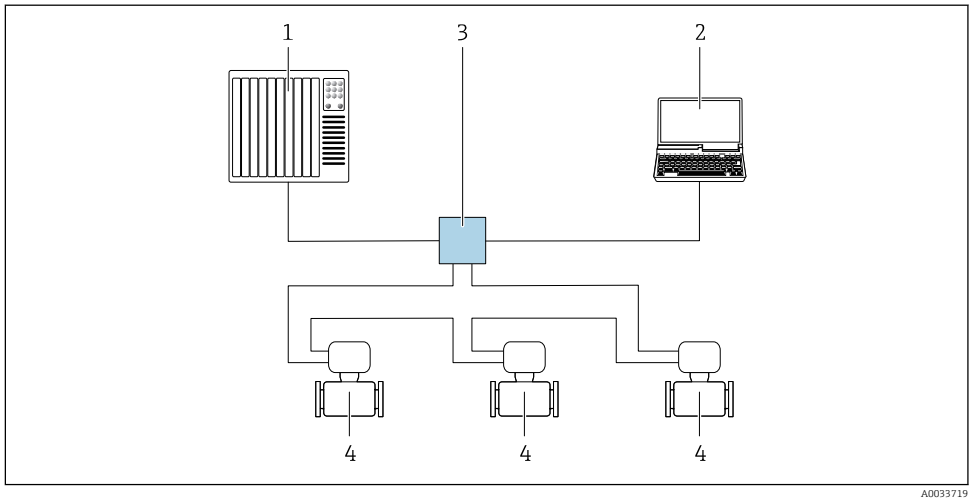

67 Options for remote operation via PROFINET network: ring topology

1 *Automation system, e.g. Simatic S7 (Siemens)*
2 *Computer with Web browser (e.g. Internet Explorer) for accessing the integrated device Web server or computer with operating tool (e.g. FieldCare, DeviceCare, SIMATIC PDM) with COM DTM "CDI Communication TCP/IP"*
3 *Switch, e.g. Scalance X204 (Siemens)*
4 *Measuring device*

Service interface

Via service interface (CDI-RJ45)

A point-to-point connection can be established to configure the device onsite. With the housing open, the connection is established directly via the service interface (CDI-RJ45) of the device.

An adapter for RJ45 and the M12 connector is optionally available:
Order code for "Accessories", option **NB**: "Adapter RJ45 M12 (service interface)"

The adapter connects the service interface (CDI-RJ45) to an M12 connector mounted in the cable entry. Therefore the connection to the service interface can be established via an M12 connector without opening the device.

Proline 500 – digital transmitter

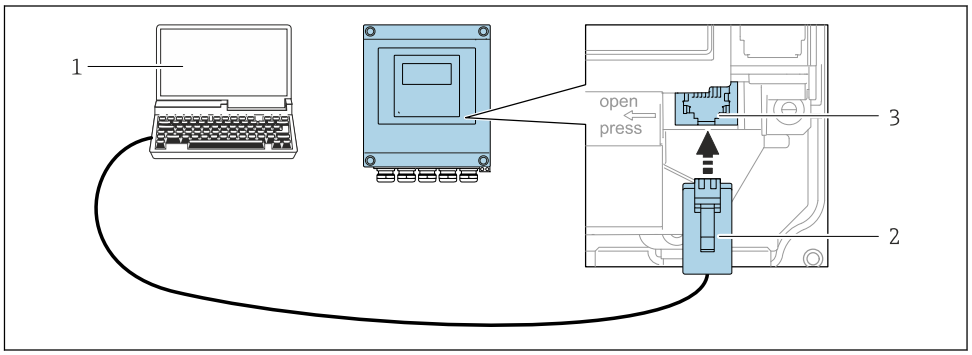

68 *Connection via service interface (CDI-RJ45)*

1 *Computer with Web browser (e.g. Microsoft Internet Explorer, Microsoft Edge) for accessing the integrated device Web server or with "FieldCare", "DeviceCare" operating tool with COM DTM "CDI Communication TCP/IP" or Modbus DTM*
2 *Standard Ethernet connecting cable with RJ45 connector*
3 *Service interface (CDI-RJ45) of the measuring device with access to the integrated Web server*

Proline 500 transmitter

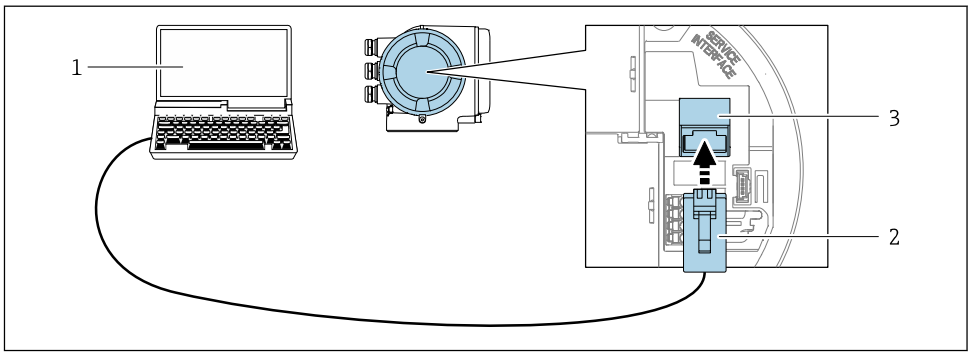

69 *Connection via service interface (CDI-RJ45)*

1 *Computer with Web browser (e.g. Microsoft Internet Explorer, Microsoft Edge) for accessing the integrated device Web server or with "FieldCare", "DeviceCare" operating tool with COM DTM "CDI Communication TCP/IP" or Modbus DTM*
2 *Standard Ethernet connecting cable with RJ45 connector*
3 *Service interface (CDI-RJ45) of the measuring device with access to the integrated Web server*

Via WLAN interface

The optional WLAN interface is available on the following device version:
Order code for "Display; operation", option G "4-line, illuminated; touch control + WLAN"

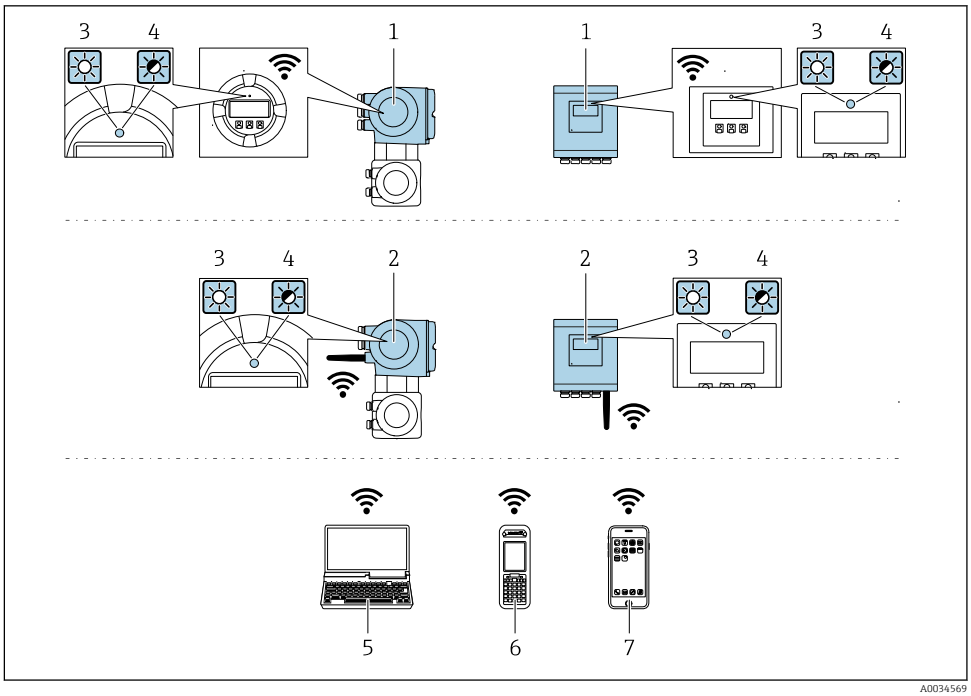

1 *Transmitter with integrated WLAN antenna*
2 *Transmitter with external WLAN antenna*
3 *LED lit constantly: WLAN reception is enabled on measuring device*
4 *LED flashing: WLAN connection established between operating unit and measuring device*
5 *Computer with WLAN interface and Web browser (e.g. Microsoft Internet Explorer, Microsoft Edge) for accessing the integrated device Web server or with operating tool (e.g. FieldCare, DeviceCare)*
6 *Mobile handheld terminal with WLAN interface and Web browser (e.g. Microsoft Internet Explorer, Microsoft Edge) for accessing the integrated device Web server or operating tool (e.g. FieldCare, DeviceCare)*
7 *Smart phone or tablet (e.g. Field Xpert SMT70)*

Function	WLAN: IEEE 802.11 b/g (2.4 GHz) ▪ Access point with DHCP server (default setting) ▪ Network
Encryption	WPA2-PSK AES-128 (in accordance with IEEE 802.11i)
Configurable WLAN channels	1 to 11
Degree of protection	IP67
Available antennas	▪ Internal antenna ▪ External antenna (optional) In the event of poor transmission/reception conditions at the place of installation. Available as an accessory → 106. Only one antenna active in each case!
Range	▪ Internal antenna: typically 10 m (32 ft) ▪ External antenna: typically 50 m (164 ft)
Materials (external antenna)	▪ Antenna: ASA plastic (acrylic ester-styrene-acrylonitrile) and nickel-plated brass ▪ Adapter: Stainless steel and nickel-plated brass ▪ Cable: Polyethylene ▪ Connector: Nickel-plated brass ▪ Angle bracket: Stainless steel

Network integration

With the optional "OPC-UA Server" application package, the device can be integrated into an Ethernet network via the service interface (CDI-RJ45 and WLAN) and communicate with OPC-UA clients. If the device is used in this way, IT security must be considered.

Transmitters with an Ex de approval may **not** be connected via the service interface (CDI-RJ45)!
Order code for "Approval transmitter + sensor", options (Ex de):
BB, C2, GB, MB, NB

For permanent access to device data and for device configuration via the Web server, the device is incorporated directly in a network via the service interface (CDI-RJ45). In this way, the device can be accessed any time from the control station. The measured values are processed separately via the inputs and outputs through the automation system.

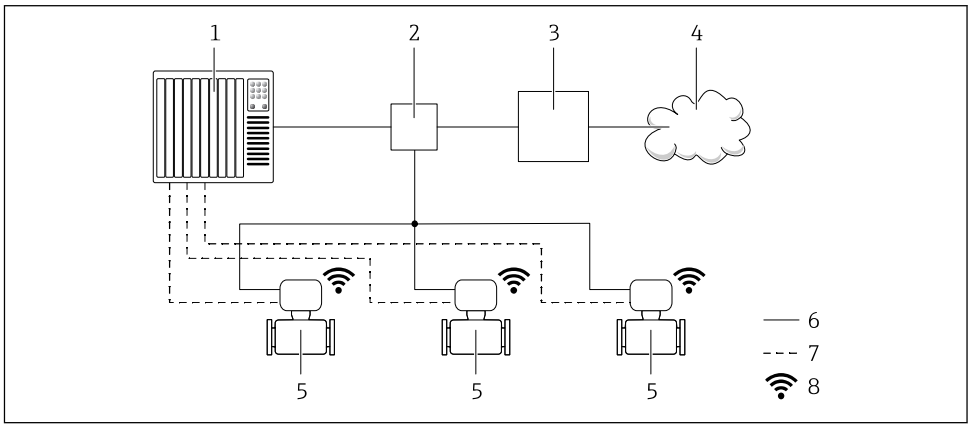

1 *Automation system, e.g. Simatic S7 (Siemens)*
2 *Ethernet switch*
3 *Edge Gateway*
4 *Cloud*
5 *Measuring device*
6 *Ethernet network*
7 *Measured values via inputs and outputs*
8 *Optional WLAN interface*

The optional WLAN interface is available on the following device version:
Order code for "Display; operation", option **G** "4-line, illuminated, graphic display; touch control + WLAN"

Special Documentation for the OPC-UA Server application package → 110.

Supported operating tools

Different operating tools can be used for local or remote access to the measuring device. Depending on the operating tool used, access is possible with different operating units and via a variety of interfaces.

Supported operating tools	Operating unit	Interface	Additional information
Web browser	Notebook, PC or tablet with Web browser	▪ CDI-RJ45 service interface ▪ WLAN interface ▪ Ethernet-based fieldbus (EtherNet/IP, PROFINET)	Special Documentation for device
DeviceCare SFE100	Notebook, PC or tablet with Microsoft Windows system	▪ CDI-RJ45 service interface ▪ WLAN interface ▪ Fieldbus protocol	→ 108

Supported operating tools	Operating unit	Interface	Additional information
FieldCare SFE500	Notebook, PC or tablet with Microsoft Windows system	▪ CDI-RJ45 service interface ▪ WLAN interface ▪ Fieldbus protocol	→ 🖹 108
Device Xpert	Field Xpert SFX 100/350/370	HART and FOUNDATION Fieldbus fieldbus protocol	Operating Instructions BA01202S Device description files: Use update function of handheld terminal

Other operating tools based on FDT technology with a device driver such as DTM/iDTM or DD/EDD can be used for device operation. These operating tools are available from the individual manufacturers. Integration into the following operating tools, among others, is supported:

- FactoryTalk AssetCentre (FTAC) by Rockwell Automation → www.rockwellautomation.com
- Process Device Manager (PDM) by Siemens → www.siemens.com
- Asset Management Solutions (AMS) by Emerson → www.emersonprocess.com
- FieldCommunicator 375/475 by Emerson → www.emersonprocess.com
- Field Device Manager (FDM) by Honeywell → www.honeywellprocess.com
- FieldMate by Yokogawa → www.yokogawa.com
- PACTWare → www.pactware.com

The associated device description files are available at: www.endress.com → Downloads

Web server

Thanks to the integrated Web server, the device can be operated and configured via a Web browser and via a service interface (CDI-RJ45) or via a WLAN interface. The structure of the operating menu is the same as for the local display. In addition to the measured values, status information on the device is also displayed and allows the user to monitor the status of the device. Furthermore the device data can be managed and the network parameters can be configured.

A device that has a WLAN interface (can be ordered as an option) is required for the WLAN connection: order code for "Display; operation", option G "4-line, illuminated; touch control + WLAN". The device acts as an Access Point and enables communication by computer or a mobile handheld terminal.

Supported functions
Data exchange between the operating unit (such as a notebook for example) and the measuring device:
- Upload the configuration from the measuring device (XML format, configuration backup)
- Save the configuration to the measuring device (XML format, restore configuration)
- Export event list (.csv file)
- Export parameter settings (.csv file or PDF file, document the measuring point configuration)
- Export the Heartbeat verification log (PDF file, only available with the "Heartbeat Verification" application package)
- Flash firmware version for device firmware upgrade, for instance
- Download driver for system integration
- Visualize up to 1000 saved measured values (only available with the **Extended HistoROM** application package → 🖹 105)

Web server special documentation → 🖹 110

HistoROM data management

The measuring device features HistoROM data management. HistoROM data management comprises both the storage and import/export of key device and process data, making operation and servicing far more reliable, secure and efficient.

When the device is delivered, the factory settings of the configuration data are stored as a backup in the device memory. This memory can be overwritten with an updated data record, for example after commissioning.

Additional information on the data storage concept

There are different types of data storage units in which device data are stored and used by the device:

	Device memory	T-DAT	S-DAT

Available data	▪ Event logbook such as diagnostic events for example
	▪ Parameter data record backup
	▪ Device firmware package
	▪ Driver for system integration for exporting via Web server, e.g:
	  ▪ GSD for PROFIBUS DP
	  ▪ GSD for PROFIBUS PA
	  ▪ GSDML for PROFINET
	  ▪ EDS for EtherNet/IP
	  ▪ DD for FOUNDATION Fieldbus
		▪ Measured value logging ("Extended HistoROM" order option)
		▪ Current parameter data record (used by firmware at run time)
		▪ Peakhold indicator (min/max values)
		▪ Totalizer values
			▪ Sensor data: nominal diameter etc.
			▪ Serial number
			▪ Calibration data
			▪ Device configuration (e.g. SW options, fixed I/O or multi I/O)

Storage location	Fixed on the user interface board in the connection compartment	Attachable to the user interface board in the connection compartment	In the sensor plug in the transmitter neck part

Data backup

Automatic
- The most important device data (sensor and transmitter) are automatically saved in the DAT modules
- If the transmitter or measuring device is replaced: once the T-DAT containing the previous device data has been exchanged, the new measuring device is ready for operation again immediately without any errors
- If the sensor is replaced: once the sensor has been replaced, new sensor data are transferred from the S-DAT in the measuring device and the measuring device is ready for operation again immediately without any errors
- If exchanging the electronics module (e.g. I/O electronics module): Once the electronics module has been replaced, the software of the module is compared against the current device firmware. The module software is upgraded or downgraded where necessary. The electronics module is available for use immediately afterwards and no compatibility problems occur.

Manual
Additional parameter data record (complete parameter settings) in the integrated device memory HistoROM backup for:
- Data backup function
  Backup and subsequent restoration of a device configuration in the device memory HistoROM backup
- Data comparison function
  Comparison of the current device configuration with the device configuration saved in the device memory HistoROM backup

Data transfer

Manual
- Transfer of a device configuration to another device using the export function of the specific operating tool, e.g. with FieldCare, DeviceCare or Web server: to duplicate the configuration or to store in an archive (e.g. for backup purposes)
- Transmission of the drivers for system integration via Web server, e.g.:
  - GSD for PROFIBUS DP
  - GSD for PROFIBUS PA
  - GSDML for PROFINET
  - EDS for EtherNet/IP
  - DD for FOUNDATION Fieldbus

Event list

Automatic
- Chronological display of up to 20 event messages in the events list
- If the **Extended HistoROM** application package (order option) is enabled: up to 100 event messages are displayed in the events list along with a time stamp, plain text description and remedial measures
- The events list can be exported and displayed via a variety of interfaces and operating tools e.g. DeviceCare, FieldCare or Web server

Data logging

Manual
If the **Extended HistoROM** application package (order option) is enabled:
- Record up to 1 000 measured values via 1 to 4 channels
- User configurable recording interval
- Record up to 250 measured values via each of the 4 memory channels
- Export the measured value log via a variety of interfaces and operating tools e.g. FieldCare, DeviceCare or web server

Certificates and approvals

Currently available certificates and approvals can be called up via the product configurator.

CE mark

The device meets the legal requirements of the applicable EU Directives. These are listed in the corresponding EU Declaration of Conformity along with the standards applied.

Endress+Hauser confirms successful testing of the device by affixing to it the CE mark.

RCM-tick symbol

The measuring system meets the EMC requirements of the "Australian Communications and Media Authority (ACMA)".

Ex approval

The measuring device is certified for use in hazardous areas and the relevant safety instructions are provided in the separate "Safety Instructions" (XA) document. Reference is made to this document on the nameplate.

The separate Ex documentation (XA) containing all the relevant explosion protection data is available from your Endress+Hauser sales center.

Proline 500 – digital

ATEX, IECEx

Currently, the following versions for use in hazardous areas are available:

Ex ia, Ex db

Transmitter		Sensor	
Category	**Type of protection**	**Category**	**Type of protection**
II(1)G	[Ex ia] IIC	II2G	Ex db ia IIC T6...T1 Gb
II3(1)G	Ex ec [ia Ga] IIC T5...T4 Gc	II2G	Ex db ia IIC T6...T1 Gb

Ex tb

Transmitter		Sensor	
Category	**Type of protection**	**Category**	**Type of protection**
II(1)D	[Ex ia] IIIC	II2D	Ex ia tb IIIC T** °C Db

Non-Ex, Ex ec

Transmitter		Sensor	
Category	**Type of protection**	**Category**	**Type of protection**
Non-Ex	Non-Ex	II3G	Ex ec ic IIC T5...T1 Gc
II3G	Ex ec IIC T5...T4 Gc	II3G	Ex ec ic IIC T5...T1 Gc

cCSAus

Currently, the following versions for use in hazardous areas are available:

IS (Ex nA, Ex i)

Transmitter	Sensor
Class I Division 2 Groups A - D	Class I, II, III Division 1 Groups A-G

NI (Ex nA)

Transmitter	Sensor
Class I Division 2 Groups A - D	

Ex nA, Ex i

Transmitter	Sensor
Class I, Zone 2 AEx/ Ex nA [ia Ga] IIC T5...T4 Gb	Class I, Zone 1 AEx/ Ex d ia IIC T6...T1 Gb

Ex nA

Transmitter	Sensor
Class I, Zone 2 AEx/ Ex nA IIC T5...T4 Gc	Class I, Zone 2 AEx/Ex nA ic IIC T5...T1 Gc

Ex tb

Transmitter	Sensor
[AEx / Ex ia] IIIC	Zone 21 AEx/ Ex ia tb IIIC T** °C Db

Proline 500

ATEX, IECEx

Currently, the following versions for use in hazardous areas are available:

Ex db eb

Category	Type of protection	
	Transmitter	Sensor
II2G	Ex db eb ia IIC T6...T4 Gb	Ex eb ia IIC T6...T1 Gb

Ex db

Category	Type of protection	
	Transmitter	Sensor
II2G	Ex db ia IIC T6...T4 Gb	Ex eb ia IIC T6...T1 Gb

Ex tb

Category	Type of protection	
	Transmitter	Sensor
II2G	Ex tb IIIC T85°C Db	Ex ia tb IIIC T** °C Db

Ex ec

Category	Type of protection	
	Transmitter	Sensor
II3G	Ex ec IIC T5...T4 Gc	Ex ec ic IIC T5...T1 Gc

cCSAus

Currently, the following versions for use in hazardous areas are available:

IS (Ex i), XP (Ex d)

Transmitter	Sensor
Class I, III, III Division 1 Groups A-G	

NI (Ex nA)

Transmitter	Sensor
Class I Division 2 Groups A - D	

Ex de

Transmitter	Sensor
Class I, Zone 1 AEx/ Ex de ia IIC T6...T4 Gb	Class I, Zone 1 AEx/Ex e ia IIC T6...T1 Gb

Ex d

Transmitter	Sensor
Class I, Zone 1 AEx/ Ex d ia IIC T6...T4 Gb	Class I, Zone 1 AEx/Ex e ia IIC T6...T1 Gb

Ex nA

Transmitter	Sensor
Class I, Zone 2 AEx/ Ex nA IIC T5...T4 Gc	Class I, Zone 2 AEx/Ex nA ic IIC T5...T1 Gc

Ex tb

Transmitter	Sensor
Zone 21 AEx/ Ex tb IIIC T85 °C Db	Zone 21 AEx/ Ex ia tb IIIC T** °C Db

Pharmaceutical compatibility

- FDA
- USP Class VI
- TSE/BSE Certificate of Suitability

Functional safety

The measuring device can be used for flow monitoring systems (min., max., range) up to SIL 2 (single-channel architecture; order code for "Additional approval", option LA) and SIL 3 (multichannel architecture with homogeneous redundancy) and is independently evaluated and certified by the TÜV in accordance with IEC 61508.

The following types of monitoring in safety equipment are possible:

Functional Safety Manual with information on the SIL device → 📄 109

HART certification

HART interface

The measuring device is certified and registered by the FieldComm Group. The measuring system meets all the requirements of the following specifications:

- Certified according to HART 7
- The device can also be operated with certified devices of other manufacturers (interoperability)

FOUNDATION Fieldbus certification

FOUNDATION Fieldbus interface

The measuring device is certified and registered by the FieldComm Group. The measuring system meets all the requirements of the following specifications:
- Certified in accordance with FOUNDATION Fieldbus H1
- Interoperability Test Kit (ITK), revision version 6.2.0 (certificate available on request)
- Physical Layer Conformance Test
- The device can also be operated with certified devices of other manufacturers (interoperability)

Certification PROFIBUS

PROFIBUS interface

The measuring device is certified and registered by the PNO (PROFIBUS User Organization Organization). The measuring system meets all the requirements of the following specifications:
- Certified in accordance with PROFIBUS PA Profile 3.02
- The device can also be operated with certified devices of other manufacturers (interoperability)

EtherNet/IP certification

The measuring device is certified and registered by the ODVA (Open Device Vendor Association). The measuring system meets all the requirements of the following specifications:
- Certified in accordance with the ODVA Conformance Test
- EtherNet/IP Performance Test
- EtherNet/IP PlugFest compliance
- The device can also be operated with certified devices of other manufacturers (interoperability)

Certification PROFINET

PROFINET interface

The measuring device is certified and registered by the PNO (PROFIBUS User Organization). The measuring system meets all the requirements of the following specifications:
- Certified according to:
  - Test specification for PROFINET devices
  - PROFINET Security Level 2 – Netload Class
- The device can also be operated with certified devices of other manufacturers (interoperability)
- The device supports PROFINET S2 system redundancy.

Radio approval

The measuring device has radio approval.

For detailed information regarding radio approval, see Special Documentation

Pressure Equipment Directive

The devices can be ordered with or without a PED approval. If a device with a PED approval is required, this must be explicitly stated in the order. For devices with nominal diameters less than or equal to DN 25 (1"), this is neither possible nor necessary.

- With the identification PED/G1/x (x = category) on the sensor nameplate, Endress+Hauser confirms conformity with the "Essential Safety Requirements" specified in Appendix I of the Pressure Equipment Directive 2014/68/EU.
- Devices bearing this marking (PED) are suitable for the following types of medium: Media in Group 1 and 2 with a vapor pressure greater than, or smaller and equal to0.5 bar (7.3 psi)
- Devices not bearing this marking (PED) are designed and manufactured according to good engineering practice. They meet the requirements of Article 4 paragraph 3 of the Pressure Equipment Directive 2014/68/EU. The range of application is indicated in tables 6 to 9 in Annex II of the Pressure Equipment Directive 2014/68/EU.

Measuring instrument approval

The measuring device is qualified to OIML R117 and has an OIML Certificate of Conformity (optional).

Additional certification

PWIS-free

PWIS = paint-wetting impairment substances

Order code for "Service":
- Option **HC**: PWIS-free (version A)
- Option **HD**: PWIS-free (version B)
- Option **HE**: PWIS-free (version C)

For more information on PWIS-free certification, see "Test specification" document TS01028D

Other standards and guidelines

- EN 60529
  Degrees of protection provided by enclosures (IP code)
- EN 61010-1
  Safety requirements for electrical equipment for measurement, control and laboratory use - general requirements
- IEC/EN 61326
  Emission in accordance with Class A requirements. Electromagnetic compatibility (EMC requirements).
- NAMUR NE 21
  Electromagnetic compatibility (EMC) of industrial process and laboratory control equipment
- NAMUR NE 32
  Data retention in the event of a power failure in field and control instruments with microprocessors
- NAMUR NE 43
  Standardization of the signal level for the breakdown information of digital transmitters with analog output signal.
- NAMUR NE 53
  Software of field devices and signal-processing devices with digital electronics
- NAMUR NE 105
  Specifications for integrating fieldbus devices in engineering tools for field devices
- NAMUR NE 107
  Self-monitoring and diagnosis of field devices
- NAMUR NE 131
  Requirements for field devices for standard applications

Ordering information

Detailed ordering information is available for your nearest sales organization www.addresses.endress.com or in the Product Configurator under www.endress.com :

1. Click Corporate
2. Select the country
3. Click Products
4. Select the product using the filters and search field
5. Open the product page

The Configuration button to the right of the product image opens the Product Configurator.

Product Configurator - the tool for individual product configuration
- Up-to-the-minute configuration data
- Depending on the device: Direct input of measuring point-specific information such as measuring range or operating language
- Automatic verification of exclusion criteria
- Automatic creation of the order code and its breakdown in PDF or Excel output format
- Ability to order directly in the Endress+Hauser Online Shop

Application packages

Many different application packages are available to enhance the functionality of the device. Such packages might be needed to address safety aspects or specific application requirements.

The application packages can be ordered with the device or subsequently from Endress+Hauser. Detailed information on the order code in question is available from your local Endress+Hauser sales center or on the product page of the Endress+Hauser website: www.endress.com.

Diagnostics functions

Package	Description
Extended HistoROM	Comprises extended functions concerning the event log and the activation of the measured value memory. Event log: Memory volume is extended from 20 message entries (standard version) to up to 100 entries. Data logging (line recorder): ▪ Memory capacity for up to 1000 measured values is activated. ▪ 250 measured values can be output via each of the 4 memory channels. The recording interval can be defined and configured by the user. ▪ Measured value logs can be accessed via the local display or operating tool e.g. FieldCare, DeviceCare or Web server.

Heartbeat Technology

Package	Description
Heartbeat Verification +Monitoring	**Heartbeat Verification** Meets the requirement for traceable verification to DIN ISO 9001:2008 Chapter 7.6 a) "Control of monitoring and measuring equipment". ▪ Functional testing in the installed state without interrupting the process. ▪ Traceable verification results on request, including a report. ▪ Simple testing process via local operation or other operating interfaces. ▪ Clear measuring point assessment (pass/fail) with high test coverage within the framework of manufacturer specifications. ▪ Extension of calibration intervals according to operator's risk assessment. **Heartbeat Monitoring** Continuously supplies data, which are characteristic of the measuring principle, to an external condition monitoring system for the purpose of preventive maintenance or process analysis. These data enable the operator to: ▪ Draw conclusions - using these data and other information - about the impact process influences (such as corrosion, abrasion, buildup etc.) have on the measuring performance over time. ▪ Schedule servicing in time. ▪ Monitor the process or product quality, e.g. gas pockets.

Cleaning

Package	Description
Electrode cleaning circuit (ECC)	The electrode cleaning circuit (ECC) function has been developed to have a solution for applications where magnetite (Fe_3O_4) deposits frequently occur (e.g. hot water). Since magnetite is highly conductive this build up leads to measuring errors and ultimately to the loss of signal. The application package is designed to AVOID build up of highly conductive matter and thin layers (typical of magnetite).

OPC-UA server

Package	Description
OPC-UA-Server	The application package provides the user with an integrated OPC-UA server for comprehensive instrument services for IoT and SCADA applications. Special Documentation for the "OPC-UA-Server" application package → 110.

Accessories

Various accessories, which can be ordered with the device or subsequently from Endress+Hauser, are available for the device. Detailed information on the order code in question is available from your local Endress+Hauser sales center or on the product page of the Endress+Hauser website: www.endress.com.

Device-specific accessories

For the transmitter

Accessories	Description
Transmitter ▪ Proline 500 – digital ▪ Proline 500	Transmitter for replacement or storage. Use the order code to define the following specifications: ▪ Approvals ▪ Output ▪ Input ▪ Display/operation ▪ Housing ▪ Software ▪ Proline 500 – digital transmitter: Order code: 5X5BXX-*********A ▪ Proline 500 transmitter: Order code: 5X5BXX-*********B Proline 500 transmitter for replacement: It is essential to specify the serial number of the current transmitter when ordering. Based on the serial number, the device-specific data (e.g., calibration factors) of the replacement device can be used for the new transmitter. ▪ Proline 500 – digital transmitter: Installation Instructions EA01151D ▪ Proline 500 transmitter: Installation Instructions EA01152D
External WLAN antenna	External WLAN antenna with 1.5 m (59.1 in) connecting cable and two angle brackets. Order code for "Accessory enclosed", option P8 "Wireless antenna wide area". ▪ The external WLAN antenna is not suitable for use in hygienic applications. ▪ Further information on the WLAN interface → 🖹 95. Order number: 71351317 Installation Instructions EA01238D
Pipe mounting set	Pipe mounting set for transmitter. Proline 500 – digital transmitter Order number: 71346427 Installation Instructions EA01195D Proline 500 transmitter Order number: 71346428
Protective cover Transmitter ▪ Proline 500 – digital ▪ Proline 500	Is used to protect the measuring device from the effects of the weather: e.g. rainwater, excess heating from direct sunlight. ▪ Proline 500 – digital transmitter Order number: 71343504 ▪ Proline 500 transmitter Order number: 71343505 Installation Instructions EA01191D
Display guard Proline 500 – digital	Is used to protect the display against impact or scoring from sand in desert areas. Order number: 71228792 Installation Instructions EA01093D
Ground cable	Set, consisting of two ground cables for potential equalization.

Connecting cable Proline 500 – digital Sensor – Transmitter	The connecting cable can be ordered directly with the measuring device (order code for "Cable, sensor connection) or as an accessory (order number DK5012). The following cable lengths are available: order code for "Cable, sensor connection" ▪ Option B: 20 m (65 ft) ▪ Option E: User configurable up to max. 50 m ▪ Option F: User configurable up to max. 165 ft Maximum possible cable length for a Proline 500 – digital connecting cable: 300 m (1 000 ft)
Connecting cable Proline 500 Sensor – Transmitter	The connecting cable can be ordered directly with the measuring device (order code for "Cable, sensor connection) or as an accessory (order number DK5012). The following cable lengths are available: order code for "Cable, sensor connection" ▪ Option 1: 5 m (16 ft) ▪ Option 2: 10 m (32 ft) ▪ Option 3: 20 m (65 ft) ▪ Option 4: User configurable cable length (m) ▪ Option 5: User configurable cable length (ft) Reinforced connecting cable with an additional, reinforcing metal braid: ▪ Option 6: User configurable cable length (m) ▪ Option 7: User configurable cable length (ft) Possible cable length for a Proline 500 connecting cable: depends on the medium conductivity, max. 200 m (660 ft)

For the sensor

Accessories	Description
Ground disks	Are used to ground the medium in lined measuring tubes to ensure proper measurement. For details, see Installation Instructions EA00070D

Communication-specific accessories

Accessories	Description
Commubox FXA195 HART	For intrinsically safe HART communication with FieldCare via the USB interface. Technical Information TI00404F
HART Loop Converter HMX50	Is used to evaluate and convert dynamic HART process variables to analog current signals or limit values. ▪ Technical Information TI00429F ▪ Operating Instructions BA00371F
Fieldgate FXA320	Gateway for the remote monitoring of connected 4-20 mA measuring devices via a Web browser. Technical Information TI00025S Operating Instructions BA00053S
Fieldgate FXA520	Gateway for the remote diagnostics and remote configuration of connected HART measuring devices via a Web browser. Technical Information TI00025S Operating Instructions BA00051S
Field Xpert SFX350	Field Xpert SFX350 is a mobile computer for commissioning and maintenance. It enables efficient device configuration and diagnostics for HART and FOUNDATION Fieldbus devices and can be used in non-hazardous areas. Operating Instructions BA01202S

Field Xpert SFX370	Field Xpert SFX370 is a mobile computer for commissioning and maintenance. It enables efficient device configuration and diagnostics for HART and FOUNDATION Fieldbus devices and can be used in the non-hazardous area and in the hazardous area. Operating Instructions BA01202S
Field Xpert SMT70	The Field Xpert SMT70 tablet PC for device configuration enables mobile plant asset management in hazardous and non-hazardous areas. It is suitable for commissioning and maintenance staff to manage field instruments with a digital communication interface and to record progress. This tablet PC is designed as an all-in-one solution with a preinstalled driver library and is an easy-to-use, touch-sensitive tool which can be used to manage field instruments throughout their entire life cycle. ▪ Technical Information TI01342S ▪ Operating Instructions BA01709S ▪ Product page: www.endress.com/smt70

Service-specific accessories

Accessories	Description
Applicator	Software for selecting and sizing Endress+Hauser measuring devices: ▪ Choice of measuring devices for industrial requirements ▪ Calculation of all the necessary data for identifying the optimum flowmeter: e.g. nominal diameter, pressure loss, flow velocity and accuracy. ▪ Graphic illustration of the calculation results ▪ Determination of the partial order code, administration, documentation and access to all project-related data and parameters over the entire life cycle of a project. Applicator is available: ▪ Via the Internet: https://portal.endress.com/webapp/applicator ▪ As a downloadable DVD for local PC installation.
W@M	W@M Life Cycle Management Improved productivity with information at your fingertips. Data relevant to a plant and its components is generated from the first stages of planning and during the asset's complete life cycle. W@M Life Cycle Management is an open and flexible information platform with online and on-site tools. Instant access for your staff to current, in-depth data shortens your plant's engineering time, speeds up procurement processes and increases plant uptime. Combined with the right services, W@M Life Cycle Management boosts productivity in every phase. For more information, visit www.endress.com/lifecyclemanagement
FieldCare	FDT-based plant asset management tool from Endress+Hauser. It can configure all smart field units in your system and helps you manage them. By using the status information, it is also a simple but effective way of checking their status and condition. Operating Instructions BA00027S and BA00059S
DeviceCare	Tool to connect and configure Endress+Hauser field devices. Innovation brochure IN01047S

System components

Accessories	Description
Memograph M graphic data manager	The Memograph M graphic data manager provides information on all the relevant measured variables. Measured values are recorded correctly, limit values are monitored and measuring points analyzed. The data are stored in the 256 MB internal memory and also on a SD card or USB stick. ▪ Technical Information TI00133R ▪ Operating Instructions BA00247R

Supplementary documentation

For an overview of the scope of the associated Technical Documentation, refer to the following:
- *W@M Device Viewer* (www.endress.com/deviceviewer): Enter the serial number from nameplate
- *Endress+Hauser Operations App*: Enter the serial number from the nameplate or scan the 2D matrix code (QR code) on the nameplate

Standard documentation

Brief Operating Instructions

Brief Operating Instructions for the sensor

Measuring device	Documentation code
Proline Promag P	KA01290D

Brief Operating Instructions for transmitter

Measuring device	Documentation code						
	HART	FOUNDATION Fieldbus	PROFIBUS PA	PROFIBUS DP	Modbus RS485	EtherNet/IP	PROFINET
Proline 500 – digital	KA01313D	KA01292D	KA01407D	KA01388D	KA01317D	KA01343D	KA01349D
Proline 500	KA01312D	KA01293D	KA01406D	KA01387D	KA01316D	KA01342D	KA01348D

Operating Instructions

Measuring device	Documentation code						
	HART	FOUNDATION Fieldbus	PROFIBUS PA	PROFIBUS DP	Modbus RS485	EtherNet/IP	PROFINET
Promag P 500	BA01399D	BA01480D	BA01405D	BA01867D	BA01402D	BA01721D	BA01724D

Description of Device Parameters

Measuring device	Documentation code						
	HART	FOUNDATION Fieldbus	PROFIBUS PA	PROFIBUS DP	Modbus RS485	EtherNet/IP	PROFINET
Promag 500	GP01054D	GP01099D	GP01056D	GP01136D	GP01055D	GP01118D	GP01119D

Device-dependent additional documentation

Safety instructions

Safety instructions for electrical equipment for hazardous areas.

Contents	Documentation code
ATEX/IECEx Ex i	XA01522D
ATEX/IECEx Ex ec	XA01523D
cCSAus IS	XA01524D
cCSAus Ex e ia/Ex d ia	XA01525D
cCSAus Ex nA	XA01526D
INMETRO Ex i	XA01527D
INMETRO Ex ec	XA01528D
NEPSI Ex i	XA01529D
NEPSI Ex nA	XA01530D
EAC Ex i	XA01658D

Contents	Documentation code
EAC Ex nA	XA01659D
JPN	XA01776D

Special Documentation

Contents	Documentation code
Information on the Pressure Equipment Directive	SD01614D
Functional Safety Manual	SD01741D
Radio approvals for WLAN interface for A309/A310 display module	SD01793D
OPC-UA Server [1)]	SD02044D

1) This Special Documentation is only available for device versions with a HART output.

Contents	Documentation code						
	HART	FOUNDATION Fieldbus	PROFIBUS PA	PROFIBUS DP	Modbus RS485	PROFINET	EtherNet/IP
Heartbeat Technology	SD01641D	SD01745D	SD01747D	SD02207D	SD01746D	SD01987D	SD01981D
Web server	SD01658D	SD01661D	SD01660D	SD02236D	SD01659D	SD01979D	SD01978D

Installation Instructions

Content	Comment
Installation instructions for spare part sets and accessories	Documentation code: specified for each individual accessory → 🖹 106.

Registered trademarks

HART®
Registered trademark of the FieldComm Group, Austin, Texas, USA

PROFIBUS®
Registered trademark of the PROFIBUS User Organization, Karlsruhe, Germany

FOUNDATION™ Fieldbus
Registration-pending trademark of the FieldComm Group, Austin, Texas, USA

Modbus®
Registered trademark of SCHNEIDER AUTOMATION, INC.

EtherNet/IP™
Trademark of ODVA, Inc.

PROFINET®
Registered trademark of the PROFIBUS User Organization, Karlsruhe, Germany

BA01399D/06/EN/05.20
71491356
2020-08-14

Valid as of version
01.05.zz (Device firmware)

Operating Instructions
Proline Promag P 500
HART

Electromagnetic flowmeter

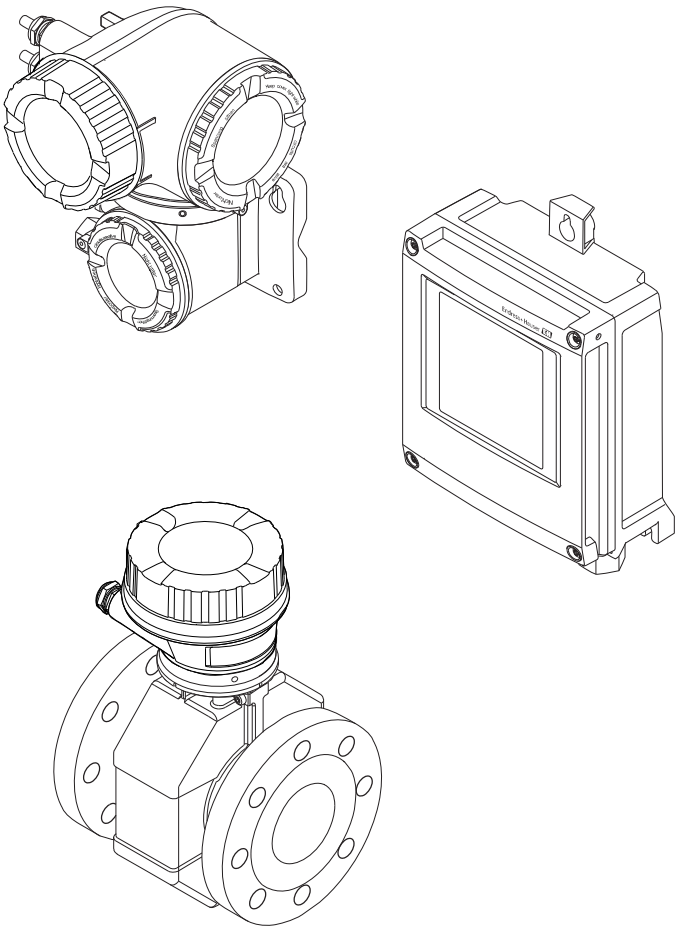

Endress+Hauser
People for Process Automation

- Make sure the document is stored in a safe place such that it is always available when working on or with the device.
- To avoid danger to individuals or the facility, read the "Basic safety instructions" section carefully, as well as all other safety instructions in the document that are specific to working procedures.
- The manufacturer reserves the right to modify technical data without prior notice. Your Endress+Hauser Sales Center will supply you with current information and updates to these instructions.

Table of contents

1 About this document 6
1.1 Document function 6
1.2 Symbols 6
1.2.1 Safety symbols 6
1.2.2 Electrical symbols 6
1.2.3 Communication symbols 6
1.2.4 Tool symbols 7
1.2.5 Symbols for certain types of information 7
1.2.6 Symbols in graphics 7
1.3 Documentation 8
1.3.1 Standard documentation 8
1.3.2 Supplementary device-dependent documentation 8
1.4 Registered trademarks 8

2 Safety instructions 9
2.1 Requirements for the personnel 9
2.2 Designated use 9
2.3 Workplace safety 10
2.4 Operational safety 10
2.5 Product safety 10
2.6 IT security 11
2.7 Device-specific IT security 11
2.7.1 Protecting access via hardware write protection 11
2.7.2 Protecting access via a password 11
2.7.3 Access via Web server 12
2.7.4 Access via OPC-UA 13
2.7.5 Access via service interface (CDI-RJ45) 13

3 Product description 14
3.1 Product design 14
3.1.1 Proline 500 – digital 14
3.1.2 Proline 500 15

4 Incoming acceptance and product identification 16
4.1 Incoming acceptance 16
4.2 Product identification 16
4.2.1 Transmitter nameplate 17
4.2.2 Sensor nameplate 19
4.2.3 Symbols on measuring device 20

5 Storage and transport 21
5.1 Storage conditions 21
5.2 Transporting the product 21
5.2.1 Measuring devices without lifting lugs 21
5.2.2 Measuring devices with lifting lugs . . 22
5.2.3 Transporting with a fork lift 22
5.3 Packaging disposal 22

6 Installation 23
6.1 Installation conditions 23
6.1.1 Mounting position 23
6.1.2 Environment and process requirements 25
6.1.3 Special mounting instructions 28
6.2 Mounting the measuring device 28
6.2.1 Required tools 28
6.2.2 Preparing the measuring device 29
6.2.3 Mounting the sensor 29
6.2.4 Mounting the transmitter housing: Proline 500 – digital 33
6.2.5 Mounting the transmitter housing: Proline 500 35
6.2.6 Turning the transmitter housing: Proline 500 36
6.2.7 Turning the display module: Proline 500 37
6.3 Post-installation check 37

7 Electrical connection 38
7.1 Connection conditions 38
7.1.1 Required tools 38
7.1.2 Requirements for connecting cable . . . 38
7.1.3 Terminal assignment 42
7.1.4 Preparing the measuring device 43
7.1.5 Preparing the connecting cable: Proline 500 – digital 44
7.1.6 Preparing the connecting cable: Proline 500 44
7.2 Connecting the measuring device: Proline 500 - digital 46
7.2.1 Connecting the connecting cable 46
7.2.2 Connecting the signal cable and the supply voltage cable 49
7.3 Connecting the measuring device: Proline 500 51
7.3.1 Connecting the connecting cable 51
7.3.2 Connecting the signal cable and the supply voltage cable 54
7.4 Ensuring potential equalization 56
7.4.1 Requirements 56
7.4.2 Connection example, standard scenario 56
7.4.3 Connection example in special situations 56
7.5 Special connection instructions 58
7.5.1 Connection examples 58
7.6 Ensuring the degree of protection 62
7.7 Post-connection check 63

8 Operation options 64
8.1 Overview of operation options 64
8.2 Structure and function of the operating menu 65
8.2.1 Structure of the operating menu 65
8.2.2 Operating philosophy 66
8.3 Access to the operating menu via the local display 67
8.3.1 Operational display 67
8.3.2 Navigation view 68
8.3.3 Editing view 70
8.3.4 Operating elements 72
8.3.5 Opening the context menu 72
8.3.6 Navigating and selecting from list . . . 74
8.3.7 Calling the parameter directly 74
8.3.8 Calling up help text 75
8.3.9 Changing the parameters 75
8.3.10 User roles and related access authorization 76
8.3.11 Disabling write protection via access code 76
8.3.12 Enabling and disabling the keypad lock 77
8.4 Access to the operating menu via the Web browser 77
8.4.1 Function range 77
8.4.2 Prerequisites 78
8.4.3 Establishing a connection 79
8.4.4 Logging on 81
8.4.5 User interface 82
8.4.6 Disabling the Web server 83
8.4.7 Logging out 83
8.5 Access to the operating menu via the operating tool 84
8.5.1 Connecting the operating tool 84
8.5.2 Field Xpert SFX350, SFX370 88
8.5.3 FieldCare 88
8.5.4 DeviceCare 89
8.5.5 AMS Device Manager 89
8.5.6 SIMATIC PDM 90
8.5.7 Field Communicator 475 90

9 System integration 91
9.1 Overview of device description files 91
9.1.1 Current version data for the device . . . 91
9.1.2 Operating tools 91
9.2 Measured variables via HART protocol 91
9.3 Other settings 93

10 Commissioning 95
10.1 Function check 95
10.2 Switching on the measuring device 95
10.3 Setting the operating language 95
10.4 Configuring the measuring device 95
10.4.1 Defining the tag name 97
10.4.2 Setting the system units 97
10.4.3 Displaying the I/O configuration 99
10.4.4 Configuring the status input 100
10.4.5 Configuring the current input 101
10.4.6 Configuring the current output 102
10.4.7 Configuring the pulse/frequency/switch output 105
10.4.8 Configuring the local display 111
10.4.9 Configuring the low flow cut off 113
10.4.10 Configuring empty pipe detection . . 114
10.4.11 Configuring the HART input 114
10.4.12 Configuring the relay output 116
10.4.13 Configuring the double pulse output 118
10.5 Advanced settings 120
10.5.1 Using the parameter to enter the access code 121
10.5.2 Carrying out a sensor adjustment . . . 121
10.5.3 Configuring the totalizer 121
10.5.4 Carrying out additional display configurations 123
10.5.5 Performing electrode cleaning 126
10.5.6 WLAN configuration 127
10.5.7 Configuration management 128
10.5.8 Using parameters for device administration 130
10.6 Simulation 131
10.7 Protecting settings from unauthorized access 134
10.7.1 Write protection via access code . . . 134
10.7.2 Write protection via write protection switch 135

11 Operation 138
11.1 Reading the device locking status 138
11.2 Adjusting the operating language 138
11.3 Configuring the display 138
11.4 Reading measured values 138
11.4.1 "Process variables" submenu 138
11.4.2 "Totalizer" submenu 139
11.4.3 "Input values" submenu 140
11.4.4 Output values 141
11.5 Adapting the measuring device to the process conditions 143
11.6 Performing a totalizer reset 143
11.6.1 Function scope of the "Control Totalizer" parameter 144
11.6.2 Function scope of the "Reset all totalizers" parameter 144
11.7 Showing data logging 144

12 Diagnostics and troubleshooting . . 148
12.1 General troubleshooting 148
12.2 Diagnostic information via light emitting diodes 150
12.2.1 Transmitter 150
12.2.2 Sensor connection housing 152
12.3 Diagnostic information on local display 154
12.3.1 Diagnostic message 154
12.3.2 Calling up remedial measures 156

12.4 Diagnostic information in the Web browser . 156
12.4.1 Diagnostic options 156
12.4.2 Calling up remedy information 157
12.5 Diagnostic information in FieldCare or DeviceCare 158
12.5.1 Diagnostic options 158
12.5.2 Calling up remedy information 159
12.6 Adapting the diagnostic information 159
12.6.1 Adapting the diagnostic behavior . . . 159
12.6.2 Adapting the status signal 159
12.7 Overview of diagnostic information 160
12.8 Pending diagnostic events 164
12.9 Diagnostic list 165
12.10 Event logbook 165
12.10.1 Reading out the event logbook 165
12.10.2 Filtering the event logbook 166
12.10.3 Overview of information events 166
12.11 Resetting the measuring device 168
12.11.1 Function scope of the "Device reset" parameter 168
12.12 Device information 168
12.13 Firmware history 171
12.14 Device history and compatibility 172

13 Maintenance 173
13.1 Maintenance tasks 173
13.1.1 Exterior cleaning 173
13.1.2 Interior cleaning 173
13.1.3 Replacing seals 173
13.2 Measuring and test equipment 173
13.3 Endress+Hauser services 173

14 Repair 174
14.1 General notes 174
14.1.1 Repair and conversion concept 174
14.1.2 Notes for repair and conversion 174
14.2 Spare parts 174
14.3 Endress+Hauser services 174
14.4 Return 174
14.5 Disposal 174
14.5.1 Removing the measuring device 174
14.5.2 Disposing of the measuring device . . 175

15 Accessories 176
15.1 Device-specific accessories 176
15.1.1 For the transmitter 176
15.1.2 For the sensor 177
15.2 Communication-specific accessories 177
15.3 Service-specific accessories 178
15.4 System components 179

16 Technical data 180
16.1 Application 180
16.2 Function and system design 180
16.3 Input 180
16.4 Output 184
16.5 Power supply 190
16.6 Performance characteristics 191
16.7 Installation 192
16.8 Environment 192
16.9 Process 193
16.10 Mechanical construction 196
16.11 Human interface 201
16.12 Certificates and approvals 204
16.13 Application packages 206
16.14 Accessories 207
16.15 Supplementary documentation 207

Index 210

1 About this document

1.1 Document function

These Operating Instructions contain all the information that is required in various phases of the life cycle of the device: from product identification, incoming acceptance and storage, to mounting, connection, operation and commissioning through to troubleshooting, maintenance and disposal.

1.2 Symbols

1.2.1 Safety symbols

⚠ DANGER
This symbol alerts you to a dangerous situation. Failure to avoid this situation will result in serious or fatal injury.

⚠ WARNING
This symbol alerts you to a dangerous situation. Failure to avoid this situation can result in serious or fatal injury.

⚠ CAUTION
This symbol alerts you to a dangerous situation. Failure to avoid this situation can result in minor or medium injury.

NOTICE
This symbol contains information on procedures and other facts which do not result in personal injury.

1.2.2 Electrical symbols

Symbol	Meaning
⎓	Direct current
~	Alternating current
⎓ ~	Direct current and alternating current
⏚	**Ground connection** A grounded terminal which, as far as the operator is concerned, is grounded via a grounding system.
⊕	**Protective Earth (PE)** A terminal which must be connected to ground prior to establishing any other connections. The ground terminals are situated inside and outside the device: ▪ Inner ground terminal: Connects the protectiv earth to the mains supply. ▪ Outer ground terminal: Connects the device to the plant grounding system.

1.2.3 Communication symbols

Symbol	Meaning
	Wireless Local Area Network (WLAN) Communication via a wireless, local network.
	LED Light emitting diode is off.

Symbol	Meaning
	**LED** Light emitting diode is on.
	**LED** Light emitting diode is flashing.

1.2.4 Tool symbols

Symbol	Meaning
	Torx screwdriver
	Phillips head screwdriver
	Open-ended wrench

1.2.5 Symbols for certain types of information

Symbol	Meaning
	**Permitted** Procedures, processes or actions that are permitted.
	**Preferred** Procedures, processes or actions that are preferred.
	**Forbidden** Procedures, processes or actions that are forbidden.
	**Tip** Indicates additional information.
	Reference to documentation.
	Reference to page.
	Reference to graphic.
	Notice or individual step to be observed.
1., 2., 3...	Series of steps.
	Result of a step.
	Help in the event of a problem.
	Visual inspection.

1.2.6 Symbols in graphics

Symbol	Meaning
1, 2, 3, ...	Item numbers
1., 2., 3., ...	Series of steps
A, B, C, ...	Views
A-A, B-B, C-C, ...	Sections
	Hazardous area

Symbol	Meaning
	Safe area (non-hazardous area)
	Flow direction

1.3 Documentation

For an overview of the scope of the associated Technical Documentation, refer to the following:
- *W@M Device Viewer* (www.endress.com/deviceviewer): Enter the serial number from nameplate
- *Endress+Hauser Operations App*: Enter the serial number from the nameplate or scan the 2D matrix code (QR code) on the nameplate

Detailed list of the individual documents along with the documentation code
→ 207

1.3.1 Standard documentation

Document type	Purpose and content of the document
Technical Information	**Planning aid for your device** The document contains all the technical data on the device and provides an overview of the accessories and other products that can be ordered for the device.
Sensor Brief Operating Instructions	**Guides you quickly to the 1st measured value - Part 1** The Sensor Brief Operating Instructions are aimed at specialists with responsibility for installing the measuring device. ▪ Incoming acceptance and product identification ▪ Storage and transport ▪ Installation
Transmitter Brief Operating Instructions	**Guides you quickly to the 1st measured value - Part 2** The Transmitter Brief Operating Instructions are aimed at specialists with responsibility for commissioning, configuring and parameterizing the measuring device (until the first measured value). ▪ Product description ▪ Installation ▪ Electrical connection ▪ Operation options ▪ System integration ▪ Commissioning ▪ Diagnostic information
Description of Device Parameters	**Reference for your parameters** The document provides a detailed explanation of each individual parameter in the Expert operating menu. The description is aimed at those who work with the device over the entire life cycle and perform specific configurations.

1.3.2 Supplementary device-dependent documentation

Additional documents are supplied depending on the device version ordered: Always comply strictly with the instructions in the supplementary documentation. The supplementary documentation is an integral part of the device documentation.

1.4 Registered trademarks

HART®
Registered trademark of the FieldComm Group, Austin, Texas, USA

2 Safety instructions

2.1 Requirements for the personnel

The personnel for installation, commissioning, diagnostics and maintenance must fulfill the following requirements:
- Trained, qualified specialists must have a relevant qualification for this specific function and task.
- Are authorized by the plant owner/operator.
- Are familiar with federal/national regulations.
- Before starting work, read and understand the instructions in the manual and supplementary documentation as well as the certificates (depending on the application).
- Follow instructions and comply with basic conditions.

The operating personnel must fulfill the following requirements:
- Are instructed and authorized according to the requirements of the task by the facility's owner-operator.
- Follow the instructions in this manual.

2.2 Designated use

Application and media
The measuring device described in these Brief Operating Instructions is intended only for flow measurement of liquids with a minimum conductivity of 5 µS/cm.

Depending on the version ordered, the measuring device can also measure potentially explosive, flammable, poisonous and oxidizing media.

Measuring devices for use in hazardous areas, in hygienic applications or where there is an increased risk due to process pressure, are labeled accordingly on the nameplate.

To ensure that the measuring device remains in proper condition for the operation time:
- Keep within the specified pressure and temperature range.
- Only use the measuring device in full compliance with the data on the nameplate and the general conditions listed in the Operating Instructions and supplementary documentation.
- Based on the nameplate, check whether the ordered device is permitted for the intended use in the hazardous area (e.g. explosion protection, pressure vessel safety).
- Use the measuring device only for media to which the process-wetted materials are sufficiently resistant.
- If the ambient temperature of the measuring device is outside the atmospheric temperature, it is absolutely essential to comply with the relevant basic conditions as specified in the device documentation. → 8
- Protect the measuring device permanently against corrosion from environmental influences.

Incorrect use
Non-designated use can compromise safety. The manufacturer is not liable for damage caused by improper or non-designated use.

⚠ WARNING

Danger of breakage due to corrosive or abrasive fluids and ambient conditions!
- Verify the compatibility of the process fluid with the sensor material.
- Ensure the resistance of all fluid-wetted materials in the process.
- Keep within the specified pressure and temperature range.

NOTICE

Verification for borderline cases:

- For special fluids and fluids for cleaning, Endress+Hauser is glad to provide assistance in verifying the corrosion resistance of fluid-wetted materials, but does not accept any warranty or liability as minute changes in the temperature, concentration or level of contamination in the process can alter the corrosion resistance properties.

Residual risks

WARNING

The electronics and the medium may cause the surfaces to heat up. This presents a burn hazard!

- For elevated fluid temperatures, ensure protection against contact to prevent burns.

2.3 Workplace safety

For work on and with the device:

- Wear the required personal protective equipment according to federal/national regulations.

For welding work on the piping:

- Do not ground the welding unit via the measuring device.

If working on and with the device with wet hands:

- Due to the increased risk of electric shock, gloves must be worn.

2.4 Operational safety

Risk of injury.

- Operate the device in proper technical condition and fail-safe condition only.
- The operator is responsible for interference-free operation of the device.

Conversions to the device

Unauthorized modifications to the device are not permitted and can lead to unforeseeable dangers.

- If, despite this, modifications are required, consult with Endress+Hauser.

Repair

To ensure continued operational safety and reliability,

- Carry out repairs on the device only if they are expressly permitted.
- Observe federal/national regulations pertaining to repair of an electrical device.
- Use original spare parts and accessories from Endress+Hauser only.

2.5 Product safety

This measuring device is designed in accordance with good engineering practice to meet state-of-the-art safety requirements, has been tested, and left the factory in a condition in which it is safe to operate.

It meets general safety standards and legal requirements. It also complies with the EU directives listed in the device-specific EU Declaration of Conformity. Endress+Hauser confirms this by affixing the CE mark to the device.

2.6 IT security

Our warranty is valid only if the device is installed and used as described in the Operating Instructions. The device is equipped with security mechanisms to protect it against any inadvertent changes to the settings.

IT security measures, which provide additional protection for the device and associated data transfer, must be implemented by the operators themselves in line with their security standards.

2.7 Device-specific IT security

The device offers a range of specific functions to support protective measures on the operator's side. These functions can be configured by the user and guarantee greater in-operation safety if used correctly. An overview of the most important functions is provided in the following section.

Function/interface	Factory setting	Recommendation
Write protection via hardware write protection switch → 🖹 11	Not enabled.	On an individual basis following risk assessment.
Access code (also applies for Web server login or FieldCare connection) → 🖹 12	Not enabled (0000).	Assign a customized access code during commissioning.
WLAN (order option in display module)	Enabled.	On an individual basis following risk assessment.
WLAN security mode	Enabled (WPA2-PSK)	Do not change.
WLAN passphrase (password) → 🖹 12	Serial number	Assign an individual WLAN passphrase during commissioning.
WLAN mode	Access Point	On an individual basis following risk assessment.
Web server→ 🖹 12	Enabled.	On an individual basis following risk assessment.
CDI-RJ45 service interface → 🖹 13	–	On an individual basis following risk assessment.

2.7.1 Protecting access via hardware write protection

Write access to the device parameters via the local display, Web browser or operating tool (e.g. FieldCare, DeviceCare) can be disabled via a write protection switch (DIP switch on the motherboard). When hardware write protection is enabled, only read access to the parameters is possible.

Hardware write protection is disabled when the device is delivered → 🖹 135.

2.7.2 Protecting access via a password

Different passwords are available to protect write access to the device parameters or access to the device via the WLAN interface.

- User-specific access code
  Protect write access to the device parameters via the local display, Web browser or operating tool (e.g. FieldCare, DeviceCare). Access authorization is clearly regulated through the use of a user-specific access code.
- WLAN passphrase
  The network key protects a connection between an operating unit (e.g. notebook or tablet) and the device via the WLAN interface which can be ordered as an option.
- Infrastructure mode
  When the device is operated in infrastructure mode, the WLAN passphrase corresponds to the WLAN passphrase configured on the operator side.

User-specific access code

Write access to the device parameters via the local display, Web browser or operating tool (e.g. FieldCare, DeviceCare) can be protected by the modifiable, user-specific access code (→ 🖹 134).

When the device is delivered, the device does not have an access code and is equivalent to *0000* (open).

WLAN passphrase: Operation as WLAN access point

A connection between an operating unit (e.g. notebook or tablet) and the device via the WLAN interface (→ 🖹 86), which can be ordered as an optional extra, is protected by the network key. The WLAN authentication of the network key complies with the IEEE 802.11 standard.

When the device is delivered, the network key is pre-defined depending on the device. It can be changed via the **WLAN settings** submenu in the **WLAN passphrase** parameter (→ 🖹 128).

Infrastructure mode

A connection between the device and WLAN access point is protected by means of an SSID and passphrase on the system side. Please contact the relevant system administrator for access.

General notes on the use of passwords

- The access code and network key supplied with the device should be changed during commissioning.
- Follow the general rules for generating a secure password when defining and managing the access code or network key.
- The user is responsible for the management and careful handling of the access code and network key.
- For information on configuring the access code or on what to do if you lose the password, see the "Write protection via access code" section → 🖹 134

2.7.3 Access via Web server

The device can be operated and configured via a Web browser with the integrated Web server (→ 🖹 77). The connection is via the service interface (CDI-RJ45) or the WLAN interface.

The Web server is enabled when the device is delivered. The Web server can be disabled if necessary (e.g. after commissioning) via the **Web server functionality** parameter.

The device and status information can be hidden on the login page. This prevents unauthorized access to the information.

For detailed information on device parameters, see:
The "Description of Device Parameters" document → 🖹 208.

2.7.4 Access via OPC-UA

The device can communicate with OPC UA clients using the "OPC UA Server" application package.

The OPC UA server integrated in the device can be accessed via the WLAN access point using the WLAN interface - which can be ordered as an optional extra - or the service interface (CDI- RJ45) via Ethernet network. Access rights and authorization as per separate configuration.

The following Security Modes are supported as per the OPC UA Specification (IEC 62541):
- None
- Basic128Rsa15 – signed
- Basic128Rsa15 – signed and encrypted

2.7.5 Access via service interface (CDI-RJ45)

The device can be connected to a network via the service interface (CDI-RJ45). Device-specific functions guarantee the secure operation of the device in a network.

The use of relevant industrial standards and guidelines that have been defined by national and international safety committees, such as IEC/ISA62443 or the IEEE, is recommended. This includes organizational security measures such as the assignment of access authorization as well as technical measures such as network segmentation.

Transmitters with an Ex de approval may not be connected via the service interface (CDI-RJ45)!

Order code for "Approval transmitter + sensor", options (Ex de): BA, BB, C1, C2, GA, GB, MA, MB, NA, NB

3 Product description

The measuring system consists of a transmitter and a sensor. The transmitter and sensor are mounted in physically separate locations. They are interconnected by connecting cables.

3.1 Product design

Two versions of the transmitter are available.

3.1.1 Proline 500 – digital

Signal transmission: digital
Order code for "Integrated ISEM electronics", option **A** "Sensor"

For use in applications not required to meet special requirements due to ambient or operating conditions.

As the electronics are located in the sensor, the device is ideal:
For simple transmitter replacement.

- A standard cable can be used as the connecting cable.
- Not sensitive to external EMC interference.

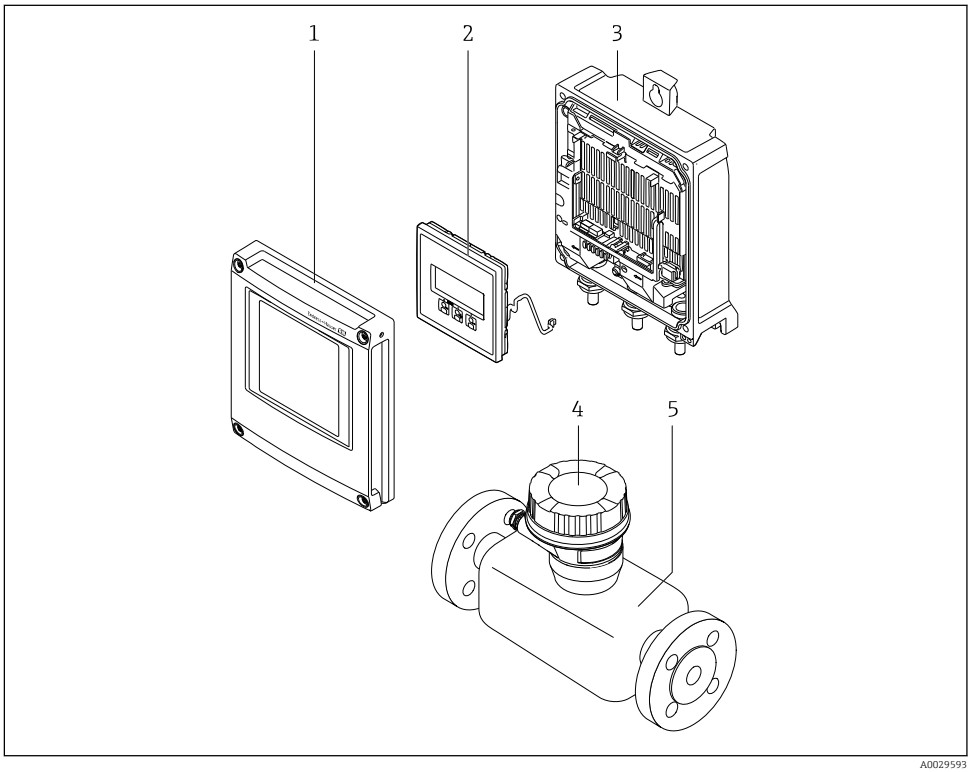

1 Important components of a measuring device

1 Electronics compartment cover
2 Display module
3 Transmitter housing
4 Sensor connection housing with integrated ISEM electronics: connecting cable connection
5 Sensor

3.1.2 Proline 500

Signal transmission: analog
Order code for "Integrated ISEM electronics", option **B** "Transmitter"

For use in applications required to meet special requirements due to ambient or operating conditions.

As the electronics are located in the transmitter, the device is ideal in the event of:
- Sensor operation in underground installations.
- Permanent sensor immersion in water.

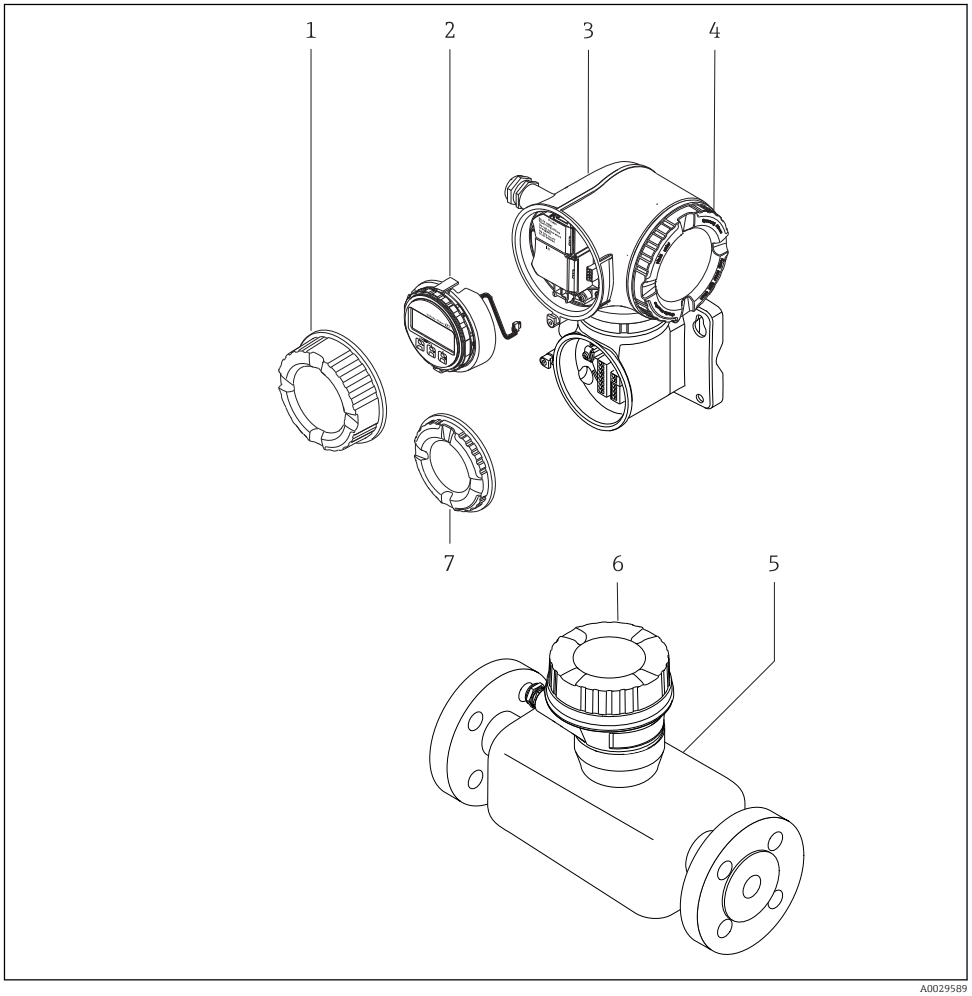

2 Important components of a measuring device

1 Connection compartment cover
2 Display module
3 Transmitter housing with integrated ISEM electronics
4 Electronics compartment cover
5 Sensor
6 Sensor connection housing: connecting cable connection
7 Connection compartment cover: connecting cable connection

4 Incoming acceptance and product identification

4.1 Incoming acceptance

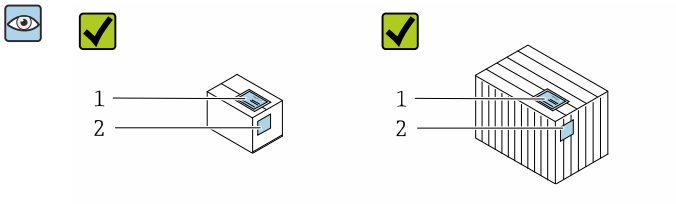

Are the order codes on the delivery note (1) and the product sticker (2) identical?

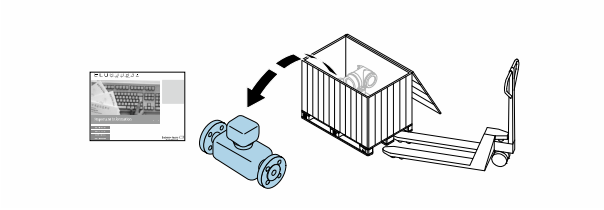



Are the goods undamaged?

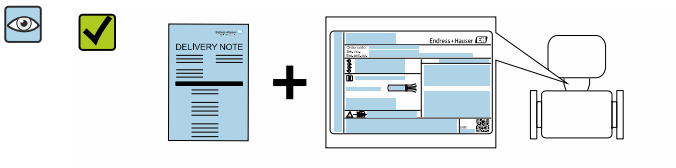

Do the nameplate data match the ordering information on the delivery note?

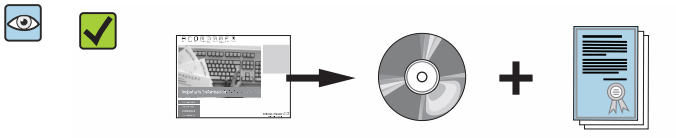

Is the document folder present with accompanying documents?
Is the optional CD-ROM with the Technical Documentation present?

- If one of the conditions is not satisfied, contact your Endress+Hauser Sales Center.
- Depending on the device version, the CD-ROM might not be part of the delivery! The Technical Documentation is available via the Internet or via the *Endress+Hauser Operations App*, see the "Product identification" section → 17.

4.2 Product identification

The following options are available for identification of the device:
- Nameplate specifications
- Order code with breakdown of the device features on the delivery note
- Enter serial numbers from nameplates in the *W@M Device Viewer* (www.endress.com/deviceviewer): All information about the device is displayed.
- Enter the serial number from nameplates in the *Endress+Hauser Operations App* or scan the 2-D matrix code (QR code) on the nameplate using the *Endress+Hauser Operations App*: All information about the device is displayed.

For an overview of the scope of the associated Technical Documentation, refer to the following:
- The "Additional standard documentation on the device"→ 📄 8 and "Supplementary device-dependent documentation"→ 📄 8 sections
- The *W@M Device Viewer*: enter the serial number from the nameplate (www.endress.com/deviceviewer)
- The *Endress+Hauser Operations App*: Enter the serial number from the nameplate or scan the 2-D matrix code (QR code) on the nameplate.

4.2.1 Transmitter nameplate

Proline 500 – digital

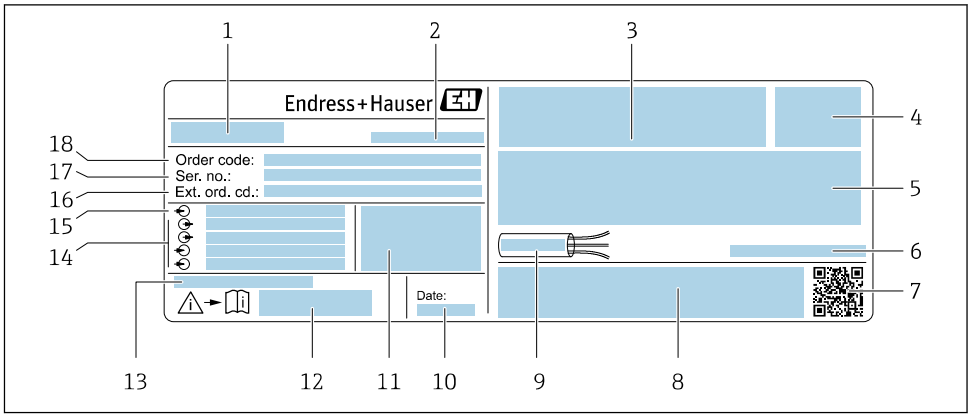

3 *Example of a transmitter nameplate*

1 *Name of the transmitter*
2 *Manufacturing location*
3 *Space for approvals: use in hazardous areas*
4 *Degree of protection*
5 *Electrical connection data: available inputs and outputs*
6 *Permitted ambient temperature (T_a)*
7 *2-D matrix code*
8 *Space for approvals and certificates: e.g. CE mark, C-Tick*
9 *Permitted temperature range for cable*
10 *Manufacturing date: year-month*
11 *Firmware version (FW) and device revision (Dev.Rev.) from the factory*
12 *Document number of safety-related supplementary documentation*
13 *Space for additional information in the case of special products*
14 *Available inputs and outputs, supply voltage*
15 *Electrical connection data: supply voltage*
16 *Extended order code (ext. ord. cd.)*
17 *Serial number (ser. no.)*
18 *Order code*

Proline 500

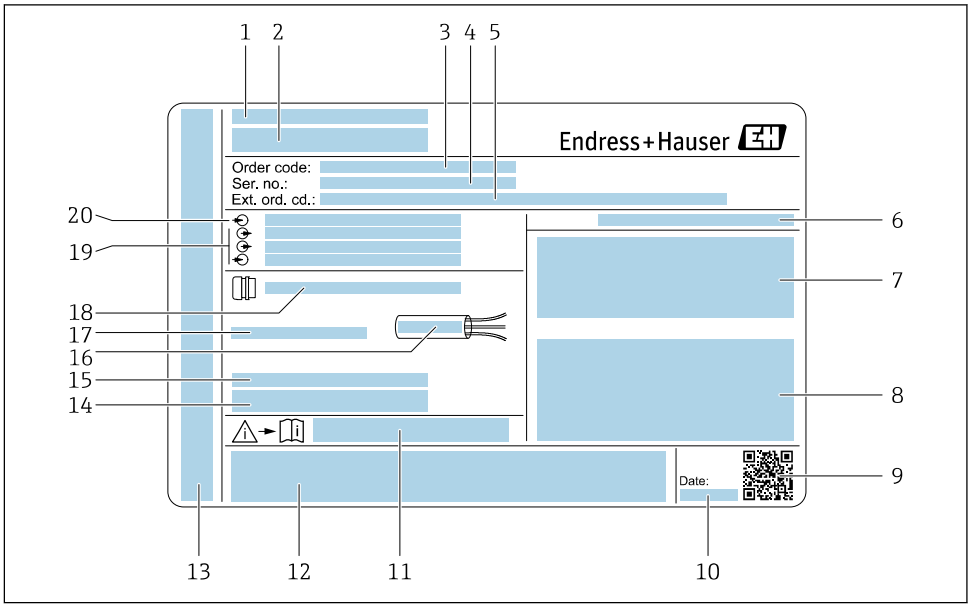

4 *Example of a transmitter nameplate*

1 *Manufacturing location*
2 *Name of the transmitter*
3 *Order code*
4 *Serial number (ser. no.)*
5 *Extended order code (ext. ord. cd.)*
6 *Degree of protection*
7 *Space for approvals: use in hazardous areas*
8 *Electrical connection data: available inputs and outputs*
9 *2-D matrix code*
10 *Manufacturing date: year-month*
11 *Document number of safety-related supplementary documentation*
12 *Space for approvals and certificates: e.g. CE mark, C-Tick*
13 *Space for degree of protection of connection and electronics compartment when used in hazardous areas*
14 *Firmware version (FW) and device revision (Dev.Rev.) from the factory*
15 *Space for additional information in the case of special products*
16 *Permitted temperature range for cable*
17 *Permitted ambient temperature (T_a)*
18 *Information on cable gland*
19 *Available inputs and outputs, supply voltage*
20 *Electrical connection data: supply voltage*

4.2.2 Sensor nameplate

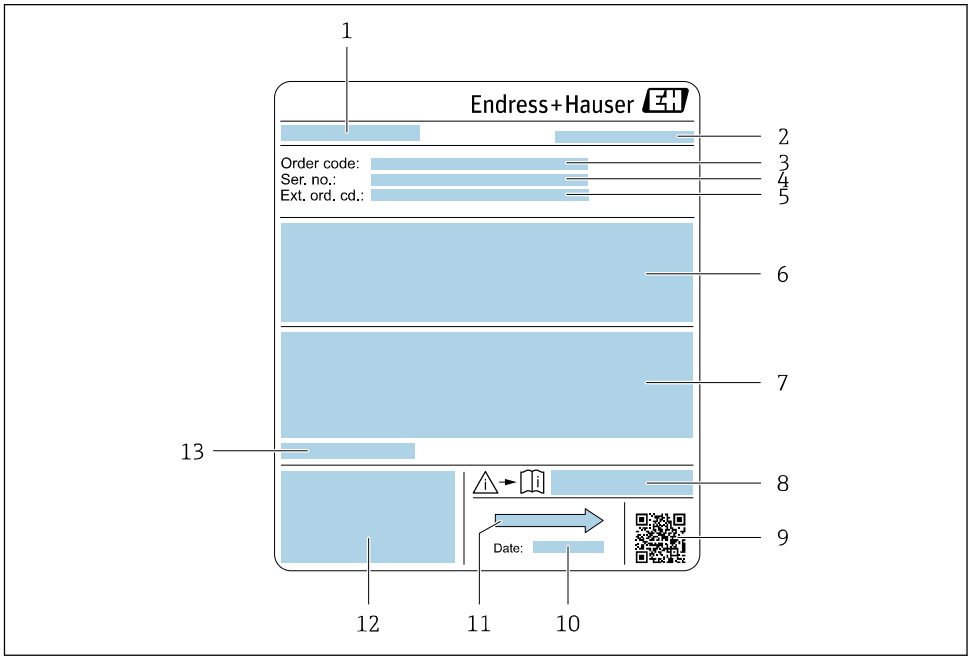

5 *Example of sensor nameplate*

1 *Name of the sensor*
2 *Manufacturing location*
3 *Order code*
4 *Serial number (ser. no.)*
5 *Extended order code (Ext. ord. cd.)*
6 *Flow; nominal diameter of the sensor; pressure rating; nominal pressure; system pressure; fluid temperature range; material of liner and electrodes*
7 *Approval information for explosion protection, Pressure Equipment Directive and degree of protection*
8 *Document number of safety-related supplementary documentation*
9 *2-D matrix code*
10 *Manufacturing date: year-month*
11 *Flow direction*
12 *CE mark, C-Tick*
13 *Permitted ambient temperature (T_a)*

Order code

The measuring device is reordered using the order code.

Extended order code

- The device type (product root) and basic specifications (mandatory features) are always listed.
- Of the optional specifications (optional features), only the safety and approval-related specifications are listed (e.g. LA). If other optional specifications are also ordered, these are indicated collectively using the # placeholder symbol (e.g. #LA#).
- If the ordered optional specifications do not include any safety and approval-related specifications, they are indicated by the + placeholder symbol (e.g. XXXXXX-ABCDE +).

4.2.3 Symbols on measuring device

Symbol	Meaning
	**WARNING!** This symbol alerts you to a dangerous situation. Failure to avoid this situation can result in serious or fatal injury.
	**Reference to documentation** Refers to the corresponding device documentation.
	**Protective ground connection** A terminal which must be connected to ground prior to establishing any other connections.

5 Storage and transport

5.1 Storage conditions

Observe the following notes for storage:
- Store in the original packaging to ensure protection from shock.
- Do not remove protective covers or protective caps installed on process connections. They prevent mechanical damage to the sealing surfaces and contamination in the measuring tube.
- Protect from direct sunlight to avoid unacceptably high surface temperatures.
- Select a storage location where moisture cannot collect in the measuring device as fungus and bacteria infestation can damage the lining.
- Store in a dry and dust-free place.
- Do not store outdoors.

Storage temperature→ 192

5.2 Transporting the product

Transport the measuring device to the measuring point in the original packaging.

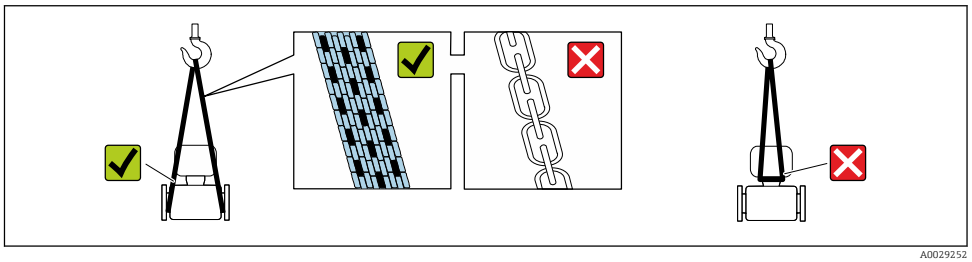

A0029252

Do not remove protective covers or caps installed on process connections. They prevent mechanical damage to the sealing surfaces and contamination in the measuring tube.

5.2.1 Measuring devices without lifting lugs

WARNING

Center of gravity of the measuring device is higher than the suspension points of the webbing slings.

Risk of injury if the measuring device slips.
- Secure the measuring device against slipping or turning.
- Observe the weight specified on the packaging (stick-on label).

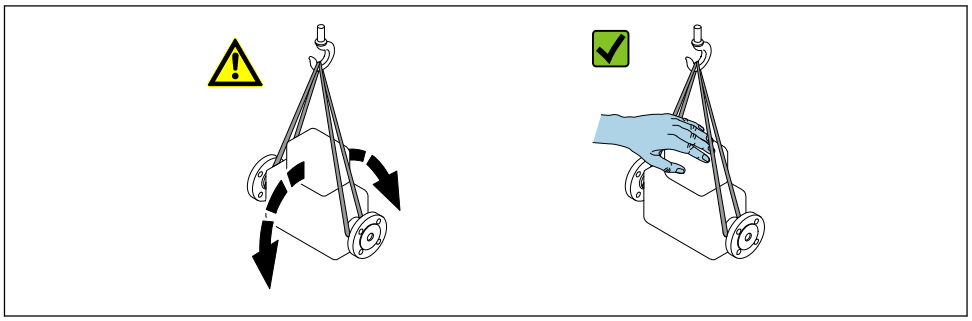

A0029214

5.2.2 Measuring devices with lifting lugs

⚠ CAUTION

Special transportation instructions for devices with lifting lugs

- ▶ Only use the lifting lugs fitted on the device or flanges to transport the device.
- ▶ The device must always be secured at two lifting lugs at least.

5.2.3 Transporting with a fork lift

If transporting in wood crates, the floor structure enables the crates to be lifted lengthwise or at both sides using a forklift.

⚠ CAUTION

Risk of damaging the magnetic coil

- ▶ If transporting by forklift, do not lift the sensor by the metal casing.
- ▶ This would buckle the casing and damage the internal magnetic coils.

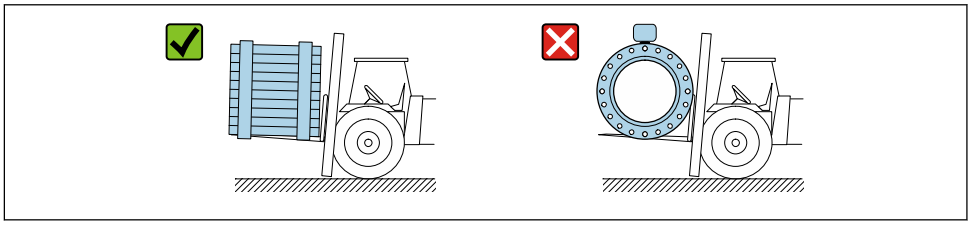

A0029319

5.3 Packaging disposal

All packaging materials are environmentally friendly and 100 % recyclable:

- Outer packaging of device
  Polymer stretch wrap that complies with EU Directive 2002/95/EC (RoHS)
- Packaging
  - Wooden crate treated in accordance with ISPM 15 standard, confirmed by IPPC logo
  - Cardboard box in accordance with European packaging guideline 94/62EC, recyclability confirmed by Resy symbol
- Carrying and securing materials
  - Disposable plastic pallet
  - Plastic straps
  - Plastic adhesive strips
- Filler material
  Paper pads

6 Installation

6.1 Installation conditions

6.1.1 Mounting position

Mounting location

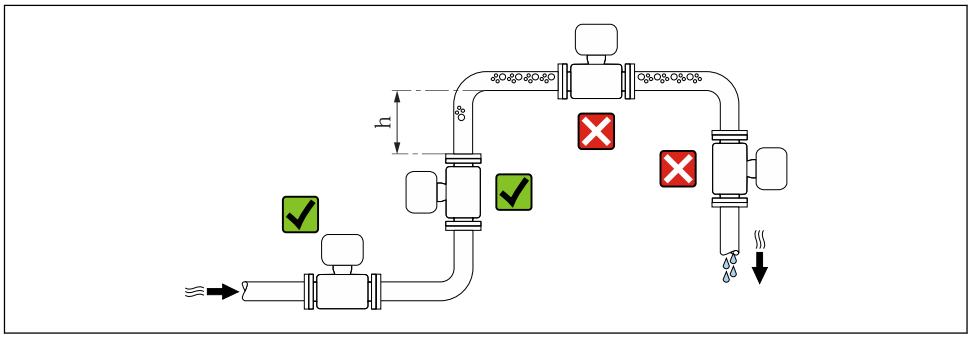

Preferably install the sensor in an ascending pipe, and ensure a sufficient distance to the next pipe elbow: h ≥ 2 × DN.

Installation in down pipes

Install a siphon with a vent valve downstream of the sensor in down pipes whose length h ≥ 5 m (16.4 ft). This precaution is to avoid low pressure and the consequent risk of damage to the measuring tube. This measure also prevents the system losing prime.

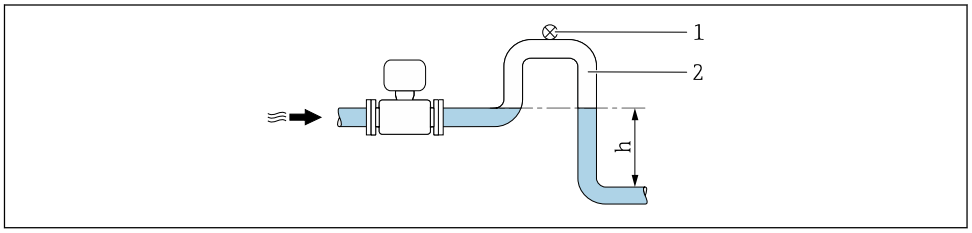

6 *Installation in a down pipe*

1 *Vent valve*
2 *Pipe siphon*
h *Length of down pipe*

Installation in partially filled pipes

A partially filled pipe with a gradient necessitates a drain-type configuration.

No inlet runs necessary with order code for "Design", option C, H, I

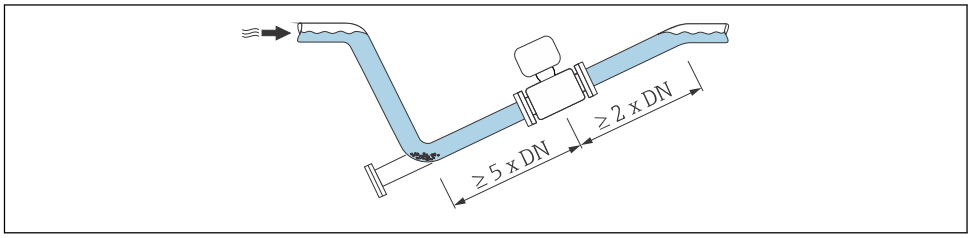

For heavy sensors DN ≥ 350 (14")

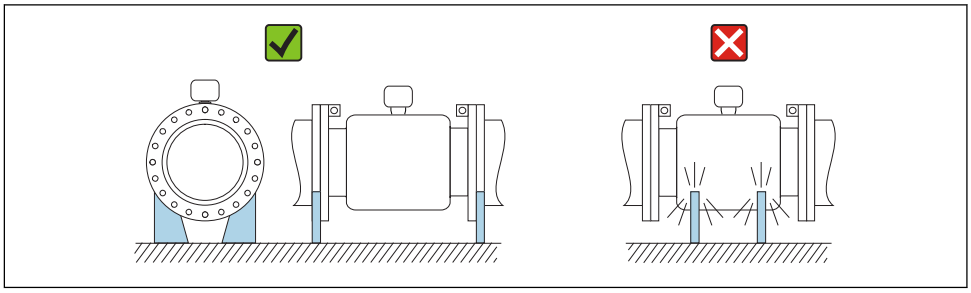

A0016276

Orientation

The direction of the arrow on the sensor nameplate helps you to install the sensor according to the flow direction (direction of medium flow through the piping).

Orientation			Recommendation
A	Vertical orientation	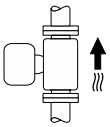 A0015591	✓✓
B	Horizontal orientation, transmitter at top	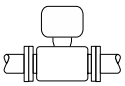 A0015589	✓✓ 1)
C	Horizontal orientation, transmitter at bottom	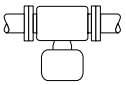 A0015590	✓✓ 2) 3) ✗ 4)
D	Horizontal orientation, transmitter at side	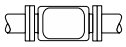 A0015592	✗

1) Applications with low process temperatures may decrease the ambient temperature. To maintain the minimum ambient temperature for the transmitter, this orientation is recommended.
2) Applications with high process temperatures may increase the ambient temperature. To maintain the maximum ambient temperature for the transmitter, this orientation is recommended.
3) To prevent the electronics module from overheating in the case of a sharp rise in temperature (e.g. CIP or SIP processes), install the device with the transmitter component pointing downwards.
4) With the empty pipe detection function switched on: empty pipe detection only works if the transmitter housing is pointing upwards.

Horizontal

- Ideally, the measuring electrode plane should be horizontal. This prevents brief insulation of the measuring electrodes by entrained air bubbles.
- Empty pipe detection only works if the transmitter housing is pointing upwards as otherwise there is no guarantee that the empty pipe detection function will actually respond to a partially filled or empty measuring tube.

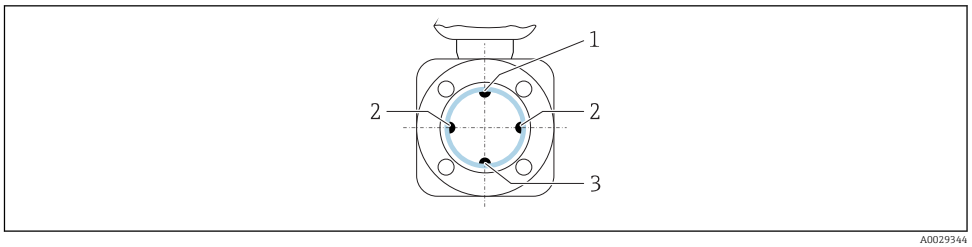

1 *EPD electrode for empty pipe detection*
2 *Measuring electrodes for signal detection*
3 *Reference electrode for potential equalization*

Measuring devices with tantalum or platinum electrodes can be ordered without an EPD electrode. In this case, empty pipe detection is performed via the measuring electrodes.

Inlet and outlet runs

If possible, install the sensor upstream from fittings such as valves, T-pieces or elbows.

Observe the following inlet and outlet runs to comply with accuracy specifications:

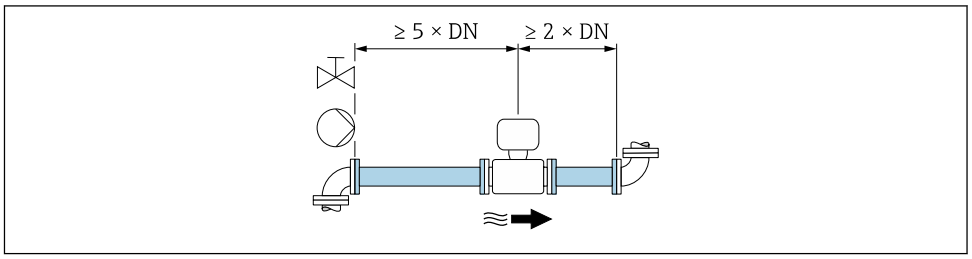

Installation dimensions

For the dimensions and installation lengths of the device, see the "Technical Information" document, "Mechanical construction" section.

6.1.2 Environment and process requirements

Ambient temperature range

Transmitter	▪ Standard: −40 to +60 °C (−40 to +140 °F) ▪ Optional: −50 to +60 °C (−58 to +140 °F) (order code for "Test, certificate", option **JN** "Ambient temperature of transmitter −50 °C (−58 °F)")
Local display	−20 to +60 °C (−4 to +140 °F), the readability of the display may be impaired at temperatures outside the temperature range.
Sensor	▪ Process connection material, carbon steel: −10 to +60 °C (+14 to +140 °F) ▪ Process connection material, stainless steel: −40 to +60 °C (−40 to +140 °F)
Liner	Do not exceed or fall below the permitted temperature range of the liner .

If operating outdoors:
- Install the measuring device in a shady location.
- Avoid direct sunlight, particularly in warm climatic regions.
- Avoid direct exposure to weather conditions.

System pressure

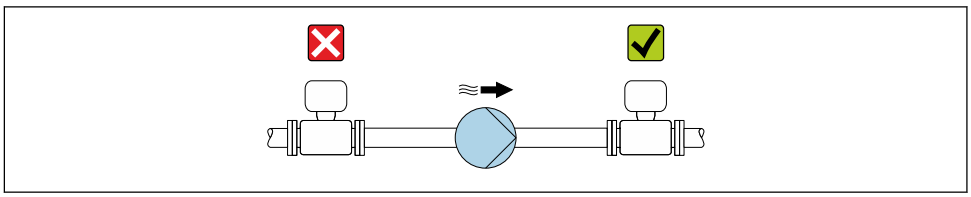

Never install the sensor on the pump suction side in order to avoid the risk of low pressure, and thus damage to the liner.

Furthermore, install pulse dampers if reciprocating, diaphragm or peristaltic pumps are used.

- Information on the liner's resistance to partial vacuum
- Information on the shock resistance of the measuring system
- Information on the vibration resistance of the measuring system

Vibrations

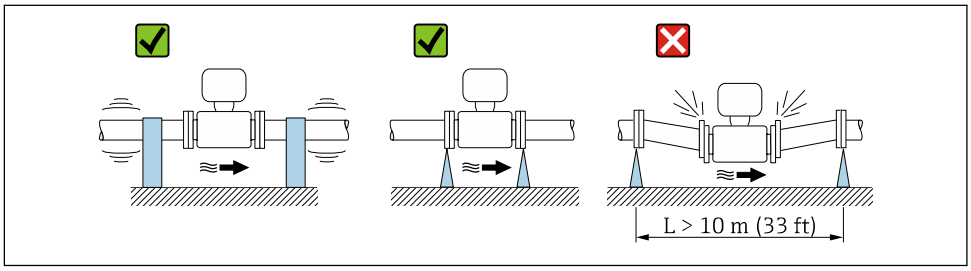

7 *Measures to prevent vibration of the device*

In the event of very strong vibrations, the pipe and sensor must be supported and fixed.

- Information on the shock resistance of the measuring system
- Information on the vibration resistance of the measuring system

Thermal insulation

If process fluids are very hot, it is necessary to insulate pipes in order to reduce energy loss and to prevent individuals from accidentally coming into contact with hot pipes. Please observe the applicable standards and guidelines for insulating pipes.

A housing support/an extended neck is used for heat dissipation:
- Devices with the order code for "Lining", option **B** "PFA high-temperature" always come with a housing support.
- In the case of all other devices, a housing support can be ordered via the order code for "Sensor option", option **CG** "Sensor extended neck".

WARNING

Electronics overheating on account of thermal insulation!

▶ The housing support is used for heat dissipation and must be completely free (i.e. uncovered). At the very maximum, the sensor insulation may extend as far as the upper edge of the two sensor half-shells.

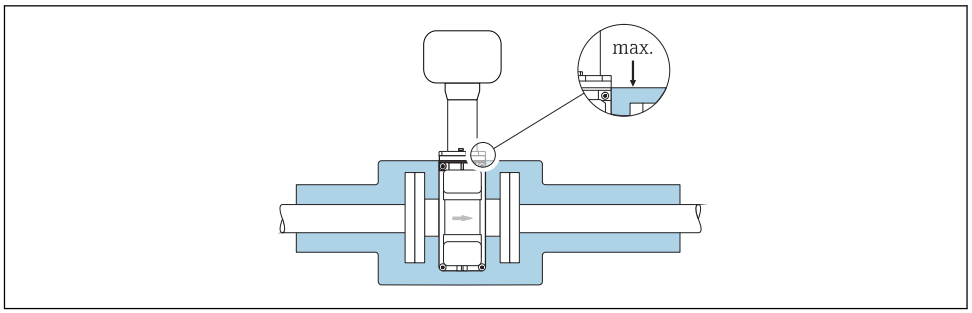

A0031216

Adapters

Suitable adapters to DIN EN 545 (double-flange reducers) can be used to install the sensor in larger-diameter pipes. The resultant increase in the rate of flow improves measuring accuracy with very slow-moving fluids. The nomogram shown here can be used to calculate the pressure loss caused by reducers and expanders.

The nomogram only applies to liquids with a viscosity similar to that of water.

1. Calculate the ratio of the diameters d/D.
2. From the nomogram read off the pressure loss as a function of flow velocity (downstream from the reduction) and the d/D ratio.

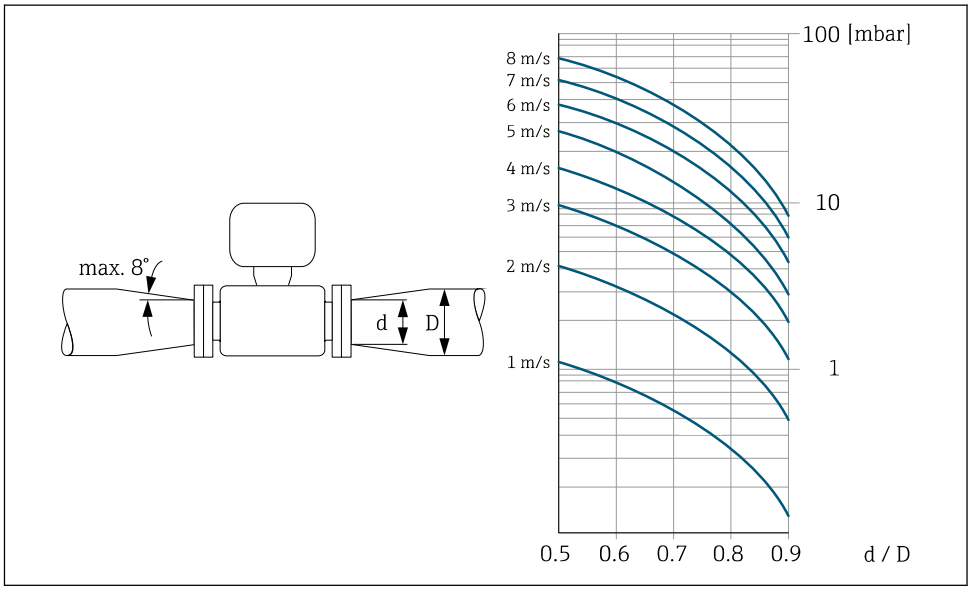

A0029002

6.1.3 Special mounting instructions

Protective cover

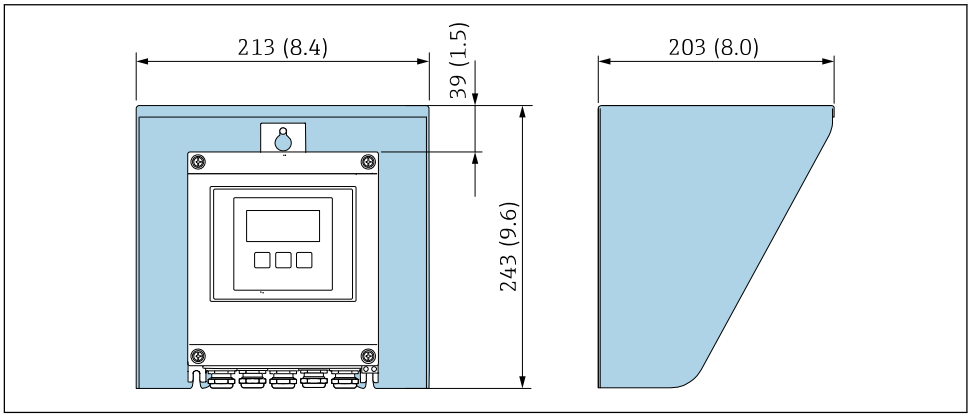

8 *Weather protection cover for Proline 500 – digital*

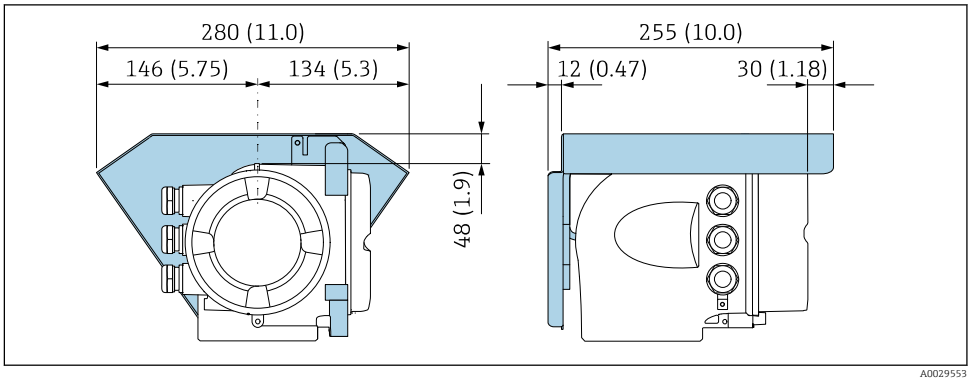

9 *Weather protection cover for Proline 500*

6.2 Mounting the measuring device

6.2.1 Required tools

For transmitter

For mounting on a post:
- Proline 500 – digital transmitter
  - Open-ended wrench AF 10
  - Torx screwdriver TX 25
- Proline 500 transmitter
  Open-ended wrench AF 13

For wall mounting:
Drill with drill bit Ø 6.0 mm

For sensor

For flanges and other process connections: Corresponding mounting tools

6.2.2 Preparing the measuring device

1. Remove all remaining transport packaging.
2. Remove any protective covers or protective caps present from the sensor.
3. Remove stick-on label on the electronics compartment cover.

6.2.3 Mounting the sensor

⚠ WARNING

Danger due to improper process sealing!

- ▶ Ensure that the inside diameters of the gaskets are greater than or equal to that of the process connections and piping.
- ▶ Ensure that the gaskets are clean and undamaged.
- ▶ Install the gaskets correctly.

1. Ensure that the direction of the arrow on the sensor matches the flow direction of the medium.
2. To ensure compliance with device specifications, install the measuring device between the pipe flanges in a way that it is centered in the measurement section.
3. If using ground disks, comply with the Installation Instructions provided.
4. Observe required screw tightening torques → 🖹 30.
5. Install the measuring device or turn the transmitter housing so that the cable entries do not point upwards.

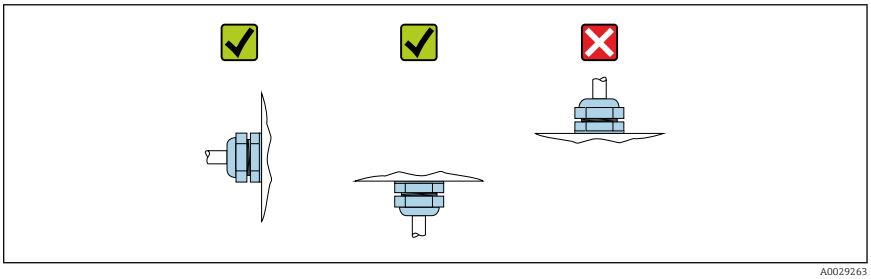

A0029263

Mounting the seals

⚠ CAUTION

An electrically conductive layer could form on the inside of the measuring tube!

Risk of measuring signal short circuit.

- ▶ Do not use electrically conductive sealing compounds such as graphite.

Comply with the following instructions when installing seals:

1. For DIN flanges: only use seals according to DIN EN 1514-1.
2. For "PFA" liner: generally additional seals are **not** required.
3. For "PTFE" liner: generally additional seals are **not** required.

Mounting the ground cable/ground disks

Comply with the information on potential equalization and detailed mounting instructions for the use of ground cables/ground disks .

Screw tightening torques

Please note the following:
- The screw tightening torques listed below apply only to lubricated threads and to pipes not subjected to tensile stress.
- Tighten the screws uniformly and in diagonally opposite sequence.
- Overtightening the screws will deform the sealing faces or damage the seals.

Nominal screw tightening torques → 33

Maximum screw tightening torques

Maximum screw tightening torques for EN 1092-1 (DIN 2501)

Nominal diameter	Pressure rating	Screws	Flange thickness	Max. screw tightening torque [Nm]	
[mm]	[bar]	[mm]	[mm]	PTFE	PFA
15	PN 40	4 × M12	16	11	–
25	PN 40	4 × M12	18	26	20
32	PN 40	4 × M16	18	41	35
40	PN 40	4 × M16	18	52	47
50	PN 40	4 × M16	20	65	59
65 [1)]	PN 16	8 × M16	18	43	40
65	PN 40	8 × M16	22	43	40
80	PN 16	8 × M16	20	53	48
80	PN 40	8 × M16	24	53	48
100	PN 16	8 × M16	20	57	51
100	PN 40	8 × M20	24	78	70
125	PN 16	8 × M16	22	75	67
125	PN 40	8 × M24	26	111	99
150	PN 16	8 × M20	22	99	85
150	PN 40	8 × M24	28	136	120
200	PN 10	8 × M20	24	141	101
200	PN 16	12 × M20	24	94	67
200	PN 25	12 × M24	30	138	105
250	PN 10	12 × M20	26	110	–
250	PN 16	12 × M24	26	131	–
250	PN 25	12 × M27	32	200	–
300	PN 10	12 × M20	26	125	–
300	PN 16	12 × M24	28	179	–
300	PN 25	16 × M27	34	204	–
350	PN 10	16 × M20	26	188	–
350	PN 16	16 × M24	30	254	–
350	PN 25	16 × M30	38	380	–
400	PN 10	16 × M24	26	260	–
400	PN 16	16 × M27	32	330	–
400	PN 25	16 × M33	40	488	–
450	PN 10	20 × M24	28	235	–
450	PN 16	20 × M27	40	300	–

Nominal diameter	Pressure rating	Screws	Flange thickness	Max. screw tightening torque [Nm]	
[mm]	[bar]	[mm]	[mm]	PTFE	PFA
450	PN 25	20 × M33	46	385	–
500	PN 10	20 × M24	28	265	–
500	PN 16	20 × M30	34	448	–
500	PN 25	20 × M33	48	533	–
600	PN 10	20 × M27	28	345	–
600	PN 16	20 × M33	36	658	–
600	PN 25	20 × M36	58	731	–

1) Sizing as per EN 1092-1 (not DIN 2501)

Screw tightening torques for ASME B16.5, Class 150/300

Nominal diameter		Pressure rating	Screws	Max. screw tightening torque [Nm] ([lbf · ft])	
[mm]	[in]	[psi]	[in]	PTFE	PFA
15	½	Class 150	4 × ½	6 (4)	– (–)
15	½	Class 300	4 × ½	6 (4)	– (–)
25	1	Class 150	4 × ½	11 (8)	10 (7)
25	1	Class 300	4 × 5/8	14 (10)	12 (9)
40	1 ½	Class 150	4 × ½	24 (18)	21 (15)
40	1 ½	Class 300	4 × ¾	34 (25)	31 (23)
50	2	Class 150	4 × 5/8	47 (35)	44 (32)
50	2	Class 300	8 × 5/8	23 (17)	22 (16)
80	3	Class 150	4 × 5/8	79 (58)	67 (49)
80	3	Class 300	8 × ¾	47 (35)	42 (31)
100	4	Class 150	8 × 5/8	56 (41)	50 (37)
100	4	Class 300	8 × ¾	67 (49)	59 (44)
150	6	Class 150	8 × ¾	106 (78)	86 (63)
150	6	Class 300	12 × ¾	73 (54)	67 (49)
200	8	Class 150	8 × ¾	143 (105)	109 (80)
250	10	Class 150	12 × 7/8	135 (100)	– (–)
300	12	Class 150	12 × 7/8	178 (131)	– (–)
350	14	Class 150	12 × 1	260 (192)	– (–)
400	16	Class 150	16 × 1	246 (181)	– (–)
450	18	Class 150	16 × 1 1/8	371 (274)	– (–)
500	20	Class 150	20 × 1 1/8	341 (252)	– (–)
600	24	Class 150	20 × 1 ¼	477 (352)	– (–)

Maximum screw tightening torques for JIS B2220

Nominal diameter	Pressure rating	Screws	Max. screw tightening torque [Nm]	
[mm]	[bar]	[mm]	PTFE	PFA
25	10K	4 × M16	32	27
	20K	4 × M16	32	27

Nominal diameter [mm]	Pressure rating [bar]	Screws [mm]	Max. screw tightening torque [Nm]	
			PTFE	PFA
32	10K	4 × M16	38	–
	20K	4 × M16	38	–
40	10K	4 × M16	41	37
	20K	4 × M16	41	37
50	10K	4 × M16	54	46
	20K	8 × M16	27	23
65	10K	4 × M16	74	63
	20K	8 × M16	37	31
80	10K	8 × M16	38	32
	20K	8 × M20	57	46
100	10K	8 × M16	47	38
	20K	8 × M20	75	58
125	10K	8 × M20	80	66
	20K	8 × M22	121	103
150	10K	8 × M20	99	81
	20K	12 × M22	108	72
200	10K	12 × M20	82	54
	20K	12 × M22	121	88
250	10K	12 × M22	133	–
	20K	12 × M24	212	–
300	10K	16 × M22	99	–
	20K	16 × M24	183	–

Screw tightening torques for AS 2129, Table E

Nominal diameter [mm]	Screws [mm]	Max. screw tightening torque [Nm] PTFE
25	4 × M12	21
50	4 × M16	42

Screw tightening torques for AS 4087, PN 16

Nominal diameter [mm]	Screws [mm]	Max. screw tightening torque [Nm] PTFE
50	4 × M16	42

Nominal screw tightening torques

Nominal screw tightening torques for JIS B2220

Nominal diameter [mm]	Pressure rating [bar]	Screws [mm]	Nom. screw tightening torque [Nm]	
			HG	PUR
350	10K	16 × M22	109	109
	20K	16 × M30×3	217	217
400	10K	16 × M24	163	163
	20K	16 × M30×3	258	258
450	10K	16 × M24	155	155
	20K	16 × M30×3	272	272
500	10K	16 × M24	183	183
	20K	16 × M30×3	315	315
600	10K	16 × M30	235	235
	20K	16 × M36×3	381	381

6.2.4 Mounting the transmitter housing: Proline 500 – digital

⚠ CAUTION

Ambient temperature too high!

Danger of electronics overheating and housing deformation.

- ▶ Do not exceed the permitted maximum ambient temperature → 🖹 25.
- ▶ If operating outdoors: Avoid direct sunlight and exposure to weathering, particularly in warm climatic regions.

⚠ CAUTION

Excessive force can damage the housing!

- ▶ Avoid excessive mechanical stress.

The transmitter can be mounted in the following ways:

- Post mounting
- Wall mounting

Post mounting

⚠ WARNING

Excessive tightening torque applied to the fixing screws!

Risk of damaging the plastic transmitter.

- ▶ Tighten the fixing screws as per the tightening torque: 2 Nm (1.5 lbf ft)

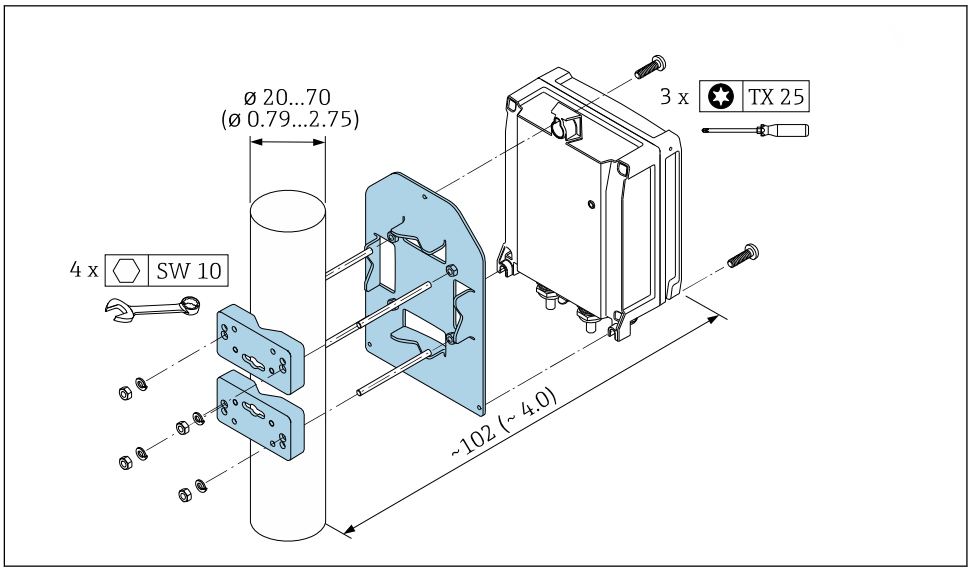

10 *Engineering unit mm (in)*

Wall mounting

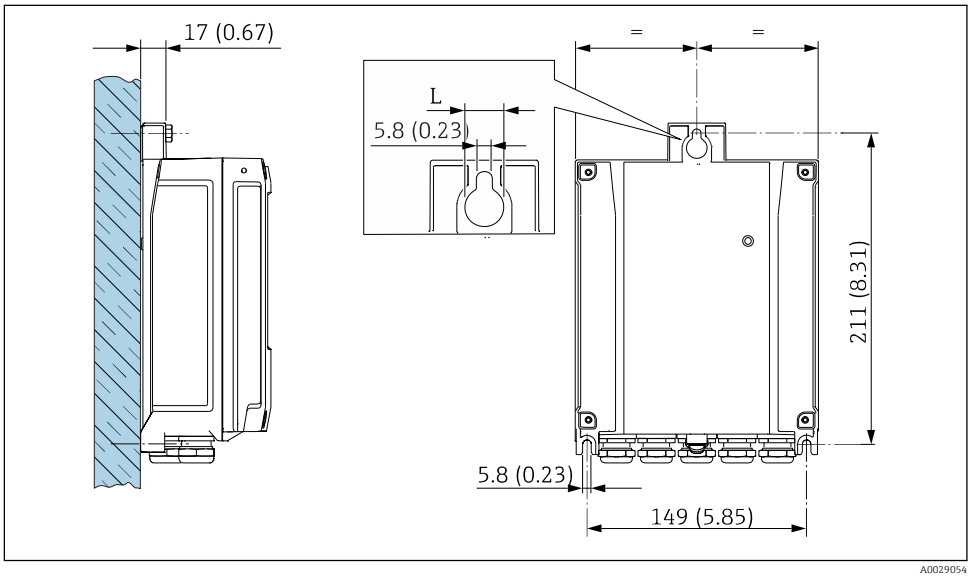

11 *Engineering unit mm (in)*

L Depends on order code for "Transmitter housing"

Order code for "Transmitter housing"
- Option **A**, aluminum coated: L =14 mm (0.55 in)
- Option **D**, polycarbonate: L = 13 mm (0.51 in)

1. Drill the holes.
2. Insert wall plugs into the drilled holes.
3. Screw in the securing screws slightly at first.
4. Fit the transmitter housing over the securing screws and mount in place.
5. Tighten the securing screws.

6.2.5 Mounting the transmitter housing: Proline 500

⚠ CAUTION

Ambient temperature too high!

Danger of electronics overheating and housing deformation.

- ▶ Do not exceed the permitted maximum ambient temperature → 🖹 25.
- ▶ If operating outdoors: Avoid direct sunlight and exposure to weathering, particularly in warm climatic regions.

⚠ CAUTION

Excessive force can damage the housing!

- ▶ Avoid excessive mechanical stress.

The transmitter can be mounted in the following ways:

- Post mounting
- Wall mounting

Wall mounting

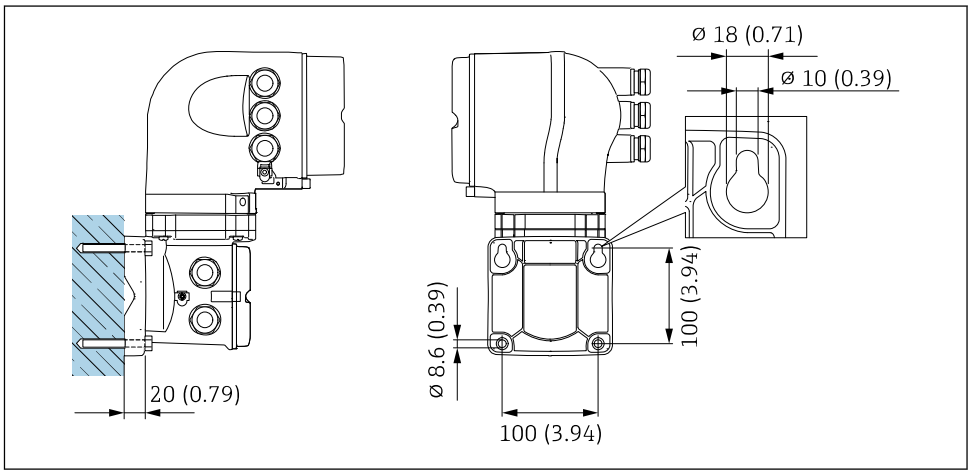

12 *Engineering unit mm (in)*

1. Drill the holes.
2. Insert wall plugs into the drilled holes.
3. Screw in the securing screws slightly at first.
4. Fit the transmitter housing over the securing screws and mount in place.
5. Tighten the securing screws.

Post mounting

⚠ WARNING

Order code for "Transmitter housing", option L "Cast, stainless": cast transmitters are very heavy.

They are unstable if they are not mounted on a secure, fixed post.

► Only mount the transmitter on a secure, fixed post on a stable surface.

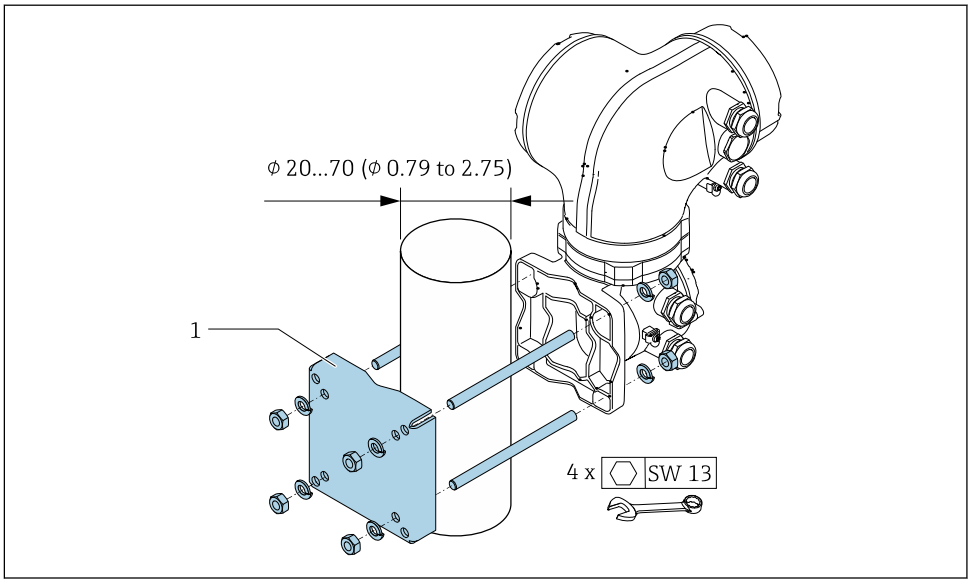

13 *Engineering unit mm (in)*

6.2.6 Turning the transmitter housing: Proline 500

To provide easier access to the connection compartment or display module, the transmitter housing can be turned.

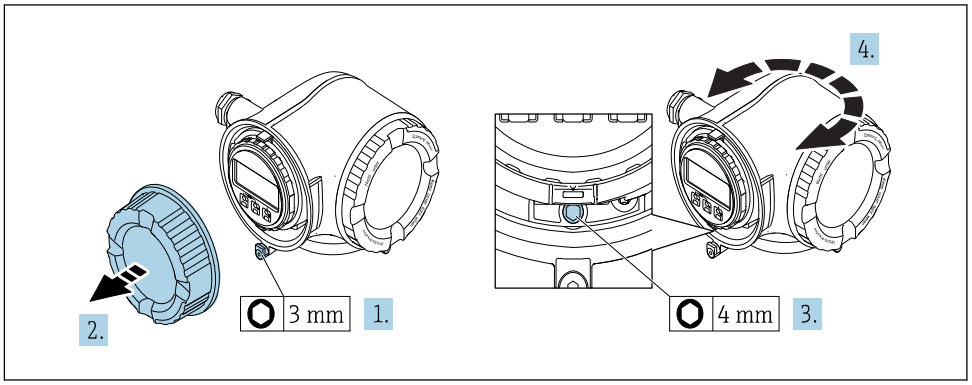

1. Depending on the device version: Loosen the securing clamp of the connection compartment cover.
2. Unscrew the connection compartment cover.
3. Release the fixing screw.
4. Turn the housing to the desired position.
5. Firmly tighten the securing screw.
6. Screw on the connection compartment cover

7. Depending on the device version: Attach the securing clamp of the connection compartment cover.

6.2.7 Turning the display module: Proline 500

The display module can be turned to optimize display readability and operability.

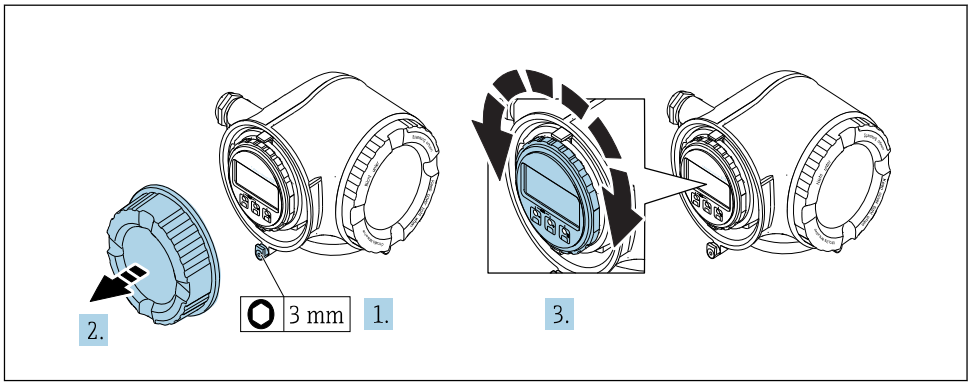

A0030035

1. Depending on the device version: Loosen the securing clamp of the connection compartment cover.
2. Unscrew the connection compartment cover.
3. Turn the display module to the desired position: max. 8 × 45° in each direction.
4. Screw on the connection compartment cover.
5. Depending on the device version: Attach the securing clamp of the connection compartment cover.

6.3 Post-installation check

Is the device undamaged (visual inspection)?	❑
Does the measuring device conform to the measuring point specifications? For example: ▪ Process temperature ▪ Process pressure (refer to the section on "Pressure-temperature ratings" in the "Technical Information" document) ▪ Ambient temperature ▪ Measuring range	❑
Has the correct orientation for the sensor been selected ? ▪ According to sensor type ▪ According to medium temperature ▪ According to medium properties (outgassing, with entrained solids)	❑
Does the arrow on the sensor nameplate match the direction of flow of the fluid through the piping ?	❑
Are the measuring point identification and labeling correct (visual inspection)?	❑
Is the device adequately protected from precipitation and direct sunlight?	❑
Have the fixing screws been tightened with the correct tightening torque?	❑

7 Electrical connection

NOTICE

The measuring device does not have an internal circuit breaker.

- ▶ For this reason, assign the measuring device a switch or power-circuit breaker so that the power supply line can be easily disconnected from the mains.
- ▶ Although the measuring device is equipped with a fuse, additional overcurrent protection (maximum 10 A) should be integrated into the system installation.

7.1 Connection conditions

7.1.1 Required tools

- For cable entries: Use corresponding tools
- For securing clamp: Allen key 3 mm
- Wire stripper
- When using stranded cables: crimper for wire end ferrule
- For removing cables from terminal: Flat blade screwdriver ≤ 3 mm (0.12 in)

7.1.2 Requirements for connecting cable

The connecting cables provided by the customer must fulfill the following requirements.

Electrical safety

In accordance with applicable federal/national regulations.

Protective ground cable

Cable ≥2.08 mm^2 (14 AWG)

The grounding impedance must be less than 1 Ω.

Permitted temperature range

- The installation guidelines that apply in the country of installation must be observed.
- The cables must be suitable for the minimum and maximum temperatures to be expected.

Power supply cable

Standard installation cable is sufficient.

Signal cable

Current output 4 to 20 mA HART

A shielded cable is recommended. Observe grounding concept of the plant.

Current output 0/4 to 20 mA

Standard installation cable is sufficient.

Pulse/frequency/switch output

Standard installation cable is sufficient.

Double pulse output

Standard installation cable is sufficient.

Relay output

Standard installation cable is sufficient.

Current input 0/4 to 20 mA

Standard installation cable is sufficient.

Status input

Standard installation cable is sufficient.

Cable diameter

- Cable glands supplied:
  M20 × 1.5 with cable Ø 6 to 12 mm (0.24 to 0.47 in)
- Spring-loaded terminals: Suitable for strands and strands with ferrules.
  Conductor cross-section 0.2 to 2.5 mm^2 (24 to 12 AWG).

Choice of connecting cable between the transmitter and sensor

Depends on the type of transmitter and the installation zones

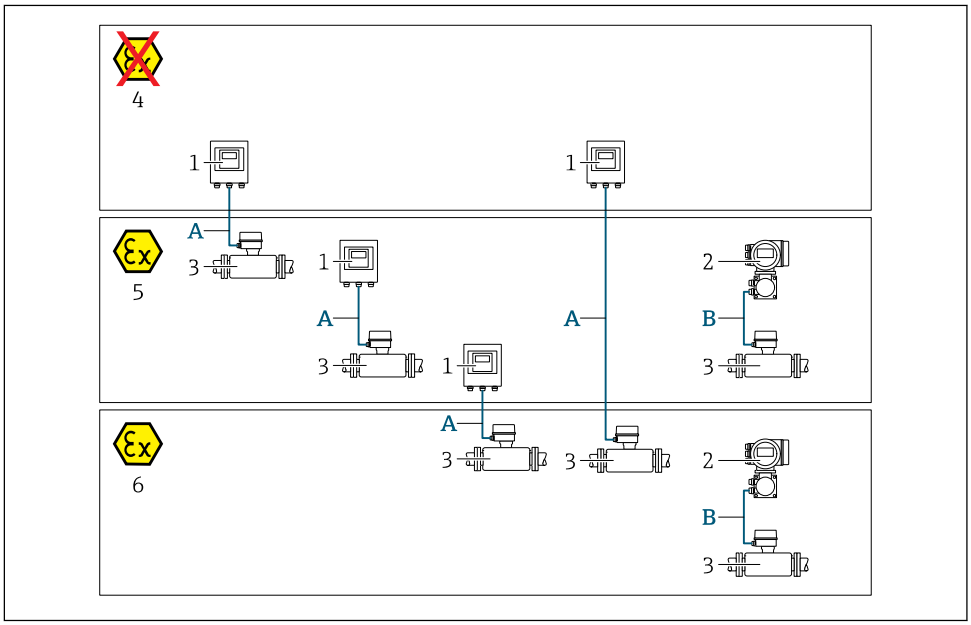

1 *Proline 500 digital transmitter*
2 *Proline 500 transmitter*
3 *Promag sensor*
4 *Non-hazardous area*
5 *Hazardous area: Zone 2; Class I, Division 2*
6 *Hazardous area: Zone 1; Class I, Division 1*
A *Standard cable to 500 digital transmitter → 40*
Transmitter installed in the non-hazardous area or hazardous area: Zone 2; Class I, Division 2 / sensor installed in the hazardous area: Zone 2; Class I, Division 2 or Zone 1; Class I, Division 1
B *Signal cable to 500 transmitter → 41*
Transmitter and sensor installed in the hazardous area: Zone 2; Class I, Division 2 oder Zone 1; Class I, Division 1

A: Connecting cable between sensor and transmitter: Proline 500 – digital

Standard cable

A standard cable with the following specifications can be used as the connecting cable.

Design	4 cores (2 pairs); uninsulated stranded CU wires; pair-stranded with common shield
Shielding	Tin-plated copper-braid, optical cover ≥ 85 %
Cable length	Maximum 300 m (1 000 ft), see the following table.

Cross-section	**Cable lengths for use in**	
	Non-hazardous area, Hazardous area: Zone 2; Class I, Division 2	**Hazardous area: Zone 1; Class I, Division 1**
0.34 mm² (AWG 22)	80 m (270 ft)	50 m (165 ft)
0.50 mm² (AWG 20)	120 m (400 ft)	60 m (200 ft)
0.75 mm² (AWG 18)	180 m (600 ft)	90 m (300 ft)
1.00 mm² (AWG 17)	240 m (800 ft)	120 m (400 ft)

Cross-section	Cable lengths for use in	
	Non-hazardous area, Hazardous area: Zone 2; Class I, Division 2	Hazardous area: Zone 1; Class I, Division 1
1.50 mm² (AWG 15)	300 m (1 000 ft)	180 m (600 ft)
2.50 mm² (AWG 13)	300 m (1 000 ft)	300 m (1 000 ft)

Optionally available connecting cable

Design	2 × 2 × 0.34 mm² (AWG 22) PVC cable [1] with common shield (2 pairs, uninsulated stranded CU wires; pair-stranded)
Flame resistance	According to DIN EN 60332-1-2
Oil-resistance	According to DIN EN 60811-2-1
Shielding	Tin-plated copper-braid, optical cover ≥ 85 %
Operating temperature	When mounted in a fixed position: −50 to +105 °C (−58 to +221 °F); when cable can move freely: −25 to +105 °C (−13 to +221 °F)
Available cable length	Fixed: 20 m (65 ft); variable: up to maximum 50 m (165 ft)

1) UV radiation can impair the cable outer sheath. Protect the cable from direct sunshine where possible.

B: Connecting cable between sensor and transmitter: Proline 500

Signal cable

Design	3 × 0.38 mm² (20 AWG) with common, braided copper shield (Ø ~ 9.5 mm (0.37 in)) and individual shielded cores
Conductor resistance	≤50 Ω/km (0.015 Ω/ft)
Capacitance: core/shield	≤420 pF/m (128 pF/ft)
Cable length (max.)	Depends on the medium conductivity, max. 200 m (656 ft)
Cable lengths (available for order)	5 m (15 ft), 10 m (32 ft), 20 m (65 ft) or variable length up to max. 200 m (656 ft)
Operating temperature	−20 to +80 °C (−68 to +176 °F)

Coil current cable

Design	3 × 0.75 mm² (18 AWG) with common, braided copper shield (Ø ~ 9 mm (0.35 in)) and individual shielded cores
Conductor resistance	≤37 Ω/km (0.011 Ω/ft)
Capacitance: core/core, shield grounded	≤120 pF/m (37 pF/ft)
Cable length (max.)	Depends on the medium conductivity, max. 200 m (656 ft)
Cable lengths (available for order)	5 m (15 ft), 10 m (32 ft), 20 m (65 ft) or variable length up to max. 200 m (656 ft)
Operating temperature	−20 to +80 °C (−68 to +176 °F)
Test voltage for cable insulation	≤ AC 1433 V rms 50/60 Hz or ≥ DC 2026 V

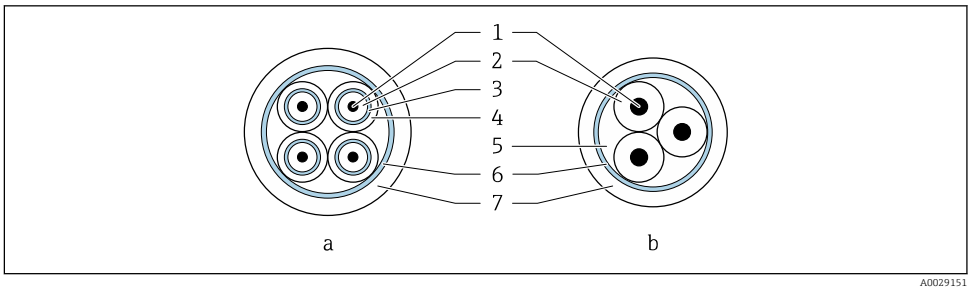

14 Cable cross-section

a Electrode cable
b Coil current cable
1 Core
2 Core insulation
3 Core shield
4 Core jacket
5 Core reinforcement
6 Cable shield
7 Outer jacket

Reinforced connecting cables

Reinforced connecting cables with an additional, reinforcing metal braid should be used for:
- When laying the cable directly in the ground
- Where there is a risk of damage from rodents

Operation in zones of severe electrical interference

The measuring system meets the general safety requirements → 206 and EMC specifications → 193.

Grounding is by means of the ground terminal provided for the purpose inside the connection housing. The stripped and twisted lengths of cable shield to the ground terminal must be as short as possible.

7.1.3 Terminal assignment

Transmitter: supply voltage, input/outputs

The terminal assignment of the inputs and outputs depends on the individual order version of the device. The device-specific terminal assignment is documented on an adhesive label in the terminal cover.

Supply voltage		Input/output 1		Input/output 2		Input/output 3		Input/output 4	
1 (+)	2 (–)	26 (+)	27 (–)	24 (+)	25 (–)	22 (+)	23 (–)	20 (+)	21 (–)
		Device-specific terminal assignment: adhesive label in terminal cover.							

Transmitter and sensor connection housing: connecting cable

The sensor and transmitter, which are mounted in separate locations, are interconnected by a connecting cable. The cable is connected via the sensor connection housing and the transmitter housing.

Terminal assignment and connection of the connecting cable:
- Proline 500 – digital→ 46
- Proline 500 → 51

7.1.4 Preparing the measuring device

Carry out the steps in the following order:

1. Mount the sensor and transmitter.
2. Connection housing, sensor: Connect connecting cable.
3. Transmitter: Connect connecting cable.
4. Transmitter: Connect signal cable and cable for supply voltage.

NOTICE

Insufficient sealing of the housing!

Operational reliability of the measuring device could be compromised.

▶ Use suitable cable glands corresponding to the degree of protection.

1. Remove dummy plug if present.
2. If the measuring device is supplied without cable glands:
   Provide suitable cable gland for corresponding connecting cable.
3. If the measuring device is supplied with cable glands:
   Observe requirements for connecting cables → 38.

7.1.5 Preparing the connecting cable: Proline 500 – digital

When terminating the connecting cable, pay attention to the following points:

- For cables with fine-wire cores (stranded cables):
  Fit the cores with ferrules.

Transmitter	Sensor
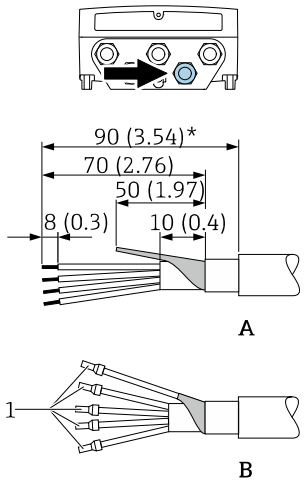	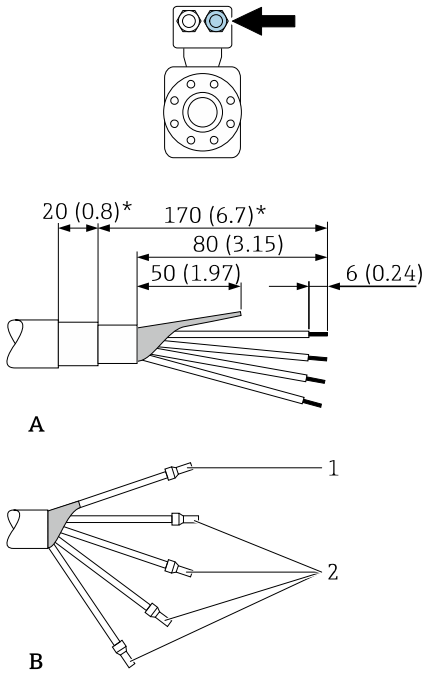

Engineering unit mm (in)
A = Terminate the cable
B = Fit ferrules on cables with fine-wire cores (stranded cables)
1 = Red ferrules, Φ 1.0 mm (0.04 in)
2 = White ferrules, Φ 0.5 mm (0.02 in)
* = Stripping only for reinforced cables

7.1.6 Preparing the connecting cable: Proline 500

When terminating the connecting cable, pay attention to the following points:

1. In the case of the electrode cable:
   Make sure that the ferrules do not touch the core shields on the sensor side.
   Minimum distance = 1 mm (exception: green “GND” cable)
2. In the case of the coil current cable:
   Insulate one core of the three-core cable at the level of the core reinforcement. You only require two cores for the connection.
3. For cables with fine-wire cores (stranded cables):
   Fit the cores with ferrules.

Transmitter

Electrode cable

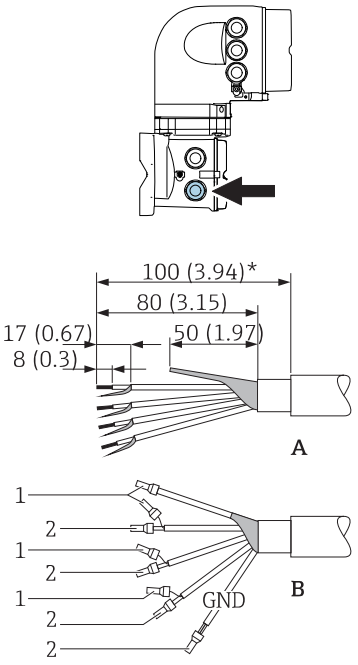

Coil current cable

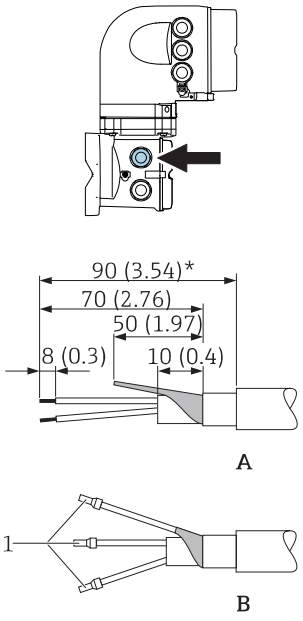

Sensor

Electrode cable

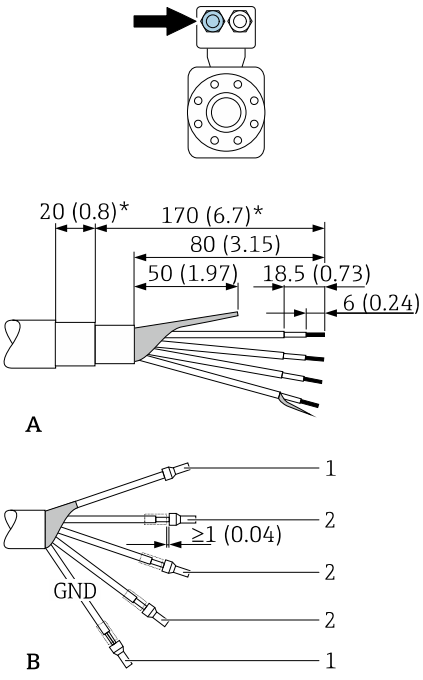

Coil current cable

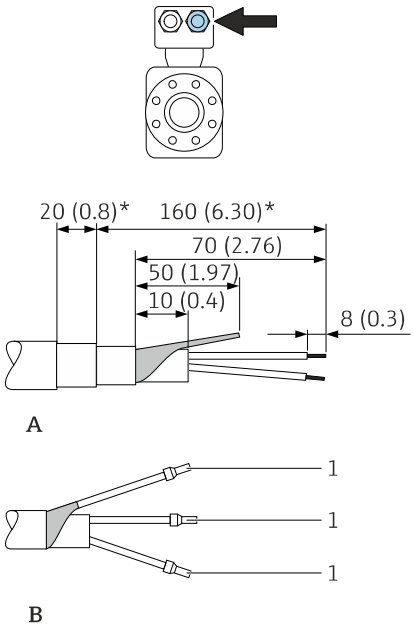

Engineering unit mm (in)
A = Terminate the cable
B = Fit ferrules on cables with fine-wire cores (stranded cables)
1 = Red ferrules, ϕ 1.0 mm (0.04 in)
2 = White ferrules, ϕ 0.5 mm (0.02 in)
* = Stripping only for reinforced cables

7.2 Connecting the measuring device: Proline 500 - digital

NOTICE

Limitation of electrical safety due to incorrect connection!

- ▶ Have electrical connection work carried out by appropriately trained specialists only.
- ▶ Observe applicable federal/national installation codes and regulations.
- ▶ Comply with local workplace safety regulations.
- ▶ Always connect the protective ground cable ⏚ before connecting additional cables.
- ▶ For use in potentially explosive atmospheres, observe the information in the device-specific Ex documentation.

7.2.1 Connecting the connecting cable

⚠ WARNING

Risk of damaging the electronic components!

- ▶ Connect the sensor and transmitter to the same potential equalization.
- ▶ Only connect the sensor to a transmitter with the same serial number.
- ▶ Ground the connection housing of the sensor via the external screw terminal.

Connecting cable terminal assignment

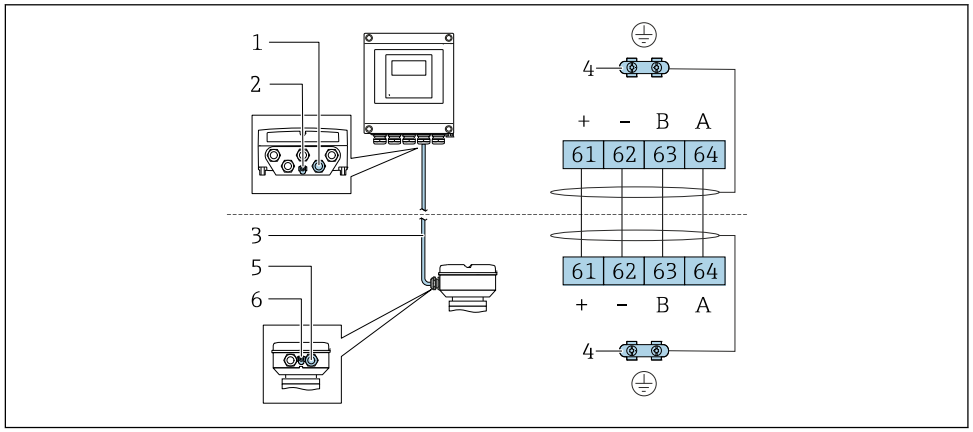

1 Cable entry for cable on transmitter housing
2 Protective earth (PE)
3 Connecting cable ISEM communication
4 Grounding via ground connection; on device plug versions grounding is through the plug itself
5 Cable entry for cable or connection of device plug on sensor connection housing
6 Protective earth (PE)

Connecting the connecting cable to the sensor connection housing

Connection via terminals with order code for "Sensor connection housing":
- Option **A** "Aluminum, coated"→ 🖹 47
- Option **L** "Cast, stainless"→ 🖹 47

Connecting the connecting cable to the transmitter

The cable is connected to the transmitter via terminals → 🖹 48.

Connecting the sensor connection housing via terminals

For the device version with the order code for "Sensor connection housing":
- Option **A** "Aluminum coated"
- Option **L** "Cast, stainless"

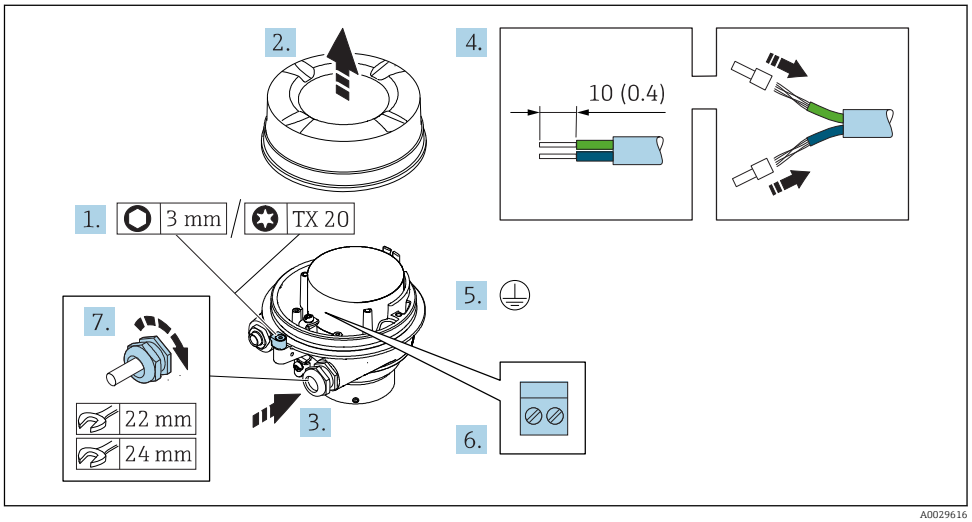

A0029616

1. Loosen the securing clamp of the housing cover.
2. Unscrew the housing cover.
3. Push the cable through the cable entry . To ensure tight sealing, do not remove the sealing ring from the cable entry.
4. Strip the cable and cable ends. In the case of stranded cables, fit ferrules.
5. Connect the protective ground.
6. Connect the cable in accordance with the connecting cable terminal assignment.
7. Firmly tighten the cable glands.
   ↳ This concludes the process for connecting the connecting cable.

⚠ WARNING

Housing degree of protection voided due to insufficient sealing of the housing.

▶ Screw in the thread on the cover without using any lubricant. The thread on the cover is coated with a dry lubricant.

8. Screw on the housing cover.
9. Tighten the securing clamp of the housing cover.

Connecting the connecting cable to the transmitter

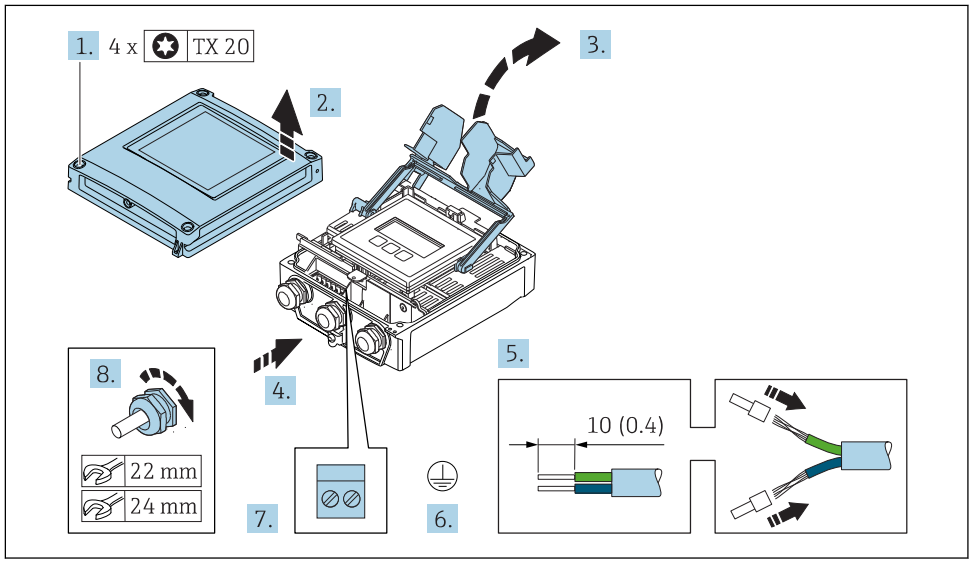

1. Loosen the 4 fixing screws on the housing cover.
2. Open the housing cover.
3. Fold open the terminal cover.
4. Push the cable through the cable entry . To ensure tight sealing, do not remove the sealing ring from the cable entry.
5. Strip the cable and cable ends. In the case of stranded cables, fit ferrules.
6. Connect the protective ground.
7. Connect the cable in accordance with the connecting cable terminal assignment → 46.
8. Firmly tighten the cable glands.
   ↳ This concludes the process for connecting the connecting cable.
9. Close the housing cover.
10. Tighten the securing screw of the housing cover.
11. After connecting the connecting cable:
    Connect the signal cable and the supply voltage cable → 49.

7.2.2 Connecting the signal cable and the supply voltage cable

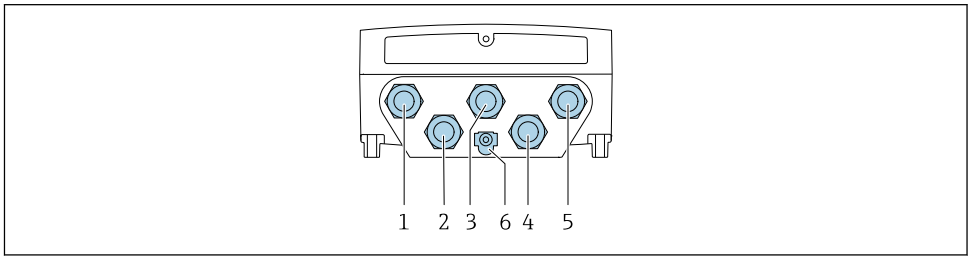

1 *Terminal connection for supply voltage*
2 *Terminal connection for signal transmission, input/output*
3 *Terminal connection for signal transmission, input/output*
4 *Terminal connection for connecting cable between sensor and transmitter*
5 *Terminal connection for signal transmission, input/output; optional: connection for external WLAN antenna*
6 *Protective earth (PE)*

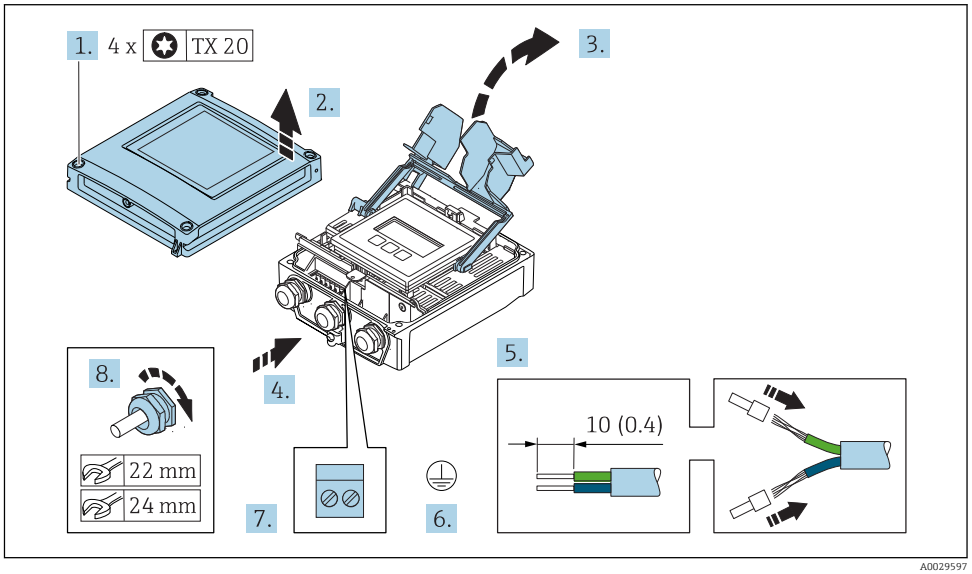

1. Loosen the 4 fixing screws on the housing cover.
2. Open the housing cover.
3. Fold open the terminal cover.
4. Push the cable through the cable entry . To ensure tight sealing, do not remove the sealing ring from the cable entry.
5. Strip the cable and cable ends. In the case of stranded cables, fit ferrules.
6. Connect the protective ground.
7. Connect the cable in accordance with the terminal assignment .
   ↳ **Signal cable terminal assignment:** The device-specific terminal assignment is documented on an adhesive label in the terminal cover.
   Supply voltage terminal assignment: Adhesive label in the terminal cover or → 📄 42.
8. Firmly tighten the cable glands.
   ↳ This concludes the cable connection process.
9. Close the terminal cover.
10. Close the housing cover.

⚠ WARNING

Housing degree of protection may be voided due to insufficient sealing of the housing.

▶ Screw in the screw without using any lubricant.

⚠ WARNING

Excessive tightening torque applied to the fixing screws!

Risk of damaging the plastic transmitter.

▶ Tighten the fixing screws as per the tightening torque: 2 Nm (1.5 lbf ft)

11. Tighten the 4 fixing screws on the housing cover.

Removing a cable

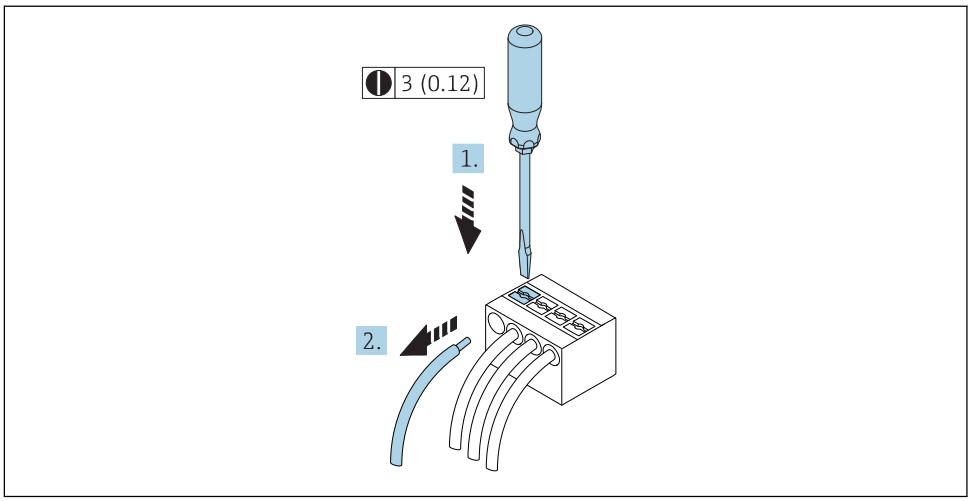

15 *Engineering unit mm (in)*

1. To remove a cable from the terminal, use a flat-blade screwdriver to push the slot between the two terminal holes
2. while simultaneously pulling the cable end out of the terminal.

7.3 Connecting the measuring device: Proline 500

NOTICE

Limitation of electrical safety due to incorrect connection!

- Have electrical connection work carried out by appropriately trained specialists only.
- Observe applicable federal/national installation codes and regulations.
- Comply with local workplace safety regulations.
- Always connect the protective ground cable ⏚ before connecting additional cables.
- For use in potentially explosive atmospheres, observe the information in the device-specific Ex documentation.

7.3.1 Connecting the connecting cable

⚠ WARNING

Risk of damaging the electronic components!

- Connect the sensor and transmitter to the same potential equalization.
- Only connect the sensor to a transmitter with the same serial number.
- Ground the connection housing of the sensor via the external screw terminal.

Connecting cable terminal assignment

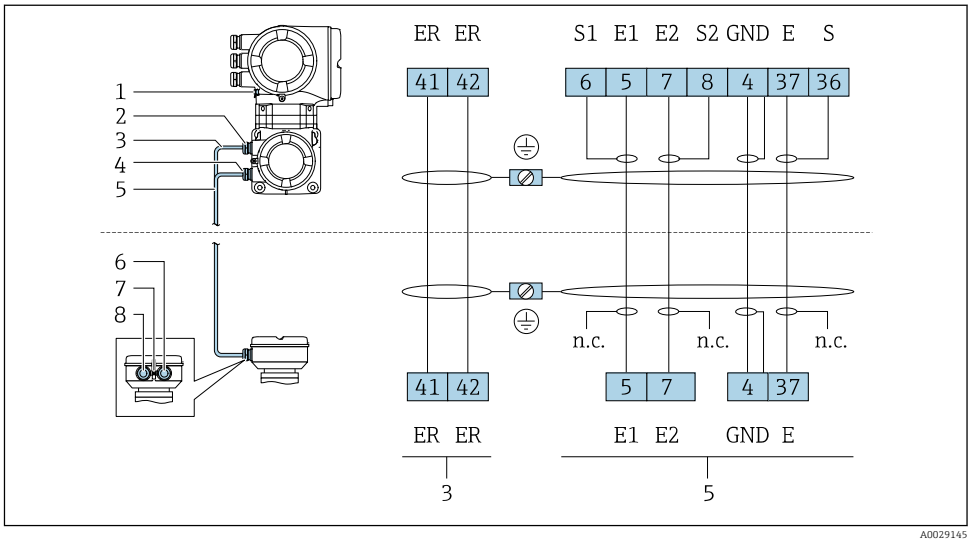

1 Protective earth (PE)
2 Cable entry for coil current cable on transmitter connection housing
3 Coil current cable
4 Cable entry for signal cable on transmitter connection housing
5 Signal cable
6 Cable entry for signal cable on sensor connection housing
7 Protective earth (PE)
8 Cable entry for coil current cable on sensor connection housing

Connecting the connecting cable to the sensor connection housing

Connection via terminals with order code for "Housing":
Option **A** "Aluminum coated"→ 🖹 52

Connecting the connecting cable to the transmitter

The cable is connected to the transmitter via terminals → 🖹 53.

Connecting the sensor connection housing via terminals

For the device version with the order code for "Housing":
- Option **A** "Aluminum coated"
- Option **L** "Cast, stainless"

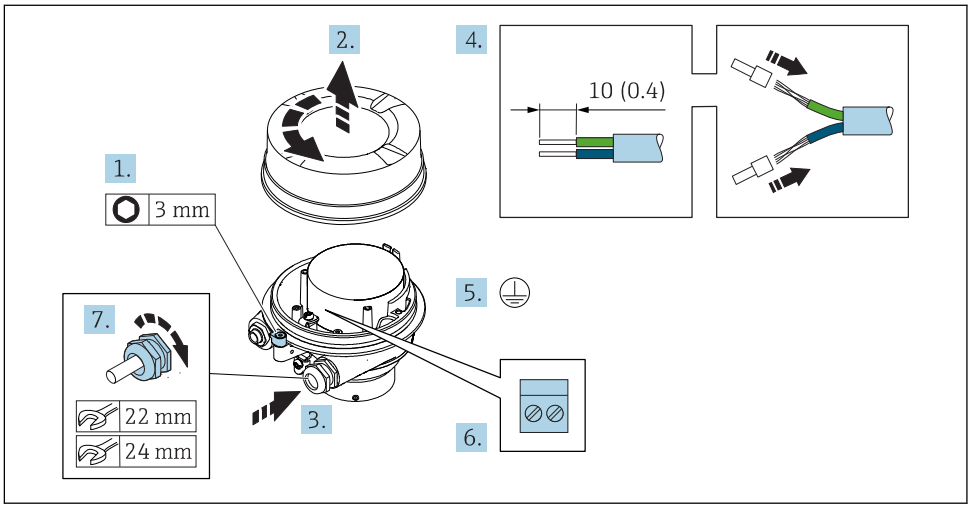

1. Loosen the securing clamp of the housing cover.
2. Unscrew the housing cover.
3. Push the cable through the cable entry . To ensure tight sealing, do not remove the sealing ring from the cable entry.
4. Strip the cable and cable ends. In the case of stranded cables, fit ferrules.
5. Connect the protective ground.
6. Connect the cable in accordance with the connecting cable terminal assignment.
7. Firmly tighten the cable glands.
   ↳ This concludes the process for connecting the connecting cables.

⚠ WARNING

Housing degree of protection voided due to insufficient sealing of the housing.

▶ Screw in the thread on the cover without using any lubricant. The thread on the cover is coated with a dry lubricant.

8. Screw on the housing cover.
9. Tighten the securing clamp of the housing cover.

Connecting the connecting cable to the transmitter

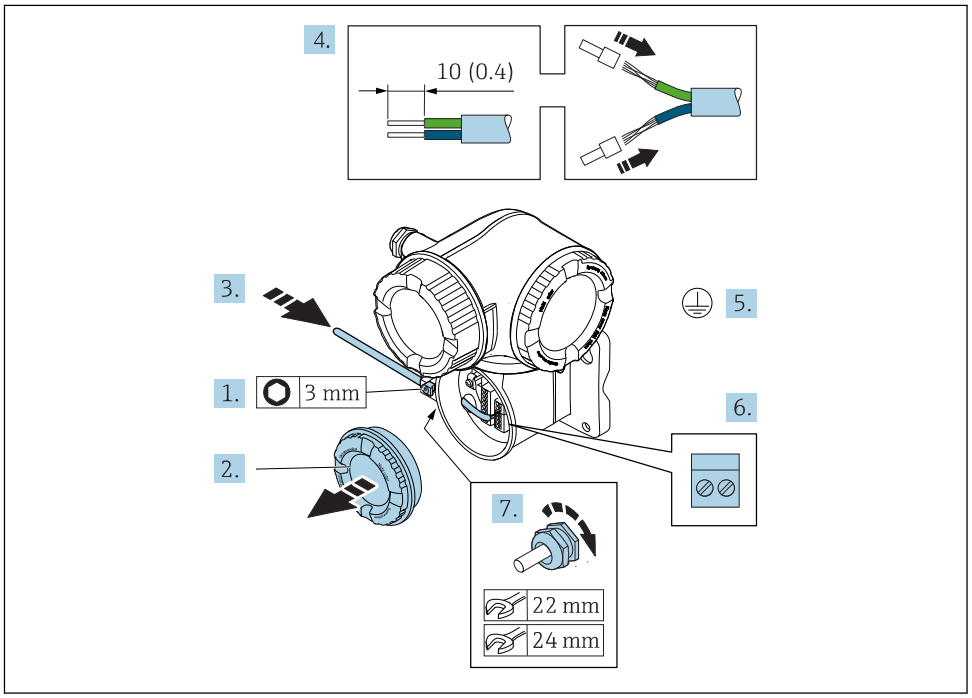

1. Loosen the securing clamp of the connection compartment cover.
2. Unscrew the connection compartment cover.
3. Push the cable through the cable entry . To ensure tight sealing, do not remove the sealing ring from the cable entry.
4. Strip the cable and cable ends. In the case of stranded cables, also fit ferrules.
5. Connect the protective ground.
6. Connect the cable in accordance with the connecting cable terminal assignment → 51.
7. Firmly tighten the cable glands.
   ↳ This concludes the process for connecting the connecting cables.
8. Screw on the connection compartment cover.
9. Tighten the securing clamp of the connection compartment cover.
10. After connecting the connecting cables:
    Connect the signal cable and the supply voltage cable → 54.

7.3.2 Connecting the signal cable and the supply voltage cable

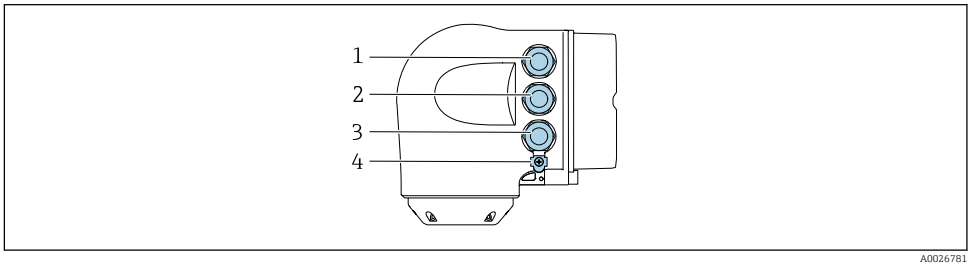

A0026781

1 Terminal connection for supply voltage
2 Terminal connection for signal transmission, input/output
3 Terminal connection for signal transmission, input/output or terminal connection for network connection via service interface (CDI-RJ45)
4 Protective earth (PE)

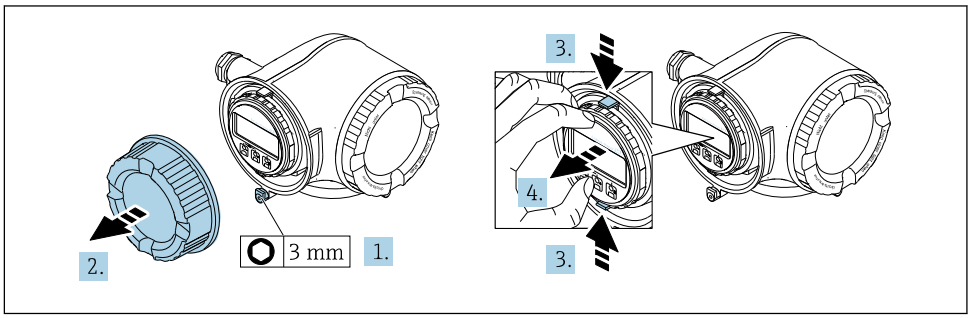

A0029813

1. Loosen the securing clamp of the connection compartment cover.
2. Unscrew the connection compartment cover.
3. Squeeze the tabs of the display module holder together.
4. Remove the display module holder.

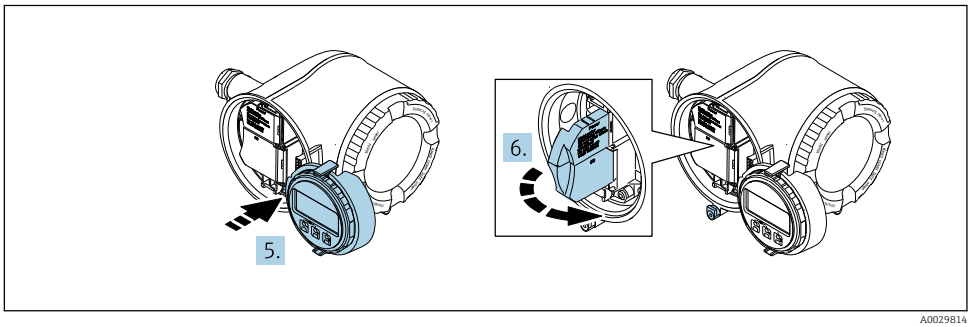

A0029814

5. Attach the holder to the edge of the electronics compartment.
6. Open the terminal cover.

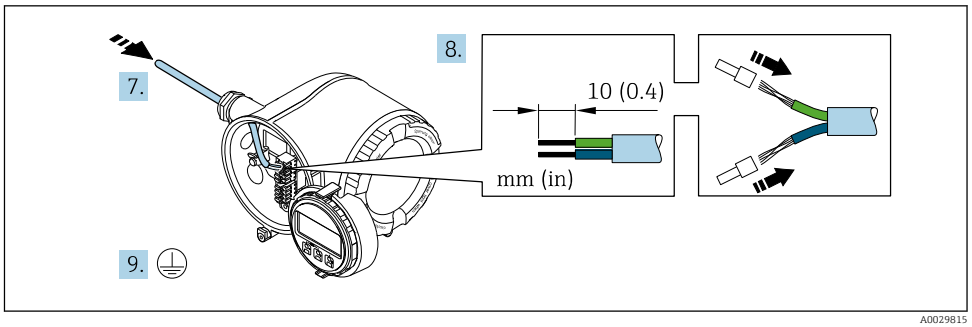

A0029815

7. Push the cable through the cable entry . To ensure tight sealing, do not remove the sealing ring from the cable entry.
8. Strip the cable and cable ends. In the case of stranded cables, also fit ferrules.
9. Connect the protective ground.

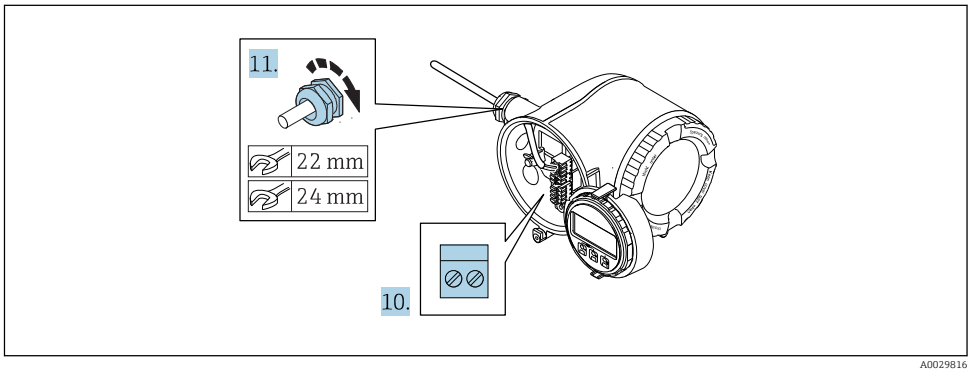

A0029816

10. Connect the cable in accordance with the terminal assignment .
    ↳ **Signal cable terminal assignment:** The device-specific terminal assignment is documented on an adhesive label in the terminal cover.
    Supply voltage terminal assignment: Adhesive label in the terminal cover or → 42.
11. Firmly tighten the cable glands.
    ↳ This concludes the cable connection process.
12. Close the terminal cover.
13. Fit the display module holder in the electronics compartment.
14. Screw on the connection compartment cover.
15. Secure the securing clamp of the connection compartment cover.

Removing a cable

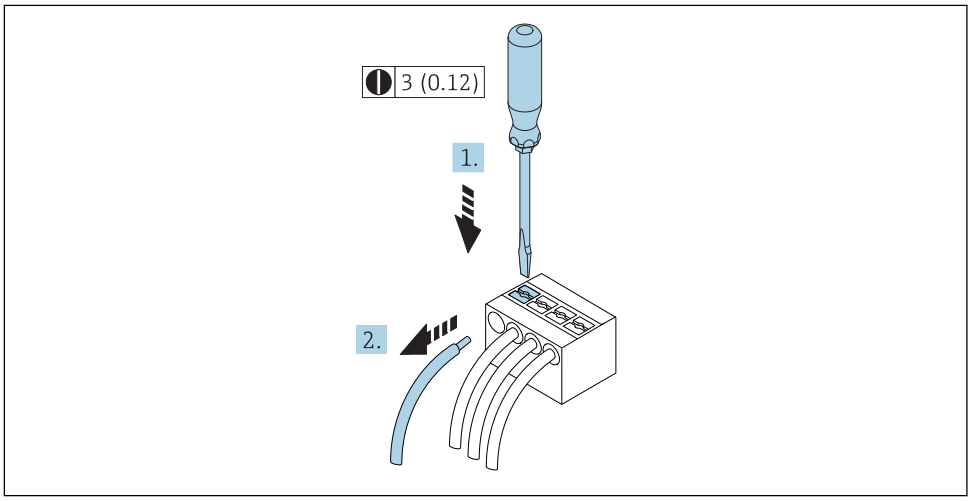

16 *Engineering unit mm (in)*

1. To remove a cable from the terminal, use a flat-blade screwdriver to push the slot between the two terminal holes
2. while simultaneously pulling the cable end out of the terminal.

7.4 Ensuring potential equalization

7.4.1 Requirements

CAUTION

Electrode damage can result in the complete failure of the device!

- Same electrical potential for the fluid and sensor
- Company-internal grounding concepts
- Pipe material and grounding

7.4.2 Connection example, standard scenario

Metal, grounded pipe

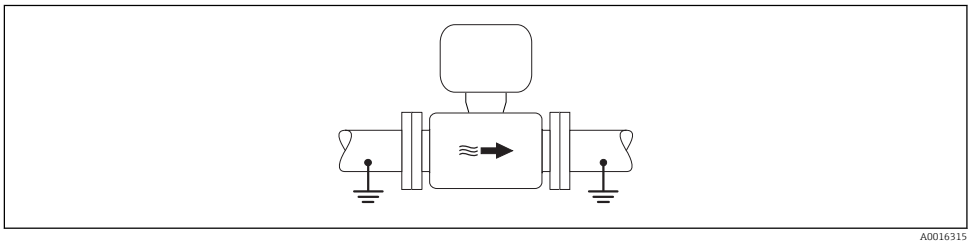

17 *Potential equalization via measuring tube*

7.4.3 Connection example in special situations

Unlined and ungrounded metal pipe

This connection method also applies in situations where:
- The customary potential equalization is not used
- Equalizing currents are present

Ground cable	Copper wire, at least 6 mm² (0.0093 in²)

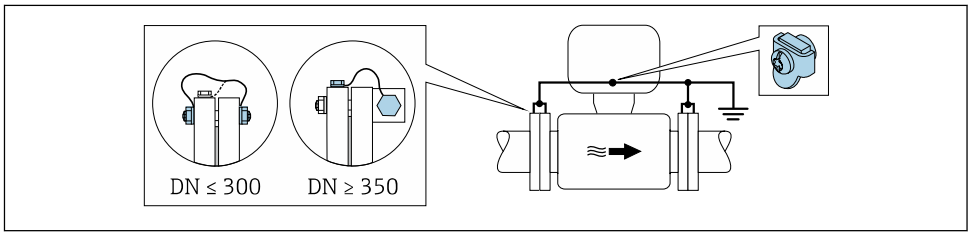

18 *Potential equalization via ground terminal and pipe flanges*

1. Connect both sensor flanges to the pipe flange via a ground cable and ground them.
2. If DN ≤ 300 (12"): Mount the ground cable directly on the conductive flange coating of the sensor with the flange screws.
3. If DN ≥ 350 (14"): Mount the ground cable directly on the metal transport bracket. Observe screw tightening torques: see the Sensor Brief Operating Instructions.
4. Connect the connection housing of the transmitter or sensor to ground potential by means of the ground terminal provided for the purpose.

Plastic pipe or pipe with insulating liner

This connection method also applies in situations where:
- The customary potential equalization is not used
- Equalizing currents are present

Ground cable	Copper wire, at least 6 mm² (0.0093 in²)

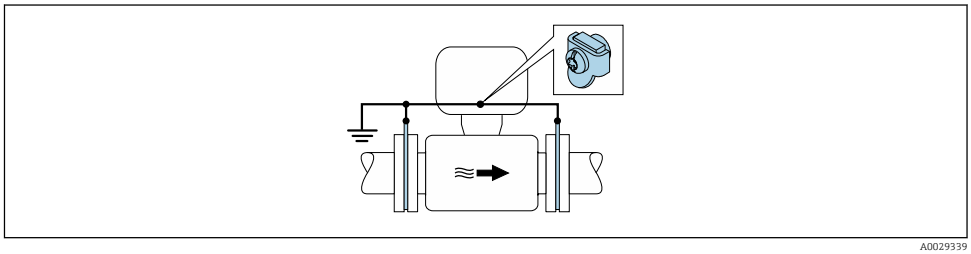

19 *Potential equalization via ground terminal and ground disks*

1. Connect the ground disks to the ground terminal via the ground cable.
2. Connect the ground disks to ground potential.

Pipe with a cathodic protection unit

This connection method is only used if the following two conditions are met:
- Metal pipe without liner or pipe with electrically conductive liner
- Cathodic protection is integrated in the personal protection equipment

Ground cable	Copper wire, at least 6 mm² (0.0093 in²)

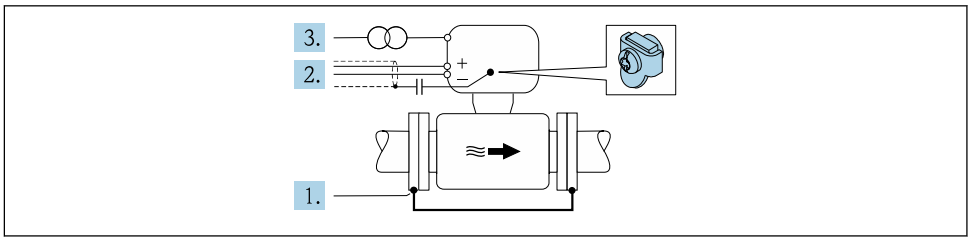

Prerequisite: The sensor is installed in the pipe in a way that provides electrical insulation.

1. Connect the two flanges of the pipe to one another via a ground cable.
2. Guide the shield of the signal lines through a capacitor.
3. Connect the measuring device to the power supply such that it is floating in relation to the protective ground (isolation transformer).

7.5 Special connection instructions

7.5.1 Connection examples

Current output 4 to 20 mA HART

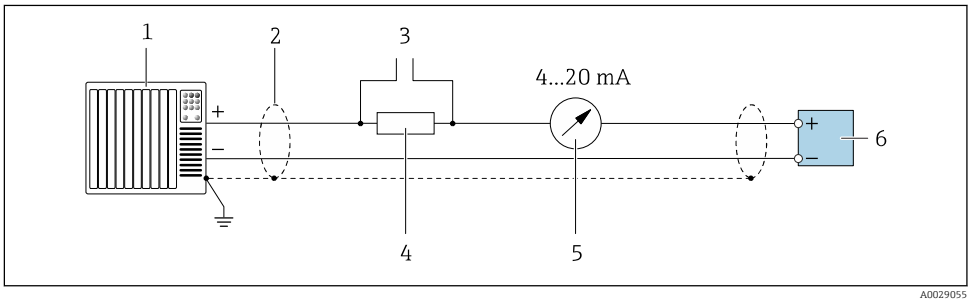

20 Connection example for 4 to 20 mA HART current output (active)

1 *Automation system with current input (e.g. PLC)*
2 *Cable shield provided at one end. The cable shield must be grounded at both ends to comply with EMC requirements; observe cable specifications*
3 *Connection for HART operating devices → 84*
4 *Resistor for HART communication (≥ 250 Ω): observe maximum load → 184*
5 *Analog display unit: observe maximum load → 184*
6 *Transmitter*

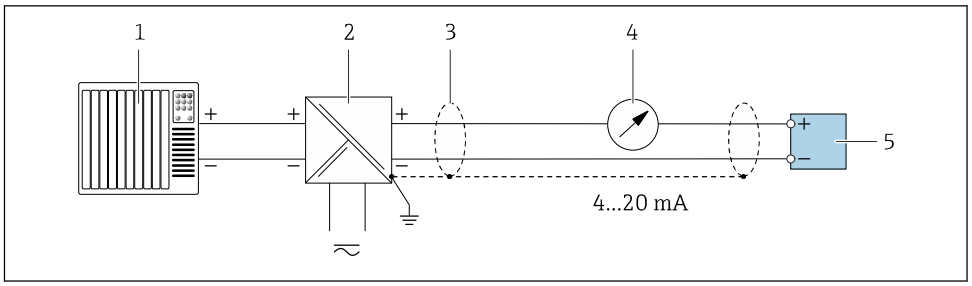

21 *Connection example for 4 to 20 mA HART current output (passive)*

1 *Automation system with current input (e.g. PLC)*
2 *Power supply*
3 *Cable shield provided at one end. The cable shield must be grounded at both ends to comply with EMC requirements; observe cable specifications*
4 *Analog display unit: observe maximum load → 184*
5 *Transmitter*

HART input

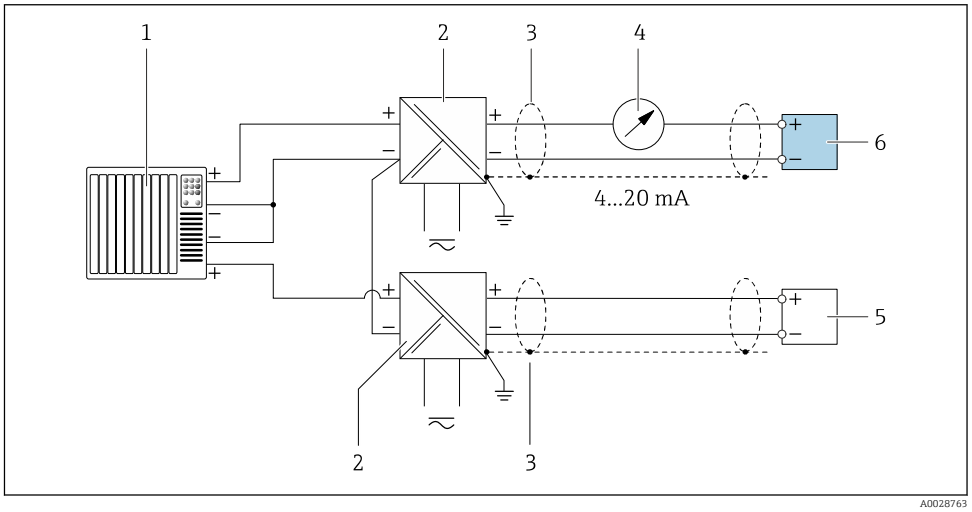

22 *Connection example for HART input with a common negative (passive)*

1 *Automation system with HART output (e.g. PLC)*
2 *Active barrier for power supply (e.g. RN221N)*
3 *Cable shield provided at one end. The cable shield must be grounded at both ends to comply with EMC requirements; observe cable specifications*
4 *Analog display unit: observe maximum load → 184*
5 *Pressure measuring device (e.g. Cerabar M, Cerabar S): see requirements*
6 *Transmitter*

Current output 4-20 mA

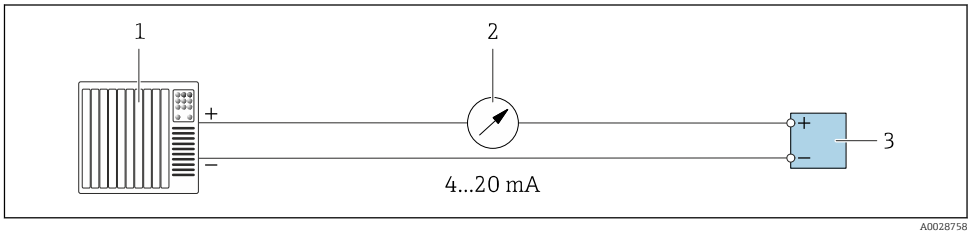

23 *Connection example for 4-20 mA current output (active)*

1 *Automation system with current input (e.g. PLC)*
2 *Analog display unit: observe maximum load → 184*
3 *Transmitter*

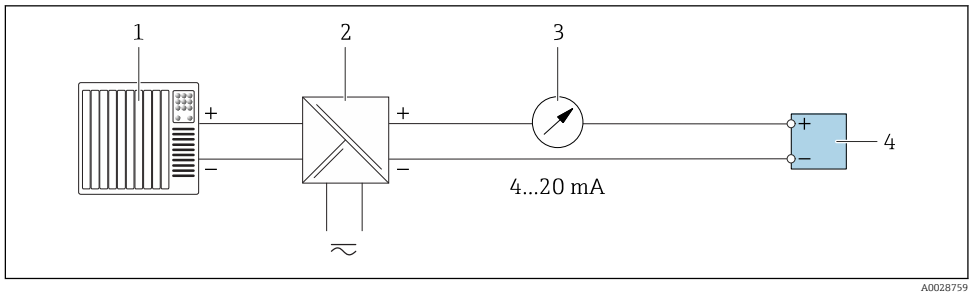

24 *Connection example for 4-20 mA current output (passive)*

1 *Automation system with current input (e.g. PLC)*
2 *Active barrier for power supply (e.g. RN221N)*
3 *Analog display unit: observe maximum load → 184*
4 *Transmitter*

Pulse/frequency output

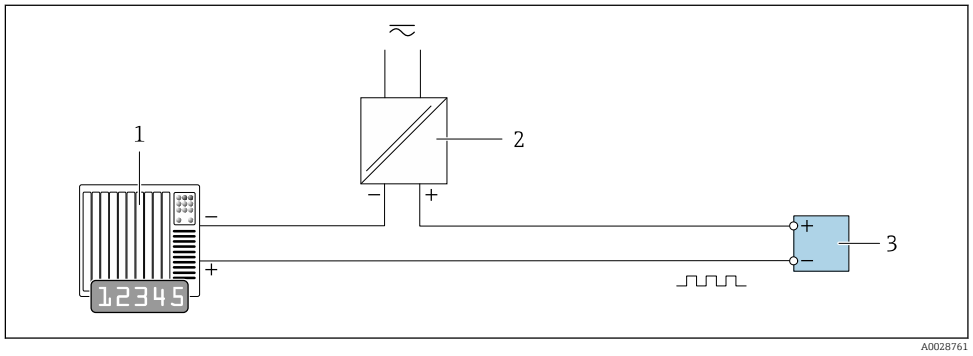

25 *Connection example for pulse/frequency output (passive)*

1 *Automation system with pulse/frequency input (e.g. PLC)*
2 *Power supply*
3 *Transmitter: Observe input values → 186*

Switch output

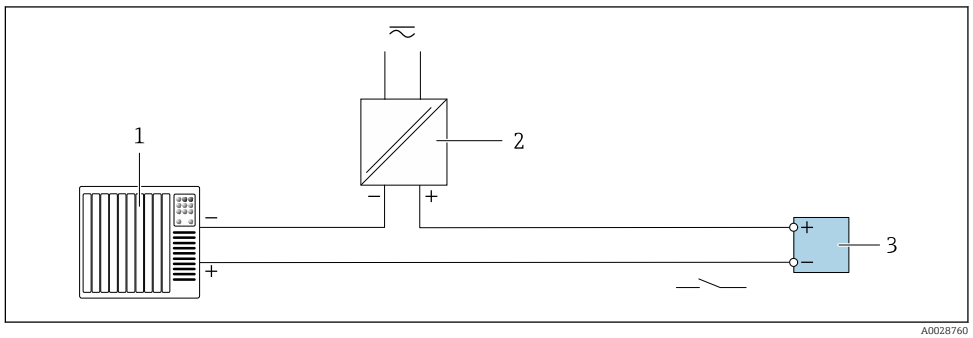

26 *Connection example for switch output (passive)*

1 *Automation system with switch input (e.g. PLC)*
2 *Power supply*
3 *Transmitter: Observe input values → 186*

Double pulse output

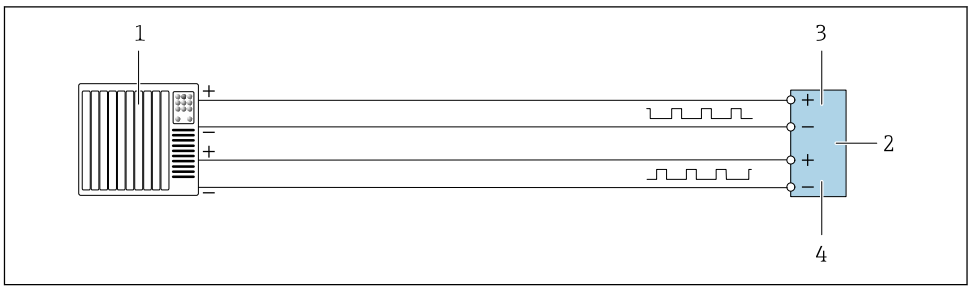

27 *Connection example for double pulse output (active)*

1 *Automation system with double pulse input (e.g. PLC)*
2 *Transmitter: Observe input values → 187*
3 *Double pulse output*
4 *Double pulse output (slave), phase-shifted*

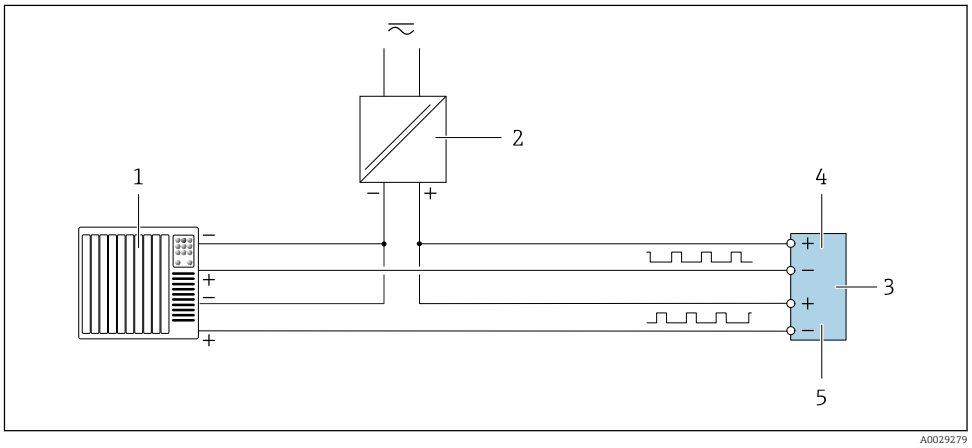

28 *Connection example for double pulse output (passive)*

1 *Automation system with double pulse input (e.g. PLC)*
2 *Power supply*
3 *Transmitter: Observe input values → 187*
4 *Double pulse output*
5 *Double pulse output (slave), phase-shifted*

Relay output

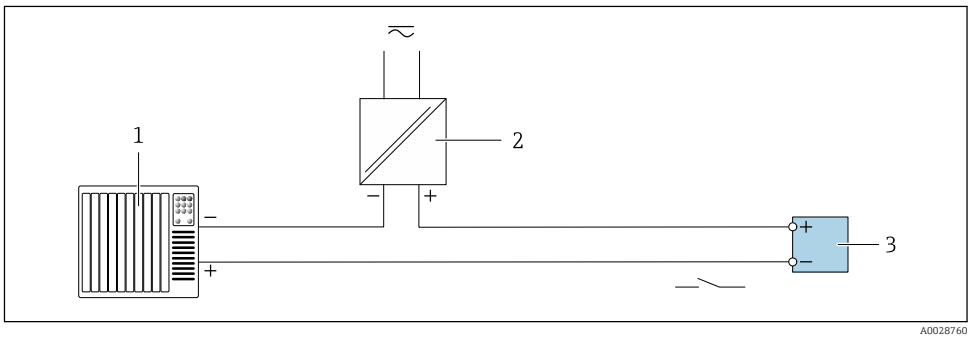

29 *Connection example for relay output (passive)*

1 *Automation system with relay input (e.g. PLC)*
2 *Power supply*
3 *Transmitter: Observe input values → 187*

Current input

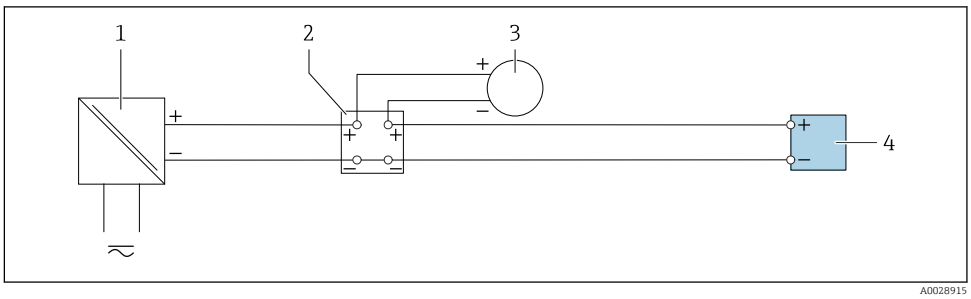

30 *Connection example for 4 to 20 mA current input*

1 *Power supply*
2 *Terminal box*
3 *External measuring device (to read in pressure or temperature, for instance)*
4 *Transmitter*

Status input

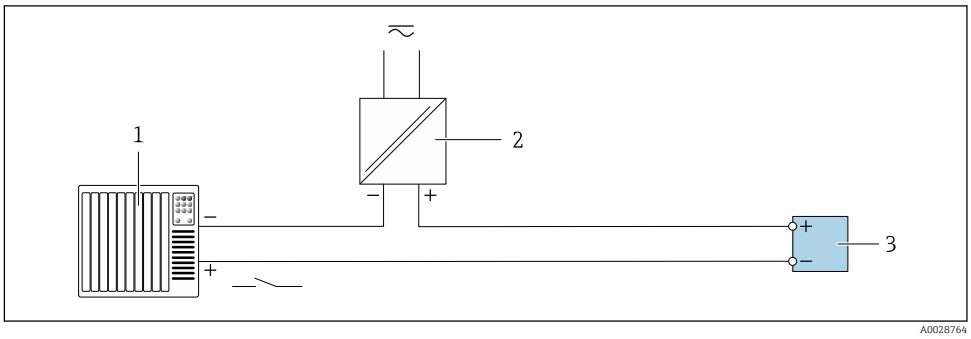

31 *Connection example for status input*

1 *Automation system with status output (e.g. PLC)*
2 *Power supply*
3 *Transmitter*

7.6 Ensuring the degree of protection

The measuring device fulfills all the requirements for the IP66/67 degree of protection, Type 4X enclosure.

To guarantee IP66/67 degree of protection, Type 4X enclosure, carry out the following steps after the electrical connection:

1. Check that the housing seals are clean and fitted correctly.
2. Dry, clean or replace the seals if necessary.
3. Tighten all housing screws and screw covers.
4. Firmly tighten the cable glands.

5. To ensure that moisture does not enter the cable entry:
   Route the cable so that it loops down before the cable entry ("water trap").
   ↳

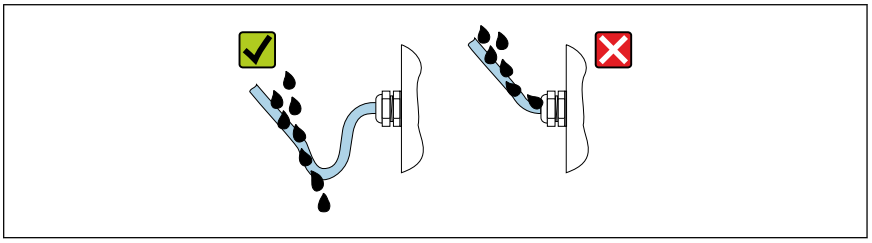

A0029278

6. Insert dummy plugs into unused cable entries.

7.7 Post-connection check

Are cables or the device undamaged (visual inspection)?	❑
Do the cables used meet the requirements?	❑
Do the cables have adequate strain relief?	❑
Are all the cable glands installed, firmly tightened and leak-tight? Cable run with "water trap" → 🖹 62?	❑
Is the potential equalization established correctly ?	❑

8 Operation options

8.1 Overview of operation options

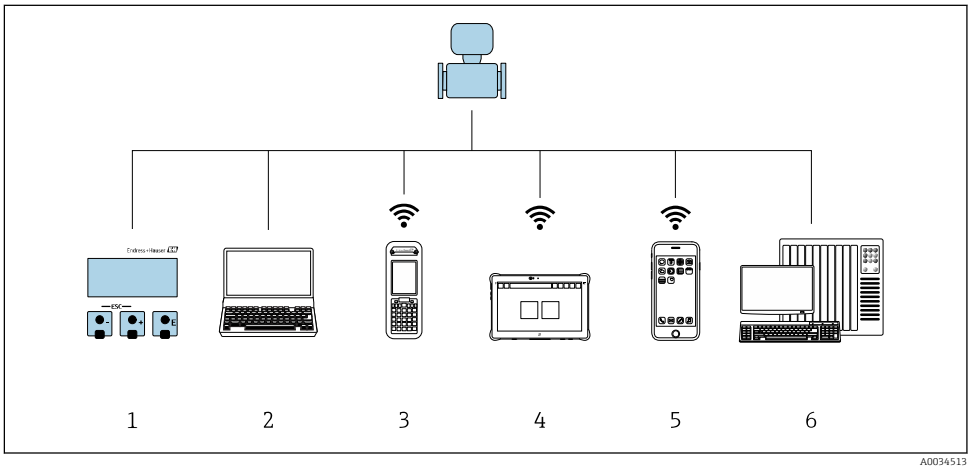

1 *Local operation via display module*
2 *Computer with Web browser (e.g. Internet Explorer) or with operating tool (e.g. FieldCare, DeviceCare, AMS Device Manager, SIMATIC PDM)*
3 *Field Xpert SFX350 or SFX370*
4 *Field Xpert SMT70*
5 *Mobile handheld terminal*
6 *Control system (e.g. PLC)*

8.2 Structure and function of the operating menu

8.2.1 Structure of the operating menu

For an overview of the operating menu for experts: "Description of Device Parameters" document supplied with the device→ 208

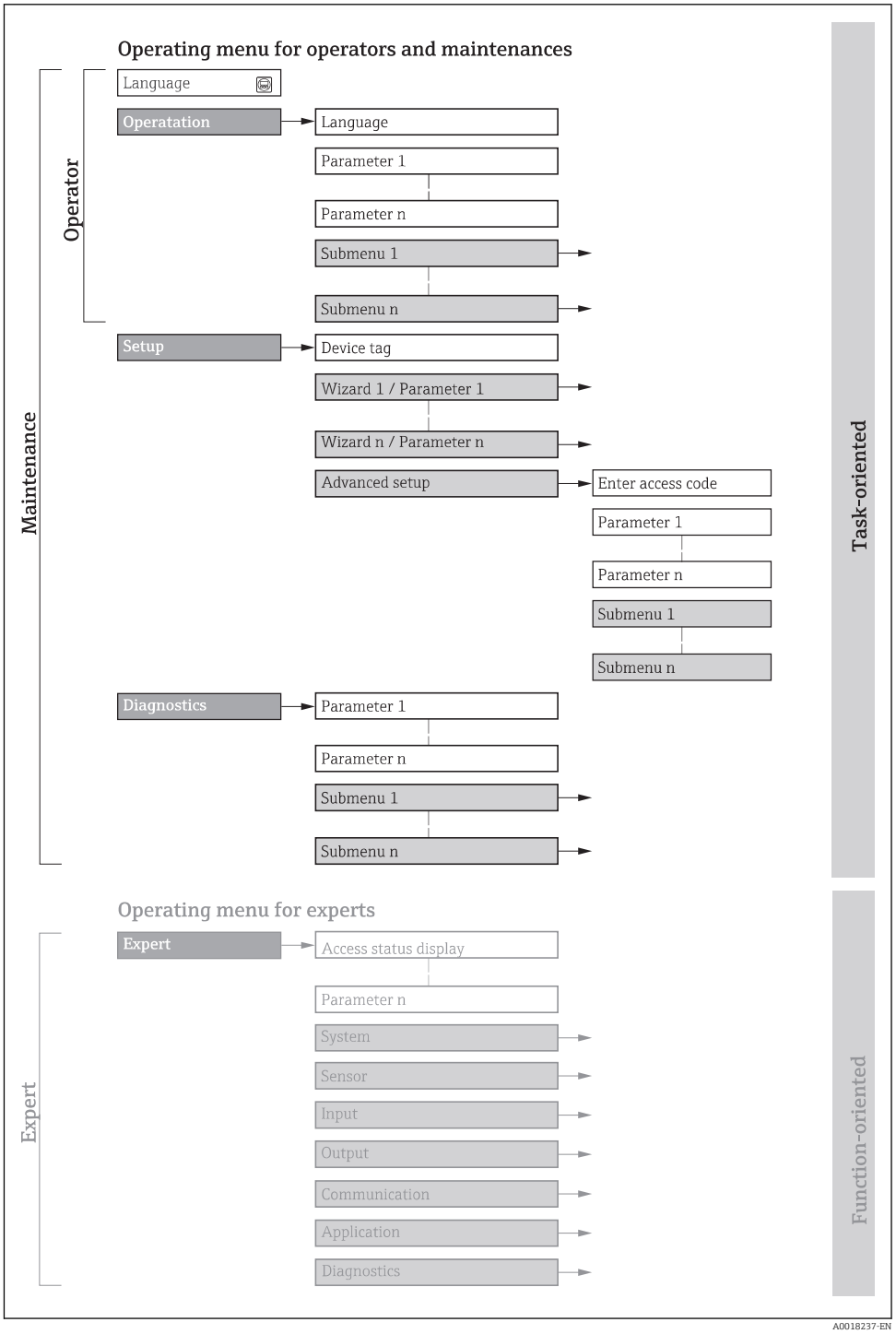

32 *Schematic structure of the operating menu*

8.2.2 Operating philosophy

The individual parts of the operating menu are assigned to certain user roles (operator, maintenance etc.). Each user role contains typical tasks within the device lifecycle.

Menu/parameter		User role and tasks	Content/meaning
Language	task-oriented	**Role "Operator", "Maintenance"** Tasks during operation: ▪ Configuring the operational display ▪ Reading measured values	▪ Defining the operating language ▪ Defining the Web server operating language ▪ Resetting and controlling totalizers
Operation			▪ Configuring the operational display (e.g. display format, display contrast) ▪ Resetting and controlling totalizers
Setup		**"Maintenance" role** Commissioning: ▪ Configuration of the measurement ▪ Configuration of the inputs and outputs ▪ Configuration of the communication interface	Wizards for fast commissioning: ▪ Setting the system units ▪ Displaying the I/O/configuration ▪ Configuring the inputs ▪ Configuring the outputs ▪ Configuration of the operational display ▪ Setting the low flow cut off ▪ Configuring empty pipe detection Advanced setup ▪ For more customized configuration of the measurement (adaptation to special measuring conditions) ▪ Configuration of totalizers ▪ Configuration of electrode cleaning (optional) ▪ Configuring the WLAN settings ▪ Administration (define access code, reset measuring device)
Diagnostics		**"Maintenance" role** Fault elimination: ▪ Diagnostics and elimination of process and device errors ▪ Measured value simulation	Contains all parameters for error detection and analyzing process and device errors: ▪ Diagnostic list Contains up to 5 currently pending diagnostic messages. ▪ Event logbook Contains event messages that have occurred. ▪ Device information Contains information for identifying the device. ▪ Measured values Contains all current measured values. ▪ **Data logging** submenu with "Extended HistoROM" order option Storage and visualization of measured values ▪ Heartbeat The functionality of the device is checked on demand and the verification results are documented. ▪ Simulation Is used to simulate measured values or output values.
Expert	function-oriented	Tasks that require detailed knowledge of the function of the device: ▪ Commissioning measurements under difficult conditions ▪ Optimal adaptation of the measurement to difficult conditions ▪ Detailed configuration of the communication interface ▪ Error diagnostics in difficult cases	Contains all the parameters of the device and makes it possible to access these parameters directly using an access code. The structure of this menu is based on the function blocks of the device: ▪ System Contains all higher-order device parameters which do not concern the measurement or the communication interface. ▪ Sensor Configuration of the measurement. ▪ Input Configuration of the status input. ▪ Output Configuration of the analog current outputs as well as the pulse/frequency and switch output. ▪ Communication Configuration of the digital communication interface and the Web server. ▪ Application Configuration of the functions that go beyond the actual measurement (e.g. totalizer). ▪ Diagnostics Error detection and analysis of process and device errors and for device simulation and Heartbeat Technology.

8.3 Access to the operating menu via the local display

8.3.1 Operational display

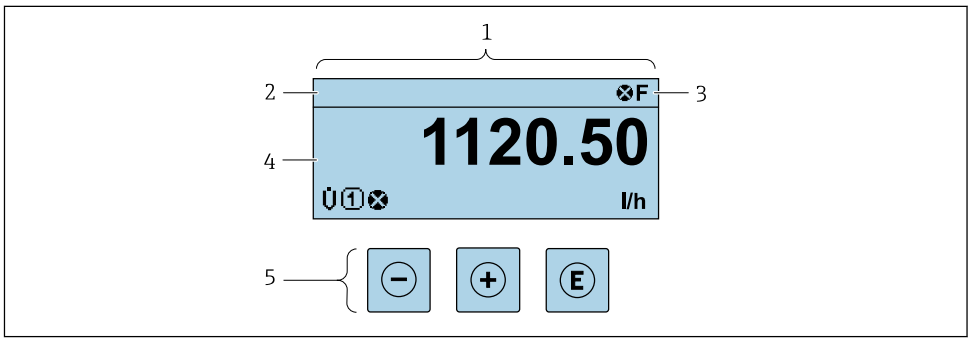

1 *Operational display*
2 *Device tag* → 🖹 97
3 *Status area*
4 *Display area for measured values (4-line)*
5 *Operating elements* → 🖹 72

Status area

The following symbols appear in the status area of the operational display at the top right:
- Status signals → 🖹 154
  - **F**: Failure
  - **C**: Function check
  - **S**: Out of specification
  - **M**: Maintenance required
- Diagnostic behavior → 🖹 155
  - ⊗: Alarm
  - ⚠: Warning
- 🔒: Locking (the device is locked via the hardware)
- ⇆: Communication (communication via remote operation is active)

Display area

In the display area, each measured value is prefaced by certain symbol types for further description:

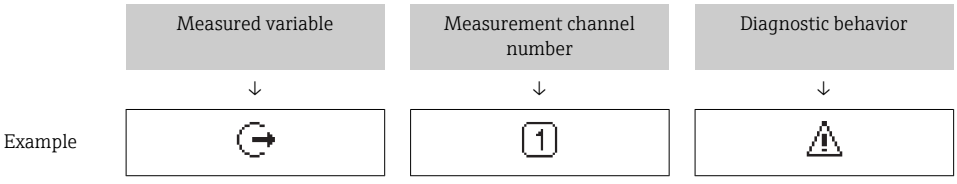

Appears only if a diagnostics event is present for this measured variable.

Measured values

Symbol	Meaning
U̇	Volume flow
G	Conductivity

	Mass flow
	Totalizer The measurement channel number indicates which of the three totalizers is displayed.
	Output The measurement channel number indicates which of the outputs is displayed.
	Status input

Measurement channel numbers

Symbol	Meaning
1 ... 4	Measurement channel 1 to 4
The measurement channel number is displayed only if more than one channel is present for the same measured variable type (e.g. Totalizer 1 to 3).	

Diagnostic behavior

The diagnostic behavior pertains to a diagnostic event that is relevant to the displayed measured variable. For information on the symbols → 155

The number and display format of the measured values can be configured via the **Format display** parameter (→ 112).

8.3.2 Navigation view

In the submenu	In the wizard
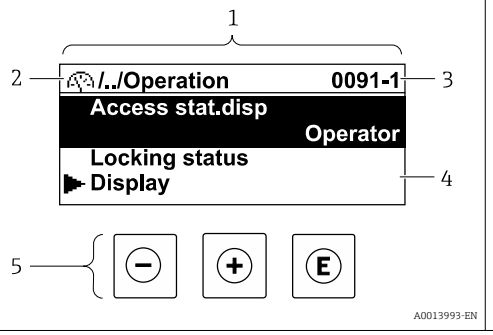	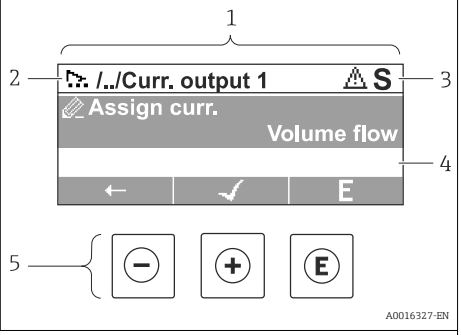

1 Navigation view
2 Navigation path to current position
3 Status area
4 Display area for navigation
5 Operating elements → 72

Navigation path

The navigation path - displayed at the top left in the navigation view - consists of the following elements:

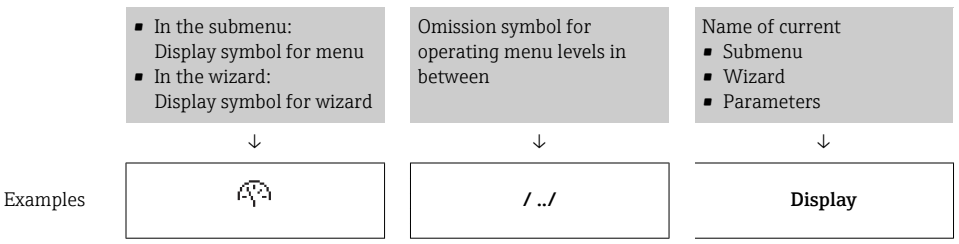

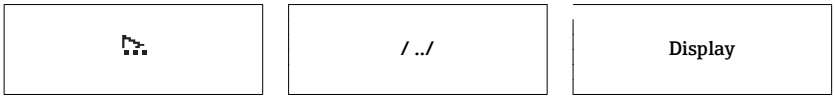

For more information about the icons in the menu, refer to the "Display area" section → 69

Status area

The following appears in the status area of the navigation view in the top right corner:
- In the submenu
  - The direct access code for the parameter you are navigating to (e.g. 0022-1)
  - If a diagnostic event is present, the diagnostic behavior and status signal
- In the wizard
  If a diagnostic event is present, the diagnostic behavior and status signal

- For information on the diagnostic behavior and status signal → 154
- For information on the function and entry of the direct access code → 74

Display area

Menus

Symbol	Meaning
	Operation Appears: ▪ In the menu next to the "Operation" selection ▪ At the left in the navigation path in the **Operation** menu
	Setup Appears: ▪ In the menu next to the "Setup" selection ▪ At the left in the navigation path in the **Setup** menu
	Diagnostics Appears: ▪ In the menu next to the "Diagnostics" selection ▪ At the left in the navigation path in the **Diagnostics** menu
	Expert Appears: ▪ In the menu next to the "Expert" selection ▪ At the left in the navigation path in the **Expert** menu

Submenus, wizards, parameters

Symbol	Meaning
	Submenu
	Wizard
	Parameters within a wizard No display symbol exists for parameters in submenus.

Locking

Symbol	Meaning
	Parameter locked When displayed in front of a parameter name, indicates that the parameter is locked. ▪ By a user-specific access code ▪ By the hardware write protection switch

Wizard operation

Symbol	Meaning
	Switches to the previous parameter.
	Confirms the parameter value and switches to the next parameter.
	Opens the editing view of the parameter.

8.3.3 Editing view

Numeric editor

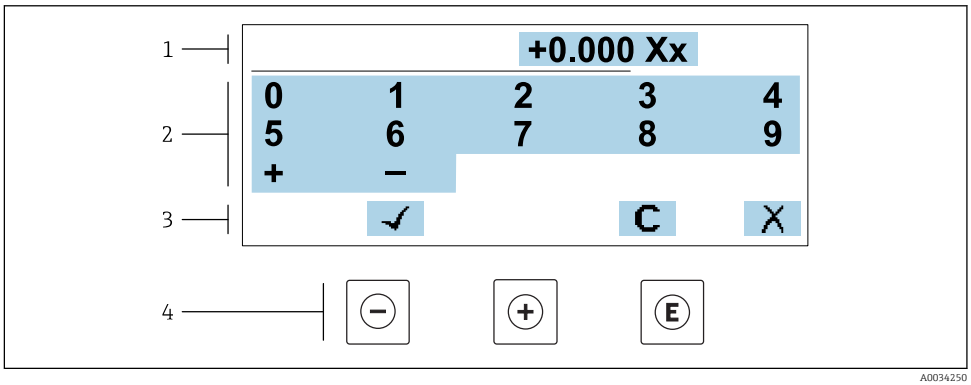

33 *For entering values in parameters (e.g. limit values)*

1 *Entry display area*
2 *Input screen*
3 *Confirm, delete or reject entry*
4 *Operating elements*

Text editor

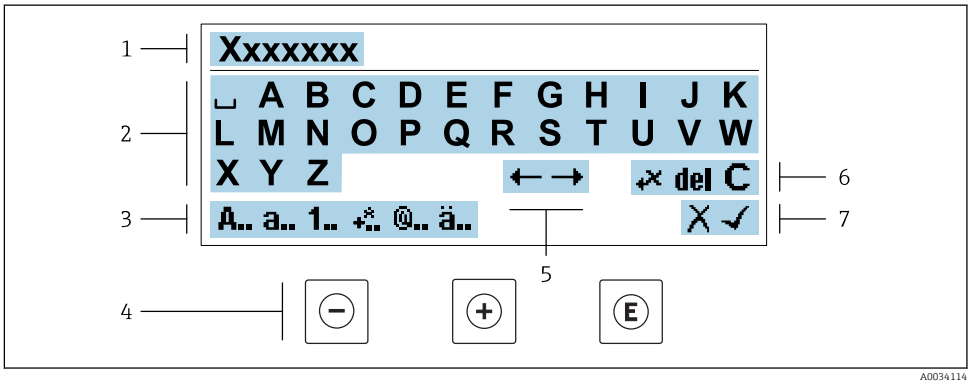

34 *For entering text in parameters (e.g. tag name)*

1 *Entry display area*
2 *Current input screen*
3 *Change input screen*
4 *Operating elements*
5 *Move entry position*
6 *Delete entry*
7 *Reject or confirm entry*

Using the operating elements in the editing view

Operating key(s)	Meaning
	**Minus key** Move the entry position to the left.
	**Plus key** Move the entry position to the right.
	**Enter key** ▪ Press the key briefly: confirm your selection. ▪ Press the key for 2 s: confirm the entry.
	**Escape key combination (press keys simultaneously)** Close the editing view without accepting the changes.

Input screens

Symbol	Meaning
	Upper case
	Lower case
	Numbers
	Punctuation marks and special characters: = + − * / ² ³ ¼ ½ ¾ ( ) [ ] < > { }
	Punctuation marks and special characters: ' " ` ^ . , ; : ? ! % µ ° € $ £ ¥ § @ # / \ I ~ & _
	Umlauts and accents

Controlling data entries

Symbol	Meaning
	Move entry position
	Reject entry
	Confirm entry
	Delete character immediately to the left of the entry position
	Delete character immediately to the right of the entry position
	Clear all the characters entered

8.3.4 Operating elements

Operating key(s)	Meaning
	**Minus key** *In a menu, submenu* Moves the selection bar upwards in a picklist. *With a Wizard* Confirms the parameter value and goes to the previous parameter. *With a text and numeric editor* Move the entry position to the left.
	**Plus key** *In a menu, submenu* Moves the selection bar downwards in a picklist. *With a Wizard* Confirms the parameter value and goes to the next parameter. *With a text and numeric editor* Move the entry position to the right.

	**Enter key**
	For operational display
	Pressing the key briefly opens the operating menu.
	In a menu, submenu
	▪ Pressing the key briefly:
	  ▪ Opens the selected menu, submenu or parameter.
	  ▪ Starts the wizard.
	  ▪ If help text is open, closes the help text of the parameter.
	▪ Pressing the key for 2 s for parameter:
	  If present, opens the help text for the function of the parameter.
	With a Wizard
	Opens the editing view of the parameter.
	With a text and numeric editor
	▪ Press the key briefly: confirm your selection.
	▪ Press the key for 2 s: confirm the entry.

	**Escape key combination (press keys simultaneously)**
	In a menu, submenu
	▪ Pressing the key briefly:
	  ▪ Exits the current menu level and takes you to the next higher level.
	  ▪ If help text is open, closes the help text of the parameter.
	▪ Pressing the key for 2 s returns you to the operational display ("home position").
	With a Wizard
	Exits the wizard and takes you to the next higher level.
	With a text and numeric editor
	Close the editing view without accepting the changes.

	**Minus/Enter key combination (press the keys simultaneously)**
	▪ If the keypad lock is active:
	  Press the key for 3 s: deactivate the keypad lock.
	▪ If the keypad lock is not active:
	  Press the key for 3 s: the context menu opens along with the option for activating the keypad lock.

8.3.5 Opening the context menu

Using the context menu, the user can call up the following menus quickly and directly from the operational display:

- Setup
- Data backup
- Simulation

Calling up and closing the context menu

The user is in the operational display.

1. Press the ⊖ and Ⓔ keys for longer than 3 seconds.
   ↳ The context menu opens.

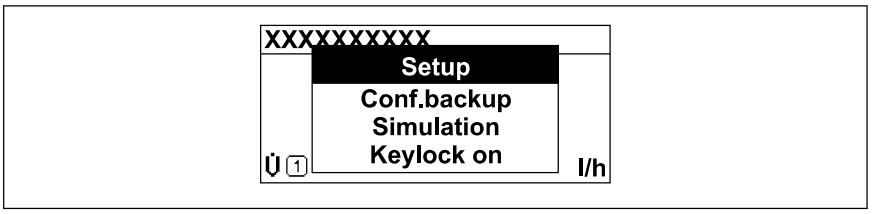

2. Press ⊖ + ⊕ simultaneously.
   ↳ The context menu is closed and the operational display appears.

Calling up the menu via the context menu

1. Open the context menu.
2. Press ⊕ to navigate to the desired menu.
3. Press Ⓔ to confirm the selection.
   ↳ The selected menu opens.

8.3.6 Navigating and selecting from list

Different operating elements are used to navigate through the operating menu. The navigation path is displayed on the left in the header. Icons are displayed in front of the individual menus. These icons are also shown in the header during navigation.

For an explanation of the navigation view with symbols and operating elements
→ 68

Example: Setting the number of displayed measured values to "2 values"

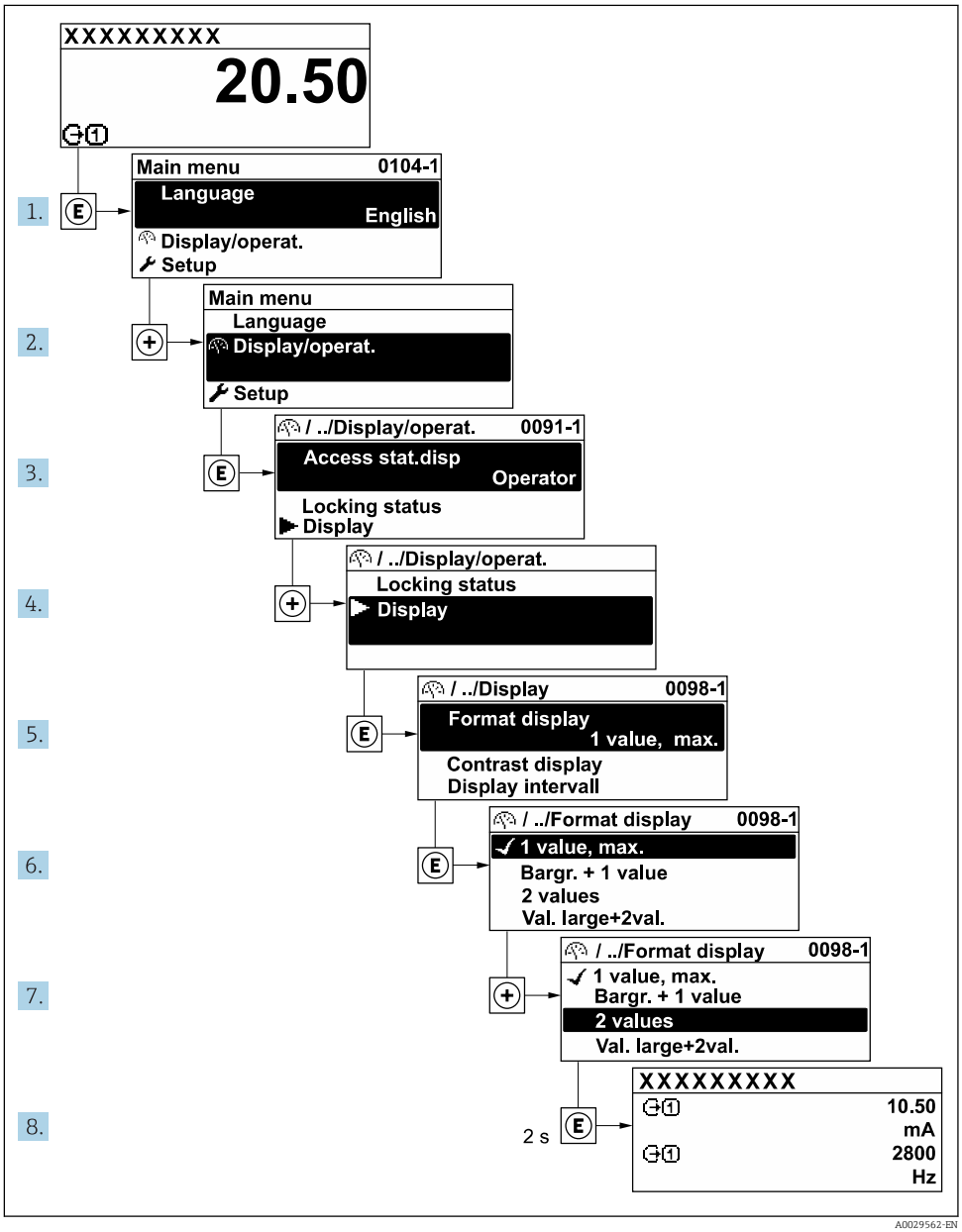

8.3.7 Calling the parameter directly

A parameter number is assigned to every parameter to be able to access a parameter directly via the onsite display. Entering this access code in the **Direct access** parameter calls up the desired parameter directly.

Navigation path
Expert → Direct access

The direct access code consists of a 5-digit number (at maximum) and the channel number, which identifies the channel of a process variable: e.g. 00914-2. In the navigation view, this appears on the right-hand side in the header of the selected parameter.

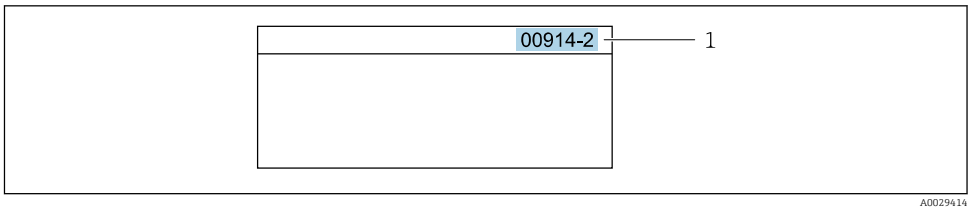

1 Direct access code

Note the following when entering the direct access code:
- The leading zeros in the direct access code do not have to be entered.
  Example: Enter **"914"** instead of **"00914"**
- If no channel number is entered, channel 1 is accessed automatically.
  Example: Enter **00914** → **Assign process variable** parameter
- If a different channel is accessed: Enter the direct access code with the corresponding channel number.
  Example: Enter **00914-2** → **Assign process variable** parameter

For the direct access codes of the individual parameters, see the "Description of Device Parameters" document for the device

8.3.8 Calling up help text

Help text is available for some parameters and can be called up from the navigation view. The help text provides a brief explanation of the parameter function and thereby supports swift and safe commissioning.

Calling up and closing the help text

The user is in the navigation view and the selection bar is on a parameter.

1. Press E for 2 s.
   ↳ The help text for the selected parameter opens.

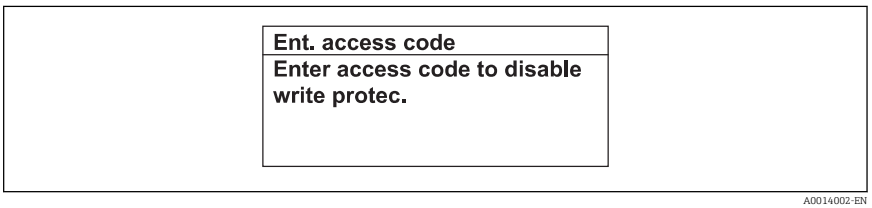

35 Example: Help text for parameter "Enter access code"

2. Press − + + simultaneously.
   ↳ The help text is closed.

8.3.9 Changing the parameters

Parameters can be changed via the numeric editor or text editor.
- Numeric editor: Change values in a parameter, e.g. specifications for limit values.
- Text editor: Enter text in a parameter, e.g. tag name.

A message is displayed if the value entered is outside the permitted value range.

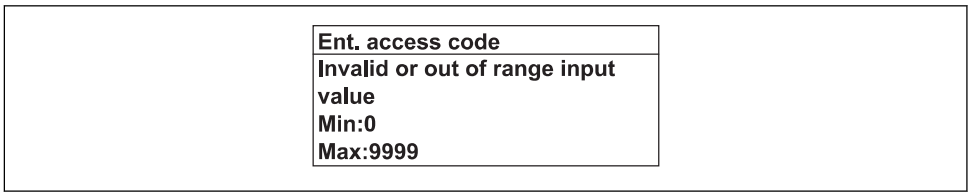

For a description of the editing view - consisting of the text editor and numeric editor - with symbols → 70, for a description of the operating elements → 72

8.3.10 User roles and related access authorization

The two user roles "Operator" and "Maintenance" have different write access to the parameters if the customer defines a user-specific access code. This protects the device configuration via the local display from unauthorized access → 134.

Defining access authorization for user roles

An access code is not yet defined when the device is delivered from the factory. Access authorization (read and write access) to the device is not restricted and corresponds to the "Maintenance" user role.

- Define the access code.
  - The "Operator" user role is redefined in addition to the "Maintenance" user role. Access authorization differs for the two user roles.

Access authorization to parameters: "Maintenance" user role

Access code status	Read access	Write access
An access code has not yet been defined (factory setting).	✔	✔
After an access code has been defined.	✔	✔ 1)

1) The user only has write access after entering the access code.

Access authorization to parameters: "Operator" user role

Access code status	Read access	Write access
After an access code has been defined.	✔	-- 1)

1) Despite the defined access code, certain parameters can always be modified and thus are excepted from the write protection, as they do not affect the measurement. Refer to the "Write protection via access code" section

The user role with which the user is currently logged on is indicated by the **Access status** parameter. Navigation path: Operation → Access status

8.3.11 Disabling write protection via access code

If the 🔒-symbol appears on the local display in front of a parameter, the parameter is write-protected by a user-specific access code and its value cannot be changed at the moment using local operation → 134.

Parameter write protection via local operation can be disabled by entering the user-specific access code in the **Enter access code** parameter (→ 121) via the respective access option.

1. After you press E, the input prompt for the access code appears.

2. Enter the access code.
   ↳ The 🔒-symbol in front of the parameters disappears; all previously write-protected parameters are now re-enabled.

8.3.12 Enabling and disabling the keypad lock

The keypad lock makes it possible to block access to the entire operating menu via local operation. As a result, it is no longer possible to navigate through the operating menu or change the values of individual parameters. Users can only read the measured values on the operational display.

The keypad lock is switched on and off via the context menu.

Switching on the keypad lock

The keypad lock is switched on automatically:
- If the device has not been operated via the display for > 1 minute.
- Each time the device is restarted.

To activate the keylock manually:

1. The device is in the measured value display.
   Press the ⊟ and Ⓔ keys for 3 seconds.
   ↳ A context menu appears.
2. In the context menu select the **Keylock on** option.
   ↳ The keypad lock is switched on.

If the user attempts to access the operating menu while the keypad lock is active, the **Keylock on** message appears.

Switching off the keypad lock

▶ The keypad lock is switched on.
Press the ⊟ and Ⓔ keys for 3 seconds.
↳ The keypad lock is switched off.

8.4 Access to the operating menu via the Web browser

8.4.1 Function range

Thanks to the integrated Web server, the device can be operated and configured via a Web browser and via a service interface (CDI-RJ45) or via a WLAN interface. The structure of the operating menu is the same as for the local display. In addition to the measured values, status information on the device is also displayed and allows the user to monitor the status of the device. Furthermore the device data can be managed and the network parameters can be configured.

A device that has a WLAN interface (can be ordered as an option) is required for the WLAN connection: order code for "Display; operation", option G "4-line, illuminated; touch control + WLAN". The device acts as an Access Point and enables communication by computer or a mobile handheld terminal.

For additional information on the Web server, refer to the Special Documentation for the device

8.4.2 Prerequisites

Computer hardware

Hardware	Interface	
	CDI-RJ45	WLAN
Interface	The computer must have an RJ45 interface.	The operating unit must have a WLAN interface.
Connection	Standard Ethernet cable with RJ45 connector.	Connection via Wireless LAN.
Screen	Recommended size: ≥12" (depends on the screen resolution)	

Computer software

Software	Interface	
	CDI-RJ45	WLAN

Recommended operating systems	▪ Microsoft Windows 7 or higher.
	▪ Mobile operating systems:
	  ▪ iOS
	  ▪ Android
	Microsoft Windows XP is supported.	

Web browsers supported	▪ Microsoft Internet Explorer 8 or higher ▪ Microsoft Edge ▪ Mozilla Firefox ▪ Google Chrome ▪ Safari	

Computer settings

Settings	Interface	
	CDI-RJ45	WLAN
User rights	Appropriate user rights (e.g. administrator rights) for TCP/IP and proxy server settings are necessary (for adjusting the IP address, subnet mask etc.).	
Proxy server settings of the Web browser	The Web browser setting *Use a Proxy Server for Your LAN* must be **deselected** .	
JavaScript	JavaScript must be enabled. If JavaScript cannot be enabled: enter http://192.168.1.212/basic.html in the address line of the Web browser. A fully functional but simplified version of the operating menu structure starts in the Web browser. When installing a new firmware version: To enable correct data display, clear the temporary memory (cache) of the Web browser under **Internet options**.	
Network connections	Only the active network connections to the measuring device should be used.	
	Switch off all other network connections such as WLAN.	Switch off all other network connections.

In the event of connection problems: → 149

Measuring device: Via CDI-RJ45 service interface

Device	CDI-RJ45 service interface
Measuring device	The measuring device has an RJ45 interface.
Web server	Web server must be enabled; factory setting: ON For information on enabling the Web server → 83

Measuring device: via WLAN interface

Device	WLAN interface
Measuring device	The measuring device has a WLAN antenna: ▪ Transmitter with integrated WLAN antenna ▪ Transmitter with external WLAN antenna
Web server	Web server and WLAN must be enabled; factory setting: ON For information on enabling the Web server → 83

8.4.3 Establishing a connection

Via service interface (CDI-RJ45)

Preparing the measuring device

Proline 500 – digital

1. Loosen the 4 fixing screws on the housing cover.
2. Open the housing cover.
3. The location of the connection socket depends on the measuring device and the communication protocol:
   Connect the computer to the RJ45 connector via the standard Ethernet connecting cable .

Proline 500

1. Depending on the housing version:
   Release the securing clamp or securing screw of the housing cover.
2. Depending on the housing version:
   Unscrew or open the housing cover.
3. The location of the connection socket depends on the measuring device and the communication protocol:
   Connect the computer to the RJ45 connector via the standard Ethernet connecting cable .

Configuring the Internet protocol of the computer

The following information refers to the default Ethernet settings of the device.

IP address of the device: 192.168.1.212 (factory setting)

1. Switch on the measuring device.
2. Connect to the computer using a cable → 85.
3. If a 2nd network card is not used, close all the applications on the notebook.
   ↳ Applications requiring Internet or a network, such as e-mail, SAP applications, Internet or Windows Explorer.
4. Close any open Internet browsers.
5. Configure the properties of the Internet protocol (TCP/IP) as defined in the table:

IP address	192.168.1.XXX; for XXX all numerical sequences except: 0, 212 and 255 → e.g. 192.168.1.213
Subnet mask	255.255.255.0
Default gateway	192.168.1.212 or leave cells empty

Via WLAN interface

Configuring the Internet protocol of the mobile terminal

NOTICE

If the WLAN connection is lost during the configuration, settings made may be lost.

- Make sure that the WLAN connection is not disconnected while configuring the device.

NOTICE

In principle, avoid simultaneous access to the measuring device via the service interface (CDI-RJ45) and the WLAN interface from the same mobile terminal. This could cause a network conflict.

- Only activate one service interface (CDI-RJ45 service interface or WLAN interface).
- If simultaneous communication is necessary: configure different IP address ranges, e.g. 192.168.0.1 (WLAN interface) and 192.168.1.212 (CDI-RJ45 service interface).

Preparing the mobile terminal

- Enable WLAN reception on the mobile terminal.

Establishing a connection from the mobile terminal to the measuring device

1. In the WLAN settings of the mobile terminal:
   Select the measuring device using the SSID (e.g. EH_Promag_500_A802000).
2. If necessary, select the WPA2 encryption method.
3. Enter the password: serial number of the measuring device ex-works (e.g. L100A802000).
   ↳ LED on display module flashes: it is now possible to operate the measuring device with the Web browser, FieldCare or DeviceCare.

The serial number can be found on the nameplate.

To ensure the safe and swift assignment of the WLAN network to the measuring point, it is advisable to change the SSID name. It should be possible to clearly assign the new SSID name to the measuring point (e.g. tag name) because it is displayed as the WLAN network.

Disconnecting

- After configuring the device:
  Terminate the WLAN connection between the operating unit and measuring device.

Starting the Web browser

1. Start the Web browser on the computer.

2. Enter the IP address of the Web server in the address line of the Web browser: 192.168.1.212
   ↳ The login page appears.

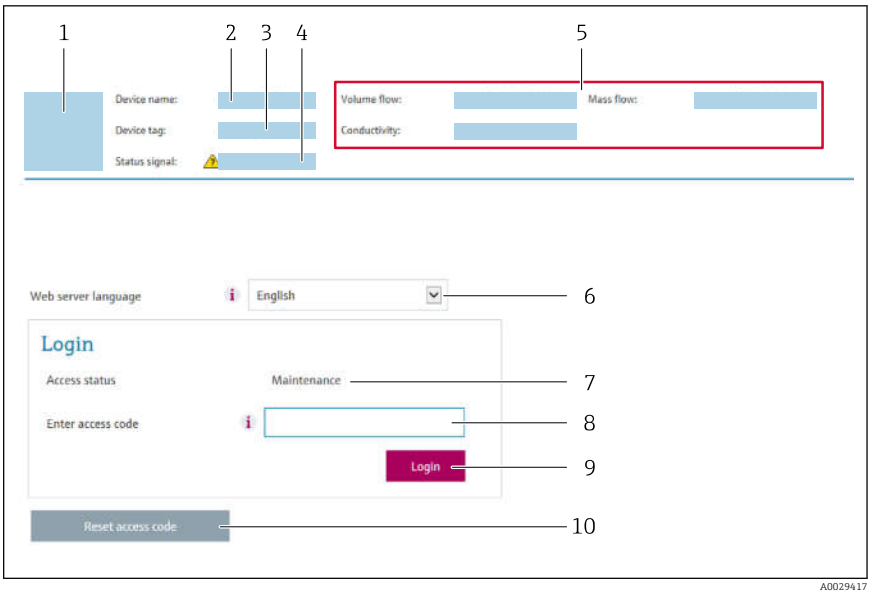

1 *Picture of device*
2 *Device name*
3 *Device tag (→ 97)*
4 *Status signal*
5 *Current measured values*
6 *Operating language*
7 *User role*
8 *Access code*
9 *Login*
10 *Reset access code (→ 131)*

If a login page does not appear, or if the page is incomplete → 149

8.4.4 Logging on

1. Select the preferred operating language for the Web browser.
2. Enter the user-specific access code.
3. Press **OK** to confirm your entry.

Access code	0000 (factory setting); can be changed by customer

If no action is performed for 10 minutes, the Web browser automatically returns to the login page.

8.4.5 User interface

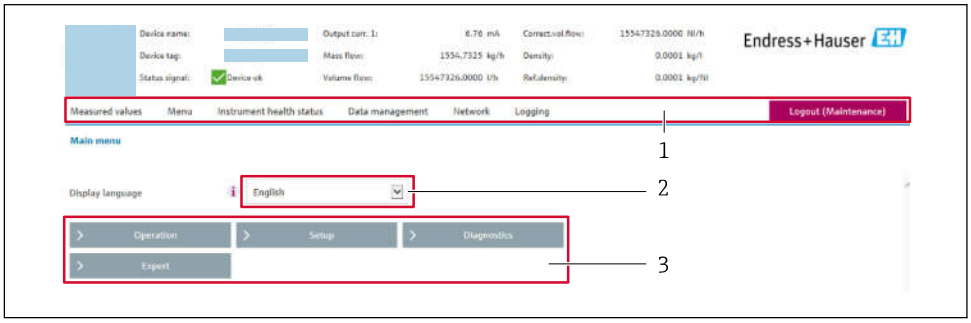

1 Function row
2 Local display language
3 Navigation area

Header

The following information appears in the header:
- Device name
- Device tag
- Device status with status signal → 157
- Current measured values

Function row

Functions	Meaning
Measured values	Displays the measured values of the measuring device
Menu	▪ Access to the operating menu from the measuring device ▪ The structure of the operating menu is the same as for the local display For detailed information on the structure of the operating menu, see the Operating Instructions for the measuring device
Device status	Displays the diagnostic messages currently pending, listed in order of priority

Data management	Data exchange between PC and measuring device:
	▪ Device configuration:
	  ▪ Load settings from the device (XML format, save configuration)
	  ▪ Save settings to the device (XML format, restore configuration)
	▪ Logbook - Export Event logbook (.csv file)
	▪ Documents - Export documents:
	  ▪ Export backup data record (.csv file, create documentation of the measuring point configuration)
	  ▪ Verification report (PDF file, only available with the "Heartbeat Verification" application package)
	▪ Firmware update - Flashing a firmware version

Network configuration	Configuration and checking of all the parameters required for establishing the connection to the measuring device: ▪ Network settings (e.g. IP address, MAC address) ▪ Device information (e.g. serial number, firmware version)
Logout	End the operation and call up the login page

Navigation area

If a function is selected in the function bar, the submenus of the function open in the navigation area. The user can now navigate through the menu structure.

Working area

Depending on the selected function and the related submenus, various actions can be performed in this area:
- Configuring parameters
- Reading measured values
- Calling up help text
- Starting an upload/download

8.4.6 Disabling the Web server

The Web server of the measuring device can be switched on and off as required using the **Web server functionality** parameter.

Navigation

"Expert" menu → Communication → Web server

Parameter overview with brief description

Parameter	Description	Selection	Factory setting
Web server functionality	Switch the Web server on and off.	▪ Off ▪ HTML Off ▪ On	On

Function scope of the "Web server functionality" parameter

Option	Description
Off	▪ The web server is completely disabled. ▪ Port 80 is locked.
On	▪ The complete functionality of the web server is available. ▪ JavaScript is used. ▪ The password is transferred in an encrypted state. ▪ Any change to the password is also transferred in an encrypted state.

Enabling the Web server

If the Web server is disabled it can only be re-enabled with the **Web server functionality** parameter via the following operating options:
- Via local display
- Via Bedientool "FieldCare"
- Via "DeviceCare" operating tool

8.4.7 Logging out

Before logging out, perform a data backup via the **Data management** function (upload configuration from device) if necessary.

1. Select the **Logout** entry in the function row.
   ↳ The home page with the Login box appears.
2. Close the Web browser.
3. If no longer needed:
   Reset modified properties of the Internet protocol (TCP/IP) → 79.

8.5 Access to the operating menu via the operating tool

The structure of the operating menu in the operating tools is the same as for operation via the local display.

8.5.1 Connecting the operating tool

Via HART protocol

This communication interface is available in device versions with a HART output.

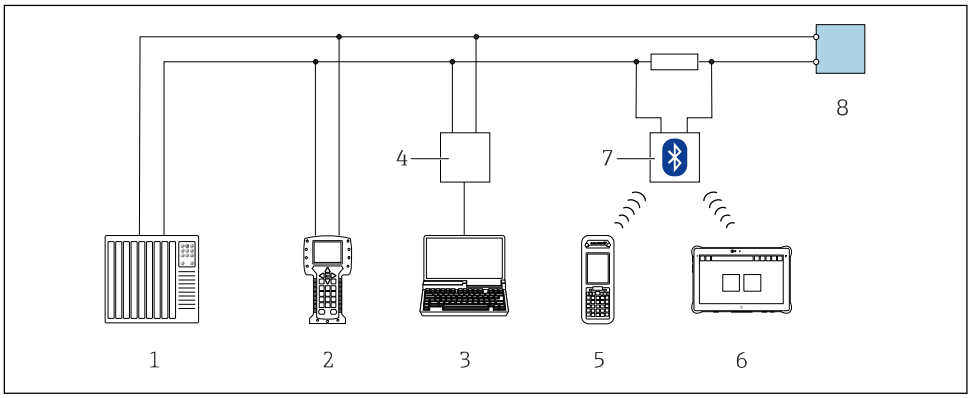

36 *Options for remote operation via HART protocol (active)*

1 *Control system (e.g. PLC)*
2 *Field Communicator 475*
3 *Computer with Web browser (e.g. Internet Explorer) for access to the integrated device Web server or computer with an operating tool (e.g. FieldCare, DeviceCare, AMS Device Manager, SIMATIC PDM) with COM DTM "CDI Communication TCP/IP"*
4 *Commubox FXA195 (USB)*
5 *Field Xpert SFX350 or SFX370*
6 *Field Xpert SMT70*
7 *VIATOR Bluetooth modem with connecting cable*
8 *Transmitter*

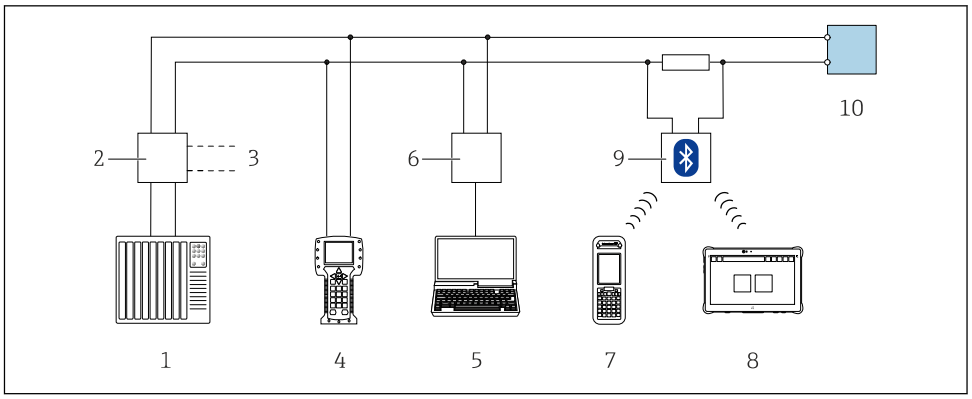

37 *Options for remote operation via HART protocol (passive)*

1 *Control system (e.g. PLC)*
2 *Transmitter power supply unit, e.g. RN221N (with communication resistor)*
3 *Connection for Commubox FXA195 and Field Communicator 475*
4 *Field Communicator 475*
5 *Computer with Web browser (e.g. Internet Explorer) for access to the integrated device Web server or computer with an operating tool (e.g. FieldCare, DeviceCare, AMS Device Manager, SIMATIC PDM) with COM DTM "CDI Communication TCP/IP"*
6 *Commubox FXA195 (USB)*
7 *Field Xpert SFX350 or SFX370*
8 *Field Xpert SMT70*
9 *VIATOR Bluetooth modem with connecting cable*
10 *Transmitter*

Service interface

Via service interface (CDI-RJ45)

A point-to-point connection can be established to configure the device onsite. With the housing open, the connection is established directly via the service interface (CDI-RJ45) of the device.

An adapter for RJ45 and the M12 connector is optionally available:
Order code for "Accessories", option **NB**: "Adapter RJ45 M12 (service interface)"

The adapter connects the service interface (CDI-RJ45) to an M12 connector mounted in the cable entry. Therefore the connection to the service interface can be established via an M12 connector without opening the device.

Proline 500 – digital transmitter

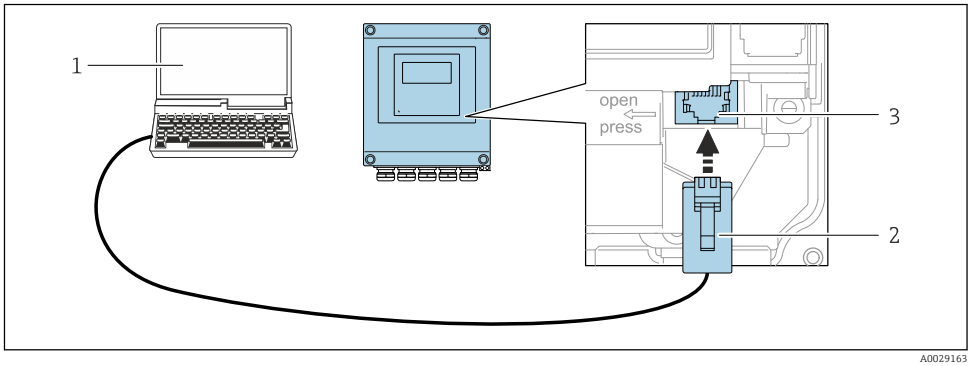

38 *Connection via service interface (CDI-RJ45)*

1 *Computer with Web browser (e.g. Microsoft Internet Explorer, Microsoft Edge) for accessing the integrated device Web server or with "FieldCare", "DeviceCare" operating tool with COM DTM "CDI Communication TCP/IP"*
2 *Standard Ethernet connecting cable with RJ45 connector*
3 *Service interface (CDI-RJ45) of the measuring device with access to the integrated Web server*

Proline 500 transmitter

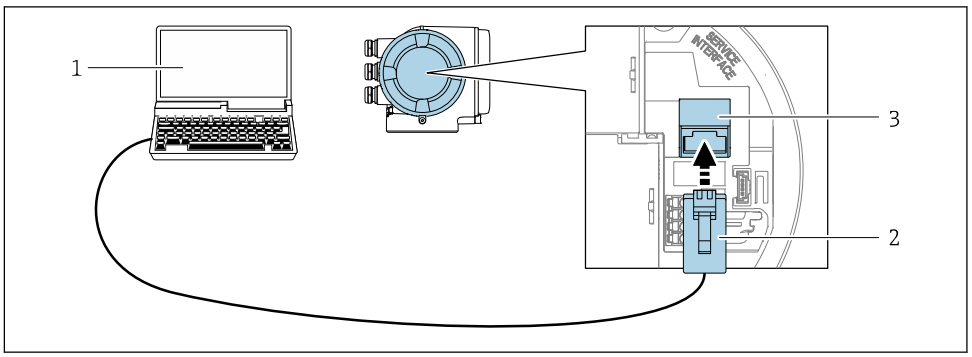

39 Connection via service interface (CDI-RJ45)

1 Computer with Web browser (e.g. Microsoft Internet Explorer, Microsoft Edge) for accessing the integrated device Web server or with "FieldCare", "DeviceCare" operating tool with COM DTM "CDI Communication TCP/IP"
2 Standard Ethernet connecting cable with RJ45 connector
3 Service interface (CDI-RJ45) of the measuring device with access to the integrated Web server

Via WLAN interface

The optional WLAN interface is available on the following device version:
Order code for "Display; operation", option G "4-line, illuminated; touch control + WLAN"

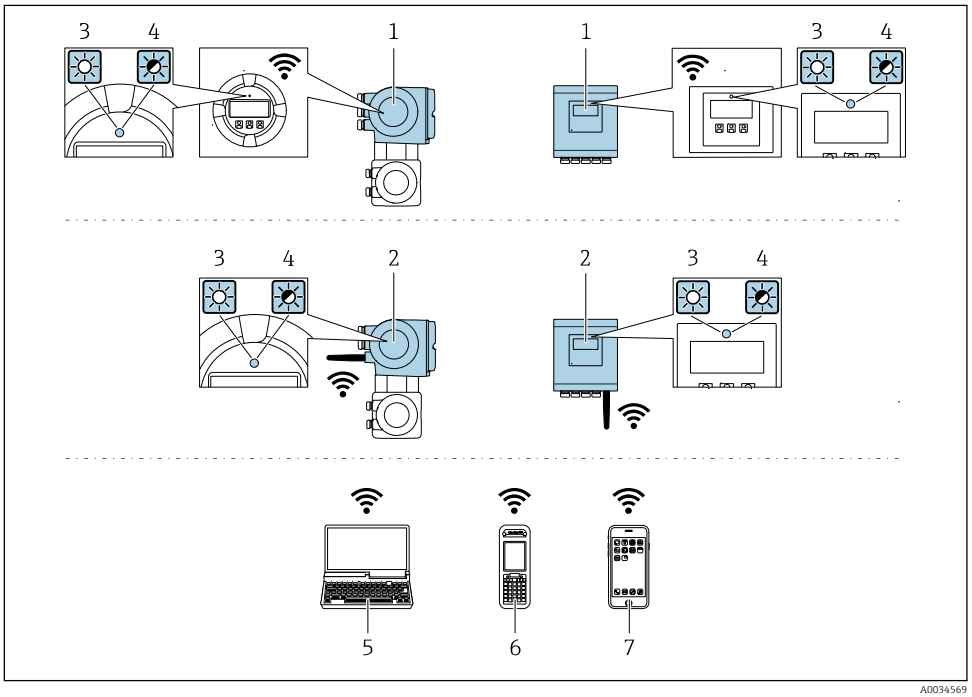

1 Transmitter with integrated WLAN antenna
2 Transmitter with external WLAN antenna
3 LED lit constantly: WLAN reception is enabled on measuring device
4 LED flashing: WLAN connection established between operating unit and measuring device
5 Computer with WLAN interface and Web browser (e.g. Microsoft Internet Explorer, Microsoft Edge) for accessing the integrated device Web server or with operating tool (e.g. FieldCare, DeviceCare)
6 Mobile handheld terminal with WLAN interface and Web browser (e.g. Microsoft Internet Explorer, Microsoft Edge) for accessing the integrated device Web server or operating tool (e.g. FieldCare, DeviceCare)
7 Smart phone or tablet (e.g. Field Xpert SMT70)

Function	WLAN: IEEE 802.11 b/g (2.4 GHz)
Encryption	WPA2-PSK AES-128 (in accordance with IEEE 802.11i)
Configurable WLAN channels	1 to 11
Degree of protection	IP67
Available antennas	▪ Internal antenna ▪ External antenna (optional) In the event of poor transmission/reception conditions at the place of installation. Only one antenna active in each case!
Range	▪ Internal antenna: typically 10 m (32 ft) ▪ External antenna: typically 50 m (164 ft)
Materials (external antenna)	▪ Antenna: ASA plastic (acrylic ester-styrene-acrylonitrile) and nickel-plated brass ▪ Adapter: Stainless steel and nickel-plated brass ▪ Cable: Polyethylene ▪ Connector: Nickel-plated brass ▪ Angle bracket: Stainless steel

Configuring the Internet protocol of the mobile terminal

NOTICE

If the WLAN connection is lost during the configuration, settings made may be lost.

► Make sure that the WLAN connection is not disconnected while configuring the device.

NOTICE

In principle, avoid simultaneous access to the measuring device via the service interface (CDI-RJ45) and the WLAN interface from the same mobile terminal. This could cause a network conflict.

► Only activate one service interface (CDI-RJ45 service interface or WLAN interface).
► If simultaneous communication is necessary: configure different IP address ranges, e.g. 192.168.0.1 (WLAN interface) and 192.168.1.212 (CDI-RJ45 service interface).

Preparing the mobile terminal

► Enable WLAN reception on the mobile terminal.

Establishing a connection from the mobile terminal to the measuring device

1. In the WLAN settings of the mobile terminal:
   Select the measuring device using the SSID (e.g. EH_Promag_500_A802000).
2. If necessary, select the WPA2 encryption method.
3. Enter the password: serial number of the measuring device ex-works (e.g. L100A802000).
   ↳ LED on display module flashes: it is now possible to operate the measuring device with the Web browser, FieldCare or DeviceCare.

The serial number can be found on the nameplate.

To ensure the safe and swift assignment of the WLAN network to the measuring point, it is advisable to change the SSID name. It should be possible to clearly assign the new SSID name to the measuring point (e.g. tag name) because it is displayed as the WLAN network.

Disconnecting

► After configuring the device:
Terminate the WLAN connection between the operating unit and measuring device.

8.5.2 Field Xpert SFX350, SFX370

Function range

Field Xpert SFX350 and Field Xpert SFX370 are mobile computers for commissioning and maintenance. They enable efficient device configuration and diagnostics for HART and FOUNDATION Fieldbus devices in the **non-hazardous area** (SFX350, SFX370) and **hazardous area** (SFX370).

For details, see Operating Instructions BA01202S

Source for device description files

See information → 91

8.5.3 FieldCare

Function scope

FDT-based plant asset management tool from Endress+Hauser. It can configure all smart field devices in a system and helps you manage them. By using the status information, it is also a simple but effective way of checking their status and condition.

Access is via:
- HART protocol
- CDI-RJ45 service interface → 85
- WLAN interface→ 86

Typical functions:
- Configuring parameters of transmitters
- Loading and saving device data (upload/download)
- Documentation of the measuring point
- Visualization of the measured value memory (line recorder) and event logbook

For additional information about FieldCare, see Operating Instructions BA00027S and BA00059S

Source for device description files

See information → 91

Establishing a connection

1. Start FieldCare and launch the project.
2. In the network: Add a device.
   ↳ The **Add device** window opens.
3. Select the **CDI Communication TCP/IP** option from the list and press **OK** to confirm.
4. Right-click **CDI Communication TCP/IP** and select the **Add device** option in the context menu that opens.
5. Select the desired device from the list and press **OK** to confirm.
   ↳ The **CDI Communication TCP/IP (Configuration)** window opens.
6. Enter the device address in the **IP address** field: 192.168.1.212 and press **Enter** to confirm.
7. Establish the online connection to the device.

For additional information, see Operating Instructions BA00027S and BA00059S

User interface

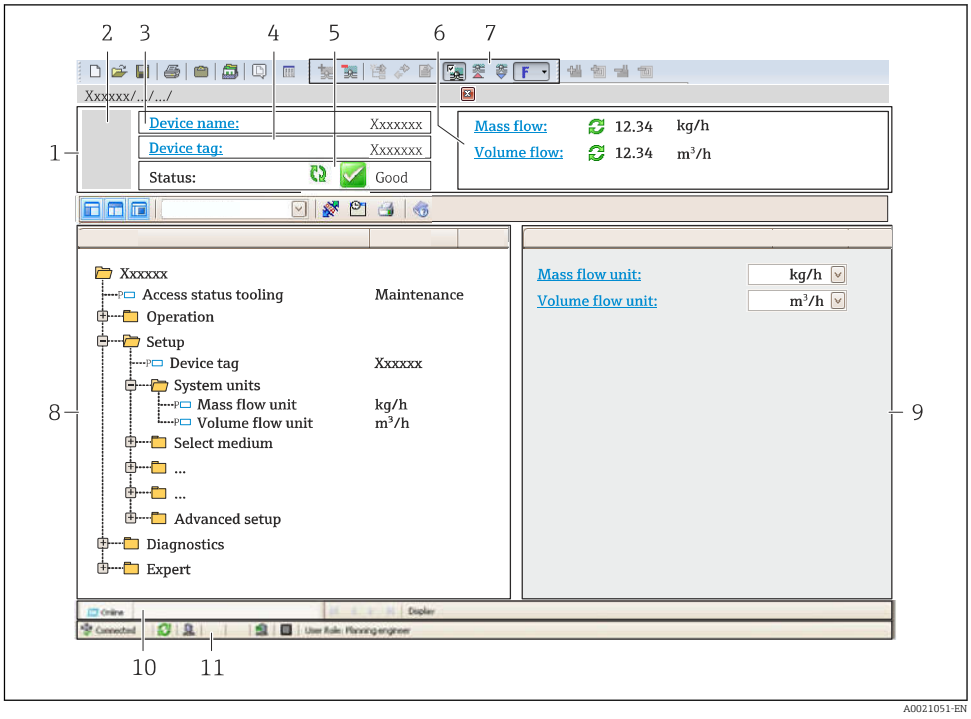

1 *Header*
2 *Picture of device*
3 *Device name*
4 *Device tag*
5 *Status area with status signal→ 157*
6 *Display area for current measured values*
7 *Edit toolbar with additional functions such as save/restore, event list and create documentation*
8 *Navigation area with operating menu structure*
9 *Working area*
10 *Range of action*
11 *Status area*

8.5.4 DeviceCare

Function scope

Tool to connect and configure Endress+Hauser field devices.

The fastest way to configure Endress+Hauser field devices is with the dedicated "DeviceCare" tool. Together with the device type managers (DTMs) it presents a convenient, comprehensive solution.

For details, see Innovation Brochure IN01047S

Source for device description files

See information → 91

8.5.5 AMS Device Manager

Function scope

Program from Emerson Process Management for operating and configuring measuring devices via HART protocol.

Source for device description files

See data → 91

8.5.6 SIMATIC PDM

Function scope

SIMATIC PDM is a standardized, manufacturer-independent program from Siemens for the operation, configuration, maintenance and diagnosis of intelligent field devices via HART protocol.

Source for device description files

See data → 91

8.5.7 Field Communicator 475

Function scope

Industrial handheld terminal from Emerson Process Management for remote configuration and measured value display via HART protocol.

Source for device description files

See data → 91

9 System integration

9.1 Overview of device description files

9.1.1 Current version data for the device

Firmware version	01.05.zz	▪ On the title page of the Operating Instructions ▪ On the transmitter nameplate ▪ Firmware version Diagnostics → Device information → Firmware version
Release date of firmware version	08.2019	---
Manufacturer ID	0x11	Manufacturer ID Diagnostics → Device information → Manufacturer ID
Device type ID	0x3C	Device type Diagnostics → Device information → Device type
HART protocol revision	7	HART revision Expert → Communication → HART output → Information → HART revision
Device revision	1	▪ On the transmitter nameplate ▪ Device revision Diagnostics → Device information → Device revision

For an overview of the different firmware versions for the device → 171

9.1.2 Operating tools

The suitable device description file for the individual operating tools is listed in the table below, along with information on where the file can be acquired.

Operating tool via HART protocol	Sources for obtaining device descriptions
FieldCare	▪ www.endress.com → Download Area ▪ CD-ROM (contact Endress+Hauser) ▪ DVD (contact Endress+Hauser)
DeviceCare	▪ www.endress.com → Download Area ▪ CD-ROM (contact Endress+Hauser) ▪ DVD (contact Endress+Hauser)
▪ Field Xpert SFX350 ▪ Field Xpert SFX370	Use update function of handheld terminal
AMS Device Manager (Emerson Process Management)	www.endress.com → Download Area
SIMATIC PDM (Siemens)	www.endress.com → Download Area
Field Communicator 475 (Emerson Process Management)	Use update function of handheld terminal

9.2 Measured variables via HART protocol

The following measured variables (HART device variables) are assigned to the dynamic variables at the factory:

Dynamic variables	Measured values (HART device variables)
Primary dynamic variable (PV)	Volume flow
Secondary dynamic variable (SV)	Totalizer 1
Tertiary dynamic variable (TV)	Totalizer 2
Quaternary dynamic variable (QV)	Totalizer 3

The assignment of the measured variables to the dynamic variables can be modified and assigned as desired via local operation and the operating tool using the following parameters:

- Expert → Communication → HART output → Output → Assign PV
- Expert → Communication → HART output → Output → Assign SV
- Expert → Communication → HART output → Output → Assign TV
- Expert → Communication → HART output → Output → Assign QV

The following measured variables can be assigned to the dynamic variables:

Measured variables for PV (primary dynamic variable)
- Off
- Volume flow
- Mass flow
- Corrected volume flow
- Flow velocity
- Conductivity [1)]
- Electronic temperature

Measured variables for SV, TV, QV (secondary, tertiary and quaternary dynamic variable)
- Volume flow
- Mass flow
- Corrected volume flow
- Flow velocity
- Conductivity [2)]
- Electronic temperature
- Totalizer 1
- Totalizer 2
- Totalizer 3

The range of options increases if the measuring device has one or more application packages.

Device variables
The device variables are permanently assigned. A maximum of 8 device variables can be transmitted:
- 0 = volume flow
- 1 = mass flow
- 2 = corrected volume flow
- 3 = flow velocity
- 4 = conductivity
- 7 = electronic temperature
- 8 = totalizer 1
- 9 = totalizer 2
- 10 = totalizer 3

1) Visibility depends on order options or device settings
2) Visibility depends on order options or device settings

9.3 Other settings

Burst mode functionality in accordance with HART 7 Specification:

Navigation
"Expert" menu → Communication → HART output → Burst configuration → Burst configuration 1 to n

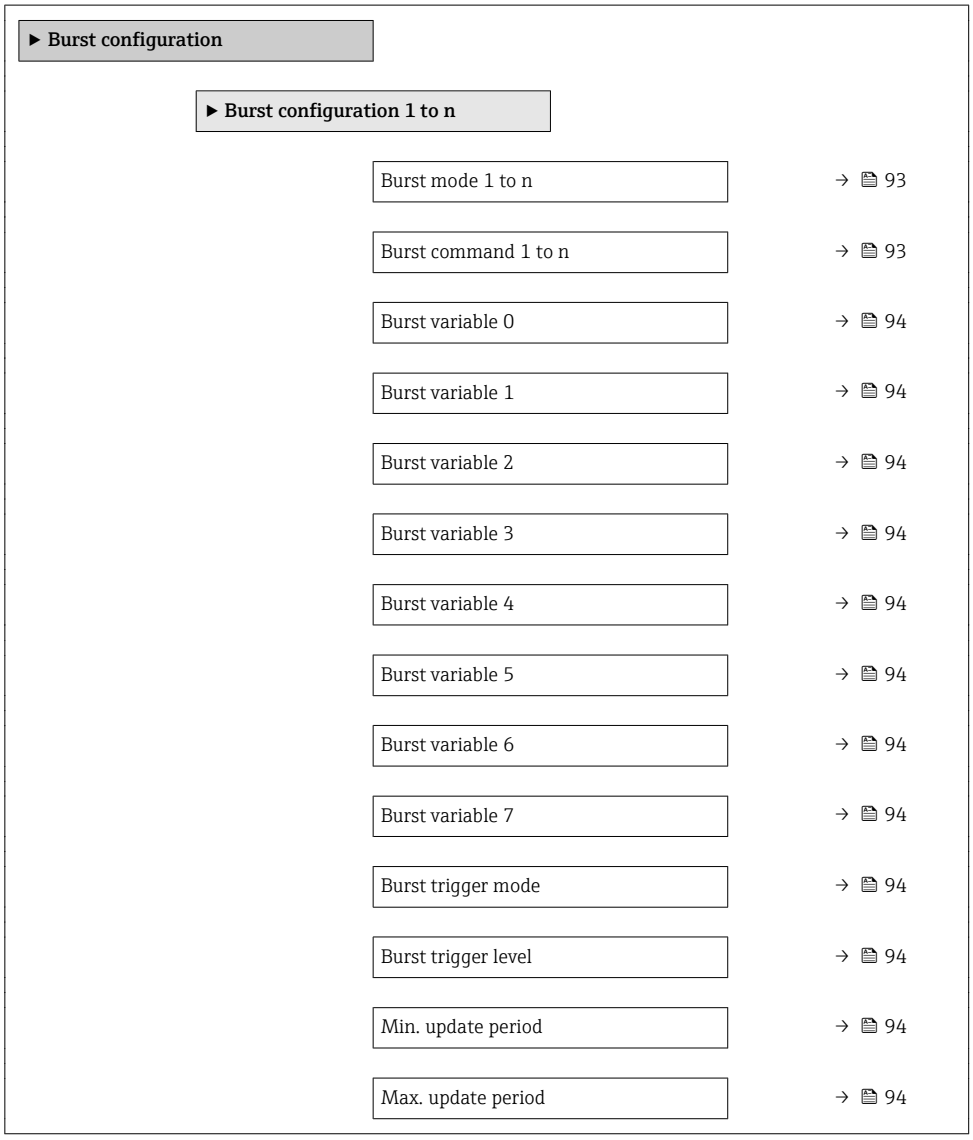

Parameter overview with brief description

Parameter	Description	Selection / User entry	Factory setting
Burst mode 1 to n	Activate the HART burst mode for burst message X.	▪ Off ▪ On	Off
Burst command 1 to n	Select the HART command that is sent to the HART master.	▪ Command 1 ▪ Command 2 ▪ Command 3 ▪ Command 9 ▪ Command 33 ▪ Command 48	Command 2

Parameter	Description	Selection / User entry	Factory setting
Burst variable 0	For HART command 9 and 33: select the HART device variable or the process variable.	▪ Volume flow ▪ Mass flow ▪ Corrected volume flow ▪ Flow velocity ▪ Conductivity * ▪ Electronic temperature ▪ Totalizer 1 ▪ Totalizer 2 ▪ Totalizer 3 ▪ Density ▪ HART input ▪ Percent of range ▪ Measured current ▪ Primary variable (PV) ▪ Secondary variable (SV) ▪ Tertiary variable (TV) ▪ Quaternary variable (QV) ▪ Not used	Volume flow
Burst variable 1	For HART command 9 and 33: select the HART device variable or the process variable.	See the **Burst variable 0** parameter.	Not used
Burst variable 2	For HART command 9 and 33: select the HART device variable or the process variable.	See the **Burst variable 0** parameter.	Not used
Burst variable 3	For HART command 9 and 33: select the HART device variable or the process variable.	See the **Burst variable 0** parameter.	Not used
Burst variable 4	For HART command 9: select the HART device variable or the process variable.	See the **Burst variable 0** parameter.	Not used
Burst variable 5	For HART command 9: select the HART device variable or the process variable.	See the **Burst variable 0** parameter.	Not used
Burst variable 6	For HART command 9: select the HART device variable or the process variable.	See the **Burst variable 0** parameter.	Not used
Burst variable 7	For HART command 9: select the HART device variable or the process variable.	See the **Burst variable 0** parameter.	Not used
Burst trigger mode	Select the event that triggers burst message X.	▪ Continuous ▪ Window * ▪ Rising * ▪ Falling * ▪ On change	Continuous
Burst trigger level	Enter the burst trigger value. Together with the option selected in the **Burst trigger mode** parameter the burst trigger value determines the time of burst message X.	Signed floating-point number	–
Min. update period	Enter the minimum time span between two burst commands of burst message X.	Positive integer	1 000 ms
Max. update period	Enter the maximum time span between two burst commands of burst message X.	Positive integer	2 000 ms

* Visibility depends on order options or device settings

10 Commissioning

10.1 Function check

Before commissioning the measuring device:

▶ Make sure that the post-installation and post-connection checks have been performed.

- "Post-installation check" checklist→ 37
- "Post-connection check" checklist → 63

10.2 Switching on the measuring device

▶ After a successful function check, switch on the measuring device.
  ↳ After a successful startup, the local display switches automatically from the startup display to the operational display.

If nothing appears on the local display or a diagnostic message is displayed, refer to the section on "Diagnostics and troubleshooting" → 148.

10.3 Setting the operating language

Factory setting: English or ordered local language

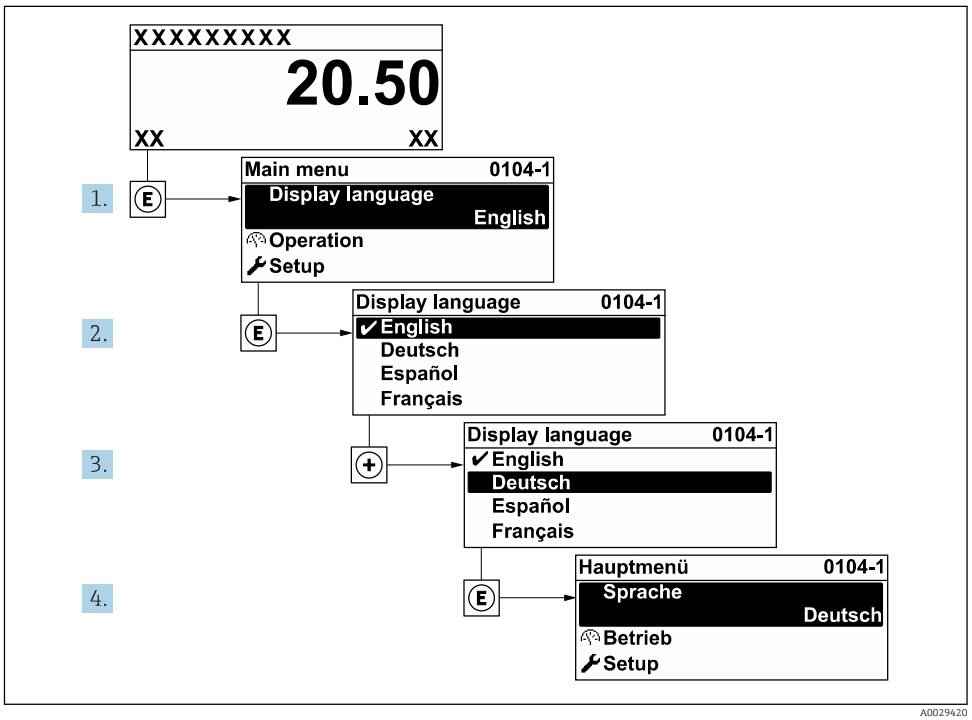

40 *Taking the example of the local display*

10.4 Configuring the measuring device

- The **Setup** menu with its guided wizards contains all the parameters needed for standard operation.
- Navigation to the **Setup** menu

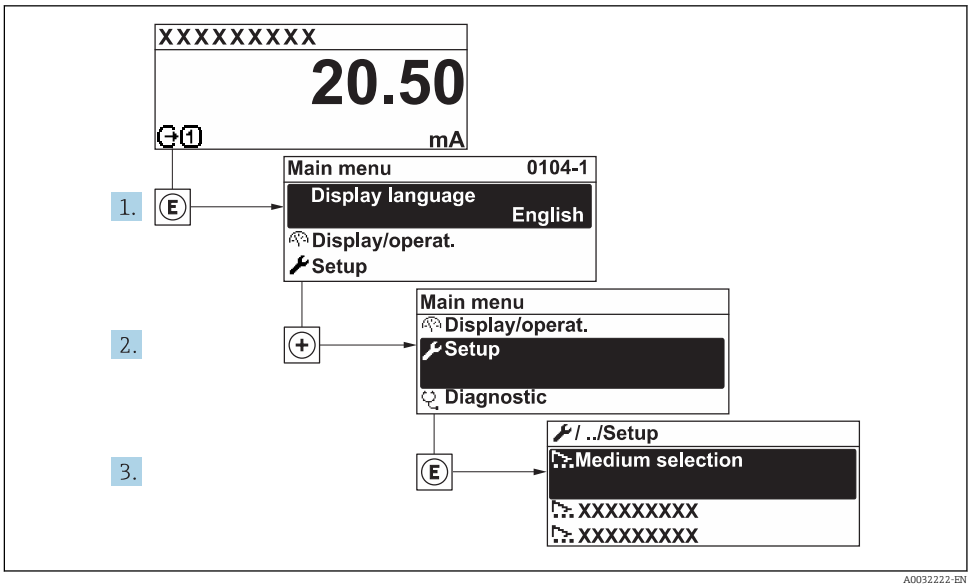

41 *Taking the example of the local display*

The number of submenus and parameters can vary depending on the device version. Certain submenus and parameters in these submenus are not described in the Operation Instructions. Instead a description is provided in the Special Documentation for the device (→ "Supplementary documentation" section).

Setup

Device tag	→ 97
▶ System units	→ 97
▶ I/O configuration	→ 99
▶ Current input 1 to n	→ 101
▶ Status input 1 to n	→ 100
▶ Current output 1 to n	→ 102
▶ Pulse/frequency/switch output 1 to n	→ 105
▶ Relay output 1 to n	→ 116
▶ Double pulse output	→ 118
▶ Display	→ 111
▶ Low flow cut off	→ 113

▶ Empty pipe detection	→ 114
▶ Advanced setup	→ 120

10.4.1 Defining the tag name

To enable fast identification of the measuring point within the system, you can enter a unique designation using the **Device tag** parameter and thus change the factory setting.

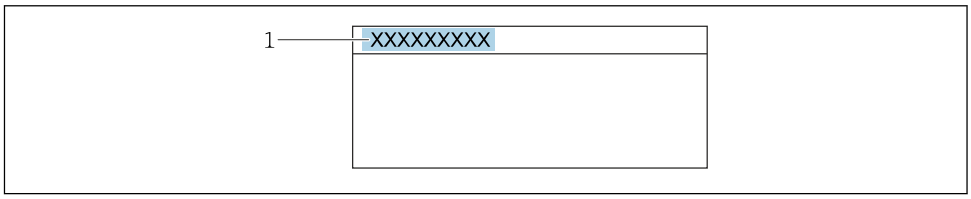

42 *Header of the operational display with tag name*

1 Tag name

Enter the tag name in the "FieldCare" operating tool → 89

Navigation
"Setup" menu → Device tag

Parameter overview with brief description

Parameter	Description	User entry	Factory setting
Device tag	Enter the name for the measuring point.	Max. 32 characters, such as letters, numbers or special characters (e.g. @, %, /).	Promag

10.4.2 Setting the system units

In the **System units** submenu the units of all the measured values can be set.

The number of submenus and parameters can vary depending on the device version. Certain submenus and parameters in these submenus are not described in the Operation Instructions. Instead a description is provided in the Special Documentation for the device (→ "Supplementary documentation" section).

Navigation
"Setup" menu → System units

▶ System units	
Volume flow unit	→ 98
Volume unit	→ 98
Conductivity unit	→ 98
Temperature unit	→ 98

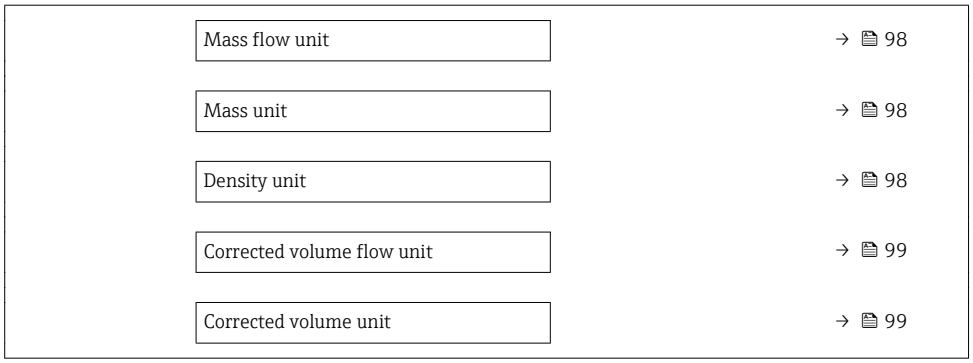

Parameter overview with brief description

Parameter	Prerequisite	Description	Selection	Factory setting
Volume flow unit	–	Select volume flow unit. *Result* The selected unit applies for: ▪ Output ▪ Low flow cut off ▪ Simulation process variable	Unit choose list	Country-specific: ▪ l/h ▪ gal/min (us)
Volume unit	–	Select volume unit.	Unit choose list	Country-specific: ▪ m^3 ▪ gal (us)
Conductivity unit	The **On** option is selected in the **Conductivity measurement** parameter parameter.	Select conductivity unit. *Effect* The selected unit applies for: ▪ Current output ▪ Frequency output ▪ Switch output ▪ Simulation process variable	Unit choose list	µS/cm
Temperature unit	–	Select temperature unit. *Result* The selected unit applies for: ▪ **Temperature** parameter ▪ **Maximum value** parameter ▪ **Minimum value** parameter ▪ **External temperature** parameter ▪ **Maximum value** parameter ▪ **Minimum value** parameter	Unit choose list	Country-specific: ▪ °C ▪ °F
Mass flow unit	–	Select mass flow unit. *Result* The selected unit applies for: ▪ Output ▪ Low flow cut off ▪ Simulation process variable	Unit choose list	Country-specific: ▪ kg/h ▪ lb/min
Mass unit	–	Select mass unit.	Unit choose list	Country-specific: ▪ kg ▪ lb
Density unit	–	Select density unit. *Result* The selected unit applies for: ▪ Output ▪ Simulation process variable	Unit choose list	Country-specific: ▪ kg/l ▪ lb/ft^3

Parameter	Prerequisite	Description	Selection	Factory setting
Corrected volume flow unit	–	Select corrected volume flow unit. *Result* The selected unit applies for: **Corrected volume flow** parameter (→ 139)	Unit choose list	Country-specific: ▪ Nl/h ▪ Sft³/h
Corrected volume unit	–	Select corrected volume unit.	Unit choose list	Country-specific: ▪ Nm³ ▪ Sft³

10.4.3 Displaying the I/O configuration

The **I/O configuration** submenu guides the user systematically through all the parameters in which the configuration of the I/O modules is displayed.

Navigation
"Setup" menu → I/O configuration

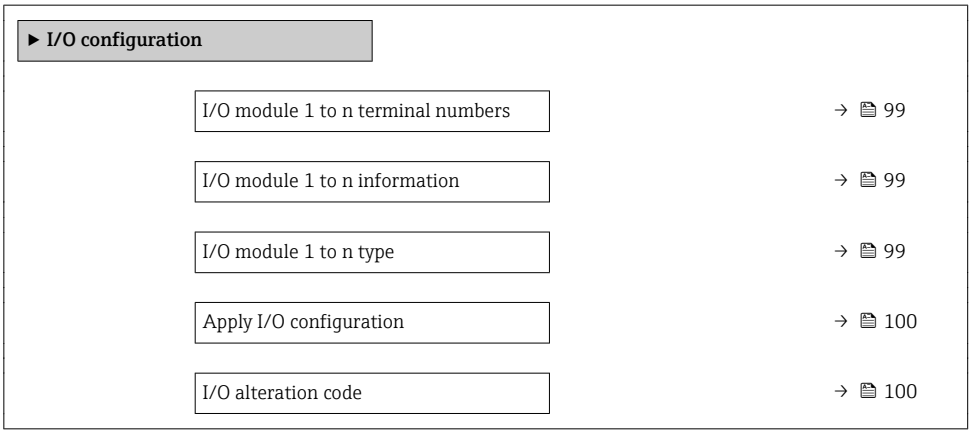

Parameter overview with brief description

Parameter	Description	User interface / Selection / User entry	Factory setting
I/O module 1 to n terminal numbers	Shows the terminal numbers used by the I/O module.	▪ Not used ▪ 26-27 (I/O 1) ▪ 24-25 (I/O 2) ▪ 22-23 (I/O 3) ▪ 20-21 (I/O 4) *	–
I/O module 1 to n information	Shows information of the plugged I/O module.	▪ Not plugged ▪ Invalid ▪ Not configurable ▪ Configurable ▪ HART	–
I/O module 1 to n type	Shows the I/O module type.	▪ Off ▪ Current output * ▪ Current input * ▪ Status input * ▪ Pulse/frequency/switch output * ▪ Double pulse output * ▪ Relay output *	Off

Parameter	Description	User interface / Selection / User entry	Factory setting
Apply I/O configuration	Apply parameterization of the freely configurable I/O module.	▪ No ▪ Yes	No
I/O alteration code	Enter the code in order to change the I/O configuration.	Positive integer	0

* Visibility depends on order options or device settings

10.4.4 Configuring the status input

The **Status input** submenu guides the user systematically through all the parameters that have to be set for configuring the status input.

Navigation
"Setup" menu → Status input

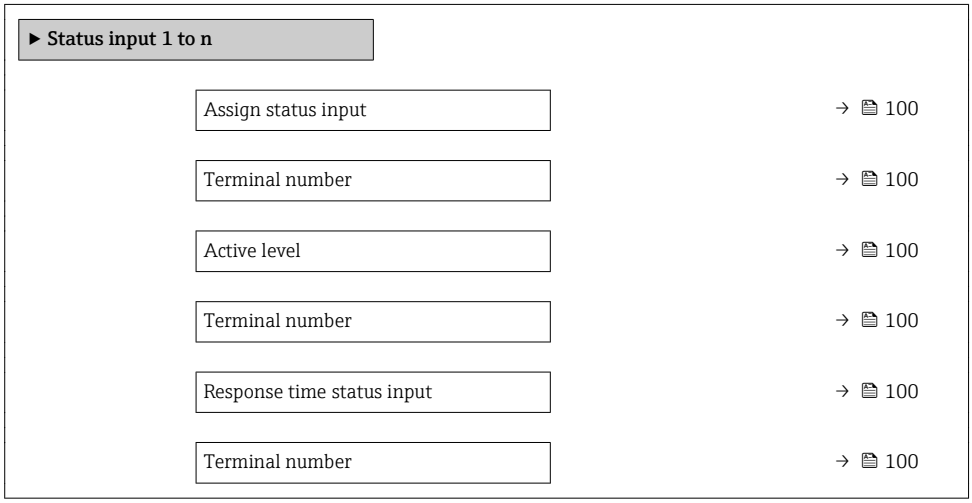

Parameter overview with brief description

Parameter	Description	User interface / Selection / User entry	Factory setting
Terminal number	Shows the terminal numbers used by the status input module.	▪ Not used ▪ 24-25 (I/O 2) ▪ 22-23 (I/O 3) ▪ 20-21 (I/O 4) *	–
Assign status input	Select function for the status input.	▪ Off ▪ Reset totalizer 1 ▪ Reset totalizer 2 ▪ Reset totalizer 3 ▪ Reset all totalizers ▪ Flow override	Off
Active level	Define input signal level at which the assigned function is triggered.	▪ High ▪ Low	High
Response time status input	Define the minimum amount of time the input signal level must be present before the selected function is triggered.	5 to 200 ms	50 ms

* Visibility depends on order options or device settings

10.4.5 Configuring the current input

The **"Current input" wizard** guides the user systematically through all the parameters that have to be set for configuring the current input.

Navigation
"Setup" menu → Current input

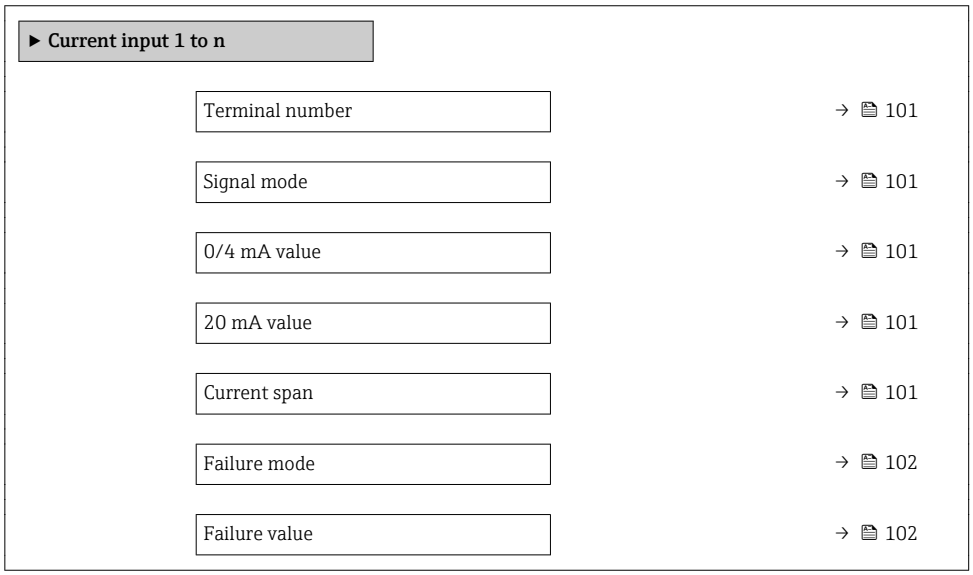

Parameter overview with brief description

Parameter	Prerequisite	Description	User interface / Selection / User entry	Factory setting
Terminal number	–	Shows the terminal numbers used by the current input module.	▪ Not used ▪ 24-25 (I/O 2) ▪ 22-23 (I/O 3) ▪ 20-21 (I/O 4) *	–
Signal mode	The measuring device is **not** approved for use in the hazardous area with type of protection Ex-i.	Select the signal mode for the current input.	▪ Passive ▪ Active *	Active
0/4 mA value	–	Enter 4 mA value.	Signed floating-point number	0
20 mA value	–	Enter 20 mA value.	Signed floating-point number	Depends on country and nominal diameter
Current span	–	Select current range for process value output and upper/lower level for alarm signal.	▪ 4...20 mA (4... 20.5 mA) ▪ 4...20 mA NAMUR (3.8...20.5 mA) ▪ 4...20 mA US (3.9...20.8 mA) ▪ 0...20 mA (0... 20.5 mA)	Country-specific: ▪ 4...20 mA NAMUR (3.8...20.5 mA) ▪ 4...20 mA US (3.9...20.8 mA)

Parameter	Prerequisite	Description	User interface / Selection / User entry	Factory setting
Failure mode	–	Define input behavior in alarm condition.	▪ Alarm ▪ Last valid value ▪ Defined value	Alarm
Failure value	In the **Failure mode** parameter, the **Defined value** option is selected.	Enter value to be used by the device if input value from external device is missing.	Signed floating-point number	0

* Visibility depends on order options or device settings

10.4.6 Configuring the current output

The **Current output** wizard guides you systematically through all the parameters that have to be set for configuring the current output.

Navigation
"Setup" menu → Current output



Parameter overview with brief description

Parameter	Prerequisite	Description	User interface / Selection / User entry	Factory setting
Terminal number	–	Shows the terminal numbers used by the current output module.	▪ Not used ▪ 26-27 (I/O 1) ▪ 24-25 (I/O 2) ▪ 22-23 (I/O 3) ▪ 20-21 (I/O 4) *	–
Signal mode	–	Select the signal mode for the current output.	▪ Active * ▪ Passive *	Active
Assign current output 1 to n	–	Select process variable for current output.	▪ Off * ▪ Volume flow ▪ Mass flow ▪ Corrected volume flow ▪ Flow velocity ▪ Conductivity * ▪ Electronic temperature ▪ Reference electrode potential against PE * ▪ Coil current shot time * ▪ Noise * ▪ Coating measured value * ▪ Test point 1 ▪ Test point 2 ▪ Test point 3	Volume flow
Current span	–	Select current range for process value output and upper/lower level for alarm signal.	▪ 4...20 mA NAMUR (3.8...20.5 mA) ▪ 4...20 mA US (3.9...20.8 mA) ▪ 4...20 mA (4... 20.5 mA) ▪ 0...20 mA (0... 20.5 mA) ▪ Fixed current	Country-specific: ▪ 4...20 mA NAMUR (3.8...20.5 mA) ▪ 4...20 mA US (3.9...20.8 mA)
0/4 mA value	In the **Current span** parameter (→ 🖹 103), one of the following options is selected: ▪ 4...20 mA NAMUR (3.8...20.5 mA) ▪ 4...20 mA US (3.9...20.8 mA) ▪ 4...20 mA (4... 20.5 mA) ▪ 0...20 mA (0... 20.5 mA)	Enter 4 mA value.	Signed floating-point number	Country-specific: ▪ 0 l/h ▪ 0 gal/min (us)
20 mA value	One of the following options is selected in the **Current span** parameter (→ 🖹 103): ▪ 4...20 mA NAMUR (3.8...20.5 mA) ▪ 4...20 mA US (3.9...20.8 mA) ▪ 4...20 mA (4... 20.5 mA) ▪ 0...20 mA (0... 20.5 mA)	Enter 20 mA value.	Signed floating-point number	Depends on country and nominal diameter
Fixed current	The **Fixed current** option is selected in the **Current span** parameter (→ 🖹 103).	Defines the fixed output current.	0 to 22.5 mA	22.5 mA

Parameter	Prerequisite	Description	User interface / Selection / User entry	Factory setting
Damping output 1 to n	A process variable is selected in the **Assign current output** parameter (→ 🖹 103) and one of the following options is selected in the **Current span** parameter (→ 🖹 103): ▪ 4...20 mA NAMUR (3.8...20.5 mA) ▪ 4...20 mA US (3.9...20.8 mA) ▪ 4...20 mA (4... 20.5 mA) ▪ 0...20 mA (0... 20.5 mA)	Set reaction time for output signal to fluctuations in the measured value.	0.0 to 999.9 s	1.0 s
Failure mode	A process variable is selected in the **Assign current output** parameter (→ 🖹 103) and one of the following options is selected in the **Current span** parameter (→ 🖹 103): ▪ 4...20 mA NAMUR (3.8...20.5 mA) ▪ 4...20 mA US (3.9...20.8 mA) ▪ 4...20 mA (4... 20.5 mA) ▪ 0...20 mA (0... 20.5 mA)	Define output behavior in alarm condition.	▪ Min. ▪ Max. ▪ Last valid value ▪ Actual value ▪ Defined value	Max.
Failure current	The **Defined value** option is selected in the **Failure mode** parameter.	Enter current output value in alarm condition.	0 to 22.5 mA	22.5 mA

* Visibility depends on order options or device settings

10.4.7 Configuring the pulse/frequency/switch output

The **Pulse/frequency/switch output** wizard guides you systematically through all the parameters that can be set for configuring the selected output type.

Navigation

"Setup" menu → Advanced setup → Pulse/frequency/switch output

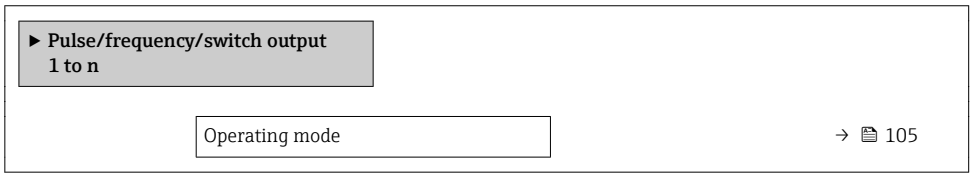

Parameter overview with brief description

Parameter	Description	Selection	Factory setting
Operating mode	Define the output as a pulse, frequency or switch output.	▪ Pulse ▪ Frequency ▪ Switch	Pulse

Configuring the pulse output

Navigation

"Setup" menu → Pulse/frequency/switch output

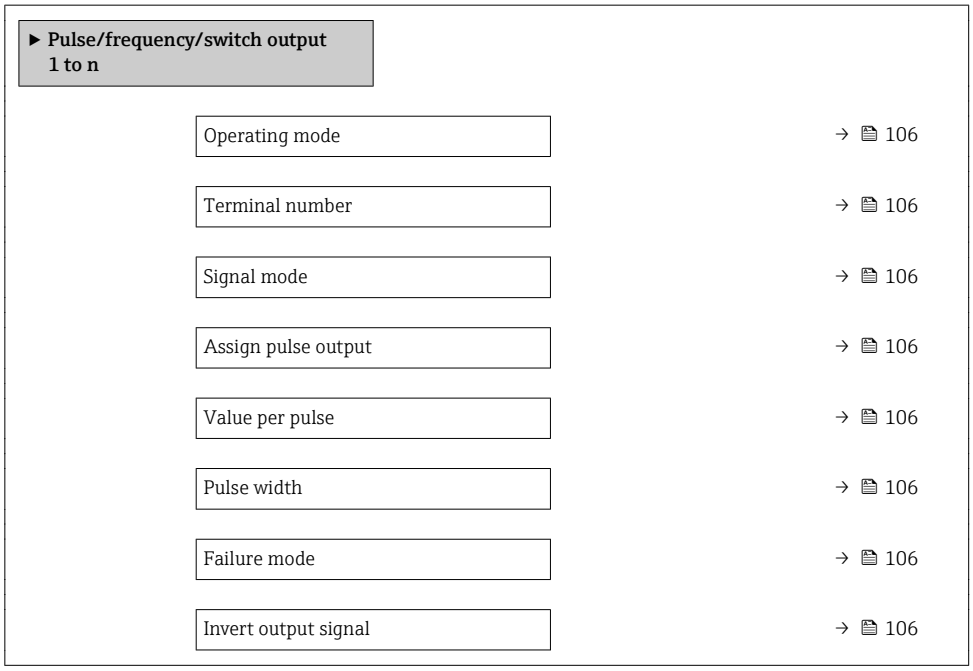

Parameter overview with brief description

Parameter	Prerequisite	Description	Selection / User interface / User entry	Factory setting
Operating mode	–	Define the output as a pulse, frequency or switch output.	▪ Pulse ▪ Frequency ▪ Switch	Pulse
Terminal number	–	Shows the terminal numbers used by the PFS output module.	▪ Not used ▪ 24-25 (I/O 2) ▪ 22-23 (I/O 3) ▪ 20-21 (I/O 4) *	–
Signal mode	–	Select the signal mode for the PFS output.	▪ Passive ▪ Active ▪ Passive NAMUR	Passive
Assign pulse output 1 to n	The **Pulse** option is selected in the **Operating mode** parameter parameter.	Select process variable for pulse output.	▪ Off ▪ Volume flow ▪ Mass flow ▪ Corrected volume flow	Off
Pulse scaling	The **Pulse** option is selected in the **Operating mode** parameter (→ 🖹 105) and a process variable is selected in the **Assign pulse output** parameter (→ 🖹 106).	Enter quantity for measured value at which a pulse is output.	Positive floating point number	Depends on country and nominal diameter
Pulse width	The **Pulse** option is selected in the **Operating mode** parameter (→ 🖹 105) and a process variable is selected in the **Assign pulse output** parameter (→ 🖹 106).	Define time width of the output pulse.	0.05 to 2 000 ms	100 ms
Failure mode	The **Pulse** option is selected in the **Operating mode** parameter (→ 🖹 105) and a process variable is selected in the **Assign pulse output** parameter (→ 🖹 106).	Define output behavior in alarm condition.	▪ Actual value ▪ No pulses	No pulses
Invert output signal	–	Invert the output signal.	▪ No ▪ Yes	No

* Visibility depends on order options or device settings

Configuring the frequency output

Navigation

"Setup" menu → Pulse/frequency/switch output

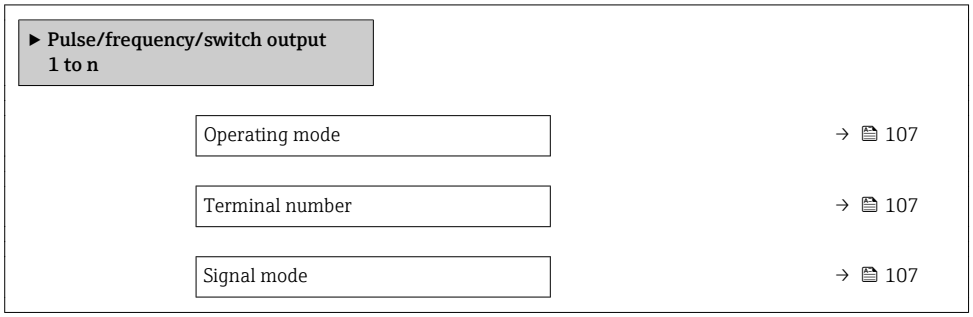

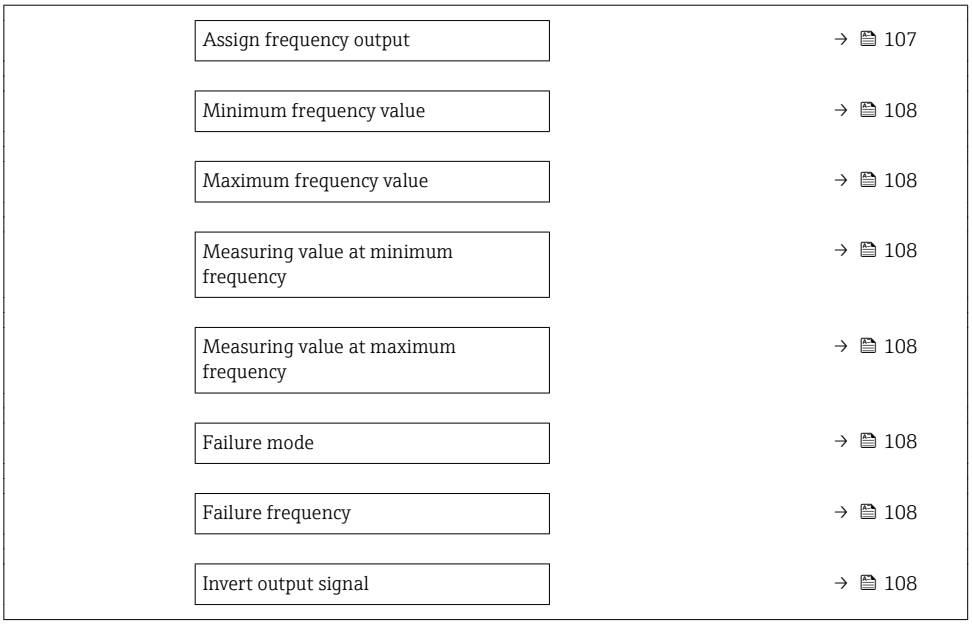

Parameter overview with brief description

Parameter	Prerequisite	Description	Selection / User interface / User entry	Factory setting
Operating mode	–	Define the output as a pulse, frequency or switch output.	▪ Pulse ▪ Frequency ▪ Switch	Pulse
Terminal number	–	Shows the terminal numbers used by the PFS output module.	▪ Not used ▪ 24-25 (I/O 2) ▪ 22-23 (I/O 3) ▪ 20-21 (I/O 4) *	–
Signal mode	–	Select the signal mode for the PFS output.	▪ Passive ▪ Active ▪ Passive NAMUR	Passive
Assign frequency output	The **Frequency** option is selected in the **Operating mode** parameter (→ 105).	Select process variable for frequency output.	▪ Off ▪ Volume flow ▪ Mass flow ▪ Corrected volume flow ▪ Flow velocity ▪ Conductivity * ▪ Electronic temperature ▪ Noise * ▪ Coil current shot time * ▪ Reference electrode potential against PE * ▪ Coating measured value * ▪ Test point 1 ▪ Test point 2 ▪ Test point 3	Off

Parameter	Prerequisite	Description	Selection / User interface / User entry	Factory setting
Minimum frequency value	The **Frequency** option is selected in the **Operating mode** parameter (→ 🖹 105) and a process variable is selected in the **Assign frequency output** parameter (→ 🖹 107).	Enter minimum frequency.	0.0 to 10 000.0 Hz	0.0 Hz
Maximum frequency value	The **Frequency** option is selected in the **Operating mode** parameter (→ 🖹 105) and a process variable is selected in the **Assign frequency output** parameter (→ 🖹 107).	Enter maximum frequency.	0.0 to 10 000.0 Hz	10 000.0 Hz
Measuring value at minimum frequency	The **Frequency** option is selected in the **Operating mode** parameter (→ 🖹 105) and a process variable is selected in the **Assign frequency output** parameter (→ 🖹 107).	Enter measured value for minmum frequency.	Signed floating-point number	Depends on country and nominal diameter
Measuring value at maximum frequency	The **Frequency** option is selected in the **Operating mode** parameter (→ 🖹 105) and a process variable is selected in the **Assign frequency output** parameter (→ 🖹 107).	Enter measured value for maximum frequency.	Signed floating-point number	Depends on country and nominal diameter
Failure mode	The **Frequency** option is selected in the **Operating mode** parameter (→ 🖹 105) and a process variable is selected in the **Assign frequency output** parameter (→ 🖹 107).	Define output behavior in alarm condition.	▪ Actual value ▪ Defined value ▪ 0 Hz	0 Hz
Failure frequency	The **Frequency** option is selected in the **Operating mode** parameter (→ 🖹 105) and a process variable is selected in the **Assign frequency output** parameter (→ 🖹 107).	Enter frequency output value in alarm condition.	0.0 to 12 500.0 Hz	0.0 Hz
Invert output signal	–	Invert the output signal.	▪ No ▪ Yes	No

* Visibility depends on order options or device settings

Configuring the switch output

Navigation
"Setup" menu → Pulse/frequency/switch output

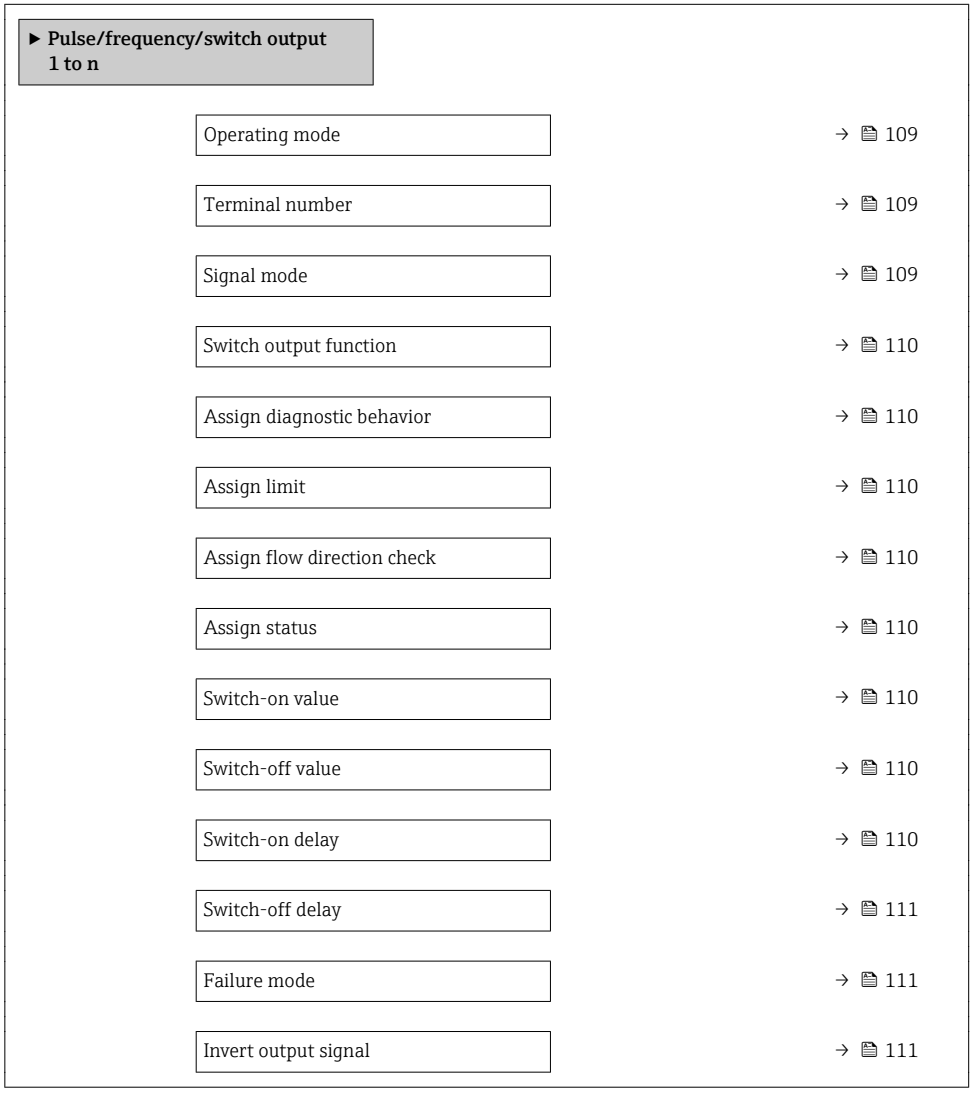

Parameter overview with brief description

Parameter	Prerequisite	Description	Selection / User interface / User entry	Factory setting
Operating mode	–	Define the output as a pulse, frequency or switch output.	▪ Pulse ▪ Frequency ▪ Switch	Pulse
Terminal number	–	Shows the terminal numbers used by the PFS output module.	▪ Not used ▪ 24-25 (I/O 2) ▪ 22-23 (I/O 3) ▪ 20-21 (I/O 4) *	–
Signal mode	–	Select the signal mode for the PFS output.	▪ Passive ▪ Active ▪ Passive NAMUR	Passive

Parameter	Prerequisite	Description	Selection / User interface / User entry	Factory setting
Switch output function	The **Switch** option is selected in the **Operating mode** parameter.	Select function for switch output.	▪ Off ▪ On ▪ Diagnostic behavior ▪ Limit ▪ Flow direction check ▪ Status	Off
Assign diagnostic behavior	▪ In the **Operating mode** parameter, the **Switch** option is selected. ▪ In the **Switch output function** parameter, the **Diagnostic behavior** option is selected.	Select diagnostic behavior for switch output.	▪ Alarm ▪ Alarm or warning ▪ Warning	Alarm
Assign limit	▪ The **Switch** option is selected in the **Operating mode** parameter. ▪ The **Limit** option is selected in the **Switch output function** parameter.	Select process variable for limit function.	▪ Off ▪ Volume flow ▪ Mass flow ▪ Corrected volume flow ▪ Flow velocity ▪ Conductivity* ▪ Totalizer 1 ▪ Totalizer 2 ▪ Totalizer 3 ▪ Electronic temperature	Volume flow
Assign flow direction check	▪ The **Switch** option is selected in the **Operating mode** parameter. ▪ The **Flow direction check** option is selected in the **Switch output function** parameter.	Select process variable for flow direction monitoring.	▪ Off ▪ Volume flow ▪ Mass flow ▪ Corrected volume flow	Volume flow
Assign status	▪ The **Switch** option is selected in the **Operating mode** parameter. ▪ The **Status** option is selected in the **Switch output function** parameter.	Select device status for switch output.	▪ Empty pipe detection ▪ Low flow cut off	Empty pipe detection
Switch-on value	▪ The **Switch** option is selected in the **Operating mode** parameter. ▪ The **Limit** option is selected in the **Switch output function** parameter.	Enter measured value for the switch-on point.	Signed floating-point number	Country-specific: ▪ 0 l/h ▪ 0 gal/min (us)
Switch-off value	▪ The **Switch** option is selected in the **Operating mode** parameter. ▪ The **Limit** option is selected in the **Switch output function** parameter.	Enter measured value for the switch-off point.	Signed floating-point number	Country-specific: ▪ 0 l/h ▪ 0 gal/min (us)
Switch-on delay	▪ The **Switch** option is selected in the **Operating mode** parameter. ▪ The **Limit** option is selected in the **Switch output function** parameter.	Define delay for the switch-on of status output.	0.0 to 100.0 s	0.0 s

Parameter	Prerequisite	Description	Selection / User interface / User entry	Factory setting
Switch-off delay	▪ The **Switch** option is selected in the **Operating mode** parameter. ▪ The **Limit** option is selected in the **Switch output function** parameter.	Define delay for the switch-off of status output.	0.0 to 100.0 s	0.0 s
Failure mode	–	Define output behavior in alarm condition.	▪ Actual status ▪ Open ▪ Closed	Open
Invert output signal	–	Invert the output signal.	▪ No ▪ Yes	No

* Visibility depends on order options or device settings

10.4.8 Configuring the local display

The **Display** wizard guides you systematically through all the parameters that can configured for configuring the local display.

Navigation
"Setup" menu → Display

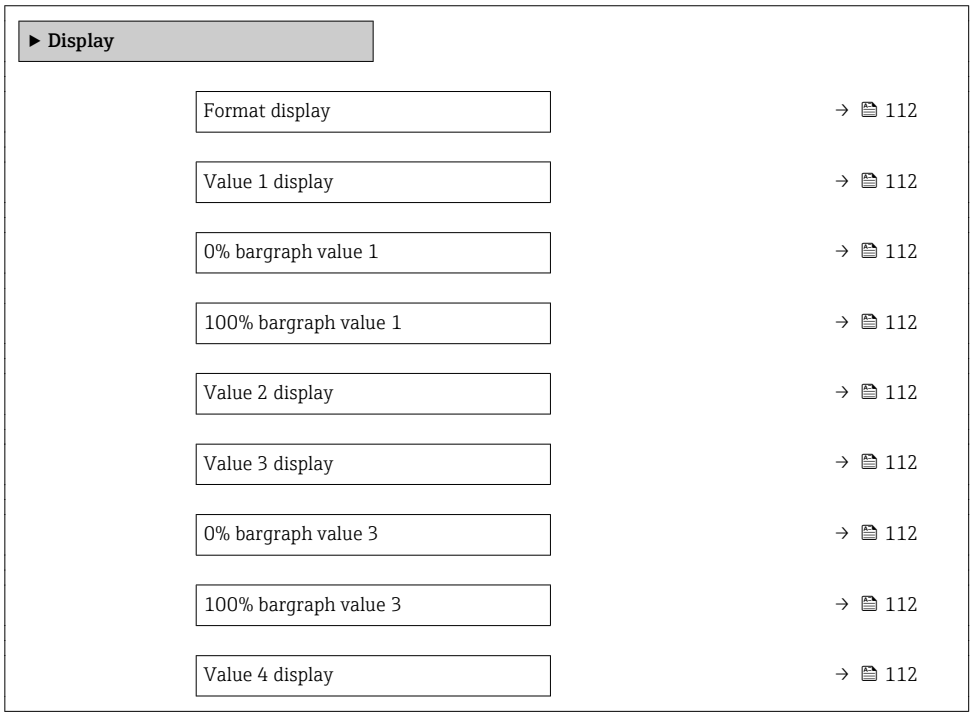

Parameter overview with brief description

Parameter	Prerequisite	Description	Selection / User entry	Factory setting
Format display	A local display is provided.	Select how measured values are shown on the display.	▪ 1 value, max. size ▪ 1 bargraph + 1 value ▪ 2 values ▪ 1 value large + 2 values ▪ 4 values	1 value, max. size
Value 1 display	A local display is provided.	Select the measured value that is shown on the local display.	▪ Volume flow ▪ Mass flow ▪ Corrected volume flow ▪ Flow velocity ▪ Totalizer 1 ▪ Totalizer 2 ▪ Totalizer 3 ▪ Current output 1 * ▪ Current output 2 * ▪ Current output 3 * ▪ Current output 4 * ▪ Electronic temperature ▪ Noise * ▪ Coil current shot time * ▪ Reference electrode potential against PE * ▪ Coating measured value * ▪ Test point 1 ▪ Test point 2 ▪ Test point 3	Volume flow
0% bargraph value 1	A local display is provided.	Enter 0% value for bar graph display.	Signed floating-point number	Country-specific: ▪ 0 l/h ▪ 0 gal/min (us)
100% bargraph value 1	A local display is provided.	Enter 100% value for bar graph display.	Signed floating-point number	Depends on country and nominal diameter
Value 2 display	A local display is provided.	Select the measured value that is shown on the local display.	For the picklist, see the **Value 2 display** parameter (→ 112)	None
Value 3 display	A local display is provided.	Select the measured value that is shown on the local display.	For the picklist, see the **Value 2 display** parameter (→ 112)	None
0% bargraph value 3	A selection was made in the **Value 3 display** parameter.	Enter 0% value for bar graph display.	Signed floating-point number	Country-specific: ▪ 0 l/h ▪ 0 gal/min (us)
100% bargraph value 3	A selection was made in the **Value 3 display** parameter.	Enter 100% value for bar graph display.	Signed floating-point number	0
Value 4 display	A local display is provided.	Select the measured value that is shown on the local display.	For the picklist, see the **Value 2 display** parameter (→ 112)	None

* Visibility depends on order options or device settings

10.4.9 Configuring the low flow cut off

The **Low flow cut off** wizard systematically guides the user through all the parameters that must be set to configure low flow cut off.

Navigation
"Setup" menu → Low flow cut off

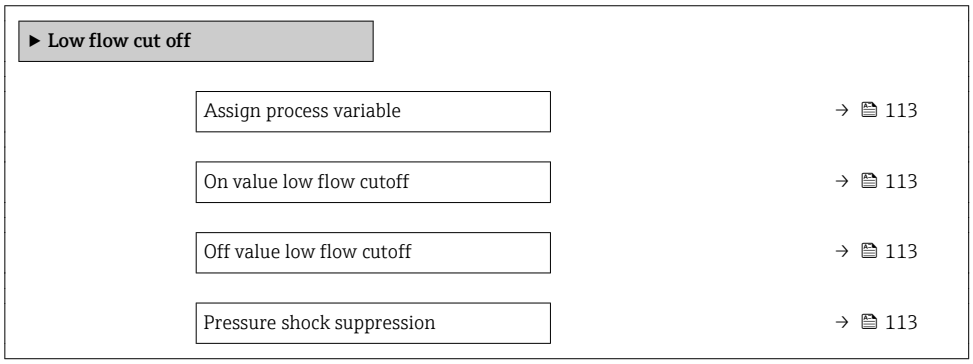

Parameter overview with brief description

Parameter	Prerequisite	Description	Selection / User entry	Factory setting
Assign process variable	–	Select process variable for low flow cut off.	▪ Off ▪ Volume flow ▪ Mass flow ▪ Corrected volume flow	Volume flow
On value low flow cutoff	A process variable is selected in the **Assign process variable** parameter (→ 113).	Enter on value for low flow cut off.	Positive floating-point number	Depends on country and nominal diameter
Off value low flow cutoff	A process variable is selected in the **Assign process variable** parameter (→ 113).	Enter off value for low flow cut off.	0 to 100.0 %	50 %
Pressure shock suppression	A process variable is selected in the **Assign process variable** parameter (→ 113).	Enter time frame for signal suppression (= active pressure shock suppression).	0 to 100 s	0 s

10.4.10 Configuring empty pipe detection

The **Empty pipe detection** submenu contains parameters that must be configured for the configuration of empty pipe detection.

Navigation
"Setup" menu → Empty pipe detection

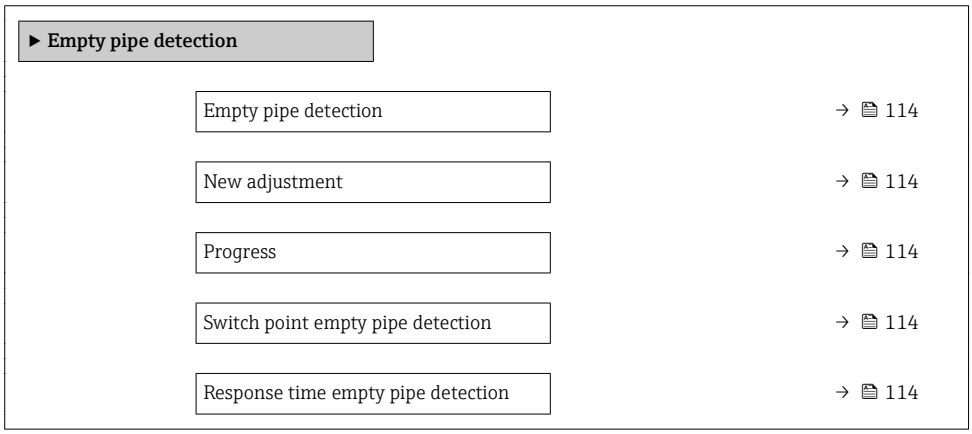

Parameter overview with brief description

Parameter	Prerequisite	Description	Selection / User interface / User entry	Factory setting
Empty pipe detection	–	Switch empty pipe detection on and off.	▪ Off ▪ On	Off
New adjustment	The **On** option is selected in the **Empty pipe detection** parameter.	Select type of adjustment.	▪ Cancel ▪ Empty pipe adjust ▪ Full pipe adjust	Cancel
Progress	The **On** option is selected in the **Empty pipe detection** parameter.	Shows the progress.	▪ Ok ▪ Busy ▪ Not ok	–
Switch point empty pipe detection	The **On** option is selected in the **Empty pipe detection** parameter.	Enter hysteresis in %, below this value the measuring tube will detected as empty.	0 to 100 %	10 %
Response time empty pipe detection	A process variable is selected in the **Assign process variable** parameter (→ 114).	Enter the time before diagnostic message S862 "Pipe empty" is displayed for empty pipe detection.	0 to 100 s	1 s

10.4.11 Configuring the HART input

Navigation
"Setup" menu → HART input

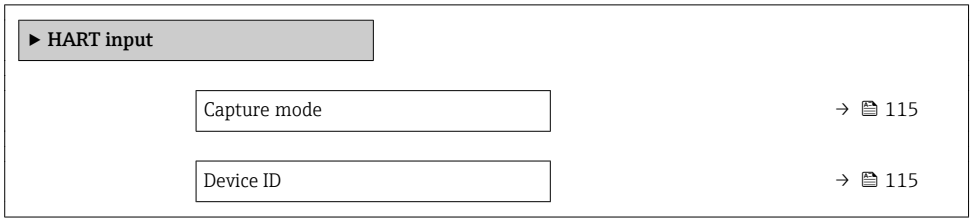

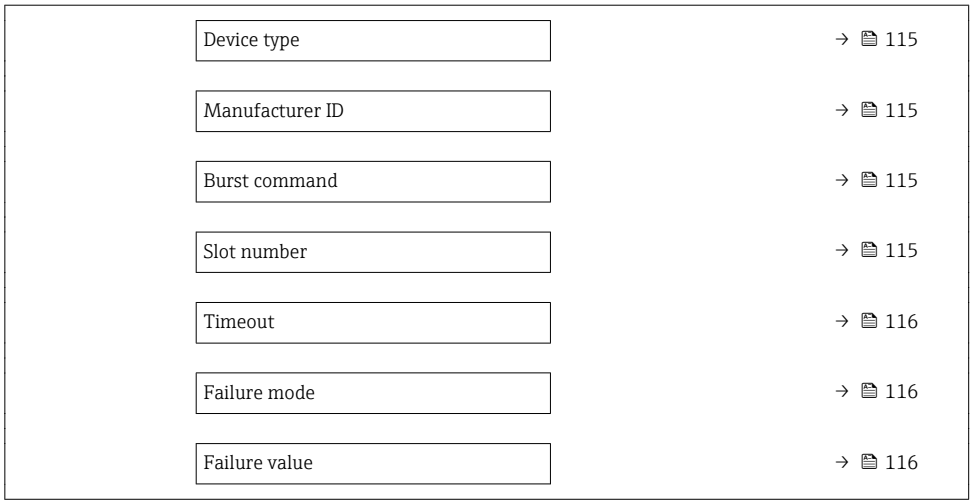

"Configuration" submenu

Navigation
"Expert" menu → Communication → HART input → Configuration

Parameter overview with brief description

Parameter	Prerequisite	Description	Selection / User entry	Factory setting
Capture mode	–	Select capture mode via burst or master communication.	▪ Off ▪ Burst network ▪ Master network	Off
Device ID	The **Master network** option is selected in the **Capture mode** parameter.	Enter device ID of external device.	6-digit value: ▪ Via local operation: enter as hexadecimal or decimal number ▪ Via operating tool: enter as decimal number	0
Device type	In the **Capture mode** parameter, the **Master network** option is selected.	Enter device type of external device.	2-digit hexadecimal number	0x00
Manufacturer ID	The **Master network** option is selected in the **Capture mode** parameter.	Enter manufacture ID of external device.	2-digit value: ▪ Via local operation: enter as hexadecimal or decimal number ▪ Via operating tool: enter as decimal number	0
Burst command	The **Burst network** option or the **Master network** option are selected in the **Capture mode** parameter.	Select command to read in external process variable.	▪ Command 1 ▪ Command 3 ▪ Command 9 ▪ Command 33	Command 1
Slot number	The **Burst network** option or the **Master network** option is selected in the **Capture mode** parameter.	Define position of external process variable in burst command.	1 to 8	1

Parameter	Prerequisite	Description	Selection / User entry	Factory setting
Timeout	The **Burst network** option or the **Master network** option is selected in the **Capture mode** parameter.	Enter deadline for process variable of external device. If the waiting time is exceeded, the **⊗F410 Data transfer** diagnostic message is displayed.	1 to 120 s	5 s
Failure mode	In the **Capture mode** parameter, the **Burst network** option or **Master network** option is selected.	Define behavior if external process variable is missed.	▪ Alarm ▪ Last valid value ▪ Defined value	Alarm
Failure value	The following conditions are met: ▪ In the **Capture mode** parameter, the **Burst network** option or **Master network** option is selected. ▪ In the **Failure mode** parameter, the **Defined value** option is selected.	Enter value to be used by the device if input value from external device is missing.	Signed floating-point number	0

"Input" submenu

Navigation
"Expert" menu → Communication → HART input → Input

Parameter overview with brief description

Parameter	Description	User interface
Value	Shows the value of the device variable recorded by the HART input.	Signed floating-point number
Status	Shows the status of the device variable recorded by the HART input.	▪ Manual/Fixed ▪ Good ▪ Poor accuracy ▪ Bad

10.4.12 Configuring the relay output

The **Relay output** wizard guides the user systematically through all the parameters that have to be set for configuring the relay output.

Navigation
"Setup" menu → Relay output 1 to n

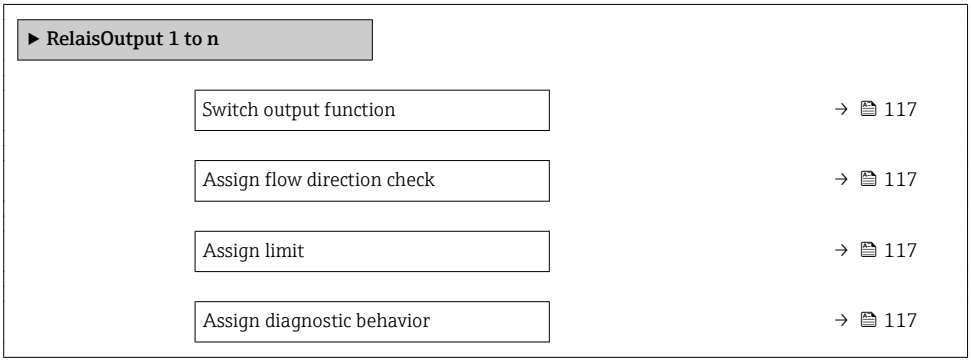

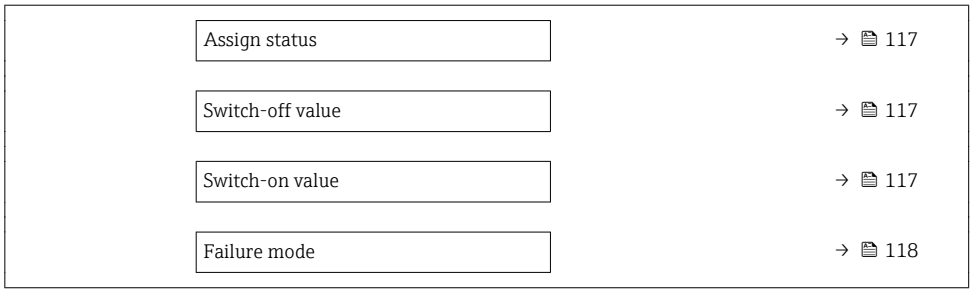

Parameter overview with brief description

Parameter	Prerequisite	Description	Selection / User interface / User entry	Factory setting
Relay output function	–	Select the function for the relay output.	▪ Closed ▪ Open ▪ Diagnostic behavior ▪ Limit ▪ Flow direction check ▪ Digital Output	Closed
Terminal number	–	Shows the terminal numbers used by the relay output module.	▪ Not used ▪ 24-25 (I/O 2) ▪ 22-23 (I/O 3) ▪ 20-21 (I/O 4)	–
Assign flow direction check	In the **Relay output function** parameter, the **Flow direction check** option is selected.	Select process variable for flow direction monitoring.	▪ Off ▪ Volume flow ▪ Mass flow ▪ Corrected volume flow	Volume flow
Assign limit	The **Limit** option is selected in the **Relay output function** parameter.	Select process variable for limit function.	▪ Off ▪ Volume flow ▪ Mass flow ▪ Corrected volume flow ▪ Flow velocity ▪ Conductivity * ▪ Totalizer 1 ▪ Totalizer 2 ▪ Totalizer 3 ▪ Electronic temperature	Volume flow
Assign diagnostic behavior	In the **Relay output function** parameter, the **Diagnostic behavior** option is selected.	Select diagnostic behavior for switch output.	▪ Alarm ▪ Alarm or warning ▪ Warning	Alarm
Assign status	In the **Relay output function** parameter, the **Digital Output** option is selected.	Select device status for switch output.	▪ Partially filled pipe detection ▪ Low flow cut off	Partially filled pipe detection
Switch-off value	In the **Relay output function** parameter, the **Limit** option is selected.	Enter measured value for the switch-off point.	Signed floating-point number	Country-specific: ▪ 0 l/h ▪ 0 gal(us)/min
Switch-off delay	In the **Relay output function** parameter, the **Limit** option is selected.	Define delay for the switch-off of status output.	0.0 to 100.0 s	0.0 s
Switch-on value	The **Limit** option is selected in the **Relay output function** parameter.	Enter measured value for the switch-on point.	Signed floating-point number	Country-specific: ▪ 0 l/h ▪ 0 gal(us)/min

Parameter	Prerequisite	Description	Selection / User interface / User entry	Factory setting
Switch-on delay	In the **Relay output function** parameter, the **Limit** option is selected.	Define delay for the switch-on of status output.	0.0 to 100.0 s	0.0 s
Failure mode	–	Define output behavior in alarm condition.	▪ Actual status ▪ Open ▪ Closed	Open

* Visibility depends on order options or device settings

10.4.13 Configuring the double pulse output

The **Double pulse output** submenu guides the user systematically through all the parameters that have to be set for configuring the double pulse output.

Navigation

"Setup" menu → Double pulse output

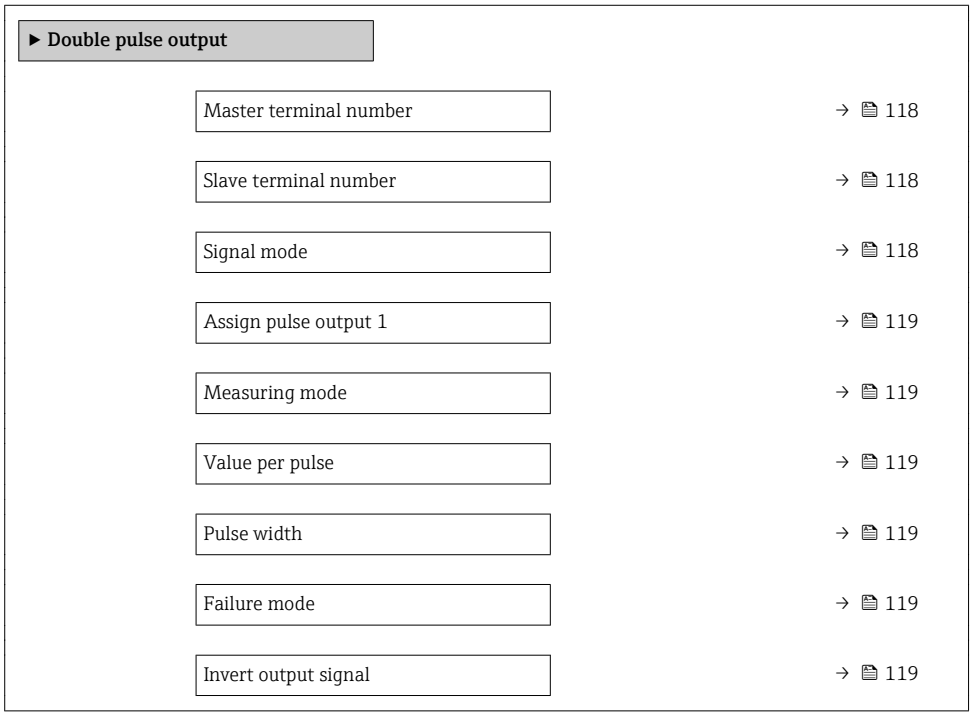

Parameter overview with brief description

Parameter	Description	Selection / User interface / User entry	Factory setting
Signal mode	Select the signal mode for the double pulse output.	▪ Passive ▪ Active ▪ Passive NAMUR	Passive
Master terminal number	Shows the terminal numbers used by the master of the double pulse output module.	▪ Not used ▪ 24-25 (I/O 2) ▪ 22-23 (I/O 3)	–
Slave terminal number	Shows the terminal numbers used by the slave of the double pulse output module.	▪ Not used ▪ 24-25 (I/O 2) ▪ 22-23 (I/O 3)	–

Parameter	Description	Selection / User interface / User entry	Factory setting
Assign pulse output 1	Select process variable for pulse output.	▪ Off ▪ Volume flow ▪ Mass flow ▪ Corrected volume flow	Off
Measuring mode	Select measuring mode for pulse output.	▪ Forward flow ▪ Forward/Reverse flow ▪ Reverse flow ▪ Reverse flow compensation	Forward flow
Value per pulse	Enter measured value at which a pulse is output.	Signed floating-point number	Depends on country and nominal diameter
Pulse width	Define time width of the output pulse.	0.5 to 2 000 ms	0.5 ms
Failure mode	Define output behavior in alarm condition.	▪ Actual value ▪ No pulses	No pulses
Invert output signal	Invert the output signal.	▪ No ▪ Yes	No

10.5 Advanced settings

The **Advanced setup** submenu together with its submenus contains parameters for specific settings.

Navigation to the "Advanced setup" submenu

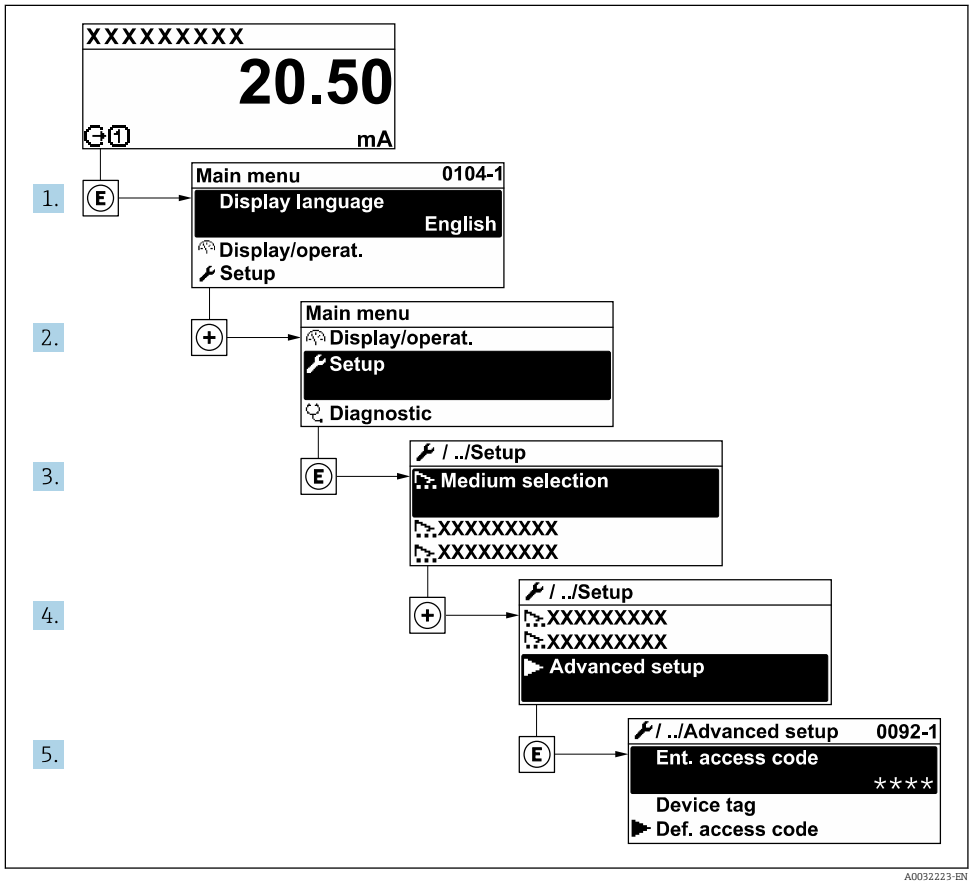

The number of submenus can vary depending on the device version. Some submenus are not dealt with in the Operating Instructions. These submenus and the parameters they contain are explained in the Special Documentation for the device.

Navigation
"Setup" menu → Advanced setup

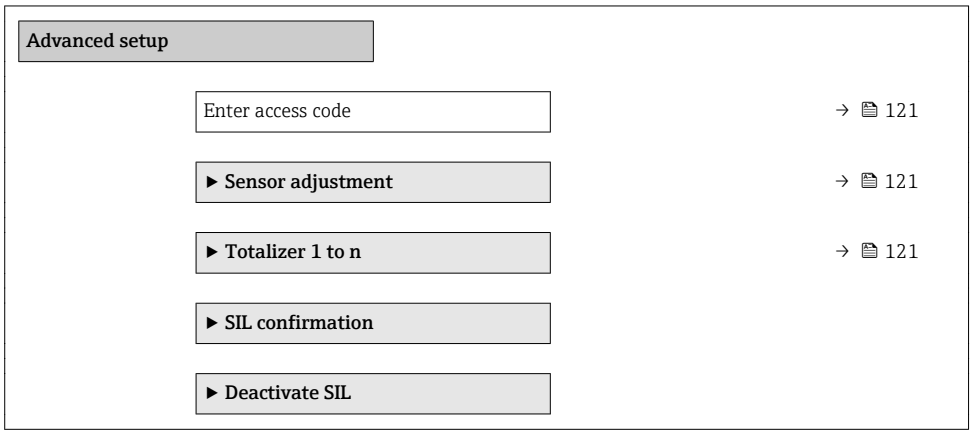

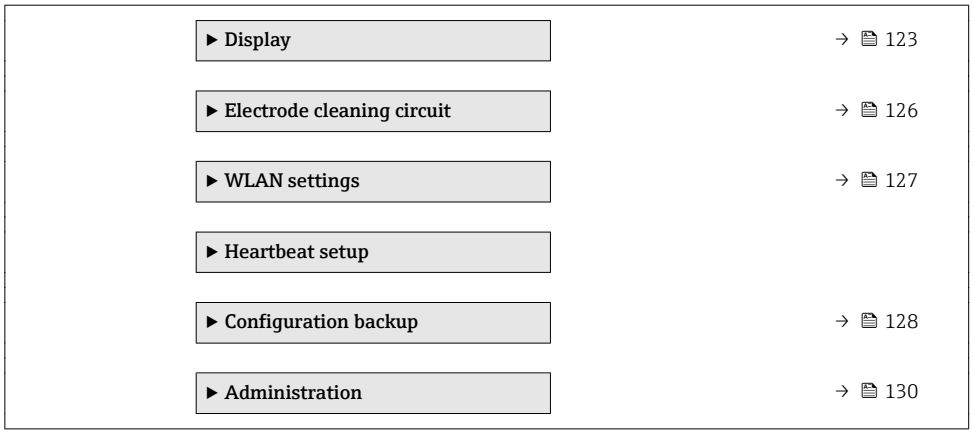

10.5.1 Using the parameter to enter the access code

Navigation
"Setup" menu → Advanced setup

Parameter overview with brief description

Parameter	Description	User entry
Enter access code	Enter access code to disable write protection of parameters.	Max. 16-digit character string comprising numbers, letters and special characters

10.5.2 Carrying out a sensor adjustment

The **Sensor adjustment** submenu contains parameters that pertain to the functionality of the sensor.

Navigation
"Setup" menu → Advanced setup → Sensor adjustment

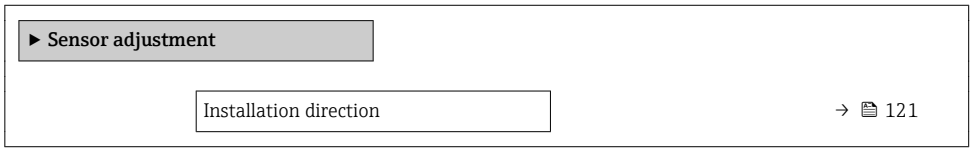

Parameter overview with brief description

Parameter	Description	Selection	Factory setting
Installation direction	Set sign of flow direction to match the direction of the arrow on the sensor.	▪ Flow in arrow direction ▪ Flow against arrow direction	Flow in arrow direction

10.5.3 Configuring the totalizer

In the **"Totalizer 1 to n" submenu** the individual totalizer can be configured.

Navigation
"Setup" menu → Advanced setup → Totalizer 1 to n

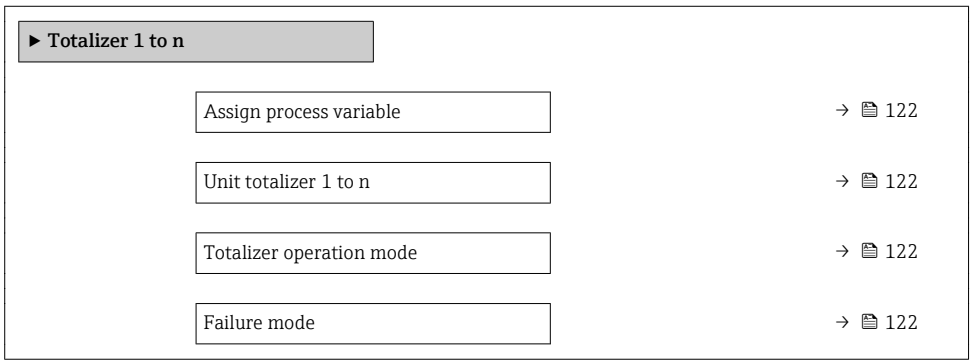

Parameter overview with brief description

Parameter	Prerequisite	Description	Selection	Factory setting
Assign process variable	–	Select process variable for totalizer.	▪ Off ▪ Volume flow ▪ Mass flow ▪ Corrected volume flow	Volume flow
Unit totalizer 1 to n	A process variable is selected in the **Assign process variable** parameter (→ 122) of the **Totalizer 1 to n** submenu.	Select process variable totalizer unit.	Unit choose list	l
Totalizer operation mode	A process variable is selected in the **Assign process variable** parameter (→ 122) of the **Totalizer 1 to n** submenu.	Select totalizer calculation mode.	▪ Net flow total ▪ Forward flow total ▪ Reverse flow total	Net flow total
Failure mode	A process variable is selected in the **Assign process variable** parameter (→ 122) of the **Totalizer 1 to n** submenu.	Define totalizer behavior in alarm condition.	▪ Stop ▪ Actual value ▪ Last valid value	Stop

10.5.4 Carrying out additional display configurations

In the **Display** submenu you can set all the parameters associated with the configuration of the local display.

Navigation
"Setup" menu → Advanced setup → Display

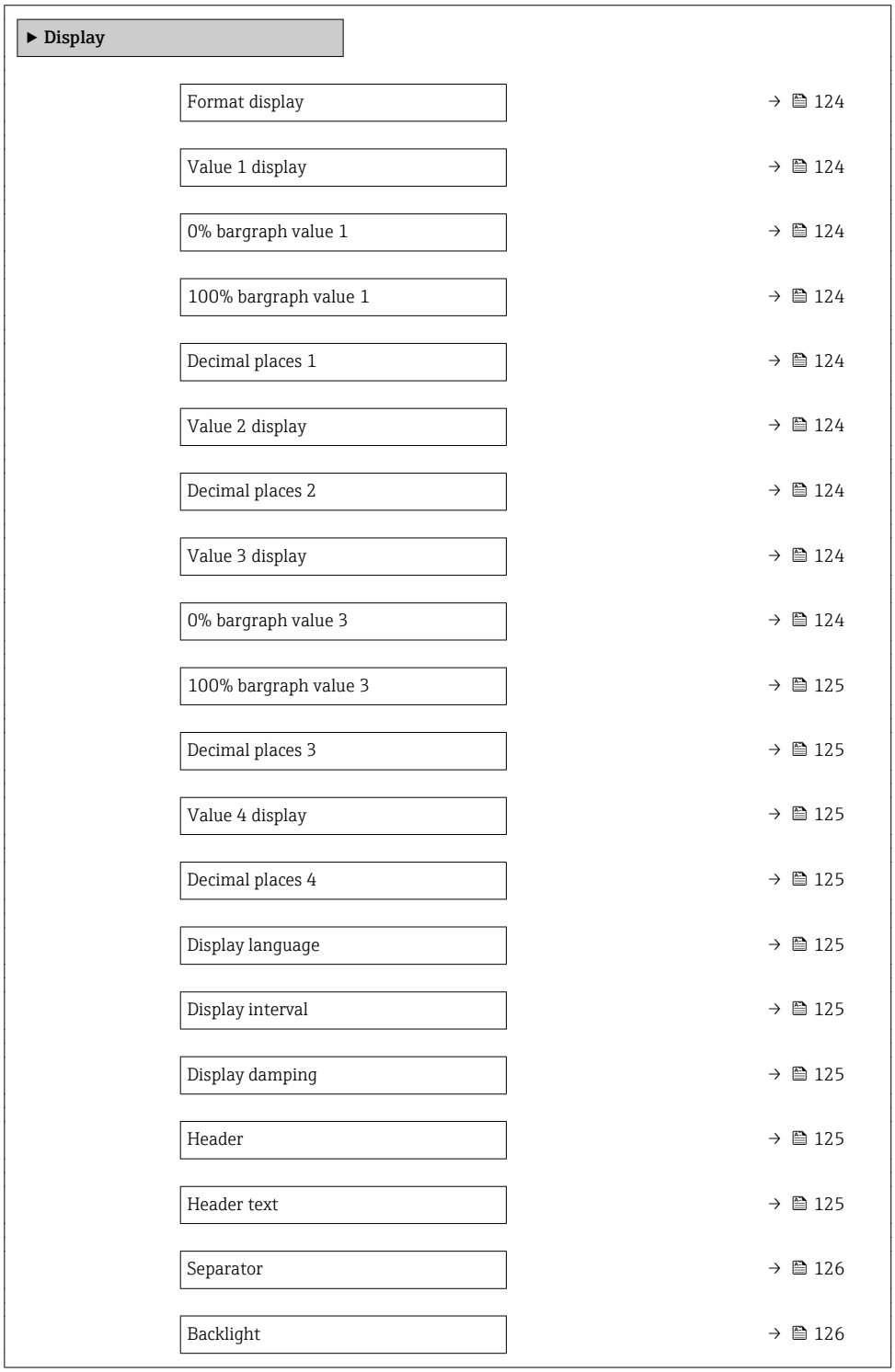

Parameter overview with brief description

Parameter	Prerequisite	Description	Selection / User entry	Factory setting
Format display	A local display is provided.	Select how measured values are shown on the display.	▪ 1 value, max. size ▪ 1 bargraph + 1 value ▪ 2 values ▪ 1 value large + 2 values ▪ 4 values	1 value, max. size
Value 1 display	A local display is provided.	Select the measured value that is shown on the local display.	▪ Volume flow ▪ Mass flow ▪ Corrected volume flow ▪ Flow velocity ▪ Totalizer 1 ▪ Totalizer 2 ▪ Totalizer 3 ▪ Current output 1 * ▪ Current output 2 * ▪ Current output 3 * ▪ Current output 4 * ▪ Electronic temperature ▪ Noise * ▪ Coil current shot time * ▪ Reference electrode potential against PE * ▪ Coating measured value * ▪ Test point 1 ▪ Test point 2 ▪ Test point 3	Volume flow
0% bargraph value 1	A local display is provided.	Enter 0% value for bar graph display.	Signed floating-point number	Country-specific: ▪ 0 l/h ▪ 0 gal/min (us)
100% bargraph value 1	A local display is provided.	Enter 100% value for bar graph display.	Signed floating-point number	Depends on country and nominal diameter
Decimal places 1	A measured value is specified in the **Value 1 display** parameter.	Select the number of decimal places for the display value.	▪ x ▪ x.x ▪ x.xx ▪ x.xxx ▪ x.xxxx	x.xx
Value 2 display	A local display is provided.	Select the measured value that is shown on the local display.	For the picklist, see the **Value 2 display** parameter (→ 112)	None
Decimal places 2	A measured value is specified in the **Value 2 display** parameter.	Select the number of decimal places for the display value.	▪ x ▪ x.x ▪ x.xx ▪ x.xxx ▪ x.xxxx	x.xx
Value 3 display	A local display is provided.	Select the measured value that is shown on the local display.	For the picklist, see the **Value 2 display** parameter (→ 112)	None
0% bargraph value 3	A selection was made in the **Value 3 display** parameter.	Enter 0% value for bar graph display.	Signed floating-point number	Country-specific: ▪ 0 l/h ▪ 0 gal/min (us)

Parameter	Prerequisite	Description	Selection / User entry	Factory setting
100% bargraph value 3	A selection was made in the **Value 3 display** parameter.	Enter 100% value for bar graph display.	Signed floating-point number	0
Decimal places 3	A measured value is specified in the **Value 3 display** parameter.	Select the number of decimal places for the display value.	▪ x ▪ x.x ▪ x.xx ▪ x.xxx ▪ x.xxxx	x.xx
Value 4 display	A local display is provided.	Select the measured value that is shown on the local display.	For the picklist, see the **Value 2 display** parameter (→ 🖹 112)	None
Decimal places 4	A measured value is specified in the **Value 4 display** parameter.	Select the number of decimal places for the display value.	▪ x ▪ x.x ▪ x.xx ▪ x.xxx ▪ x.xxxx	x.xx
Display language	A local display is provided.	Set display language.	▪ English ▪ Deutsch ▪ Français ▪ Español ▪ Italiano ▪ Nederlands ▪ Portuguesa ▪ Polski ▪ русский язык (Russian) ▪ Svenska ▪ Türkçe ▪ 中文 (Chinese) ▪ 日本語 (Japanese) ▪ 한국어 (Korean) ▪ العَرَبِيَة (Arabic) * ▪ Bahasa Indonesia ▪ ภาษาไทย (Thai) * ▪ tiếng Việt (Vietnamese) ▪ čeština (Czech)	English (alternatively, the ordered language is preset in the device)
Display interval	A local display is provided.	Set time measured values are shown on display if display alternates between values.	1 to 10 s	5 s
Display damping	A local display is provided.	Set display reaction time to fluctuations in the measured value.	0.0 to 999.9 s	0.0 s
Header	A local display is provided.	Select header contents on local display.	▪ Device tag ▪ Free text	Device tag
Header text	In the **Header** parameter, the **Free text** option is selected.	Enter display header text.	Max. 12 characters such as letters, numbers or special characters (e.g. @, %, /)	----------

Parameter	Prerequisite	Description	Selection / User entry	Factory setting
Separator	A local display is provided.	Select decimal separator for displaying numerical values.	▪ . (point) ▪ , (comma)	. (point)
Backlight	One of the following conditions is met: ▪ Order code for "Display; operation", option **F** "4-line, illum.; touch control" ▪ Order code for "Display; operation", option **G** "4-line, illum.; touch control +WLAN"	Switch the local display backlight on and off.	▪ Disable ▪ Enable	Enable

* Visibility depends on order options or device settings

10.5.5 Performing electrode cleaning

The **Electrode cleaning circuit** submenu contains parameters that must be configured for the configuration of electrode cleaning.

The submenu is only available if the device was ordered with electrode cleaning.

Navigation

"Setup" menu → Advanced setup → Electrode cleaning circuit

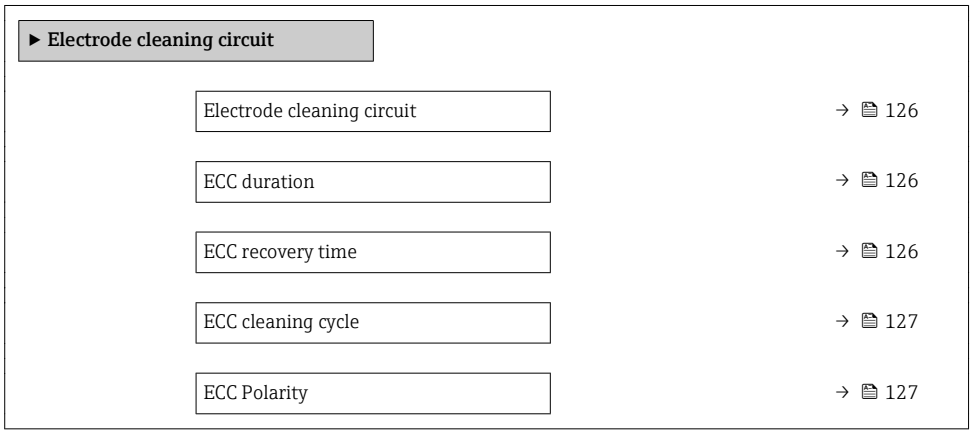

Parameter overview with brief description

Parameter	Prerequisite	Description	Selection / User entry / User interface	Factory setting
Electrode cleaning circuit	For the following order code: "Application package", option **EC** "ECC electrode cleaning"	Enable the cyclic electrode cleaning circuit.	▪ Off ▪ On	Off
ECC duration	For the following order code: "Application package", option **EC** "ECC electrode cleaning"	Enter the duration of electrode cleaning in seconds.	0.01 to 30 s	2 s
ECC recovery time	For the following order code: "Application package", option **EC** "ECC electrode cleaning"	Define recovery time after electrode cleaning. During this time the current output values will be held at last valid value.	1 to 600 s	60 s

Parameter	Prerequisite	Description	Selection / User entry / User interface	Factory setting
ECC cleaning cycle	For the following order code: "Application package", option **EC** "ECC electrode cleaning"	Enter the pause duration between electrode cleaning cycles.	0.5 to 168 h	0.5 h
ECC Polarity	For the following order code: "Application package", option **EC** "ECC electrode cleaning"	Select the polarity of the electrode cleaning circuit.	▪ Positive ▪ Negative	Depends on the electrode material: ▪ Platinum: **Negative** option ▪ Tantalum, Alloy C22, stainless steel: **Positive** option

10.5.6 WLAN configuration

The **WLAN Settings** submenu guides the user systematically through all the parameters that have to be set for the WLAN configuration.

Navigation
"Setup" menu → Advanced setup → WLAN settings

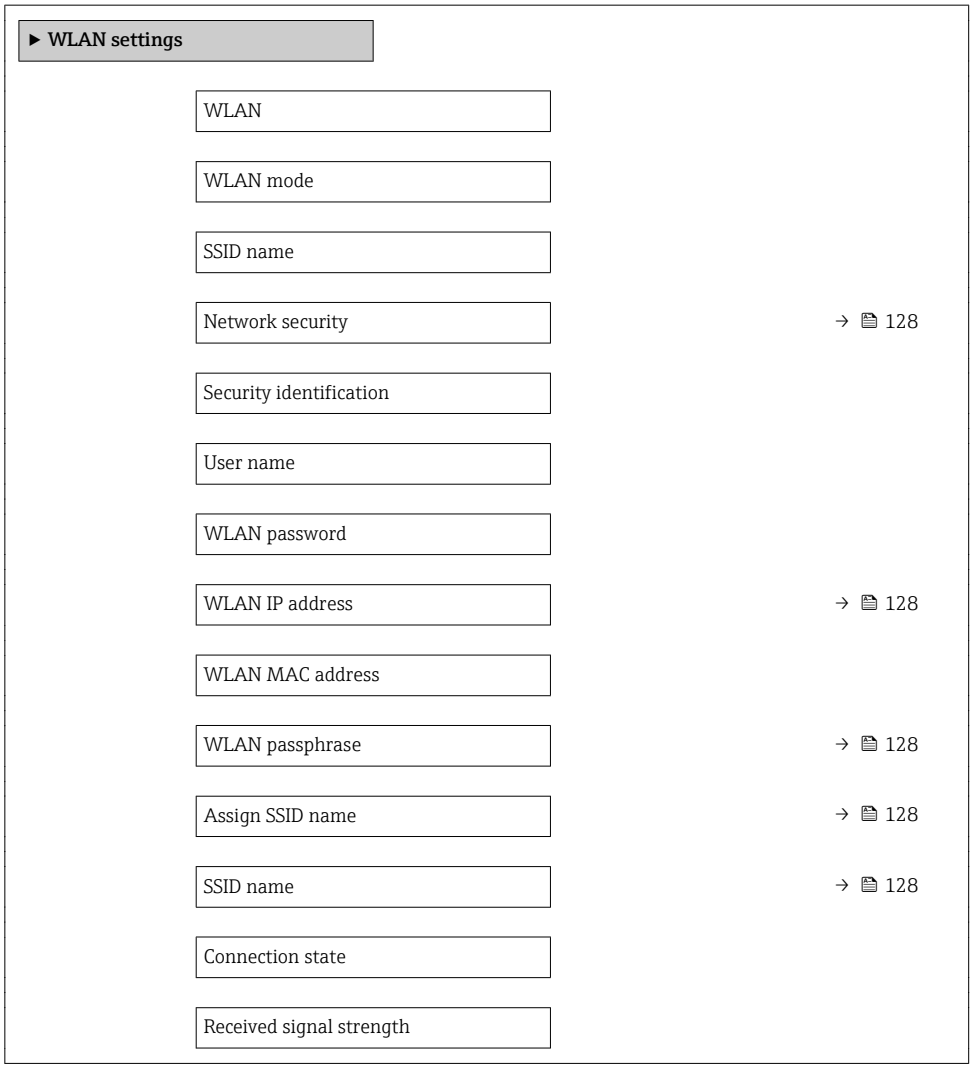

Parameter overview with brief description

Parameter	Prerequisite	Description	User entry / Selection	Factory setting
WLAN IP address	–	Enter IP address of the WLAN interface of the device.	4 octet: 0 to 255 (in the particular octet)	192.168.1.212
Network security	–	Select the security type of the WLAN network.	▪ Unsecured ▪ WPA2-PSK ▪ EAP-PEAP with MSCHAPv2 * ▪ EAP-PEAP MSCHAPv2 no server authentic. * ▪ EAP-TLS *	WPA2-PSK
WLAN passphrase	The **WPA2-PSK** option is selected in the **Security type** parameter.	Enter the network key (8 to 32 characters). The network key supplied with the device should be changed during commissioning for security reasons.	8 to 32-digit character string comprising numbers, letters and special characters (without spaces)	Serial number of the measuring device (e.g. L100A802000)
Assign SSID name	–	Select which name will be used for SSID: device tag or user-defined name.	▪ Device tag ▪ User-defined	User-defined
SSID name	▪ The **User-defined** option is selected in the **Assign SSID name** parameter. ▪ The **WLAN access point** option is selected in the **WLAN mode** parameter.	Enter the user-defined SSID name (max. 32 characters). The user-defined SSID name may only be assigned once. If the SSID name is assigned more than once, the devices can interfere with one another.	Max. 32-digit character string comprising numbers, letters and special characters	EH_device designation_last 7 digits of the serial number (e.g. EH_Promag_500_A802000)
Apply changes	–	Use changed WLAN settings.	▪ Cancel ▪ Ok	Cancel

* Visibility depends on order options or device settings

10.5.7 Configuration management

After commissioning, you can save the current device configurationor restore the previous device configuration.

You can do so using the **Configuration management** parameter and the related options found in the **Configuration backup** submenu.

Navigation
"Setup" menu → Advanced setup → Configuration backup

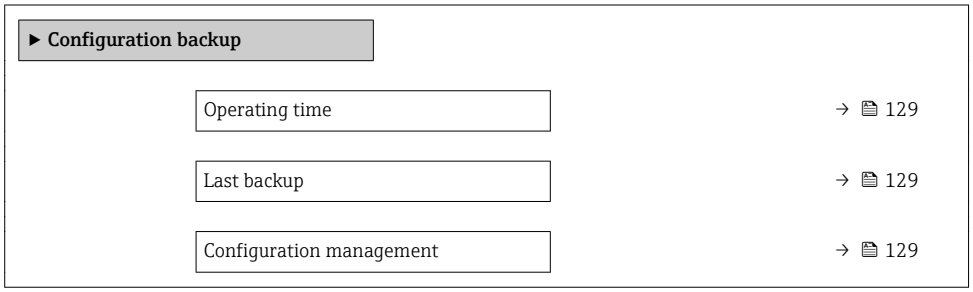

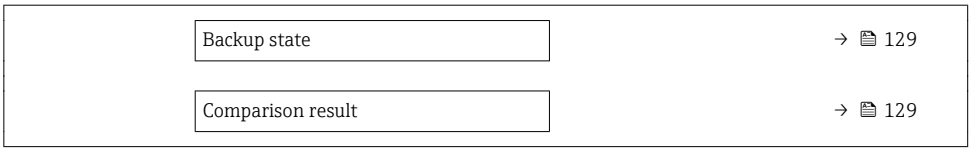

Parameter overview with brief description

Parameter	Description	User interface / Selection	Factory setting
Operating time	Indicates how long the device has been in operation.	Days (d), hours (h), minutes (m) and seconds (s)	–
Last backup	Shows when the last data backup was saved to HistoROM backup.	Days (d), hours (h), minutes (m) and seconds (s)	–
Configuration management	Select action for managing the device data in the HistoROM backup.	▪ Cancel ▪ Execute backup ▪ Restore * ▪ Compare * ▪ Clear backup data	Cancel
Backup state	Shows the current status of data saving or restoring.	▪ None ▪ Backup in progress ▪ Restoring in progress ▪ Delete in progress ▪ Compare in progress ▪ Restoring failed ▪ Backup failed	None
Comparison result	Comparison of current device data with HistoROM backup.	▪ Settings identical ▪ Settings not identical ▪ No backup available ▪ Backup settings corrupt ▪ Check not done ▪ Dataset incompatible	Check not done

* Visibility depends on order options or device settings

Function scope of the "Configuration management" parameter

Options	Description
Cancel	No action is executed and the user exits the parameter.
Execute backup	A backup copy of the current device configuration is saved from the HistoROM backup to the memory of the device. The backup copy includes the transmitter data of the device.
Restore	The last backup copy of the device configuration is restored from the device memory to the device's HistoROM backup. The backup copy includes the transmitter data of the device.
Compare	The device configuration saved in the device memory is compared with the current device configuration of the HistoROM backup.
Clear backup data	The backup copy of the device configuration is deleted from the memory of the device.

HistoROM backup
A HistoROM is a "non-volatile" device memory in the form of an EEPROM.

While this action is in progress, the configuration cannot be edited via the local display and a message on the processing status appears on the display.

10.5.8 Using parameters for device administration

The **Administration** submenu systematically guides the user through all the parameters that can be used for device administration purposes.

Navigation
"Setup" menu → Advanced setup → Administration

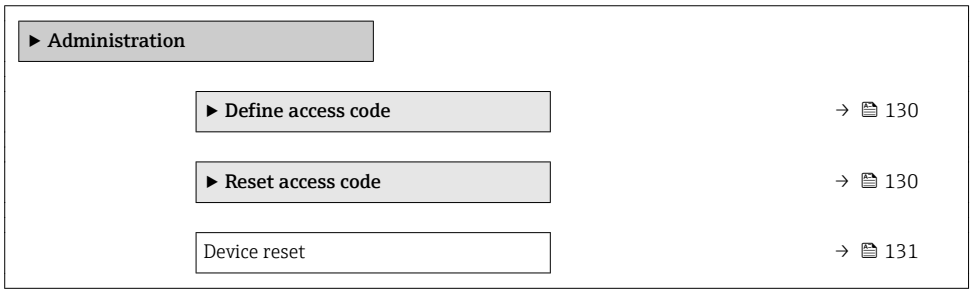

Using the parameter to define the access code

Navigation
"Setup" menu → Advanced setup → Administration → Define access code

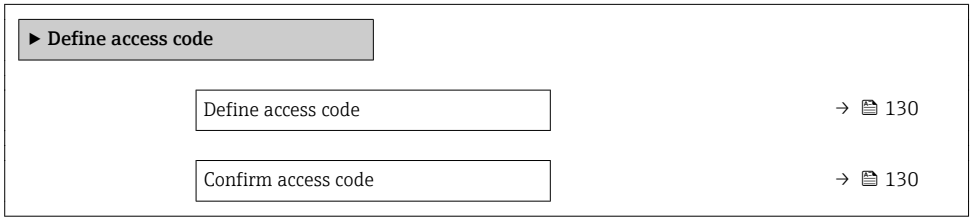

Parameter overview with brief description

Parameter	Description	User entry
Define access code	Restrict write-access to parameters to protect the configuration of the device against unintentional changes.	Max. 16-digit character string comprising numbers, letters and special characters
Confirm access code	Confirm the entered access code.	Max. 16-digit character string comprising numbers, letters and special characters

Using the parameter to reset the access code

Navigation
"Setup" menu → Advanced setup → Administration → Reset access code

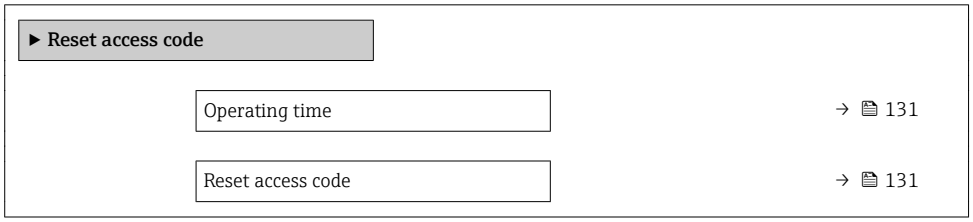

Parameter overview with brief description

Parameter	Description	User interface / User entry	Factory setting
Operating time	Indicates how long the device has been in operation.	Days (d), hours (h), minutes (m) and seconds (s)	–
Reset access code	Reset access code to factory settings. For a reset code, contact your Endress+Hauser service organization. The reset code can only be entered via: ▪ Web browser ▪ DeviceCare, FieldCare (via service interface CDI-RJ45) ▪ Fieldbus	Character string comprising numbers, letters and special characters	0x00

Using the parameter to reset the device

Navigation
"Setup" menu → Advanced setup → Administration

Parameter overview with brief description

Parameter	Description	Selection	Factory setting
Device reset	Reset the device configuration - either entirely or in part - to a defined state.	▪ Cancel ▪ To delivery settings ▪ Restart device ▪ Restore S-DAT backup *	Cancel

* Visibility depends on order options or device settings

10.6 Simulation

The **Simulation** submenu enables you to simulate, without a real flow situation, various process variables in the process and the device alarm mode and to verify downstream signal chains (switching valves or closed-control loops).

Navigation
"Diagnostics" menu → Simulation

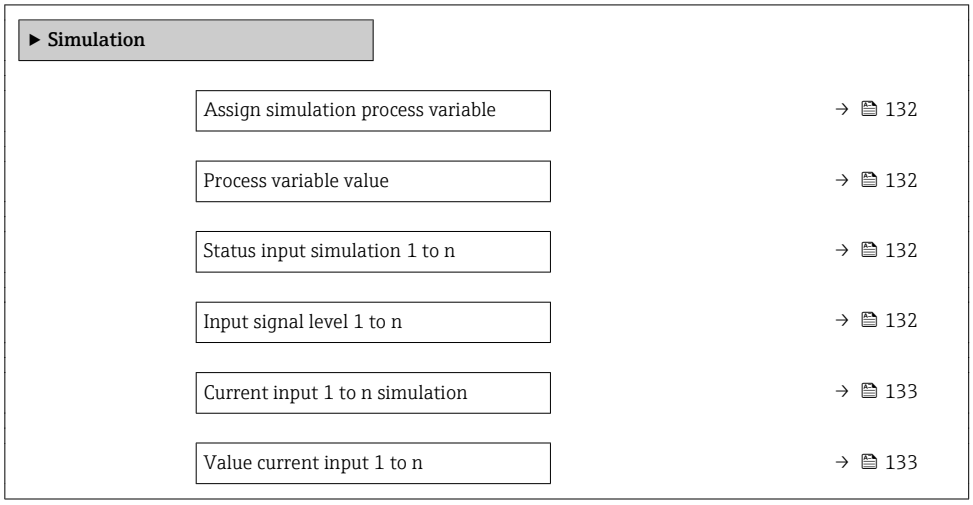

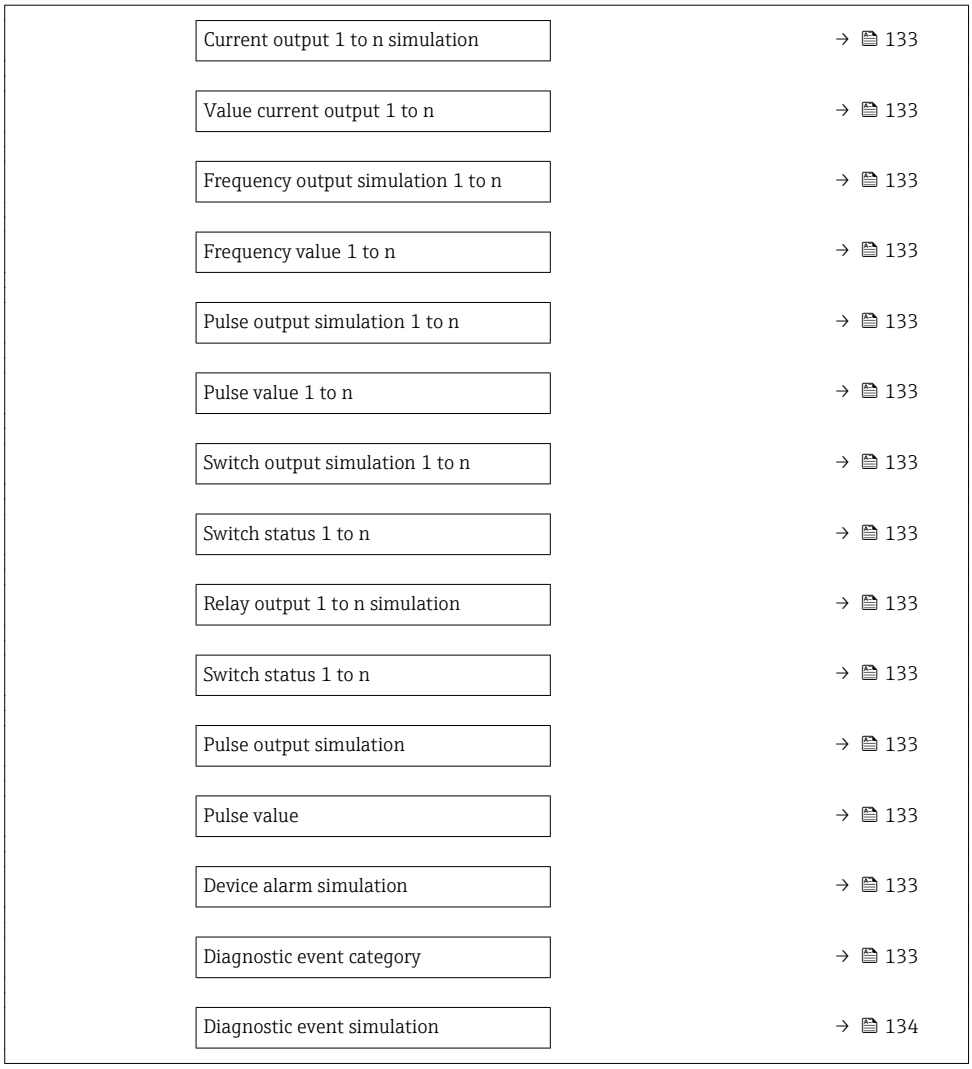

Parameter overview with brief description

Parameter	Prerequisite	Description	Selection / User entry / User interface	Factory setting
Assign simulation process variable	–	Select a process variable for the simulation process that is activated.	▪ Off ▪ Volume flow ▪ Mass flow ▪ Corrected volume flow ▪ Flow velocity ▪ Conductivity *	Off
Process variable value	A process variable is selected in the **Assign simulation process variable** parameter (→ 132).	Enter the simulation value for the selected process variable.	Depends on the process variable selected	0
Status input simulation 1 to n	–	Switch simulation of the status input on and off.	▪ Off ▪ On	Off
Input signal level 1 to n	In the **Status input simulation** parameter, the **On** option is selected.	Select the signal level for the simulation of the status input.	▪ High ▪ Low	High

Parameter	Prerequisite	Description	Selection / User entry / User interface	Factory setting
Current input 1 to n simulation	–	Switch simulation of the current input on and off.	▪ Off ▪ On	Off
Value current input 1 to n	In the **Current input 1 to n simulation** parameter, the **On** option is selected.	Enter the current value for simulation.	0 to 22.5 mA	0 mA
Current output 1 to n simulation	–	Switch the simulation of the current output on and off.	▪ Off ▪ On	Off
Value current output 1 to n	In the **Current output 1 to n simulation** parameter, the **On** option is selected.	Enter the current value for simulation.	3.59 to 22.5 mA	3.59 mA
Frequency output simulation 1 to n	In the **Operating mode** parameter, the **Frequency** option is selected.	Switch the simulation of the frequency output on and off.	▪ Off ▪ On	Off
Frequency value 1 to n	In the **Frequency output simulation 1 to n** parameter, the **On** option is selected.	Enter the frequency value for the simulation.	0.0 to 12 500.0 Hz	0.0 Hz
Pulse output simulation 1 to n	In the **Operating mode** parameter, the **Pulse** option is selected.	Set and switch off the pulse output simulation. For **Fixed value** option: **Pulse width** parameter (→ 106) defines the pulse width of the pulses output.	▪ Off ▪ Fixed value ▪ Down-counting value	Off
Pulse value 1 to n	In the **Pulse output simulation 1 to n** parameter, the **Down-counting value** option is selected.	Enter the number of pulses for simulation.	0 to 65 535	0
Switch output simulation 1 to n	In the **Operating mode** parameter, the **Switch** option is selected.	Switch the simulation of the switch output on and off.	▪ Off ▪ On	Off
Switch status 1 to n	–	Select the status of the status output for the simulation.	▪ Open ▪ Closed	Open
Relay output 1 to n simulation	–	Switch simulation of the relay output on and off.	▪ Off ▪ On	Off
Switch status 1 to n	The **On** option is selected in the **Switch output simulation 1 to n** parameter parameter.	Select status of the relay output for the simulation.	▪ Open ▪ Closed	Open
Pulse output simulation	–	Set and switch off the pulse output simulation. For **Fixed value** option: **Pulse width** parameter defines the pulse width of the pulses output.	▪ Off ▪ Fixed value ▪ Down-counting value	Off
Pulse value	In the **Pulse output simulation** parameter, the **Down-counting value** option is selected.	Set and switch off the pulse output simulation.	0 to 65 535	0
Device alarm simulation	–	Switch the device alarm on and off.	▪ Off ▪ On	Off
Diagnostic event category	–	Select a diagnostic event category.	▪ Sensor ▪ Electronics ▪ Configuration ▪ Process	Process

Parameter	Prerequisite	Description	Selection / User entry / User interface	Factory setting
Diagnostic event simulation	–	Select a diagnostic event to simulate this event.	▪ Off ▪ Diagnostic event picklist (depends on the category selected)	Off
Logging interval	–	Define the logging interval tlog for data logging. This value defines the time interval between the individual data points in the memory.	1.0 to 3 600.0 s	–

* Visibility depends on order options or device settings

10.7 Protecting settings from unauthorized access

The following write protection options exist in order to protect the configuration of the measuring device from unintentional modification:
- Protect access to parameters via access code → 134
- Protect access to local operation via key locking → 77
- Protect access to measuring device via write protection switch → 135

10.7.1 Write protection via access code

The effects of the user-specific access code are as follows:
- Via local operation, the parameters for the measuring device configuration are write-protected and their values can no longer be changed.
- Device access is protected via the Web browser, as are the parameters for the measuring device configuration.
- Device access is protected via FieldCare or DeviceCare (via CDI-RJ45 service interface), as are the parameters for the measuring device configuration.

Defining the access code via local display

1. Navigate to the **Define access code** parameter (→ 130).
2. Define a max. 16-digit character string comprising numbers, letters and special characters as the access code.
3. Enter the access code again in the **Confirm access code** parameter (→ 130) to confirm the code.
   ↳ The -symbol appears in front of all write-protected parameters.

The device automatically locks the write-protected parameters again if a key is not pressed for 10 minutes in the navigation and editing view. The device locks the write-protected parameters automatically after 60 s if the user skips back to the operational display mode from the navigation and editing view.

- If parameter write protection is activated via an access code, it can also only be deactivated via this access code → 76.
- The user role with which the user is currently logged on via the local display → 76 is indicated by the **Access status** parameter. Navigation path: Operation → Access status

Parameters which can always be modified via the local display

Certain parameters that do not affect the measurement are excepted from parameter write protection via the local display. Despite the user-specific access code, they can always be modified, even if the other parameters are locked.

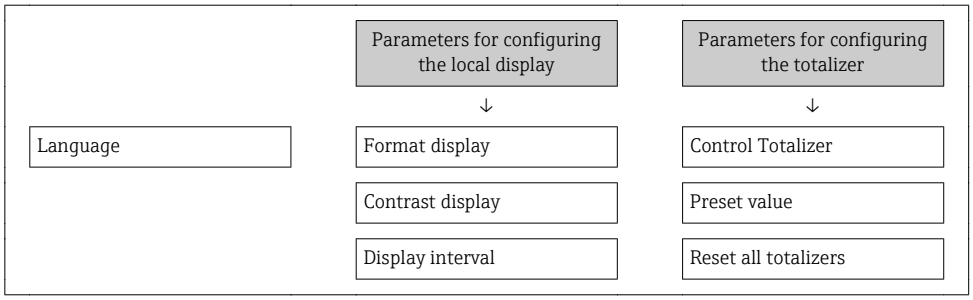

Defining the access code via the Web browser

1. Navigate to the **Define access code** parameter (→ 130).
2. Define a max. 16-digit numeric code as an access code.
3. Enter the access code again in the **Confirm access code** parameter (→ 130) to confirm the code.
   ↳ The Web browser switches to the login page.

If no action is performed for 10 minutes, the Web browser automatically returns to the login page.

- If parameter write protection is activated via an access code, it can also only be deactivated via this access code → 76.
- The user role with which the user is currently logged on via Web browser is indicated by the **Access status** parameter. Navigation path: Operation → Access status

Resetting the access code

If you misplace the user-specific access code, it is possible to reset the code to the factory setting. A reset code must be entered for this purpose. The user-specific access code can then be defined again afterwards.

Via Web browser, FieldCare, DeviceCare (via CDI-RJ45 service interface), fieldbus

For a reset code, contact your Endress+Hauser service organization.

1. Navigate to the **Reset access code** parameter (→ 131).
2. Enter the reset code.
   ↳ The access code has been reset to the factory setting **0000**. It can be redefined → 134.

10.7.2 Write protection via write protection switch

Unlike parameter write protection via a user-specific access code, this allows write access to the entire operating menu - except for the **"Contrast display" parameter** - to be locked.

The parameter values are now read only and cannot be edited any more (exception **"Contrast display" parameter**):
- Via local display
- Via HART protocol

Proline 500 – digital

WARNING

Excessive tightening torque applied to the fixing screws!
Risk of damaging the plastic transmitter.
► Tighten the fixing screws as per the tightening torque: 2 Nm (1.5 lbf ft)

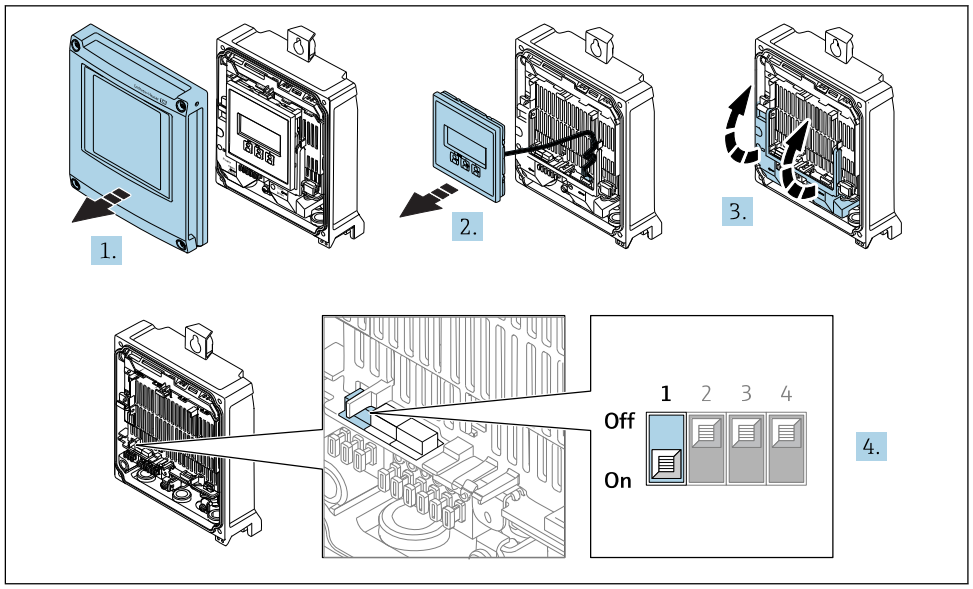

1. Open the housing cover.
2. Remove the display module.
3. Fold open the terminal cover.
4. Setting the write protection (WP) switch on the main electronics module to the **ON** position enables hardware write protection.
   ↳ In the **Locking status** parameter the **Hardware locked** option is displayed → 138. In addition, on the local display the -symbol appears in front of the parameters in the header of the operational display and in the navigation view.

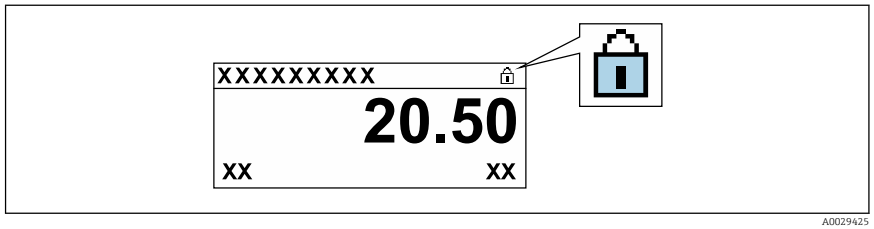

5. Setting the write protection (WP) switch on the main electronics module to the **OFF** position (factory setting) disables hardware write protection.
   ↳ No option is displayed in the **Locking status** parameter → 138. On the local display, the -symbol disappears from in front of the parameters in the header of the operational display and in the navigation view.

Proline 500

1.

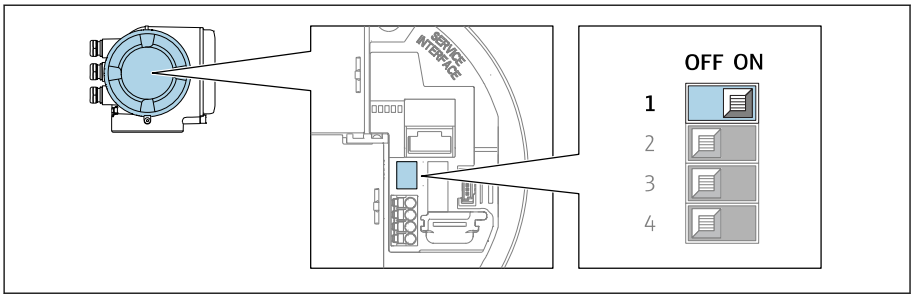

Setting the write protection (WP) switch on the main electronics module to the **ON** position enables hardware write protection.

↳ In the **Locking status** parameter the **Hardware locked** option is displayed → 138. In addition, on the local display the -symbol appears in front of the parameters in the header of the operational display and in the navigation view.

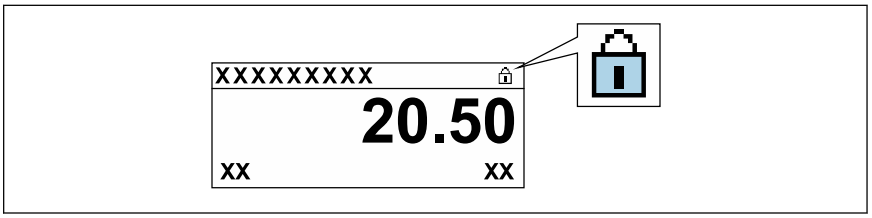

2. Setting the write protection (WP) switch on the main electronics module to the **OFF** position (factory setting) disables hardware write protection.

↳ No option is displayed in the **Locking status** parameter → 138. On the local display, the -symbol disappears from in front of the parameters in the header of the operational display and in the navigation view.

11 Operation

11.1 Reading the device locking status

Device active write protection: **Locking status** parameter

Operation → Locking status

Function scope of the "Locking status" parameter

Options	Description
None	The access status displayed in the **Access status** parameter applies → 📄 76. Only appears on local display.
Hardware locked	The DIP switch for hardware locking is activated on the PCB board. This locks write access to the parameters (e.g. via local display or operating tool) → 📄 135.
SIL locked	The SIL mode is enabled. This locks write access to the parameters (e.g. via local display or operating tool).
Temporarily locked	Write access to the parameters is temporarily locked on account of internal processes running in the device (e.g. data upload/download, reset etc.). Once the internal processing has been completed, the parameters can be changed once again.

11.2 Adjusting the operating language

Detailed information:
- To configure the operating language → 📄 95
- For information on the operating languages supported by the measuring device → 📄 201

11.3 Configuring the display

Detailed information:
- On the basic settings for the local display → 📄 111
- On the advanced settings for the local display → 📄 123

11.4 Reading measured values

With the **Measured values** submenu, it is possible to read all the measured values.

11.4.1 "Process variables" submenu

The **Process variables** submenu contains all the parameters needed to display the current measured values for each process variable.

Navigation
"Diagnostics" menu → Measured values → Process variables

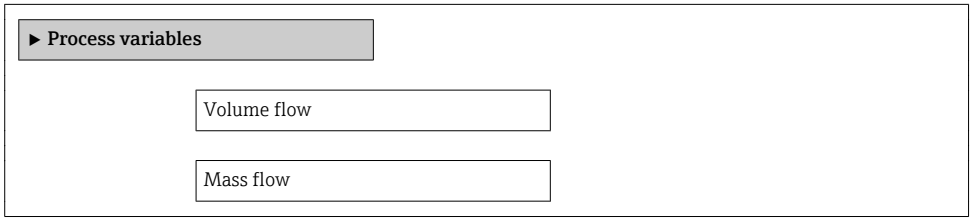

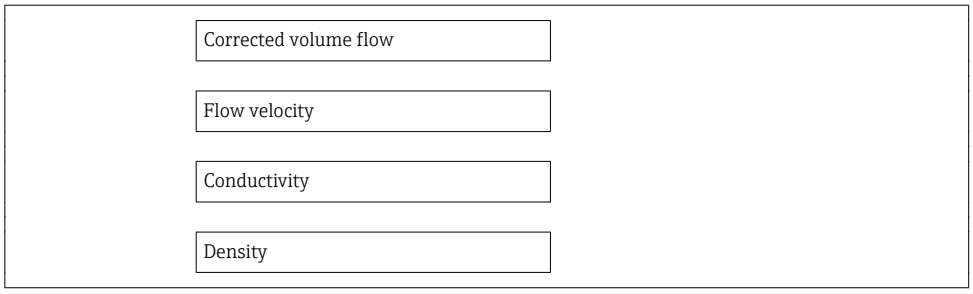

Parameter overview with brief description

Parameter	Description	User interface
Volume flow	Displays the volume flow that is currently measured. *Dependency* The unit is taken from the **Volume flow unit** parameter (→ 🖹 98).	Signed floating-point number
Mass flow	Displays the mass flow currently calculated. *Dependency* The unit is taken from the **Mass flow unit** parameter (→ 🖹 98).	Signed floating-point number
Corrected volume flow	Displays the corrected volume flow that is currently calculated. *Dependency* The unit is taken from the **Corrected volume flow unit** parameter (→ 🖹 99).	Signed floating-point number
Flow velocity	Displays the flow velocity that is currently calculated.	Signed floating-point number
Conductivity	Displays the conductivity that is currently measured. *Dependency* The unit is taken from the **Conductivity unit** parameter (→ 🖹 98).	Signed floating-point number
Density	Displays the current fixed density or density read in from an external device. *Dependency* The unit is taken from the **Density unit** parameter.	Signed floating-point number

11.4.2 "Totalizer" submenu

The **Totalizer** submenu contains all the parameters needed to display the current measured values for every totalizer.

Navigation

"Diagnostics" menu → Measured values → Totalizer

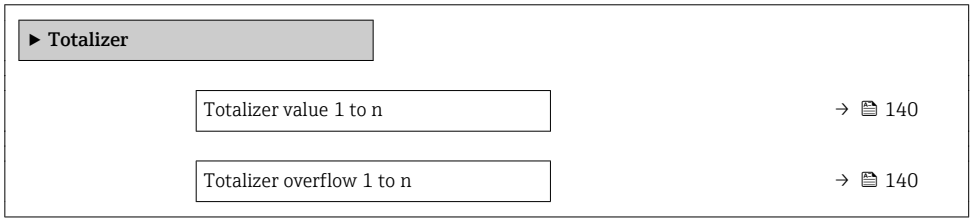

Parameter overview with brief description

Parameter	Prerequisite	Description	User interface
Totalizer value 1 to n	A process variable is selected in the **Assign process variable** parameter (→ 122) of the **Totalizer 1 to n** submenu.	Displays the current totalizer counter value.	Signed floating-point number
Totalizer overflow 1 to n	A process variable is selected in the **Assign process variable** parameter (→ 122) of the **Totalizer 1 to n** submenu.	Displays the current totalizer overflow.	Integer with sign

11.4.3 "Input values" submenu

The **Input values** submenu guides you systematically to the individual input values.

Navigation

"Diagnostics" menu → Measured values → Input values

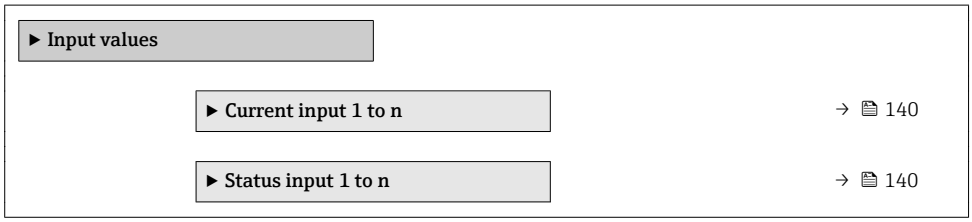

Input values of current input

The **Current input 1 to n** submenu contains all the parameters needed to display the current measured values for every current input.

Navigation

"Diagnostics" menu → Measured values → Input values → Current input 1 to n

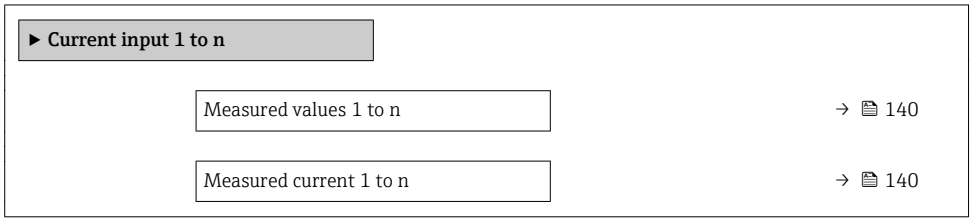

Parameter overview with brief description

Parameter	Description	User interface
Measured values 1 to n	Displays the current input value.	Signed floating-point number
Measured current 1 to n	Displays the current value of the current input.	0 to 22.5 mA

Input values of status input

The **Status input 1 to n** submenu contains all the parameters needed to display the current measured values for every status input.

Navigation
"Diagnostics" menu → Measured values → Input values → Status input 1 to n

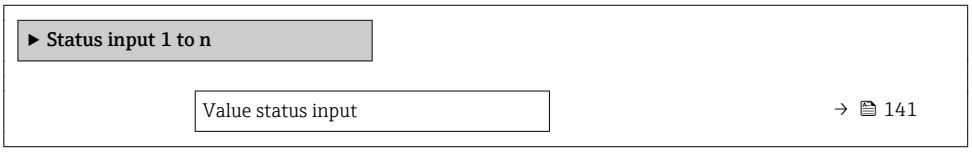

Parameter overview with brief description

Parameter	Description	User interface
Value status input	Shows the current input signal level.	▪ High ▪ Low

11.4.4 Output values

The **Output values** submenu contains all the parameters needed to display the current measured values for every output.

Navigation
"Diagnostics" menu → Measured values → Output values

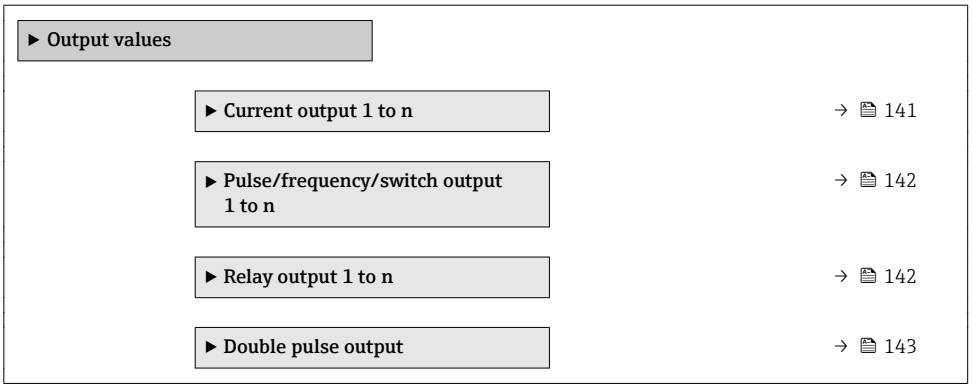

Output values of current output

The **Value current output** submenu contains all the parameters needed to display the current measured values for every current output.

Navigation
"Diagnostics" menu → Measured values → Output values → Value current output 1 to n

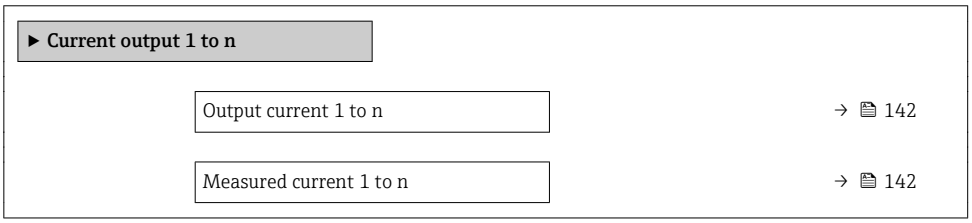

Parameter overview with brief description

Parameter	Description	User interface
Output current 1	Displays the current value currently calculated for the current output.	3.59 to 22.5 mA
Measured current	Displays the current value currently measured for the current output.	0 to 30 mA

Output values for pulse/frequency/switch output

The **Pulse/frequency/switch output 1 to n** submenu contains all the parameters needed to display the current measured values for every pulse/frequency/switch output.

Navigation

"Diagnostics" menu → Measured values → Output values → Pulse/frequency/switch output 1 to n

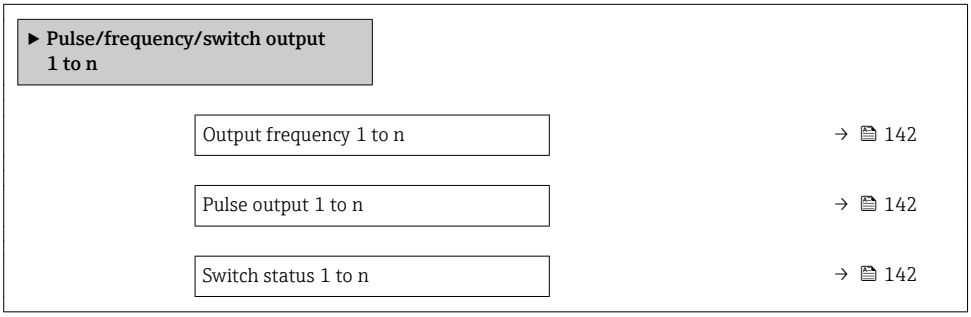

Parameter overview with brief description

Parameter	Prerequisite	Description	User interface
Output frequency 1 to n	In the **Operating mode** parameter, the **Frequency** option is selected.	Displays the value currently measured for the frequency output.	0.0 to 12 500.0 Hz
Pulse output 1 to n	The **Pulse** option is selected in the **Operating mode** parameter parameter.	Displays the pulse frequency currently output.	Positive floating-point number
Switch status 1 to n	The **Switch** option is selected in the **Operating mode** parameter.	Displays the current switch output status.	▪ Open ▪ Closed

Output values for relay output

The **Relay output 1 to n** submenu contains all the parameters needed to display the current measured values for every relay output.

Navigation

"Diagnostics" menu → Measured values → Output values → Relay output 1 to n

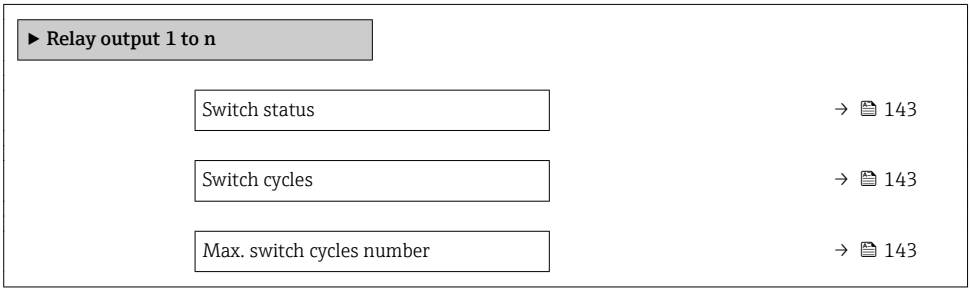

Parameter overview with brief description

Parameter	Description	User interface
Switch status	Shows the current relay switch status.	▪ Open ▪ Closed
Switch cycles	Shows number of all performed switch cycles.	Positive integer
Max. switch cycles number	Shows the maximal number of guaranteed switch cycles.	Positive integer

Output values for double pulse output

The **Double pulse output** submenu contains all the parameters needed to display the current measured values for every double pulse output.

Navigation
"Diagnostics" menu → Measured values → Output values → Double pulse output

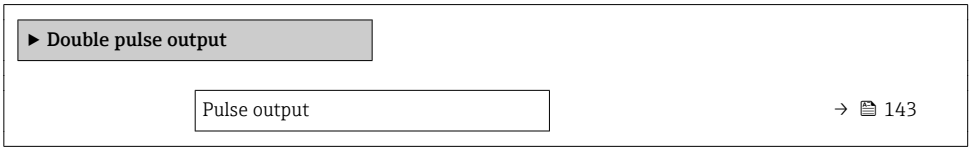

Parameter overview with brief description

Parameter	Description	User interface
Pulse output	Shows the currently output pulse frequency.	Positive floating-point number

11.5 Adapting the measuring device to the process conditions

The following are available for this purpose:
- Basic settings using the**Setup** menu (→ 95)
- Advanced settings using the**Advanced setup** submenu (→ 120)

11.6 Performing a totalizer reset

The totalizers are reset in the **Operation** submenu:
- Control Totalizer
- Reset all totalizers

Navigation
"Operation" menu → Totalizer handling

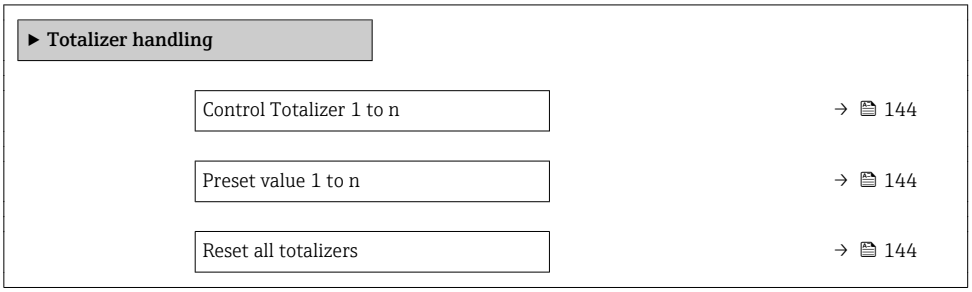

Parameter overview with brief description

Parameter	Prerequisite	Description	Selection / User entry	Factory setting
Control Totalizer 1 to n	A process variable is selected in the **Assign process variable** parameter (→ 122) of the **Totalizer 1 to n** submenu.	Control totalizer value.	▪ Totalize ▪ Reset + hold * ▪ Preset + hold * ▪ Reset + totalize ▪ Preset + totalize * ▪ Hold *	Totalize
Preset value 1 to n	A process variable is selected in the **Assign process variable** parameter (→ 122) of the **Totalizer 1 to n** submenu.	Specify start value for totalizer. *Dependency* The unit of the selected process variable is specified for the totalizer in the **Unit totalizer** parameter (→ 122).	Signed floating-point number	0 l
Reset all totalizers	–	Reset all totalizers to 0 and start.	▪ Cancel ▪ Reset + totalize	Cancel

* Visibility depends on order options or device settings

11.6.1 Function scope of the "Control Totalizer" parameter

Options	Description
Totalize	The totalizer is started or continues running.
Reset + hold	The totaling process is stopped and the totalizer is reset to 0.
Preset + hold	The totaling process is stopped and the totalizer is set to its defined start value from the **Preset value** parameter.
Reset + totalize	The totalizer is reset to 0 and the totaling process is restarted.
Preset + totalize	The totalizer is set to the defined start value from the **Preset value** parameter and the totaling process is restarted.
Hold	Totalizing is stopped.

11.6.2 Function scope of the "Reset all totalizers" parameter

Options	Description
Cancel	No action is executed and the user exits the parameter.
Reset + totalize	Resets all totalizers to 0 and restarts the totaling process. This deletes all the flow values previously totalized.

11.7 Showing data logging

The **Extended HistoROM** application package must be enabled in the device (order option) for the **Data logging** submenu to appear. This contains all the parameters for the measured value history.

Data logging is also available via:
- Plant Asset Management Tool FieldCare → 88.
- Web browser

Function range
- A total of 1000 measured values can be stored
- 4 logging channels
- Adjustable logging interval for data logging
- Displays the measured value trend for each logging channel in the form of a chart

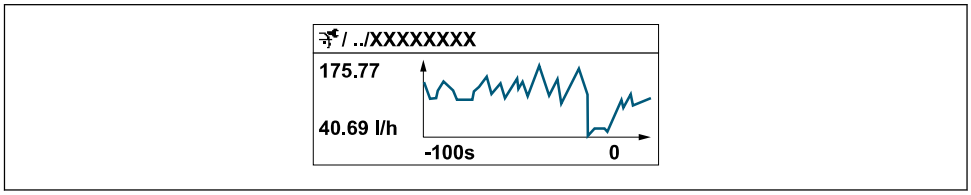

- x-axis: depending on the number of channels selected displays 250 to 1000 measured values of a process variable.
- y-axis: displays the approximate measured value span and constantly adapts this to the ongoing measurement.

If the length of the logging interval or the assignment of the process variables to the channels is changed, the content of the data logging is deleted.

Navigation
"Diagnostics" menu → Data logging

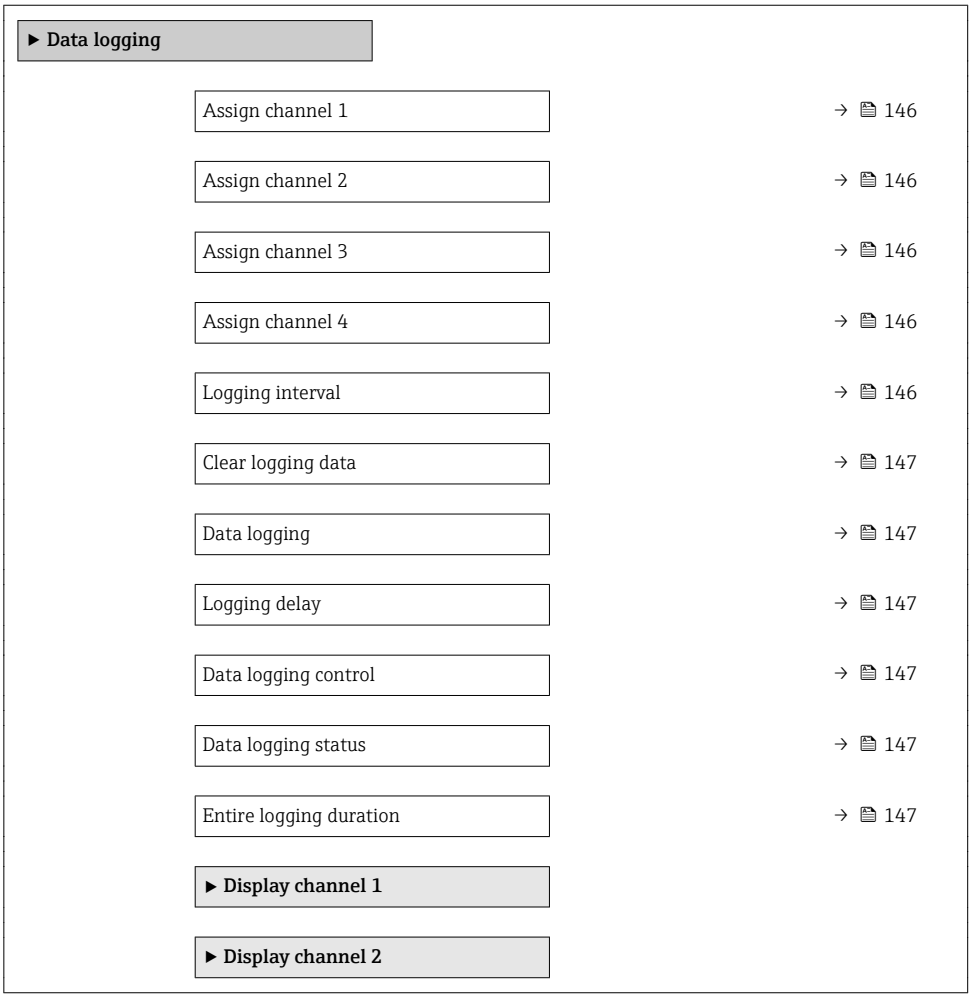

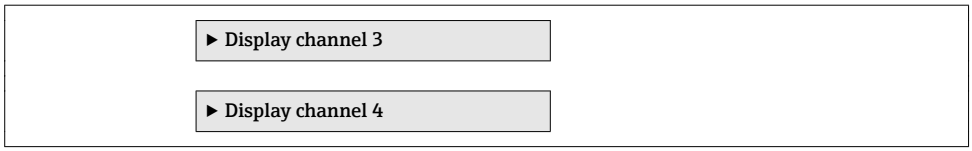

Parameter overview with brief description

Parameter	Prerequisite	Description	Selection / User entry / User interface	Factory setting
Assign channel 1	The **Extended HistoROM** application package is available.	Assign process variable to logging channel.	▪ Off ▪ Volume flow ▪ Mass flow ▪ Corrected volume flow ▪ Flow velocity ▪ Conductivity * ▪ Electronic temperature ▪ Current output 1 * ▪ Current output 2 * ▪ Current output 3 * ▪ Current output 4 * ▪ Noise * ▪ Coil current shot time * ▪ Reference electrode potential against PE * ▪ Coating measured value * ▪ Test point 1 ▪ Test point 2 ▪ Test point 3	Off
Assign channel 2	The **Extended HistoROM** application package is available. The software options currently enabled are displayed in the **Software option overview** parameter.	Assign process variable to logging channel.	Picklist, see **Assign channel 1** parameter (→ 146)	Off
Assign channel 3	The **Extended HistoROM** application package is available. The software options currently enabled are displayed in the **Software option overview** parameter.	Assign process variable to logging channel.	Picklist, see **Assign channel 1** parameter (→ 146)	Off
Assign channel 4	The **Extended HistoROM** application package is available. The software options currently enabled are displayed in the **Software option overview** parameter.	Assign process variable to logging channel.	Picklist, see **Assign channel 1** parameter (→ 146)	Off
Logging interval	The **Extended HistoROM** application package is available.	Define the logging interval for data logging. This value defines the time interval between the individual data points in the memory.	0.1 to 3 600.0 s	1.0 s

Parameter	Prerequisite	Description	Selection / User entry / User interface	Factory setting
Clear logging data	The **Extended HistoROM** application package is available.	Clear the entire logging data.	▪ Cancel ▪ Clear data	Cancel
Data logging	–	Select the data logging method.	▪ Overwriting ▪ Not overwriting	Overwriting
Logging delay	In the **Data logging** parameter, the **Not overwriting** option is selected.	Enter the time delay for measured value logging.	0 to 999 h	0 h
Data logging control	In the **Data logging** parameter, the **Not overwriting** option is selected.	Start and stop measured value logging.	▪ None ▪ Delete + start ▪ Stop	None
Data logging status	In the **Data logging** parameter, the **Not overwriting** option is selected.	Displays the measured value logging status.	▪ Done ▪ Delay active ▪ Active ▪ Stopped	Done
Entire logging duration	In the **Data logging** parameter, the **Not overwriting** option is selected.	Displays the total logging duration.	Positive floating-point number	0 s

* Visibility depends on order options or device settings

12 Diagnostics and troubleshooting

12.1 General troubleshooting

For local display

Error	Possible causes	Solution
Local display dark and no output signals	Supply voltage does not match the value indicated on the nameplate.	Apply the correct supply voltage .
Local display dark and no output signals	The polarity of the supply voltage is wrong.	Correct the polarity.
Local display dark and no output signals	No contact between connecting cables and terminals.	Check the connection of the cables and correct if necessary.
Local display dark and no output signals	Terminals are not plugged into the I/O electronics module correctly. Terminals are not plugged into the main electronics module correctly.	Check terminals.
Local display dark and no output signals	I/O electronics module is defective. Main electronics module is defective.	Order spare part → 174.
Local display dark and no output signals	The connector between the main electronics module and display module is not plugged in correctly.	Check the connection and correct if necessary.
Local display dark and no output signals	The connecting cable is not plugged in correctly.	1. Check the connection of the electrode cable and correct if necessary. 2. Check the connection of the coil current cable and correct if necessary.
Local display is dark, but signal output is within the valid range	Display is set too bright or too dark.	▪ Set the display brighter by simultaneously pressing ⊞ + Ⓔ. ▪ Set the display darker by simultaneously pressing ⊟ + Ⓔ.
Local display is dark, but signal output is within the valid range	The cable of the display module is not plugged in correctly.	Insert the plug correctly into the main electronics module and display module.
Local display is dark, but signal output is within the valid range	Display module is defective.	Order spare part → 174.
Backlighting of local display is red	Diagnostic event with "Alarm" diagnostic behavior has occurred.	Take remedial measures → 160
Text on local display appears in a foreign language and cannot be understood.	Incorrect operating language is configured.	1. Press ⊟ + ⊞ for 2 s ("home position"). 2. Press Ⓔ. 3. Set the desired language in the **Display language** parameter (→ 125).
Message on local display: "Communication Error" "Check Electronics"	Communication between the display module and the electronics is interrupted.	▪ Check the cable and the connector between the main electronics module and display module. ▪ Order spare part → 174.

For output signals

Error	Possible causes	Solution
Signal output outside the valid range	Main electronics module is defective.	Order spare part → 🖹 174.
Signal output outside the valid current range (< 3.6 mA or > 22 mA)	Main electronics module is defective. I/O electronics module is defective.	Order spare part → 🖹 174.
Device shows correct value on local display, but signal output is incorrect, though in the valid range.	Configuration error	Check and correct the parameter configuration.
Device measures incorrectly.	Configuration error or device is operated outside the application.	1. Check and correct parameter configuration. 2. Observe limit values specified in the "Technical Data".

For access

Error	Possible causes	Solution
No write access to parameters	Hardware write protection enabled	Set the write protection switch on main electronics module to the **OFF** position → 🖹 135.
No write access to parameters	Current user role has limited access authorization	1. Check user role → 🖹 76. 2. Enter correct customer-specific access code → 🖹 76.
No connection via HART protocol	Communication resistor missing or incorrectly installed.	Install the communication resistor (250 Ω) correctly. Observe the maximum load → 🖹 184.
No connection via HART protocol	Commubox ▪ Connected incorrectly ▪ Configured incorrectly ▪ Drivers not installed correctly ▪ USB interface on computer configured incorrectly	Observe the documentation for the Commubox. FXA195 HART: Document "Technical Information" TI00404F
Not connecting to Web server	Web server disabled	Using the "FieldCare" or "DeviceCare" operating tool, check whether the Web server of the measuring device is enabled, and enable it if necessary→ 🖹 83.
	Incorrect setting for the Ethernet interface of the computer	1. Check the properties of the Internet protocol (TCP/IP) → 🖹 79→ 🖹 79. 2. Check the network settings with the IT manager.
Not connecting to Web server	Incorrect IP address	Check the IP address: 192.168.1.212 → 🖹 79→ 🖹 79
Not connecting to Web server	Incorrect WLAN access data	▪ Check WLAN network status. ▪ Log on to the device again using WLAN access data. ▪ Verify that WLAN is enabled on the measuring device and operating device → 🖹 79.
	WLAN communication disabled	–
Not connecting to Web server, FieldCare or DeviceCare	No WLAN network available	▪ Check if WLAN reception is present: LED on display module is lit blue ▪ Check if WLAN connection is enabled: LED on display module flashes blue ▪ Switch on instrument function.

Error	Possible causes	Solution
Network connection not present or unstable	WLAN network is weak.	▪ Operating device is outside of reception range: Check network status on operating device. ▪ To improve network performance, use an external WLAN antenna.
	Parallel WLAN and Ethernet communication	▪ Check network settings. ▪ Temporarily enable only the WLAN as an interface.
Web browser frozen and operation no longer possible	Data transfer active	Wait until data transfer or current action is finished.
	Connection lost	1. Check cable connection and power supply. 2. Refresh the Web browser and restart if necessary.
Content of Web browser incomplete or difficult to read	Not using optimum version of Web server.	1. Use the correct Web browser version → 🖹 78. 2. Clear the Web browser cache and restart the Web browser.
	Unsuitable view settings.	Change the font size/display ratio of the Web browser.
No or incomplete display of contents in the Web browser	▪ JavaScript not enabled ▪ JavaScript cannot be enabled	1. Enable JavaScript. 2. Enter http://XXX.XXX.X.XXX/basic.html as the IP address.
Operation with FieldCare or DeviceCare via CDI-RJ45 service interface (port 8000)	Firewall of computer or network is preventing communication	Depending on the settings of the firewall used on the computer or in the network, the firewall must be adapted or disabled to allow FieldCare/DeviceCare access.
Flashing of firmware with FieldCare or DeviceCare via CDI-RJ45 service interface (via port 8000 or TFTP ports)	Firewall of computer or network is preventing communication	Depending on the settings of the firewall used on the computer or in the network, the firewall must be adapted or disabled to allow FieldCare/DeviceCare access.

12.2 Diagnostic information via light emitting diodes

12.2.1 Transmitter

Proline 500 – digital

Different LEDs in the transmitter provide information on the device status.

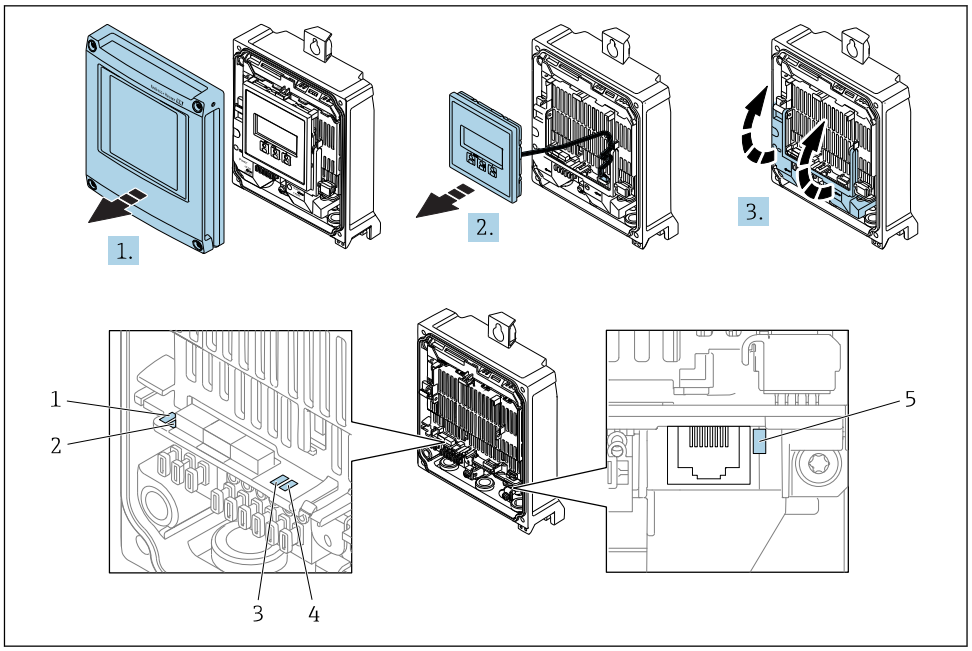

1 Supply voltage
2 Device status
3 Not used
4 Communication
5 Service interface (CDI) active

1. Open the housing cover.
2. Remove the display module.
3. Fold open the terminal cover.

LED		Color	Meaning
1	Supply voltage	Off	Supply voltage is off or too low.
		Green	Supply voltage is ok.
2	Device status (normal operation)	Off	Firmware error
		Green	Device status is ok.
		Flashing green	Device is not configured.
		Flashing red	A diagnostic event with "Warning" diagnostic behavior has occurred.
		Red	A diagnostic event with "Alarm" diagnostic behavior has occurred.
		Flashing red/green	The device restarts.
2	Device status (during start-up)	Flashes red slowly	If > 30 seconds: problem with the boot loader.
		Flashes red quickly	If > 30 seconds: compatibility problem when reading the firmware.
3	Not used	–	–
4	Communication	Off	Communication not active.
		White	Communication active.
5	Service interface (CDI)	Off	Not connected or no connection established.
		Yellow	Connected and connection established.
		Flashing yellow	Service interface active.

Proline 500

Different LEDs in the transmitter provide information on the device status.

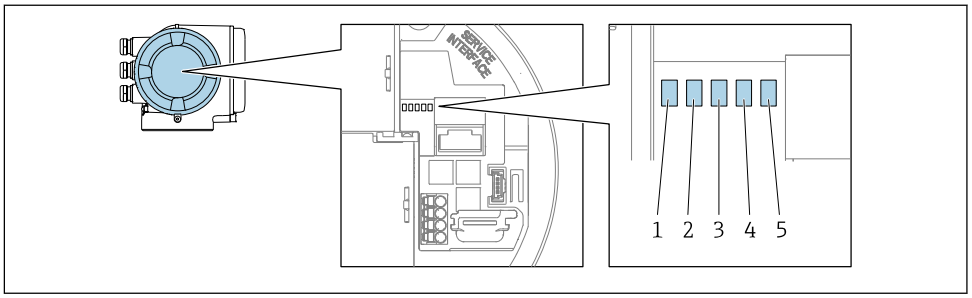

1 *Supply voltage*
2 *Device status*
3 *Not used*
4 *Communication*
5 *Service interface (CDI) active*

LED		Color	Meaning
1	Supply voltage	Off	Supply voltage is off or too low.
		Green	Supply voltage is ok.
2	Device status (normal operation)	Off	Firmware error
		Green	Device status is ok.
		Flashing green	Device is not configured.
		Red	A diagnostic event with "Alarm" diagnostic behavior has occurred.
		Flashing red	A diagnostic event with "Warning" diagnostic behavior has occurred.
		Flashing red/green	The device restarts.
2	Device status (during start-up)	Flashes red slowly	If > 30 seconds: problem with the boot loader.
		Flashes red quickly	If > 30 seconds: compatibility problem when reading the firmware.
3	Not used	–	–
4	Communication	Off	Communication not active.
		White	Communication active.
5	Service interface (CDI)	Off	Not connected or no connection established.
		Yellow	Connected and connection established.
		Flashing yellow	Service interface active.

12.2.2 Sensor connection housing

Proline 500 – digital

Various light emitting diodes (LED) on the ISEM electronics (Intelligent Sensor Electronic Module) in the sensor connection housing provide information on the device status.

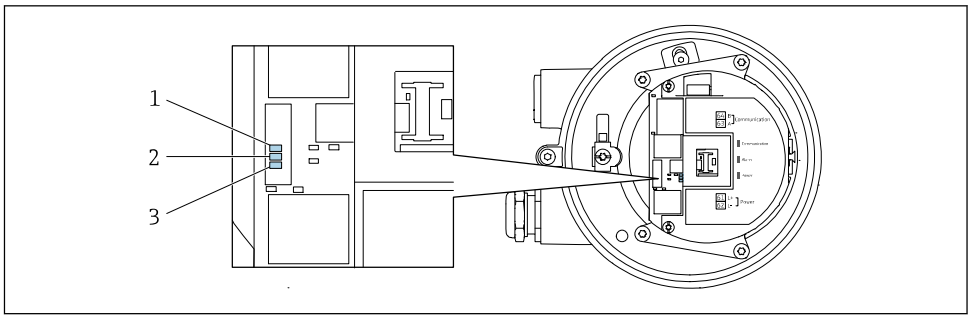

A0029699

1 Communication
2 Device status
3 Supply voltage

LED		Color	Meaning
1	Communication	White	Communication active.
2	Device status (normal operation)	Red	Problem
		Flashing red	Warning
2	Device status (during start-up)	Flashes red slowly	If > 30 seconds: problem with the boot loader.
		Flashes red quickly	If > 30 seconds: compatibility problem when reading the firmware.
3	Supply voltage	Green	Supply voltage is ok.
		Off	Supply voltage is off or too low.

12.3 Diagnostic information on local display

12.3.1 Diagnostic message

Faults detected by the self-monitoring system of the measuring device are displayed as a diagnostic message in alternation with the operational display.

Operational display in alarm condition	Diagnostic message

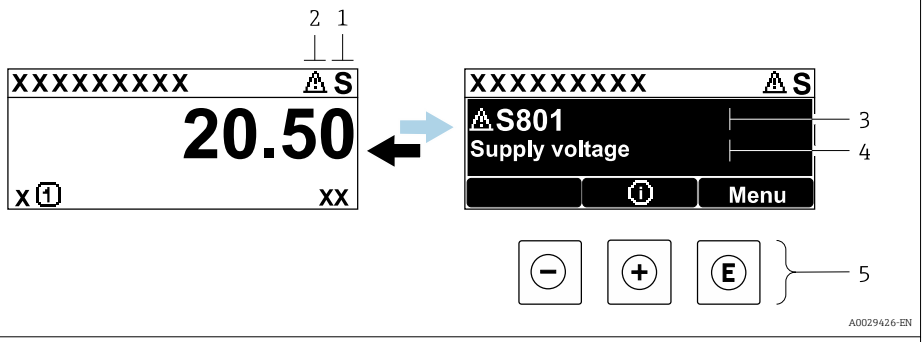

1 *Status signal*
2 *Diagnostic behavior*
3 *Diagnostic behavior with diagnostic code*
4 *Short text*
5 *Operating elements*

If two or more diagnostic events are pending simultaneously, only the message of the diagnostic event with the highest priority is shown.

Other diagnostic events that have occurred can be displayed in the **Diagnostics** menu:
- Via parameter → 164
- Via submenus → 165

Status signals

The status signals provide information on the state and reliability of the device by categorizing the cause of the diagnostic information (diagnostic event).

The status signals are categorized according to VDI/VDE 2650 and NAMUR Recommendation NE 107: F = Failure, C = Function Check, S = Out of Specification, M = Maintenance Required

Symbol	Meaning
F	**Failure** A device error has occurred. The measured value is no longer valid.
C	**Function check** The device is in service mode (e.g. during a simulation).
S	**Out of specification** The device is operated: ▪ Outside its technical specification limits (e.g. outside the process temperature range) ▪ Outside of the configuration carried out by the user (e.g. maximum flow in parameter **20 mA value**)
M	**Maintenance required** Maintenance is required. The measured value remains valid.

Diagnostic behavior

Symbol	Meaning
	**Alarm** ▪ Measurement is interrupted. ▪ Signal outputs and totalizers assume the defined alarm condition. ▪ A diagnostic message is generated.
	**Warning** Measurement is resumed. The signal outputs and totalizers are not affected. A diagnostic message is generated.

Diagnostic information

The fault can be identified using the diagnostic information. The short text helps you by providing information about the fault. In addition, the corresponding symbol for the diagnostic behavior is displayed in front of the diagnostic information on the local display.

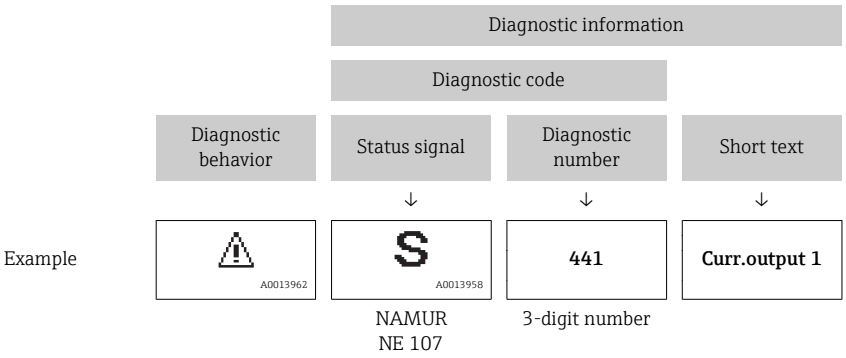

Operating elements

Key	Meaning
	**Plus key** *In a menu, submenu* Opens the message about remedy information.
	**Enter key** *In a menu, submenu* Opens the operating menu.

12.3.2 Calling up remedial measures

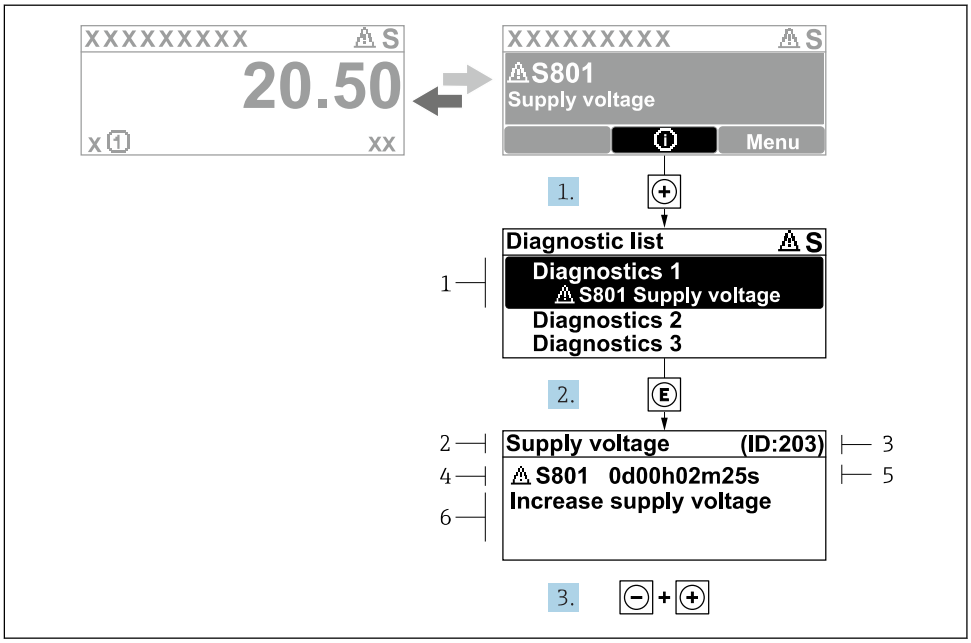

43 *Message about remedial measures*

1 *Diagnostic information*
2 *Short text*
3 *Service ID*
4 *Diagnostic behavior with diagnostic code*
5 *Operation time of occurrence*
6 *Remedial measures*

1. The user is in the diagnostic message.
   Press ⊞ (ⓘ symbol).
   ↳ The **Diagnostic list** submenu opens.
2. Select the desired diagnostic event with ⊞ or ⊟ and press Ⓔ .
   ↳ The message about the remedial measures opens.
3. Press ⊟ + ⊞ simultaneously.
   ↳ The message about the remedial measures closes.

The user is in the **Diagnostics** menu at an entry for a diagnostics event, e.g. in the **Diagnostic list** submenu or **Previous diagnostics** parameter.

1. Press Ⓔ.
   ↳ The message for the remedial measures for the selected diagnostic event opens.
2. Press ⊟ + ⊞ simultaneously.
   ↳ The message for the remedial measures closes.

12.4 Diagnostic information in the Web browser

12.4.1 Diagnostic options

Any faults detected by the measuring device are displayed in the Web browser on the home page once the user has logged on.

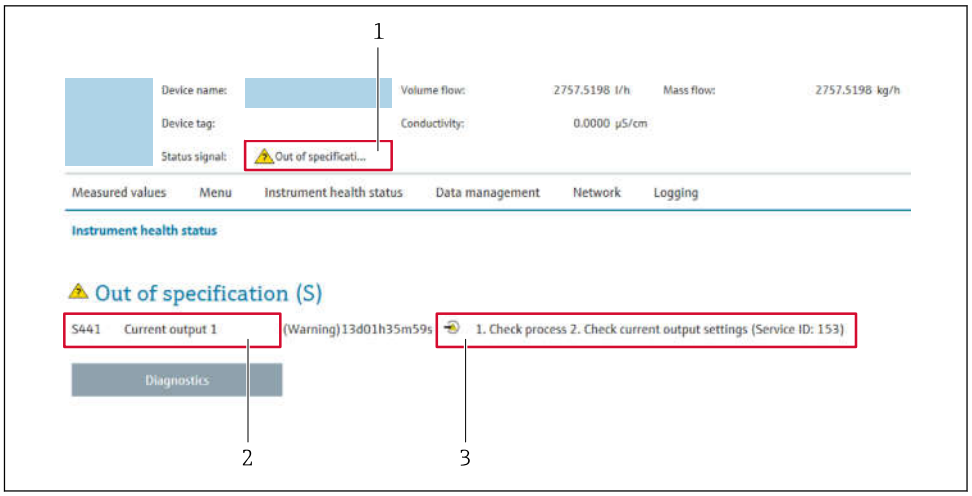

1 Status area with status signal
2 Diagnostic information
3 Remedy information with Service ID

In addition, diagnostic events which have occurred can be shown in the **Diagnostics** menu:
- Via parameter → 164
- Via submenu → 165

Status signals

The status signals provide information on the state and reliability of the device by categorizing the cause of the diagnostic information (diagnostic event).

Symbol	Meaning
	Failure A device error has occurred. The measured value is no longer valid.
	Function check The device is in service mode (e.g. during a simulation).
	Out of specification The device is operated: ▪ Outside its technical specification limits (e.g. outside the process temperature range) ▪ Outside of the configuration carried out by the user (e.g. maximum flow in parameter **20 mA value**)
	Maintenance required Maintenance is required. The measured value is still valid.

The status signals are categorized in accordance with VDI/VDE 2650 and NAMUR Recommendation NE 107.

12.4.2 Calling up remedy information

Remedy information is provided for every diagnostic event to ensure that problems can be rectified quickly. These measures are displayed in red along with the diagnostic event and the related diagnostic information.

12.5 Diagnostic information in FieldCare or DeviceCare

12.5.1 Diagnostic options

Any faults detected by the measuring device are displayed on the home page of the operating tool once the connection has been established.

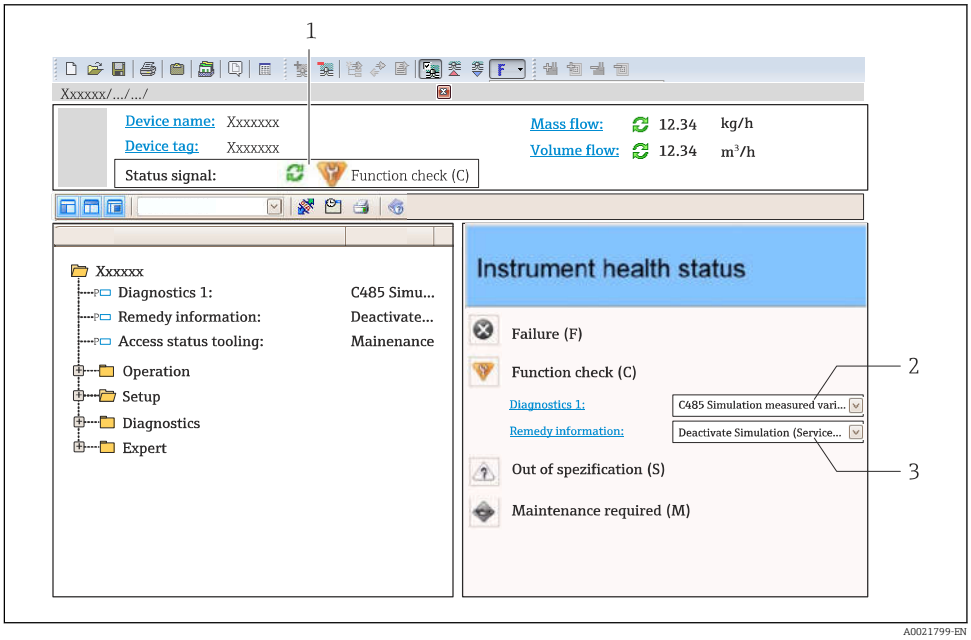

1 *Status area with status signal* → 🖹 *154*
2 *Diagnostic information* → 🖹 *155*
3 *Remedy information with Service ID*

In addition, diagnostic events which have occurred can be shown in the **Diagnostics** menu:
- Via parameter → 🖹 164
- Via submenu → 🖹 165

Diagnostic information

The fault can be identified using the diagnostic information. The short text helps you by providing information about the fault. In addition, the corresponding symbol for the diagnostic behavior is displayed in front of the diagnostic information on the local display.

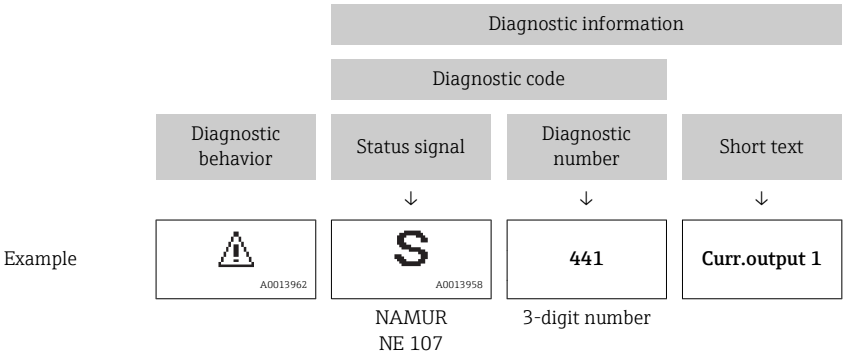

12.5.2 Calling up remedy information

Remedy information is provided for every diagnostic event to ensure that problems can be rectified quickly:
- On the home page
  Remedy information is displayed in a separate field below the diagnostics information.
- In the **Diagnostics** menu
  Remedy information can be called up in the working area of the user interface.

The user is in the **Diagnostics** menu.

1. Call up the desired parameter.
2. On the right in the working area, mouse over the parameter.
   ↳ A tool tip with remedy information for the diagnostic event appears.

12.6 Adapting the diagnostic information

12.6.1 Adapting the diagnostic behavior

Each item of diagnostic information is assigned a specific diagnostic behavior at the factory. The user can change this assignment for specific diagnostic information in the **Diagnostic behavior** submenu.

Expert → System → Diagnostic handling → Diagnostic behavior

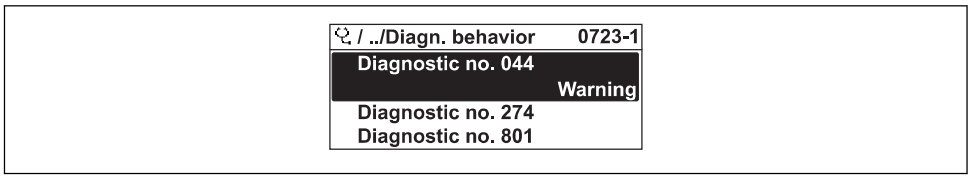

44 Taking the example of the local display

You can assign the following options to the diagnostic number as the diagnostic behavior:

Options	Description
Alarm	The device stops measurement. The signal outputs and totalizers assume the defined alarm condition. A diagnostic message is generated. The background lighting changes to red.
Warning	The device continues to measure. The signal outputs and totalizers are not affected. A diagnostic message is generated.
Logbook entry only	The device continues to measure. The diagnostic message is displayed only in the **Event logbook** submenu (**Event list** submenu) and is not displayed in alternation with the operational display.
Off	The diagnostic event is ignored, and no diagnostic message is generated or entered.

12.6.2 Adapting the status signal

Each item of diagnostic information is assigned a specific status signal at the factory. The user can change this assignment for specific diagnostic information in the **Diagnostic event category** submenu.

Expert → Communication → Diagnostic event category

Available status signals

Configuration as per HART 7 Specification (Condensed Status), in accordance with NAMUR NE107.

Symbol	Meaning
 A0013956	**Failure** A device error is present. The measured value is no longer valid.
 A0013959	**Function check** The device is in service mode (e.g. during a simulation).
 A0013958	**Out of specification** The device is being operated: ▪ Outside its technical specification limits (e.g. outside the process temperature range) ▪ Outside of the configuration carried out by the user (e.g. maximum flow in parameter **20 mA value**)
 A0013957	**Maintenance required** Maintenance is required. The measured value is still valid.
 A0023076	Has no effect on the condensed status.

12.7 Overview of diagnostic information

The amount of diagnostic information and the number of measured variables affected increase if the measuring device has one or more application packages.

In the case of some items of diagnostic information, the status signal and the diagnostic behavior can be changed. Change the diagnostic information → 159

Diagnostic number	Short text	Remedy instructions	Status signal [from the factory]	Diagnostic behavior [from the factory]
Diagnostic of sensor				
043	Sensor short circuit	1. Check sensor cable and sensor 2. Execute Heartbeat Verification 3. Replace sensor cable or sensor	S	Warning [1]
082	Data storage	1. Check module connections 2. Contact service	F	Alarm
083	Memory content	1. Restart device 2. Restore HistoROM S-DAT backup ('Device reset' parameter) 3. Replace HistoROM S-DAT	F	Alarm
168	Coating detected	Clean measuring tube	M	Warning
169	Conductivity measurement failed	1. Check grounding conditions 2. Deactivate conductivity measurement	M	Warning
170	Coil resistance	Check ambient and process temperature	F	Alarm
180	Temperature sensor defective	1. Check sensor connections 2. Replace sensor cable or sensor 3. Turn off temperature measurement	F	Warning
181	Sensor connection	1. Check sensor cable and sensor 2. Execute Heartbeat Verification 3. Replace sensor cable or sensor	F	Alarm

Diagnostic number	Short text	Remedy instructions	Status signal [from the factory]	Diagnostic behavior [from the factory]
Diagnostic of electronic				
201	Device failure	1. Restart device 2. Contact service	F	Alarm
242	Software incompatible	1. Check software 2. Flash or change main electronics module	F	Alarm
252	Modules incompatible	1. Check electronic modules 2. Check if correct modules are available (e.g. NEx, Ex) 3. Replace electronic modules	F	Alarm
252	Modules incompatible	1. Check if correct electronic modul is plugged 2. Replace electronic module	F	Alarm
262	Sensor electronic connection faulty	1. Check or replace connection cable between sensor electronic module (ISEM) and main electronics 2. Check or replace ISEM or main electronics	F	Alarm
270	Main electronic failure	Change main electronic module	F	Alarm
271	Main electronic failure	1. Restart device 2. Change main electronic module	F	Alarm
272	Main electronic failure	1. Restart device 2. Contact service	F	Alarm
273	Main electronic failure	Change electronic	F	Alarm
275	I/O module 1 to n defective	Change I/O module	F	Alarm
276	I/O module 1 to n faulty	1. Restart device 2. Change I/O module	F	Alarm
283	Memory content	1. Reset device 2. Contact service	F	Alarm
302	Device verification active	Device verification active, please wait.	C	Warning
303	I/O 1 to n configuration changed	1. Apply I/O module configuration (parameter 'Apply I/O configuration') 2. Afterwards reload device description and check wiring	M	Warning
311	Electronic failure	1. Do not reset device 2. Contact service	M	Warning
332	Writing in HistoROM backup failed	Replace user interface board Ex d/XP: replace transmitter	F	Alarm
361	I/O module 1 to n faulty	1. Restart device 2. Check electronic modules 3. Change I/O Modul or main electronics	F	Alarm
372	Sensor electronic (ISEM) faulty	1. Restart device 2. Check if failure recurs 3. Replace sensor electronic module (ISEM)	F	Alarm
373	Sensor electronic (ISEM) faulty	1. Transfer data or reset device 2. Contact service	F	Alarm

Diagnostic number	Short text	Remedy instructions	Status signal [from the factory]	Diagnostic behavior [from the factory]
375	I/O- 1 to n communication failed	1. Restart device 2. Check if failure recurs 3. Replace module rack inclusive electronic modules	F	Alarm
376	Sensor electronic (ISEM) faulty	1. Replace sensor electronic module (ISEM) 2. Turn off diagnostic message	S	Warning [1)]
377	Sensor electronic (ISEM) faulty	1. Activate empty pipe detection 2. Check partial filled pipe and installation direction 3. Check sensor cabling 4. Deactivate diagnostic 377	S	Warning [1)]
378	Supply voltage ISEM faulty	Check supply voltage to the ISEM	F	Alarm
382	Data storage	1. Insert T-DAT 2. Replace T-DAT	F	Alarm
383	Memory content	1. Restart device 2. Delete T-DAT via 'Reset device' parameter 3. Replace T-DAT	F	Alarm
387	HistoROM data faulty	Contact service organization	F	Alarm
512	Sensor electronic (ISEM) faulty	1. Check ECC recovery time 2. Turn off ECC	F	Alarm
Diagnostic of configuration				
330	Flash file invalid	1. Update firmware of device 2. Restart device	M	Warning
331	Firmware update failed	1. Update firmware of device 2. Restart device	F	Warning
410	Data transfer	1. Check connection 2. Retry data transfer	F	Alarm
412	Processing download	Download active, please wait	C	Warning
431	Trim 1 to n	Carry out trim	C	Warning
437	Configuration incompatible	1. Restart device 2. Contact service	F	Alarm
438	Dataset	1. Check data set file 2. Check device configuration 3. Up- and download new configuration	M	Warning
441	Current output 1 to n	1. Check process 2. Check current output settings	S	Warning [1)]
442	Frequency output 1 to n	1. Check process 2. Check frequency output settings	S	Warning [1)]
443	Pulse output 1 to n	1. Check process 2. Check pulse output settings	S	Warning [1)]
444	Current input 1 to n	1. Check process 2. Check current input settings	S	Warning [1)]
453	Flow override	Deactivate flow override	C	Warning
484	Failure mode simulation	Deactivate simulation	C	Alarm
485	Measured variable simulation	Deactivate simulation	C	Warning

Diagnostic number	Short text	Remedy instructions	Status signal [from the factory]	Diagnostic behavior [from the factory]
486	Current input 1 to n simulation	Deactivate simulation	C	Warning
491	Current output 1 to n simulation	Deactivate simulation	C	Warning
492	Simulation frequency output 1 to n	Deactivate simulation frequency output	C	Warning
493	Simulation pulse output 1 to n	Deactivate simulation pulse output	C	Warning
494	Switch output simulation 1 to n	Deactivate simulation switch output	C	Warning
495	Diagnostic event simulation	Deactivate simulation	C	Warning
496	Status input simulation	Deactivate simulation status input	C	Warning
502	CT activation/ deactivation failed	Follow the sequence of the custody transfer activation/deactivation: First authorized user login, then set the DIP switch on the main electonic module	C	Warning
511	ISEM settings faulty	1. Check measuring period and integration time 2. Check sensor properties	C	Alarm
520	I/O 1 to n hardware configuration invalid	1. Check I/O hardware configuration 2. Replace wrong I/O module 3. Plug the module of double pulse output on correct slot	F	Alarm
530	Electrode cleaning is running	Turn off ECC	C	Warning
531	Empty pipe adjustment faulty	Execute EPD adjustment	S	Warning [1)]
537	Configuration	1. Check IP addresses in network 2. Change IP address	F	Warning
540	Custody transfer mode failed	1. Power off device and toggle DIP switch 2. Deactivate custody transfer mode 3. Reactivate custody transfer mode 4. Check electronic components	F	Alarm
543	Double pulse output	1. Check process 2. Check pulse output settings	S	Warning [1)]
593	Double pulse output simulation	Deactivate simulation pulse output	C	Warning
594	Relay output simulation	Deactivate simulation switch output	C	Warning
599	Custody transfer logbook full	1. Deactivate custody transfer mode 2. Clear custody transfer logbook (all 30 entries) 3. Activate custody transfer mode	F	Warning
Diagnostic of process				
803	Current loop	1. Check wiring 2. Change I/O module	F	Alarm
832	Electronic temperature too high	Reduce ambient temperature	S	Warning [1)]
833	Electronic temperature too low	Increase ambient temperature	S	Warning [1)]

Diagnostic number	Short text	Remedy instructions	Status signal [from the factory]	Diagnostic behavior [from the factory]
834	Process temperature too high	Reduce process temperature	S	Warning [1]
835	Process temperature too low	Increase process temperature	S	Warning [1]
842	Process limit	Low flow cut off active! 1. Check low flow cut off configuration	S	Warning [1]
882	Input signal	1. Check input configuration 2. Check external device or process conditions	F	Alarm
937	Sensor symmetry	1. Eliminate external magnetic field near sensor 2. Turn off diagnostic message	S	Warning [1]
938	EMC interference	1. Check ambient conditions regarding EMC influence 2. Turn off diagnostic message	F	Alarm [1]
961	Electrode potential out of specification	1. Check process conditions 2. Check ambient conditions	S	Warning [1]
962	Pipe empty	1. Perform full pipe adjustment 2. Perform empty pipe adjustment 3. Turn off empty pipe detection	S	Warning [1]

1) Diagnostic behavior can be changed.

12.8 Pending diagnostic events

The **Diagnostics** menu allows the user to view the current diagnostic event and the previous diagnostic event separately.

To call up the measures to rectify a diagnostic event:
- Via local display → 156
- Via Web browser → 157
- Via "FieldCare" operating tool → 159
- Via "DeviceCare" operating tool → 159

Other pending diagnostic events can be displayed in the **Diagnostic list** submenu → 165

Navigation
"Diagnostics" menu

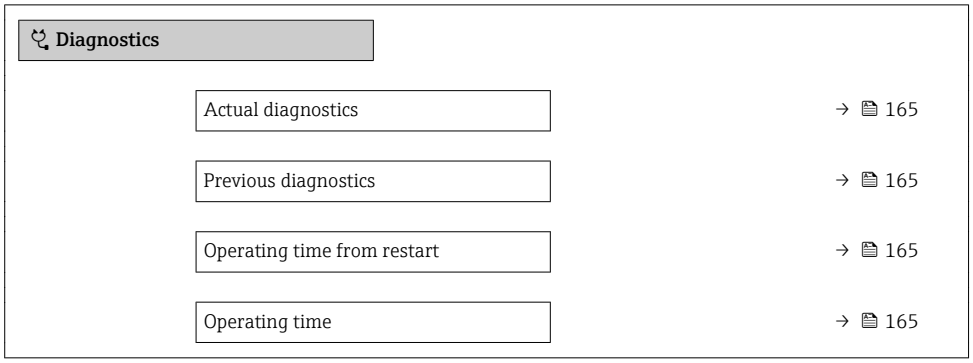

Parameter overview with brief description

Parameter	Prerequisite	Description	User interface
Actual diagnostics	A diagnostic event has occurred.	Shows the current occured diagnostic event along with its diagnostic information. If two or more messages occur simultaneously, the message with the highest priority is shown on the display.	Symbol for diagnostic behavior, diagnostic code and short message.
Previous diagnostics	Two diagnostic events have already occurred.	Shows the diagnostic event that occurred prior to the current diagnostic event along with its diagnostic information.	Symbol for diagnostic behavior, diagnostic code and short message.
Operating time from restart	–	Shows the time the device has been in operation since the last device restart.	Days (d), hours (h), minutes (m) and seconds (s)
Operating time	–	Indicates how long the device has been in operation.	Days (d), hours (h), minutes (m) and seconds (s)

12.9 Diagnostic list

Up to 5 currently pending diagnostic events can be displayed in the **Diagnostic list** submenu along with the associated diagnostic information. If more than 5 diagnostic events are pending, the events with the highest priority are shown on the display.

Navigation path
Diagnostics → Diagnostic list

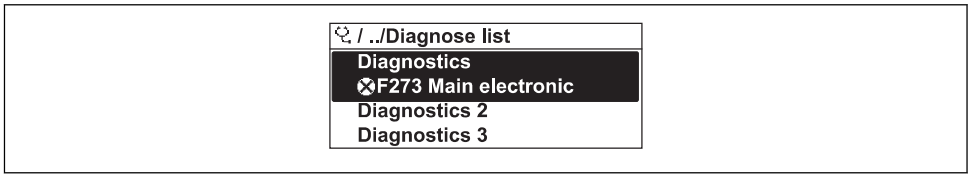

45 *Taking the example of the local display*

To call up the measures to rectify a diagnostic event:
- Via local display → 156
- Via Web browser → 157
- Via "FieldCare" operating tool → 159
- Via "DeviceCare" operating tool → 159

12.10 Event logbook

12.10.1 Reading out the event logbook

A chronological overview of the event messages that have occurred is provided in the **Events list** submenu.

Navigation path
Diagnostics menu → **Event logbook** submenu → Event list

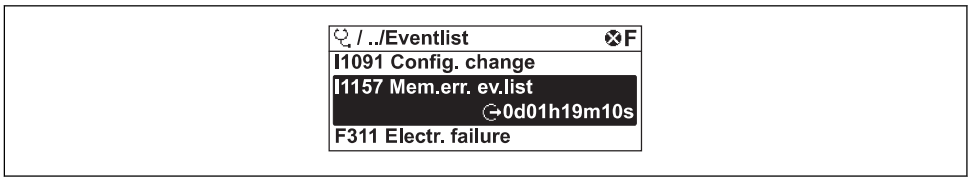

46 *Taking the example of the local display*

- A maximum of 20 event messages can be displayed in chronological order.
- If the **Extended HistoROM** application package (order option) is enabled in the device, the event list can contain up to 100 entries .

The event history includes entries for:
- Diagnostic events → 160
- Information events → 166

In addition to the operation time of its occurrence, each event is also assigned a symbol that indicates whether the event has occurred or is ended:
- Diagnostic event
  - : Occurrence of the event
  - : End of the event
- Information event
  : Occurrence of the event

To call up the measures to rectify a diagnostic event:
- Via local display → 156
- Via Web browser → 157
- Via "FieldCare" operating tool → 159
- Via "DeviceCare" operating tool → 159

For filtering the displayed event messages → 166

12.10.2 Filtering the event logbook

Using the **Filter options** parameter you can define which category of event message is displayed in the **Events list** submenu.

Navigation path
Diagnostics → Event logbook → Filter options

Filter categories
- All
- Failure (F)
- Function check (C)
- Out of specification (S)
- Maintenance required (M)
- Information (I)

12.10.3 Overview of information events

Unlike a diagnostic event, an information event is displayed in the event logbook only and not in the diagnostic list.

Info number	Info name
I1000	--------(Device ok)
I1079	Sensor changed
I1089	Power on
I1090	Configuration reset
I1091	Configuration changed

Info number	Info name
I1092	HistoROM backup deleted
I1137	Electronic changed
I1151	History reset
I1155	Reset electronic temperature
I1156	Memory error trend
I1157	Memory error event list
I1256	Display: access status changed
I1264	Safety sequence aborted
I1278	I/O module restarted
I1335	Firmware changed
I1351	Empty pipe detection adjustment failure
I1353	Empty pipe detection adjustment ok
I1361	Web server: login failed
I1397	Fieldbus: access status changed
I1398	CDI: access status changed
I1443	Coating thickness not determined
I1444	Device verification passed
I1445	Device verification failed
I1457	Measurement error verification failed
I1459	I/O module verification failed
I1461	Sensor verification failed
I1462	Sensor electronic module verific. failed
I1512	Download started
I1513	Download finished
I1514	Upload started
I1515	Upload finished
I1517	Custody transfer active
I1518	Custody transfer inactive
I1554	Safety sequence started
I1555	Safety sequence confirmed
I1556	Safety mode off
I1618	I/O module 2 replaced
I1619	I/O module 3 replaced
I1621	I/O module 4 replaced
I1622	Calibration changed
I1624	Reset all totalizers
I1625	Write protection activated
I1626	Write protection deactivated
I1627	Web server: login successful
I1628	Display: login successful
I1629	CDI: login successful
I1631	Web server access changed
I1632	Display: login failed

Info number	Info name
I1633	CDI: login failed
I1634	Reset to factory settings
I1635	Reset to delivery settings
I1639	Max. switch cycles number reached
I1643	Custody transfer logbook cleared
I1649	Hardware write protection activated
I1650	Hardware write protection deactivated
I1651	Custody transfer parameter changed
I1712	New flash file received
I1725	Sensor electronic module (ISEM) changed
I1726	Configuration backup failed

12.11 Resetting the measuring device

Using the**Device reset** parameter (→ 131) it is possible to reset the entire device configuration or some of the configuration to a defined state.

12.11.1 Function scope of the "Device reset" parameter

Options	Description
Cancel	No action is executed and the user exits the parameter.
To delivery settings	Every parameter for which a customer-specific default setting was ordered is reset to this customer-specific value. All other parameters are reset to the factory setting.
Restart device	The restart resets every parameter whose data are in the volatile memory (RAM) to the factory setting (e.g. measured value data). The device configuration remains unchanged.
Restore S-DAT backup	Restore the data that are saved on the S-DAT. The data record is restored from the electronics memory to the S-DAT. This option is displayed only in an alarm condition.

12.12 Device information

The **Device information** submenu contains all parameters that display different information for device identification.

Navigation
"Diagnostics" menu → Device information

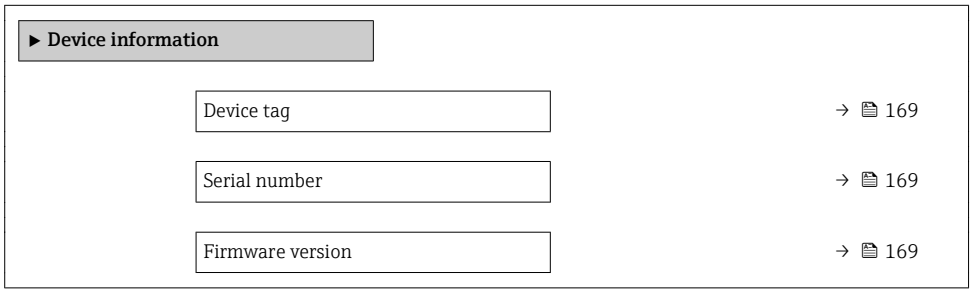

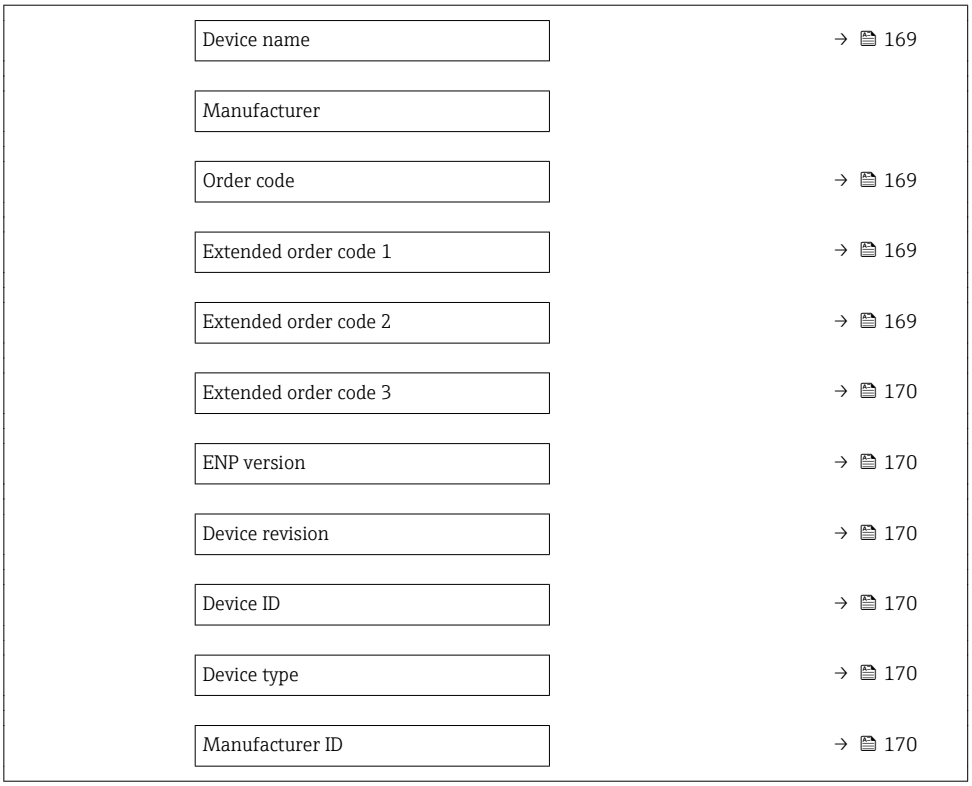

Parameter overview with brief description

Parameter	Description	User interface	Factory setting
Device tag	Shows name of measuring point.	Max. 32 characters, such as letters, numbers or special characters (e.g. @, %, /).	Promag
Serial number	Shows the serial number of the measuring device.	Max. 11-digit character string comprising letters and numbers.	–
Firmware version	Shows the device firmware version installed.	Character string in the format xx.yy.zz	–
Device name	Shows the name of the transmitter. The name can be found on the nameplate of the transmitter.	Promag 300/500	–
Order code	Shows the device order code. The order code can be found on the nameplate of the sensor and transmitter in the "Order code" field.	Character string composed of letters, numbers and certain punctuation marks (e.g. /).	–
Extended order code 1	Shows the 1st part of the extended order code. The extended order code can also be found on the nameplate of the sensor and transmitter in the "Ext. ord. cd." field.	Character string	–
Extended order code 2	Shows the 2nd part of the extended order code. The extended order code can also be found on the nameplate of the sensor and transmitter in the "Ext. ord. cd." field.	Character string	–

Parameter	Description	User interface	Factory setting
Extended order code 3	Shows the 3rd part of the extended order code. The extended order code can also be found on the nameplate of the sensor and transmitter in the "Ext. ord. cd." field.	Character string	–
ENP version	Shows the version of the electronic nameplate (ENP).	Character string	2.02.00
Device revision	Shows the device revision with which the device is registered with the HART Communication Foundation.	2-digit hexadecimal number	6
Device ID	Shows the device ID for identifying the device in a HART network.	6-digit hexadecimal number	–
Device type	Shows the device type with which the measuring device is registered with the HART Communication Foundation.	2-digit hexadecimal number	0x3A (for Promag 500)
Manufacturer ID	Shows the manufacturer ID device is registered with the HART Communication Foundation.	2-digit hexadecimal number	0x11 (for Endress+Hauser)

12.13 Firmware history

Release date	Firmware version	Order code for "Firmware version"	Firmware changes	Documentation type	Documentation
09.2019	01.05.zz	Option **64**	Various improvements	Operating Instructions	BA01399D/06/EN/02.19

10.2017	01.01.zz	Option **68**	▪ OPC-UA with Security new
			▪ Local display - enhanced performance and data entry via text editor
			▪ Optimized keypad lock for local display
			▪ Web server feature update
			  ▪ Support for trend data function
			  ▪ Heartbeat function enhanced to include detailed results (page 3/4 of the report)
			  ▪ Device configuration as PDF (parameter log, similar to FDT print)
			▪ Network capability of Ethernet (service) interface
			▪ Comprehensive Heartbeat feature update
			▪ Local display - support for WLAN infrastructure mode
			▪ Implementation of reset code
				Operating Instructions	BA01399D/06/EN/02.17

08.2016	01.00.zz	Option **76**	Original firmware	Operating Instructions	BA01399D/06/EN/01.16

It is possible to flash the firmware to the current version or the previous version using the service interface. For the compatibility of the firmware version, see the "Device history and compatibility" section → 172

For the compatibility of the firmware version with the previous version, the installed device description files and operating tools, observe the information about the device in the "Manufacturer's information" document.

The manufacturer's information is available:
- In the Download Area of the Endress+Hauser web site: www.endress.com → Downloads

- Specify the following details:
  - Product root: e.g. 5P5B
    The product root is the first part of the order code: see the nameplate on the device.
  - Text search: Manufacturer's information
  - Media type: Documentation – Technical Documentation

12.14 Device history and compatibility

The device model is documented in the order code on the nameplate of the device (e.g. 8F3BXX-XXX....XXXA1-XXXXXX).

Device model	Release	Change compared with earlier model	Compatibility with earlier model
A2	09.2019	I/O module with enhanced performance and functionality: see device firmware 01.05.zz → 🖹 171	No
A1	08.2016	–	–

13 Maintenance

13.1 Maintenance tasks

No special maintenance work is required.

13.1.1 Exterior cleaning

When cleaning the exterior of measuring devices, always use cleaning agents that do not attack the surface of the housing or the seals.

13.1.2 Interior cleaning

No interior cleaning is planned for the device.

13.1.3 Replacing seals

The sensor's seals (particularly aseptic molded seals) must be replaced periodically.

The interval between changes depends on the frequency of the cleaning cycles, the cleaning temperature and the medium temperature.

Replacement seals (accessory part) → 207

13.2 Measuring and test equipment

Endress+Hauser offers a wide variety of measuring and test equipment, such as W@M or device tests.

Your Endress+Hauser Sales Center can provide detailed information on the services.

List of some of the measuring and testing equipment: → 176

13.3 Endress+Hauser services

Endress+Hauser offers a wide variety of services for maintenance such as recalibration, maintenance service or device tests.

Your Endress+Hauser Sales Center can provide detailed information on the services.

14 Repair

14.1 General notes

14.1.1 Repair and conversion concept

The Endress+Hauser repair and conversion concept provides for the following:
- The measuring devices have a modular design.
- Spare parts are grouped into logical kits with the associated Installation Instructions.
- Repairs are carried out by Endress+Hauser Service or by appropriately trained customers.
- Certified devices can only be converted to other certified devices by Endress+Hauser Service or at the factory.

14.1.2 Notes for repair and conversion

For repair and modification of a measuring device, observe the following notes:
- ▶ Use only original Endress+Hauser spare parts.
- ▶ Carry out the repair according to the Installation Instructions.
- ▶ Observe the applicable standards, federal/national regulations, Ex documentation (XA) and certificates.
- ▶ Document every repair and each conversion and enter them into the *W@M* life cycle management database.

14.2 Spare parts

Measuring device serial number:
Can be read out via the **Serial number** parameter (→ 169) in the **Device information** submenu.

14.3 Endress+Hauser services

Endress+Hauser offers a wide range of services.

Your Endress+Hauser Sales Center can provide detailed information on the services.

14.4 Return

The requirements for safe device return can vary depending on the device type and national legislation.

1. Refer to the website for more information:
   http://www.endress.com/support/return-material
2. Return the device if repairs or a factory calibration are required, or if the wrong device was ordered or delivered.

14.5 Disposal

14.5.1 Removing the measuring device

1. Switch off the device.

⚠ WARNING

Danger to persons from process conditions.

- Beware of hazardous process conditions such as pressure in the measuring device, high temperatures or aggressive fluids.

2. Carry out the mounting and connection steps from the "Mounting the measuring device" and "Connecting the measuring device" sections in reverse order. Observe the safety instructions.

14.5.2 Disposing of the measuring device

⚠ WARNING

Danger to personnel and environment from fluids that are hazardous to health.

- Ensure that the measuring device and all cavities are free of fluid residues that are hazardous to health or the environment, e.g. substances that have permeated into crevices or diffused through plastic.

Observe the following notes during disposal:

- Observe valid federal/national regulations.
- Ensure proper separation and reuse of the device components.

15 Accessories

Various accessories, which can be ordered with the device or subsequently from Endress +Hauser, are available for the device. Detailed information on the order code in question is available from your local Endress+Hauser sales center or on the product page of the Endress+Hauser website: www.endress.com.

15.1 Device-specific accessories

15.1.1 For the transmitter

Accessories	Description
Transmitter ▪ Proline 500 – digital ▪ Proline 500	Transmitter for replacement or storage. Use the order code to define the following specifications: ▪ Approvals ▪ Output ▪ Input ▪ Display/operation ▪ Housing ▪ Software ▪ Proline 500 – digital transmitter: Order code: 5X5BXX-*********A ▪ Proline 500 transmitter: Order code: 5X5BXX-*********B Proline 500 transmitter for replacement: It is essential to specify the serial number of the current transmitter when ordering. Based on the serial number, the device-specific data (e.g., calibration factors) of the replacement device can be used for the new transmitter. ▪ Proline 500 – digital transmitter: Installation Instructions EA01151D ▪ Proline 500 transmitter: Installation Instructions EA01152D
External WLAN antenna	External WLAN antenna with 1.5 m (59.1 in) connecting cable and two angle brackets. Order code for "Accessory enclosed", option P8 "Wireless antenna wide area". ▪ The external WLAN antenna is not suitable for use in hygienic applications. ▪ Further information on the WLAN interface → 🖹 86. Order number: 71351317 Installation Instructions EA01238D
Pipe mounting set	Pipe mounting set for transmitter. Proline 500 – digital transmitter Order number: 71346427 Installation Instructions EA01195D Proline 500 transmitter Order number: 71346428
Protective cover Transmitter ▪ Proline 500 – digital ▪ Proline 500	Is used to protect the measuring device from the effects of the weather: e.g. rainwater, excess heating from direct sunlight. ▪ Proline 500 – digital transmitter Order number: 71343504 ▪ Proline 500 transmitter Order number: 71343505 Installation Instructions EA01191D

Display guard Proline 500 – digital	Is used to protect the display against impact or scoring from sand in desert areas. Order number: 71228792 Installation Instructions EA01093D
Ground cable	Set, consisting of two ground cables for potential equalization.
Connecting cable Proline 500 – digital Sensor – Transmitter	The connecting cable can be ordered directly with the measuring device (order code for "Cable, sensor connection) or as an accessory (order number DK5012). The following cable lengths are available: order code for "Cable, sensor connection" ▪ Option B: 20 m (65 ft) ▪ Option E: User configurable up to max. 50 m ▪ Option F: User configurable up to max. 165 ft Maximum possible cable length for a Proline 500 – digital connecting cable: 300 m (1000 ft)
Connecting cable Proline 500 Sensor – Transmitter	The connecting cable can be ordered directly with the measuring device (order code for "Cable, sensor connection) or as an accessory (order number DK5012). The following cable lengths are available: order code for "Cable, sensor connection" ▪ Option 1: 5 m (16 ft) ▪ Option 2: 10 m (32 ft) ▪ Option 3: 20 m (65 ft) ▪ Option 4: User configurable cable length (m) ▪ Option 5: User configurable cable length (ft) Reinforced connecting cable with an additional, reinforcing metal braid: ▪ Option 6: User configurable cable length (m) ▪ Option 7: User configurable cable length (ft) Possible cable length for a Proline 500 connecting cable: depends on the medium conductivity, max. 200 m (660 ft)

15.1.2 For the sensor

Accessories	Description
Ground disks	Are used to ground the medium in lined measuring tubes to ensure proper measurement. For details, see Installation Instructions EA00070D

15.2 Communication-specific accessories

Accessories	Description
Commubox FXA195 HART	For intrinsically safe HART communication with FieldCare via the USB interface. Technical Information TI00404F
HART Loop Converter HMX50	Is used to evaluate and convert dynamic HART process variables to analog current signals or limit values. ▪ Technical Information TI00429F ▪ Operating Instructions BA00371F
Fieldgate FXA320	Gateway for the remote monitoring of connected 4-20 mA measuring devices via a Web browser. Technical Information TI00025S Operating Instructions BA00053S
Fieldgate FXA520	Gateway for the remote diagnostics and remote configuration of connected HART measuring devices via a Web browser. Technical Information TI00025S Operating Instructions BA00051S

Field Xpert SFX350	Field Xpert SFX350 is a mobile computer for commissioning and maintenance. It enables efficient device configuration and diagnostics for HART devices and can be used in non-hazardous areas. Operating Instructions BA01202S
Field Xpert SFX370	Field Xpert SFX370 is a mobile computer for commissioning and maintenance. It enables efficient device configuration and diagnostics for HART devices and can be used in the non-hazardous area and in the hazardous area. Operating Instructions BA01202S
Field Xpert SMT70	The Field Xpert SMT70 tablet PC for device configuration enables mobile plant asset management in hazardous and non-hazardous areas. It is suitable for commissioning and maintenance staff to manage field instruments with a digital communication interface and to record progress. This tablet PC is designed as an all-in-one solution with a preinstalled driver library and is an easy-to-use, touch-sensitive tool which can be used to manage field instruments throughout their entire life cycle. ▪ Technical Information TI01342S ▪ Operating Instructions BA01709S ▪ Product page: www.endress.com/smt70

15.3 Service-specific accessories

Accessories	Description
Applicator	Software for selecting and sizing Endress+Hauser measuring devices: ▪ Choice of measuring devices for industrial requirements ▪ Calculation of all the necessary data for identifying the optimum flowmeter: e.g. nominal diameter, pressure loss, flow velocity and accuracy. ▪ Graphic illustration of the calculation results ▪ Determination of the partial order code, administration, documentation and access to all project-related data and parameters over the entire life cycle of a project. Applicator is available: ▪ Via the Internet: https://portal.endress.com/webapp/applicator ▪ As a downloadable DVD for local PC installation.
W@M	W@M Life Cycle Management Improved productivity with information at your fingertips. Data relevant to a plant and its components is generated from the first stages of planning and during the asset's complete life cycle. W@M Life Cycle Management is an open and flexible information platform with online and on-site tools. Instant access for your staff to current, in-depth data shortens your plant's engineering time, speeds up procurement processes and increases plant uptime. Combined with the right services, W@M Life Cycle Management boosts productivity in every phase. For more information, visit www.endress.com/lifecyclemanagement
FieldCare	FDT-based plant asset management tool from Endress+Hauser. It can configure all smart field units in your system and helps you manage them. By using the status information, it is also a simple but effective way of checking their status and condition. Operating Instructions BA00027S and BA00059S
DeviceCare	Tool to connect and configure Endress+Hauser field devices. Innovation brochure IN01047S

15.4 System components

Accessories	Description
Memograph M graphic data manager	The Memograph M graphic data manager provides information on all the relevant measured variables. Measured values are recorded correctly, limit values are monitored and measuring points analyzed. The data are stored in the 256 MB internal memory and also on a SD card or USB stick. ▪ Technical Information TI00133R ▪ Operating Instructions BA00247R

16 Technical data

16.1 Application

The measuring device is only suitable for flow measurement of liquids with a minimum conductivity of 5 µS/cm.

Depending on the version ordered, the measuring device can also measure potentially explosive, flammable, poisonous and oxidizing media.

To ensure that the device remains in proper operating condition for its service life, use the measuring device only for media against which the process-wetted materials are sufficiently resistant.

16.2 Function and system design

Measuring principle

Electromagnetic flow measurement on the basis of *Faraday's law of magnetic induction*.

Measuring system

The measuring system consists of a transmitter and a sensor. The transmitter and sensor are mounted in physically separate locations. They are interconnected by connecting cables.

For information on the structure of the device → 14

16.3 Input

Measured variable

Direct measured variables

- Volume flow (proportional to induced voltage)
- Electrical conductivity

Calculated measured variables

- Mass flow
- Corrected volume flow

Measuring range

Typically v = 0.01 to 10 m/s (0.03 to 33 ft/s) with the specified accuracy

Flow characteristic values in SI units: DN 15 to 125 (½ to 4")

Nominal diameter		Recommended flow	Factory settings		
		min./max. full scale value (v ~ 0.3/10 m/s)	Full scale value current output (v ~ 2.5 m/s)	Pulse value (~ 2 pulse/s)	Low flow cut off (v ~ 0.04 m/s)
[mm]	[in]	[dm³/min]	[dm³/min]	[dm³]	[dm³/min]
15	½	4 to 100	25	0.2	0.5
25	1	9 to 300	75	0.5	1
32	–	15 to 500	125	1	2
40	1 ½	25 to 700	200	1.5	3
50	2	35 to 1 100	300	2.5	5
65	–	60 to 2 000	500	5	8

Nominal diameter		Recommended flow	Factory settings		
		min./max. full scale value (v ~ 0.3/10 m/s)	Full scale value current output (v ~ 2.5 m/s)	Pulse value (~ 2 pulse/s)	Low flow cut off (v ~ 0.04 m/s)
[mm]	[in]	[dm³/min]	[dm³/min]	[dm³]	[dm³/min]
80	3	90 to 3 000	750	5	12
100	4	145 to 4 700	1200	10	20
125	–	220 to 7 500	1850	15	30

Flow characteristic values in SI units: DN 150 to 600 (6 to 24")

Nominal diameter		Recommended flow	Factory settings		
		min./max. full scale value (v ~ 0.3/10 m/s)	Full scale value current output (v ~ 2.5 m/s)	Pulse value (~ 2 pulse/s)	Low flow cut off (v ~ 0.04 m/s)
[mm]	[in]	[m³/h]	[m³/h]	[m³]	[m³/h]
150	6	20 to 600	150	0.03	2.5
200	8	35 to 1 100	300	0.05	5
250	10	55 to 1 700	500	0.05	7.5
300	12	80 to 2 400	750	0.1	10
350	14	110 to 3 300	1 000	0.1	15
400	16	140 to 4 200	1 200	0.15	20
450	18	180 to 5 400	1 500	0.25	25
500	20	220 to 6 600	2 000	0.25	30
600	24	310 to 9 600	2 500	0.3	40

Flow characteristic values in US units: ½ - 24" (DN 15 - 600)

Nominal diameter		Recommended flow	Factory settings		
		min./max. full scale value (v ~ 0.3/10 m/s)	Full scale value current output (v ~ 2.5 m/s)	Pulse value (~ 2 pulse/s)	Low flow cut off (v ~ 0.04 m/s)
[in]	[mm]	[gal/min]	[gal/min]	[gal]	[gal/min]
½	15	1.0 to 27	6	0.1	0.15
1	25	2.5 to 80	18	0.2	0.25
1 ½	40	7 to 190	50	0.5	0.75
2	50	10 to 300	75	0.5	1.25
3	80	24 to 800	200	2	2.5
4	100	40 to 1 250	300	2	4
6	150	90 to 2 650	600	5	12
8	200	155 to 4 850	1200	10	15
10	250	250 to 7 500	1500	15	30
12	300	350 to 10 600	2400	25	45
14	350	500 to 15 000	3600	30	60
16	400	600 to 19 000	4800	50	60

Nominal diameter		Recommended flow	Factory settings		
		min./max. full scale value (v ~ 0.3/10 m/s)	Full scale value current output (v ~ 2.5 m/s)	Pulse value (~ 2 pulse/s)	Low flow cut off (v ~ 0.04 m/s)
[in]	[mm]	[gal/min]	[gal/min]	[gal]	[gal/min]
18	450	800 to 24 000	6000	50	90
20	500	1 000 to 30 000	7500	75	120
24	600	1 400 to 44 000	10500	100	180

Recommended measuring range

Flow limit → 196

Operable flow range

Over 1000 : 1

Input signal

External measured values

To increase the accuracy of certain measured variables or to calculate the mass flow, the automation system can continuously write different measured values to the measuring device:
- Medium temperature to increase the accuracy of the electrical conductivity (e.g. iTEMP)
- Reference density for calculating the mass flow

Various pressure transmitters and temperature measuring devices can be ordered from Endress+Hauser: see "Accessories" section → 179

It is recommended to read in external measured values to calculate the corrected volume flow.

HART protocol

The measured values are written from the automation system to the measuring device via the HART protocol. The pressure transmitter must support the following protocol-specific functions:
- HART protocol
- Burst mode

Current input

The measured values are written from the automation system to the measuring device via the current input → 182.

Current input 0/4 to 20 mA

Current input	0/4 to 20 mA (active/passive)
Current span	▪ 4 to 20 mA (active) ▪ 0/4 to 20 mA (passive)
Resolution	1 µA
Voltage drop	Typically: 0.6 to 2 V for 3.6 to 22 mA (passive)
Maximum input voltage	≤ 30 V (passive)
Open-circuit voltage	≤ 28.8 V (active)
Possible input variables	▪ Pressure ▪ Temperature ▪ Density ▪

Status input

Maximum input values	▪ DC −3 to 30 V ▪ If status input is active (ON): R_i >3 kΩ
Response time	Configurable: 5 to 200 ms
Input signal level	▪ Low signal: DC −3 to +5 V ▪ High signal: DC 12 to 30 V
Assignable functions	▪ Off ▪ Reset the individual totalizers separately ▪ Reset all totalizers ▪ Flow override

16.4 Output

Output signal

Current output 4 to 20 mA HART

Order code	"Output; Input 1" (20): Option BA: current output 4 to 20 mA HART
Signal mode	Can be set to: ▪ Active ▪ Passive
Current range	Can be set to: ▪ 4 to 20 mA NAMUR ▪ 4 to 20 mA US ▪ 4 to 20 mA ▪ 0 to 20 mA (only with signal mode active) ▪ Fixed current value
Open-circuit voltage	DC 28.8 V (active)
Maximum input voltage	DC 30 V (passive)
Load	250 to 700 Ω
Resolution	0.38 µA
Damping	Configurable: 0 to 999 s
Assignable measured variables	▪ Volume flow ▪ Mass flow ▪ Corrected volume flow ▪ Flow velocity ▪ Conductivity ▪ Electronics temperature

Current output 4 to 20 mA HART Ex i

Order code	"Output; Input 1" (20) can be set to: ▪ Option CA: current output 4 to 20 mA HART Ex i passive ▪ Option CC: current output 4 to 20 mA HART Ex i active
Signal mode	Depending on the ordered variant.
Current range	Can be set to: ▪ 4 to 20 mA NAMUR ▪ 4 to 20 mA US ▪ 4 to 20 mA ▪ 0 to 20 mA (only with signal mode active) ▪ Fixed current value
Open-circuit voltage	DC 21.8 V (active)
Maximum input voltage	DC 30 V (passive)
Load	▪ 250 to 400 Ω (active) ▪ 250 to 700 Ω (passive)
Resolution	0.38 µA
Damping	Configurable: 0 to 999 s
Assignable measured variables	▪ Volume flow ▪ Mass flow ▪ Corrected volume flow ▪ Flow velocity ▪ Conductivity ▪ Electronics temperature

Current output 4 to 20 mA

Order code	"Output; Input 2" (21), "Output; Input 3" (022) or "Output; Input 4" (023): Option B: current output 4 to 20 mA
Signal mode	Can be set to: ▪ Active ▪ Passive
Current range	Can be set to: ▪ 4 to 20 mA NAMUR ▪ 4 to 20 mA US ▪ 4 to 20 mA ▪ 0 to 20 mA (only with signal mode active) ▪ Fixed current value
Maximum output values	22.5 mA
Open-circuit voltage	DC 28.8 V (active)
Maximum input voltage	DC 30 V (passive)
Load	0 to 700 Ω
Resolution	0.38 µA
Damping	Configurable: 0 to 999 s
Assignable measured variables	▪ Volume flow ▪ Mass flow ▪ Corrected volume flow ▪ Flow velocity ▪ Conductivity ▪ Electronics temperature

Current output 4 to 20 mA Ex i passive

Order code	"Output; Input 2" (21), "Output; Input 3" (022): Option C: current output 4 to 20 mA Ex i passive
Signal mode	Passive
Current range	Can be set to: ▪ 4 to 20 mA NAMUR ▪ 4 to 20 mA US ▪ 4 to 20 mA ▪ Fixed current value
Maximum output values	22.5 mA
Maximum input voltage	DC 30 V
Load	0 to 700 Ω
Resolution	0.38 µA
Damping	Configurable: 0 to 999 s
Assignable measured variables	▪ Volume flow ▪ Mass flow ▪ Corrected volume flow ▪ Flow velocity ▪ Conductivity ▪ Electronics temperature

Pulse/frequency/switch output

Function	Can be set to pulse, frequency or switch output
Version	Open collector Can be set to: ▪ Active ▪ Passive ▪ Passive NAMUR Ex-i, passive
Maximum input values	DC 30 V, 250 mA (passive)
Open-circuit voltage	DC 28.8 V (active)
Voltage drop	For 22.5 mA: ≤ DC 2 V
Pulse output	
Maximum input values	DC 30 V, 250 mA (passive)
Maximum output current	22.5 mA (active)
Open-circuit voltage	DC 28.8 V (active)
Pulse width	Configurable: 0.05 to 2 000 ms
Maximum pulse rate	10 000 Impulse/s
Pulse value	Adjustable
Assignable measured variables	▪ Volume flow ▪ Mass flow ▪ Corrected volume flow
Frequency output	
Maximum input values	DC 30 V, 250 mA (passive)
Maximum output current	22.5 mA (active)
Open-circuit voltage	DC 28.8 V (active)
Output frequency	Adjustable: end value frequency 2 to 10 000 Hz (f_{max} = 12 500 Hz)
Damping	Configurable: 0 to 999 s
Pulse/pause ratio	1:1
Assignable measured variables	▪ Volume flow ▪ Mass flow ▪ Corrected volume flow ▪ Flow velocity ▪ Conductivity ▪ Electronics temperature
Switch output	
Maximum input values	DC 30 V, 250 mA (passive)
Open-circuit voltage	DC 28.8 V (active)
Switching behavior	Binary, conductive or non-conductive
Switching delay	Configurable: 0 to 100 s

Number of switching cycles	Unlimited

Assignable functions	▪ Off
	▪ On
	▪ Diagnostic behavior
	▪ Limit value:
	  ▪ Off
	  ▪ Volume flow
	  ▪ Mass flow
	  ▪ Corrected volume flow
	  ▪ Flow velocity
	  ▪ Conductivity
	  ▪ Totalizer 1-3
	  ▪ Electronics temperature
	▪ Flow direction monitoring
	▪ Status
	  ▪ Empty pipe detection
	  ▪ Low flow cut off

Double pulse output

Function	Double pulse
Version	Open collector Can be set to: ▪ Active ▪ Passive ▪ Passive NAMUR
Maximum input values	DC 30 V, 250 mA (passive)
Open-circuit voltage	DC 28.8 V (active)
Voltage drop	For 22.5 mA: ≤ DC 2 V
Output frequency	Configurable: 0 to 1 000 Hz
Damping	Configurable: 0 to 999 s
Pulse/pause ratio	1:1
Assignable measured variables	▪ Volume flow ▪ Mass flow ▪ Corrected volume flow ▪ Flow velocity ▪ Conductivity ▪ Electronics temperature

Relay output

Function	Switch output
Version	Relay output, galvanically isolated
Switching behavior	Can be set to: ▪ NO (normally open), factory setting ▪ NC (normally closed)

Maximum switching capacity (passive)	▪ DC 30 V, 0.1 A ▪ AC 30 V, 0.5 A

Assignable functions	▪ Off
	▪ On
	▪ Diagnostic behavior
	▪ Limit value:
	  ▪ Off
	  ▪ Volume flow
	  ▪ Mass flow
	  ▪ Corrected volume flow
	  ▪ Flow velocity
	  ▪ Conductivity
	  ▪ Totalizer 1-3
	  ▪ Electronic temperature
	▪ Flow direction monitoring
	▪ Status
	  ▪ Empty pipe detection
	  ▪ Low flow cut off

User-configurable input/output

One specific input or output is assigned to a user-configurable input/output (configurable I/O) during device commissioning.

The following inputs and outputs are available for assignment:
- Choice of current output: 4 to 20 mA (active), 0/4 to 20 mA (passive)
- Pulse/frequency/switch output
- Choice of current input: 4 to 20 mA (active), 0/4 to 20 mA (passive)
- Status input

Signal on alarm

Depending on the interface, failure information is displayed as follows:

Current output 0/4 to 20 mA

4 to 20 mA

Failure mode	Choose from: ▪ 4 to 20 mA in accordance with NAMUR recommendation NE 43 ▪ 4 to 20 mA in accordance with US ▪ Min. value: 3.59 mA ▪ Max. value: 22.5 mA ▪ Freely definable value between: 3.59 to 22.5 mA ▪ Actual value ▪ Last valid value

0 to 20 mA

Failure mode	Choose from: ▪ Maximum alarm: 22 mA ▪ Freely definable value between: 0 to 20.5 mA

Pulse/frequency/switch output

Pulse output	
Failure mode	Choose from: ▪ Actual value ▪ No pulses
Frequency output	

Failure mode	Choose from: ▪ Actual value ▪ 0 Hz ▪ Defined value (f_{max} 2 to 12 500 Hz)
Switch output	
Failure mode	Choose from: ▪ Current status ▪ Open ▪ Closed

Relay output

Failure mode	Choose from: ▪ Current status ▪ Open ▪ Closed

Local display

Plain text display	With information on cause and remedial measures
Backlight	Red backlighting indicates a device error.

Status signal as per NAMUR recommendation NE 107

Interface/protocol

- Via digital communication:
  HART protocol
- Via service interface
  - CDI-RJ45 service interface
  - WLAN interface

Plain text display	With information on cause and remedial measures

Web browser

Plain text display	With information on cause and remedial measures

Light emitting diodes (LED)

Status information	Status indicated by various light emitting diodes The following information is displayed depending on the device version: ▪ Supply voltage active ▪ Data transmission active ▪ Device alarm/error has occurred Diagnostic information via light emitting diodes → 🖹 150

Low flow cut off	The switch points for low flow cut off are user-selectable.
Galvanic isolation	The outputs are galvanically isolated from one another and from earth (PE).

Protocol-specific data

Manufacturer ID	0x11
Device type ID	0x3C
HART protocol revision	7
Device description files (DTM, DD)	Information and files under: www.endress.com
HART load	Min. 250 Ω
System integration	Information on system integration → 🖹 91. ▪ Measured variables via HART protocol ▪ Burst Mode functionality

16.5 Power supply

Terminal assignment

→ 🖹 42

Supply voltage

Order code for "Power supply"	Terminal voltage		Frequency range
Option **D**	DC24 V	±20%	–
Option **E**	AC100 to 240 V	−15…+10%	50/60 Hz, ±4 Hz
Option **I**	DC24 V	±20%	–
	AC100 to 240 V	−15…+10%	50/60 Hz, ±4 Hz

Power consumption

Transmitter

Max. 10 W (active power)

switch-on current	Max. 36 A (<5 ms) as per NAMUR Recommendation NE 21

Current consumption

Transmitter

- Max. 400 mA (24 V)
- Max. 200 mA (110 V, 50/60 Hz; 230 V, 50/60 Hz)

Power supply failure

- Totalizers stop at the last value measured.
- Depending on the device version, the configuration is retained in the device memoryor in the pluggable data memory (HistoROM DAT).
- Error messages (incl. total operated hours) are stored.

Electrical connection

→ 🖹 51

Potential equalization

→ 🖹 56

Terminals

Spring-loaded terminals: Suitable for strands and strands with ferrules.
Conductor cross-section 0.2 to 2.5 mm² (24 to 12 AWG).

Cable entries
- Cable gland: M20 × 1.5 with cable Ø 6 to 12 mm (0.24 to 0.47 in)
- Thread for cable entry:
  - NPT ½"
  - G ½"
  - M20

Cable specification
→ 38

16.6 Performance characteristics

Reference operating conditions
- Error limits following DIN EN 29104, in future ISO 20456
- Water, typically: +15 to +45 °C (+59 to +113 °F); 0.5 to 7 bar (73 to 101 psi)
- Data as indicated in the calibration protocol
- Accuracy based on accredited calibration rigs according to ISO 17025

Maximum measured error

Error limits under reference operating conditions

o.r. = of reading

Volume flow
- ±0.5 % o.r. ± 1 mm/s (0.04 in/s)
- Optional: ±0.2 % o.r. ± 2 mm/s (0.08 in/s)

Fluctuations in the supply voltage do not have any effect within the specified range.

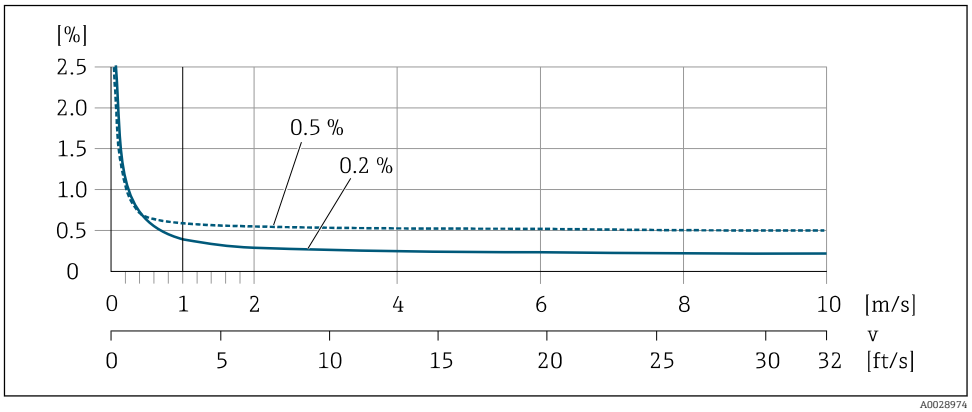

47 *Maximum measured error in % o.r.*

Electrical conductivity
Max. measured error not specified.

Accuracy of outputs

The outputs have the following base accuracy specifications.

Current output

Accuracy	±5 µA

Pulse/frequency output

o.r. = of reading

Accuracy	Max. ±50 ppm o.r. (over the entire ambient temperature range)

Repeatability

o.r. = of reading

Volume flow
Max. ±0.1 % o.r. ± 0.5 mm/s (0.02 in/s)

Electrical conductivity
Max. ±5 % o.r.

Influence of ambient temperature

Current output

Temperature coefficient	Max. 1 µA/°C

Pulse/frequency output

Temperature coefficient	No additional effect. Included in accuracy.

16.7 Installation

"Mounting requirements" → 23

16.8 Environment

Ambient temperature range

→ 25

Temperature tables

Observe the interdependencies between the permitted ambient and fluid temperatures when operating the device in hazardous areas.

For detailed information on the temperature tables, see the separate document entitled "Safety Instructions" (XA) for the device.

Storage temperature

The storage temperature corresponds to the operating temperature range of the transmitter and the sensor → 25.

- Protect the measuring device against direct sunlight during storage in order to avoid unacceptably high surface temperatures.
- Select a storage location where moisture cannot collect in the measuring device as fungus or bacteria infestation can damage the liner.
- If protection caps or protective covers are mounted these should never be removed before installing the measuring device.

Degree of protection

Transmitter
- As standard: IP66/67, type 4X enclosure
- When housing is open: IP20, type 1 enclosure
- Display module: IP20, type 1 enclosure

Sensor
As standard: IP66/67, type 4X enclosure

External WLAN antenna
IP67

Vibration- and shock-resistance

Vibration sinusoidal, in accordance with IEC 60068-2-6

Order code for "Sensor junction housing", option L "Cast, stainless" and order code for "Sensor option", option CG "Extended neck for insulation"
- 2 to 8.4 Hz, 3.5 mm peak
- 8.4 to 2 000 Hz, 1 g peak

Order code for "Sensor connection housing", option A "Alu, coated"
- 2 to 8.4 Hz, 7.5 mm peak
- 8.4 to 2 000 Hz, 2 g peak

Vibration broad-band random, according to IEC 60068-2-64

Order code for "Sensor junction housing", option L "Cast, stainless" and order code for "Sensor option", option CG "Extended neck for insulation"
- 10 to 200 Hz, 0.003 g^2/Hz
- 200 to 2 000 Hz, 0.001 g^2/Hz
- Total: 1.54 g rms

Order code for "Sensor connection housing", option A "Alu, coated"
- 10 to 200 Hz, 0.01 g^2/Hz
- 200 to 2 000 Hz, 0.003 g^2/Hz
- Total: 2.70 g rms

Shock half-sine, according to IEC 60068-2-27

- Order code for "Sensor junction housing", option L "Cast, stainless" and order code for "Sensor option", option CG "Extended neck for insulation"
  6 ms 30 g
- Order code for "Sensor connection housing", option A "Alu, coated"
  6 ms 50 g

Rough handling shocks according to IEC 60068-2-31

Mechanical load

- Protect the transmitter housing against mechanical effects, such as shock or impact.
- Never use the transmitter housing as a ladder or climbing aid.

Electromagnetic compatibility (EMC)

As per IEC/EN 61326 and NAMUR Recommendation 21 (NE 21)

Details are provided in the Declaration of Conformity.

16.9 Process

Medium temperature range

- −20 to +150 °C (−4 to +302 °F) for PFA, DN 25 to 200 (1 to 8")
- −20 to +180 °C (−4 to +356 °F) for PFA high-temperature, DN 25 to 200 (1 to 8")
- −40 to +130 °C (−40 to +266 °F) for PTFE, DN 15 to 600 (½ to 24")

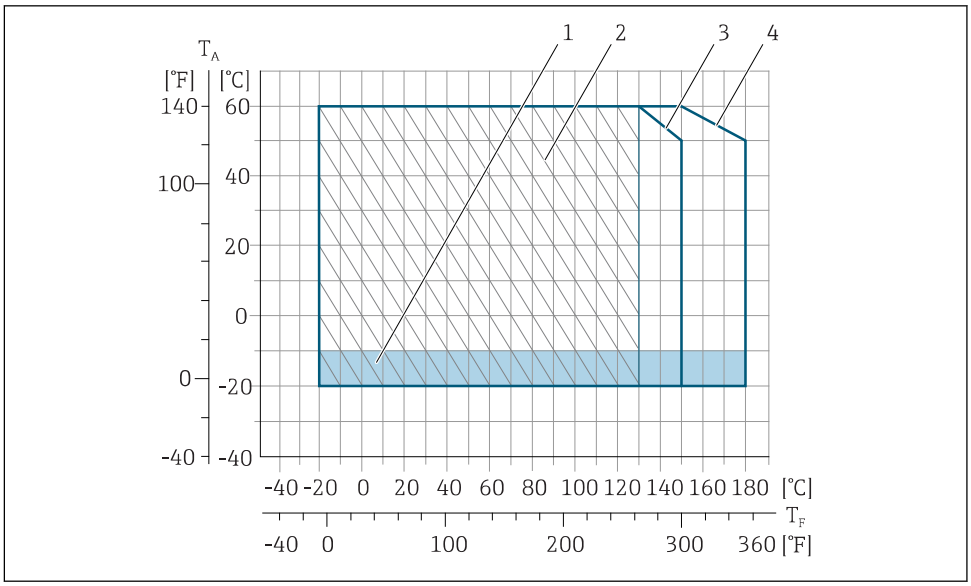

48 PFA

T_A Ambient temperature
T_F Medium temperature
1 Colored area: the ambient temperature range −10 to −20 °C (+14 to −4 °F) applies to stainless flanges only
2 Hatched area: harsh environment only for medium temperature range −20 to +130 °C (−4 to +266 °F)
3 −20 to +150 °C (−4 to +302 °F) for PFA, DN 25 to 200 (1 to 8")
4 −20 to +180 °C (−4 to +356 °F) for PFA high-temperature, DN 25 to 200 (1 to 8")

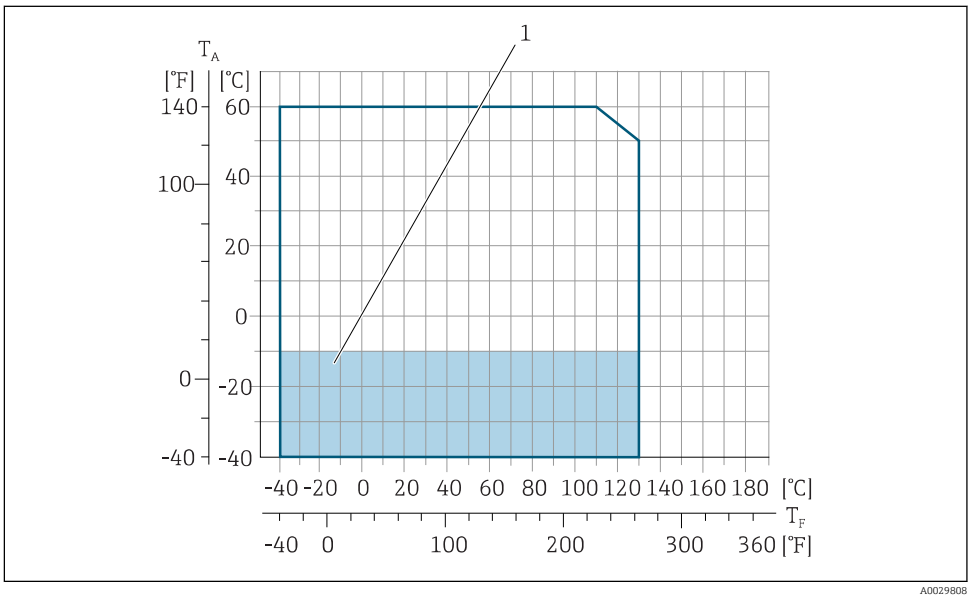

49 PTFE

T_A Ambient temperature
T_F Medium temperature
1 Colored area: the ambient temperature range of −10 to −40 °C (+14 to −40 °F) applies to stainless flanges only

Conductivity

≥ 5 µS/cm for liquids in general.

Proline 500
The necessary minimum conductivity also depends on the cable length .

Pressure-temperature ratings

An overview of the pressure-temperature ratings for the process connections is provided in the "Technical Information" document

Pressure tightness

Liner: PFA

Nominal diameter		Limit values for absolute pressure in [mbar] ([psi]) for medium temperatures:		
[mm]	[in]	+25 °C (+77 °F)	+80 °C (+176 °F)	+100 to +180 °C (+212 to +356 °F)
25	1	0 (0)	0 (0)	0 (0)
32	–	0 (0)	0 (0)	0 (0)
40	1 ½	0 (0)	0 (0)	0 (0)
50	2	0 (0)	0 (0)	0 (0)
65	–	0 (0)	0 (0)	0 (0)
80	3	0 (0)	0 (0)	0 (0)
100	4	0 (0)	0 (0)	0 (0)
125	–	0 (0)	0 (0)	0 (0)
150	6	0 (0)	0 (0)	0 (0)
200	8	0 (0)	0 (0)	0 (0)

Liner: PTFE

Nominal diameter		Limit values for absolute pressure in [mbar] ([psi]) for medium temperatures:			
[mm]	[in]	+25 °C (+77 °F)	+80 °C (+176 °F)	+100 °C (+212 °F)	+130 °C (+266 °F)
15	½	0 (0)	0 (0)	0 (0)	100 (1.45)
25	1	0 (0)	0 (0)	0 (0)	100 (1.45)
32	–	0 (0)	0 (0)	0 (0)	100 (1.45)
40	1 ½	0 (0)	0 (0)	0 (0)	100 (1.45)
50	2	0 (0)	0 (0)	0 (0)	100 (1.45)
65	–	0 (0)	–	40 (0.58)	130 (1.89)
80	3	0 (0)	–	40 (0.58)	130 (1.89)
100	4	0 (0)	–	135 (1.96)	170 (2.47)
125	–	135 (1.96)	–	240 (3.48)	385 (5.58)
150	6	135 (1.96)	–	240 (3.48)	385 (5.58)
200	8	200 (2.90)	–	290 (4.21)	410 (5.95)
250	10	330 (4.79)	–	400 (5.80)	530 (7.69)
300	12	400 (5.80)	–	500 (7.25)	630 (9.14)
350	14	470 (6.82)	–	600 (8.70)	730 (10.6)
400	16	540 (7.83)	–	670 (9.72)	800 (11.6)
450	18	No negative pressure permitted!			
500	20				
600	24				

Flow limit

The diameter of the pipe and the flow rate determine the nominal diameter of the sensor. The optimum velocity of flow is between 2 to 3 m/s (6.56 to 9.84 ft/s). Also match the velocity of flow (v) to the physical properties of the fluid:
- v < 2 m/s (6.56 ft/s): for abrasive fluids (e.g. potter's clay, lime milk, ore slurry)
- v > 2 m/s (6.56 ft/s): for fluids producing buildup (e.g. wastewater sludge)

A necessary increase in the flow velocity can be achieved by reducing the sensor nominal diameter.

For an overview of the full scale values for the measuring range, see the "Measuring range" section

Pressure loss

- No pressure loss occurs if the sensor is installed in a pipe with the same nominal diameter.
- Pressure losses for configurations incorporating adapters according to DIN EN 545 → 27

System pressure

→ 26

Vibrations

→ 26

16.10 Mechanical construction

Design, dimensions

For the dimensions and installation lengths of the device, see the "Technical Information" document, "Mechanical construction" section.

Weight

All values (weight exclusive of packaging material) refer to devices with flanges of the standard pressure rating.
The weight may be lower than indicated depending on the pressure rating and design.

Transmitter
- Proline 500 – digital polycarbonate: 1.4 kg (3.1 lbs)
- Proline 500 – digital aluminum: 2.4 kg (5.3 lbs)
- Proline 500 aluminum: 6.5 kg (14.3 lbs)
- Proline 500 cast, stainless: 15.6 kg (34.4 lbs)

Sensor
- Sensor with aluminum connection housing version: see the information in the following table
- Sensor with cast connection housing version, stainless: +3.7 kg (+8.2 lbs)

Weight in SI units

Nominal diameter		EN (DIN), AS [1]		ASME		JIS	
[mm]	[in]	Pressure rating	[kg]	Pressure rating	[kg]	Pressure rating	[kg]
15	½	PN 40	4.5	Class 150	4.5	10K	4.5
25	1	PN 40	5.3	Class 150	5.3	10K	5.3
32	–	PN 40	6	Class 150	–	10K	5.3
40	1 ½	PN 40	7.4	Class 150	7.4	10K	6.3
50	2	PN 40	8.6	Class 150	8.6	10K	7.3
65	–	PN 16	10	Class 150	–	10K	9.1
80	3	PN 16	12	Class 150	12	10K	10.5

Nominal diameter		EN (DIN), AS [1]		ASME		JIS	
[mm]	[in]	Pressure rating	[kg]	Pressure rating	[kg]	Pressure rating	[kg]
100	4	PN 16	14	Class 150	14	10K	12.7
125	–	PN 16	19.5	Class 150	–	10K	19
150	6	PN 16	23.5	Class 150	23.5	10K	22.5
200	8	PN 10	43	Class 150	43	10K	39.9
250	10	PN 10	63	Class 150	73	10K	67.4
300	12	PN 10	68	Class 150	108	10K	70.3
350	14	PN 10	103	Class 150	173	10K	79
400	16	PN 10	118	Class 150	203	10K	100
450	18	PN 10	159	Class 150	253	10K	128
500	20	PN 10	154	Class 150	283	10K	142
600	24	PN 10	206	Class 150	403	10K	188

1) For flanges to AS, only DN 25 and 50 are available.

Weight in US units

Nominal diameter		ASME	
[mm]	[in]	Pressure rating	[lbs]
15	½	Class 150	9.92
25	1	Class 150	11.7
40	1 ½	Class 150	16.3
50	2	Class 150	19.0
80	3	Class 150	26.5
100	4	Class 150	30.9
150	6	Class 150	51.8
200	8	Class 150	94.8
250	10	Class 150	161.0
300	12	Class 150	238.1
350	14	Class 150	381.5
400	16	Class 150	447.6
450	18	Class 150	557.9
500	20	Class 150	624.0
600	24	Class 150	888.6

Measuring tube specification

Nominal diameter		Pressure rating					Process connection internal diameter			
		EN (DIN)	ASME	AS 2129	AS 4087	JIS	PFA		PTFE	
[mm]	[in]	[bar]	[psi]	[bar]	[bar]	[bar]	[mm]	[in]	[mm]	[in]
15	½	PN 40	Class 150	–	–	20K	–	–	15	0.59
25	1	PN 40	Class 150	Table E	–	20K	23	0.91	26	1.02
32	–	PN 40	–	–	–	20K	32	1.26	35	1.38
40	1 ½	PN 40	Class 150	–	–	20K	36	1.42	41	1.61

Nominal diameter		Pressure rating					Process connection internal diameter			
		EN (DIN)	ASME	AS 2129	AS 4087	JIS	PFA		PTFE	
[mm]	[in]	[bar]	[psi]	[bar]	[bar]	[bar]	[mm]	[in]	[mm]	[in]
50	2	PN 40	Class 150	Table E	PN 16	10K	48	1.89	52	2.05
65	–	PN 16	–	–	–	10K	63	2.48	67	2.64
80	3	PN 16	Class 150	–	–	10K	75	2.95	80	3.15
100	4	PN 16	Class 150	–	–	10K	101	3.98	104	4.09
125	–	PN 16	–	–	–	10K	126	4.96	129	5.08
150	6	PN 16	Class 150	–	–	10K	154	6.06	156	6.14
200	8	PN 10	Class 150	–	–	10K	201	7.91	202	7.95
250	10	PN 10	Class 150	–	–	10K	–	–	256	10.1
300	12	PN 10	Class 150	–	–	10K	–	–	306	12.0
350	14	PN 10	Class 150	–	–	10K	–	–	337	13.3
400	16	PN 10	Class 150	–	–	10K	–	–	387	15.2
450	18	PN 10	Class 150	–	–	10K	–	–	432	17.0
500	20	PN 10	Class 150	–	–	10K	–	–	487	19.2
600	24	PN 10	Class 150	–	–	10K	–	–	593	23.3

Materials

Transmitter housing

Housing of Proline 500 – digital transmitter

Order code for "Transmitter housing":
- Option **A** "Aluminum coated": aluminum, AlSi10Mg, coated
- Option **D** "Polycarbonate": polycarbonate

Housing of Proline 500 transmitter

Order code for "Transmitter housing":
- Option **A** "Aluminum coated": aluminum, AlSi10Mg, coated
- Option **L** "Cast, stainless": cast, stainless steel, 1.4409 (CF3M) similar to 316L

Window material

Order code for "Transmitter housing":
- Option **A** "Aluminum, coated": glass
- Option **D** "Polycarbonate": plastic
- Option **L** "Cast, stainless": glass

Sensor connection housing

Order code for "Sensor connection housing":
- Option **A** "Aluminum coated": aluminum, AlSi10Mg, coated
- Option **L** "Cast, stainless": 1.4409 (CF3M) similar to 316L

Cable entries/cable glands

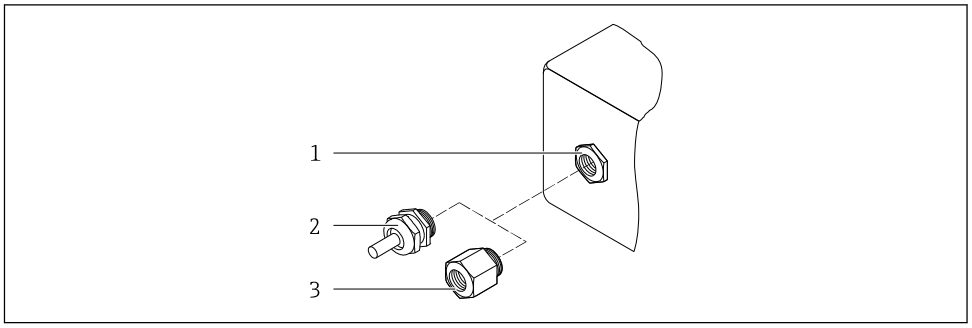

50 *Possible cable entries/cable glands*

1 Female thread M20 × 1.5
2 Cable gland M20 × 1.5
3 Adapter for cable entry with internal thread G ½" or NPT ½"

Cable entries and adapters	Material
Cable gland M20 × 1.5	Plastic
▪ Adapter for cable entry with internal thread G ½" ▪ Adapter for cable entry with internal thread NPT ½" Only available for certain device versions: ▪ Order code for "Transmitter housing": ▪ Option **A** "Aluminum, coated" ▪ Option **D** "Polycarbonate" ▪ Order code for "Sensor connection housing": ▪ Proline 500 – digital: Option **A** "Aluminum coated" Option **L** "Cast, stainless" ▪ Proline 500: Option **A** "Aluminum coated" Option **L** "Cast, stainless"	Nickel-plated brass
▪ Adapter for cable entry with internal thread G ½" ▪ Adapter for cable entry with internal thread NPT ½" Only available for certain device versions: ▪ Order code for "Transmitter housing": Option **L** "Cast, stainless" ▪ Order code for "Sensor connection housing": Option **L** "Cast, stainless"	Stainless steel, 1.4404 (316L)

Connecting cable

UV rays can impair the cable outer sheath. Protect the cable from exposure to sun as much as possible.

Connecting cable for sensor - Proline 500 – digital transmitter

PVC cable with copper shield

Connecting cable for sensor - Proline 500 transmitter

- Standard cable: PVC cable with copper shield
- Reinforced cable: PVC cable with copper shield and additional steel wire braided jacket

Sensor housing

- DN 15 to 300 (½ to 12"): coated aluminum AlSi10Mg
- DN 350 to 600 (14 to 24"): carbon steel with protective varnish

Measuring tubes

Stainless steel, 1.4301/304/1.4306/304L
For flanges made of carbon with Al/Zn protective coating (DN 15 to 300 (½ to 12")) or protective varnish (DN 350 to 600 (14 to 24"))

Liner

- PFA
- PTFE

Process connections

EN 1092-1 (DIN 2501)
Stainless steel, 1.4571; carbon steel, E250C [3]/S235JRG2/P245GH

ASME B16.5
Stainless steel, F316L; carbon steel, A105 [3]

JIS B2220
Stainless steel, F316L [3]; carbon steel, A105/A350 LF2

AS 2129 Table E
- DN 25 (1"): carbon steel, A105/S235JRG2
- DN 40 (1 ½"): carbon steel, A105/S275JR

AS 4087 PN 16
Carbon steel, A105/S275JR

Electrodes

Stainless steel, 1.4435 (F316L); Alloy C22, 2.4602 (UNS N06022); platinum; tantalum; titanium

Seals

As per DIN EN 1514-1, form IBC

Accessories

Protective cover

Stainless steel, 1.4404 (316L)

External WLAN antenna

- Antenna: ASA plastic (acrylic ester-styrene-acrylonitrile) and nickel-plated brass
- Adapter: Stainless steel and nickel-plated brass
- Cable: Polyethylene
- Plug: Nickel-plated brass
- Angle bracket: Stainless steel

Ground disks

Stainless steel, 1.4435 (F316L); Alloy C22, 2.4602 (UNS N06022); tantalum; titanium

Fitted electrodes

Measuring electrodes, reference electrodes and electrodes for empty pipe detection:
- Standard: stainless steel, 1.4435 (F316L); Alloy C22, 2.4602 (UNS N06022); tantalum, titanium
- Optional: only platinum measuring electrodes

3) DN 15 to 300 (½ to 12") with Al/Zn protective varnish; DN 350 to 600 (14 to 24") with protective varnish

Process connections

- EN 1092-1 (DIN 2501)
- ASME B16.5
- JIS B2220
- AS 2129 Table E
- AS 4087 PN 16

For information on the different materials used in the process connections → 200

Surface roughness

Stainless steel electrodes, 1.4435 (F316L); Alloy C22, 2.4602 (UNS N06022); platinum; tantalum; titanium:
≤ 0.3 to 0.5 µm (11.8 to 19.7 µin)
(All data relate to parts in contact with fluid)

Liner with PFA:
≤ 0.4 µm (15.7 µin)
(All data relate to parts in contact with fluid)

16.11 Human interface

Languages

Can be operated in the following languages:
- Via local operation
  English, German, French, Spanish, Italian, Dutch, Portuguese, Polish, Russian, Turkish, Chinese, Japanese, Korean, Bahasa (Indonesian), Vietnamese, Czech, Swedish
- Via Web browser
  English, German, French, Spanish, Italian, Dutch, Portuguese, Polish, Russian, Turkish, Chinese, Japanese, Korean, Bahasa (Indonesian), Vietnamese, Czech, Swedish
- Via "FieldCare", "DeviceCare" operating tool: English, German, French, Spanish, Italian, Chinese, Japanese

Local operation

Via display module

Equipment:
- Order code for "Display; operation", option F "4-line, illuminated, graphic display; touch control"
- Order code for "Display; operation", option G "4-line, illuminated, graphic display; touch control + WLAN"

Information about WLAN interface → 86

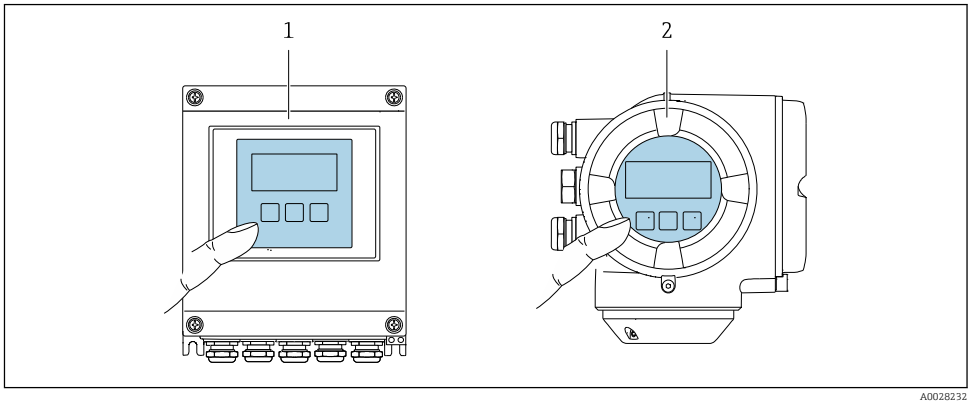

51 *Operation with touch control*

1 Proline 500 – digital
2 Proline 500

Display elements

- 4-line, illuminated, graphic display
- White background lighting; switches to red in event of device errors
- Format for displaying measured variables and status variables can be individually configured
- Permitted ambient temperature for the display: −20 to +60 °C (−4 to +140 °F)
  The readability of the display may be impaired at temperatures outside the temperature range.

Operating elements

- External operation via touch control (3 optical keys) without opening the housing: ⊞, ⊟, Ⓔ
- Operating elements also accessible in the various zones of the hazardous area

Remote operation

→ 🖹 84

Service interface

→ 🖹 85

Supported operating tools

Different operating tools can be used for local or remote access to the measuring device. Depending on the operating tool used, access is possible with different operating units and via a variety of interfaces.

Supported operating tools	Operating unit	Interface	Additional information
Web browser	Notebook, PC or tablet with Web browser	▪ CDI-RJ45 service interface ▪ WLAN interface	Special Documentation for device
DeviceCare SFE100	Notebook, PC or tablet with Microsoft Windows system	▪ CDI-RJ45 service interface ▪ WLAN interface ▪ Fieldbus protocol	→ 🖹 178
FieldCare SFE500	Notebook, PC or tablet with Microsoft Windows system	▪ CDI-RJ45 service interface ▪ WLAN interface ▪ Fieldbus protocol	→ 🖹 178
Device Xpert	Field Xpert SFX 100/350/370	HART and FOUNDATION Fieldbus fieldbus protocol	Operating Instructions BA01202S Device description files: Use update function of handheld terminal

Other operating tools based on FDT technology with a device driver such as DTM/iDTM or DD/EDD can be used for device operation. These operating tools are available from the individual manufacturers. Integration into the following operating tools, among others, is supported:

- FactoryTalk AssetCentre (FTAC) by Rockwell Automation → www.rockwellautomation.com
- Process Device Manager (PDM) by Siemens → www.siemens.com
- Asset Management Solutions (AMS) by Emerson → www.emersonprocess.com
- FieldCommunicator 375/475 by Emerson → www.emersonprocess.com
- Field Device Manager (FDM) by Honeywell → www.honeywellprocess.com
- FieldMate by Yokogawa → www.yokogawa.com
- PACTWare → www.pactware.com

The associated device description files are available at: www.endress.com → Downloads

Web server

Thanks to the integrated Web server, the device can be operated and configured via a Web browser and via a service interface (CDI-RJ45) or via a WLAN interface. The structure of the operating menu is the same as for the local display. In addition to the measured values, status information on the device is also displayed and allows the user to monitor the status of the device. Furthermore the device data can be managed and the network parameters can be configured.

A device that has a WLAN interface (can be ordered as an option) is required for the WLAN connection: order code for "Display; operation", option G "4-line, illuminated; touch control + WLAN". The device acts as an Access Point and enables communication by computer or a mobile handheld terminal.

Supported functions
Data exchange between the operating unit (such as a notebook for example) and the measuring device:
- Upload the configuration from the measuring device (XML format, configuration backup)
- Save the configuration to the measuring device (XML format, restore configuration)
- Export event list (.csv file)
- Export parameter settings (.csv file or PDF file, document the measuring point configuration)
- Export the Heartbeat verification log (PDF file, only available with the "Heartbeat Verification" application package)
- Flash firmware version for device firmware upgrade, for instance
- Download driver for system integration
- Visualize up to 1000 saved measured values (only available with the **Extended HistoROM** application package → 📄 206)

Web server special documentation → 📄 208

HistoROM data management

The measuring device features HistoROM data management. HistoROM data management comprises both the storage and import/export of key device and process data, making operation and servicing far more reliable, secure and efficient.

When the device is delivered, the factory settings of the configuration data are stored as a backup in the device memory. This memory can be overwritten with an updated data record, for example after commissioning.

Additional information on the data storage concept

There are different types of data storage units in which device data are stored and used by the device:

	Device memory	T-DAT	S-DAT
Available data	▪ Event logbook such as diagnostic events for example ▪ Parameter data record backup ▪ Device firmware package	▪ Measured value logging ("Extended HistoROM" order option) ▪ Current parameter data record (used by firmware at run time) ▪ Peakhold indicator (min/max values) ▪ Totalizer values	▪ Sensor data: nominal diameter etc. ▪ Serial number ▪ Calibration data ▪ Device configuration (e.g. SW options, fixed I/O or multi I/O)
Storage location	Fixed on the user interface board in the connection compartment	Attachable to the user interface board in the connection compartment	In the sensor plug in the transmitter neck part

Data backup

Automatic
- The most important device data (sensor and transmitter) are automatically saved in the DAT modules
- If the transmitter or measuring device is replaced: once the T-DAT containing the previous device data has been exchanged, the new measuring device is ready for operation again immediately without any errors
- If the sensor is replaced: once the sensor has been replaced, new sensor data are transferred from the S-DAT in the measuring device and the measuring device is ready for operation again immediately without any errors
- If exchanging the electronics module (e.g. I/O electronics module): Once the electronics module has been replaced, the software of the module is compared against the current device firmware. The module software is upgraded or downgraded where necessary. The electronics module is available for use immediately afterwards and no compatibility problems occur.

Manual
Additional parameter data record (complete parameter settings) in the integrated device memory HistoROM backup for:
- Data backup function
  Backup and subsequent restoration of a device configuration in the device memory HistoROM backup
- Data comparison function
  Comparison of the current device configuration with the device configuration saved in the device memory HistoROM backup

Data transfer

Manual
Transfer of a device configuration to another device using the export function of the specific operating tool, e.g. with FieldCare, DeviceCare or Web server: to duplicate the configuration or to store in an archive (e.g. for backup purposes)

Event list

Automatic
- Chronological display of up to 20 event messages in the events list
- If the **Extended HistoROM** application package (order option) is enabled: up to 100 event messages are displayed in the events list along with a time stamp, plain text description and remedial measures
- The events list can be exported and displayed via a variety of interfaces and operating tools e.g. DeviceCare, FieldCare or Web server

Data logging

Manual
If the **Extended HistoROM** application package (order option) is enabled:
- Record up to 1 000 measured values via 1 to 4 channels
- User configurable recording interval
- Record up to 250 measured values via each of the 4 memory channels
- Export the measured value log via a variety of interfaces and operating tools e.g. FieldCare, DeviceCare or web server

16.12 Certificates and approvals

Currently available certificates and approvals can be called up via the product configurator.

CE mark	The device meets the legal requirements of the applicable EU Directives. These are listed in the corresponding EU Declaration of Conformity along with the standards applied. Endress+Hauser confirms successful testing of the device by affixing to it the CE mark.
RCM-tick symbol	The measuring system meets the EMC requirements of the "Australian Communications and Media Authority (ACMA)".
Ex approval	The devices are certified for use in hazardous areas and the relevant safety instructions are provided in the separate "Safety Instructions" (XA) document. Reference is made to this document on the nameplate.
Pharmaceutical compatibility	▪ FDA ▪ USP Class VI ▪ TSE/BSE Certificate of Suitability
Functional safety	The measuring device can be used for flow monitoring systems (min., max., range) up to SIL 2 (single-channel architecture; order code for "Additional approval", option LA) and SIL 3 (multichannel architecture with homogeneous redundancy) and is independently evaluated and certified by the TÜV in accordance with IEC 61508. The following types of monitoring in safety equipment are possible: Functional Safety Manual with information on the SIL device → 208
HART certification	**HART interface** The measuring device is certified and registered by the FieldComm Group. The measuring system meets all the requirements of the following specifications: ▪ Certified according to HART 7 ▪ The device can also be operated with certified devices of other manufacturers (interoperability)
Radio approval	The measuring device has radio approval. For detailed information regarding radio approval, see Special Documentation
Pressure Equipment Directive	▪ With the identification PED/G1/x (x = category) on the sensor nameplate, Endress+Hauser confirms conformity with the "Essential Safety Requirements" specified in Appendix I of the Pressure Equipment Directive 2014/68/EU. ▪ Devices not bearing this marking (PED) are designed and manufactured according to good engineering practice. They meet the requirements of Article 4 paragraph 3 of the Pressure Equipment Directive 2014/68/EU. The range of application is indicated in tables 6 to 9 in Annex II of the Pressure Equipment Directive 2014/68/EU.
Measuring instrument approval	The measuring device is qualified to OIML R117 and has an OIML Certificate of Conformity (optional).
Additional certification	**PWIS-free** PWIS = paint-wetting impairment substances

Order code for "Service":
- Option **HC**: PWIS-free (version A)
- Option **HD**: PWIS-free (version B)
- Option **HE**: PWIS-free (version C)

For more information on PWIS-free certification, see "Test specification" document TS01028D

Other standards and guidelines

- EN 60529
  Degrees of protection provided by enclosures (IP code)
- EN 61010-1
  Safety requirements for electrical equipment for measurement, control and laboratory use - general requirements
- IEC/EN 61326
  Emission in accordance with Class A requirements. Electromagnetic compatibility (EMC requirements).
- NAMUR NE 21
  Electromagnetic compatibility (EMC) of industrial process and laboratory control equipment
- NAMUR NE 32
  Data retention in the event of a power failure in field and control instruments with microprocessors
- NAMUR NE 43
  Standardization of the signal level for the breakdown information of digital transmitters with analog output signal.
- NAMUR NE 53
  Software of field devices and signal-processing devices with digital electronics
- NAMUR NE 105
  Specifications for integrating fieldbus devices in engineering tools for field devices
- NAMUR NE 107
  Self-monitoring and diagnosis of field devices
- NAMUR NE 131
  Requirements for field devices for standard applications

16.13 Application packages

Many different application packages are available to enhance the functionality of the device. Such packages might be needed to address safety aspects or specific application requirements.

The application packages can be ordered with the device or subsequently from Endress+Hauser. Detailed information on the order code in question is available from your local Endress+Hauser sales center or on the product page of the Endress+Hauser website: www.endress.com.

Diagnostics functions

Package	Description
Extended HistoROM	Comprises extended functions concerning the event log and the activation of the measured value memory. Event log: Memory volume is extended from 20 message entries (standard version) to up to 100 entries. Data logging (line recorder): ▪ Memory capacity for up to 1000 measured values is activated. ▪ 250 measured values can be output via each of the 4 memory channels. The recording interval can be defined and configured by the user. ▪ Measured value logs can be accessed via the local display or operating tool e.g. FieldCare, DeviceCare or Web server.

Heartbeat Technology

Package	Description
Heartbeat Verification +Monitoring	**Heartbeat Verification** Meets the requirement for traceable verification to DIN ISO 9001:2008 Chapter 7.6 a) "Control of monitoring and measuring equipment". ▪ Functional testing in the installed state without interrupting the process. ▪ Traceable verification results on request, including a report. ▪ Simple testing process via local operation or other operating interfaces. ▪ Clear measuring point assessment (pass/fail) with high test coverage within the framework of manufacturer specifications. ▪ Extension of calibration intervals according to operator's risk assessment. **Heartbeat Monitoring** Continuously supplies data, which are characteristic of the measuring principle, to an external condition monitoring system for the purpose of preventive maintenance or process analysis. These data enable the operator to: ▪ Draw conclusions - using these data and other information - about the impact process influences (such as corrosion, abrasion, buildup etc.) have on the measuring performance over time. ▪ Schedule servicing in time. ▪ Monitor the process or product quality, e.g. gas pockets.

Cleaning

Package	Description
Electrode cleaning circuit (ECC)	The electrode cleaning circuit (ECC) function has been developed to have a solution for applications where magnetite (Fe_3O_4) deposits frequently occur (e.g. hot water). Since magnetite is highly conductive this build up leads to measuring errors and ultimately to the loss of signal. The application package is designed to AVOID build up of highly conductive matter and thin layers (typical of magnetite).

OPC-UA server

Package	Description
OPC-UA-Server	The application package provides the user with an integrated OPC-UA server for comprehensive instrument services for IoT and SCADA applications. Special Documentation for the "OPC-UA-Server" application package → 208.

16.14 Accessories

Overview of accessories available for order → 176

16.15 Supplementary documentation

For an overview of the scope of the associated Technical Documentation, refer to the following:
- *W@M Device Viewer* (www.endress.com/deviceviewer): Enter the serial number from nameplate
- *Endress+Hauser Operations App*: Enter the serial number from the nameplate or scan the 2D matrix code (QR code) on the nameplate

Standard documentation **Brief Operating Instructions**

Brief Operating Instructions for the sensor

Measuring device	Documentation code
Proline Promag P	KA01290D

Brief Operating Instructions for transmitter

Measuring device	Documentation code
Proline 500 – digital	KA01313D
Proline 500	KA01312D

Technical Information

Measuring device	Documentation code
Promag P 500	TI01226D

Description of device parameters

Measuring device	Documentation code
Promag 500	GP01054D

Device-dependent additional documentation

Safety instructions

Safety instructions for electrical equipment for hazardous areas.

Contents	Documentation code
ATEX/IECEx Ex i	XA01522D
ATEX/IECEx Ex ec	XA01523D
cCSAus IS	XA01524D
cCSAus Ex e ia/Ex d ia	XA01525D
cCSAus Ex nA	XA01526D
INMETRO Ex i	XA01527D
INMETRO Ex ec	XA01528D
NEPSI Ex i	XA01529D
NEPSI Ex nA	XA01530D
EAC Ex i	XA01658D
EAC Ex nA	XA01659D
JPN	XA01776D

Special Documentation

Contents	Documentation code
Information on the Pressure Equipment Directive	SD01614D
Functional Safety Manual	SD01741D
Radio approvals for WLAN interface for A309/A310 display module	SD01793D
OPC-UA Server	SD02044D

Contents	Documentation code
Heartbeat Technology	SD01641D
Web server	SD01658D

Installation Instructions

Content	Comment
Installation instructions for spare part sets and accessories	▪ Access the overview of all the available spare part sets via *W@M Device Viewer* → 174 ▪ Accessories available for order with Installation Instructions → 176

Index

A
About this document 6
Access authorization to parameters
  Read access 76
  Write access 76
Access code 76
  Incorrect input 76
Adapters 27
Adapting the diagnostic behavior 159
Adapting the status signal 159
Additional certification 205
Ambient temperature
  Influence 192
Ambient temperature range 25
AMS Device Manager 89
  Function 89
Application 180
Applicator 180
Approvals 204

B
Burst mode 93

C
Cable entries
  Technical data 191
Cable entry
  Degree of protection 62
CE mark 10, 205
Certificates 204
cGMP 205
Checklist
  Post-connection check 63
  Post-installation check 37
Cleaning
  Exterior cleaning 173
  Interior cleaning 173
Commissioning 95
  Advanced settings 120
  Configuring the measuring device 95
Communication-specific data 91
Compatibility 172
Conductivity 194
Connecting cable 38
Connecting the connecting cable
  Proline 500 – digital transmitter 48
  Proline 500 terminal assignment 51
  Proline 500 transmitter 53
  Sensor connection housing, Proline 500 51
  Sensor connection housing, Proline 500 - digital . . 46
  Terminal assignment of Proline 500 - digital 46
Connecting the measuring device
  Proline 500 51
  Proline 500 – digital 46
Connecting the signal cable/supply voltage cable
  Proline 500 – digital transmitter 49
  Proline 500 transmitter 54
Connection
  see Electrical connection
Connection examples, potential equalization 56
Connection preparations 43
Connection tools 38
Context menu
  Calling up 72
  Closing 72
  Explanation 72
Current consumption 190

D
Declaration of Conformity 10
Define access code 134, 135
Degree of protection 62, 192
Designated use 9
Device components 14
Device description files 91
Device documentation
  Supplementary documentation 8
Device history 172
Device locking, status 138
Device name
  Sensor 19
  Transmitter 17
Device repair 174
Device revision 91
Device type ID 91
DeviceCare 89
  Device description file 91
Diagnostic behavior
  Explanation 155
  Symbols 155
Diagnostic information
  Design, description 155, 158
  DeviceCare 158
  FieldCare 158
  Light emitting diodes 150
  Local display 154
  Overview 160
  Remedial measures 160
  Web browser 156
Diagnostic list 165
Diagnostic message 154
Diagnostics
  Symbols 154
DIP switch
  see Write protection switch
Direct access 74
Direct access code 69
Disabling write protection 134
Display
  see Onsite display
Display area
  For operational display 67

In the navigation view 69
Display values
For locking status 138
Disposal 174
Document
Function 6
Symbols 6
Document function 6
Down pipe 23

E
ECC 126
Editing view 70
Input screen 71
Using operating elements 71
Electrical connection
Commubox FXA195 (USB) 84
Computer with Web browser (e.g. Internet Explorer) 84
Degree of protection 62
Field Communicator 475 84
Field Xpert SFX350/SFX370 84
Field Xpert SMT70 84
Measuring device 38
Operating tool (e.g. FieldCare, AMS Device Manager, SIMATIC PDM) 84
Operating tools
Via HART protocol 84
Via service interface (CDI-RJ45) 85
Via WLAN interface 86
VIATOR Bluetooth modem 84
Web server 85
WLAN interface 86
Electromagnetic compatibility 193
Electronics module 14
Enabling write protection 134
Enabling/disabling the keypad lock 77
Endress+Hauser services
Maintenance 173
Repair 174
Environment
Ambient temperature range 25
Mechanical load 193
Storage temperature 192
Vibration- and shock-resistance 193
Error messages
see Diagnostic messages
Event list 165
Event logbook 165
Ex approval 205
Extended order code
Sensor 19
Transmitter 17
Exterior cleaning 173

F
FDA 205
Field Communicator
Function 90
Field Communicator 475 90
Field of application
Residual risks 10
Field Xpert
Function 88
Field Xpert SFX350 88
FieldCare 88
Device description file 91
Establishing a connection 88
Function 88
User interface 89
Filtering the event logbook 166
Firmware
Release date 91
Version 91
Firmware history 171
Fitted electrodes 200
Flow direction 24
Flow limit 196
Function check 95
Function range
Field Xpert 88
Function scope
AMS Device Manager 89
Field Communicator 90
Field Communicator 475 90
SIMATIC PDM 90
Functional safety (SIL) 205
Functions
see Parameter

G
Galvanic isolation 189

H
Hardware write protection 135
HART certification 205
HART input
Settings 114
HART protocol
Device variables 91
Measured values 91
Heavy sensors 24
Help text
Calling up 75
Closing 75
Explanation 75
HistoROM 128

I
Identifying the measuring device 16
Incoming acceptance 16
Influence
Ambient temperature 192
Inlet runs 25
Input 180
Inspection
Installation 37
Received goods 16

Inspection check
Connection 63
Installation 23
Installation conditions
Adapters 27
Down pipe 23
Heavy sensors 24
Inlet and outlet runs 25
Installation dimensions 25
Mounting location 23
Orientation 24
Partially filled pipe 23
System pressure 26
Thermal insulation 26
Vibrations 26
Installation dimensions 25
Interior cleaning 173

L

Languages, operation options 201
Line recorder 144
Local display 201
Navigation view 68
see Diagnostic message
see In alarm condition
see Operational display
Low flow cut off 189

M

Main electronics module 14
Maintenance tasks 173
Replacing seals 173
Managing the device configuration 128
Manufacturer ID 91
Manufacturing date 17, 19
Materials 198
Maximum measured error 191
Measured values
Calculated 180
Measured 180
see Process variables
Measuring and test equipment 173
Measuring device
Configuration 95
Conversion 174
Disposal 175
Integrating via communication protocol 91
Mounting the sensor 29
Mounting the ground cable/ground disks 29
Mounting the seals 29
Screw tightening torques 30
Screw tightening torques, maximum 30
Screw tightening torques, nominal 33
Preparing for electrical connection 43
Preparing for mounting 29
Removing 174
Repairs 174
Structure 14
Switch-on 95
Measuring instrument approval 205
Measuring principle 180
Measuring range 180
Measuring system 180
Measuring tube specification 197
Mechanical load 193
Medium temperature range 193
Menu
Diagnostics 164
Setup 97
Menus
For measuring device configuration 95
For specific settings 120
Mounting dimensions
see Installation dimensions
Mounting location 23
Mounting preparations 29
Mounting tools 28

N

Nameplate
Sensor 19
Transmitter 17
Navigation path (navigation view) 68
Navigation view
In the submenu 68
In the wizard 68
Numeric editor 70

O

Onsite display
Numeric editor 70
Text editor 70
Operable flow range 182
Operating elements 72, 155
Operating keys
see Operating elements
Operating menu
Menus, submenus 65
Structure 65
Submenus and user roles 66
Operating philosophy 66
Operation 138
Operation options 64
Operational display 67
Operational safety 10
Order code 17, 19
Orientation (vertical, horizontal) 24
Outlet runs 25
Output 184
Output signal 184

P

Packaging disposal 22
Parameter
Changing 75
Entering values or text 75
Parameter settings
Administration (Submenu) 131

Advanced setup (Submenu) 121
Burst configuration 1 to n (Submenu) 93
Configuration (Submenu) 115
Configuration backup (Submenu) 128
Current input 101
Current input (Wizard) 101
Current input 1 to n (Submenu) 140
Current output 102
Current output (Wizard) 102
Data logging (Submenu) 144
Define access code (Wizard) 130
Device information (Submenu) 168
Diagnostics (Menu) 164
Display (Submenu) 123
Display (Wizard) 111
Double pulse output 118
Double pulse output (Submenu) 118, 143
Electrode cleaning circuit (Submenu) 126
Empty pipe detection (Wizard) 114
I/O configuration 99
I/O configuration (Submenu) 99
Input (Submenu) 116
Low flow cut off (Wizard) 113
Process variables (Submenu) 138
Pulse/frequency/switch output 105
Pulse/frequency/switch output (Wizard) 105, 106, 109
Pulse/frequency/switch output 1 to n (Submenu) 142
Relay output 116
Relay output 1 to n (Submenu) 142
Relay output 1 to n (Wizard) 116
Reset access code (Submenu) 130
Sensor adjustment (Submenu) 121
Setup (Menu) 97
Simulation (Submenu) 131
Status input 100
Status input (Submenu) 100
Status input 1 to n (Submenu) 140
System units (Submenu) 97
Totalizer (Submenu) 139
Totalizer 1 to n (Submenu) 121
Totalizer handling (Submenu) 143
Value current output 1 to n (Submenu) 141
Web server (Submenu) 83
WLAN settings (Wizard) 127
Partially filled pipe 23
Performance characteristics 191
Pharmaceutical compatibility 205
Post-connection check (checklist) 63
Post-installation check 95
Post-installation check (checklist) 37
Potential equalization 56
Power consumption 190
Power supply failure 190
Pressure Equipment Directive 205
Pressure loss 196
Pressure tightness 195
Pressure-temperature ratings 195
Process conditions
Conductivity 194
Flow limit 196
Medium temperature 193
Pressure loss 196
Pressure tightness 195
Process connections 201
Product safety 10
Proline 500 – digital transmitter
Connecting the signal cable/supply voltage cable . . 49
Proline 500 connecting cable terminal assignment
Sensor connection housing 51
Proline 500 transmitter
Connecting the signal cable/supply voltage cable . . 54
Protecting parameter settings 134

R

Radio approval 205
RCM-tick symbol 205
Read access 76
Reading measured values 138
Recalibration 173
Reference operating conditions 191
Registered trademarks 8
Remedial measures
Calling up 156
Closing 156
Remote operation 202
Repair 174
Repair of a device 174
Repairs
Notes 174
Repeatability 192
Replacement
Device components 174
Replacing seals 173
Requirements for personnel 9
Return 174

S

Safety 9
Screw tightening torques 30
Maximum 30
Nominal 33
Sensor
Mounting 29
Serial number 17, 19
Setting the operating language 95
Settings
Adapting the measuring device to the process conditions 143
Administration 130
Advanced display configurations 123
Current input 101
Current output 102
Device reset 168
Double pulse output 118
Electrode cleaning circuit (ECC) 126
Empty pipe detection (EPD) 114

HART input 114
I/O configuration 99
Local display 111
Low flow cut off 113
Managing the device configuration 128
Operating language 95
Pulse output 105
Pulse/frequency/switch output 105, 106
Relay output 116
Resetting the totalizer 143
Sensor adjustment 121
Simulation 131
Status input 100
Switch output 109
System units 97
Tag name 97
Totalizer 121
Totalizer reset 143
WLAN 127
Showing data logging 144
Signal on alarm 188
SIL (functional safety) 205
SIMATIC PDM 90
Function 90
Software release 91
Spare part 174
Spare parts 174
Special connection instructions 58
Standards and guidelines 206
Status area
For operational display 67
In the navigation view 69
Status signals 154, 157
Storage concept 203
Storage conditions 21
Storage temperature 21
Storage temperature range 192
Structure
Measuring device 14
Operating menu 65
Submenu
Administration 130, 131
Advanced setup 120, 121
Burst configuration 1 to n 93
Configuration 115
Configuration backup 128
Current input 1 to n 140
Data logging 144
Device information 168
Display 123
Double pulse output 118, 143
Electrode cleaning circuit 126
Event list 165
HART input 114
I/O configuration 99
Input 116
Input values 140
Output values 141
Overview 66
Process variables 138
Pulse/frequency/switch output 1 to n 142
Relay output 1 to n 142
Reset access code 130
Sensor adjustment 121
Simulation 131
Status input 100
Status input 1 to n 140
System units 97
Totalizer 139
Totalizer 1 to n 121
Totalizer handling 143
Value current output 1 to n 141
Web server 83
Supplementary documentation 207
Supply voltage 190
Surface roughness 201
Switch output 187
Symbols
Controlling data entries 71
For communication 67
For diagnostic behavior 67
For locking 67
For measured variable 67
For measurement channel number 67
For menus 69
For parameters 69
For status signal 67
For submenu 69
For wizard 69
In the status area of the local display 67
Input screen 71
Operating elements 71
System design
Measuring system 180
see Measuring device design
System integration 91
System pressure 26

T

Technical data, overview 180
Temperature range
Ambient temperature range for display 201
Storage temperature 21
Terminal assignment 42
Terminal assignment of connecting cable for Proline 500- digital
Sensor connection housing 46
Terminals 190
Text editor 70
Thermal insulation 26
Tool tip
see Help text
Tools
Electrical connection 38
For mounting 28
Transport 21
Totalizer
Configuration 121

Transmitter
Turning the display module 37
Turning the housing 36
Transporting the measuring device 21
Troubleshooting
General 148
TSE/BSE Certificate of Suitability 205
Turning the display module 37
Turning the electronics housing
see Turning the transmitter housing
Turning the transmitter housing 36

U

Use of the measuring device
Borderline cases 9
Incorrect use 9
see Designated use
User interface
Current diagnostic event 164
Previous diagnostic event 164
User roles 66
USP Class VI 205

V

Version data for the device 91
Vibration- and shock-resistance 193
Vibrations 26

W

W@M 173, 174
W@M Device Viewer 16, 174
Weight
Transport (notes) 21
Wizard
Current input 101
Current output 102
Define access code 130
Display 111
Empty pipe detection 114
Low flow cut off 113
Pulse/frequency/switch output 105, 106, 109
Relay output 1 to n 116
WLAN settings 127
WLAN settings 127
Workplace safety 10
Write access 76
Write protection
Via access code 134
Via write protection switch 135
Write protection switch 135

www.addresses.endress.com

Endress+Hauser

People for Process Automation

Section 3.2.6

EQ Tank Blower

SCL R20 / R30 / R40
MD SERIES

SN 2464-7 1/2

STANDARD FEATURES
- Low weight cast aluminum construction.
- Quiet operation with integral inlet and outlet muffling.
- Recognized TEFC - cURus motor.
- High efficiency / low noise impeller design.
- No lubrication / maintenance required.
- Allowed ambient: +5 °F to +104 °F.
- Mountable in any plane.

OPTIONS
- Remote drive models (belt or coupling).
- Special voltages.
- Surface treatment or plating.
- Gas tight sealing.
- Special designs available.

ACCESSORIES
- Inlet and/or inline filters.
- Additional inlet/outlet silencers.
- Relief valves.
- Flow converting devices.
- Optionals connectors

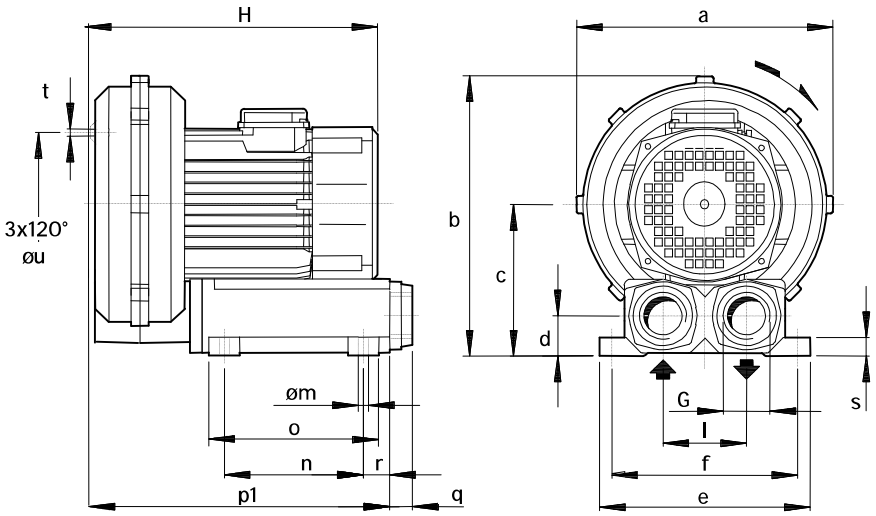

Dimensions in inches.
Dimension for reference only.

Model	a	b	c	d	e	f	G	l	m	n	o	p1	q	r	s	t	u
R20-MD	11.14	12.17	6.57	1.85	9.25	8.27	1" ¼ NPT	3.54	0.39	5.91	7.87	13.58	0.71	1.77	0.87	M6	5.91
R30-MD	12.56	13.62	7.36	1.85	9.25	8.27	1" ¼ NPT	3.54	0.39	5.91	7.87	13.94	0.71	1.77	0.87	M6	7.09
R40-MD	13.78	14.65	7.76	1.85	9.25	8.27	1" ¼ NPT	3.54	0.39	5.91	7.87	14.33	0.71	1.77	0.87	M8	8.86

Model	Maximum flow Scfm		Installed power Hp		Maximum differential pressure Δp (In WG)		Noise level Lp dB (A) (1)		Overall dimensions H	Weight
	60 Hz 3500 rpm	50 Hz 2900 rpm	60 Hz 3500 rpm	50 Hz 2900 rpm	60 Hz 3500 rpm	50 Hz 2900 rpm	60 Hz 3500 rpm	50 Hz 2900 rpm	Inches	Lbs
R20-MD	41	35	1 ½	1 ½	161	161	68.5	66.5	13.39	48.5
R30-MD	65	54	2	2	140	170	72.2	69.2	15.58	57.3
			3	-	191	-	72.8	69.7	15.55	66.1
R40-MD	78	69	3	3	141	170	72.8	70.8	16.22	77.2
			4	4	201	201	73.3	71.3	17.09	88.2

(1) Noise measured at 1 m distance with inlet and outlet ports piped, in accordance to ISO 3744.

- For proper use, the blower should be equipped with inlet filter and relief valve; other accessories available on request.
- Ambient temperaturefrom +5° to +104°F.
- Specifications subject to change without notice.

SCL R20 / R30 / R40 MD SERIES

SN 2464-7 2/2

CAPACITY

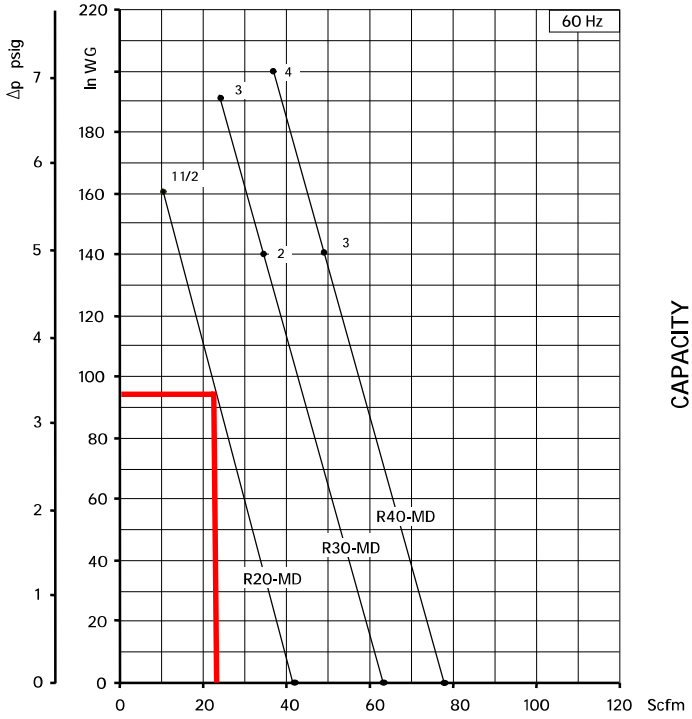

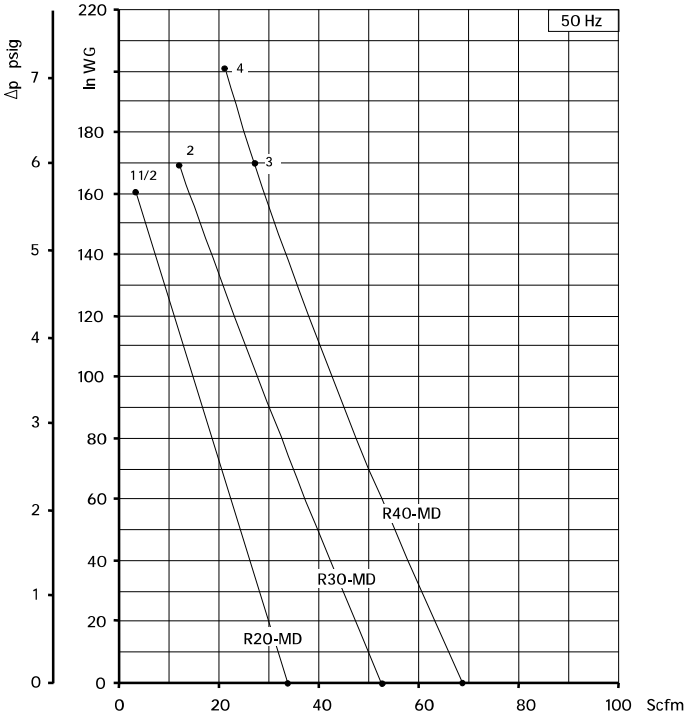

ABSORBED POWER

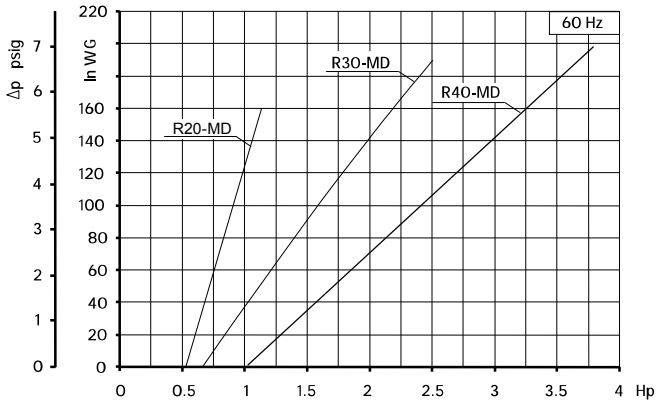

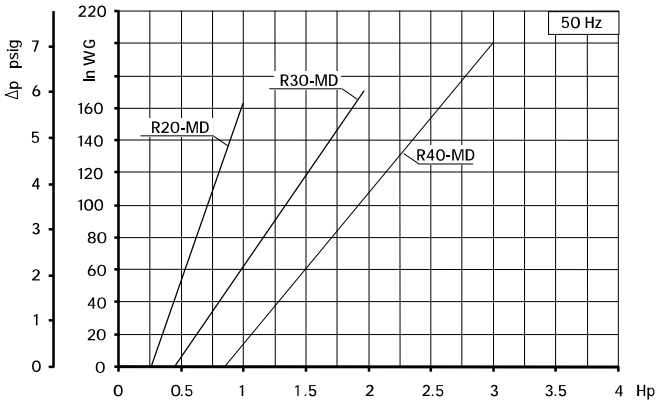

TEMPERATURE INCREASE

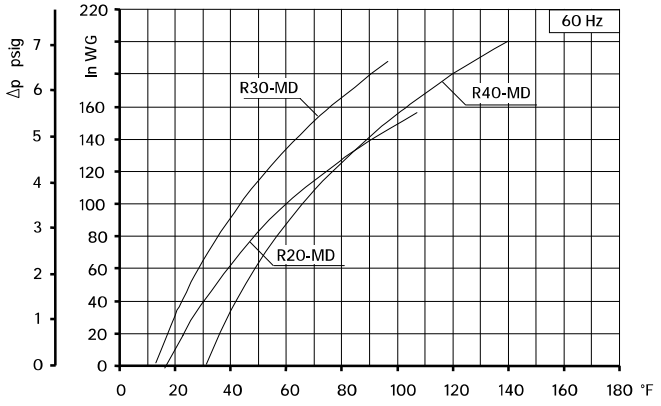

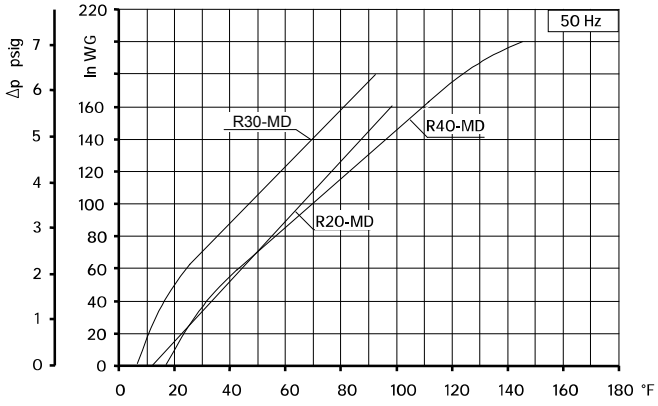

Curves refer to air at 68°F temperature and 29.92 In Hg atmospheric pressure (abs) measured at inlet port.
Values for flow, power consumption and temperature rise: +/-10% tolerance.
Data subject to change without notice.

Safety Valves

SN 1733 -7 1/1

The VRL valves are designed to protect blowers and / or motors from over pressurization or excess vacuum. When there is over pressurization, the valve opens and discharges to the outside. When there is excess in vacuum, the valve opens and takes flow from outside.

The valves have been designed for low pressure / low vacuum, with minimal difference between the initial value at which the valve begins to open and its fully opened position. The valves are supplied with 2 different springs to maximize their efficiency.
These compact valves, made of aluminum alloy, are both easy to install and calibrate, and operate in a wide range of capacities.
The VRL can be plumbed to divert excess primary flow through a secondary external outlet when working in pressure conditions, or to pipe in a secondary flow when working in vacuum.
"HP" valves are used for pressures >240" H2O.

Maximum efficiency is achieved by keeping operating values (flow versus pressure or vacuum) within the operating range (shaded area on graph). Capacity refers to air having a density equal to 0.075 lbs./cu.ft .



VRL6 VRL6 HP | VRL8 VRL8 HP | VRL9

OPERATING RANGE

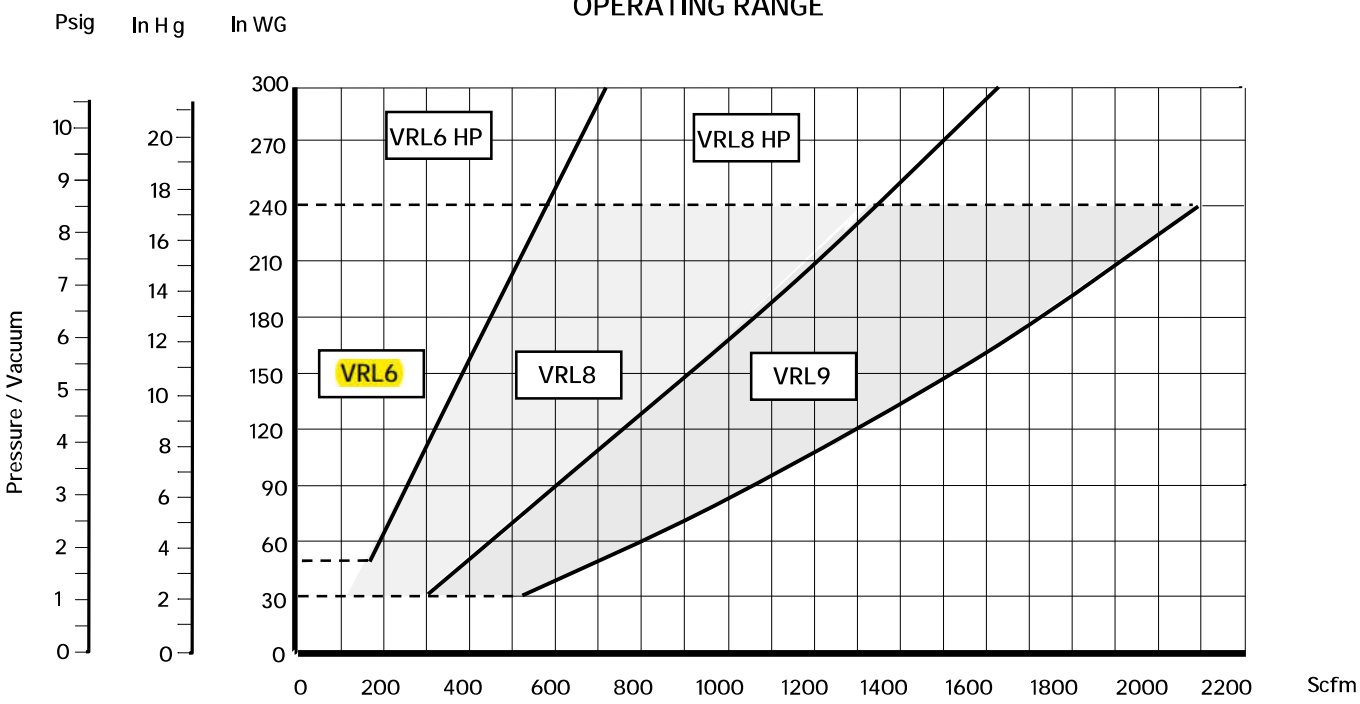

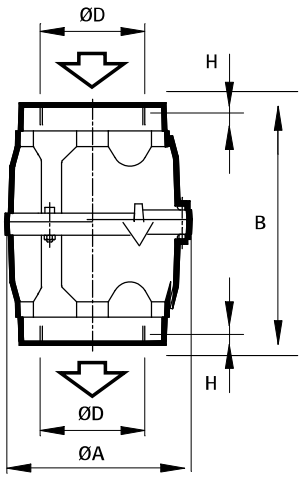

OVERALL DIMENSIONS

TYPE	ND	D	A	B	H	WEIGHT (Lbs)
VR6 & VRL6 HP	2"	2" NPT	4.02	6.90	0.47	1.9
VRL8 & VRL8HP	3"	3" NPT	5.31	7.48	0.59	4.2
VRL9	4"	4" NPT	6.30	8.11	0.71	5.7

- Dimensions in inches.
- Specifications subject to change without prior notice.

VRL valves are supplied uncalibrated - contact FPZ for calibration options.

FPZ, Inc. 150 N. Progress Drive Saukville, WI 53080 USA Tel. (262) 268-0180 usa@fpz.com www.fpzusa.com

Gauges, Check Valves, Silencers, Enclosures

SS1708

Gauges

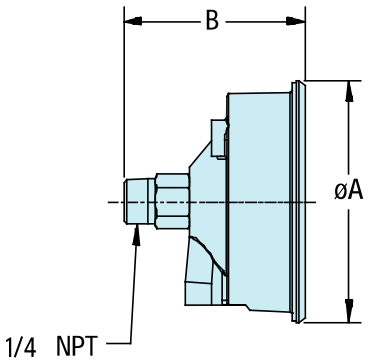

Gauges are important for monitoring the operating pressure or vacuum of the blower. Gauges should be positioned as close to the blower as possible.

*				

Dimensions in inches. Tolerance on given values ± 10% - unbinding and can be changed without prior notice.
*

Check Valves

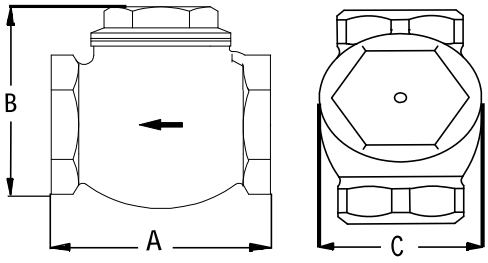

Swing check valves allow air to flow in one direction. These valves prevent backflow into the blower and are supplied in bronze or brass.

Dimensions in inches. Tolerance on given values ± 10% - unbinding and can be changed without prior notice.

Silencers

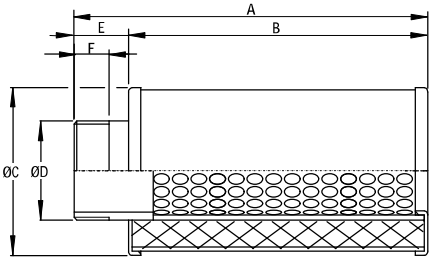

Silencers provide additional sound attenuation.

TYPE	D	A	B	C	E	F	lbs
SS 4	1" 1/4	7.5	5.5	2.8	2	0.6	0.8
SS 5	1" 1/2	7.9	6.7	3.1	1.2	0.8	1.1
SS 6	2"	9.1	7.9	3.5	1.2	0.8	1.3
SS 8	3"	19.1	15.7	6.0	3.3	0.8	4.8
SS 9	4"	18.3	16.9	6.7	1.1	0.8	9.9

Steel manufactured (apart from SI 9 / SS 9 - entirely in aluminium) with sound absorbing polyurethane element.
Dimensions in inches. Tolerance on given values ± 10% - unbinding and can be changed without prior notice.

Sound Enclosures

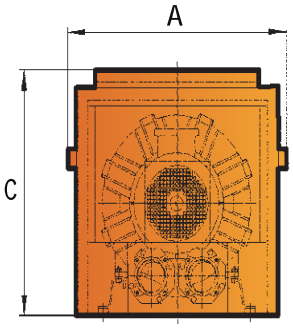

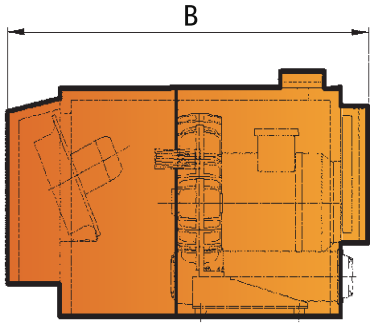

Part #	Used on models	A	B	C
IH1	SCL KO3-MS	13.4	18.2	15.8
IH3	SCL KO4-MS	14.3	19.7	16.5
IH5	SCL KO5-6 MS + 30-40DH	16.9	26.8	21.3
IH7	SCL KO7-8 MS / MD	31.7	64.4	26
IH8	SCL KO7-8 TD	31.7	64.4	26
IH9	SCL KO7-8 TS	31.7	64.4	26
IH10	SCL KO9-12 MS/MD	31.7	67.2	30
IH11	SCL KO9-10 TD	31.7	67.2	30
IH12	SCL K11-TD	31.7	67.2	30
IH13	SCL KO9-11 TS	31.7	67.2	31.5

Dimensions in inches - unbinding and can be changed without prior notice.

Inlet Filters

SS1905

FPZ inlet filters are used for pressure applications. The inlet filters combine filtration and sound attenuation into a compact package. Inlet filters consist of a filter cartridge enclosed by a carbon steel weather hood. Elements are easily serviceable by simply removing the weather hood.

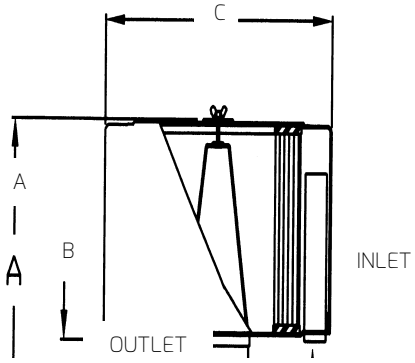

Dimension tolerance ± 1/8"



VG-020-013



FEATURES & SPECIFICATIONS

- Polyester: 99%+ removal efficiency standard to 5 micron. (Other media available upon request.)
- Fully drawn weather hood - no welds to rust or vibrate apart
- Tubular silencing design - tube is positioned to maximize sound attenuation and air flow while minimizing pressure drop
- Durable carbon steel construction with baked enamel finish
- Filter change out differential: 10"-15" H_2O Over Initial Delta P.

OPTIONAL DIRTY FILTER INDICATOR

The **VG-020-013** dirty filter indicator is used to maximize filter life for pressure applications only. The yellow indicator in the site window drops as dirt accumulates on the filter element. The element is ready for change out or servicing when the yellow indicator reaches the red zone. The filter condition can be determined without removing the weather hood even after the blower has been shut down.

The indicator can be mounted in the inlet piping between the blower and filter or directly to the filter housing by having a 1/8" npt tap installed in the hood. If a tap is required, FPZ part number **M020*** should be ordered.

Polyester Element	NPT	Dimensions (Inches) A	B	C	Used on Models	Approx Wt. Lbs
FS-15-050	½"	4	1 ½	6	10DL	2
FS-15-075	¾"	4	1 ½	6	15DH	2
FS-15-100	1"	4	1 ½	6	06	2
FS-19P-125	1 ¼"	6 5/8"	1 5/8"	6	K03-MS, R20-MD, R30-MD, R40-MD	3
FS-19P-150	1 ½"	6 5/8"	1 5/8"	6	K04-MS	4
FS-31P-200	2"	7 ¼"	2 ¼"	10	K05-MS, K05-TD	8
FS-231P-200	2"	12 ¼"	2 ¼"	10	K06-MS, K06-TD, K07R-MD, K08R-MD	14
FS-231P-300	3"	13"	3"	10"	K07-MS, K05-TS, K07-TD	15
FS-235P-300	3"	13"	3"	16"	K08-MS, K06-TS, K08-TD	29
FS-235P-400	4"	14"	4"	16"	K09-MS, K10-MS, K09-MD, K10-MD, K11-MD, K12-MD, K09-TD, K10-TD	30
FS-245P-400	4"	14"	4"	16"	K07-TS, K08-TS, K11-MS, K12-MS, K11-TD, K12TD	31
FL10**	NA	14 3/8"	1 3/8"	16 3/16"	K09-TS, K10-TS, K11-TS, K12-TS,	18

*M020 1/8" npt filter tap will be added to filter part number suffix if ordered.

**FL10 utilizes 15 micron paper element and does not include tubular silencers. FL10 filters are normally ordered with CA10

FPZ S.p.A.
Via F.lli Cervi 16
20863 Concorezzo (MB), ITALIA
Tel. +39 039 690981
info@fpz.com www.fpz.com

COMPRESSORI-ASPIRATORI A CANALE LATERALE — ISTRUZIONI — I
LATERAL CHANNEL BLOWERS-EXHAUSTERS — INSTRUCTIONS — GB



WARNING

Leggere e seguire le istruzioni prima dell'uso e conservare il manuale come riferimento per il futuro. Il mancato rispetto di tutte le istruzioni del produttore, inclusa l'installazione impropria o l'uso improprio del prodotto, le alterazioni del prodotto e/o il mancato utilizzo del prodotto in conformità al presente manuale, possono causare danni, lesioni gravi o morte. — I

Read and follow all instructions before use and keep manual for future reference. Failure to comply with all manufacturer's instructions, including improper installation or use of the product, alterations to the product, and/or failure to use the product in accordance with this manual can result in property damage, serious injury or death. — *GB*

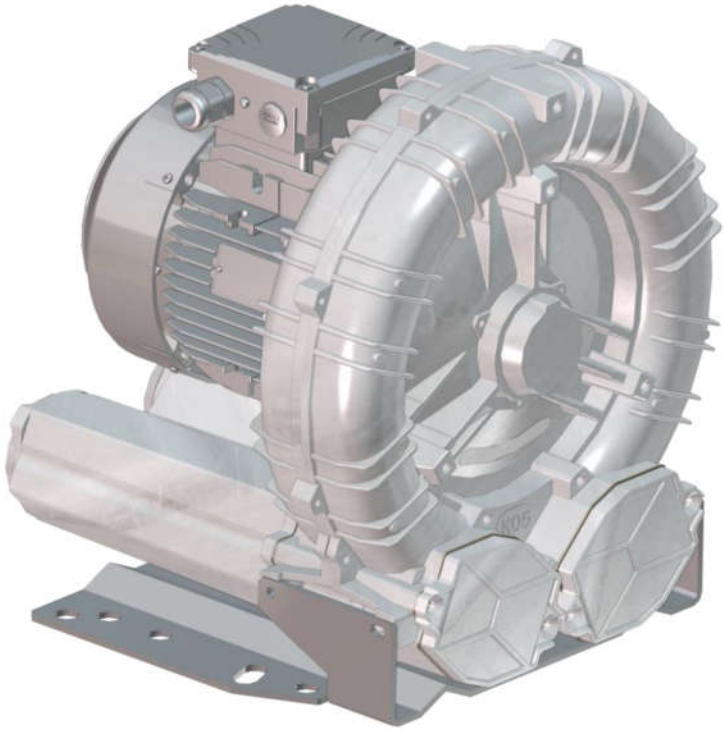

Per ulteriori informazioni o assistenza all'installazione, prego contattare:
For further information or assistance with installation, please contact:

@ service@fpz.com +39 039 690981

COMPANY WITH
QUALITY SYSTEM
CERTIFIED BY DNV GL
= ISO 9001 =

FPZ S.p.A.
Via F.lli Cervi 16
20863 Concorezzo (MB), ITALIA
Tel. +39 039 690981
info@fpz.com www.fpz.com

Table of contents

1 GENERAL INFORMATION 3
1.1 PURPOSE OF MANUAL 3
1.2 TECHNICAL DATA – NAMEPLATE 3
1.3 TESTING, WARRANTY AND LIABILITY 3
2 SAFETY RULES 4
2.1 IMPORTANT SAFETY INFORMATION 4
2.2 PROHIBITIONS 4
3 PROPER AND IMPROPER USE 5
3.1 OPERATING CONDITIONS 5
3.2 STANDARD SIDE CHANNEL BLOWER 5
3.3 ATEX BLOWERS (Category 3GD – Category 2G) 5
3.4 IMPROPER USE AND ASSOCIATED RISKS 6
4 STORAGE AND TRANSPORT 7
4.1 RECEIPT AND CHECK OF THE PACKAGE 7
4.2 HANDLING AND TRANSPORT 7
4.3 STORAGE 7
5 INSTALLATION 7
5.1 INSTALLATION CONDITIONS 7
5.2 BLOWER WITHOUT ELECTRIC MOTOR (GOR – GVR EXECUTION) 9
5.3 ATEX 2G BLOWER (EXCLUDED TMD VERSION) 9
5.4 GOR TMD ATEX 2G BLOWER 9
5.4.1 INSTALLATION OF SENSOR GOR TMD ATEX 2G BLOWERS 10
5.4.2 CONNECTION OF THE MECHANICAL SEAL FOR GOR TMD ATEX 2G BLOWER 11
5.5 ELECTRIC MOTOR 12
5.5.1 ELECTRIC CONNECTION 12
5.5.2 ELECTRIC MOTOR POWERED BY FREQUENCY CONVERTER 13
5.5.3 ROTATION DIRECTION 13
6 START UP AND NORMAL OPERATION 13
6.1 PRELIMINARY CHECKS 13
6.2 OPERATION 13
6.3 STOPPING 14
7 MAINTENANCE 15
7.1 MAINTENANCE AND FAILURE CONDITIONS 15
7.2 PERIODICAL CHECKS 16
7.3 ROUTINE MAINTENANCE REPAIR OF BREAKDOWNS 16
7.4 LIFESPAN OF BEARINGS 17
7.5 DISMANTLING AND DEMOLITION 17
8 RESIDUAL RISKS 17
9 TROUBLESHOOTING 18
10 REFERENCES 19
11 INSTALLATION DIAGRAMS 20

FPZ S.p.A.
Via F.lli Cervi 16
20863 Concorezzo (MB), ITALIA
Tel. +39 039 690981
info@fpz.com www.fpz.com

1 GENERAL INFORMATION

Read the manual for safety information on correct installation, operation and maintenance.

1.1 PURPOSE OF MANUAL

- The purpose of the manual is to complete the information contained in the *operative instructions* (Figure 1*)* supplied with the blower in order to give "instructions for use" to the skilled operator to prevent and minimize risks during the interaction between man and machine.
- For safe installation, carefully read this manual before installing the product and follow all instructions exactly as shown.
- The information was prepared by the manufacturer in the original language (ITALIAN) considering the content communication effectiveness for the interested parties also depending on the operator's qualifications and perspicacity.
- Keep the *operative instructions* (Figure 1*)* for the entire service life of the unit in a known and easy to access place to make it always at hand for reference.
- Any observations made by recipients can be an important contribution to improve the after-sales services provided by the manufacturer.
- The information contained in this manual is intended for use by specialized operators whose definition is contained in the document MAN_PIC (Figure 2).
- For electric components and motors that may be installed to the blower, please refer to the manuals of their own manufacturers.

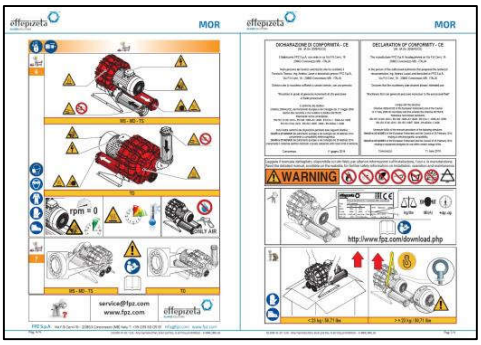

Figure 1 – *Operating Instruction*



Figure 2 - Document MAN_PIC

1.2 TECHNICAL DATA – NAMEPLATE

On the product nameplate are stated:

• Unit description • Performance (Noise [dB], Flow [m^3/h] and Pressure [mbar]) at 50 Hz and 60 Hz frequency referring to 20°C and 1013 mbar abs. • Serial number and year of manufacture • Reference Doc. (*Operating Instruction)* • Weight [kg/lbs] • Reference temperature for the working blower (T. amb.)	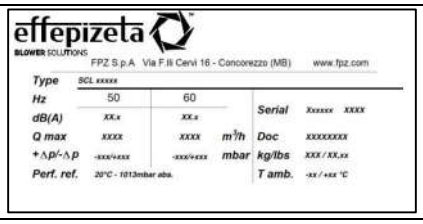

It is strictly forbidden to remove or tamper with the product label.

1.3 TESTING, WARRANTY AND LIABILITY

Testing and inspection

- The entire unit is sent to the customer ready for installation, after passing the tests and inspections required by the manufacturer, in conformity with the applicable laws and the mandatory technical standards.

Warranty

- Warranties are defined in the general terms and conditions of sale.

Liability

- See document MAN_PIC.

2 SAFETY RULES

2.1 IMPORTANT SAFETY INFORMATION

WARNING	**The instructions listed below must be read carefully and become a fundamental part of daily procedures in the normal use and maintenance of all the equipment, in order to prevent any kind of personal or domestic animals (even serious) injury (or death) or damage to equipment.**

- Do not start the unit until its operation is clearly understood.
- All installation, commissioning and maintenance operations must be carried out by specialized operators only (see doc MAN_PIC).
- Keep the area around the unit constantly free of obstructions.
- Use appropriate PPE (Personal Protective Equipment) such as boots, gloves, goggles and work clothes.
- Pay attention to all danger and caution signs placed on the unit.
- Do not wear clothes, jewellery or accessories that can get caught in the cooling fan of the electric motor or that can be sucked into the blower.
- Do not modify the electrical connections on the unit.
- Observe all local, state and national electrical codes.
- Before starting the unit and/or with weekly frequency, the operator must check the efficiency of the devices that ensure the operation of the unit and any other unit defects. In case of any defects, immediately notify FPZ S.p.A.
- Devices that ensure the operation of the unit must never be removed or rendered useless.
- During maintenance or repair work, it may be necessary to exclude some mentioned devices from the service. This operation must be carried out by specialized operators only (see doc MAN_PIC).
- Always apply and enforce the safety rules; in case of any doubts, always consult this manual before acting.

WARNING	**Non-compliant installation with the unit's intended use can cause personal (even serious) injury (or death) or damage to equipment.**

The unit must only be started:

- in conformity with the purposes of use, transport and handling specified in "FORESEEN USE";
- respecting the values given in the nameplate data.

2.2 PROHIBITIONS

WARNING	**Failure to comply the following PROHIBITIONS can cause personal (even serious) injury (or death) or damage to equipment.**

- NEVER suck up and convey aggressive, corrosive, and/or harmful fluids.
- NEVER use the unit under conditions that differ from those indicated on the nameplate.
- NEVER use the unit without having installed a suction filter.
- NEVER operate with the suction and/or delivery openings closed.
- NEVER make conversions or changes to the unit, maintenance or repair work on one's own initiative or not envisaged in the manual. Maintenance work can be carried out only in compliance with what is described in this user manual, exclusively by specialized operators (see document MAN_PIC).
- NEVER use the unit in places where ATEX classification does not comply with Annex II of Directive 1999/92/EC.
- NEVER use the unit without having first installed and connected the sensors and/or regulators required to the plant and correctly installed and checked the seal system of the machine.
- NEVER use the unit with ambient temperatures below -15°C (+5°F) and above +40°C (+104°F).
- NEVER use the unit before ensuring correspondence between grid voltage and motor label voltage.

3 PROPER AND IMPROPER USE

3.1 OPERATING CONDITIONS

WARNING **Failure to observe the temperature, altitude, differential pressure and filtering modes for design and operation specifications there can be an impeller break which can cause personal (even serious) injury (or death) or damage to equipment .**

- The maximum permissible differential pressure indicated on the product nameplate must never be exceeded.
- It is important to install the unit at a maximum altitude of 1000 m (3300 ft.) above sea level, for higher altitudes contact FPZ.
- The unit is designed to operate at ambient temperature between -15°C (+5°F) and +40°C (+104°F).
- In case of suction in the environment or on the plant, protect the suction pipe using a suitable filter with a maximum degree of filtration of 25µm. Contact FPZ for filters with a different filtration degree. Check the compliance with the data of maximum pressure/vacuum listed on the nameplate. For ATEX blower we recommend an ATEX filter with a filtration degree of 20 µm / 25 µm.
- Installation, operation and maintenance of the blower must be carried out by specialized operators (see document MAN_PIC). Due to incorrect maintenance or an unauthorized modification, a non-compliant condition of use is determined, so the responsibility lies with the customer or end user.

NOTICE If installed outdoors, protect the unit against exposure to sunlight and to atmospheric agents.
If the flow rate has to be reduced, use a draw-off valve rather than throttling back the suction or delivery lines.

3.2 STANDARD SIDE CHANNEL BLOWER

FPZ side channel blowers / exhausters are designed to generate vacuum and overpressure for conveying non-explosive, non-flammable, non-dangerous gases and air in continuous use in a non-explosive environment. Side channel blowers are not designed to transport dusts of any grain size.

FPZ side channel blowers / exhausters are designed and built for use in industrial plants and are equipped with three-phase or single-phase asynchronous bipolar electric motors in compliance with IEC 60034-1.

3.3 ATEX BLOWERS (Category 3GD – Category 2G)

Atex blowers are designed and built in accordance with 2014/34/UE Directive and European standards EN 1127-1, EN 80079-36, EN 80079-37, EN 14986, considering the compatibility of unit components with treated fluids (contact FPZ for components compatibility details). Accessories and monitoring systems linked to the unit have to be compliant with 2014/34/UE Directive.
It is recommended that the connections and suction and delivery pipes are in metal or antistatic material.

Units are group II devices for use in environments classified as explosive for the presence of Gas (G) zone 1/2 and/or Dust (D) zone 22.

- For motors that may be installed to the blower refer to the Atex complementary instructions of the motor manufacturer.
- In case the blower is disposed vertically, thus standing on the cover, foreign objects shall be prevented from falling into the ventilation openings. If necessary the motor can be provided of a fan cover with protecting canopy.
- If not specifically indicated, the ATEX label refers to the equipment “indoor” and “outdoor” area.
- In the case of a double indication separated by the “/” symbol, the first number indicates the “indoor” category (internal surface of the blower), the second number the “outdoor” category (outside of the blower, including the electric motor).
- The blower protection mode is constructive (“EX **c**”).
- Electric motors have different protection modes depending on the category and the environment they are designed for.
- All “2G” e “3/2G” configurations have explosion-proof motors (EX d protection).
- Classification of work zones:

1	Use of blower for conveying flammable gas	**Equipment with internal potentially explosive atmospheres, intended for use in areas that are not classified**	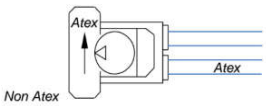
2	Use of blower for conveying non-hazardous fluids in ATEX classified environment	**Equipment with internal non-explosive atmospheres and intended for use in areas that are classified**	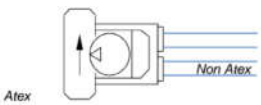
3	Use of blower with suction of ambient air and operating in a classified zone	**Equipment with internal explosive atmospheres, interfaced with process atmospheres and intended for use in areas that are classified**	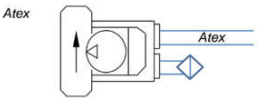

3.4 IMPROPER USE AND ASSOCIATED RISKS

WARNING **Non-compliance with the unit's intended use or with prohibitions/obligations can cause personal (also serious) injury (or death) or equipment damage.**

- Listed below are some improper uses, identified through risk assessment and experiences. Improper uses are subdivided according to the conditions that they may generate.
- The list is a non-exhaustive and representative example of improper use and associated risks.

IMPROPER USE	POSSIBLE CONSEQUENCES	RISKS
IMPROPER USE LINKED TO NORMAL OPERATION		
Absence of cyclic monitoring and control.	Anomalous operation not detected / hidden.	Risk of damage to the unit, with possible injury (or death) for the operator if present nearby.
Different installation with respect to manufacturer's suggestion.	Yielding / break of fastening points.	Risk of damage to the unit, with possible injury (or death) for the operator if present nearby. The unit may fall or be subject to damage due to incorrect load at support.
Operation outside the performance indicated on the blower and electric nameplate.	Seizure of the impeller.	Risk of damage to the unit, with possible injury (or death) for the operator if present nearby. The unit may break.
Proceeding at all stages without consulting the *operating instructions* and this manual.	Using the unit for unforeseen purposes and without considering the associated risk factors.	Risk of damage to the unit, with possible injury (or death) for the operator if present nearby.
IMPROPER USE LINKED TO METHODS OF USE		
Use of a fluid different from that indicated / forbidden.	Incorrect workload.	Risk of damage to the unit, with possible injury (or death) for the operator if present nearby. The unit may break.
Physical load applied to the machine (no element excluded).	Breakage and/or presence of leakage of fluid collected.	Risk of damage to the unit, with possible injury (or death) for the operator if present nearby due to inhalation of harmful substances.
IMPROPER USE LINKED TO THE STOPPAGE OF A BLOWER		
Manipulation of the machine still rotating / moving.	Direct contact of the operator with moving parts and with the surface unit still hot.	Risk of possible injury for the operator such as burns and entanglement.
Disconnecting the unit from the electricity with the voltage inserted.	Direct contact of the operator with the live parts.	Risk of possible injuries for the operator through electrocution.
IMPROPER USE LINKED TO MAINTENANCE WORK		
Handling the machine differently from instructions for use.	Falling or sudden movement of the unit.	Risk of damage to the unit, with possible injury for the operator if present nearby.
Use of liquid during unit cleaning operations.	In case of stagnation, characteristics of the material may be compromised.	Risk of damage to the unit, with possible injury for the operator if present nearby.
Use of types of spare parts different to those supplied by FPZ.	Different performance from design (pressure, noise, vibration, sealing).	Risk of damage to the unit, with possible injury for the operator if present nearby.
BREAKDOWN AND EMERGENCY CONDITIONS		
Not stopping the machine when it is making an unusual noise.	Seizure of the impeller and overheating of the unit and of the electric motor.	Risk of damage for the unit, with possible injury (or death) for the operator if present nearby. The unit may break down.

4 STORAGE AND TRANSPORT

4.1 RECEIPT AND CHECK OF THE PACKAGE

- When receiving the unit, it is necessary to check that the packaging is intact and free from signs of damage due to transport or storage conditions.
- In the case of damage to the packaging, immediately inform the shipping agent and the manufacturer.

4.2 HANDLING AND TRANSPORT



Danger of crushing and / or impacting various parts of the body

During the transport and handling phases due to the sudden drop or displacement of the packaging, there may be a risk of crushing and / or impacting various parts of the body. During the activities around the unit, the operator may fall due to stumbling or slipping.
Use equipment compliant with the laws and follow the handling and manual handling procedures described in the operating manual, based on the weight indications on the packaging and in accordance with applicable regulations in the state in which this activity takes place. Use safety shoes during this phase.

4.3 STORAGE

- Store in a dry place, possibly keeping the machine in the packaging.
- Do not remove the protective covers of the openings.
- In the event of long-term storage, remove dust deposits on external surfaces and, before commissioning, check the unit's functional status with a start-up test.

5 INSTALLATION

5.1 INSTALLATION CONDITIONS



Commissioning and operation must only take place under the following installation conditions:

- The unit must be completely assembled and intact (not damaged or tampered).
- Silencers must be connected to the pipe system (see *operating instructions*); if silencers are not present, make sure that the connection is made by flexible sleeve.
- The machine must be securely fastened to the predetermined site and in the recommended modes (see *operating instructions*).
- The motor must be connected to a suitable control panel.
- Ensure the visibility of the unit installed from the position of the control elements.



Danger of ejection of objects

The entry of foreign bodies into the unit, even if very small, can cause personal serious injury (or death) and/or equipment damage with probable breakage of the impeller blades, including the danger of debris can be thrown out of the machine violently.
Remove the closure caps from the silencers and connect the pipes of the system, making sure to carry out the operation in a non-dusty area to prevent the entry of foreign bodies.



Danger of crushing and / or impacting various parts of the body

During the installation phase due to the sudden drop or displacement of the packaging, there may be a risk of crushing and / or impacting various parts of the body. During work around the unit, the operator may fall due to stumbling or slipping. Use the appropriate device (e.g. toe) to hook and lift the unit properly.



Danger of injury to upper limbs

The risk of injury to upper limbs may arise due to a combination of hazards during the mechanical assembly phase and the connection of the machine to the piping. Observe the operating manual to install the unit safely.

- The support surface of the unit must be flat, robust, stable and absolutely levelled.
- It is important that the unit is installed on supports that do not transmit vibration for example structures or antivibration

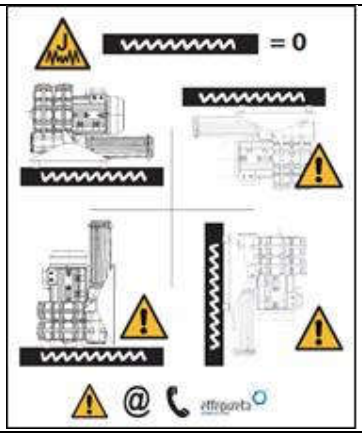

- Connect the pipes with flexible sleeves and avoid the unit bears pipes weight; except for the filter in the case of suction in the environment.

Size the pipes and choose accessories that minimize the load losses, therefore:

- do not fit pipes with diameters smaller than those of the machine's outlets and inlets;
- install multiple machines in parallel, sizing the manifold and main line proportionally;
- do not use angle-pipe, but bends with a large radius of curvature;
- do not install valves with passages smaller than the nominal value and check valves with a stopper pushed by a spring (the check valve with the lowest load loss is the type with a light disc);
- in the case of use for oxygenation, choose low-resistance diffusers (low load loss).

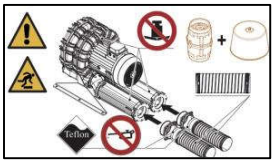

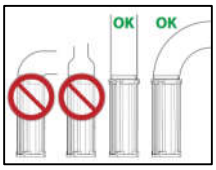

⚠WARNING	To avoid overloads caused by pressure variations, it's recommended that you install a relief valve on aspiration in the case of operation as suction, and on discharge in the case of operation as a compressor.
⚠WARNING	If you need to reduce the flow rate, use a branch valve instead of throttling the suction or discharge.
⚠WARNING	Protect the intake duct with a suitable filter with a filtration degree of 25 µm. Foreign bodies are: dust, sand, calcite, impurities in the pipes, cutting blades and shavings, drops and waste from welding, metal burrs, and residues of sealants produced during connection of pipes. Replace the filters regularly.







- When installing outdoors, protect the unit against direct exposure to the sun and atmospheric agents. For outdoor installations without the use of protections contact FPZ S.p.A..
- Ventilation of the motor must not be hampered by obstacles placed in the immediate vicinity. For this purpose, the electric motor air intake must remain free and a minimum distance between the electric motor fan cover and any other structure as defined by the manufacturer of electric motor.
- The unit must be installed at a maximum height of 1000 m a.s.l., for different conditions contact FPZ S.p.A..

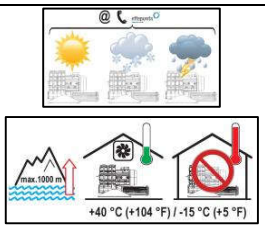

The ambient temperature, and the conveyed gas intake temperature, is permissible inside the range -15°C (+5°F) ÷ +40°C (+104°F) with the following provisions:

- For ambient temperature +30°C (+86°F) **reduce** the maximum pressure differential given in the Data Sheet by 5%;
- For ambient temperature +40°C (+104°F) **reduce** the maximum pressure differential given in the Data Sheet 10%.

The graph on the right has to be used to reduce the maximum pressure differential in case of ambient temperature between +21°C and +40°C (+70°F and +104°F)

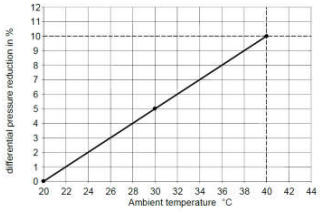

- Check dimensions to allow adequate space for installing the unit with its accessories and ensure sufficient ventilation of the electric motor.

⚠WARNING	In the case of ATEX side channel blower intended for classified areas, the unit must be installed outdoors or in an air conditioned environment.

5.2 BLOWER WITHOUT ELECTRIC MOTOR (GOR – GVR EXECUTION)

NOTICE

Units supplied without an electric motor, GOR execution (with horizontal coupling) or GVR (with vertical coupling) are considered as partly completed machinery, so the designer has to check the compatibility of the electric motor chosen with the data in the data sheets downloadable from the website.
During installation and maintenance, to install or dismantle the elastomeric coupling; it is recommended not to use a hammer, but pushers or extractors, to fit or remove the coupling flanges from the shaft. . Percussion can damage the slope of the bearings by reducing their durability. Coupling requires axial and angular alignment accuracy. Also refer to the coupling instruction manual.

5.3 ATEX 2G BLOWER (EXCLUDED TMD VERSION)

The blower is arranged for the installation of measurement/control systems in order to prevent machine faults that can produce potential sources of triggering:

- pressure sensor
- temperature sensor.



Danger of explosion. The unit is designed to convey flammable gas and is sealed. Do not start the machine before connecting and activating the unit and surveillance system

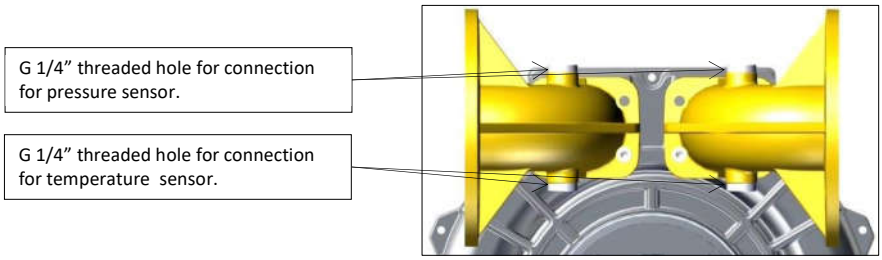

Pressure sensor



ALWAYS use a pressure sensor

Given the likelihood of an explosive atmosphere, the use of pressure measuring instruments is compulsory in order to check that the difference between the delivery and suction pressures respects the levels given in the "specifications" and on the machine's rating plate.

NOTICE

The use of an alarm and stop device (non-automatic reset) that automatically shuts off the power to the machine is advisable.

Temperature sensor

A possible temperature sensor is deemed functional for the customer's measurement needs, but can in any way replace the pressure sensor for monitoring any dangerous machine conditions.

WARNING

All the sensors must be protected against possible impacts, damage and atmospheric agents.

5.4 GOR TMD ATEX 2G BLOWER

The blower is designed for the installation of control systems which must be set up by the installer for the purpose of monitoring machine breakdowns which could produce possible sources of combustion:

- vibration sensor;
- pressure switch / vacuum switch;
- thermostat.

The mechanical seal installed also requires the following operations:

- refilling of the oil tray, as indicated below;
- connection of the oil level sensor.

If necessary, in order to avoid overloads caused by pressure variations, provide a vent device in conformity with EN 1127-1 branching off from the suction pipe, in the case of operation as a suction pump, and on the delivery pipe, in the case of operation as a compressor.

5.4.1 INSTALLATION OF SENSOR GOR TMD ATEX 2G BLOWERS

Install the machine on the plant. Fit the sensors (suitable for the purpose and especially for the Atex environment in question) in their places and connect them to the control system as specified in the instructions provided with the sensors and as required in the plant diagram:

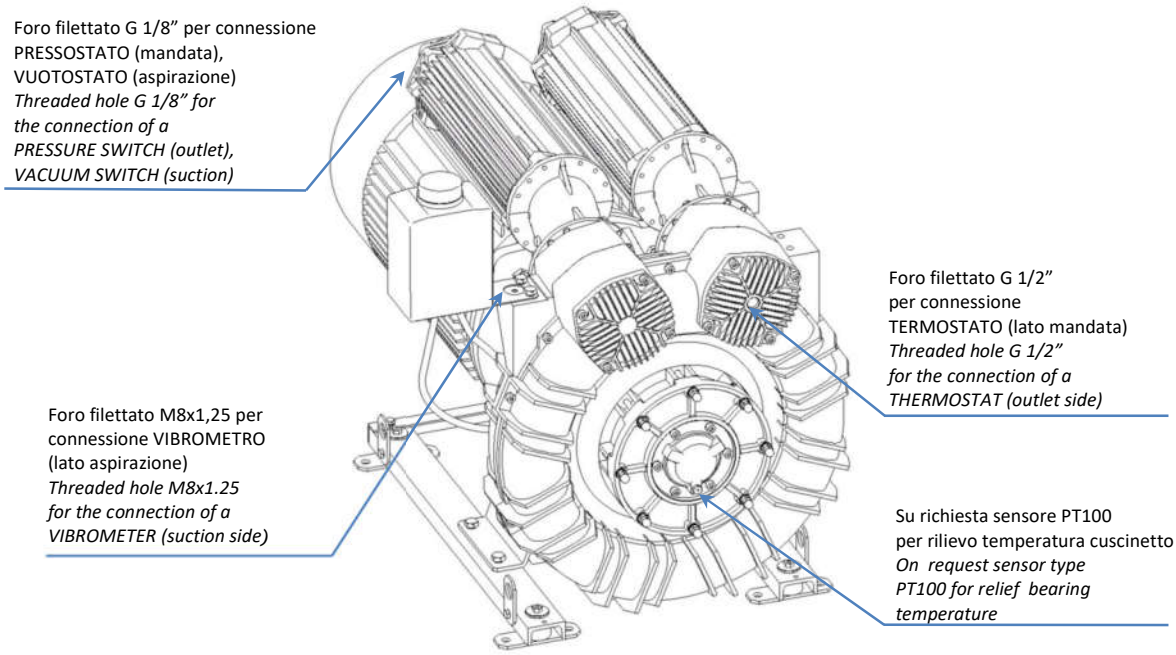

- Vibration sensor

The signal from the sensor must monitor the vibrations of the machine constantly. This signal must be connected to an alarm and block device with manual reset, which automatically interrupts the power supply to the compressor/suction pump at the moment the level of the vibration signal exceeds the predetermined limits.

Effective vibration velocity value [mm/s]	***Class I*** (≤ 15kW)
a<**2.2**	***A***

Effective vibration velocity value [mm/s]	***Class II*** (> 15kW)
a<**3.5**	***A***

- Pressure switch and vacuum switch

The pressure or vacuum switch installed must be calibrated to the maximum pressure or vacuum level specified on the plate of the machine or in accordance with the operating limits of the plant.
The signal must be connected to an alarm and block device, with manual reset, that automatically interrupts the power supply to the machine.

- Thermostat

The thermostat must be set to come on at a temperature not exceeding 125°C to interrupt the power supply to the machine automatically.
The signal must be connected to an alarm and block device, with manual reset, that automatically interrupts the power supply to the machine.

⚠WARNING **All sensors installed must be protected against impact, damage and weathering**. FPZ can supply a protective casing, on request and after receiving the dimensions of the sensors installed.

5.4.2 CONNECTION OF THE MECHANICAL SEAL FOR GOR TMD ATEX 2G BLOWER

	**Danger of slipping**
Oil spills can make the floor slippery. Clean the floor with absorbent and /or degreasing products.	

	**Danger of electrostatic charges**
Do not clean or rub the oil reservoir with dry clothes.	

- Refilling the cooling oil tray

Refill the cooling circuit of the mechanical seal. For good circulation of the cooling liquid, it is important not to have air bubbles inside the circuit. To achieve this, refill by pouring the liquid into the vessel repeatedly in small amounts without exceeding level (B) of the return line. Top up completely only when the level at the return line has covered the bottom of the vessel.

The cooling liquid must be kept at least 10 mm above the level of the return line (B); top up as necessary.

Recommended cooling liquid:	SAE 10W-40 oil Or SAE 5W-40 oil
First filling quantity:	Approx. 1,5 kg

A small leak of fluxing liquid is normal, especially when the seals are settling down.

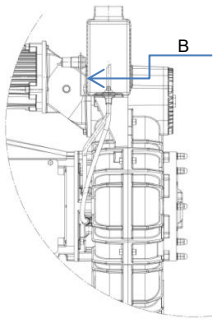

- Connection of the cooling oil level sensor

The capacitive oil level sensor consists of a stainless steel cylindrical body and is suitable for use in explosion risk zones. It is fitted with a potentiometer to regulate sensitivity and a LED display on the back end, which is normally on.

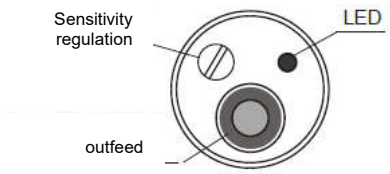

This sensor must be connected to an alarm and block system with manual reset which automatically interrupts the power supply to the machine. Connect the sensor to the control system following the specific instructions enclosed with this manual.

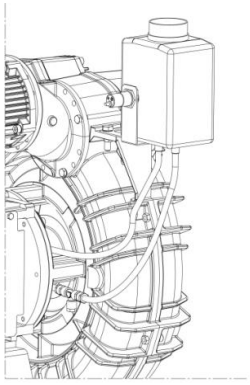

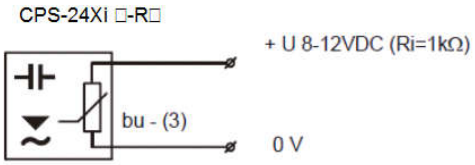

Note: the connection cable must not be cut or tampered with.

5.5 ELECTRIC MOTOR

WARNING	**Comply with safety measures and instructions indicated in the instruction manual for the electric motor.**

Before starting working on the unit or system, the following precautions must be taken:

- make sure that the unit is NOT connected to electrical power mains;
- take precautions to prevent electricity from being reconnected;
- open the terminal box only after making sure that there is absolutely no live current.

	Danger due to electricity

- If connecting operations are carried out without removing the voltage from the electrical system or without setting up a system to avoid reinsertion, direct contact between the operator and the live parts can occur. This can also cause personal serious injury (or death).
- Work on electrical equipment (installation and maintenance) has to be done only by specialized operators (see document MAN_PIC), wearing PPE.
- In the event of contact with a defective unit there is a risk of electrocution. Always have seals and electrics checked regularly by a specialized operator (see document MAN_PIC).
  - The terminal box must not contain foreign bodies, impurities or humidity. Close the terminal box with the cover, and seal the cable gland openings to prevent dust, water and humidity from getting inside.

NOTICE	In the case of several motor starts during an hour, there is a limitation of 6 start-ups per hour, evenly distributed; failure to respect this can severely damage the unit.

5.5.1 ELECTRIC CONNECTION

Incorrect motor connection may seriously damage the unit.

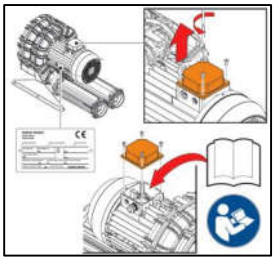

- Check that the details on the data plate are compatible with the line voltage and frequency.
- Always connect the motor's earth cable to the relevant terminal marked with this symbol before connecting to the mains supply and check the dispersion capacity. The earth cable can be recognized by its color (yellow/green).
- Connect the machine to the earth system too, using the specific hole (marked with the relative symbol) located on the base of the unit. Connection to the power grid must be carried out in compliance with what is shown in the diagram inside the terminal box.
- Use the cable gland openings to allow power supply cables to pass into the terminal box.
- Proceed to tighten the power supply cables, taking the section of the electrical cables into account each time.
- The terminal boards for the electrical connections must be tightened properly to avoid high contact resistances and resulting overheating.
- Check that the insulation gaps between the various conductors are kept in the air and between surfaces, as indicated in the standards.
- All the screws used to close the terminal board must be tightened properly. Damaged screws must be replaced immediately, using screws of the same or better quality.

The connection must guarantee:

- long-lasting safety;
- that no wire ends are sticking out;
- protection with a (thermal or amperometric) trip switch is essential for dealing with risks of overloading, a loss of one phase in the mains supply, excessive voltage fluctuations, or the rotor getting stuck;
- that the motor trip switch has been set to a value that does not exceed the maximum current level shown on the nameplate. Warning: the trip switch does not always protect the blower in case the maximum pressure differential is exceeded. Verify the maximum pressure or vacuum as per chapter 6.2.
- motors may be equipped with thermal protectors PTO or PTC. To avoid that the motor is damaged by temperature rise over the admissible limit: PTO or PTC have to be connected to a suitable cut off device that opens the line that feed the motor itself.
- if the application requires protection against accidental start-up, this must be carried out on the electrical control circuit of the motor.

5.5.2 ELECTRIC MOTOR POWERED BY FREQUENCY CONVERTER

The unit's nominal pressure or vacuum characteristics for service at mains frequency cannot be maintained if the unit is powered via a frequency converter. Contact FPZ S.p.A. for information about the performance of a unit powered by a frequency converter. Download from the website www.fpz.com the "RPM Table" of your blower and do not exceed the maximum pressure differentials shown for every rotation speed.

When power is supplied with a frequency converter, the installer is responsible for:

- respecting the laws;
- checking with FPZ assistance if the motor can be powered by a frequency converter, if it doesn't appear on data sheet;
- checking and making any measures necessary to comply with the immunity and emission limits set by the standards;
- checking the suitability of the plant and the frequency converter for operation with standard motors (class F), or the need to use specific motors for these types of operation.

5.5.3 ROTATION DIRECTION

The machines must be used respecting the rotation direction indicated by the arrow on the electric motor fan cover.

- To check the rotation direction, switch the motor on briefly and observe the fan.
- To change the rotation direction, invert the power cable connections, leaving the earth connection unchanged.

Refer to the connection diagram located inside the terminal box and to this section.

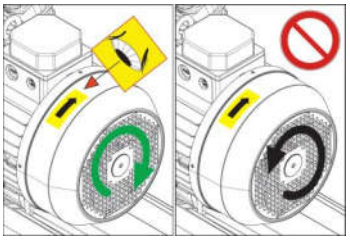

6 START UP AND NORMAL OPERATION

6.1 PRELIMINARY CHECKS

WARNING! Before starting the machine for use, carry out the following preliminary checks:

- if the unit has not been started up for some time, check its condition and, if necessary, remove any dust from the external surfaces, to avoid compromising the heat dissipation during the unit work;
- deactivate/open any pipe closing devices (shut-off valves, solenoid valves, etc.) before starting the unit;
- never start and operate the unit with the inlet and/or outlet ports closed;
- make sure the ambient and conveyed gas suction temperatures come within the levels: -15°C (+5 °F)÷ +40°C (+104 °F);
- check the operation of any flow control/limiting devices (not supplied).

6.2 OPERATION

- If the side channel blower is put into operation without being fixed to a surface, a sudden displacement of the starting torque on ignition of the electric motor may occur.
- The information on the product nameplate must always be considered when commissioning and operating.

The unit can be started for use after carrying out the preliminary checks

- Start the unit by switching on the power to the electric motor.
- Respect the maximum pressure differential stated in the blower's nameplate.
  To evaluate the pressure differential Δp across the blower take into account:
  - For compression operating: add up to the outlet pressure the inlet vacuum if applied.
  - For vacuum operation: add up to the inlet vacuum the outlet pressure if applied.
- Pressure losses in the pipes are often underestimated but are decisive factors for the operating differential pressure.
- Measure the motor absorption and check compliance with the rated nameplate value. An amperage below nameplate does not always guarantee that the blower is not exceeding the maximum permitted pressure differential.

WARNING	**Non-compliance with the unit's use or with prohibitions/obligations can cause personal (also serious) injury (or death) or equipment damage**

	Danger of burns

Danger of burns caused by contact with hot surfaces of the unit, which at start-up and operation may reach high surface temperatures, as specified on the product nameplate.
Apply adequate PPE against the risk of burns.



Danger of suction

Danger of injury due to depression, which can cause a sudden suction of objects, hair and clothes.
Start the machine only if it is properly connected to the system.



Danger of vibration

Regularly check that the unit is firmly fixed to the support frame.
Excessive vibration of the unit can cause serious damage to the machine, such as the seizure of the impeller.



Danger due to noise

Some machines can produce loud noise, even over 80 dB (A).
Reference levels are shown on the table of characteristic data that does not consider environmental reverb.
Warning to be taken:
Measure the acoustic pressure of the machine in the installation environment.
In the case of levels above the threshold defined by local standards:

- report the noise hazard
- prepare the use of PPE
- isolate the environment



Danger of ejection of objects

- Danger due to exceeding performance levels that may cause seizure of the impeller.
  Check that operating conditions are in accordance with values declared on the nameplate.
  Avoid operating with the inlet and/or outlet ports closed even temporarily.
  Install a limit valve or equivalent circuit that can avoid excessive vacuum and / or overpressure and allow the compliance with levels shown on the product plate
- Danger of injury due to objects and fluids aspirated and thrown at high speed (injury to the skin or eyes).
  Only start the unit (first start) if it is properly connected and check it accurately.
  In the case of unusual noise from the impeller, switch off the unit immediately and check it accurately.



Danger of injury to upper limbs

During the start-up (first start) phase due to a combination of hazards, the risk of injury to upper limbs may arise.



Danger of sudden leakage and/or aspiration of fluids (even harmful ones)

They could cause damage to the respiratory system due to the leakage of gas while the unit is in use and/or the slowing down of connection to the gas flow circuit.



Danger due to a limited view of the place in which the unit is installed.

Make sure you always have the unit installed in your sight while carrying out any activities close to it.

6.3 STOPPING

- The unit must be stopped by switching off the power supply to the motor.
- On shutdown, make sure to operate the unit with open outlet (suction / delivery) for about 20 minutes. This operation allows the removal of any condensation inside.

7 MAINTENANCE

In order to prevent faults and damage it is important to check periodically the units in operation; therefore it is advisable to adopt a maintenance plan in line with this manual, providing for:

- periodical checks;
- periodical maintenance.

7.1 MAINTENANCE AND FAILURE CONDITIONS

WARNING **Before starting any maintenance, either periodical or due to malfunction, take the following safety measures in order to prevent personal (also serious) injury (or death) or equipment damage:**

- unplug the unit from the power supply by unplugging the main switch;
- apply a sign to the system and to the control unit **"DANGER! Maintenance work in progress";**
- cool the unit for at least 15 minutes;



- wait until the unit has completely stopped, checking through the motor fan that the impeller is not rotating;

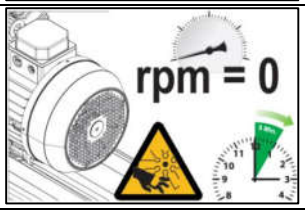

- make sure that there is no depression or overpressure in the unit through a pressure gauge and make sure that no fluid can escape from the unit (through its stopping) and / or the system (through its insulation).

Danger due to electricity

- If connecting operations are carried out without removing the voltage from the electrical system or without setting up a system to avoid reinsertion, a direct contact of the operator with live parts can occur. This can also cause personal serious injury (or death).
- Work on electrical equipment (installation and maintenance) must be done only by specialized operators (see document MAN_PIC), wearing PPE.
- In the event of contact with a defective unit there is a risk of electrocution.

Danger of moving parts

High risk of cuts caused by rotating impellers. By removing the manifolds or blind flanges, it is possible to access the rotating impeller through the openings of the body and the cover of the side channel blower.
Never put your hands or objects through the openings.

Danger of burns

Danger of burns caused by contact with hot surfaces of the unit, which at startup and in operation may reach high surface temperatures, as specified on the product nameplate.
Apply adequate PPE against the risk of burns.

Danger of injury to upper limbs

During the maintenance phase due to use of improper tools, lack of PPE, bad illumination of the workplace or unauthorized start-up, the operator fails to perform the required procedures, the machine can be put into unmanaged operation, and the risk of injury to upper limbs may arise.

Danger due to noise

Some machines can produce loud noise, even over 80 dB (A) therefore the operator may be subject to acoustic pressure which may cause buzzing in the headset and reduced attention.

WARNING **Danger of sudden spillage of gas (also harmful) suction**

Respiratory damage could occur due to gas leakage during operation and / or loosening of the connections to the gas flow circuits.

7.2 PERIODICAL CHECKS

In order to avoid any defects that may directly or indirectly cause damage, it is important that the unit is inspected by specialized operators (see document MAN_PIC).

A) When the unit is running, routinely carry out the following checks:

- delivery temperature;
- operating pressure and/or vacuum;
- electric motor current absorption;
- vibrations;
- state of the filter and related load loss.

WARNING	**Danger of seizure of the impeller due to excess vibration. Vibrations above the threshold (see table below) are considered NOT eligible and can cause damage to the machine and consequently personal injury even serious (or death) and / or damage to things.** **In the event of unusual noise and / or vibration over parameters, that may indicate the possibility the impeller is seizing up, turn off the unit immediately.**

Class I (Blower with electric motor of power ≤15kW)	Class II (Blower with electric motor of power >15kW)
a > 2,2	a > 3,5
a = effective vibration speed level [mm/s]	

Changes to normal working conditions (power ups, abnormal noise, vibrations, excessive overheating of the service fluid) are indications that the units is not working properly.

B) With the unit stopped and cooled, periodically carry out the following checks:

- dust: check and remove deposits from the external surfaces of the unit;
- suction filter (if fitted): every 10-15 days, check and clean or replace the filter cartridge. The dirty cartridge creates strong suction resistance and consequently a higher pressure differential, power absorption and operating temperature;
- for unit supplied with elastic joint, check the condition of the elastic joint as indicated in its operating manual;
- condensation discharge (if present): every 8-10 days, turn the yellow valve counterclockwise 90° to allow draining of the condensation that has built up inside the blower;
- check for oil leaks (TMD version) near the joint; if leaks are found, maintenance work must be scheduled to replace the seals.

7.3 ROUTINE MAINTENANCE REPAIR OF BREAKDOWNS

See the following chapter “TROUBLESHOOTING” for identifying possible critical situations and types of breakdowns.
Always disconnect the unit and remove it from the plant to do routine maintenance, cleaning and replacing components and in the event of a breakdown.

WARNING	**Danger due to residual overpressure or drop in pressure:**

- with residual overpressure, process fluids can leak, with the risk of injury to the skin and eyes;
- with a drop in pressure there is the risk that hair and clothes can be trapped;
- disconnect the unit only after closing and bleeding the system connected to it.

7.4 LIFESPAN OF BEARINGS

Under normal operating conditions, the bearings of the unit must be replaced by a specialized operator (see document MAN_PIC), after a time fixed by the manufacturer (see details in the table below).

NOT ATEX BLOWERS

Every model, except the models at the following line	25000 hours or 3 years
e07 / e08 / e09 / e10 / e11 MS – TS – TD	40000 hours or 5 years

SOFFIANTI ATEX

Every Atex model	18000 hours or 3 years

NOTICE Replace the bearings of the unit only if you have all the instructions, the parts list and the section/explosion of the unit

7.5 DISMANTLING AND DEMOLITION



Danger of crushing and / or impacting various parts of the body

During the dismantling and demolition phases due to the sudden drop or displacement of the packaging, there may be a risk of crushing and / or impacting various parts of the body. During work around the unit, the operator may fall due to stumbling or slipping.

8 RESIDUAL RISKS

During the design of the machines or system on which the blower will be installed, the following residual risks should be considered.



Danger during the transport phase

Danger of crushing or slipping during the unit transport steps. The *operating instructions* (attached to the unit) and this manual describe how to carry out safe transport operations according to tested procedures.



Danger during the installation phase

Danger of crushing or slipping during the installation phases of the unit. The *operating instructions* (attached to the unit) and this manual describes how to carry out safe installation operations and according to tested procedures.



Danger during the start-up and operating phase

Danger of electrocution, burns, noise, unauthorized start-up of the unit, and ejection of objects or fluids during the start-up and operation phases of the unit. The *operating instructions* (attached to the unit) and this manual describe how to perform the operations mentioned safely and according to tested procedures.



Danger during maintenance and dismantling phases

Danger of electrocution, burns, noise, unauthorized start-up of the unit, and ejection of objects or fluids during the maintenance and dismantling phases of the unit. The *operating instructions* (attached to the unit) and this manual describe how to perform the operations mentioned safely and according to tested procedures.

9 TROUBLESHOOTING

Problem	Serious code	Cause	Solution	Precaution
The unit does not start	F	Electrical wiring incorrect	The electrical connection has to be checked by a technician referring to the wiring diagram contained in the terminal board box	Turn off the power to the electrical system or set up a system that avoids reinsertion
	F	Power supply voltage unsuitable	Check that the power supply voltage, measured at the motor terminals, is within +/- 10% of the rated voltage	Use PPE against the electrical hazards
	G	The impeller is stuck	Call FPZ assistance to repair the unit	
No or insufficient air flow	G	The suction filter is clogged	A specialized operator (see MAN_PIC) has to clean or replace the cartridge	Avoid entering foreign bodies into the unit
	G	Wrong frequency (for units powered through an inverter)	Correct the frequency	Check the rating plate
	G	Profile of the impeller blades modified (due to deposits on the profile)	Call FPZ assistance personnel to check the impeller	
No or insufficient pressure differential	F	Incorrect direction of rotation	The direction of rotation has to be inverted by a specialized operator (see MAN_PIC) switching two of the electrical power supply wires.	Turn off the power to the electrical system or set up a system that avoids reinsertion
	G	Leaks in the plant	Locate the leak and seal	Use proper sealants
Current absorption exceeding the admissible level	F	Electrical wiring incorrect	The electrical connection has to be checked by a technician referring to the wiring diagram contained in the terminal board box	Take off the power to the electrical system or set up a system that avoids reinsertion
	F	Drop in mains supply voltage	The power supply voltage has to be restored by a specialized operator (see MAN_PIC) at the terminals and at the established values.	
	G	The suction filter is clogged	The cartridge has to be cleaned or replaced by a specialized operator (see MAN_PIC)	Avoid entering foreign bodies into the unit.
	G	The unit has accumulated deposits inside	Call FPZ assistance personnel to clean the inside of the unit	Avoid entering foreign bodies into the unit.
	G	The unit is operating at a pressure and/or vacuum that exceeds the admissible level	Adjust the system and/or the regulating valve to lower pressure differentials.	Use appropriate PPE to operate near the unit
High delivery air temperature	G	The suction filter is clogged	Adjust the system and/or the regulating valve to lower pressure differentials.	Use appropriate PPE (surge protectors, gloves) to operate near the unit
	G	The suction filter is clogged	The cartridge has to be cleaned or replaced by a specialized operator (see MAN_PIC)	Avoid entering foreign bodies into the unit.
	G	The unit has accumulated deposits inside	The unit has to be cleaned inside by a specialized operator (see MAN_PIC).	Avoid entering foreign bodies into the unit.
	G	Suction and/or delivery piping obstructed.	Obstructions have to be removed by a specialized operator (see MAN_PIC).	Avoid entering foreign bodies into the unit.
	G	Suction air temperature exceeds 40°C (+104°F)	Use heat exchangers to reduce the suction air temperature	
Abnormal noise	F	The soundproofing material is damaged	Soundproofing cloth has to be replaced by a technician.	Avoid entering foreign bodies into the unit.
	G	The impeller scrapes against the casing. - The unit is operating at a pressure and/or vacuum that exceeds the admissible level	Reduce the pressure differentials in the plant	Use appropriate PPE (surge protectors, gloves) to operate near the unit
	G	- Reduction of assembly tolerances due to internal deposits (dust, impurities in the pipes, process residues, etc.)	The unit has to be cleaned inside by a specialized operator (see MAN_PIC).	Avoid entering foreign bodies into the unit.
	G	Worn bearing	Bearings have to be replaced by a specialized operator (see MAN_PIC).	
	F	Unit's installation position unsuitable	The unit has to be installed by a technician on structures that cannot transmit or amplify noise (tanks, steel plating, etc.)	Use proper anti-vibration and move the units according to local regulations

Abnormal vibrations	G	The impeller is damaged	The impeller has to be replaced by a specialized operator (see MAN_PIC).	
	G	The impeller has accumulated deposits	The unit has to be cleaned inside by a specialized operator (see MAN_PIC).	Avoid entering foreign bodies into the unit
	G	Unit anchored without anti-vibration insulators	The unit has to be anchored with anti-vibration insulators by specialized operator (see MAN_PIC).	Use proper anti-vibration and move the units according to local regulations
	F	Rigid connection to the plant	Flexible hoses between the unit and the piping have to be fitted by a specialized operator (see MAN_PIC).	Carry out the activity only if the unit is disconnected to the power supply.
	G	Bearing on the blower or motor side defective	Bearings have to be replaced by a specialized operator (see MAN_PIC).	

Leaks	G	Defective silencer gaskets	Gaskets have to be checked by a specialized operator (see MAN_PIC), and if necessary have to be replaced.	Avoid entering foreign bodies into the unit.
	G	Defective casing gaskets	Gaskets have to be cleaned by a specialized operator (see MAN_PIC), and if necessary have to be replaced.	Avoid entering foreign bodies into the unit.

Seriousness: F for functional fault and G for serious fault.

10 REFERENCES

Documents quoted:

- Operating Instruction: supplied with the blower
- MAN_PIC: document with pictogram definitions
- Instruction manual of elastic joint
- Instruction manual of electric motor

Norme e direttive:

- Machinery directive 2006/42/EC
- Atex directive 2014/34/EU (Applies to Atex blowers only)
- EN ISO 12100: 2010
- EN 349:1993+A1: 2008
- EN 614-1: 2006+A1: 2009
- EN ISO 3746: 2010
- EN ISO 13857: 2008
- EN 60204-1: 2006
- EN 1127-1: 2011 (Applies to Atex blowers only)
- EN ISO 80079-36: 2016 (Applies to Atex blowers only)
- EN ISO 80079-37: 2016 (Applies to Atex blowers only)
- EN 14986: 2017 (Applies to Atex blowers only)

11 INSTALLATION DIAGRAMS

SCHEMI DI INSALLAZIONE I
INSTALLATION DIAGRAM GB

COMPRESSORE PRESSURE SERVICE	ASPIRATORE VACUUM SERVICE
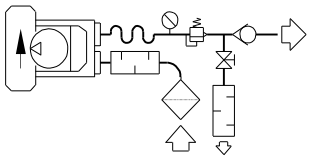	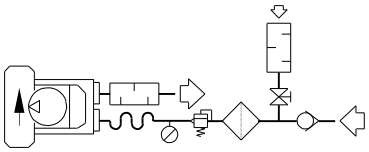
COMPRESSORE IN SERIE SERIAL PRESSURE SERVICE	ASPIRATORE IN PARALLELO PARALLEL VACUUM SERVICE
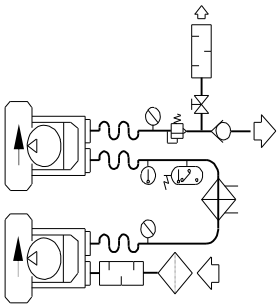	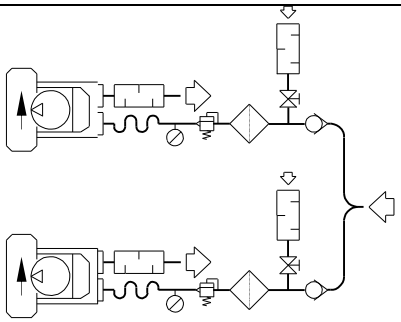
COMPRESSORE IN PARALLELO PARALLEL PRESSURE SERVICE	ATEX BLOWERS SCHEMA D'INSTALLAZIONE INSTALLATION DIAGRAM
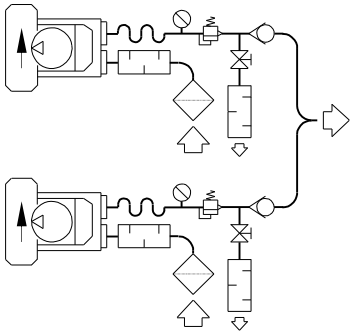	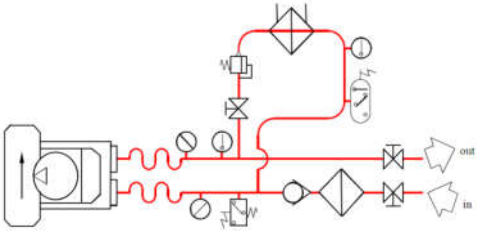

LEGENDA, KEY – ACCESSORIES

Item Item		Denominazione Name	Item Item		Denominazione Name
1		Filtro - Filtro in linea Filter - Inline filter	7		Valvola di ritegno Check valve
(2)		Silenziatore Silencer	8		Valvola Valve
3		Manicotto flessibile Flexible sleeve	(9)		Scambiatore Cooler
4		Manometro – Vuotometro Pressure gauge - Vacuum gauge	(10)		Termometro Thermometer
5		Pressostato – Vuotostato Pressure switch – Vacuum switch	(11)		Termostato Thermostat
6		Valvola limitatrice Pressure relief valve	(x) (x)		SE NECESSARIO IF NECESSARY

SN 1701-9

SAFETY VALVE VRL USE INSTRUCTIONS

CAUTION! THE VALVE IS SUPPLIED NOT CALIBRATED



PLEASE READ CAREFULLY ALL INSTRUCTIONS AND KEEP THEM FOR FUTURE REFERENCE

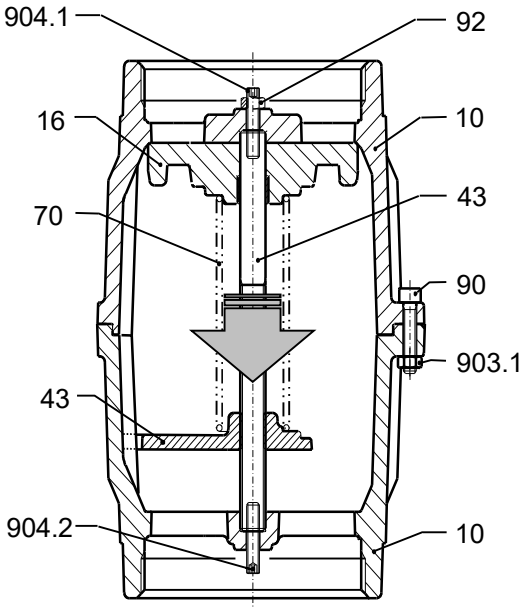

VRL6
Fig. 1a

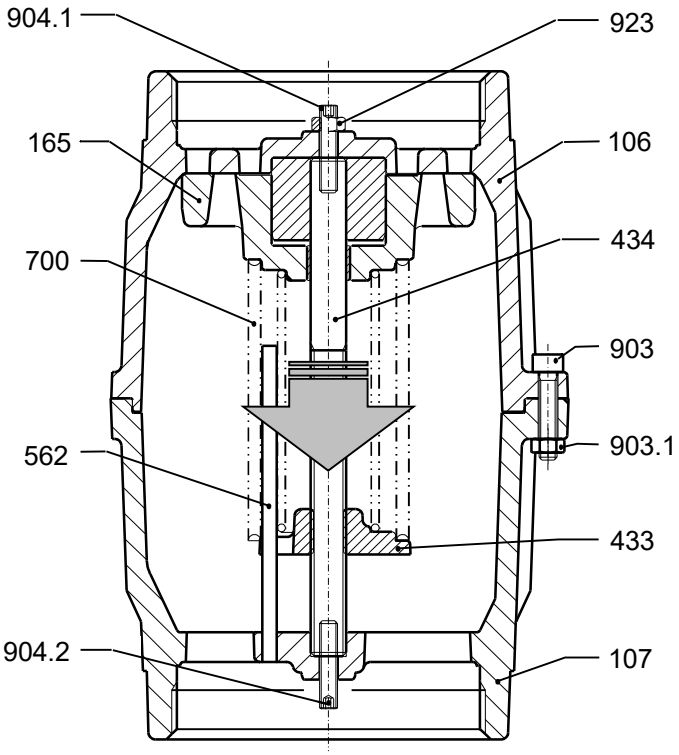

VRL8 - VRL9
Fig. 1b

Description

106	*Housing*	700	*Spring*
107	*Cover*	903	*Screw*
165	*Shutter*	903.1	*Nut*
433	*Spring guide disc*	904.1	*Upper grub screw*
434	*Shutter guide*	904.2	*Lower grub screw*
562	Dowel pin	923	*Nut*

GB CONDITIONS OF USE

- ***THE VRL VALVES ARE DESIGNED FOR THE HANDLING OF AIR OR NON-EXPLOSIVE, NON-HAZARDOUS AND NON-FLAMMABLE GASES IN NON-EXPLOSIVE ENVIRONMENTS. THE GAS INLET TEMPERATURE MUST BE IN THE RANGE OF -15 TO +160 °C.***
- ***RELIEF VALVES ARE DESIGNED AND MANUFACTURED TO LIMIT THE OPERATING PRESSURE IN LOW PRESSURE/VACUUM APPLICATIONS. THEY ARE FOR USE SPECIFICALLY ON LOW PRESSURE BLOWERS AND VACUUM PUMPS ONLY;***
- ***THE VALVE CANNOT WITHSTAND HIGH INTERNAL PRESSURE, DESIGN MAXIMUM OF 2.8 bar A;***
- ***THERE IS SMALL LOSS OF THE AIR/GAS BEING HA***
- ***SOLID PARTICULES, HOWEVER SMALL, INCLUDING DIRT CAN CAUSE SERIOUS DAMAGE; THEREFORE IT IS ESSENTIAL THAT SUCH SUBSTANCES SHOULD BE REMOVED FROM THE GAS BY SUITABLE FILTERS UPSTREAM OF THE INLET.***

SELECTION DIAGRAM

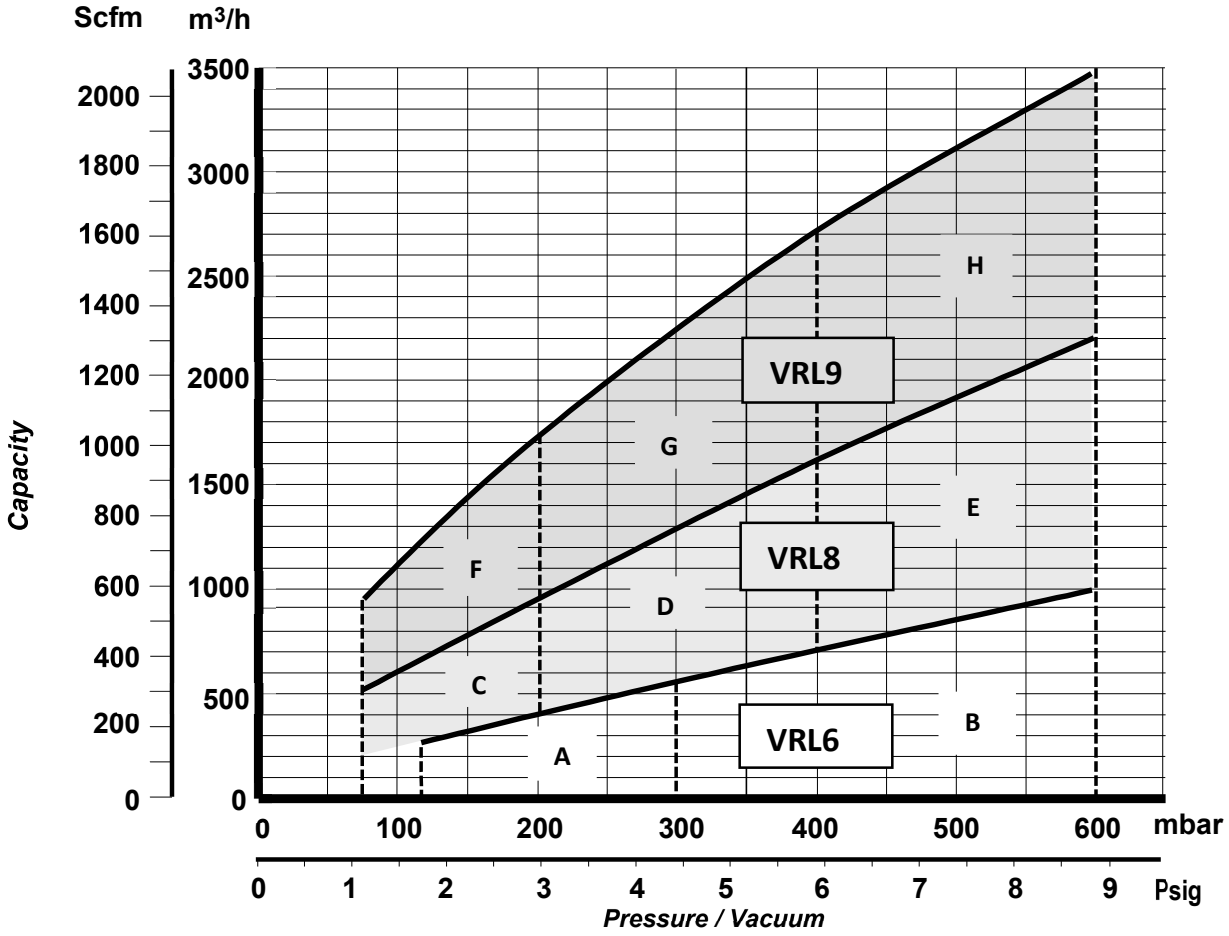

SPRING SELECTION CHART

RANGE	*SPRING* N	*Pressure / Vacuum* MIN [mbar]	[psig]	*Pressure / Vacuum* MAX [mbar]	[psig]	*Colour of identification*
VRL6						
A	I	**120**	**1.763**	**300**	**4.408**	***SILVER***
B	II	**300**	**4.408**	**600**	**8,820**	***GREEN***
VRL8						
C	I	**75**	**1.102**	**200**	**2.940**	***SILVER***
D	II	**200**	**2.940**	**400**	**5.880**	**GREEN**
E	I + II	**400**	**5.880**	**600**	**8,820**	***SILVER & GREEN***
VRL9						
F	I	**75**	**1.102**	**200**	**2.940**	**VERDE - GREEN - VERT - GRÜN - VERDE**
G	II	**200**	**2.940**	**400**	**5.880**	***SILVER***
H	I + II	**400**	**5.880**	**600**	**8,820**	***SILVER & GREEN***

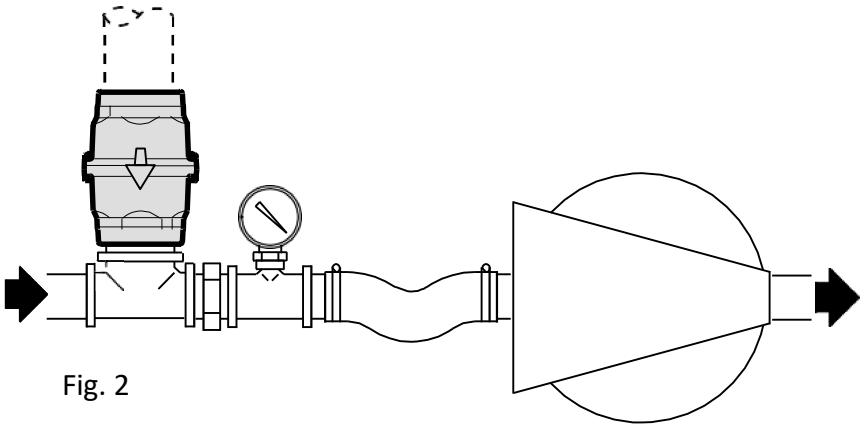

Fig. 2

INSTALLATION SKETCH – VACUUM RELIEF VALVE

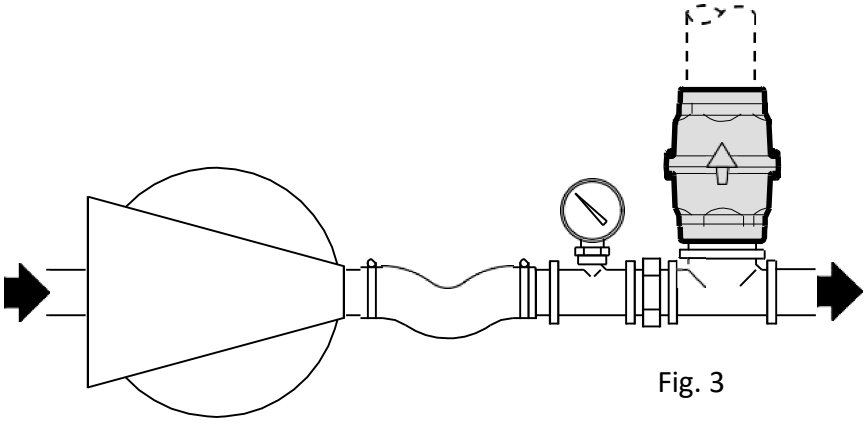

Fig. 3

INSTALLATION SKETCH – PRESSURE RELIEF VALVE

1. CHOICE OF SPRING

The valve is supplied with 2 different springs; each spring is to be used within a specific pressure-vacuum operating range. For the VRL8 and VRL9 there is the possibility to use both springs working in parallel.
Referring to the SELECTION DIAGRAM, check that the valve is correctly sized and depending where the operating point (area A, B,…H) is located, choose one or two springs according to SPRING SELECTION CHART.
The valve is supplied with spring # I installed. If spring needs to be replaced or a supplementary spring is needed to be added (for VRL8 / VRL9), proceed to point # 2 otherwise, adjust valve as per point #3.

2. INSTRUCTIONS FOR SPRING REPLACEMENT (OR MOUNTING ADITIONAL SPRING FOR VRL8 / VRL9)

- Remove the two plastic caps on valve.
- **Ensure stop-nut 923 is locked on the upper housing 106.**
- Unscrew screw 903 from nut 903.1.
- Remove cover 107 from housing 106.
- Unscrew spring guide disc 433 taking it out from shutter guide 434.
- Remove spring 700 (only in case of replacement).
- Install the appropriate spring into shutter 165.
- Compress spring and screw spring guide disc 433 on shutter guide 434 for at least 20 full thread terms
- Check that both ends of the spring are properly positioned within their seats.
- Install the cover 107 on the housing 106 inserting:
  - for VRL6: the sliding guide on the slot in spring guide disc 433
  - for VRL8 and VRL9: dowel pin 562 on the slot in spring guide disc 433.
- Tighten screw 903 on nut 903.1

3. VALVE SETTING

A) Setting-up at allowed vacuum level

- Remove the two plastic caps on valve, if any.
- Position valve on the suction by-pass and connect a vacuum gage as close as possible to the exhauster inlet (Fig. 2).
- Unscrew nut 923.
- Relieve spring tension by backing off upper grub screw 904.1 with the fit key.
- Turn on exhauster. Induce highest attainable vacuum by throttling air intake upstream relief valve (normally reducing throttle to fully-closed).
- Adjust upper grub screw 904.1 until maximum allowable vacuum level is reached.
- Tighten nut 923 keeping blocked upper grub screw 904.1.
- Open suction line.

Double-check vacuum gauge to ensure no additional losses are induced by pipes or filters installed upstream relief valve

B) Setting-up at allowed pressure level

- Remove the two plastic caps on valve, if any.
- Remove nut 923 from upper grub screw 904.1 and place it on to the lower grub screw 904.2. Do not tighten.
- Position valve on the discharge by-pass and connect a pressure gage as close as possible to the blower outlet (Fig. 3).
- Relieve spring tension by backing on lower grub screw 904.2 with the fit key.
- Turn on blower. Induce highest attainable pressure by throttling air discharge downstream of the valve (normally reducing throttle to fully-closed).
- Unscrew lower grub screw 904.2 until maximum allowable pressure level is reached.
- Tighten nut 923 keeping blocked lower grub screw 904.2.
- Open discharge line.

Double-check pressure gauge to ensure no additional losses are induced by pipes or filters installed downstream the valve

Section 3.3

MBBR and Clarifier Package

Section 3.3.1

MBBR and Clarifier Tank

REV	DESCRIPTION	DATE	BY	APP'D
0	FOR REFERENCE ONLY	03/24/22	JG	JC
1	REVISED AS PER COMMENTS	04/01/22	JG	JC
2	REVISED HATCH - HINGE REMOVED	04/27/22	JG	JC
3	FOR REFERENCE ONLY	05/19/22	JG	JC

MANUFACTURING NOTES:

1. QTY: 1 UNIT
2. MATERIAL: SS 316, 11 GAUGE FOR TANK WALL, 2" X 2" X 1/4" STRUCTURAL ANGLE
3. ALL DIMENSIONS ARE EDGE TO EDGE UNLESS OTHERWISE NOTED.
4. TOLERANCES: ANGULAR MACH. ±1°, BEND ± 1°, DECIMAL ±1.5mm OR ±1/16"
5. ALL WELDS MUST BE MIN.3/16" CONTINUOUS MIG/TIG WELDS (FLARE BEVEL WELD WHERE NECESSARY)
6. ALL WELDS MUST BE UNIFORM AND AESTHETICALLY PLEASING, CONFORM TO CWB/ASME
7. REMOVE ALL SHARP EDGES, CLEAN AND GRINDING FLAT ALL WELDINGS WHEN APPLICABLE

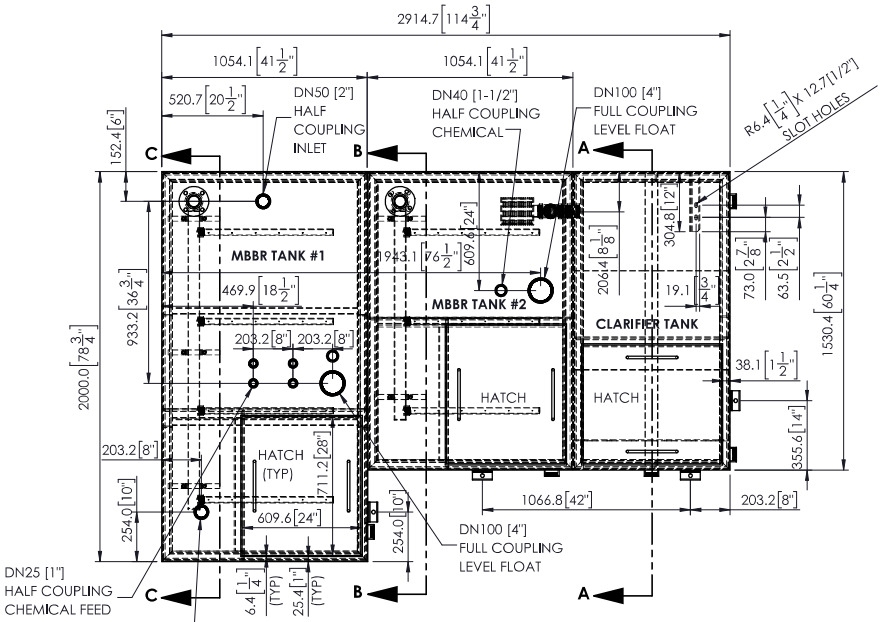

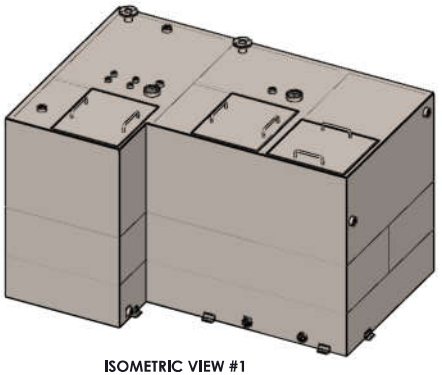

ISOMETRIC VIEW #1

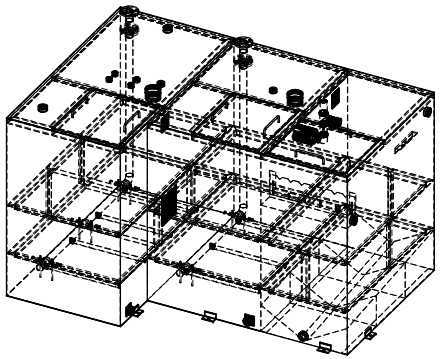

ISOMETRIC VIEW #2
(WITH HIDE LINE)

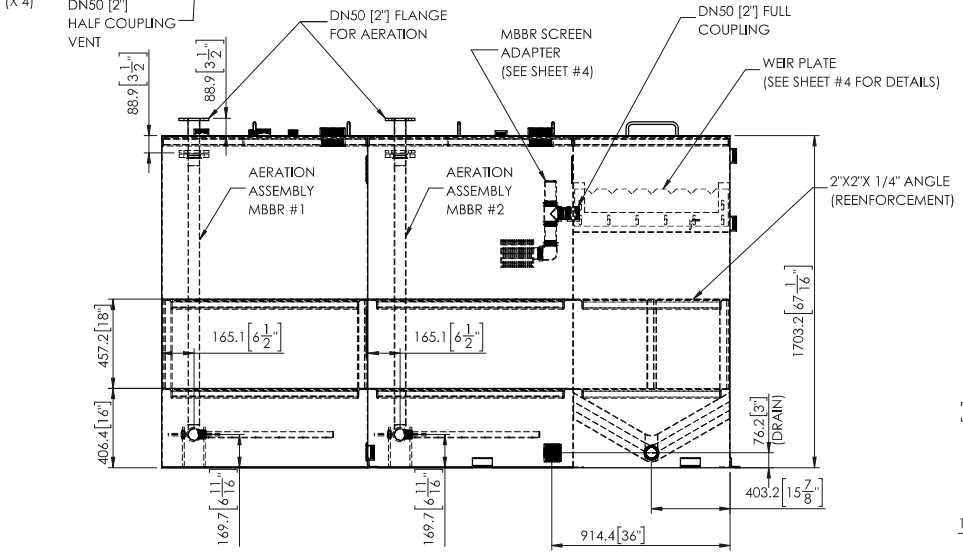

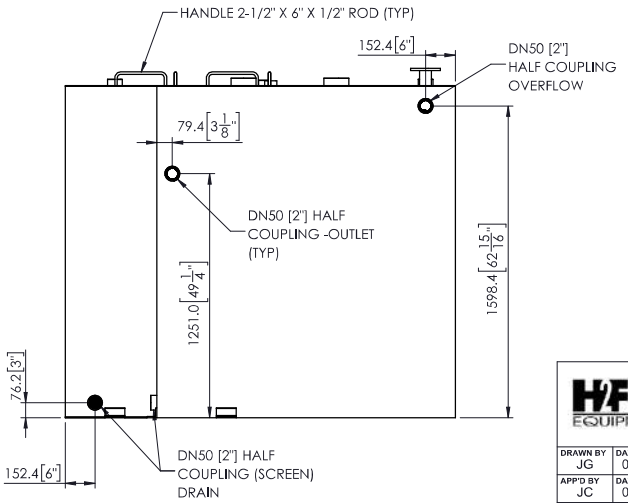

H2FLOW EQUIPMENT INC.

WATER AND WASTEWATER TREATMENT EQUIPMENT
560 OSTER LANE, CONCORD, ON L4K 2C1 CANADA
TEL: (905) 660-9775 FAX: (905) 660-9744
www.h2flow.com

THIS DRAWING IS THE PROPERTY OF H2FLOW EQUIPMENT INC. AND SHALL NOT BE COPIED OR TRANSFERRED WITHOUT THE WRITTEN CONSENT OF H2FLOW EQUIPMENT INC.

DRAWN BY: JG	DATE: 03/24/22	PROJECT NAME: EUREKA CONTAINERIZED MBBR NUNAVUT	TITLE: GENERAL ARRANGEMENT - MBBR/CLARIFIER TANK
APP'D BY: JC	DATE: 03/24/22		DRAWING No.: Q-28520-31-03
SCALE: NTS		ALL DIMENSION ARE IN "mm" UNLESS OTHERWISE SPECIFIED	REV: 3
R10	VERSION 1	APRIL 07, 2021	SHEET 1 OF 4

REV	DESCRIPTION	DATE	BY	APP'D
0	FOR REFERENCE ONLY	03/24/22	JG	JC
1	REVISED AS PER COMMENTS	04/01/22	JG	JC
2	REVISED HATCH - HINGE REMOVED	04/27/22	JG	JC
3	FOR REFERENCE ONLY	05/19/22	JG	JC

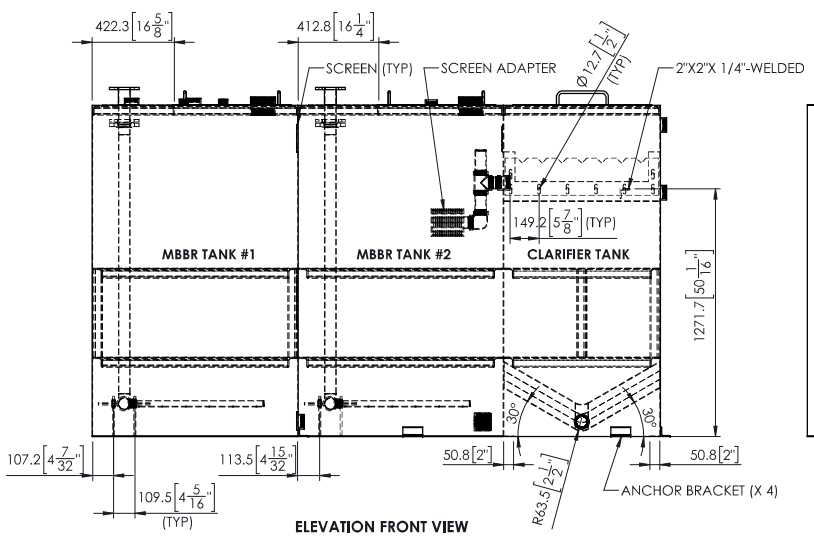

ELEVATION FRONT VIEW

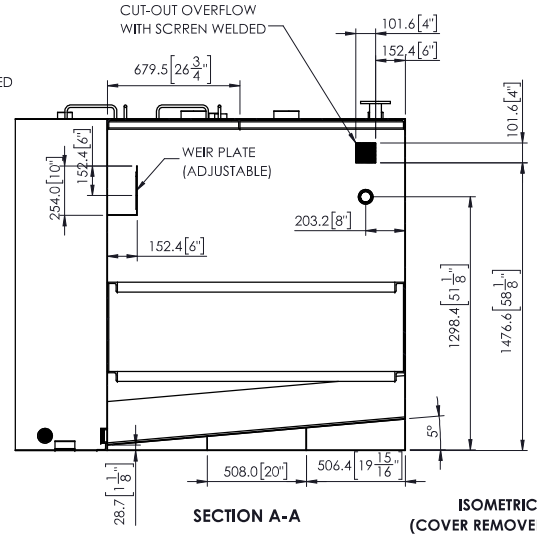

SECTION A-A

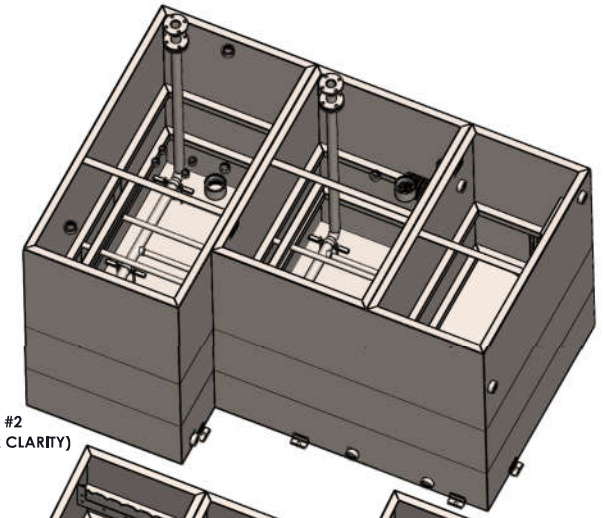

ISOMETRIC VIEW #2
(COVER REMOVED FOR CLARITY)

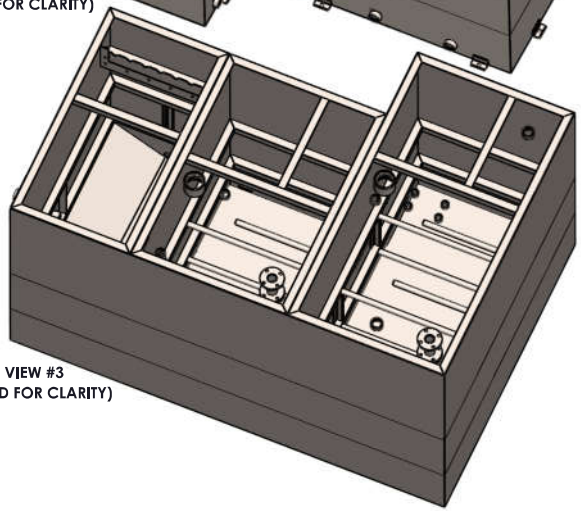

ISOMETRIC VIEW #3
(COVER REMOVED FOR CLARITY)

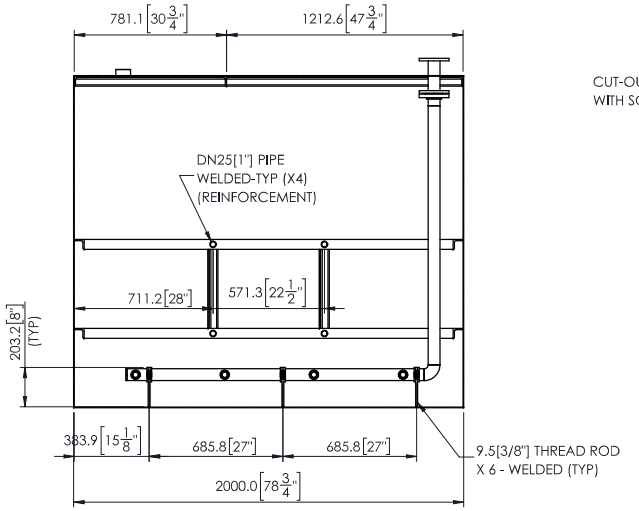

SECTION C-C

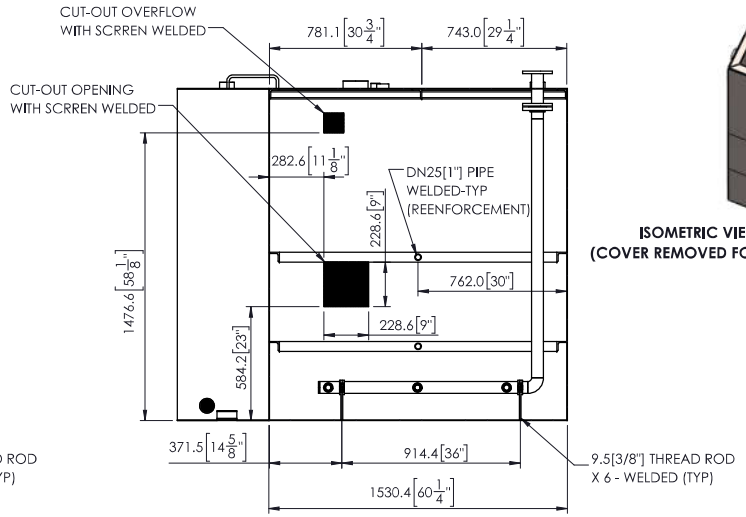

SECTION B-B

H2FLOW EQUIPMENT INC.

WATER AND WASTEWATER TREATMENT EQUIPMENT
580 OSTER LANE, CONCORD, ON L4K 2C1 CANADA
TEL: (905) 660-9775 FAX: (905) 660-9744
www.h2flow.com

THIS DRAWING IS THE PROPERTY OF H2FLOW EQUIPMENT INC. AND SHALL NOT BE COPIED OR TRANSFERRED WITHOUT THE WRITTEN CONSENT OF H2FLOW EQUIPMENT INC.

DRAWN BY: JG	DATE: 03/24/22	PROJECT NAME: EUREKA CONTAINERIZED MBBR NUNAVUT	TITLE: GENERAL ARRANGEMENT - MBBR/CLARIFIER TANK
APP'D BY: JC	DATE: 03/24/22		DRAWING No.: Q-28520-31-03
SCALE: NTS		ALL DIMENSION ARE IN "mm" UNLESS OTHERWISE SPECIFIED	REV: 3
R10	VERSION 1	APRIL 07, 2021	SHEET 2 OF 4

REV	DESCRIPTION	DATE	BY	APP'D
0	FOR REFERENCE ONLY	03/24/22	JG	JC
1	REVISED AS PER COMMENTS	04/01/22	JG	JC
2	REVISED HATCH - HINGE REMOVED	04/27/22	JG	JC

LATERAL DETAILS - QTY: 7 PCS (TOTAL, FOR MBBR TANK #1 & #2) [SCALE 1:10]
MATERIAL: SS 316, DN25 [1"] SCH.40 PIPE

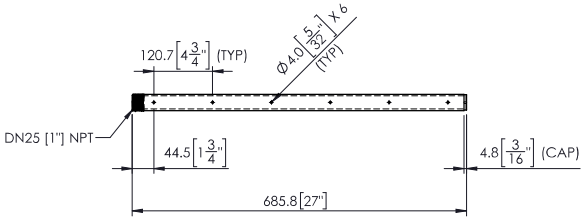

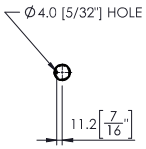



LATERAL ISOMETRIC VIEW



ISOMETRIC MBBR #1 AERATION PIPING

MBBR TANK #1 AERATION PIPING ASSEMBLY- QTY: 1 PC [SCALE 1:20]
MATERIAL: SS 316

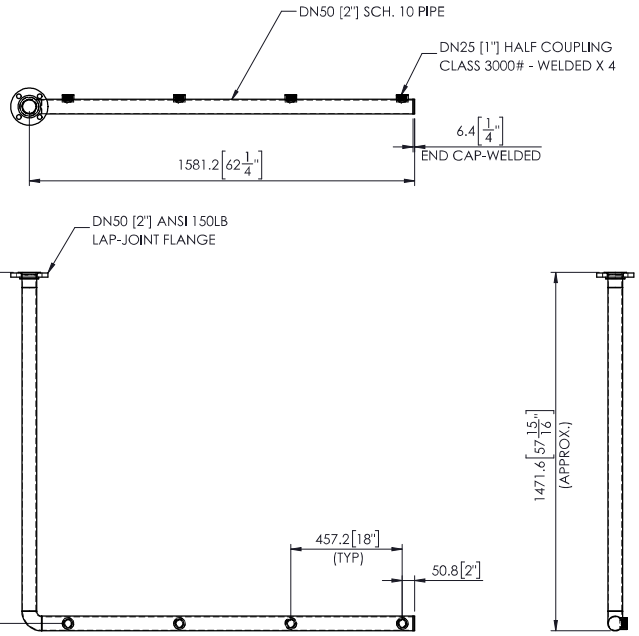

MBBR TANK #2 AERATION PIPING ASSEMBLY- QTY: 1 PC [SCALE 1:20]
MATERIAL: SS 316

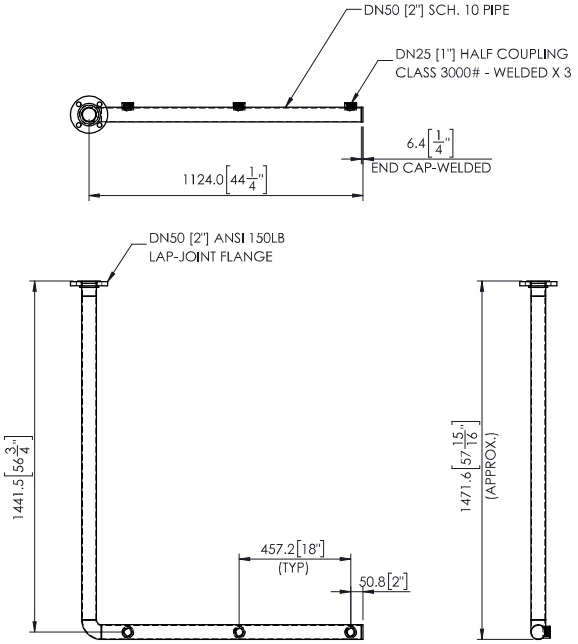

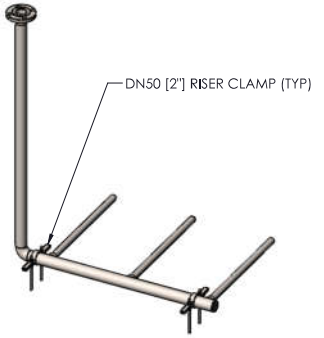

ISOMETRIC MBBR #2 AERATION PIPING

H2FLOW EQUIPMENT INC.

WATER AND WASTEWATER TREATMENT EQUIPMENT
560 OSTER LANE, CONCORD, ON L4K 2C1 CANADA
TEL: (905) 660-9775 FAX: (905) 660-9744
www.h2flow.com

THIS DRAWING IS THE PROPERTY OF H2FLOW EQUIPMENT INC. AND SHALL NOT BE COPIED OR TRANSFERRED WITHOUT THE WRITTEN CONSENT OF H2FLOW EQUIPMENT INC.

DRAWN BY: JG	DATE: 03/24/22	PROJECT NAME: EUREKA CONTAINERIZED MBBR NUNAVUT	TITLE: GENERAL ARRANGEMENT - MBBR/CLARIFIER TANK
APP'D BY: JC	DATE: 03/24/22		DRAWING No.: Q-28520-31-03
SCALE: NTS		ALL DIMENSION ARE IN "mm" UNLESS OTHERWISE SPECIFIED	REV: 2
R10	VERSION 1	APRIL 07, 2021	SHEET 3 OF 4

REV	DESCRIPTION	DATE	BY	APP'D
0	FOR REFERENCE ONLY	03/24/22	JG	JC
1	REVISED AS PER COMMENTS	04/01/22	JG	JC
2	REVISED HATCH - HINGE REMOVED	04/27/22	JG	JC
3	FOR REFERENCE ONLY	05/19/22	JG	JC

WEIR PLATE (BOLTED INSIDE THE TANK)

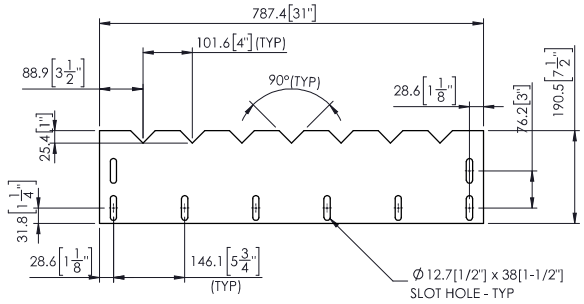

WEIR PLATE DETAIL
THICKNESS: 11 GAUGE
SCALE 1:10

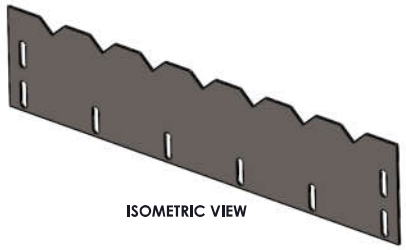

ISOMETRIC VIEW

PART LIST		
PARAMETER	DESCRIPTION	NOTE
SCREEN DIAMETER	DN 125 [5"]	
SLOT SIZE	5 mm (+/-0.002)	
WRAP WIRE	No. 90	
SUPPORT WIRE	No. 177	
END CONNECTION	DN 50 [2"] PIPE NPT	
END PLATE	4.8 [3/16"] THICKNESS	WELDED

MBBR SCREEN ADAPTER (INSTALLED INSIDE THE TANK)

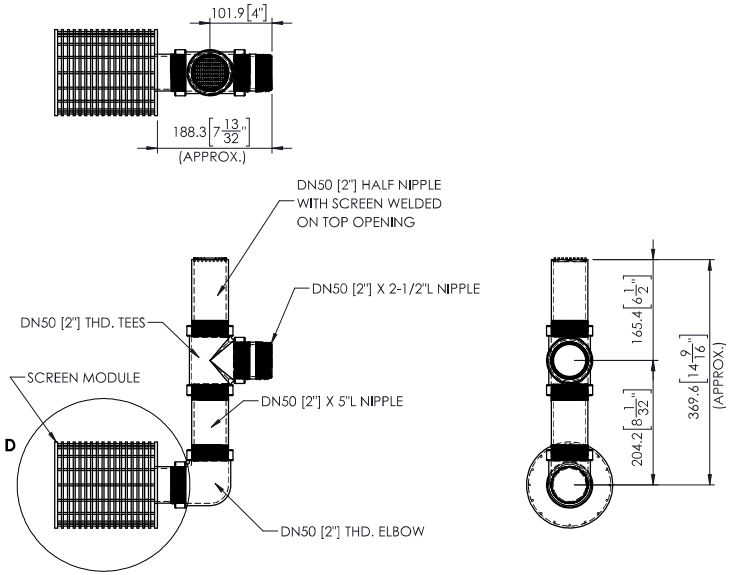

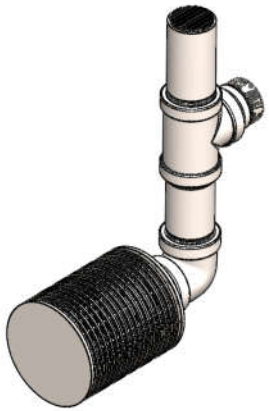

ISOMETRIC VIEW

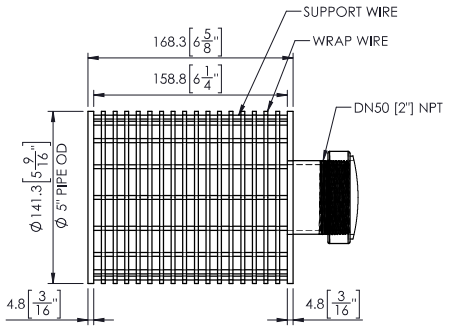

SCREEN MODULE DETAIL D
SCALE 1 : 4

H2FLOW EQUIPMENT INC.
WATER AND WASTEWATER TREATMENT EQUIPMENT
580 OSTER LANE, CONCORD, ON L4K 2C1 CANADA
TEL: (905) 660-9775 FAX: (905) 660-9744
www.h2flow.com

THIS DRAWING IS THE PROPERTY OF H2FLOW EQUIPMENT INC. AND SHALL NOT BE COPIED OR TRANSFERRED WITHOUT THE WRITTEN CONSENT OF H2FLOW EQUIPMENT INC.

DRAWN BY: JG	DATE: 03/24/22	PROJECT NAME: EUREKA CONTAINERIZED MBBR NUNAVUT	TITLE: GENERAL ARRANGEMENT - MBBR/CLARIFIER TANK
APP'D BY: JC	DATE: 03/24/22		DRAWING No.: Q-28520-31-03
SCALE: NTS		ALL DIMENSION ARE IN "mm" UNLESS OTHERWISE SPECIFIED	REV: 3
R10	VERSION 1	APRIL 07, 2021	SHEET 4 OF 4

Section 3.3.2

Transfer and Treated Effluent Tank

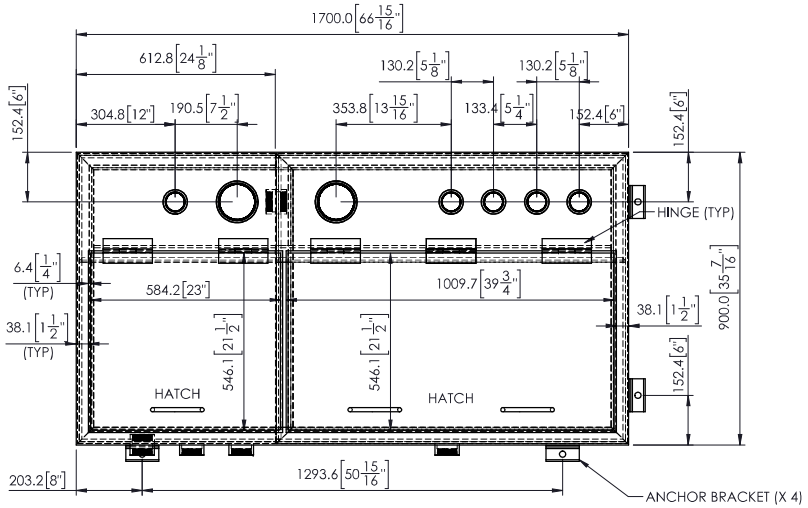

MANUFACTURING NOTES:

1. QTY: 1 UNIT
2. MATERIAL: SS 316, 11 GAUGE FOR TANK WALL, 2" X 2" X 1/4" STRUCTURAL ANGLE
3. ALL DIMENSIONS ARE EDGE TO EDGE UNLESS OTHERWISE NOTED.
4. TOLERANCES: ANGULAR MACH. ±1°, BEND ± 1°, DECIMAL ±1.5mm OR ±1/16"
5. ALL WELDS MUST BE MIN.3/16" CONTINUOUS MIG/TIG WELDS (FLARE BEVEL WELD WHERE NECESSARY)
6. ALL WELDS MUST BE UNIFORM AND AESTHETICALLY PLEASING, CONFORM TO CWB/ASME
7. REMOVE ALL SHARP EDGES, CLEAN AND GRINDING FLAT ALL WELDINGS WHEN APPLICABLE

REV	DESCRIPTION	DATE	BY	APP'D
0	FOR REFERENCE ONLY	03/25/22	JG	JC
1	REVISED AS PER COMMENTS	03/31/22	JG	JC

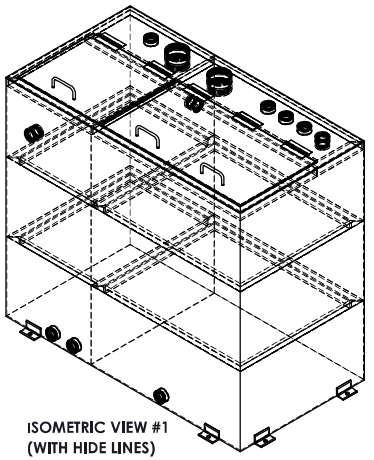

ISOMETRIC VIEW #1
(WITH HIDE LINES)

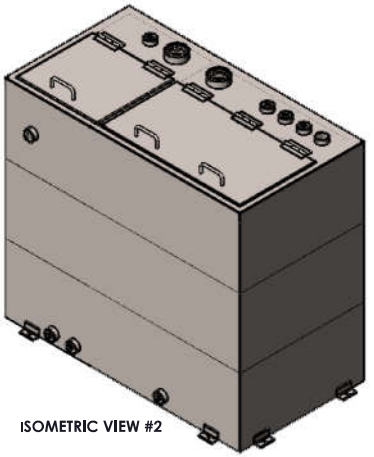

ISOMETRIC VIEW #2

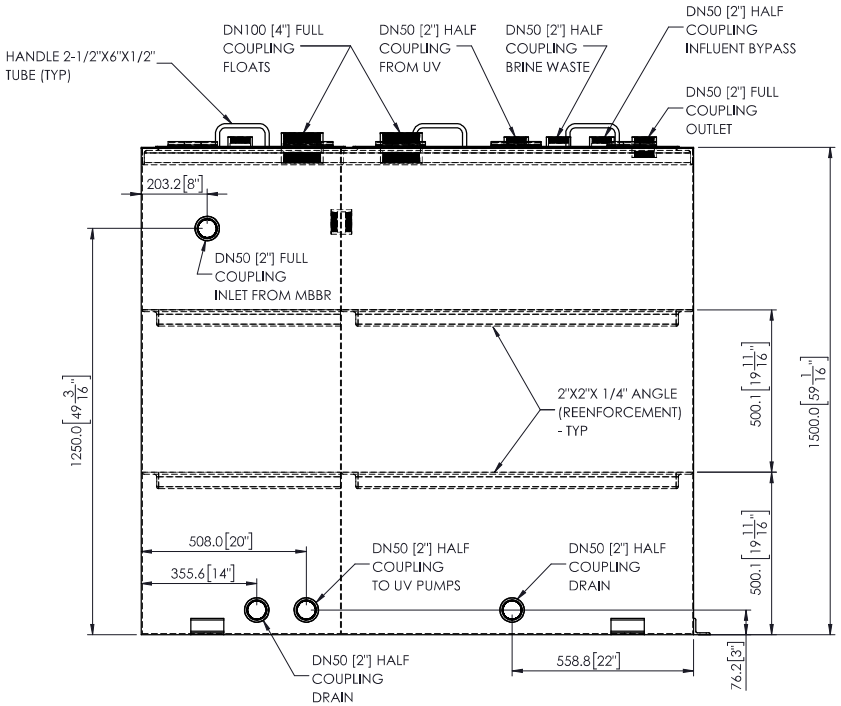

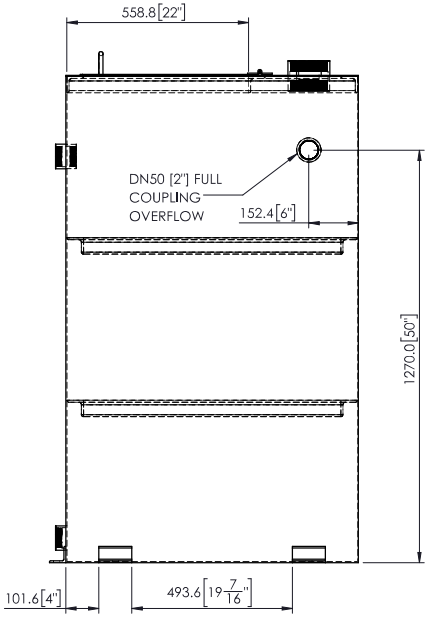

H2FLOW EQUIPMENT INC.
WATER AND WASTEWATER TREATMENT EQUIPMENT
560 OSTER LANE, CONCORD, ON L4K 2C1 CANADA
TEL: (905) 660-9775 FAX: (905) 660-9744
www.h2flow.com

THIS DRAWING IS THE PROPERTY OF H2FLOW EQUIPMENT INC. AND SHALL NOT BE COPIED OR TRANSFERRED WITHOUT THE WRITTEN CONSENT OF H2FLOW EQUIPMENT INC.

DRAWN BY: JG	DATE: 03/25/22	PROJECT NAME: EUREKA CONTAINERIZED MBBR NUNAVUT	TITLE: GENERAL ARRANGEMENT - TRANSFER TANK
APP'D BY: JC	DATE: 03/25/22		DRAWING No.: Q-28520-31-04
SCALE: NTS		ALL DIMENSION ARE IN "mm" UNLESS OTHERWISE SPECIFIED	REV: 1
R10	VERSION 1	APRIL 07, 2021	SHEET 1 OF 1

Section 3.3.3

Treated Effluent Tank's Sump Pumps

Installation Manual

6850000A

XLSG200 & XLSGX200 Series
2 HP Grinder Pumps for Hazardous Locations

Models:

- XLSG200 Series 2 HP, Single Stage
- XLSGX200 Series 2 HP, Dual Stage

Approved Hazardous Locations:

- Class 1, Div. 1, Groups C & D
- Class 1, Zone 1, Groups IIA & IIB



TABLE OF CONTENTS

1. Safety Information
2. General Information
3. Installation Instructions
4. Maintenance and Troubleshooting
5. 3-Year Limited Warranty

SSPMA CERTIFIED

C SA US

Liberty Pumps

7000 Apple Tree Avenue
Bergen, NY, USA 14416
Phone: +1 (800) 543-2550
Fax: +1 (585) 494-1839
www.libertypumps.com

NOTICE

Installer: Please leave this manual with the owner/operator for future reference.

Prior to installation, duplicate the information from pump nameplate below and keep nearby for future reference.

Model #: _____ Serial #: _____

Manufacture (MFG) Date: _____ Installation Date: _____

⚠ WARNING **Read every supplied manual before using pump system. Follow all the safety instructions in manual(s) and on the pump. Failure to do so could result in serious injury or death.**

Keep manual nearby for future reference. If manual becomes lost or damaged, get a replacement at http://www.libertypumps.com/ under installation manuals, or contact Liberty Pumps.

©Copyright 2017 Liberty Pumps Inc. All rights reserved.

1. Safety Information

	This safety alert symbol in your manual and on the pump is intended to alert you to a potential risk for injury or death.
	This is a safety alert symbol identifying **risk of electric shock**. It will be accompanied with an instruction intended to minimize your potential risk of electric shock.
	This is a safety alert symbol identifying **risk of fire**. It will be accompanied with an instruction intended to minimize your potential risk of fire.
	This is a safety alert symbol identifying **risk of injury or death**. It will be accompanied with an instruction intended to minimize your potential risk of injury or death.
⚠ DANGER	Warns of hazards that **will** cause serious injury or death.
⚠ WARNING	Warns of hazards that **can or will** cause minor or moderate injury.
⚠ CAUTION	Warns of hazards that **can** cause personal injury, death, or property damage.
NOTICE	Signals an important instruction related to the pump. Failure to follow these instructions could result in pump component failure, or improper operation of the unit, possibly resulting in property damage .

⚠ WARNING



RISK OF ELECTRIC SHOCK - Accidental contact with electrically live parts, items, fluid, or water can cause serious injury or death.

- ALWAYS disconnect the supplied pump(s) from their power sources before handling or making any adjustments to either the pump(s), the pump system, or the control panel.
- Only qualified personnel should complete fixed wiring and electrical connections, according to all local and national electrical codes, during a pump system installation.
- After installation, be certain that the pump is properly grounded, using its supplied grounding conductor. Failure to properly ground the pump system can cause all metal portions of the pump and its surroundings to become energized.
- During flood conditions, submerged electrical connections can energize the water. Always wear dielectric rubber boots and other applicable Personal Protective Equipment (PPE) when water is on the floor and you must service an energized pump system. DO NOT ENTER THE WATER if the water level is higher than that of the protection your PPE offers or if your PPE is not watertight.
- NEVER lift or carry a pump or a float assembly by its power cord. This will damage the power cord, and could expose the electrically live wires inside the power cord.
- DO NOT bypass grounding wires.
- The electrical power supply shall be located within the length limitations of the pump power cord, and for below grade installations it shall be at least 1.22 m (4 ft) above the floor level.
- NEVER use this product in applications where human contact with the pumped fluid is common (such as swimming pools, fountains, marine areas, etc.).

©Copyright 2017 Liberty Pumps Inc. All rights reserved.

WARNING

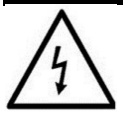

RISK OF ELECTRIC SHOCK - continued

- During construction, if the pump system is installed before its power cord can be plugged in or direct wired, all power cords must be protected from the environment to prevent water from wicking through the cord end into the pump or switch housings. If water enters these housings, an electrical short can occur from the pump or switch to its surroundings, which will energize the surroundings.

WARNING



RISK OF FIRE

- DO NOT use an extension cord to power the product. Extension cords can overload both the product and extension cord supply wires. Overloaded wires will get very hot and can catch on fire.
- This product requires a separate, properly fused and grounded branch circuit, sized for the voltage and amperage requirements of the pump, as noted on the nameplate. Overloaded branch circuit wires will get very hot and can catch on fire.
- NEVER use this product with or near flammable liquids. If the rotating elements inside this pump strike any foreign object, sparks may occur. Sparks could ignite flammable liquids.

WARNING



RISK OF SERIOUS INJURY OR DEATH

- This pump system must be installed in accordance with all applicable codes and ordinances.
- DO NOT allow children to play with the pump system.
- DO NOT allow children, or any person who is unqualified, to use this pump system. Any person who is unaware of the dangers of this pump system, or whom has not read this manual, can easily be injured by the pump system.
- Wear adequate PPE when working on pumps or piping that have been exposed to wastewater. Sump and sewage pumps often handle materials which can transmit illness or disease upon contact with your skin and other tissues.

NOTICE

- NEVER dispose of materials such as paint thinner or other chemicals down drains. Doing so could chemically attack and damage pump system components and cause product malfunction or failure.
- DO NOT use pumps with fluid over 40°C. Operating the pump in fluid above this temperature can overheat the pump, resulting in pump failure.
- DO NOT use pump system with mud, sand, cement, oil or chemicals. Pump and system components can be damaged from these items causing product malfunction or failure. Additionally, flooding can occur if these items jam the impeller or piping.
- DO NOT modify the pump system in any way. Modifications may affect seals, change the electrical loading of the pump, or damage the pump and its components. Modifications can void your warranty on this product.
- DO NOT run this pump system dry.

©Copyright 2017 Liberty Pumps Inc. All rights reserved.

2. General Information

These pumps are to be used for handling septic tank effluent, sewage, and drain (storm) water. X-Series pumps are CSA Certified to UL778 and CSA C22.2 no. 108, and tested to FM standards for Hazardous (Classified) Locations.

Improper installation, use, or operation of products in a Hazardous (classified) Locations can result in explosion and fire. All components must be installed in accordance with best practices to minimize the possibility of ignition. All wiring and electrical installation shall be in accordance with Federal, State, and Local codes by trained professionals.

The pump must be serviced at a qualified hazardous motor enclosure repair facility approved by Liberty Pumps. Any unauthorized field repairs voids warranty and hazardous location ratings. Contact Liberty Pumps at 1-800-543-2550 to locate the closest repair facility.

Model	HP	Voltage	Phase	Full Load Amps	Locked Rotor Amps	Thermal Overload Temp.	Dis-charge
XLSG208M	2	200	1	18.1	66.5	135° C	1-1/4 "
XLSG202M	2	230	1	15	64.3	135° C	1-1/4 "
XLSG203M	2	200/230	3	12	39.2	120° C	1-1/4 "
XLSG204M	2	460	3	6.2	19.6	120° C	1-1/4 "
XLSG205M	2	575	3	5	16.3	120° C	1-1/4 "
XLSGX208M	2	200	1	20	66.5	135° C	1-1/4 "
XLSGX202M	2	230	1	20	64.3	135° C	1-1/4 "
XLSGX203M	2	200/230	3	13.5	39.2	120° C	1-1/4 "
XLSGX204M	2	460	3	6.7	19.6	120° C	1-1/4 "
XLSGX205M	2	575	3	5.3	16.3	120° C	1-1/4 "

Table 1

Notes:

X-Series Grinder pumps require the use of a separate control panel. Panels designed for use with the X-Series pumps are available from Liberty Pumps, and standard models are outlined below.

Single phase pumps require the use of a panel-mounted start circuit consisting of a start and run capacitor and a motor start relay. These components are available as kits from Liberty Pumps. Please see the table below to identify the correct kit for the pump being controlled.

All models have a surface temperature (T) class rating of T4; if thermostat is not connected on three phase units, the temperature rating drops to T3. The float switches must be connected to an intrinsically safe circuit in the control panel. The minimum water depth for proper motor cooling shall be set at 13”.

The use of Non-Liberty panels on 3-phase pumps must have provisions for the thermostat that open the motor contactors in order to maintain the T4 temperature class. Do not exceed voltage / current combinations for the thermostat: 16 VDC / 20 Amps, 115 VAC / 22 Amps, 277 VAC / 8 Amps, and 600 VAC / 4 Amps.

Liberty Pumps Control Information					
Pump Models	**Start Capacitor**	**Run Capacitor**	**Cap Kit**	**Simplex Panel**	**Duplex Panel**
XLSG208M	325 µF	65 µF	K001640	ISS24HS1=3-5	ISD24HS1=3-5
XLSG202M	275 µF	50 µF	K001641	ISS24HS1=3-5	ISD24HS1=3-5
XLSG203M	N/A	N/A	N/A	ISS34=3-511-5	ISD34=3-511-5
XLSG204M	N/A	N/A	N/A	ISS34=3-191-5	ISD34=3-191-5
XLSG205M	N/A	N/A	N/A	ISS54=3-161-5	ISD54=3-161-5
XLSGX208M	325 µF	65 µF	K001640	ISS24HS1=3-5	ISD24HS1=3-5
XLSGX202M	275 µF	50 µF	K001641	ISS24HS1=3-5	ISD24HS1=3-5
XLSGX203M	N/A	N/A	N/A	ISS34=3-511-5	ISD34=3-511-5
XLSGX204M	N/A	N/A	N/A	ISS34=3-191-5	ISD34=3-191-5
XLSGX205M	N/A	N/A	N/A	ISS54=3-161-5	ISD54=3-161-5

Table 2

©Copyright 2017 Liberty Pumps Inc. All rights reserved.

Seal Leak Detection:

All X-Series Grinder pumps are equipped with two mechanical face seals with an intermediate oil chamber between them. This ensures lubrication for the seals, shaft flame path, and as a barrier to the motor chamber in the event the lower seal should become compromised. A seal fail or moisture sensing device is located in the mid oil chamber and continuously monitors for leakage. In the event of a seal failure, moisture mixes with the oil tripping the seal leak circuit. In a failure condition, a fault light will illuminate and the pump will continue to run; service should be scheduled as soon as possible.

The ISS and ISD panels by Liberty Pumps have a seal leak test button that tests the integrity of the seal leak circuit continuity. When pressed, the light should illuminate. If it does not, either the light is burned out or the circuitry is open. The seal leak module is located inside the panel and requires adjustment upon installation. The seal leak relay adjustment dial should be set to 75; for best results turn the dial until the light turns on around 125 then turn it back to 75.

Thermal Protection:

The X-Series Grinder pumps are protected from overheating by means of thermal switches located in the motors. For single phase (1ph) models, a hermetically sealed thermal overload device is mounted on the motor windings and wired directly in series with the motor's winding, interrupting power in a high heat condition. Three phase (3ph) models utilize two thermostats mounted in series directly on the motor windings. The thermostat circuit must be connected to a control panel which will stop power to the pump in a high temperature condition. Both single and three phase (1ph & 3ph) pumps are constructed with class F materials, with a maximum operation temperature of 311°F or 155°C. Failure to use the proper circuitry and connection of the thermostat will drop temperature class from T4 to T3 on three phase units.

Note: when connecting a X-Series Grinder pump to an existing control panel, make certain the panel is correctly sized for the pump. Many panels have a manual reset button for the thermostats on three phase units; this button must be pressed to reset the system after the pump has cooled. Single phase units automatically reset after the pump has cooled.

Control Panels:

All X-Series grinders shall be installed with controls equipped with correctly sized and adjusted overload protection devices. The control panel must be installed outside the hazardous area and appropriately isolated and sealed to prevent any potential ignition or explosion. Only approved controls that have intrinsically safe float switch connections may be used for X-Series Grinder pumps. The control and power cables cannot be spliced; a junction box may be used providing it is rated for hazardous locations and has approved cord connectors.

Pump Installation:

When connecting an explosion-proof pump in hazardous locations using a rail system, it must be of a non-sparking type design. Contact Liberty Pumps for available models such as GR20NS.

The water level in the sump is determined by the placement of the control floats and should be positioned such that the pump is completely submerged; if submersion isn't possible, the minimum water depth shall be no less than the depth defined from the bottom of the pump legs. The upper water level should be positioned to minimize pump starts. The alarm float shall be above the turn on float switch but below any inlets. No control should be set above the inlet to the sump.

After the pump(s) have been mounted and the cover sealed, install the remaining discharge line. Piping above the cover should include a union to facilitate pump removal. A check valve is recommended after the union to prevent the backflow of liquid after each pumping cycle. A gate valve should follow the check valve to allow periodic cleaning of the check valve or removal of the pump. The remainder of the discharge line should be as short as possible with a minimum number of turns, to minimize friction head loss. Do not restrict the discharge to anything smaller than the discharge connection of the pump. Larger pipe sizes may be required to eliminate friction head loss over long runs. Contact Liberty Pumps or other qualified person if there are questions regarding proper pipe size and flow rates.

©Copyright 2017 Liberty Pumps Inc. All rights reserved.

3. Installation Instructions

WARNING



RISK OF ELECTRIC SHOCK - Accidental contact with electrically live parts, items, fluid, or water can cause serious injury or death.

- Always disconnect the pump from its power source before handling.
- All electrical connections must be wired and grounded in accordance with the National Electrical Code and all applicable local codes and ordinances.
- Risk of electrical shock – Do not remove the power supply cord. All repairs and service must be performed by a repair facility approved by Liberty Pumps and certified to work on explosion proof motor enclosures.
- If power or control cord are damaged, or in need of replacement, contact Liberty Pumps for closest approved repair facility.
- All installations of pumps, controls, protection devices and general wiring should be done by a qualified licensed electrician. All electrical and safety codes should be followed for the National Electrical Code (NEC), the Occupational Safety and Health Administration (OSHA) and applicable local codes.
- Refer to articles 500 through 503 of the National Electric Code (NEC) for all electrical and wiring requirements in hazardous locations.

WARNING



RISK OF FIRE

- Risk of explosion or fire—hazardous locations contain explosive gases which can be detonated by sparking or electric shock.
- All terminations and penetrations of conduit or cable shall be done using approved materials and methods intended for use to mitigate the potential for explosion.
- All personnel shall be trained for safe work practices and procedures.
- All installations shall be in compliance with all applicable Federal, State, and Local codes for hazardous locations.

Electrical Installation Procedure

1. Verify that the pump model and control panel are the correct configuration and voltage. If using Liberty control panel, confirm that the panel is sized appropriately for the pump being controlled. See Table 2.
2. Terminate the leads for the power and control cords from the pump to the appropriate terminal blocks in the control panel. Reference wiring diagrams on the following page and control panel schematics provided with panel.
3. Install and wire the start relay and capacitors in the control panel. Refer to panel schematics for the proper connections.

©Copyright 2017 Liberty Pumps Inc. All rights reserved.

4. Connect the leads for the seal leak detection and the thermal overloads (3-phase models) to the panel. Proceed to set the seal leak relay by rotating adjustment clockwise until LED turns red, then turn adjustment counter clockwise slightly until LED has just changed back to green.
5. Route float wires and terminate to the corresponding terminals on the intrinsically safe (IS) barrier.
6. With main power disconnected, connect the pump power and control power to the panel according to schematics provided. Be certain that the power available will work with the power required by the controls and the pump.
7. With all electrical connections complete and secure, turn on power and verify operation of the pump, floats, and alarm circuits.
8. Verify that the rotation of the pump is in the correct direction as shown in figure 1. If correct, proceed to step 9.
9. If rotation is incorrect for a 3-phase pump, switch two power leads to the motor to reverse direction; for a single phase product please contact the factory.
10. Proceed with mechanical installation.
11. Route float wires and terminate to the corresponding terminals on the intrinsically safe (IS) barrier.
12. With main power disconnected, connect the pump power and control power to the panel according to schematics provided. Be certain that the power available will work with the power required by the controls and the pump.
13. With all electrical connections complete and secure, turn on power and verify operation of the pump, floats, and alarm circuits.
14. Verify that the rotation of the pump is in the correct direction as shown in figure 1. If correct, proceed to step 9.

⚠ CAUTION

CAUTION - Check 3-phase pumps for proper rotation prior to installing pump(s) in basin. To change rotation, reverse any two of the three power leads to the pump. Code the wires for reconnection after installation.

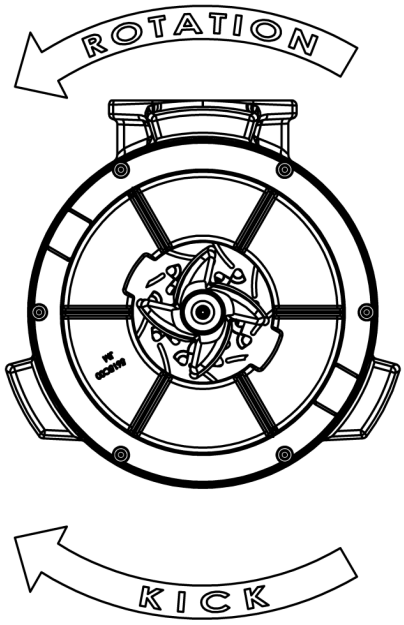

Figure 1

©Copyright 2017 Liberty Pumps Inc. All rights reserved.

X-SERIES GRINDER WIRING - SINGLE PHASE MODELS

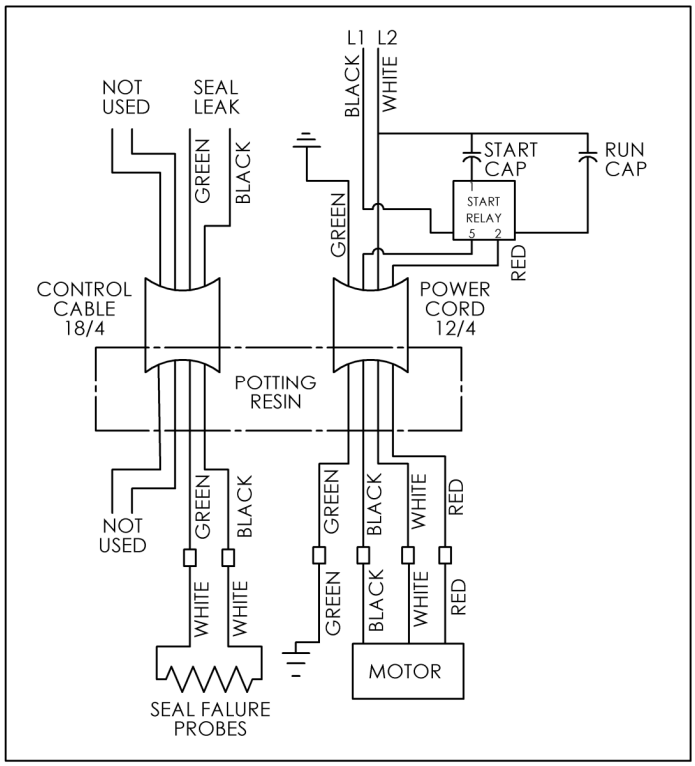

Figure 2

X-SERIES GRINDER WIRING - 3 PHASE MODELS

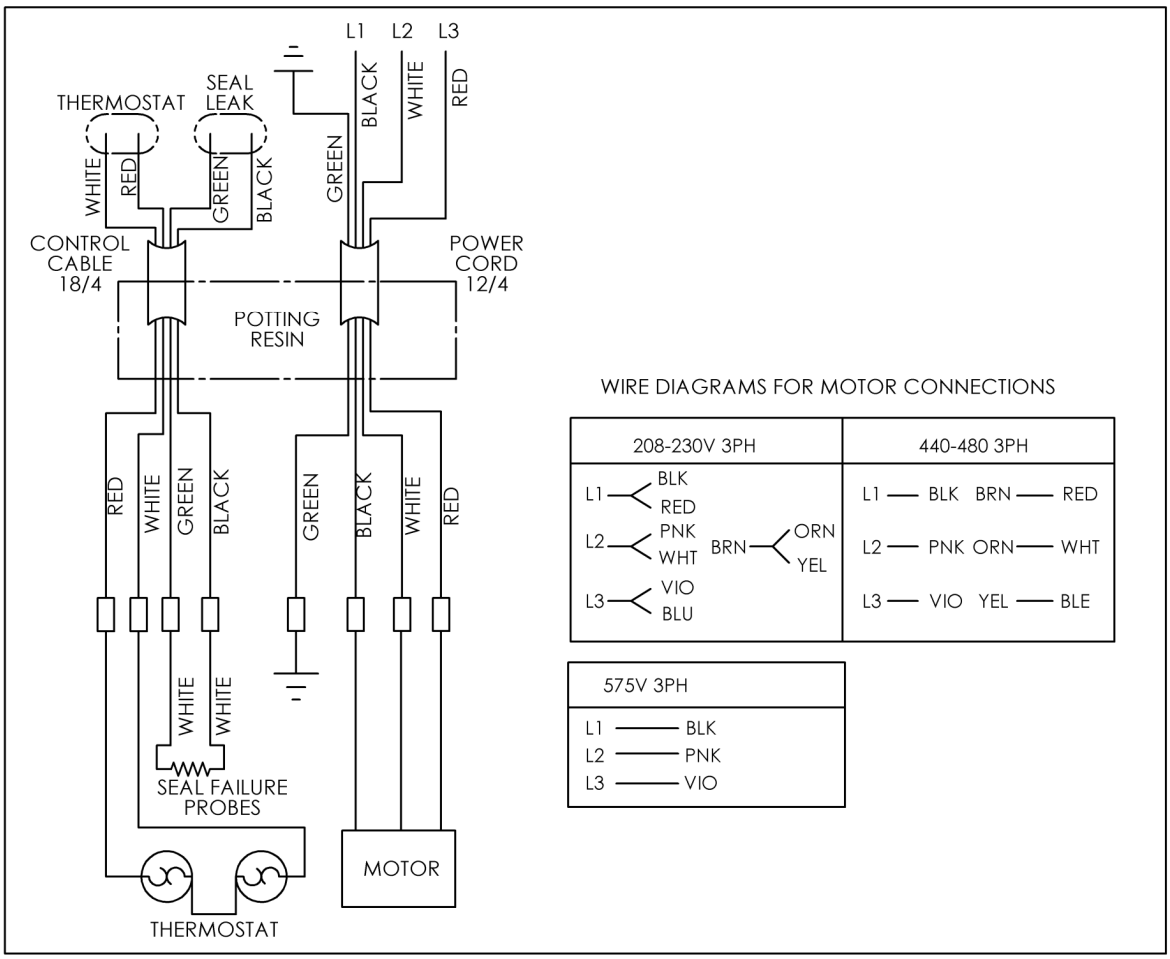

Figure 3

©Copyright 2017 Liberty Pumps Inc. All rights reserved.

WARNING



RISK OF FIRE - When working in a hazardous location, all precautions to minimize ignition sources such as spark and flame should be minimized to limit the potential for fire or explosion.

- Use non-sparking components to mitigate the risk of spark and explosion in hazardous locations.
- All electrical terminations shall be made according to Federal, State, and Local codes for hazardous or classified locations.
- All mechanical penetrations to the basin by cables or conduit shall be made according to specification and best practices associated with hazardous locations.
- Conduit, junction boxes, and associated components shall be approved for use with hazardous locations and installed according to specifications.

WARNING



RISK OF ELECTRIC SHOCK - Always disconnect the pump from power source prior to handling, set-up, or maintenance.

Mechanical Installation Procedure

1. Record the pump model, serial number, manufacture date, and installation date on the front page of this manual.
2. Complete a visual inspection of the pump prior to installation. Address any loose fasteners and missing or damaged parts. Contact Liberty Pumps with any concerns.
3. Complete an inspection of the tank or basin where the pump will be installed. Remove any construction debris or foreign material from the vessel.
4. If the pump is to be installed using a guide rail and base, verify the installation is correct and that all mounting hardware is tight.
5. Mount the guide rail claw components to the pump, being certain to tighten all fasteners as specified. Be sure all gaskets and components are present.
6. For installations not using a guide rail, complete all pump mounted plumbing at this time being sure to use all necessary sealants and hardware.
7. Place pump in basin, being sure the mounting interface (guide rail, torque stop, etc.) is engaged correctly.
8. Verify that all plumbing components in the tank or basin are installed correctly and that they are functional. Validate that any valves are open and ready for pump use.
9. Set the floats heights to control pump operation. The minimum process fluid level for safe pump operation shall not be less than 13 inches.
10. Complete any final connections to the pump.
11. Engage power to panel and pump
12. Run several cycles of water through the system to verify correct control operation for the installation. Be certain to complete adequate testing, especially on systems with multiple pumps or custom control configurations.

©Copyright 2017 Liberty Pumps Inc. All rights reserved.

4. Maintenance and Troubleshooting

Troubleshooting:

Many common operation issues are outlined in the troubleshooting matrix at the end of this section. Use this resource to diagnose and solve common problems which may occur with the pump or system. If problems persist, please contact your Liberty Pumps authorized representative.

Maintenance:

The pump must be serviced at a qualified hazardous motor enclosure repair facility approved by Liberty Pumps. Any unauthorized field repairs voids warranty and hazardous location ratings. Contact Liberty Pumps at 1-800-543-2550 to locate the closest repair facility.

The pump must be pulled from the sump; prior to any service - disengage electrical power to the pump prior to performing any work.

⚠ CAUTION



CAUTION - Sewage water gives off methane and hydrogen sulfide gases which are poisonous. Proper personal protection equipment should be worn.

In the event the pump becomes clogged, the inlet screen can be removed to gain access to the pump's impeller. Once the obstruction is removed the anti air lock hole should be cleaned.

The lower shaft seal is field serviceable; a certified repair shop should perform this task because they have the capability to clean and flush the mid oil chamber.

This is the only work or maintenance that can be performed. All other maintenance or service such as cord replacement requires a certified repair shop. Contact Liberty Pumps at 1-800-543-2550 to locate the closest authorized hazardous duty motor repair shop.

***NOTE:** Liberty Pumps, Inc. assumes no responsibility for damage or injury due to disassembly in the field. Disassembly, other than at Liberty Pumps or its authorized service centers, automatically voids warranty.

⚠ WARNING



RISK OF ELECTRIC SHOCK - Accidental contact with electrically live parts, items, fluid, or water can cause serious injury or death.

Power cord and control cord replacement:

The power cord and control cord are not field replaceable. If either cord is compromised the entire pump must be brought to a qualified hazardous motor enclosure repair facility approved by Liberty Pumps. Any unauthorized field repairs voids warranty and hazardous location ratings. Contact Liberty Pumps at 1-800-543-2550 to locate the closest repair facility.

©Copyright 2017 Liberty Pumps Inc. All rights reserved.

Problem	Cause	Correction
Pump will not run.	• Tripped breaker or other interruption of power; improper voltage.	• Reset breaker by pushing completely down on the handle then back to the on
		• Have an electrician check all wiring for proper connections and adequate voltage
	• Switch is unable to move to the “turn on” position due to interference with the side	• Position the pump or switch so that it has adequate clearance for free operation.
	• Insufficient liquid level.	• Make sure the liquid level is allowed to rise enough to activate switch(s).
	• Defective switch.	• Remove and replace switch.
	• Internal motor short.	• Requires an authorized service center.
Pump will not turn off.	• Switch(s) unable to move to the “turn off” position due to interference with the side of basin or other obstacle.	• Position the pump or switch so that it has adequate clearance for free operation.
	• Defective switch.	• Remove and replace switch.
Pump runs or hums, but does not pump.	• Stuck / defective motor contactor.	• Replace motor contactor in panel.
	• Discharge is blocked or restricted.	• Check the discharge line for foreign material, including ice if the discharge line
	• Check valve is stuck closed or installed backwards.	• Remove check valve(s) and examine for freedom of operation and proper installation.
	• Gate or ball valve is closed.	• Open gate or ball valve.
	• Total lift is beyond pump's capability.	• Try to route piping to a lower level. If not possible, a larger pump may be required.
	• Pump impeller is jammed or volute casing is plugged.	• Remove the pump from the basin. Detach the pump base and clean the area around the impeller. Reassemble and
	• Pump is air locked.	• Clear anti-air lock hole.
		• Add baffle to reduce entrained air bub-
	• Capacitor failure.	• Check caps and replace if needed.
Pump runs periodically when fixtures are not in use.	• Check valve was not installed, is stuck open or is leaking.	• Remove check valve(s) and examine for freedom of operation and proper installation.
	• Fixtures are leaking.	• Repair fixtures as required to eliminate
Pump operates noisily.	• Foreign objects in the impeller cavity.	• Remove the pump from the basin. Detach the pump base and clean the area around the impeller. Reassemble and
	• Broken impeller.	• Consult the factory for information regard-
	• Worn bearings.	• Return pump to the factory or authorized
	• Piping attachments to building are too rigid.	• Replace a portion of the discharge line with rubber hose or connector.
Seal fail light is illuminated.	• Lower seal has been compromised.	• Replace lower seal.
	• Relay sensitivity is incorrect.	• Decrease sensitivity by turning the dial. Proper range is 75 to 125.

©Copyright 2017 Liberty Pumps Inc. All rights reserved.

5. 3-Year Limited Warranty

Liberty Pumps, Inc. warrants that its products are free from all factory defects in material and workmanship for a period of 3 years from the date of purchase. The date of purchase shall be determined by a dated sales receipt noting the model and serial number of the pump. The dated sales receipt must accompany the returned pump if the date of return is more than 3 years from the "CODE" (date of manufacture) number noted on the pump nameplate.

The manufacturer's sole obligation under this warranty shall be limited to the repair or replacement of any parts found by the manufacturer to be defective, provided the part or assembly is returned freight prepaid to the manufacturer or its authorized service center, and provided that none of the following warranty-voiding events have taken place.

The manufacturer shall not be liable under this warranty if the product has not been properly installed; if it has been disassembled, modified, abused or tampered with; if the electrical cord has been cut, damaged or spliced; if the pump discharge has been reduced in size; if the pump has been used in water temperatures above the advertised rating, or in water containing sand, lime, cement, gravel or other abrasives; if the product has been used to pump chemicals or hydrocarbons; if a non-submersible motor has been subjected to excessive moisture; or if the label bearing the serial, model and code number has been removed. Liberty Pumps, Inc. shall not be liable for any loss, damage or expenses resulting from installation or use of its products, or for indirect, incidental, and consequential damages, including costs of removal, reinstallation or transportation.

THE WARRANTIES SET FORTH ABOVE ARE IN LIEU OF ALL OTHER WARRANTIES, EXPRESSED OR IMPLIED, INCLUDING WITHOUT LIMITATION, ANY WARRANTY OF MERCHANTABILITY OR FITNESS FOR A PARTICULAR PURPOSE, AND ALL SUCH OTHER WARRANTIES ARE HEREBY DISCLAIMED AND EXCLUDED BY LIBERTY PUMPS, INC.

Liberty Pumps

7000 Apple Tree Avenue
Bergen, NY 14416
Phone: (800) 543-2550
Fax: (585) 494-1839
www.libertypumps.com

©Copyright 2017 Liberty Pumps Inc. All rights reserved.

Section 3.3.4

Level Switch

Ktech INDUSTRIAL PRODUCTS INC.

Model FS401 Overfill Protection Device Installation Instructions
Part No.: FS401E-4

CAUTION: REFER TO INSTRUCTIONS BEFORE OPERATING OR SERVICING SWITCH.
Construction: ½" O.D. ss stem, 2" dia. 316 ss float, 2" NPT bushing, explosion proof J-box. Switch set-point distances are measured from the underside of the 2" NPT bushing to the center of the float at the level where the switch is activated. Switch set-point distances are not field adjustable. They are factory-set as specified on the purchase order. The contact arrangement may be changed from normally open (NO) to normally closed (NC) and vice versa. Turn over the float and return the stop collars to their original positions. If the contact arrangement is altered, use an ohmmeter to test that the switch operates correctly. Screw the float switch into the 2" NPT opening on top of the tank. The conductors are colour coded to identify each switch. The switch must be connected in series with a load.

DO NOT CONNECT THE SWITCH DIRECTLY ACROSS THE POWER SUPPLY.
The voltage / current product must not exceed the power rating.

Electrical Specifications

Maximum Switching Voltage Volts DC/AC	120
Maximum Switching Current Amps DC/AC	1.0
Maximum Switching Power Volt/Amps DC/AC	100
Operating Temperature Range	-25˚C to 90˚C -13˚F to 194˚F

LISTED
OVERFILL
PROTECTION
DEVICES
4YC9

Intertek
9700099

Meets Standards:
Class 1 Division 1, Groups B,C,D
CSA C22.2 No. 1010-1 and ANSI/I SA S82-03
CSA C22.2 No. 30 and UL1203
Factory Sealed

MINIMUM SETPOINT DISTANCE FROM TOP IS 2"
MINIMUM SETPOINT DISTANCE BETWEEN CONTACTS IS 3"
MINIMUM SETPOINT DISTANCE FROM BOTTOM IS 2 1/2"

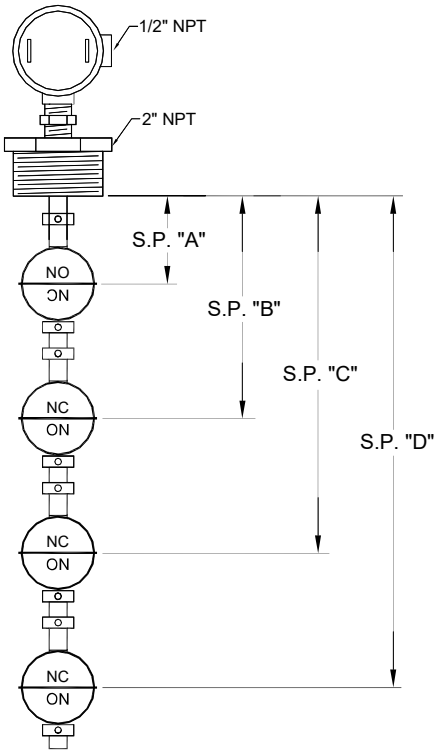

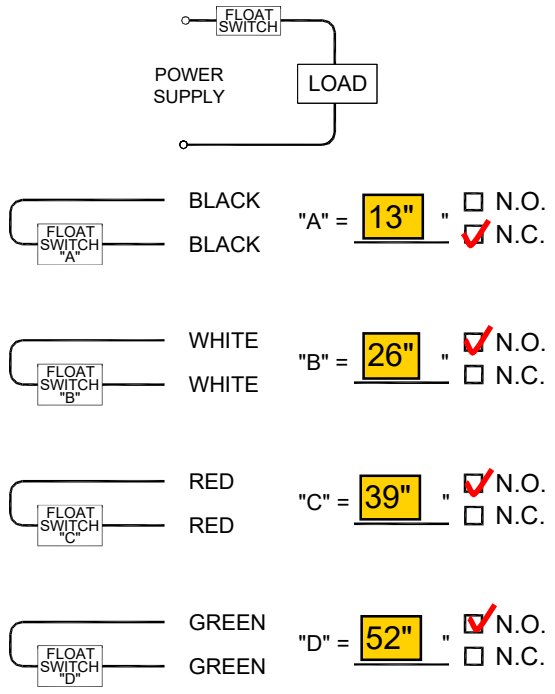

Section 3.3.5

MBBR Blowers

SCL K03 / K04 / K05 / K06
MS SERIES
SN 1874-15B 1/2

TECHNICAL CHARACTERISTICS
- Aluminium alloy construction
- Smooth operation
- High efficiency impeller
- Maintenance free
- Mountable in any position
- Recognized TEFC - cURus motor

OPTIONS
- Special voltages (IEC 38)
- Surface treatments

ACCESSORIES
- Inlet and/or inline filters
- Additional inlet/outlet silencers
- Safety valves
- Flow converting device
- Optional connectors

Dimensions in inches.
Dimension for reference only.

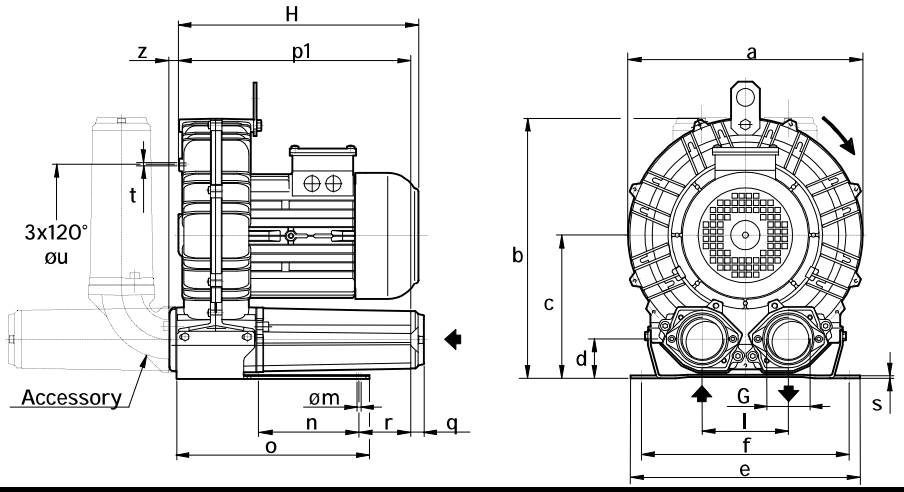

Model	a	b	c	d	e	f	G	l	m	n	o	p1	q	r	s	t	u	z
K03-MS	9.49	10.55	5.79	1.69	9.06	8.07	1"1/4 NPT	3.39	0.39	3.27	5.59	8.07	0.71	2.95	0.16	M6	5.51	0.47
K04-MS	11.22	12.40	6.77	1.93	10.04	8.86	1"1/2 NPT	4.02	0.47	3.74	6.73	8.74	0.71	2.76	0.16	M6	6.89	0.71
K05-MS	12.87	14.37	7.87	2.13	12.80	10.24	2" NPT	4.72	0.59	4.53	10.43	12.60	0.71	3.86	0.16	M8	7.87	0.75
K06-MS	14.80	15.47	8.07	2.13	12.80	11.42	2" NPT	4.92	0.59	5.51	10.71	13.15	0.71	3.35	0.16	M8	9.45	0.75

Model	Maximum flow Scfm		Installed power Hp		Maximum differential pressure △p (In WG)		Noise level Lp dB (A) (1)		Overall dimensions H	Weight
	60 Hz 3500 rpm	50 Hz 2900 rpm	60 Hz 3500 rpm	50 Hz 2900 rpm	60 Hz 3500 rpm	50 Hz 2900 rpm	60 Hz 3500 rpm	50 Hz 2900 rpm	Inches	Lbs
K03-MS	52	43	3/4	3/4	64	60	62.0	60.0	10.43	24.3
			1	1	95	72	62.3	60.3	12.0	32.0
K04-MS	98	81	1 ½	1 ½	58	80	64.8	62.8	11.65	40.3
			2	2	85	100	65.0	63.0	14.20	56.8
			3	-	120	-	65.2	-	14.20	58.4
K05-MS	156	129	2	2	52	70	70.5	68.5	13.20	56.7
			3	3	80	110	70.8	68.8	13.20	60.6
			4	4	120	120	71.1	69.1	14.40	77.2
K06-MS	216	179	3	3	40	65	73.0	71.0	13.80	69.0
			4	4	64	95	73.3	71.3	14.17	82.5
			5 ½	5 ½	110	130	73.6	71.6	15.5	85.3
			6 1/5	-	122	-	73.9	-	16.3	95.5

(1) Noise measured at 1 m distance with inlet and outlet ports piped, in accordance to ISO 3744.

- For proper use, the blower should be equipped with inlet filter and safety valve; other accessories available on request.
- Ambient temperaturefrom +5° to +104°F.
- Specifications subject to change without notice.

SCL K03 / K04 / K05 / K06
MS SERIES
SN 1874-15B 2/2

CAPACITY

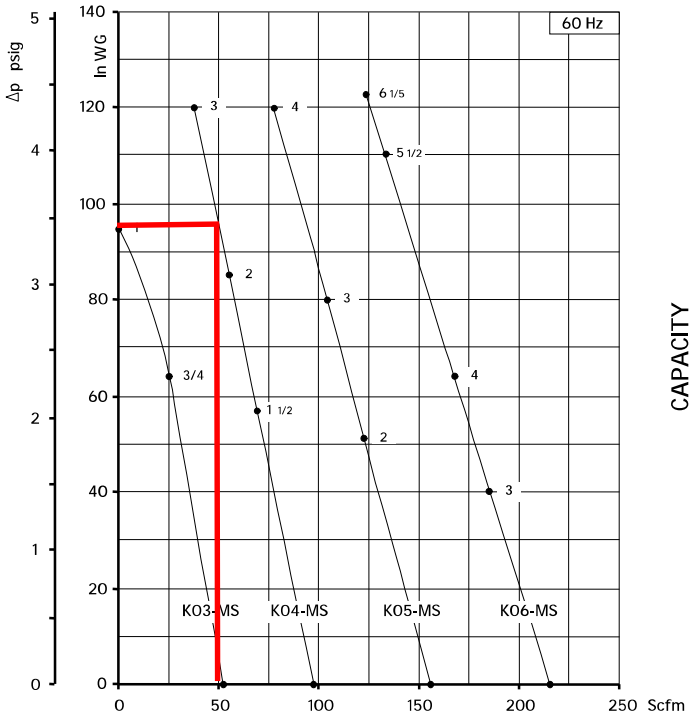

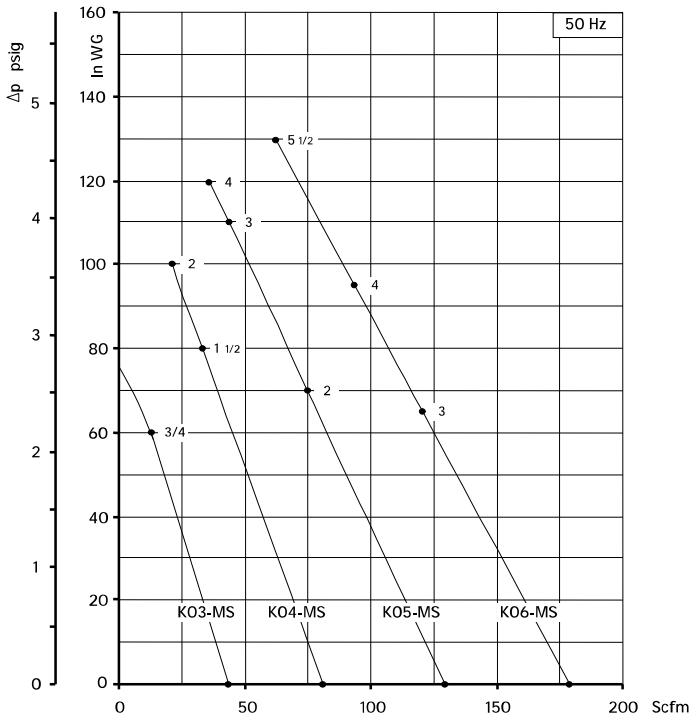

ABSORBED POWER

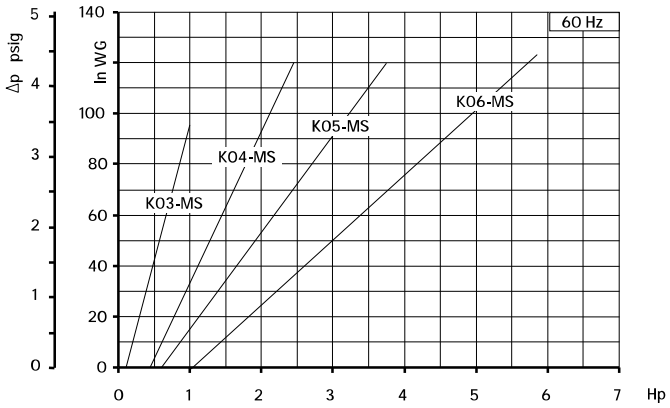

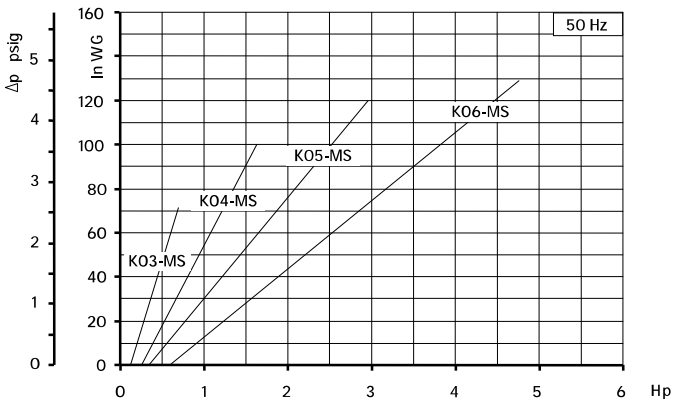

TEMPERATURE INCREASE

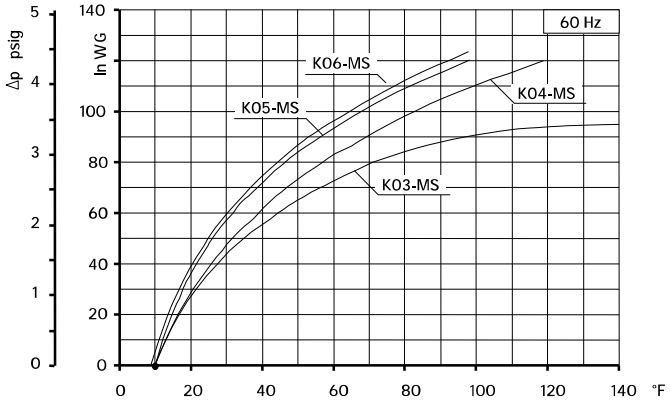

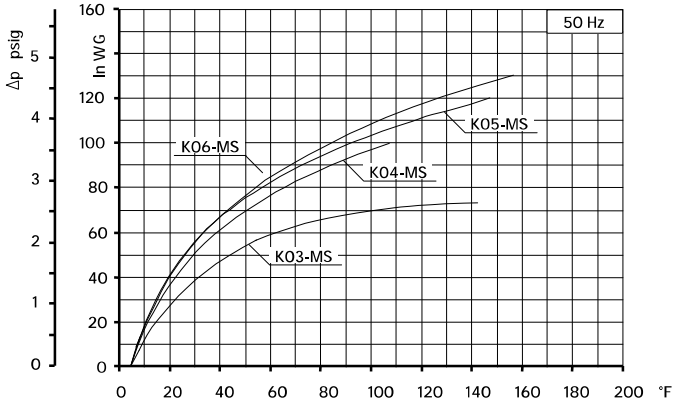

Curves refer to air at 68°F temperature and 29.92 In Hg atmospheric pressure (abs) measured at inlet port.
Values for flow, power consumption and temperature rise: +/- 10% tolerance.
Data subject to change without notice.

Safety Valves

SN 1733 -7 1/1

The VRL valves are designed to protect blowers and / or motors from over pressurization or excess vacuum. When there is over pressurization, the valve opens and discharges to the outside. When there is excess in vacuum, the valve opens and takes flow from outside.

The valves have been designed for low pressure / low vacuum, with minimal difference between the initial value at which the valve begins to open and its fully opened position. The valves are supplied with 2 different springs to maximize their efficiency.
These compact valves, made of aluminum alloy, are both easy to install and calibrate, and operate in a wide range of capacities.
The VRL can be plumbed to divert excess primary flow through a secondary external outlet when working in pressure conditions, or to pipe in a secondary flow when working in vacuum.
"HP" valves are used for pressures >240" H2O.

Maximum efficiency is achieved by keeping operating values (flow versus pressure or vacuum) within the operating range (shaded area on graph). Capacity refers to air having a density equal to 0.075 lbs./cu.ft .



VRL6 VRL6 HP | VRL8 VRL8 HP | VRL9

OPERATING RANGE

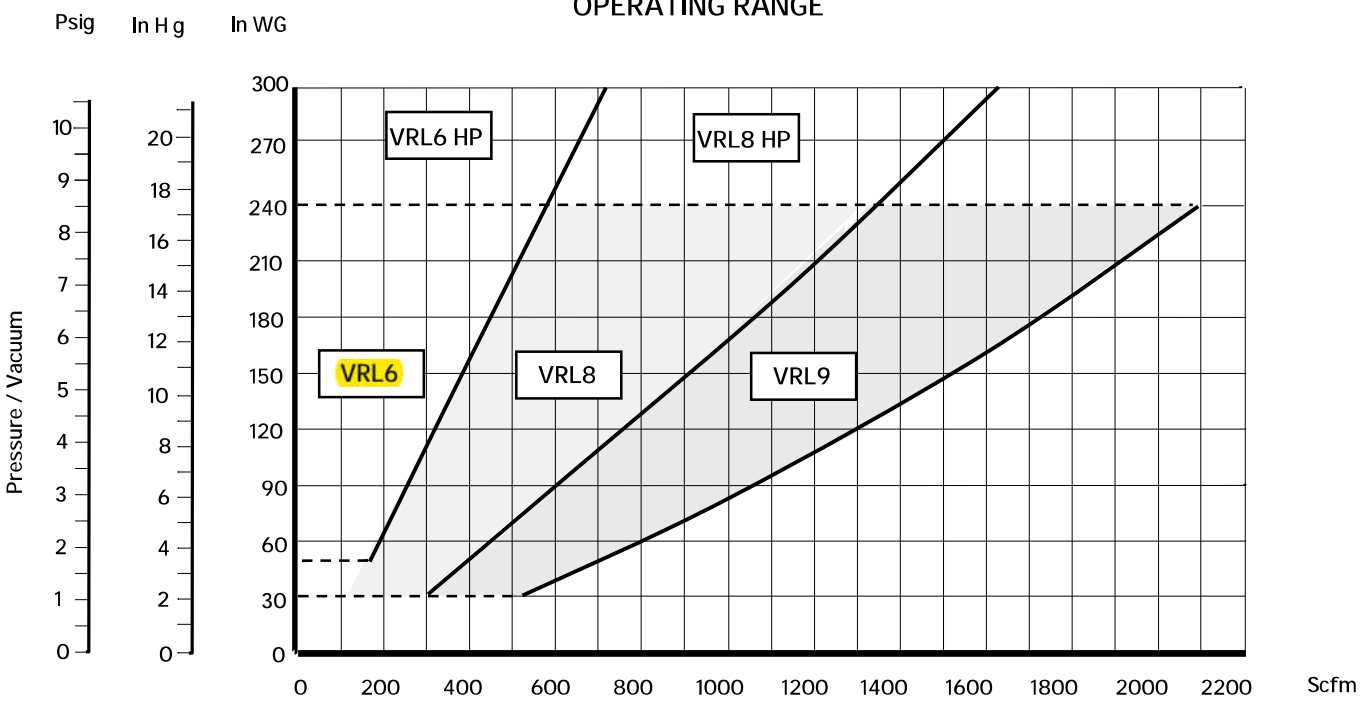

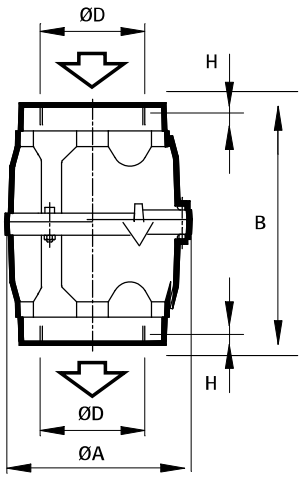

OVERALL DIMENSIONS

TYPE	ND	D	A	B	H	WEIGHT (Lbs)
VR6 & VRL6 HP	2"	2" NPT	4.02	6.90	0.47	1.9
VRL8 & VRL8HP	3"	3" NPT	5.31	7.48	0.59	4.2
VRL9	4"	4" NPT	6.30	8.11	0.71	5.7

- Dimensions in inches.
- Specifications subject to change without prior notice.

VRL valves are supplied uncalibrated - contact FPZ for calibration options.

FPZ, Inc. 150 N. Progress Drive Saukville, WI 53080 USA Tel. (262) 268-0180 usa@fpz.com www.fpzusa.com

Gauges, Check Valves, Silencers, Enclosures

SS1708

Gauges

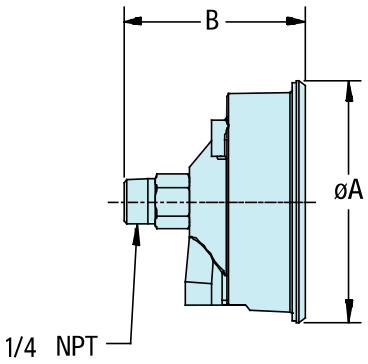

Gauges are important for monitoring the operating pressure or vacuum of the blower. Gauges should be positioned as close to the blower as possible.

*				

Dimensions in inches. Tolerance on given values ± 10% - unbinding and can be changed without prior notice.
*

Check Valves

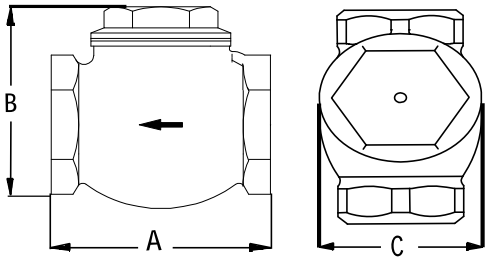

Swing check valves allow air to flow in one direction. These valves prevent backflow into the blower and are supplied in bronze or brass.

Dimensions in inches. Tolerance on given values ± 10% - unbinding and can be changed without prior notice.

Silencers

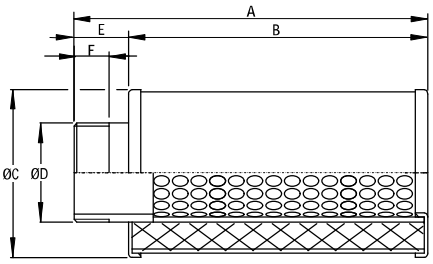

Silencers provide additional sound attenuation.

TYPE	D	A	B	C	E	F	lbs
SS 4	1" 1/4	7.5	5.5	2.8	2	0.6	0.8
SS 5	1" 1/2	7.9	6.7	3.1	1.2	0.8	1.1
SS 6	2"	9.1	7.9	3.5	1.2	0.8	1.3
SS 8	3"	19.1	15.7	6.0	3.3	0.8	4.8
SS 9	4"	18.3	16.9	6.7	1.1	0.8	9.9

Steel manufactured (apart from SI 9 / SS 9 - entirely in aluminium) with sound absorbing polyurethane element.
Dimensions in inches. Tolerance on given values ± 10% - unbinding and can be changed without prior notice.

Sound Enclosures

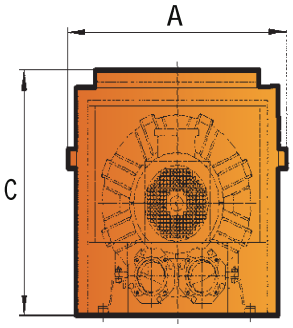

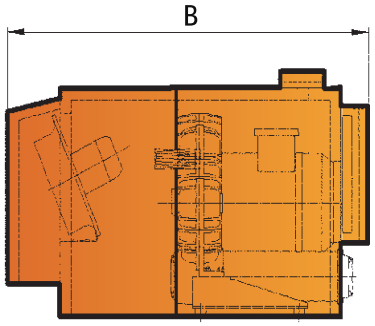

Part #	Used on models	A	B	C
IH1	SCL KO3-MS	13.4	18.2	15.8
IH3	SCL KO4-MS	14.3	19.7	16.5
IH5	SCL KO5-6 MS + 30-40DH	16.9	26.8	21.3
IH7	SCL KO7-8 MS / MD	31.7	64.4	26
IH8	SCL KO7-8 TD	31.7	64.4	26
IH9	SCL KO7-8 TS	31.7	64.4	26
IH10	SCL KO9-12 MS/MD	31.7	67.2	30
IH11	SCL KO9-10 TD	31.7	67.2	30
IH12	SCL K11-TD	31.7	67.2	30
IH13	SCL KO9-11 TS	31.7	67.2	31.5

Dimensions in inches - unbinding and can be changed without prior notice.

Inlet Filters

SS1905

FPZ inlet filters are used for pressure applications. The inlet filters combine filtration and sound attenuation into a compact package. Inlet filters consist of a filter cartridge enclosed by a carbon steel weather hood. Elements are easily serviceable by simply removing the weather hood.

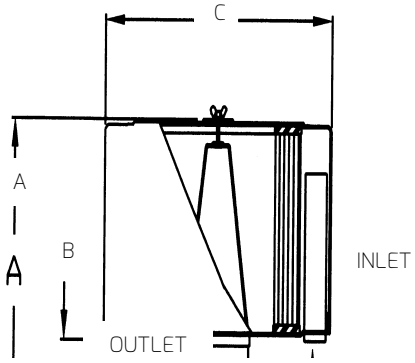

Dimension tolerance ± 1/8"



VG-020-013



FEATURES & SPECIFICATIONS

- Polyester: 99%+ removal efficiency standard to 5 micron. (Other media available upon request.)
- Fully drawn weather hood - no welds to rust or vibrate apart
- Tubular silencing design - tube is positioned to maximize sound attenuation and air flow while minimizing pressure drop
- Durable carbon steel construction with baked enamel finish
- Filter change out differential: 10"-15" H_2O Over Initial Delta P.

OPTIONAL DIRTY FILTER INDICATOR

The **VG-020-013** dirty filter indicator is used to maximize filter life for pressure applications only. The yellow indicator in the site window drops as dirt accumulates on the filter element. The element is ready for change out or servicing when the yellow indicator reaches the red zone. The filter condition can be determined without removing the weather hood even after the blower has been shut down.

The indicator can be mounted in the inlet piping between the blower and filter or directly to the filter housing by having a 1/8" npt tap installed in the hood. If a tap is required, FPZ part number **M020*** should be ordered.

Polyester Element	NPT	Dimensions (Inches) A	B	C	Used on Models	Approx Wt. Lbs
FS-15-050	½"	4	1 ½	6	10DL	2
FS-15-075	¾"	4	1 ½	6	15DH	2
FS-15-100	1"	4	1 ½	6	06	2
FS-19P-125	1 ¼"	6 5/8"	1 5/8"	6	K03-MS, R20-MD, R30-MD, R40-MD	3
FS-19P-150	1 ½"	6 5/8"	1 5/8"	6	K04-MS	4
FS-31P-200	2"	7 ¼"	2 ¼"	10	K05-MS, K05-TD	8
FS-231P-200	2"	12 ¼"	2 ¼"	10	K06-MS, K06-TD, K07R-MD, K08R-MD	14
FS-231P-300	3"	13"	3"	10"	K07-MS, K05-TS, K07-TD	15
FS-235P-300	3"	13"	3"	16"	K08-MS, K06-TS, K08-TD	29
FS-235P-400	4"	14"	4"	16"	K09-MS, K10-MS, K09-MD, K10-MD, K11-MD, K12-MD, K09-TD, K10-TD	30
FS-245P-400	4"	14"	4"	16"	K07-TS, K08-TS, K11-MS, K12-MS, K11-TD, K12TD	31
FL10**	NA	14 3/8"	1 3/8"	16 3/16"	K09-TS, K10-TS, K11-TS, K12-TS,	18

*M020 1/8" npt filter tap will be added to filter part number suffix if ordered.

**FL10 utilizes 15 micron paper element and does not include tubular silencers. FL10 filters are normally ordered with CA10

FPZ S.p.A.
Via F.lli Cervi 16
20863 Concorezzo (MB), ITALIA
Tel. +39 039 690981
info@fpz.com www.fpz.com

COMPRESSORI-ASPIRATORI A CANALE LATERALE — ISTRUZIONI — I
LATERAL CHANNEL BLOWERS-EXHAUSTERS — INSTRUCTIONS — GB



WARNING

Leggere e seguire le istruzioni prima dell'uso e conservare il manuale come riferimento per il futuro. Il mancato rispetto di tutte le istruzioni del produttore, inclusa l'installazione impropria o l'uso improprio del prodotto, le alterazioni del prodotto e/o il mancato utilizzo del prodotto in conformità al presente manuale, possono causare danni, lesioni gravi o morte. — I

Read and follow all instructions before use and keep manual for future reference. Failure to comply with all manufacturer's instructions, including improper installation or use of the product, alterations to the product, and/or failure to use the product in accordance with this manual can result in property damage, serious injury or death. — *GB*

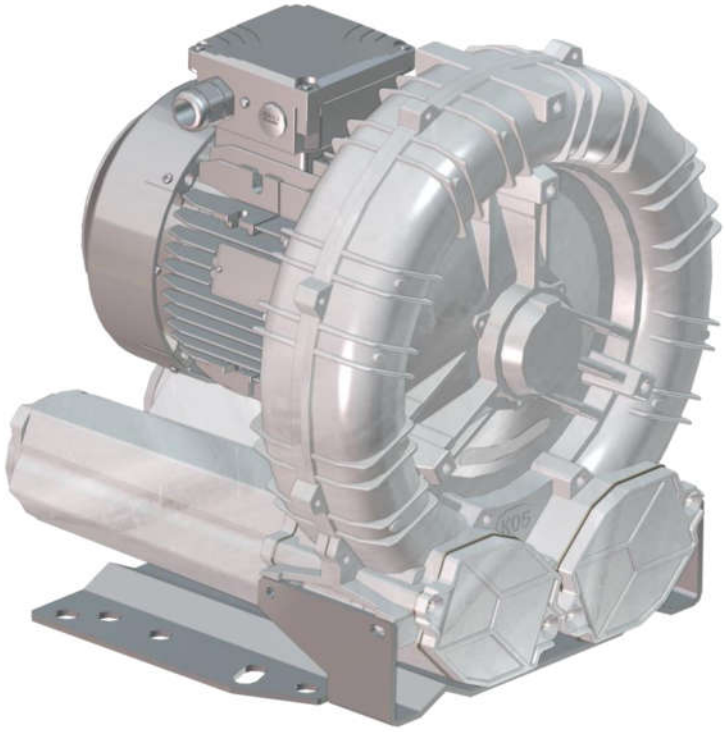

Per ulteriori informazioni o assistenza all'installazione, prego contattare:
For further information or assistance with installation, please contact:

@ service@fpz.com +39 039 690981

COMPANY WITH
QUALITY SYSTEM
CERTIFIED BY DNV GL
= ISO 9001 =

FPZ S.p.A.
Via F.lli Cervi 16
20863 Concorezzo (MB), ITALIA
Tel. +39 039 690981
info@fpz.com www.fpz.com

Table of contents

1 GENERAL INFORMATION 3
1.1 PURPOSE OF MANUAL 3
1.2 TECHNICAL DATA – NAMEPLATE 3
1.3 TESTING, WARRANTY AND LIABILITY 3
2 SAFETY RULES 4
2.1 IMPORTANT SAFETY INFORMATION 4
2.2 PROHIBITIONS 4
3 PROPER AND IMPROPER USE 5
3.1 OPERATING CONDITIONS 5
3.2 STANDARD SIDE CHANNEL BLOWER 5
3.3 ATEX BLOWERS (Category 3GD – Category 2G) 5
3.4 IMPROPER USE AND ASSOCIATED RISKS 6
4 STORAGE AND TRANSPORT 7
4.1 RECEIPT AND CHECK OF THE PACKAGE 7
4.2 HANDLING AND TRANSPORT 7
4.3 STORAGE 7
5 INSTALLATION 7
5.1 INSTALLATION CONDITIONS 7
5.2 BLOWER WITHOUT ELECTRIC MOTOR (GOR – GVR EXECUTION) 9
5.3 ATEX 2G BLOWER (EXCLUDED TMD VERSION) 9
5.4 GOR TMD ATEX 2G BLOWER 9
5.4.1 INSTALLATION OF SENSOR GOR TMD ATEX 2G BLOWERS 10
5.4.2 CONNECTION OF THE MECHANICAL SEAL FOR GOR TMD ATEX 2G BLOWER 11
5.5 ELECTRIC MOTOR 12
5.5.1 ELECTRIC CONNECTION 12
5.5.2 ELECTRIC MOTOR POWERED BY FREQUENCY CONVERTER 13
5.5.3 ROTATION DIRECTION 13
6 START UP AND NORMAL OPERATION 13
6.1 PRELIMINARY CHECKS 13
6.2 OPERATION 13
6.3 STOPPING 14
7 MAINTENANCE 15
7.1 MAINTENANCE AND FAILURE CONDITIONS 15
7.2 PERIODICAL CHECKS 16
7.3 ROUTINE MAINTENANCE REPAIR OF BREAKDOWNS 16
7.4 LIFESPAN OF BEARINGS 17
7.5 DISMANTLING AND DEMOLITION 17
8 RESIDUAL RISKS 17
9 TROUBLESHOOTING 18
10 REFERENCES 19
11 INSTALLATION DIAGRAMS 20

FPZ S.p.A.
Via F.lli Cervi 16
20863 Concorezzo (MB), ITALIA
Tel. +39 039 690981
info@fpz.com www.fpz.com

1 GENERAL INFORMATION

Read the manual for safety information on correct installation, operation and maintenance.

1.1 PURPOSE OF MANUAL

- The purpose of the manual is to complete the information contained in the *operative instructions* (Figure 1*)* supplied with the blower in order to give "instructions for use" to the skilled operator to prevent and minimize risks during the interaction between man and machine.
- For safe installation, carefully read this manual before installing the product and follow all instructions exactly as shown.
- The information was prepared by the manufacturer in the original language (ITALIAN) considering the content communication effectiveness for the interested parties also depending on the operator's qualifications and perspicacity.
- Keep the *operative instructions* (Figure 1*)* for the entire service life of the unit in a known and easy to access place to make it always at hand for reference.
- Any observations made by recipients can be an important contribution to improve the after-sales services provided by the manufacturer.
- The information contained in this manual is intended for use by specialized operators whose definition is contained in the document MAN_PIC (Figure 2).
- For electric components and motors that may be installed to the blower, please refer to the manuals of their own manufacturers.

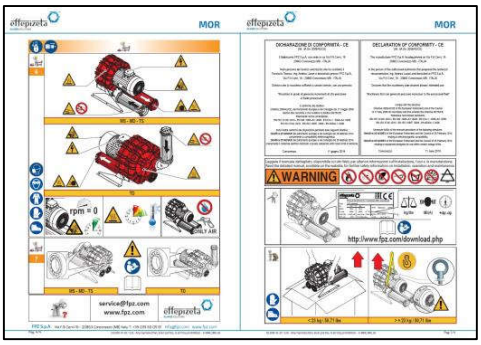

Figure 1 – *Operating Instruction*



Figure 2 - Document MAN_PIC

1.2 TECHNICAL DATA – NAMEPLATE

On the product nameplate are stated:

• Unit description • Performance (Noise [dB], Flow [m^3/h] and Pressure [mbar]) at 50 Hz and 60 Hz frequency referring to 20°C and 1013 mbar abs. • Serial number and year of manufacture • Reference Doc. (*Operating Instruction)* • Weight [kg/lbs] • Reference temperature for the working blower (T. amb.)	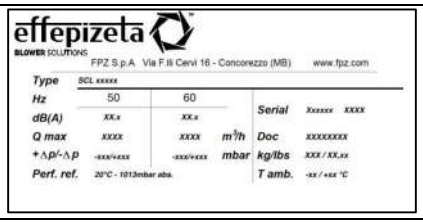

It is strictly forbidden to remove or tamper with the product label.

1.3 TESTING, WARRANTY AND LIABILITY

Testing and inspection

- The entire unit is sent to the customer ready for installation, after passing the tests and inspections required by the manufacturer, in conformity with the applicable laws and the mandatory technical standards.

Warranty

- Warranties are defined in the general terms and conditions of sale.

Liability

- See document MAN_PIC.

2 SAFETY RULES

2.1 IMPORTANT SAFETY INFORMATION

WARNING	**The instructions listed below must be read carefully and become a fundamental part of daily procedures in the normal use and maintenance of all the equipment, in order to prevent any kind of personal or domestic animals (even serious) injury (or death) or damage to equipment.**

- Do not start the unit until its operation is clearly understood.
- All installation, commissioning and maintenance operations must be carried out by specialized operators only (see doc MAN_PIC).
- Keep the area around the unit constantly free of obstructions.
- Use appropriate PPE (Personal Protective Equipment) such as boots, gloves, goggles and work clothes.
- Pay attention to all danger and caution signs placed on the unit.
- Do not wear clothes, jewellery or accessories that can get caught in the cooling fan of the electric motor or that can be sucked into the blower.
- Do not modify the electrical connections on the unit.
- Observe all local, state and national electrical codes.
- Before starting the unit and/or with weekly frequency, the operator must check the efficiency of the devices that ensure the operation of the unit and any other unit defects. In case of any defects, immediately notify FPZ S.p.A.
- Devices that ensure the operation of the unit must never be removed or rendered useless.
- During maintenance or repair work, it may be necessary to exclude some mentioned devices from the service. This operation must be carried out by specialized operators only (see doc MAN_PIC).
- Always apply and enforce the safety rules; in case of any doubts, always consult this manual before acting.

WARNING	**Non-compliant installation with the unit's intended use can cause personal (even serious) injury (or death) or damage to equipment.**

The unit must only be started:

- in conformity with the purposes of use, transport and handling specified in "FORESEEN USE";
- respecting the values given in the nameplate data.

2.2 PROHIBITIONS

WARNING	**Failure to comply the following PROHIBITIONS can cause personal (even serious) injury (or death) or damage to equipment.**

- NEVER suck up and convey aggressive, corrosive, and/or harmful fluids.
- NEVER use the unit under conditions that differ from those indicated on the nameplate.
- NEVER use the unit without having installed a suction filter.
- NEVER operate with the suction and/or delivery openings closed.
- NEVER make conversions or changes to the unit, maintenance or repair work on one's own initiative or not envisaged in the manual. Maintenance work can be carried out only in compliance with what is described in this user manual, exclusively by specialized operators (see document MAN_PIC).
- NEVER use the unit in places where ATEX classification does not comply with Annex II of Directive 1999/92/EC.
- NEVER use the unit without having first installed and connected the sensors and/or regulators required to the plant and correctly installed and checked the seal system of the machine.
- NEVER use the unit with ambient temperatures below -15°C (+5°F) and above +40°C (+104°F).
- NEVER use the unit before ensuring correspondence between grid voltage and motor label voltage.

3 PROPER AND IMPROPER USE

3.1 OPERATING CONDITIONS

WARNING **Failure to observe the temperature, altitude, differential pressure and filtering modes for design and operation specifications there can be an impeller break which can cause personal (even serious) injury (or death) or damage to equipment .**

- The maximum permissible differential pressure indicated on the product nameplate must never be exceeded.
- It is important to install the unit at a maximum altitude of 1000 m (3300 ft.) above sea level, for higher altitudes contact FPZ.
- The unit is designed to operate at ambient temperature between -15°C (+5°F) and +40°C (+104°F).
- In case of suction in the environment or on the plant, protect the suction pipe using a suitable filter with a maximum degree of filtration of 25µm. Contact FPZ for filters with a different filtration degree. Check the compliance with the data of maximum pressure/vacuum listed on the nameplate. For ATEX blower we recommend an ATEX filter with a filtration degree of 20 µm / 25 µm.
- Installation, operation and maintenance of the blower must be carried out by specialized operators (see document MAN_PIC). Due to incorrect maintenance or an unauthorized modification, a non-compliant condition of use is determined, so the responsibility lies with the customer or end user.

NOTICE If installed outdoors, protect the unit against exposure to sunlight and to atmospheric agents.
If the flow rate has to be reduced, use a draw-off valve rather than throttling back the suction or delivery lines.

3.2 STANDARD SIDE CHANNEL BLOWER

FPZ side channel blowers / exhausters are designed to generate vacuum and overpressure for conveying non-explosive, non-flammable, non-dangerous gases and air in continuous use in a non-explosive environment. Side channel blowers are not designed to transport dusts of any grain size.

FPZ side channel blowers / exhausters are designed and built for use in industrial plants and are equipped with three-phase or single-phase asynchronous bipolar electric motors in compliance with IEC 60034-1.

3.3 ATEX BLOWERS (Category 3GD – Category 2G)

Atex blowers are designed and built in accordance with 2014/34/UE Directive and European standards EN 1127-1, EN 80079-36, EN 80079-37, EN 14986, considering the compatibility of unit components with treated fluids (contact FPZ for components compatibility details). Accessories and monitoring systems linked to the unit have to be compliant with 2014/34/UE Directive.
It is recommended that the connections and suction and delivery pipes are in metal or antistatic material.

Units are group II devices for use in environments classified as explosive for the presence of Gas (G) zone 1/2 and/or Dust (D) zone 22.

- For motors that may be installed to the blower refer to the Atex complementary instructions of the motor manufacturer.
- In case the blower is disposed vertically, thus standing on the cover, foreign objects shall be prevented from falling into the ventilation openings. If necessary the motor can be provided of a fan cover with protecting canopy.
- If not specifically indicated, the ATEX label refers to the equipment “indoor” and “outdoor” area.
- In the case of a double indication separated by the “/” symbol, the first number indicates the “indoor” category (internal surface of the blower), the second number the “outdoor” category (outside of the blower, including the electric motor).
- The blower protection mode is constructive (“EX **c**”).
- Electric motors have different protection modes depending on the category and the environment they are designed for.
- All “2G” e “3/2G” configurations have explosion-proof motors (EX d protection).
- Classification of work zones:

1	Use of blower for conveying flammable gas	**Equipment with internal potentially explosive atmospheres, intended for use in areas that are not classified**	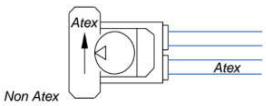
2	Use of blower for conveying non-hazardous fluids in ATEX classified environment	**Equipment with internal non-explosive atmospheres and intended for use in areas that are classified**	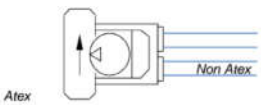
3	Use of blower with suction of ambient air and operating in a classified zone	**Equipment with internal explosive atmospheres, interfaced with process atmospheres and intended for use in areas that are classified**	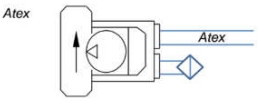

3.4 IMPROPER USE AND ASSOCIATED RISKS

WARNING **Non-compliance with the unit's intended use or with prohibitions/obligations can cause personal (also serious) injury (or death) or equipment damage.**

- Listed below are some improper uses, identified through risk assessment and experiences. Improper uses are subdivided according to the conditions that they may generate.
- The list is a non-exhaustive and representative example of improper use and associated risks.

IMPROPER USE	POSSIBLE CONSEQUENCES	RISKS
IMPROPER USE LINKED TO NORMAL OPERATION		
Absence of cyclic monitoring and control.	Anomalous operation not detected / hidden.	Risk of damage to the unit, with possible injury (or death) for the operator if present nearby.
Different installation with respect to manufacturer's suggestion.	Yielding / break of fastening points.	Risk of damage to the unit, with possible injury (or death) for the operator if present nearby. The unit may fall or be subject to damage due to incorrect load at support.
Operation outside the performance indicated on the blower and electric nameplate.	Seizure of the impeller.	Risk of damage to the unit, with possible injury (or death) for the operator if present nearby. The unit may break.
Proceeding at all stages without consulting the *operating instructions* and this manual.	Using the unit for unforeseen purposes and without considering the associated risk factors.	Risk of damage to the unit, with possible injury (or death) for the operator if present nearby.
IMPROPER USE LINKED TO METHODS OF USE		
Use of a fluid different from that indicated / forbidden.	Incorrect workload.	Risk of damage to the unit, with possible injury (or death) for the operator if present nearby. The unit may break.
Physical load applied to the machine (no element excluded).	Breakage and/or presence of leakage of fluid collected.	Risk of damage to the unit, with possible injury (or death) for the operator if present nearby due to inhalation of harmful substances.
IMPROPER USE LINKED TO THE STOPPAGE OF A BLOWER		
Manipulation of the machine still rotating / moving.	Direct contact of the operator with moving parts and with the surface unit still hot.	Risk of possible injury for the operator such as burns and entanglement.
Disconnecting the unit from the electricity with the voltage inserted.	Direct contact of the operator with the live parts.	Risk of possible injuries for the operator through electrocution.
IMPROPER USE LINKED TO MAINTENANCE WORK		
Handling the machine differently from instructions for use.	Falling or sudden movement of the unit.	Risk of damage to the unit, with possible injury for the operator if present nearby.
Use of liquid during unit cleaning operations.	In case of stagnation, characteristics of the material may be compromised.	Risk of damage to the unit, with possible injury for the operator if present nearby.
Use of types of spare parts different to those supplied by FPZ.	Different performance from design (pressure, noise, vibration, sealing).	Risk of damage to the unit, with possible injury for the operator if present nearby.
BREAKDOWN AND EMERGENCY CONDITIONS		
Not stopping the machine when it is making an unusual noise.	Seizure of the impeller and overheating of the unit and of the electric motor.	Risk of damage for the unit, with possible injury (or death) for the operator if present nearby. The unit may break down.

4 STORAGE AND TRANSPORT

4.1 RECEIPT AND CHECK OF THE PACKAGE

- When receiving the unit, it is necessary to check that the packaging is intact and free from signs of damage due to transport or storage conditions.
- In the case of damage to the packaging, immediately inform the shipping agent and the manufacturer.

4.2 HANDLING AND TRANSPORT



Danger of crushing and / or impacting various parts of the body

During the transport and handling phases due to the sudden drop or displacement of the packaging, there may be a risk of crushing and / or impacting various parts of the body. During the activities around the unit, the operator may fall due to stumbling or slipping.
Use equipment compliant with the laws and follow the handling and manual handling procedures described in the operating manual, based on the weight indications on the packaging and in accordance with applicable regulations in the state in which this activity takes place. Use safety shoes during this phase.

4.3 STORAGE

- Store in a dry place, possibly keeping the machine in the packaging.
- Do not remove the protective covers of the openings.
- In the event of long-term storage, remove dust deposits on external surfaces and, before commissioning, check the unit's functional status with a start-up test.

5 INSTALLATION

5.1 INSTALLATION CONDITIONS



Commissioning and operation must only take place under the following installation conditions:

- The unit must be completely assembled and intact (not damaged or tampered).
- Silencers must be connected to the pipe system (see *operating instructions*); if silencers are not present, make sure that the connection is made by flexible sleeve.
- The machine must be securely fastened to the predetermined site and in the recommended modes (see *operating instructions*).
- The motor must be connected to a suitable control panel.
- Ensure the visibility of the unit installed from the position of the control elements.



Danger of ejection of objects

The entry of foreign bodies into the unit, even if very small, can cause personal serious injury (or death) and/or equipment damage with probable breakage of the impeller blades, including the danger of debris can be thrown out of the machine violently.
Remove the closure caps from the silencers and connect the pipes of the system, making sure to carry out the operation in a non-dusty area to prevent the entry of foreign bodies.



Danger of crushing and / or impacting various parts of the body

During the installation phase due to the sudden drop or displacement of the packaging, there may be a risk of crushing and / or impacting various parts of the body. During work around the unit, the operator may fall due to stumbling or slipping. Use the appropriate device (e.g. toe) to hook and lift the unit properly.



Danger of injury to upper limbs

The risk of injury to upper limbs may arise due to a combination of hazards during the mechanical assembly phase and the connection of the machine to the piping. Observe the operating manual to install the unit safely.

- The support surface of the unit must be flat, robust, stable and absolutely levelled.
- It is important that the unit is installed on supports that do not transmit vibration for example structures or antivibration

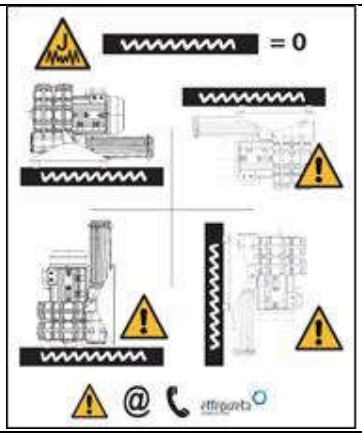

- Connect the pipes with flexible sleeves and avoid the unit bears pipes weight; except for the filter in the case of suction in the environment.

Size the pipes and choose accessories that minimize the load losses, therefore:

- do not fit pipes with diameters smaller than those of the machine's outlets and inlets;
- install multiple machines in parallel, sizing the manifold and main line proportionally;
- do not use angle-pipe, but bends with a large radius of curvature;
- do not install valves with passages smaller than the nominal value and check valves with a stopper pushed by a spring (the check valve with the lowest load loss is the type with a light disc);
- in the case of use for oxygenation, choose low-resistance diffusers (low load loss).

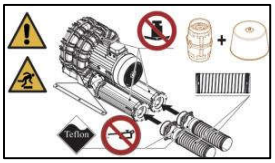

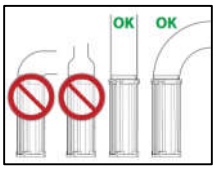

⚠WARNING	To avoid overloads caused by pressure variations, it's recommended that you install a relief valve on aspiration in the case of operation as suction, and on discharge in the case of operation as a compressor.
⚠WARNING	If you need to reduce the flow rate, use a branch valve instead of throttling the suction or discharge.
⚠WARNING	Protect the intake duct with a suitable filter with a filtration degree of 25 µm. Foreign bodies are: dust, sand, calcite, impurities in the pipes, cutting blades and shavings, drops and waste from welding, metal burrs, and residues of sealants produced during connection of pipes. Replace the filters regularly.







- When installing outdoors, protect the unit against direct exposure to the sun and atmospheric agents. For outdoor installations without the use of protections contact FPZ S.p.A..
- Ventilation of the motor must not be hampered by obstacles placed in the immediate vicinity. For this purpose, the electric motor air intake must remain free and a minimum distance between the electric motor fan cover and any other structure as defined by the manufacturer of electric motor.
- The unit must be installed at a maximum height of 1000 m a.s.l., for different conditions contact FPZ S.p.A..

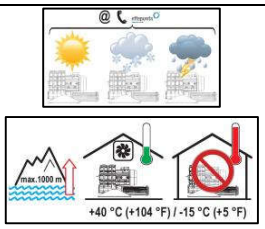

The ambient temperature, and the conveyed gas intake temperature, is permissible inside the range -15°C (+5°F) ÷ +40°C (+104°F) with the following provisions:

- For ambient temperature +30°C (+86°F) **reduce** the maximum pressure differential given in the Data Sheet by 5%;
- For ambient temperature +40°C (+104°F) **reduce** the maximum pressure differential given in the Data Sheet 10%.

The graph on the right has to be used to reduce the maximum pressure differential in case of ambient temperature between +21°C and +40°C (+70°F and +104°F)

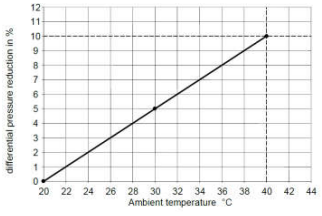

- Check dimensions to allow adequate space for installing the unit with its accessories and ensure sufficient ventilation of the electric motor.

⚠WARNING	In the case of ATEX side channel blower intended for classified areas, the unit must be installed outdoors or in an air conditioned environment.

5.2 BLOWER WITHOUT ELECTRIC MOTOR (GOR – GVR EXECUTION)

NOTICE

Units supplied without an electric motor, GOR execution (with horizontal coupling) or GVR (with vertical coupling) are considered as partly completed machinery, so the designer has to check the compatibility of the electric motor chosen with the data in the data sheets downloadable from the website.
During installation and maintenance, to install or dismantle the elastomeric coupling; it is recommended not to use a hammer, but pushers or extractors, to fit or remove the coupling flanges from the shaft. . Percussion can damage the slope of the bearings by reducing their durability. Coupling requires axial and angular alignment accuracy. Also refer to the coupling instruction manual.

5.3 ATEX 2G BLOWER (EXCLUDED TMD VERSION)

The blower is arranged for the installation of measurement/control systems in order to prevent machine faults that can produce potential sources of triggering:

- pressure sensor
- temperature sensor.



Danger of explosion. The unit is designed to convey flammable gas and is sealed. Do not start the machine before connecting and activating the unit and surveillance system

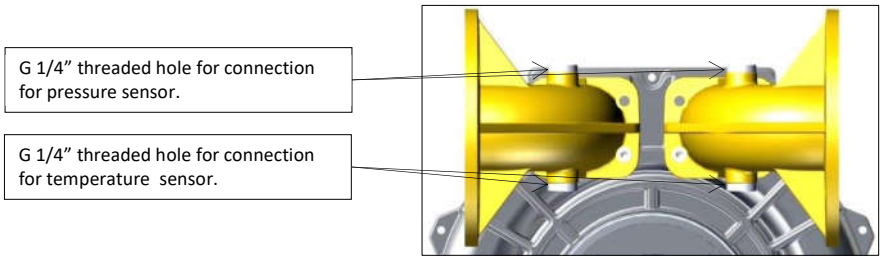

Pressure sensor



ALWAYS use a pressure sensor

Given the likelihood of an explosive atmosphere, the use of pressure measuring instruments is compulsory in order to check that the difference between the delivery and suction pressures respects the levels given in the "specifications" and on the machine's rating plate.

NOTICE

The use of an alarm and stop device (non-automatic reset) that automatically shuts off the power to the machine is advisable.

Temperature sensor

A possible temperature sensor is deemed functional for the customer's measurement needs, but can in any way replace the pressure sensor for monitoring any dangerous machine conditions.

WARNING

All the sensors must be protected against possible impacts, damage and atmospheric agents.

5.4 GOR TMD ATEX 2G BLOWER

The blower is designed for the installation of control systems which must be set up by the installer for the purpose of monitoring machine breakdowns which could produce possible sources of combustion:

- vibration sensor;
- pressure switch / vacuum switch;
- thermostat.

The mechanical seal installed also requires the following operations:

- refilling of the oil tray, as indicated below;
- connection of the oil level sensor.

If necessary, in order to avoid overloads caused by pressure variations, provide a vent device in conformity with EN 1127-1 branching off from the suction pipe, in the case of operation as a suction pump, and on the delivery pipe, in the case of operation as a compressor.

5.4.1 INSTALLATION OF SENSOR GOR TMD ATEX 2G BLOWERS

Install the machine on the plant. Fit the sensors (suitable for the purpose and especially for the Atex environment in question) in their places and connect them to the control system as specified in the instructions provided with the sensors and as required in the plant diagram:

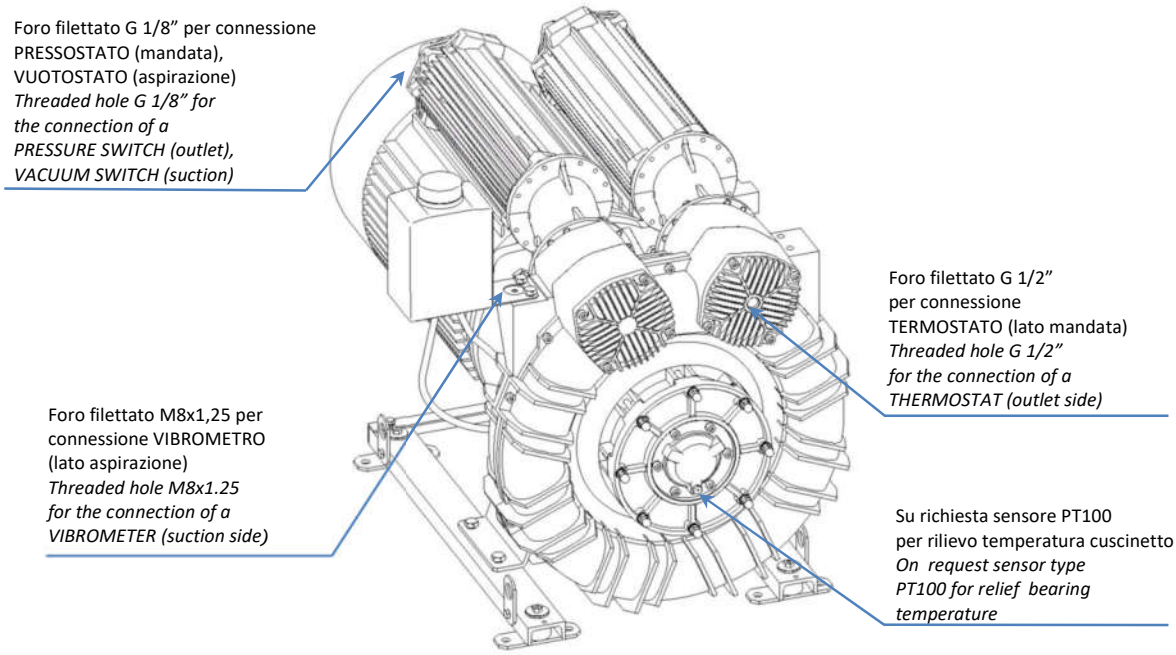

- Vibration sensor

The signal from the sensor must monitor the vibrations of the machine constantly. This signal must be connected to an alarm and block device with manual reset, which automatically interrupts the power supply to the compressor/suction pump at the moment the level of the vibration signal exceeds the predetermined limits.

Effective vibration velocity value [mm/s]	***Class I*** (≤ 15kW)
a<**2.2**	***A***

Effective vibration velocity value [mm/s]	***Class II*** (> 15kW)
a<**3.5**	***A***

- Pressure switch and vacuum switch

The pressure or vacuum switch installed must be calibrated to the maximum pressure or vacuum level specified on the plate of the machine or in accordance with the operating limits of the plant.
The signal must be connected to an alarm and block device, with manual reset, that automatically interrupts the power supply to the machine.

- Thermostat

The thermostat must be set to come on at a temperature not exceeding 125°C to interrupt the power supply to the machine automatically.
The signal must be connected to an alarm and block device, with manual reset, that automatically interrupts the power supply to the machine.

⚠WARNING **All sensors installed must be protected against impact, damage and weathering**. FPZ can supply a protective casing, on request and after receiving the dimensions of the sensors installed.

5.4.2 CONNECTION OF THE MECHANICAL SEAL FOR GOR TMD ATEX 2G BLOWER

	**Danger of slipping**
Oil spills can make the floor slippery. Clean the floor with absorbent and /or degreasing products.	

	**Danger of electrostatic charges**
Do not clean or rub the oil reservoir with dry clothes.	

- Refilling the cooling oil tray

Refill the cooling circuit of the mechanical seal. For good circulation of the cooling liquid, it is important not to have air bubbles inside the circuit. To achieve this, refill by pouring the liquid into the vessel repeatedly in small amounts without exceeding level (B) of the return line. Top up completely only when the level at the return line has covered the bottom of the vessel.

The cooling liquid must be kept at least 10 mm above the level of the return line (B); top up as necessary.

Recommended cooling liquid:	SAE 10W-40 oil Or SAE 5W-40 oil
First filling quantity:	Approx. 1,5 kg

A small leak of fluxing liquid is normal, especially when the seals are settling down.

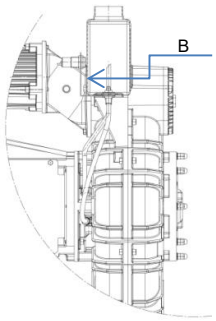

- Connection of the cooling oil level sensor

The capacitive oil level sensor consists of a stainless steel cylindrical body and is suitable for use in explosion risk zones. It is fitted with a potentiometer to regulate sensitivity and a LED display on the back end, which is normally on.

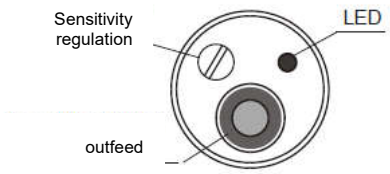

This sensor must be connected to an alarm and block system with manual reset which automatically interrupts the power supply to the machine. Connect the sensor to the control system following the specific instructions enclosed with this manual.

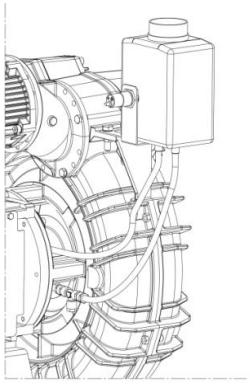

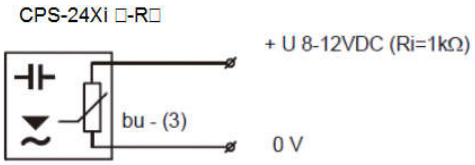

Note: the connection cable must not be cut or tampered with.

5.5 ELECTRIC MOTOR

WARNING	**Comply with safety measures and instructions indicated in the instruction manual for the electric motor.**

Before starting working on the unit or system, the following precautions must be taken:

- make sure that the unit is NOT connected to electrical power mains;
- take precautions to prevent electricity from being reconnected;
- open the terminal box only after making sure that there is absolutely no live current.

	Danger due to electricity

- If connecting operations are carried out without removing the voltage from the electrical system or without setting up a system to avoid reinsertion, direct contact between the operator and the live parts can occur. This can also cause personal serious injury (or death).
- Work on electrical equipment (installation and maintenance) has to be done only by specialized operators (see document MAN_PIC), wearing PPE.
- In the event of contact with a defective unit there is a risk of electrocution. Always have seals and electrics checked regularly by a specialized operator (see document MAN_PIC).
  - The terminal box must not contain foreign bodies, impurities or humidity. Close the terminal box with the cover, and seal the cable gland openings to prevent dust, water and humidity from getting inside.

NOTICE	In the case of several motor starts during an hour, there is a limitation of 6 start-ups per hour, evenly distributed; failure to respect this can severely damage the unit.

5.5.1 ELECTRIC CONNECTION

Incorrect motor connection may seriously damage the unit.

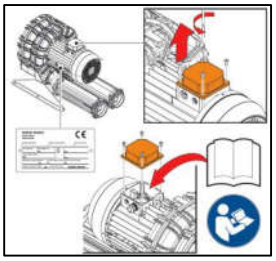

- Check that the details on the data plate are compatible with the line voltage and frequency.
- Always connect the motor's earth cable to the relevant terminal marked with this symbol before connecting to the mains supply and check the dispersion capacity. The earth cable can be recognized by its color (yellow/green).
- Connect the machine to the earth system too, using the specific hole (marked with the relative symbol) located on the base of the unit. Connection to the power grid must be carried out in compliance with what is shown in the diagram inside the terminal box.
- Use the cable gland openings to allow power supply cables to pass into the terminal box.
- Proceed to tighten the power supply cables, taking the section of the electrical cables into account each time.
- The terminal boards for the electrical connections must be tightened properly to avoid high contact resistances and resulting overheating.
- Check that the insulation gaps between the various conductors are kept in the air and between surfaces, as indicated in the standards.
- All the screws used to close the terminal board must be tightened properly. Damaged screws must be replaced immediately, using screws of the same or better quality.

The connection must guarantee:

- long-lasting safety;
- that no wire ends are sticking out;
- protection with a (thermal or amperometric) trip switch is essential for dealing with risks of overloading, a loss of one phase in the mains supply, excessive voltage fluctuations, or the rotor getting stuck;
- that the motor trip switch has been set to a value that does not exceed the maximum current level shown on the nameplate. Warning: the trip switch does not always protect the blower in case the maximum pressure differential is exceeded. Verify the maximum pressure or vacuum as per chapter 6.2.
- motors may be equipped with thermal protectors PTO or PTC. To avoid that the motor is damaged by temperature rise over the admissible limit: PTO or PTC have to be connected to a suitable cut off device that opens the line that feed the motor itself.
- if the application requires protection against accidental start-up, this must be carried out on the electrical control circuit of the motor.

5.5.2 ELECTRIC MOTOR POWERED BY FREQUENCY CONVERTER

The unit's nominal pressure or vacuum characteristics for service at mains frequency cannot be maintained if the unit is powered via a frequency converter. Contact FPZ S.p.A. for information about the performance of a unit powered by a frequency converter. Download from the website www.fpz.com the "RPM Table" of your blower and do not exceed the maximum pressure differentials shown for every rotation speed.

When power is supplied with a frequency converter, the installer is responsible for:

- respecting the laws;
- checking with FPZ assistance if the motor can be powered by a frequency converter, if it doesn't appear on data sheet;
- checking and making any measures necessary to comply with the immunity and emission limits set by the standards;
- checking the suitability of the plant and the frequency converter for operation with standard motors (class F), or the need to use specific motors for these types of operation.

5.5.3 ROTATION DIRECTION

The machines must be used respecting the rotation direction indicated by the arrow on the electric motor fan cover.

- To check the rotation direction, switch the motor on briefly and observe the fan.
- To change the rotation direction, invert the power cable connections, leaving the earth connection unchanged.

Refer to the connection diagram located inside the terminal box and to this section.

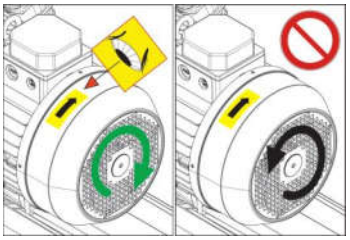

6 START UP AND NORMAL OPERATION

6.1 PRELIMINARY CHECKS

WARNING! Before starting the machine for use, carry out the following preliminary checks:

- if the unit has not been started up for some time, check its condition and, if necessary, remove any dust from the external surfaces, to avoid compromising the heat dissipation during the unit work;
- deactivate/open any pipe closing devices (shut-off valves, solenoid valves, etc.) before starting the unit;
- never start and operate the unit with the inlet and/or outlet ports closed;
- make sure the ambient and conveyed gas suction temperatures come within the levels: -15°C (+5 °F)÷ +40°C (+104 °F);
- check the operation of any flow control/limiting devices (not supplied).

6.2 OPERATION

- If the side channel blower is put into operation without being fixed to a surface, a sudden displacement of the starting torque on ignition of the electric motor may occur.
- The information on the product nameplate must always be considered when commissioning and operating.

The unit can be started for use after carrying out the preliminary checks

- Start the unit by switching on the power to the electric motor.
- Respect the maximum pressure differential stated in the blower's nameplate.
  To evaluate the pressure differential Δp across the blower take into account:
  - For compression operating: add up to the outlet pressure the inlet vacuum if applied.
  - For vacuum operation: add up to the inlet vacuum the outlet pressure if applied.
- Pressure losses in the pipes are often underestimated but are decisive factors for the operating differential pressure.
- Measure the motor absorption and check compliance with the rated nameplate value. An amperage below nameplate does not always guarantee that the blower is not exceeding the maximum permitted pressure differential.

WARNING	**Non-compliance with the unit's use or with prohibitions/obligations can cause personal (also serious) injury (or death) or equipment damage**

	Danger of burns

Danger of burns caused by contact with hot surfaces of the unit, which at start-up and operation may reach high surface temperatures, as specified on the product nameplate.
Apply adequate PPE against the risk of burns.



Danger of suction

Danger of injury due to depression, which can cause a sudden suction of objects, hair and clothes.
Start the machine only if it is properly connected to the system.



Danger of vibration

Regularly check that the unit is firmly fixed to the support frame.
Excessive vibration of the unit can cause serious damage to the machine, such as the seizure of the impeller.



Danger due to noise

Some machines can produce loud noise, even over 80 dB (A).
Reference levels are shown on the table of characteristic data that does not consider environmental reverb.
Warning to be taken:
Measure the acoustic pressure of the machine in the installation environment.
In the case of levels above the threshold defined by local standards:

- report the noise hazard
- prepare the use of PPE
- isolate the environment



Danger of ejection of objects

- Danger due to exceeding performance levels that may cause seizure of the impeller.
  Check that operating conditions are in accordance with values declared on the nameplate.
  Avoid operating with the inlet and/or outlet ports closed even temporarily.
  Install a limit valve or equivalent circuit that can avoid excessive vacuum and / or overpressure and allow the compliance with levels shown on the product plate
- Danger of injury due to objects and fluids aspirated and thrown at high speed (injury to the skin or eyes).
  Only start the unit (first start) if it is properly connected and check it accurately.
  In the case of unusual noise from the impeller, switch off the unit immediately and check it accurately.



Danger of injury to upper limbs

During the start-up (first start) phase due to a combination of hazards, the risk of injury to upper limbs may arise.



Danger of sudden leakage and/or aspiration of fluids (even harmful ones)

They could cause damage to the respiratory system due to the leakage of gas while the unit is in use and/or the slowing down of connection to the gas flow circuit.



Danger due to a limited view of the place in which the unit is installed.

Make sure you always have the unit installed in your sight while carrying out any activities close to it.

6.3 STOPPING

- The unit must be stopped by switching off the power supply to the motor.
- On shutdown, make sure to operate the unit with open outlet (suction / delivery) for about 20 minutes. This operation allows the removal of any condensation inside.

7 MAINTENANCE

In order to prevent faults and damage it is important to check periodically the units in operation; therefore it is advisable to adopt a maintenance plan in line with this manual, providing for:

- periodical checks;
- periodical maintenance.

7.1 MAINTENANCE AND FAILURE CONDITIONS

WARNING **Before starting any maintenance, either periodical or due to malfunction, take the following safety measures in order to prevent personal (also serious) injury (or death) or equipment damage:**

- unplug the unit from the power supply by unplugging the main switch;
- apply a sign to the system and to the control unit **"DANGER! Maintenance work in progress";**
- cool the unit for at least 15 minutes;



- wait until the unit has completely stopped, checking through the motor fan that the impeller is not rotating;

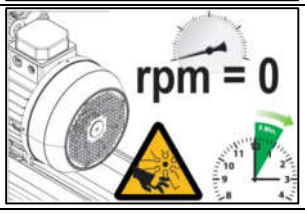

- make sure that there is no depression or overpressure in the unit through a pressure gauge and make sure that no fluid can escape from the unit (through its stopping) and / or the system (through its insulation).

Danger due to electricity

- If connecting operations are carried out without removing the voltage from the electrical system or without setting up a system to avoid reinsertion, a direct contact of the operator with live parts can occur. This can also cause personal serious injury (or death).
- Work on electrical equipment (installation and maintenance) must be done only by specialized operators (see document MAN_PIC), wearing PPE.
- In the event of contact with a defective unit there is a risk of electrocution.

Danger of moving parts

High risk of cuts caused by rotating impellers. By removing the manifolds or blind flanges, it is possible to access the rotating impeller through the openings of the body and the cover of the side channel blower.
Never put your hands or objects through the openings.

Danger of burns

Danger of burns caused by contact with hot surfaces of the unit, which at startup and in operation may reach high surface temperatures, as specified on the product nameplate.
Apply adequate PPE against the risk of burns.

Danger of injury to upper limbs

During the maintenance phase due to use of improper tools, lack of PPE, bad illumination of the workplace or unauthorized start-up, the operator fails to perform the required procedures, the machine can be put into unmanaged operation, and the risk of injury to upper limbs may arise.

Danger due to noise

Some machines can produce loud noise, even over 80 dB (A) therefore the operator may be subject to acoustic pressure which may cause buzzing in the headset and reduced attention.

WARNING **Danger of sudden spillage of gas (also harmful) suction**

Respiratory damage could occur due to gas leakage during operation and / or loosening of the connections to the gas flow circuits.

7.2 PERIODICAL CHECKS

In order to avoid any defects that may directly or indirectly cause damage, it is important that the unit is inspected by specialized operators (see document MAN_PIC).

A) When the unit is running, routinely carry out the following checks:

- delivery temperature;
- operating pressure and/or vacuum;
- electric motor current absorption;
- vibrations;
- state of the filter and related load loss.

WARNING	**Danger of seizure of the impeller due to excess vibration. Vibrations above the threshold (see table below) are considered NOT eligible and can cause damage to the machine and consequently personal injury even serious (or death) and / or damage to things.** **In the event of unusual noise and / or vibration over parameters, that may indicate the possibility the impeller is seizing up, turn off the unit immediately.**

Class I (Blower with electric motor of power ≤15kW)	Class II (Blower with electric motor of power >15kW)
a > 2,2	a > 3,5
a = effective vibration speed level [mm/s]	

Changes to normal working conditions (power ups, abnormal noise, vibrations, excessive overheating of the service fluid) are indications that the units is not working properly.

B) With the unit stopped and cooled, periodically carry out the following checks:

- dust: check and remove deposits from the external surfaces of the unit;
- suction filter (if fitted): every 10-15 days, check and clean or replace the filter cartridge. The dirty cartridge creates strong suction resistance and consequently a higher pressure differential, power absorption and operating temperature;
- for unit supplied with elastic joint, check the condition of the elastic joint as indicated in its operating manual;
- condensation discharge (if present): every 8-10 days, turn the yellow valve counterclockwise 90° to allow draining of the condensation that has built up inside the blower;
- check for oil leaks (TMD version) near the joint; if leaks are found, maintenance work must be scheduled to replace the seals.

7.3 ROUTINE MAINTENANCE REPAIR OF BREAKDOWNS

See the following chapter “TROUBLESHOOTING” for identifying possible critical situations and types of breakdowns.
Always disconnect the unit and remove it from the plant to do routine maintenance, cleaning and replacing components and in the event of a breakdown.

WARNING	**Danger due to residual overpressure or drop in pressure:**

- with residual overpressure, process fluids can leak, with the risk of injury to the skin and eyes;
- with a drop in pressure there is the risk that hair and clothes can be trapped;
- disconnect the unit only after closing and bleeding the system connected to it.

7.4 LIFESPAN OF BEARINGS

Under normal operating conditions, the bearings of the unit must be replaced by a specialized operator (see document MAN_PIC), after a time fixed by the manufacturer (see details in the table below).

NOT ATEX BLOWERS

Every model, except the models at the following line	25000 hours or 3 years
e07 / e08 / e09 / e10 / e11 MS – TS – TD	40000 hours or 5 years

SOFFIANTI ATEX

Every Atex model	18000 hours or 3 years

NOTICE Replace the bearings of the unit only if you have all the instructions, the parts list and the section/explosion of the unit

7.5 DISMANTLING AND DEMOLITION



Danger of crushing and / or impacting various parts of the body

During the dismantling and demolition phases due to the sudden drop or displacement of the packaging, there may be a risk of crushing and / or impacting various parts of the body. During work around the unit, the operator may fall due to stumbling or slipping.

8 RESIDUAL RISKS

During the design of the machines or system on which the blower will be installed, the following residual risks should be considered.



Danger during the transport phase

Danger of crushing or slipping during the unit transport steps. The *operating instructions* (attached to the unit) and this manual describe how to carry out safe transport operations according to tested procedures.



Danger during the installation phase

Danger of crushing or slipping during the installation phases of the unit. The *operating instructions* (attached to the unit) and this manual describes how to carry out safe installation operations and according to tested procedures.



Danger during the start-up and operating phase

Danger of electrocution, burns, noise, unauthorized start-up of the unit, and ejection of objects or fluids during the start-up and operation phases of the unit. The *operating instructions* (attached to the unit) and this manual describe how to perform the operations mentioned safely and according to tested procedures.



Danger during maintenance and dismantling phases

Danger of electrocution, burns, noise, unauthorized start-up of the unit, and ejection of objects or fluids during the maintenance and dismantling phases of the unit. The *operating instructions* (attached to the unit) and this manual describe how to perform the operations mentioned safely and according to tested procedures.

9 TROUBLESHOOTING

Problem	Serious code	Cause	Solution	Precaution
The unit does not start	F	Electrical wiring incorrect	The electrical connection has to be checked by a technician referring to the wiring diagram contained in the terminal board box	Turn off the power to the electrical system or set up a system that avoids reinsertion
	F	Power supply voltage unsuitable	Check that the power supply voltage, measured at the motor terminals, is within +/- 10% of the rated voltage	Use PPE against the electrical hazards
	G	The impeller is stuck	Call FPZ assistance to repair the unit	
No or insufficient air flow	G	The suction filter is clogged	A specialized operator (see MAN_PIC) has to clean or replace the cartridge	Avoid entering foreign bodies into the unit
	G	Wrong frequency (for units powered through an inverter)	Correct the frequency	Check the rating plate
	G	Profile of the impeller blades modified (due to deposits on the profile)	Call FPZ assistance personnel to check the impeller	
No or insufficient pressure differential	F	Incorrect direction of rotation	The direction of rotation has to be inverted by a specialized operator (see MAN_PIC) switching two of the electrical power supply wires.	Turn off the power to the electrical system or set up a system that avoids reinsertion
	G	Leaks in the plant	Locate the leak and seal	Use proper sealants
Current absorption exceeding the admissible level	F	Electrical wiring incorrect	The electrical connection has to be checked by a technician referring to the wiring diagram contained in the terminal board box	Take off the power to the electrical system or set up a system that avoids reinsertion
	F	Drop in mains supply voltage	The power supply voltage has to be restored by a specialized operator (see MAN_PIC) at the terminals and at the established values.	
	G	The suction filter is clogged	The cartridge has to be cleaned or replaced by a specialized operator (see MAN_PIC)	Avoid entering foreign bodies into the unit.
	G	The unit has accumulated deposits inside	Call FPZ assistance personnel to clean the inside of the unit	Avoid entering foreign bodies into the unit.
	G	The unit is operating at a pressure and/or vacuum that exceeds the admissible level	Adjust the system and/or the regulating valve to lower pressure differentials.	Use appropriate PPE to operate near the unit
High delivery air temperature	G	The suction filter is clogged	Adjust the system and/or the regulating valve to lower pressure differentials.	Use appropriate PPE (surge protectors, gloves) to operate near the unit
	G	The suction filter is clogged	The cartridge has to be cleaned or replaced by a specialized operator (see MAN_PIC)	Avoid entering foreign bodies into the unit.
	G	The unit has accumulated deposits inside	The unit has to be cleaned inside by a specialized operator (see MAN_PIC).	Avoid entering foreign bodies into the unit.
	G	Suction and/or delivery piping obstructed.	Obstructions have to be removed by a specialized operator (see MAN_PIC).	Avoid entering foreign bodies into the unit.
	G	Suction air temperature exceeds 40°C (+104°F)	Use heat exchangers to reduce the suction air temperature	
Abnormal noise	F	The soundproofing material is damaged	Soundproofing cloth has to be replaced by a technician.	Avoid entering foreign bodies into the unit.
	G	The impeller scrapes against the casing. - The unit is operating at a pressure and/or vacuum that exceeds the admissible level	Reduce the pressure differentials in the plant	Use appropriate PPE (surge protectors, gloves) to operate near the unit
	G	- Reduction of assembly tolerances due to internal deposits (dust, impurities in the pipes, process residues, etc.)	The unit has to be cleaned inside by a specialized operator (see MAN_PIC).	Avoid entering foreign bodies into the unit.
	G	Worn bearing	Bearings have to be replaced by a specialized operator (see MAN_PIC).	
	F	Unit's installation position unsuitable	The unit has to be installed by a technician on structures that cannot transmit or amplify noise (tanks, steel plating, etc.)	Use proper anti-vibration and move the units according to local regulations

Abnormal vibrations	G	The impeller is damaged	The impeller has to be replaced by a specialized operator (see MAN_PIC).	
	G	The impeller has accumulated deposits	The unit has to be cleaned inside by a specialized operator (see MAN_PIC).	Avoid entering foreign bodies into the unit
	G	Unit anchored without anti-vibration insulators	The unit has to be anchored with anti-vibration insulators by specialized operator (see MAN_PIC).	Use proper anti-vibration and move the units according to local regulations
	F	Rigid connection to the plant	Flexible hoses between the unit and the piping have to be fitted by a specialized operator (see MAN_PIC).	Carry out the activity only if the unit is disconnected to the power supply.
	G	Bearing on the blower or motor side defective	Bearings have to be replaced by a specialized operator (see MAN_PIC).	

Leaks	G	Defective silencer gaskets	Gaskets have to be checked by a specialized operator (see MAN_PIC), and if necessary have to be replaced.	Avoid entering foreign bodies into the unit.
	G	Defective casing gaskets	Gaskets have to be cleaned by a specialized operator (see MAN_PIC), and if necessary have to be replaced.	Avoid entering foreign bodies into the unit.

Seriousness: F for functional fault and G for serious fault.

10 REFERENCES

Documents quoted:

- Operating Instruction: supplied with the blower
- MAN_PIC: document with pictogram definitions
- Instruction manual of elastic joint
- Instruction manual of electric motor

Norme e direttive:

- Machinery directive 2006/42/EC
- Atex directive 2014/34/EU (Applies to Atex blowers only)
- EN ISO 12100: 2010
- EN 349:1993+A1: 2008
- EN 614-1: 2006+A1: 2009
- EN ISO 3746: 2010
- EN ISO 13857: 2008
- EN 60204-1: 2006
- EN 1127-1: 2011 (Applies to Atex blowers only)
- EN ISO 80079-36: 2016 (Applies to Atex blowers only)
- EN ISO 80079-37: 2016 (Applies to Atex blowers only)
- EN 14986: 2017 (Applies to Atex blowers only)

11 INSTALLATION DIAGRAMS

SCHEMI DI INSALLAZIONE I
INSTALLATION DIAGRAM GB

COMPRESSORE PRESSURE SERVICE	ASPIRATORE VACUUM SERVICE
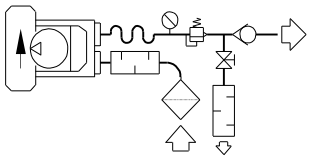	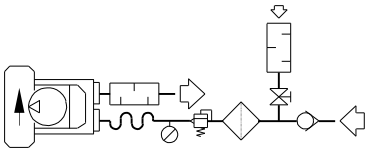
COMPRESSORE IN SERIE SERIAL PRESSURE SERVICE	ASPIRATORE IN PARALLELO PARALLEL VACUUM SERVICE
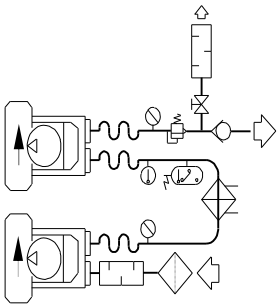	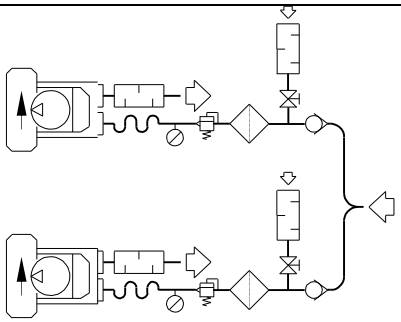
COMPRESSORE IN PARALLELO PARALLEL PRESSURE SERVICE	ATEX BLOWERS SCHEMA D'INSTALLAZIONE INSTALLATION DIAGRAM
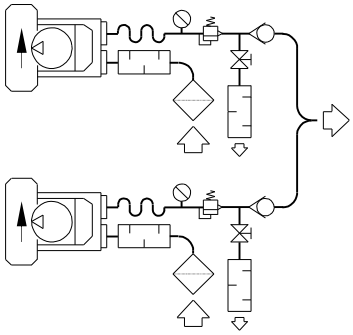	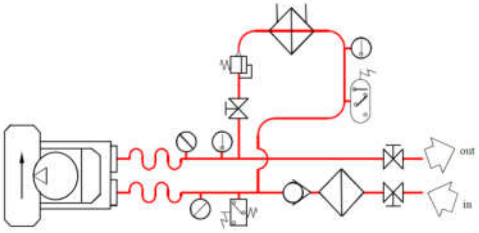

LEGENDA, KEY – ACCESSORIES

Item Item		Denominazione Name	Item Item		Denominazione Name
1		Filtro - Filtro in linea Filter - Inline filter	7		Valvola di ritegno Check valve
(2)		Silenziatore Silencer	8		Valvola Valve
3		Manicotto flessibile Flexible sleeve	(9)		Scambiatore Cooler
4		Manometro – Vuotometro Pressure gauge - Vacuum gauge	(10)		Termometro Thermometer
5		Pressostato – Vuotostato Pressure switch – Vacuum switch	(11)		Termostato Thermostat
6		Valvola limitatrice Pressure relief valve	(x) (x)		SE NECESSARIO IF NECESSARY

SN 1701-9

SAFETY VALVE VRL USE INSTRUCTIONS

CAUTION! THE VALVE IS SUPPLIED NOT CALIBRATED



PLEASE READ CAREFULLY ALL INSTRUCTIONS AND KEEP THEM FOR FUTURE REFERENCE

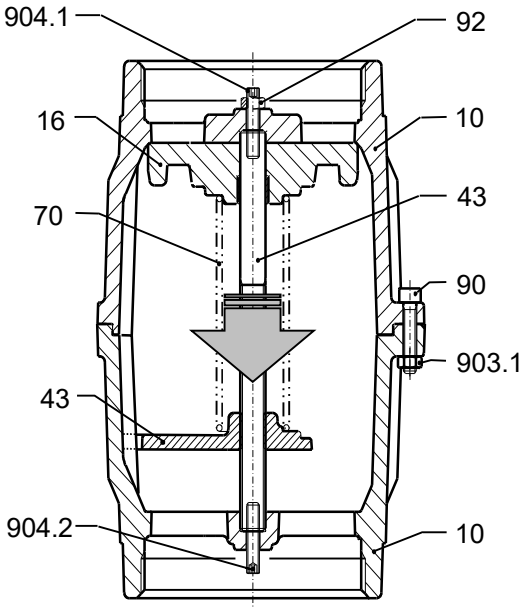

VRL6
Fig. 1a

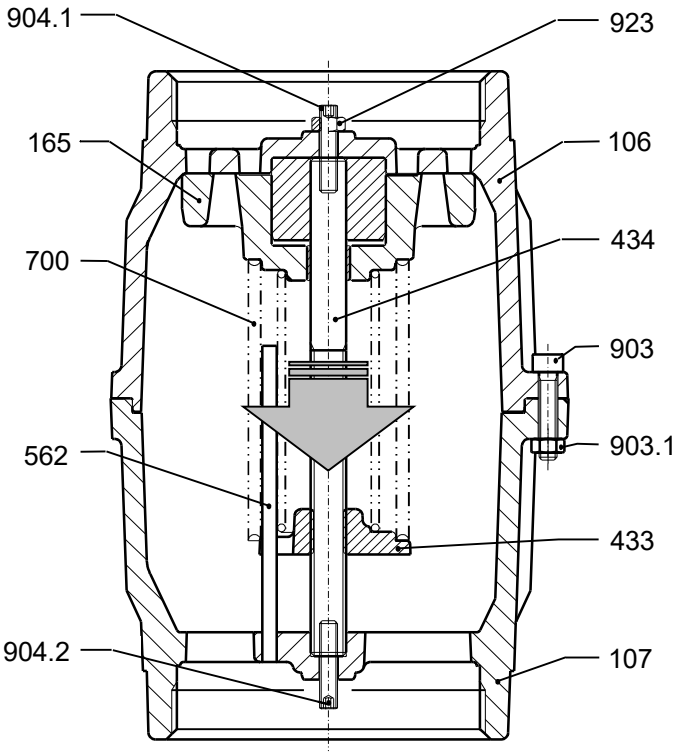

VRL8 - VRL9
Fig. 1b

Description

106	*Housing*	700	*Spring*
107	*Cover*	903	*Screw*
165	*Shutter*	903.1	*Nut*
433	*Spring guide disc*	904.1	*Upper grub screw*
434	*Shutter guide*	904.2	*Lower grub screw*
562	Dowel pin	923	*Nut*

GB CONDITIONS OF USE

- ***THE VRL VALVES ARE DESIGNED FOR THE HANDLING OF AIR OR NON-EXPLOSIVE, NON-HAZARDOUS AND NON-FLAMMABLE GASES IN NON-EXPLOSIVE ENVIRONMENTS. THE GAS INLET TEMPERATURE MUST BE IN THE RANGE OF -15 TO +160 °C.***
- ***RELIEF VALVES ARE DESIGNED AND MANUFACTURED TO LIMIT THE OPERATING PRESSURE IN LOW PRESSURE/VACUUM APPLICATIONS. THEY ARE FOR USE SPECIFICALLY ON LOW PRESSURE BLOWERS AND VACUUM PUMPS ONLY;***
- ***THE VALVE CANNOT WITHSTAND HIGH INTERNAL PRESSURE, DESIGN MAXIMUM OF 2.8 bar A;***
- ***THERE IS SMALL LOSS OF THE AIR/GAS BEING HA***
- ***SOLID PARTICULES, HOWEVER SMALL, INCLUDING DIRT CAN CAUSE SERIOUS DAMAGE; THEREFORE IT IS ESSENTIAL THAT SUCH SUBSTANCES SHOULD BE REMOVED FROM THE GAS BY SUITABLE FILTERS UPSTREAM OF THE INLET.***

SELECTION DIAGRAM

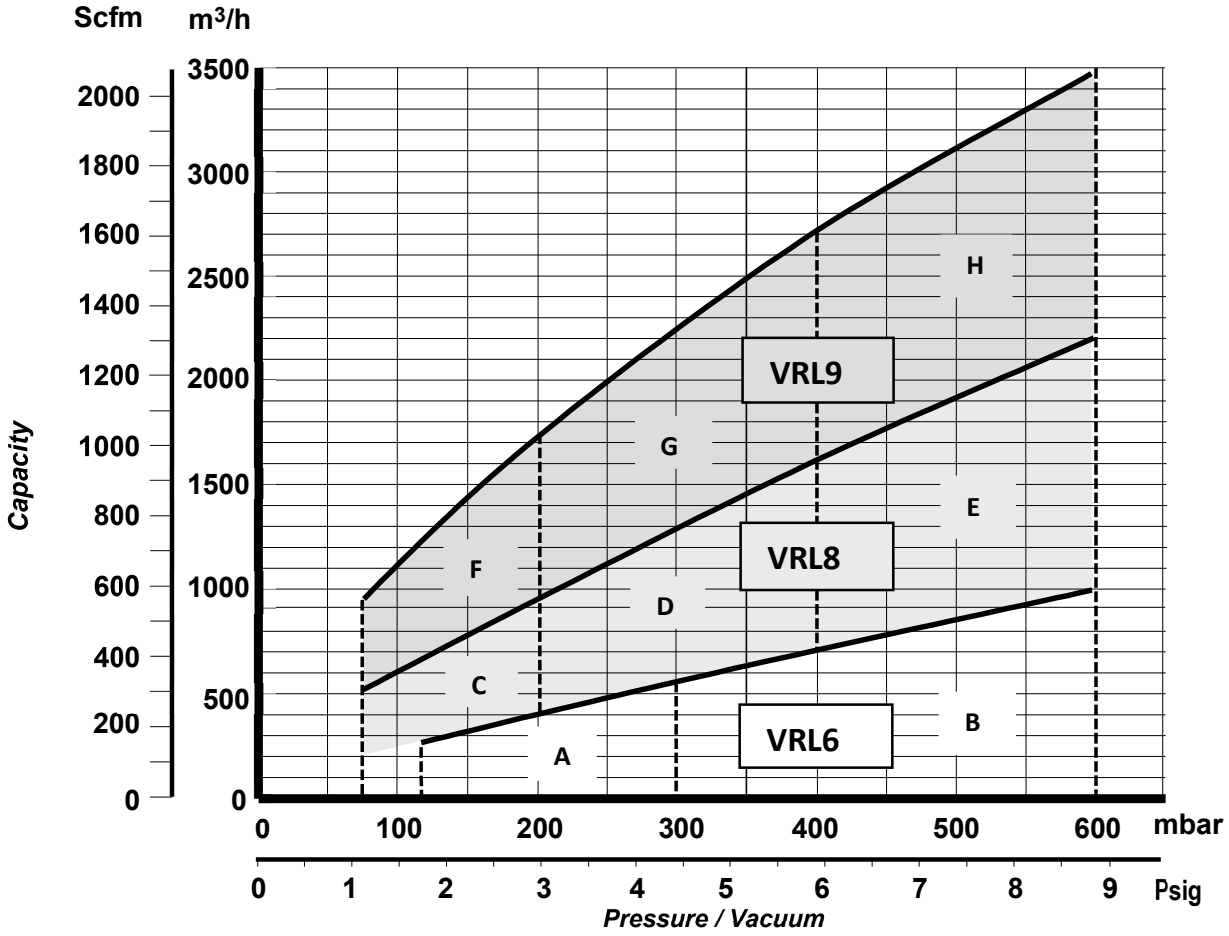

SPRING SELECTION CHART

RANGE	*SPRING* N	*Pressure / Vacuum* MIN [mbar]	[psig]	*Pressure / Vacuum* MAX [mbar]	[psig]	*Colour of identification*
VRL6						
A	I	**120**	**1.763**	**300**	**4.408**	***SILVER***
B	II	**300**	**4.408**	**600**	**8,820**	***GREEN***
VRL8						
C	I	**75**	**1.102**	**200**	**2.940**	***SILVER***
D	II	**200**	**2.940**	**400**	**5.880**	**GREEN**
E	I + II	**400**	**5.880**	**600**	**8,820**	***SILVER & GREEN***
VRL9						
F	I	**75**	**1.102**	**200**	**2.940**	**VERDE - GREEN - VERT - GRÜN - VERDE**
G	II	**200**	**2.940**	**400**	**5.880**	***SILVER***
H	I + II	**400**	**5.880**	**600**	**8,820**	***SILVER & GREEN***

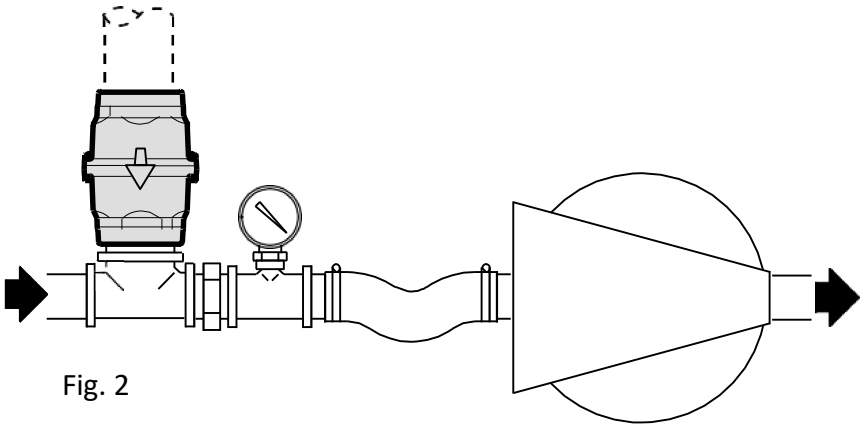

Fig. 2

INSTALLATION SKETCH – VACUUM RELIEF VALVE

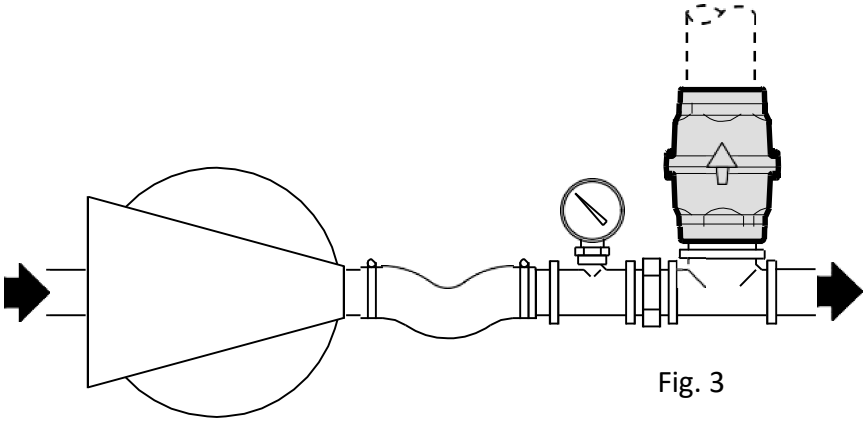

Fig. 3

INSTALLATION SKETCH – PRESSURE RELIEF VALVE

1. CHOICE OF SPRING

The valve is supplied with 2 different springs; each spring is to be used within a specific pressure-vacuum operating range. For the VRL8 and VRL9 there is the possibility to use both springs working in parallel.
Referring to the SELECTION DIAGRAM, check that the valve is correctly sized and depending where the operating point (area A, B,…H) is located, choose one or two springs according to SPRING SELECTION CHART.
The valve is supplied with spring # I installed. If spring needs to be replaced or a supplementary spring is needed to be added (for VRL8 / VRL9), proceed to point # 2 otherwise, adjust valve as per point #3.

2. INSTRUCTIONS FOR SPRING REPLACEMENT (OR MOUNTING ADITIONAL SPRING FOR VRL8 / VRL9)

- Remove the two plastic caps on valve.
- **Ensure stop-nut 923 is locked on the upper housing 106.**
- Unscrew screw 903 from nut 903.1.
- Remove cover 107 from housing 106.
- Unscrew spring guide disc 433 taking it out from shutter guide 434.
- Remove spring 700 (only in case of replacement).
- Install the appropriate spring into shutter 165.
- Compress spring and screw spring guide disc 433 on shutter guide 434 for at least 20 full thread terms
- Check that both ends of the spring are properly positioned within their seats.
- Install the cover 107 on the housing 106 inserting:
  - for VRL6: the sliding guide on the slot in spring guide disc 433
  - for VRL8 and VRL9: dowel pin 562 on the slot in spring guide disc 433.
- Tighten screw 903 on nut 903.1

3. VALVE SETTING

A) Setting-up at allowed vacuum level

- Remove the two plastic caps on valve, if any.
- Position valve on the suction by-pass and connect a vacuum gage as close as possible to the exhauster inlet (Fig. 2).
- Unscrew nut 923.
- Relieve spring tension by backing off upper grub screw 904.1 with the fit key.
- Turn on exhauster. Induce highest attainable vacuum by throttling air intake upstream relief valve (normally reducing throttle to fully-closed).
- Adjust upper grub screw 904.1 until maximum allowable vacuum level is reached.
- Tighten nut 923 keeping blocked upper grub screw 904.1.
- Open suction line.

Double-check vacuum gauge to ensure no additional losses are induced by pipes or filters installed upstream relief valve

B) Setting-up at allowed pressure level

- Remove the two plastic caps on valve, if any.
- Remove nut 923 from upper grub screw 904.1 and place it on to the lower grub screw 904.2. Do not tighten.
- Position valve on the discharge by-pass and connect a pressure gage as close as possible to the blower outlet (Fig. 3).
- Relieve spring tension by backing on lower grub screw 904.2 with the fit key.
- Turn on blower. Induce highest attainable pressure by throttling air discharge downstream of the valve (normally reducing throttle to fully-closed).
- Unscrew lower grub screw 904.2 until maximum allowable pressure level is reached.
- Tighten nut 923 keeping blocked lower grub screw 904.2.
- Open discharge line.

Double-check pressure gauge to ensure no additional losses are induced by pipes or filters installed downstream the valve

Section 3.3.6

DO Sensor

TWO-WIRE TRANSMITTERS FOR pH, ORP, CONDUCTIVITY, OXYGEN, OZONE, AND CHLORINE

5081 Family of Two-wire Transmitters

- CHOICE OF COMMUNICATION PROTOCOL: HART® or FOUNDATION Fieldbus.
- LARGE, EASY-TO-READ two-line display shows the process measurement and temperature.
- SIMPLE MENU STRUCTURE.
- ROBUST TYPE 4X ENCLOSURE.
- INTRINSICALLY SAFE DESIGN allows the transmitter to be used in hazardous environments (with appropriate safety barriers).
- NON-VOLATILE MEMORY retains program settings and calibration data during power failures.



FEATURES AND APPLICATIONS

The 5081 family of transmitters can be used to measure pH, ORP, conductivity (using either contacting or toroidal sensors), resistivity, oxygen (ppm and ppb level), free chlorine, total chlorine, and ozone in a variety of process liquids. The 5081 is compatible with most Rosemount Analytical sensors. See the Specification sections for details.

The transmitter has a rugged, weatherproof, corrosion-resistant enclosure

The transmitter has a two-line seven-segment display. The main measurement appears in 0.8-inch (20 mm) high numerals. The secondary measurement, temperature (and pH if free chlorine is being measured), appears in 0.3-inch (7 mm) high digits.

Two digital communication protocols are available: HART (model option -HT) and Foundation Fieldbus (model options -FF or -FI). Digital communications allows access to AMS (Asset Management Solutions). Use AMS to set up and configure the transmitter, read process variables, and troubleshoot problems from a personal computer or host anywhere in the plant.

A handheld infrared remote controller or the HART and Foundation Fieldbus 375 communicator can also be used for programming and calibrating the transmitter. The remote controller works from as far away as six feet.



5081-P pH/ORP Transmitter

- CHANGING FROM pH TO ORP operation takes only seconds.
- AUTOMATIC TWO-POINT BUFFER CALIBRATION reduces errors.
- SOLUTION TEMPERATURE COMPENSATION converts measured pH to the pH at 25°C.
- CONTINUOUS DIAGNOSTICS monitor sensor performance and warn the user of failure (FAULT) or approaching failure (WARNING).

5081-C Contacting Conductivity Transmitter



- MEASURES CONDUCTIVITY, RESISTIVITY, OR CUSTOM CURVE VARIABLE.
- AUTOMATIC TC RECOGNITION simplifies start up.
- AUTOMATIC/MANUAL TEMPERATURE COMPENSATION ensures accurate monitoring and control.
- AUTOMATIC COMPENSATION FOR SENSOR CABLE RESISTANCE improves accuracy of high conductivity/ low resistivity measurements.
- BUILT-IN TEMPERATURE COMPENSATION ALGORITHMS include straight slope, ultra-pure water, cation conductivity, and no compensation.



5081-T Toroidal Conductivity Transmitter

- MEASURES CONDUCTIVITY, PERCENT CONCENTRATION, OR CUSTOM CURVE VARIABLE.
- AUTOMATIC TC RECOGNITION simplifies start up.
- AUTOMATIC/MANUAL TEMPERATURE COMPENSATION ensures accurate monitoring and control.
- BUILT-IN CONCENTRATION CURVES FOR 0-12% NaOH, 0-15% HCl, 0-25% and 96-99.7% H_2SO_4.
- PROGRAMMABLE REFERENCE TEMPERATURE enables temperature compensation to temperatures other than 25 degrees Celsius.
- AUTOMATIC COMPENSATION FOR SENSOR CABLE RESISTANCE improves accuracy of high conductivity measurements.

5081-A Amperometric Transmitter



- MEASURES dissolved oxygen (ppm and ppb level), free chlorine, total chlorine, and ozone.
- SECOND INPUT FOR A pH SENSOR ALLOWS AUTOMATIC pH CORRECTION for free chlorine measurement. No expensive, messy reagents needed.
- AUTOMATIC BUFFER RECOGNITON FOR pH CALIBRATION.

SPECIFICATIONS - GENERAL

Housing: Cast aluminum with epoxy coating. Type 4X (IP65). Neoprene O-ring cover seals. 160.5 mm x 175.3 mm x 161.3 mm (6.3 in. x 6.9 in. x 6.4 in.)

Dimensions: See drawing.

Conduit Openings: ¾-in. NPT

Ambient Temperature: -4 to 149°F (-20 to 65°C)

Storage Temperature: -22 to 176°F (-30 to 80°C)

Relative Humidity: 0 to 95% (non-condensing)

Weight/Shipping Weight: 10 lb/11 lb (4.5/5.0 kg)

Display: Two-line LCD; first line shows process variable (pH, ORP, conductivity, % concentration, oxygen, ozone, or chlorine), second line shows process temperature and output current. For pH/chlorine combination, the second line can be toggled to show pH. Fault and warning messages, when triggered, alternate with temperature and output readings.

First line: 7 segment LCD, 0.8 in. (20 mm) high.

Second line: 7 segment LCD, 0.3 in. (7mm) high.

Display board can be rotated 90 degrees clockwise or counterclockwise.

During calibration and programming, messages and prompts appear in the second line.

Temperature resolution: 0.1°C

Hazardous Location Approval: For details, see specifications for the measurement of interest.

RFI/EMI: EN-61326 CE

Digital Communications: For details, see specifications for the measurement of interest.

Specifications subject to change without notice.

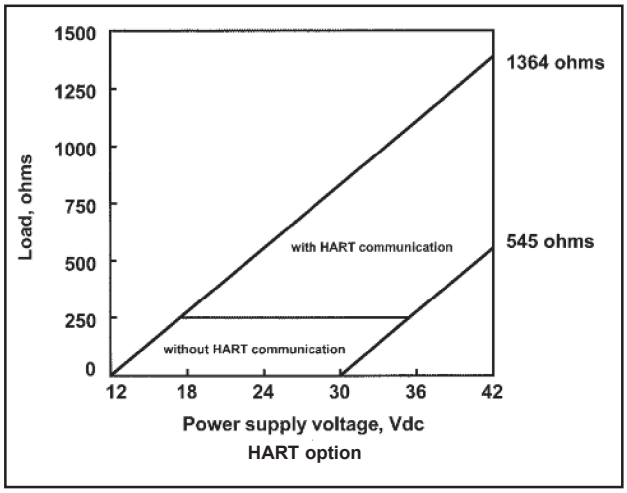

HART —
Power & Load Requirements:
Supply voltage at the transmitter terminals should be at least 12 Vdc. Power supply voltage should cover the voltage drop on the cable plus the external load resistor required for HART communications (250 Ω minimum). Minimum power supply voltage is 12 Vdc. Maximum power supply voltage is 42.4 Vdc (30 Vdc for intrinsically safe operation). The graph shows the supply voltage required to maintain 12 Vdc (upper line) and 30 Vdc (lower line) at the transmitter terminals when the current is 22 mA.

Analog Output: Two-wire, 4-20 mA output with superimposed HART digital signal. Fully scalable over the operating range of the sensor.

Output accuracy: ±0.05 mA

FOUNDATION fieldbus —

Power & Load Requirements: A power supply voltage of 9-32 Vdc at 22 mA is required.

Fieldbus **I**ntrinsically **S**afe **CO**ncept/FISCO-compliant versions of 5081 Foundation Fieldbus transmitter are available.

5081-A AMPEROMETRIC TRANSMITTER

FEATURES

The 5081-A Transmitter with the appropriate sensor measures dissolved oxygen (ppm and ppb level), free chlorine, total chlorine, and ozone in a variety of process liquids. The transmitter is compatible with Rosemount Analytical 499A amperometric sensors for oxygen, chlorine, and ozone; and with Hx438 and Gx448 steam-sterilizable oxygen sensors.

For free chlorine measurements, both automatic and manual pH correction are available. pH correction is necessary because amperometric chlorine sensors respond only to hypochlorous acid, not free chlorine, which is the sum of hypochlorous acid and hypochlorite ion. To measure free chlorine, most competing instruments require an acidified sample. Acid lowers the pH and converts hypochlorite ion to hypochlorous acid. The 5081-A eliminates the need for messy and expensive sample conditioning by measuring the sample pH and using it to correct the chlorine sensor signal. If the pH is relatively constant, a fixed pH correction can be used, and the pH measurement is not necessary. If the pH is greater than 7.0 and fluctuates more than about 0.2 units, continuous measurement of pH and automatic pH correction is necessary. See Specifications section for recommended pH sensors. Corrections are valid to pH 9.5.

The transmitter fully compensates oxygen, ozone, free chlorine, and total chlorine readings for changes in membrane permeability caused by temperature changes.

For pH measurements — pH is available with free chlorine only — the 5081-A features automatic buffer recognition and stabilization check. Buffer pH and temperature data for commonly used buffers are stored in the transmitter. Glass impedance diagnostics warn the user of an aging or failed pH sensor.

GENERAL SPECIFICATIONS FOR 5081-A

Input ranges: 0-330 nA, 0.3-4µA, 3.7-30 µA, 27-100 µA

Repeatability (input): ±0.1% of range

Linearity (input): ±0.3% of range

Temperature range: 0-100°C (0-150°C for steam sterilizable sensors)

Temperature accuracy using RTD: ±0.5°C between 0 and 50°C, ±1°C above 50°C

Temperature accuracy using 22k NTC: ±0.5°C between 0 and 50°C, ±2°C above 50°C

Digital Communications:

HART: PV, SV, TV, and 4V assignable to measurement (oxygen, ozone, or chlorine), temperature, pH, and sensor current.

Fieldbus: Four (4) AI blocks assignable to measurement (oxygen, ozone, or chlorine), temperature, pH, and sensor current; execution time 75 msec. One PID block; execution time 150 msec. Device type: 4083. Device revision: 1. Certified to ITK 4.01.

SPECIFICATIONS — OXYGEN

Measurement Range: 0-99 ppm (mg/L), 0-200% saturation

Resolution: 0.01 ppm, 0.1 ppb for 499A TrDO sensor

Temperature correction for membrane permeability: automatic between 0 and 50°C (can be disabled)

Calibration: air calibration (user must enter barometric pressure) or calibration against a standard instrument

SENSORS — OXYGEN:

499A DO-54 for ppm level

499A TrDO-54 for ppb level

Hx438 and Gx448 steam-sterilizable oxygen sensors

SPECIFICATIONS — FREE CHLORINE

Measurement Range: 0-20 ppm (mg/L) as Cl_2

Resolution: 0.001 ppm (Autoranges at 0.999 to 1.00 and 9.99 to 10.0)

Temperature correction for membrane permeability: automatic between 0 and 50°C (can be disabled)

pH Correction: Automatic between pH 6.0 and 9.5. Manual pH correction is also available.

Calibration: against grab sample analyzed using portable test kit.

SENSOR — FREE CHLORINE:

499A CL-01-54

SPECIFICATIONS — pH

Application: pH measurement available with free chlorine only

Measurement Range: 0-14 pH

Resolution: 0.01 pH

Sensor Diagnostics: Glass impedance (for broken or aging electrode) and reference offset. Reference impedance (for fouled reference junction) is not available.

Repeatability: ±0.01 pH at 25°C

SENSORS — pH:

Use 399-09-62, 399-14, or 399VP-09.

SPECIFICATIONS — TOTAL CHLORINE

Measurement Range: 0-20 ppm (mg/L) as Cl_2

Resolution: 0.001 ppm (Autoranges at 0.999 to 1.00 and 9.99 to 10.0)

Temperature correction for membrane permeability: automatic between 5 and 35°C (can be disabled)

Calibration: against grab sample analyzed using portable test kit.

SENSOR — TOTAL CHLORINE:

499A CL-02-54 (must be used with SCS 921)

SPECIFICATIONS — OZONE

Measurement Range: 0-10 ppm (mg/L)

Resolution: 0.001 ppm (Autoranges at 0.999 to 1.00 and 9.99 to 10.0)

Temperature correction for membrane permeability: automatic between 5 and 35°C (can be disabled)

Calibration: against grab sample analyzed using portable test kit.

SENSOR — OZONE:

499A OZ-54

5081-A AMPEROMETRIC TRANSMITTER

HAZARDOUS LOCATION APPROVAL

Intrinsic Safety (with appropriate safety barrier):

Class I, II, III, Div. 1
Groups A-G
T4 Tamb = 70°C

Exia Entity
Class I, Groups A-D
Class II, Groups E-G
Class III
T4 Tamb = 70°C

ATEX CE 0600 II 1 G
Baseefa02ATEX1284
EEx ia IIC T4
Tamb = -20°C to +65°C

Non-Incendive:

Class I, Div. 2, Groups A-D
Dust Ignition Proof
Class II & III, Div. 1, Groups E-G
Type 4X Enclosure

Class I, Div. 2, Groups A-D
Suitable for
Class II, Div. 2, Groups E-G
T4 Tamb = 70°C

Explosion-Proof:

Class I, Div. 1, Groups B-D
Class II, Div. 1, Groups E-G
Class III, Div. 1

Class I, Groups B-D
Class II, Groups E-G
Class III
Tamb = 65°C max

TRANSMITTER DISPLAY DURING CALIBRATION AND PROGRAMMING (FIGURE 1)

1. Continuous display of pH, ORP, conductivity, oxygen, chlorine, or ozone reading.
2. Units: pH, mV, µS/cm, mS/cm, ppm, ppb, or % saturation.
3. Current menu appears here.
4. Submenus, prompts, and diagnostic readings appear hear.
5. Commands available in each submenu or at each prompt appear here.
6. Hold appears when the transmitter is in hold.
7. Fault appears when the transmitter detects a sensor or instrument fault.
8. © flashes during digital communication.

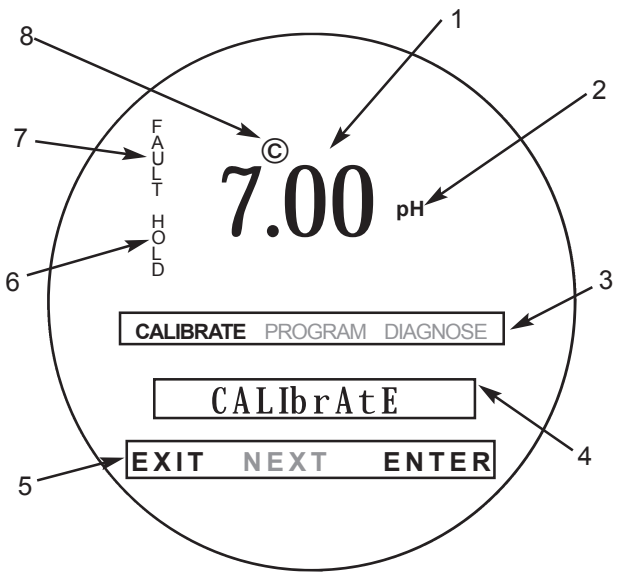

FIGURE 1. TRANSMITTER DISPLAY DURING CALIBRATION AND PROGRAMMING

The program display screen allows access to calibration and programming menus.

INFRARED REMOTE CONTROLLER (FIGURE 2)

1. Pressing a menu key allows the user access to calibrate, program, or diagnostic menus.
2. Press ENTER to store data and settings. Press NEXT to move from one submenu to the next. Press EXIT to leave without storing changes.
3. Use the editing keys to scroll through lists of allowed settings or to change a numerical setting to the desired value.
4. Pressing HOLD puts the transmitter in hold and sends the output current to a pre-programmed value. Pressing RESET causes the transmitter to abandon the present operation and return to the main display.

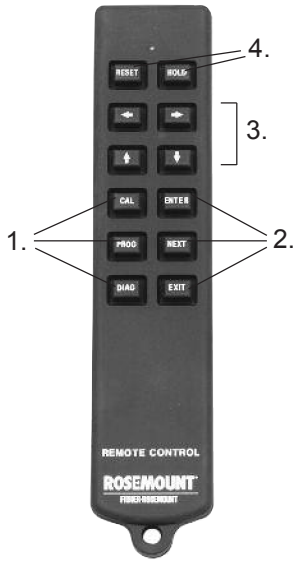

FIGURE 2. INFRARED REMOTE CONTROLLER

HART COMMUNICATION (FIGURE 3)

Figure 3 shows how HART® communication can be used with the 5081-HT. Use HART to configure and read process variables using the 375 HART Communicator, a personal computer, or any other hosts that support HART communication protocol. HART allows communication through to AMS.

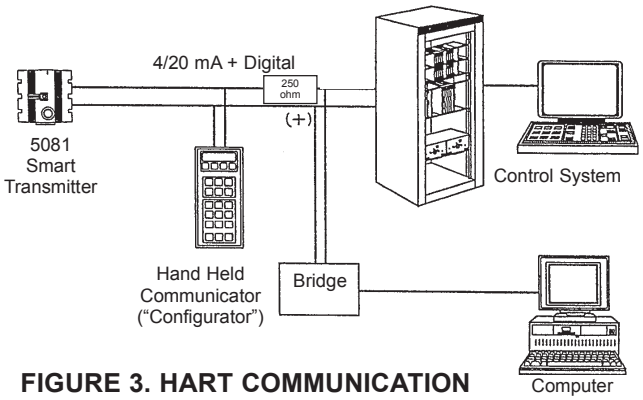

FIGURE 3. HART COMMUNICATION

FOUNDATION™ FIELDBUS (FIGURE 4)

Figure 4 shows a 5081-A-FF being used to measure and control pH and chlorine levels in drinking water. The figure also shows three ways in which Fieldbus communication can be used to read process variables and configure the transmitter.

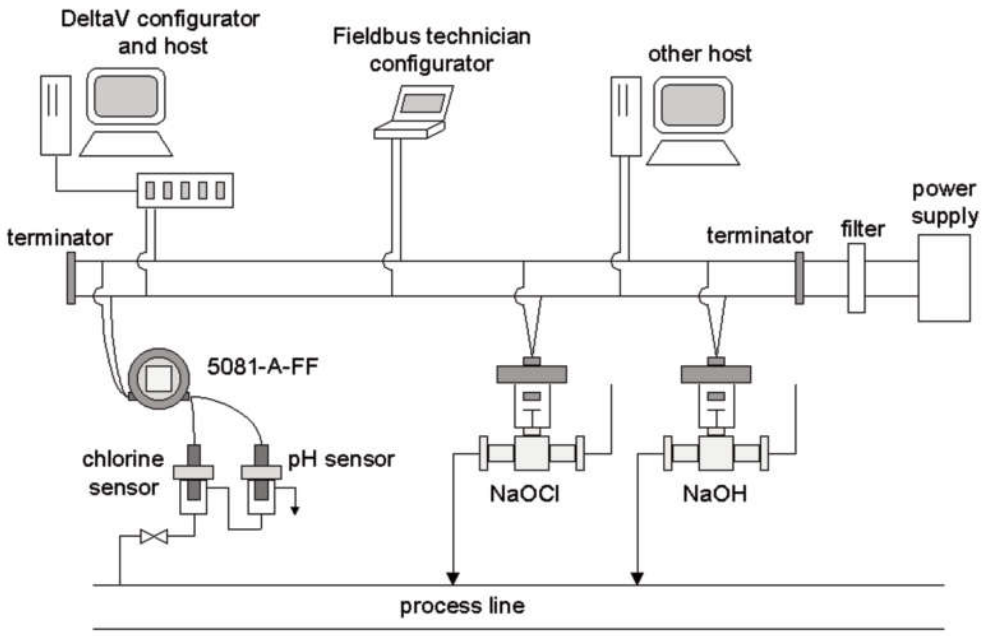

FIGURE 4. CONFIGURING 5081-A TRANSMITTER WITH FOUNDATION FIELDBUS

ASSET MANAGEMENT SOLUTIONS (AMS) (FIGURES 5, 6, and 7)

Rosemount Analytical AMS windows provide access to all transmitter measurement and configuration variables. The user can read raw data, final data, and program settings and can reconfigure the transmitter from anywhere in the plant. Figures 5 and 6 show two of the many configuration and measurement screens available using HART AMS. Figure 7 shows a configuration screen available through AMS Inside using FOUNDATION Fieldbus.

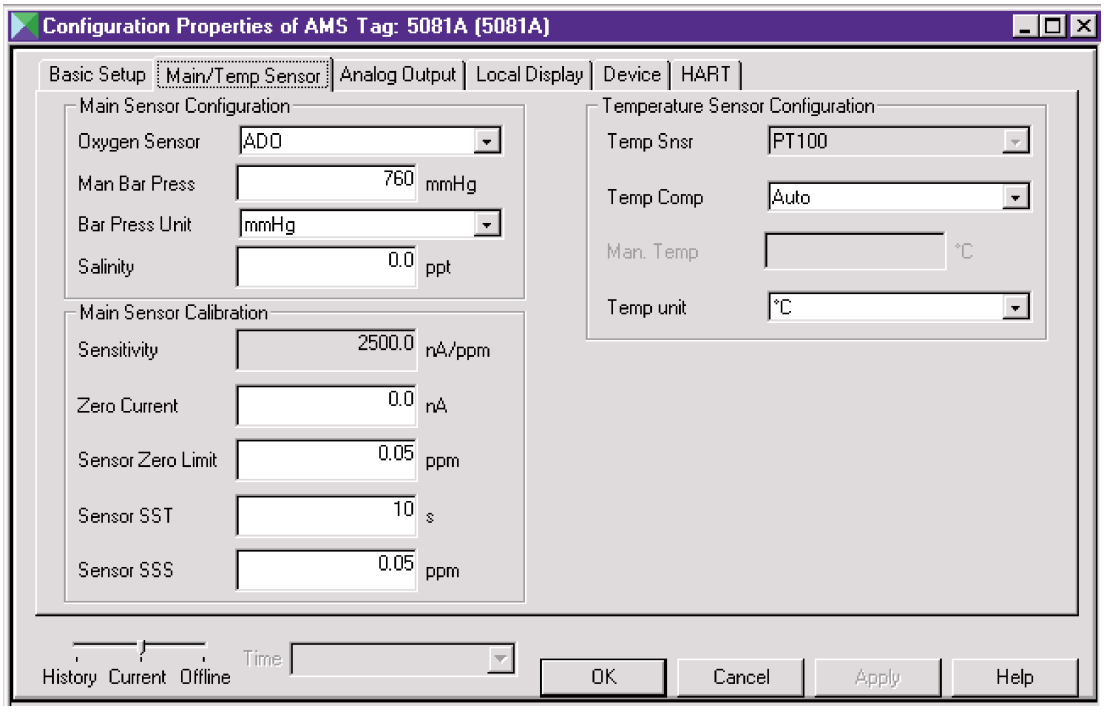

FIGURE 5. AMS CONFIGURATION SCREEN USING HART

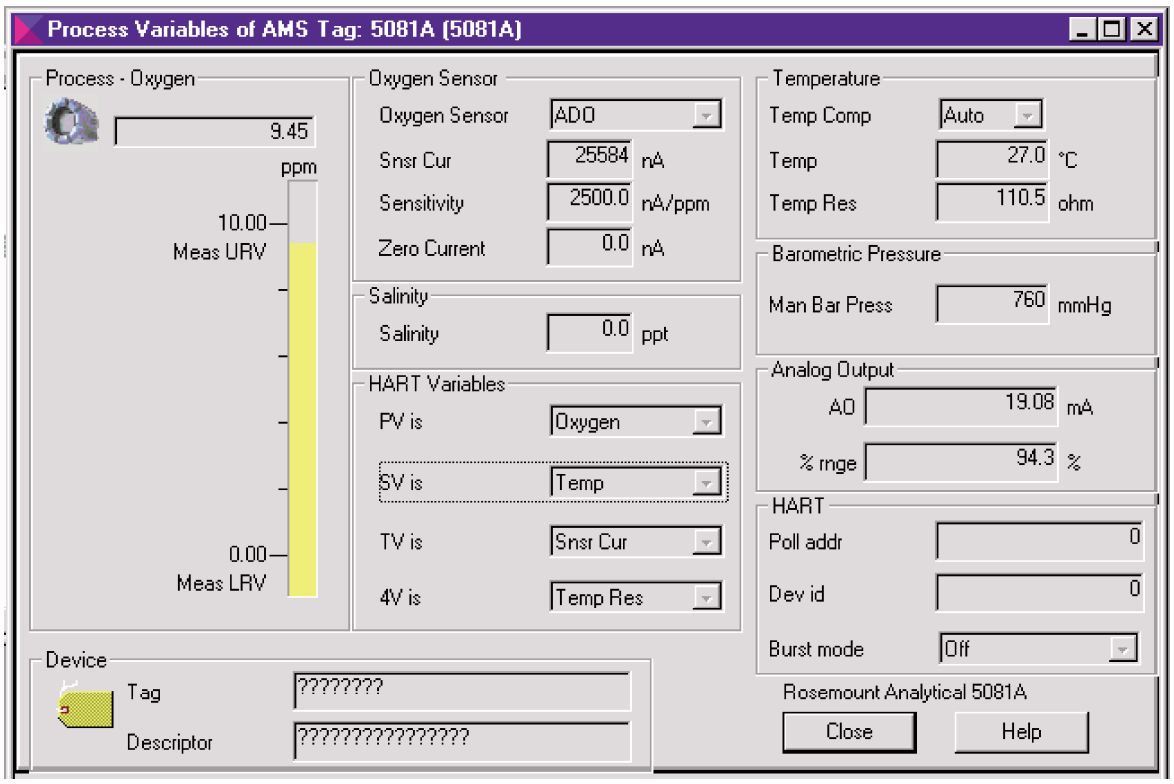

FIGURE 6. AMS MEASUREMENT SCREEN USING HART

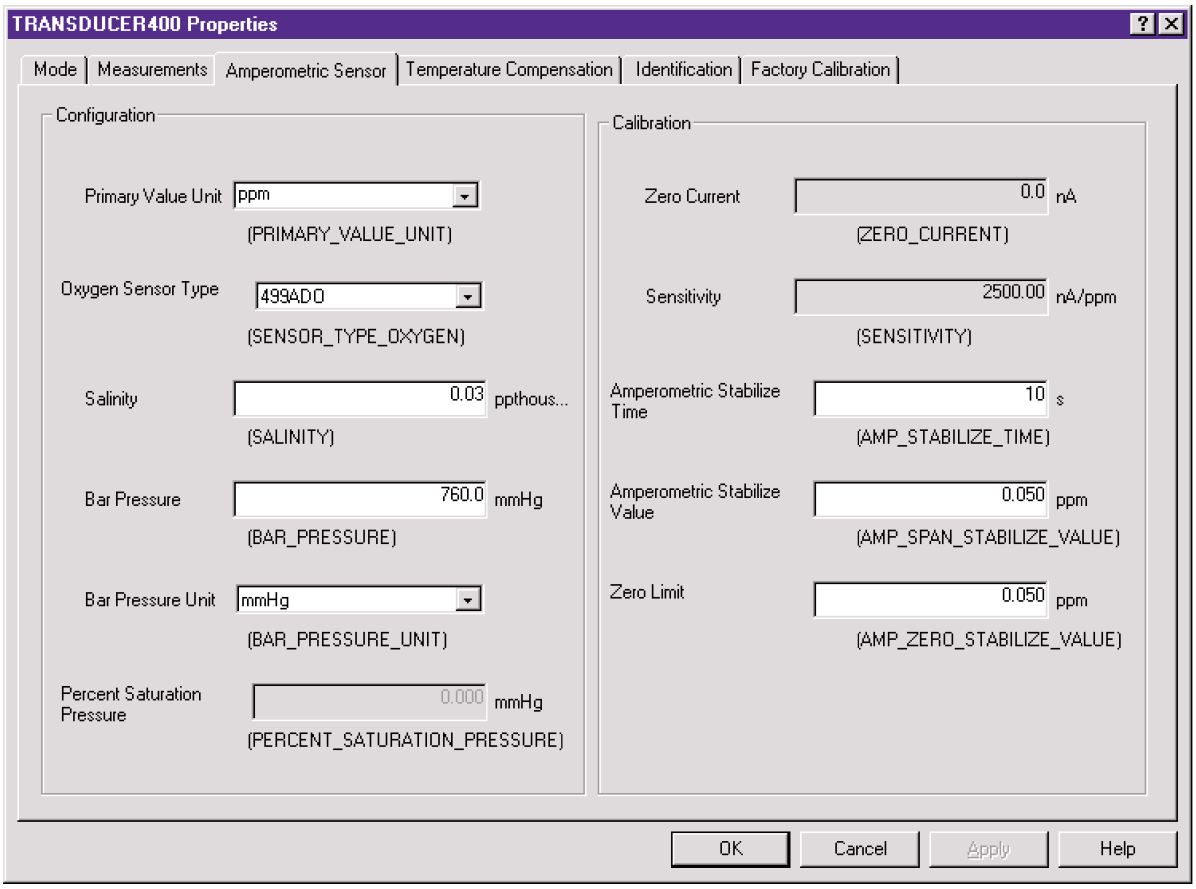

FIGURE 7. AMS INSIDE CONFIGURATION SCREEN USING FOUNDATION FIELDBUS

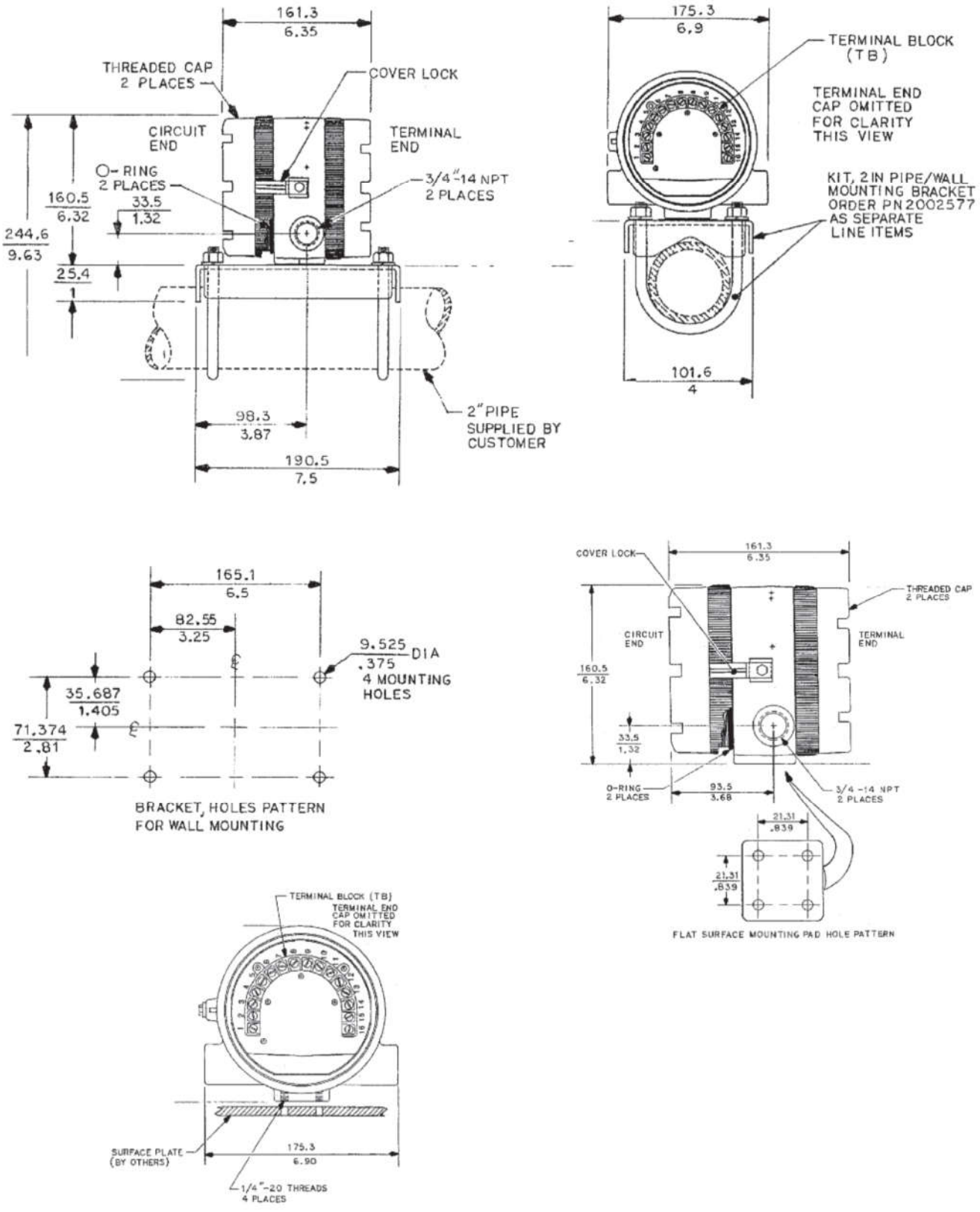

FIGURE 8. 5081 MOUNTING AND DIMENSIONAL DRAWINGS

ORDERING INFORMATION

The **5081 Two-Wire Transmitter** is intended for the determination of pH/ORP, conductivity (both contacting and toroidal), and for measurements using membrane-covered amperometric sensors (oxygen, ozone, and chlorine). For free chlorine measurements, which often require continuous pH correction, a second input for a pH sensor is available. A hand-held infrared remote controller is required for local configuration and calibration of the transmitter.

5081	SMART TWO-WIRE MICROPROCESSOR TRANSMITTER
CODE	**REQUIRED SELECTION**
P	pH/ORP
C	Contacting conductivity
T	Toroidal conductivity
A	Amperometric (oxygen, ozone, and chlorine)

CODE	REQUIRED SELECTION
HT	Analog 4-20 mA output with superimposed HART digital signal
FF	Foundation Fieldbus digital output
FI	Foundation Fieldbus digital output with FISCO

CODE	REQUIRED SELECTION
20	Infrared remote controller included
21	Infrared remote controller not included

CODE	AGENCY APPROVALS
60	No approval
67	FM approved intrinsically safe, non-incendive (when used with appropriate sensor and safety barrier), and explosion-proof
69	CSA approved intrinsically safe, non-incendive (when used with appropriate sensor and safety barrier), and explosion-proof
73	ATEX approved intrinsically safe (when used with appropriate sensor and safety barrier)

5081-P-HT-20-67 EXAMPLE

ACCESSORIES

MODEL/PN	DESCRIPTION
515	DC loop power supply (see product data sheet 71-515)
230A	Alarm module (see product data sheet 71-230A)
24479-00	Infrared remote controller (required, one controller can operate any 5081 transmitter)
23820-00	2-in. pipe mounting kit
9241178-00	Stainless steel tag, specify marking
475	To order HART 475 Communicator, call Rosemount Measurement at (800) 999-9307
AMS software	To order AMS software, call Rosemount Measurement at (800) 999-9307

Emerson Process Management

2400 Barranca Parkway
Irvine, CA 92606 USA
Tel: (949) 757-8500
Fax: (949) 474-7250

rosemountanalytical.com

© Rosemount Analytical Inc. 2015

©2015 Rosemount Analytical, Inc. All rights reserved.

The Emerson logo is a trademark and service mark of Emerson Electric Co. Brand name is a mark of one of the Emerson Process Management family of companies. All other marks are the property of their respective owners.

The contents of this publication are presented for information purposes only, and while effort has been made to ensure their accuracy, they are not to be construed as warranties or guarantees, express or implied, regarding the products or services described herein or their use or applicability. All sales are governed by our terms and conditions, which are available on request. We reserve the right to modify or improve the designs or specifications of our products at any time without notice.

ROSEMOUNT® Analytical

EMERSON™ Process Management

Product Data Sheet
00813-0100-3491, Rev AB
October 2019

Rosemount™ 499ADO

Dissolved Oxygen Sensor



A robust sensor for reliably measuring dissolved oxygen

The Rosemount 499ADO dissolved oxygen sensor is an easy-to-use amperometric sensor with a rugged construction. This sensor is ideal for measuring dissolved oxygen in aeration basins in municipal and industrial wastewater treatment plants.

ROSEMOUNT™

EMERSON™

Overview



Ease of maintenance

- Extend sensor life with simple membrane and electrolyte replacement; no special tools needed.
- Automatic temperature correction with integral Pt-100 resistance temperature device (RTD).
- Easy in-air calibration.

Versatile installation option

- Forward and rear facing 1-in. male national pipe thread (MNPT) process connections to meet a variety of application installation requirements.
- Installs in aeration basins and sidestream samples.
- Variopol (VP6) cable connector option eliminates cable twisting and allows for quick sensor replacement.

High performance design

- Measures dissolved oxygen between 0 and 20 ppm.
- Operates in process temperatures up to 122 °F (50 °C).
- High accuracy of ±0.2 ppm at 77 °F (25 °C).

Contents

Overview..... 2
Ordering information..... 3
Specifications..... 3
Dimensional drawings..... 5
Accessories..... 12

Ordering information



The Rosemount 499ADO Dissolved Oxygen Sensor is intended for the determination of dissolved oxygen at the ppm level. Sensors can be immersed directly in aeration basins using the handrail mounted assembly or mounted in a variety of flow cells. The sensor is available with either an integral cable or Variopol (VP6) quick disconnect fitting. Three replacement membrane assemblies, three O-rings, and a 4 oz. (125 mL) bottle of electrolyte solution are provided with each sensor.

Table 1: Rosemount 499ADO Ordering Information

Option	Description
499ADO	Dissolved Oxygen Sensor
Transmitter compatibility	
54	Rosemount 1056, 1066-DO, 56, and 5081-A compatible
Cable options	
_	Integral 25-ft. (7.6 m) optimum EMI/RFI protected cable
VP	Sensor with VP6 fittings (requires VP interconnecting cable)
02	Integral 15-ft. (4.6 m) optimum EMI/RFI protected cable
03	Integral 33-ft. (10 m) optimum EMI/RFI protected cable
50	Integral 50-ft. (15 m) optimum EMI/RFI protected cable
06	Integral 100-ft. (30 m) optimum EMI/RFI protected cable
Special	
_	No selection
99	Special (consult factory)
Calibration and conformance certificates - optional level	
CC	Certificate of Calibration (no test data given)
LC	Loop Calibration Certificate (sensor and transmitter calibrated together, with test data)
EC	Electronic Calibration Certificate (sensor calibrated against factory instrument, with test data)

Specifications

Table 2: Sensor Specifications

Physical characteristics	Specifications
Range	0 to 20 ppm (mg/L) as O_2. For measurements at the ppb level, choose Rosemount 499ATrDO.
Pressure	0 to 65 psig (101 to 549 kPa abs)
Temperature (operating)	32 to 122 °F (0 to 50 °C)

Table 2: Sensor Specifications *(continued)*

Physical characteristics	Specifications
Process connection	1-in. male national pipe thread (MNPT)
Wetted parts	Noryl®, Viton®, EPDM, Teflon® , and silicone
Cathode	Gold (not normally wetted)
Accuracy	±0.2 ppm at 77 °F (25 °C)
Linearity	2% (typical)
Repeatability	±0.5% of reading at 77 °F (25 °C)
Response time	<20 sec to 90% of final reading (0 to 2 ppm) at 77 °F (25 °C)
Electrolyte volume	0.8 oz. (25 mL), approximately
Electrolyte life	4 to 6 months (approximately)
Cable length	See Table 1 for standard cable lengths.
Cable length (maximum)	300 ft. (91 m), up to 100 ft. (30.5 m) is standard.
Sample flow	Flow through: 1 to 5 gpm (3.8 to 19 L/min) Open channel: 1 ft./sec (0.3 m/sec) Low flow cell: 2 to 5 gph (7.6 to 19 L/hr) Agitation produced by bubbles in aeration basins usually provides adequate flow.
Weight/shipping weight	1 lb./3 lb. (0.5 kg/1.5 kg)

Table 3: Other Specifications

Type	PN	Wetted materials	Process connection	Maximum temperature	Maximum pressure
1½-in. tee	23567-00	CPVC and Buna N; body is schedule 80 CPVC	1½-in. socket	122 °F (50 °C)	65 psig (549 kPa abs)
2-in. tee	915240-03	PVC and Buna N; body is schedule 80 PVC	¾-in. NFPT	120 °F (49 °C)	60 psig (515 kPa abs)
	915240-04		1-in. NFPT		
	915240-05		1½-in. NFPT		
Low flow cell (1)	24091-01	Polycarbon-ate/ polyester, 316 stainless steel, and silicone	Compression fitting for ¼-in. O.D. tubing or ¼-in. female national pipe thread (FNPT)	158 °F (70 °C)	90 psig (722 kPa abs)
Spray cleaner	12707-00	PVC, polypropylene, and 315 stainless steel	Connection for cleaning fluid: Compression fitting for ¾-in. tubing		
Valved rotameter	9390004 for use with low flow cell Flow: 0.5 to 5 gph (1.4 to 19 L/hr)	Acrylic, 316 stainless steel, and Viton	¼-in. NFPT (316 stainless steel)	150 °F (65 °C)	100 psig (858 kPa abs)

(1) Temperature and pressure specifications for the low flow cell exceed the temperature and pressure specifications for the sensor.

Dimensional drawings

Figure 1: Standard Sensor with Integral Cable

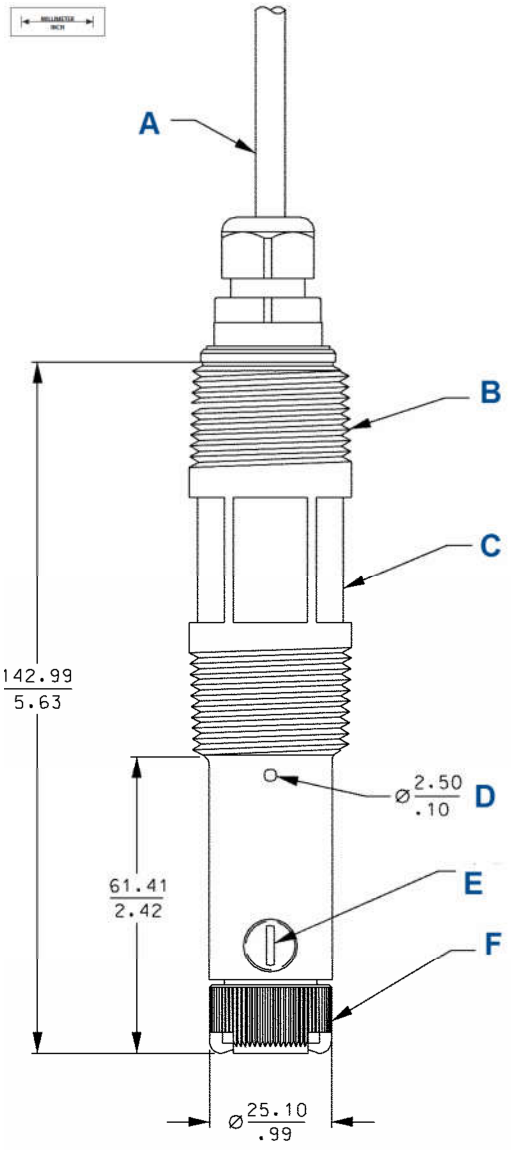

A. Sensor cable
B. 1-in. national pipe thread (NPT), two places
C. 1-3/16-in.-wrench opening
D. Pressure equalizing port, two places
E. ⅛-in. NPT, electolyte fill plug
F. Membrane retainer

Figure 2: Sensor with Variopol Cable Connector

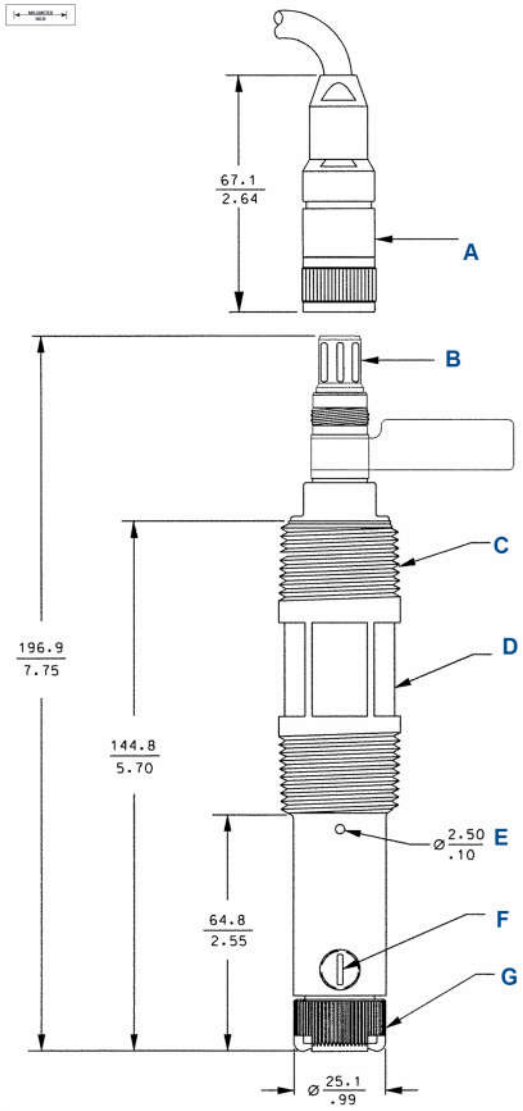

A. Variopol receptacle (female connector)
B. Variopol plug (male connector)
C. 1-in. NPT, two places
D. 1-3/16-in. wrench opening
E. Pressure equalizing port, two places
F. ⅛-in. NPT electrolyte fill plug
G. Membrane retainer

Figure 3: Low Flow Cell (PN 24091-00)

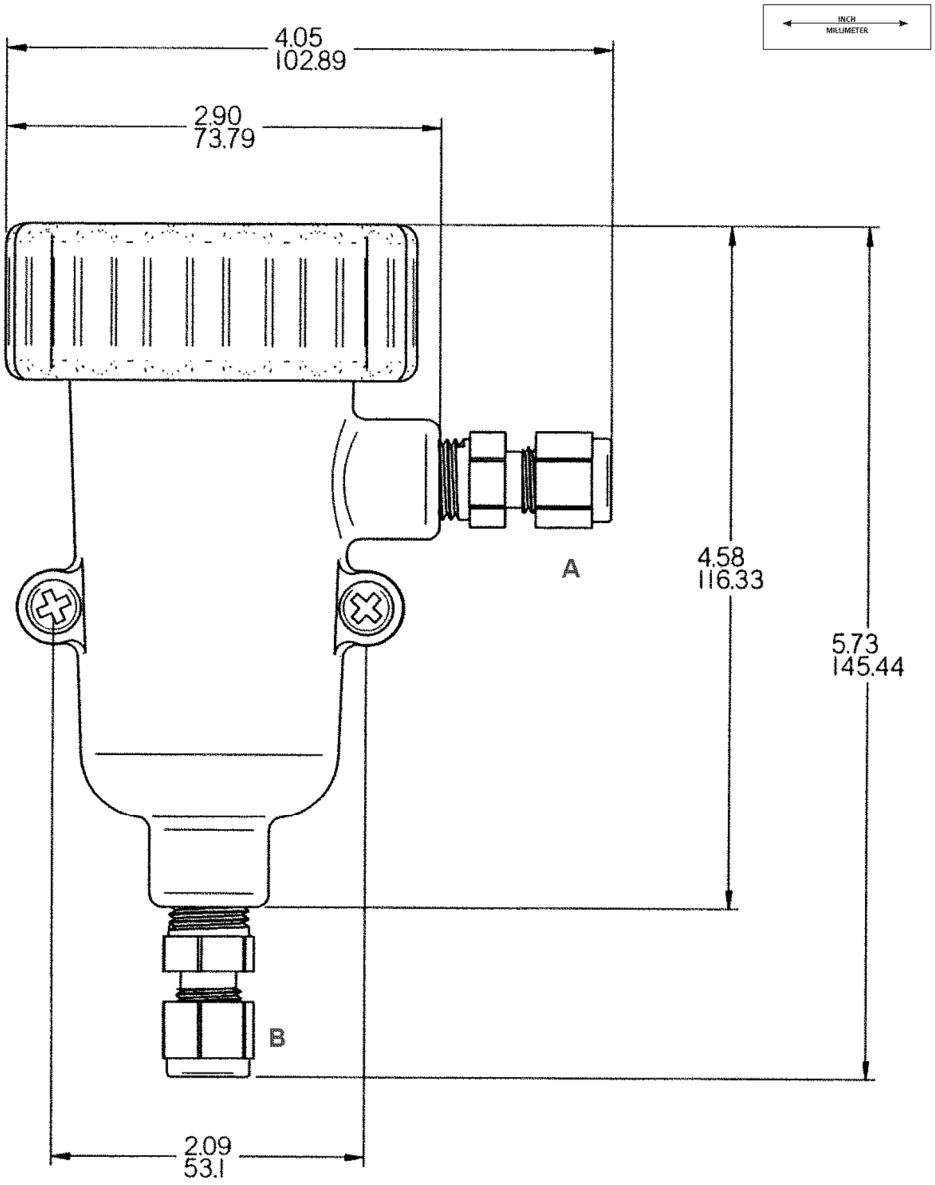

A. Outlet
B. Inlet

Figure 4: Flow-Through Tee (1½-in.) (PN 23567-00)

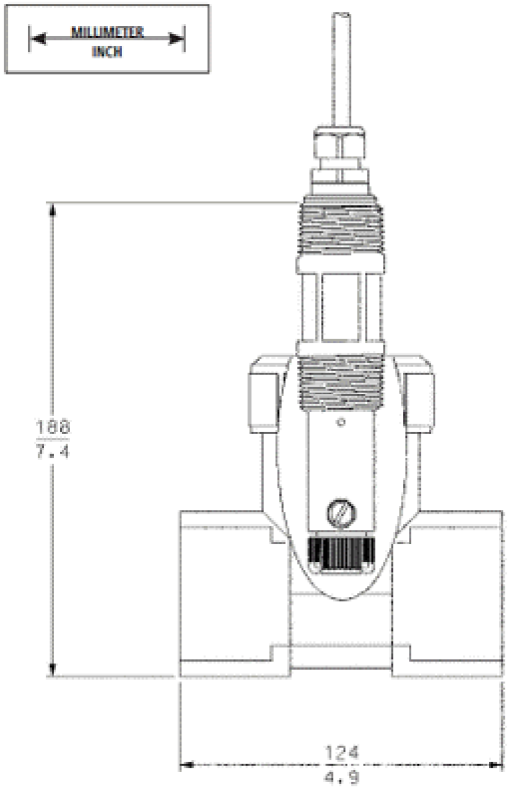

Allow at least 3.5 in. (90 mm) head room for sensor removal.

Figure 5: Flow-Through Tee (2 in.) (PN 915240-03, -04, -05)

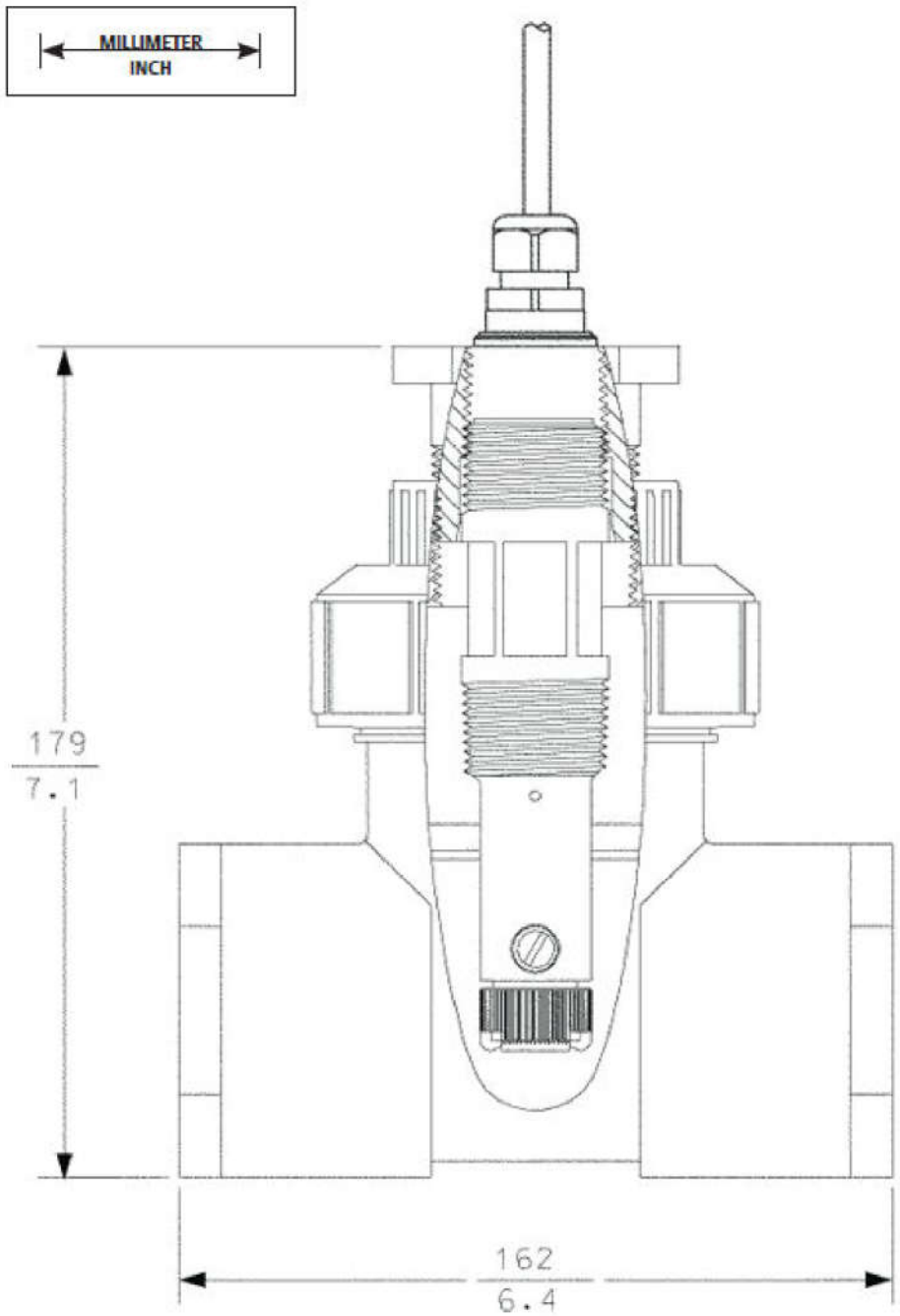

Allow at least 6 in. (150 mm) head room for sensor removal.

Figure 6: Handrail Mounting Assembly (PN 11275-01)

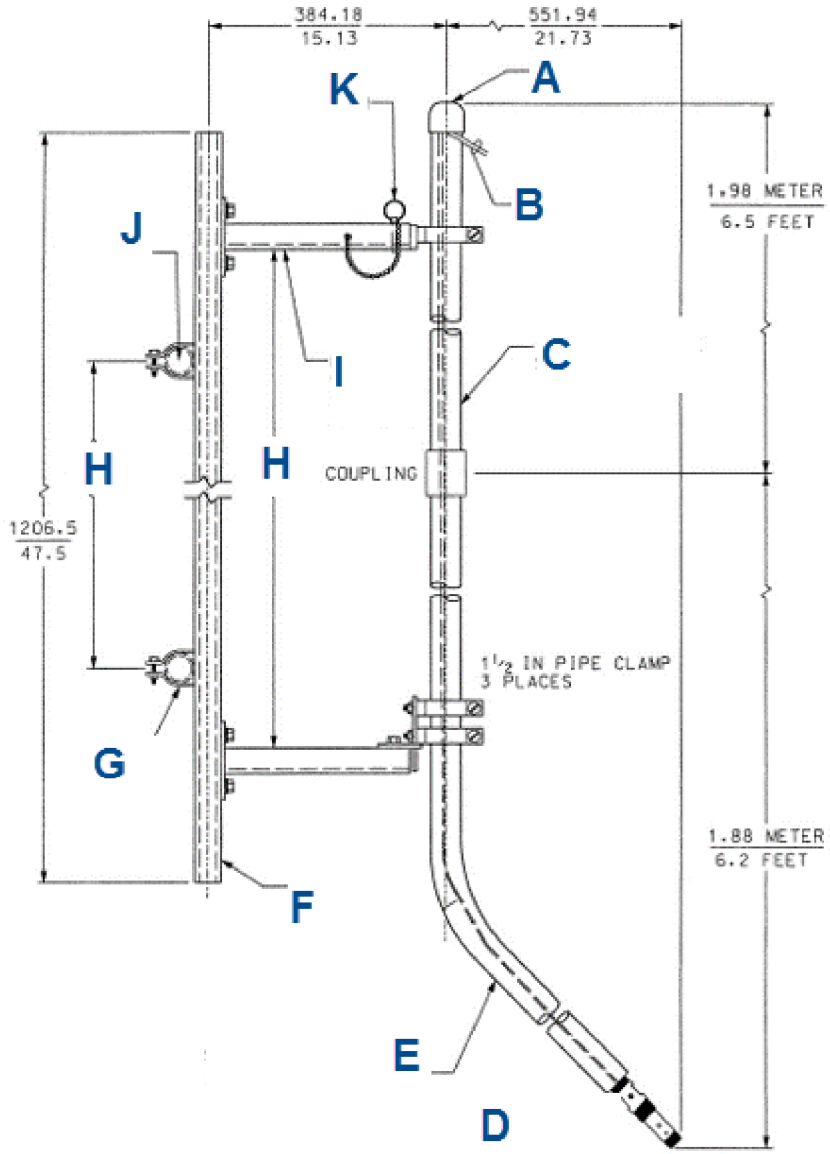

A. *End cap PVC*
B. *Sensor cable*
C. *1½-in. PVC pipe schedule 80*
D. *Sensor Rosemount 499: Regularly check to make sure connections are water tight.*
E. *Sweep pipe with 1-in. male national pipe thread (MNPT) adapter*
F. *Unistrut 1⅝-in. x 1⅝-in. aluminum*
G. *1½-in. pipe clamp two places*
H. *Can be any convenient dimension*
I. *Mounting channel aluminum two places*
J. *Customer handrail two places*
K. *Locking pin with bead chain*

Figure 7: Jet Spray Cleaner (PN 12707-00)

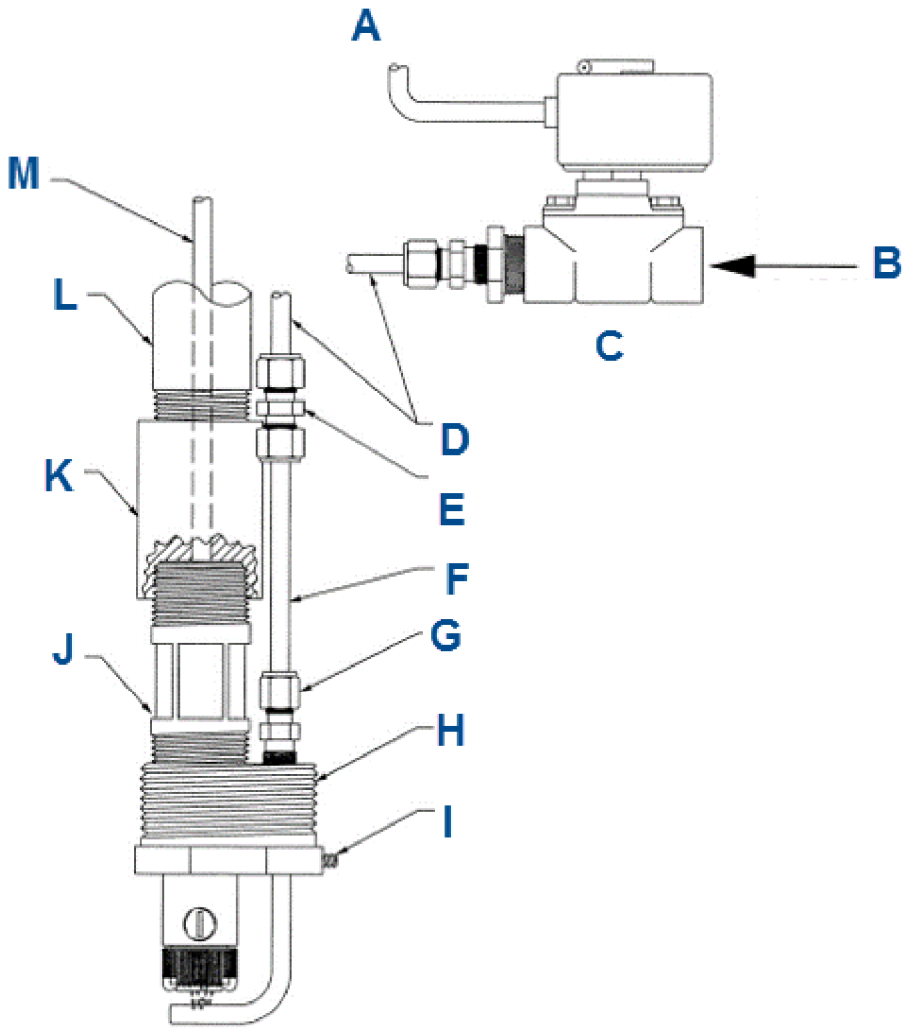

A. To timer (supplied by others) or use interval timer in 54ea
B. Water, air, or cleaning solution (by others)
C. Solenoid valve (supplied by others)
D. Tubing (supplied by others)
E. ¼-in. union compression fitting, polypropylene
F. ¼-in. 316 stainless steel tubing
G. ¼-in. male connector, polypropylene. Tighten to hold spray arm in position.
H. PVC
I. Stainless steel set screw to adjust spray nozzle height
J. Sensor
K. 1-in. coupling (supplied by others)
L. 1-in. pipe (supplied by others)
M. Sensor cable

Accessories

Table 4: Connector Cable (Required for All First Time Installations)

Part number	Description
23747-02	Cable, VP 6, conductivity/amperometric, 10-ft. (3.0 m)
23747-03	Cable, VP 6, conductivity/amperometric, 50-ft. (15.2 m)
23747-04	Cable, VP 6, conductivity/amperomentric, 4-ft. (1.2 m)
23747-05	Cable, VP 6, conductivity/amperometric, 2.25-ft. (0.7 m)
23747-06	Cable, VP 6, conductivity/amperometric, 2.5-ft. (0.8 m)
23747-07	Cable, VP 6, conductivity/amperometric, 15-ft. (4.6 m)
23747-08	Cable, VP 6, conductivity/amperometric, 20-ft. (6.1 m)
23747-09	Cable, VP 6, conductivity/amperometric, 25-ft. (7.6 m)
23747-10	Cable, VP 6, conductivity/amperometric, 30-ft. (9.1 m)
23747-11	Cable, VP 6, conductivity/amperometric, 100-ft. (30.5 m)

Table 5: Other Accessories

Part number	Description
11275-01	Handrail mounting assembly
12707-00	Jet spray cleaner
23747-00	Interconnect cable, prepped, specify length, per foot
23567-00	Tee, flow-through, 1½-in.
914240-03	Tee, flow-through, 2-in. PVC, ¾-in. national pipe thread (NPT)
914240-04	Tee, flow-through, 2-in. PVC, 1-in. NPT
915240-05	Tee, flow-through, 2-in. PVC, 1½-in. NPT
33211-00	Retrofit adapter PN 91524-xx tees
33521-01	Smooth membrane retainer (for fouling and dirty applications)
9390004	Rotameter: 0.5 - 5.0 gph
9200266-LQD	Cable, 5 conductors 2/22 GA 3/24 GA OD JKT PVC
9200275	Extension cable, shielded 9-cond, unprepped, specify length, per foot

Table 6: Spare Parts

Part number	Description
23501-00	Membrane assembly with O-ring, dissolved oxygen, quantity - 1
23502-00	Membrane assembly with O-ring, dissolved oxygen, quantity - 3
33521-00	Membrane retainer
33523-00	Fill plug
9210264	Amperometric sensor fill solution, 4 oz. (125 mL)
9550094	O-ring, Viton® 2-014

Reference Manual
00809-0100-3581, Rev AC
October 2019

Rosemount™ 5081

Explosion Proof, Single-Input Intelligent Transmitter



ROSEMOUNT™

EMERSON™

Essential instructions

Read this page before proceeding!

Emerson designs, manufactures, and tests its products to meet many national and international standards. Because these instruments are sophisticated technical products, you must properly install, use, and maintain them to ensure they continue to operate within their normal specifications. The following instructions must be adhered to and integrated into your safety program when installing, using, and maintaining Emerson products. Failure to follow the proper instructions may cause any one of the following situations to occur: loss of life, personal injury, property damage, damage to this instrument, and warranty invalidation.

- Read all instructions prior to installing, operating, and servicing the product.
- If this Reference Manual is not the correct one, call 1-800-854-8257 or 949-757-8500 to request the correct Reference Manual. Save this Reference Manual for future reference.
- If you do not understand any of the instructions, contact your Emerson representative for clarification.
- Follow all warnings, cautions, and instructions marked on and supplied with the product.
- Inform and educate your personnel in the proper installation, operation, and maintenance of the product.
- Install equipment as specified in the installation instructions of the appropriate Reference Manual and per applicable local and national codes. Connect all products to the proper electrical and pressure sources.
- To ensure proper performance, use qualified personnel to install, operate, update, program, and maintain the product.
- When replacement parts are required, ensure that qualified people use replacement parts specified by Emerson. Unauthorized parts and procedures can affect the product's performance, place the safe operation of your process at risk, and VOID YOUR WARRANTY. Look-alike substitutions may result in fire, electrical hazards, or improper operation.
- Ensure that all equipment doors are closed and protective covers are in place, except when maintenance is being performed by qualified people, to prevent electrical shock and personal injury.

⚠ WARNING

Physical access

Unauthorized personnel may potentially cause significant damage to and/or misconfiguration of end users' equipment. This could be intentional or unintentional and needs to be protected against.

Physical security is an important part of any security program and fundamental to protecting your system. Restrict physical access by unauthorized personnel to protect end users' assets. This is true for all systems used within the facility.

Notice

ROSEMOUNT ("SELLER") SHALL NOT BE LIABLE FOR TECHNICAL OR EDITORIAL ERRORS IN THIS MANUAL OR OMISSIONS FROM THIS MANUAL. SELLER MAKES NO WARRANTIES, EXPRESSED OR IMPLIED, INCLUDING THE IMPLIED WARRANTIES OF MERCHANTABILITY AND FITNESS FOR A PARTICULAR PURPOSE, WITH RESPECT TO THIS MANUAL AND, IN NO EVENT, SHALL SELLER BE LIABLE FOR ANY SPECIAL OR CONSEQUENTIAL DAMAGES INCLUDING, BUT NOT LIMITED TO, LOSS OF PRODUCTION, LOSS OF PROFITS, ETC.

PRODUCT NAMES USED HEREIN ARE FOR MANUFACTURER OR SUPPLIER IDENTIFICATION ONLY AND MAY BE TRADEMARKS/ REGISTERED TRADEMARKS OF THESE COMPANIES.

THE CONTENTS OF THIS PUBLICATION ARE PRESENTED FOR INFORMATIONAL PURPOSES ONLY, AND WHILE EVERY EFFORT HAS BEEN MADE TO ENSURE THEIR ACCURACY, THEY ARE NOT TO BE CONSTRUED AS WARRANTIES OR GUARANTEES, EXPRESSED OR IMPLIED, REGARDING THE PRODUCTS OR SERVICES DESCRIBED HEREIN OR THEIR USE OR APPLICABILITY. WE RESERVE THE RIGHT TO MODIFY OR IMPROVE THE DESIGNS OR SPECIFICATIONS OF SUCH PRODUCTS AT ANY TIME.

SELLER DOES NOT ASSUME RESPONSIBILITY FOR THE SELECTION, USE, OR MAINTENANCE OF ANY PRODUCT. RESPONSIBILITY FOR PROPER SELECTION, USE, AND MAINTENANCE OF ANY SELLER PRODUCT REMAINS SOLELY WITH THE PURCHASER AND END-USER.

Warranty

1. LIMITED WARRANTY: Subject to the limitations contained in Section 2 herein and except as otherwise expressly provided herein, Rosemount ("Seller") warrants that the firmware will execute the programming instructions provided by Seller and that the Goods manufactured or Services provided by Seller will be free from defects in materials or workmanship under normal use and care until the expiration of the applicable warranty period. Goods are warranted for twelve (12) months from the date of initial installation or eighteen (18) months from the date of shipment by Seller, whichever period expires first. Consumables and Services are warranted for a period of 90 days from the date of shipment or completion of the Services. Products purchased by Seller from a third party for resale to Buyer ("Resale Products") shall carry only the

warranty extended by the original manufacturer. Buyer agrees that Seller has no liability for Resale Products beyond making a reasonable commercial effort to arrange for procurement and shipping of the Resale Products. If Buyer discovers any warranty defects and notifies Seller thereof in writing during the applicable warranty period, Seller shall, at its option, promptly correct any errors that are found by Seller in the firmware or Services, or repair or replace F.O.B. point of manufacture that portion of the Goods or firmware found by Seller to be defective, or refund the purchase price of the defective portion of the Goods/Services. All replacements or repairs necessitated by inadequate maintenance, normal wear and usage, unsuitable power sources, unsuitable environmental conditions, accident, misuse, improper installation, modification, repair, storage or handling, or any other cause not the fault of Seller are not covered by this limited warranty, and shall be at Buyer's expense. Seller shall not be obligated to pay any costs or charges incurred by Buyer or any other party except as may be agreed upon in writing in advance by an authorized Seller representative. All costs of dismantling, reinstallation and freight, and the time and expenses of Seller's personnel for site travel and diagnosis under this warranty clause shall be borne by Buyer unless accepted in writing by Seller. Goods repaired and parts replaced during the warranty period shall be in warranty for the remainder of the original warranty period or ninety (90) days, whichever is longer. This limited warranty is the only warranty made by Seller and can be amended only in a writing signed by an authorized representative of Seller. Except as otherwise expressly provided in the Agreement, THERE ARE NO REPRESENTATIONS OR WARRANTIES OF ANY KIND, EXPRESSED OR IMPLIED, AS TO MERCHANTABILITY, FITNESS FOR PARTICULAR PURPOSE, OR ANY OTHER MATTER WITH RESPECT TO ANY OF THE GOODS OR SERVICES. It is understood that corrosion or erosion of materials is not covered by our guarantee.

2. LIMITATION OF REMEDY AND LIABILITY: SELLER SHALL NOT BE LIABLE FOR DAMAGES CAUSED BY DELAY IN PERFORMANCE. THE SOLE AND EXCLUSIVE REMEDY FOR BREACH OF WARRANTY HEREUNDER SHALL BE LIMITED TO REPAIR, CORRECTION, REPLACEMENT, OR REFUND OF PURCHASE PRICE UNDER THE LIMITED WARRANTY CLAUSE IN SECTION 1 HEREIN. IN NO EVENT, REGARDLESS OF THE FORM OF THE CLAIM OR CAUSE OF ACTION (WHETHER BASED IN CONTRACT, INFRINGEMENT, NEGLIGENCE, STRICT LIABILITY, OTHER TORT, OR OTHERWISE), SHALL SELLER'S LIABILITY TO BUYER AND/OR ITS CUSTOMERS EXCEED THE PRICE TO BUYER OF THE SPECIFIC GOODS MANUFACTURED OR SERVICES PROVIDED BY SELLER GIVING RISE TO THE CLAIM OR CAUSE OF ACTION. BUYER AGREES THAT IN NO EVENT SHALL SELLER'S LIABILITY TO BUYER AND/OR ITS CUSTOMERS EXTEND TO INCLUDE INCIDENTAL, CONSEQUENTIAL OR PUNITIVE DAMAGES. THE TERM “CONSEQUENTIAL DAMAGES” SHALL INCLUDE, BUT NOT BE LIMITED TO, LOSS OF ANTICIPATED PROFITS, LOSS OF USE, LOSS OF REVENUE, AND COST OF CAPITAL.

Contents

Chapter 1 Start-up 7

Chapter 2 Description and specifications 9

2.1 Features and applications 9
2.2 General specifications 9
2.3 Rosemount 5081 - (A/P/C/T) product certifications 12
2.4 Functional specifications 15
2.5 Ordering information 17

Chapter 3 Install 19

3.1 Unpack and inspect 19
3.2 Installation guidelines 19
3.3 Orient the display board 20
3.4 Mount on a flat surface 21
3.5 Mount on a pipe 22

Chapter 4 Wire 25

4.1 Wiring overview 25
4.2 Power supply/current loop 25

Chapter 5 Display and operate 29

5.1 User interface and main display 29
5.2 Infrared remote control (IRC) 30
5.3 Menu system 31

Chapter 6 Programming basics 43

6.1 Programming 43
6.2 Test 4-20 mA outputs and current generated during hold and faults 43
6.3 Correct temperature 45
6.4 Set up a custom curve (conductivity measurements only) 46
6.5 Restore to factory default settings 47
6.6 Set access (security) code 47
6.7 Activate or deactivate HOLD 48

Chapter 7 Measurements 49

7.1 Calibrating pH sensors 49
7.2 Calibrating oxidation reduction potential (ORP) sensors 52
7.3 Calibrating contacting and toroidal conductivity sensors 54
7.4 Calibrating dissolved oxygen, ozone, free chlorine, total chlorine, and ozone sensors 56

Chapter 8 Diagnostics and troubleshooting 61

8.1 Warning and fault messages 61

8.2 pH/ORP diagnostics and troubleshooting....62
8.3 Contacting and toroidal conductivity diagnostics and troubleshooting....89
8.4 Chlorine, dissolved oxygen, and ozone diagnostics....100
8.5 Chlorine, dissolved oxygen, and ozone troubleshooting....103
8.6 Factory assistance and repairs....129

Chapter 9 Digital communications....131
9.1 HART® communications....131
9.2 FOUNDATION™ Fieldbus communication....132
9.3 Asset Management Solutions....134

Chapter 10 Return of material....137
10.1 General information....137
10.2 Warranty repair....137
10.3 Non-warranty repair....137

Appendix A Engineering Drawings....139

1 Start-up

Procedure

1. Using the infrared remote control (IRC), press **PROG**, **NEXT**, **NEXT**, and **ENTER** in this order.
2. Select the measurement type and unit of measurement.
3. Use the arrow keys to toggle between Celsius and Fahrenheit.
4. Press **ENTER** and then **RESET**.
5. Press **PROG**, **NEXT**, and **ENTER** in this order.
6. Use the arrow keys to toggle T AUTO between ON or OFF.

   This determines whether the transmitter uses the process temperature (ON) or a manual temperature (OFF).
7. Press **ENTER**.
8. If you select OFF, enter the manual temperature desired using the arrow keys.
9. Press **ENTER**.

2 Description and specifications

2.1 Features and applications

The Rosemount™ 5081 includes the following features:

General

The Rosemount 5081 explosion-proof transmitter is a loop powered device with a robust design that serves several industrial, commercial, and municipal applications. It offers a local operator interface (LOI) that can display values from a single measurement input. This transmitter is compatible with a multitude of analytical sensors.

Analytical measurements

- pH/ORP
- Contacting conductivity
- Toroidal conductivity
- Dissolved oxygen
- Ozone
- Chlorine

Maintenance features

- Automatic two-point buffer calibration routine
- Automatic recognition of resistance temperature device (RTD)
- Sensor diagnostics

Diagnostics

Continuous monitoring of sensor performance along with warnings and fault messages to alert the user of failures.

Enclosure

Explosion-proof and corrosion resistant

2.2 General specifications

Table 2-1: General Specifications

Housing	Cast aluminum with epoxy coating. NEMA® 4X(IP65) and NEMA7B. Neoprene O-ring seals.
Dimensions	6.3 x 6.9 x 6.4 in. (160.5 x 175.3 x 161.3 mm) See the engineering drawings in Engineering Drawings.
Conduit openings	¾-in. female national pipe thread (FNPT)
Ambient temperature	-4 to 149 °F (-20 to 65 °C)

Table 2-1: General Specifications *(continued)*

Storage temperature	-22 to 176 °F (-30 to 80 °C)
Relative humidity	0 to 95% (non-condensing)
Weight / shipping weight	10 lb./11 lb. (4.5 kg/5.0 kg)
Display	First line: 7 segment LCD, 0.8 in. (20 mm) high. This line shows process variables (pH/ORP, contacting conductivity, toroidal conductivity, etc.) Second line: 7 segment LCD, 0.3 in. (7 mm) high. This line shows process temperature, output current, warnings, faults, and messages during calibration/programming. Display board can be rotated 90 degrees clockwise or counterclockwise if desired.
Temperature resolution	0.1 °C
Hazardous location approval	For details, see Rosemount 5081 - (A/P/C/T) product certifications.
RFI/EMI	Meets all industrial requirements of EN61326.
Diagnostics (may slightly vary based on measurement type)	• Calibration error • Low temperature error • High temperature error • Sensor failure • Line failure • CPU failure • Calibration error • Zero error • Temperature slope error • Sensor failure • ROM failure • Input warning Once one of the above warnings/faults are diagnosed, the LOI will display a message describing the failure detected.

Table 2-2: HART® Digital Communications

Power and load requirements	Supply voltage at the transmitter terminals should be at least 12 Vdc. Power supply voltage should cover the voltage drop on the cable plus the external load resistor required for HART communications (250 Ohms minimum). Minimum power voltage is 12 Vdc. Maximum power voltage is 42.4 Vdc (30 Vdc for intrinsically safe operation). Figure 4-1 shows the supply voltage required to maintain 12 Vdc (upper line) and 30 Vdc (lower line) at the transmitter terminals when the current is 22 mA.
Analog output	Two-wire, 4-20 mA output with superimposed HART digital signal, scalable over the operating range of the sensor.
Output accuracy	±0.05 mA

Table 2-2: HART® Digital Communications *(continued)*

Variables assignable to	• pH • Temperature • mV • Glass impedance • Reference impedance • RTD resistance • Oxidation reduction potential (ORP) • Conductivity • Resistivity • Concentration • Raw conductivity • Chlorine • Dissolved oxygen • Dissolved ozone

Table 2-3: FOUNDATION™ Fieldbus Digital Communications

Power and load requirements	A power supply voltage of 9-32 Vdc at 22 mA is required.
AI blocks assignable to	• pH • Temperature • mV • Glass impedance • Reference impedance • RTD resistance • ORP • Conductivity • Resistivity • Concentration • Raw conductivity • Chlorine • Dissolved oxygen • Dissolved ozone

2.3 Rosemount 5081 - (A/P/C/T) product certifications

Rev 1.0

2.3.1 European Directive Information

A copy of the EU Declaration of Conformity can be found at the end of the Quick Start Guide. The most recent revision of the EU Declaration of Conformity can be found at Emerson.com/Rosemount.

2.3.2 Ordinary Location Certification

As standard, the Power Module has been examined and tested to determine that the design meets the basic electrical, mechanical, and fire protection requirements by a nationally recognized test laboratory (NRTL) as accredited by the Federal Occupational Safety and Health Administration (OSHA).

2.3.3 Installing equipment in North America

The US National Electrical Code® (NEC) and the Canadian Electrical Code (CEC) permit the use of Division marked equipment in Zones and Zone marked equipment in Divisions. The marking must be suitable for the area classification, gas, and temperature class. This information is clearly defined in the respective codes.

2.3.4 USA

FM hazardous locations

Certificate	FM17US0021X
Standards	FM Class 3600:2011, FM Class 3610:2015, FM Class 3611:2016 FM Class 3615:2006, FM Class 3810:2005, ANSI/NEMA 250:1991
Markings	FM APPROVED Intrinsically safe for use in Class I, II, and III, Division 1, Groups A, B, C, D, E, F, and G; T4 Ta = -20 °C to 70 °C; per control drawing numbers 1400676; 1400677 Nonincendive for Class I, Division 2, Groups A, B, C, and D; T4 Ta = -20 °C to 70 °C; per control drawing numbers 1400676; 1400677 Dust-ignitionproof for use in Class II and Class III, Division 1, Groups E, F, and G; T6 Ta = -20 °C to 70 °C;per control drawing number 1400678 Explosionproof for use in Class I, Div 1, Groups B, C, and D; T6 Ta = -20 °C to 70 °C; per control drawing number 1400678 Type 4X

Special Conditions for Safe Use (X):

1. The Rosemount 5081-T conductivity transmitters shall only be used with the Rosemount 222, 225, 226, 228 (1 in. and 2 in. only) and 245 toroidal sensors.

2.3.5 Canada

CSA hazardous locations

Certificate	1132747
Standards	C22.2 No. 0-M1987, C22.2 No. 25-1966, C22.2 No. 30-M1986 C22.2 No. 94-M91, C22.2 No 142-M1987, C22.2 No. 157-92, C22.2 No. 213-M1987
Markings	Intrinsically safe for Class I Groups A, B, C, and D; Class II Groups E, F, and G; Class III; T4 Tamb = 70 °C, per installation drawing 1400674 and 1400675 Non-incendive for Class I, Div. 2 for Groups A, B, C, and D; Class II, Div. 2, Groups F and G; Class III; T4 Tamb = 70 °C, per installation drawing 1400674 and 1400675 (Rosemount 5081-A/P/C/T) and per 1700462 (Rosemount 5081-T) Explosion-proof for Class I, Groups B, C, and D; Class II, Groups E, F, and G, Class III, T6 Tamb = 70 °C Type 4X

2.3.6 Europe

Rosemount 5081-A and 5081-P liquid transmitters

ATEX

Certificate	BAS02ATEX1284X
Standards	EN 60079-0:2012+A11:2013 EN 60079-11:2012
Markings	II 1 G Ex ia IIC T4 Ga (-20 °C ≤ Ta ≤ +65 °C)

Special Conditions for Safe Use (X):

1. The Rosemount 5081 enclosure may be made of aluminum alloy and given a protective polyurethane paint finish; however, care should be taken to protect it from impact or abrasion of located in a zone 0.

Rosemount 5081-C liquid transmitter

ATEX

Certificate	Baseefa03ATEX0099X
Standards	EN 60079-0:2012+A11:2013 EN 60079-11:2012

Markings	 II 1 G Ex ia IIC T4 Ga (-20 °C ≤ Ta ≤ +65 °C)

Special Conditions for Safe Use (X):

1. The equipment enclosure may contain light metals. The equipment must be installed in such a manner as to minimize the risk of impact or friction with other metal surfaces.

Rosemount 5081-T liquid transmitter

ATEX

Certificate	Baseefa03ATEX0399X
Standards	EN 60079-0:2012+A11:2013 EN 60079-11:2012
Markings	 II 1 G Ex ia IIC T4 Ga (-20 °C ≤ Ta ≤ +65°C)

Special Conditions for Safe Use (X):

1. The equipment may contain light metals. The equipment must be installed in such a manner as to minimize the risk or impact or friction with other metal surfaces.

2.3.7 International

IECEx

Certificate	IECEx BAS 09.0159X
Standards	IEC 60079-0:2011 IEC 60079-11:2011
Markings	Ex ia IIC T4 Ga (-20 °C ≤ Ta ≤ +65°C)

Special Conditions for Safe Use (X):

1. The Rosemount 5081 enclosure may be made of aluminum alloy and given a protective polyurethane paint finish; however, care should be taken to protect it from impact or abrasion if located in a zone 0 environment.

2.4 Functional specifications

The sections below display the specifications for measuring different substances with the Rosemount 5081.

2.4.1 pH/ORP specifications

pH range	0 to 14
ORP range	-1400 to +1400 mV
Calibration/standardization	The automatic buffer recognition uses stored buffer values and their temperature curves for the most common buffer standards available worldwide. The transmitter also performs a stabilization check on the sensor in each buffer. To make a manual two-point calibration, immerse the sensor in two different buffer solutions and enter the pH values. The microprocessor automatically calculates the slope which is used for self-diagnostics. The transmitter displays an error message if the pH sensor is faulty. The operator can read the slope on the display and/or manually adjust it if desired. To complete an on-line, one-point standardization process, enter the pH or ORP value of a grab sample as measured by a lab reference.
Preamplifier location	Use a preamplifier to convert the high impedance pH electrode signal to a low impedance signal for transmitter use. Use the transmitter's integral preamplifier when the sensor to transmitter distance is less than 15 ft. (4.5 m). Use a sensor with a built-in preamplifier or a junction box if distance is longer than 15 ft. (4.5 m).
Automatic temperature compensation	External 3 or 4 wire Pt 100 resistance temperature device (RTD) or Pt 1000 RTD, located in the sensor, compensates the pH reading for temperature fluctuations. Compensation covers the range 5 to 270 °F (-15 to 130 °C). The operator may also select manual temperature compensation.
Accuracy	±01 mv at 77 °F (25 °C) ± 0.01 pH
Repeatability	±01 mv at 77 °F (25 °C) ±0.01 pH
Stability	0.25% / year at 77 °F (25 °C)

2.4.2 Contacting conductivity specifications

Measured range	0-20,000 µS/cm
Calibration	To calibrate, immerse the sensor in a known solution and enter its value or enter the cell constant for ultra-pure applications.
Automatic temperature compensation	3-wire Pt 100 or Pt 1000 resistance temperature device (RTD) Conductivity: 32 to 392 °F (0 to 200 °C) Resistivity: 32 to 212 °F (0 to 100 °C) Low conductivity: 32 to 212 °F (0 to 100 °C)
Accuracy	± 0.5% of reading and ±0.001 µS/cm

Repeatability	± 0.25% of reading
Stability	0.25% of output range/month, non-cumulative
Ambient temperature coefficient	± 0.05% of reading/°C
Temperature slope adjustment	0 to 5%/°C
Other temperature compensation algorithms	Ultra-pure water compensation Cation conductivity Raw (uncompensated) conductivity
Compatible RTD	100 Ohm or 1000 Ohm with automatic recognition

2.4.3 Toroidal conductivity specifications

Measured range	50 to 2,000,000 µS/cm
Calibration	To calibrate, immerse the sensor in a known solution and enter its value.
Automatic temperature compensation	3-wire Pt 100 resistance temperature device (RTD) Conductivity: 32 to 392 °F (0 to 200 °C) % concentration: 32 to 212 °F (0 to 100 °C)
Accuracy	±1.0% of reading
Repeatability	±0.25% of reading
Stability	0.25% of output range/month, non-cumulative
Ambient temperature coefficient	±0.2% of FS/°C
Temperature slope adjustment	0 to 5% / °C
% concentration ranges	Sodium hydroxide: 0 to 15% Hydrochloric acid: 0 to 16% Sulfuric acid: 0 to 25% and 96 to 99.7%

2.4.4 Dissolved oxygen specifications

Measurement range	0 - 99 ppm (mg/L), 0 - 200 saturation
Resolution	0.01 ppm, 0.1 ppb for Rosemount 499ATrDO sensor
Temperature correction for membrane permeability	Automatic between 32 and 122 °F (0 and 50 °C). Can be disabled.
Calibration	Air calibration (user must enter barometric pressure) or calibration against a standard instrument

2.4.5 Free chlorine specifications

Measurement range	0-20 ppm (mg/L) as Cl_2
Resolution	0.001 ppm (auto-ranges at 0.999 to 1.00 and 9.99 to 10.0)
Temperature correction for membrane permeability	Automatic between 32 and 122 °F (0 and 50 °C). Can be disabled.

pH correction	Automatic between pH 6.0 and 9.5. Manual pH correction is also available.
Calibration	Calibrate against grab sample with portable test kit.

2.4.6 Total chlorine specifications

Measurement range	0-20 ppm (mg/L) as Cl_2
Resolution	0.001 ppm (auto-ranges at 0.999 to 1.00 and 9.99 to 10.0)
Temperature correction for membrane permeability	Automatic between 41 and 95 °F (5 and 35 °C). Can be disabled.
Calibration	Calibrate against grab sample with portable test kit.

2.4.7 Ozone specifications

Measurement range	0-10 ppm (mg/L)
Resolution	0.001 ppm (auto-ranges at 0.999 to 1.00 and 9.99 to 10.0)
Temperature correction for membrane permeability	Automatic between 41 and 95 °F (5 and 35 °C). Can be disabled.
Calibration	Against grab sample analyzed using portable test kit.

2.4.8 Percent oxygen in gas

Measurement range	0 - 25% oxygen
Resolution	0.1% - TBD
Calibration	Air calibration (automatic measurement of barometric pressure with internal pressure sensor)
Sample pressure	0 to 50 psig
Sample temperature	32 to 110 °F (0 to 43 °C)

2.5 Ordering information

The Rosemount 5081 two-wire transmitter is intended for the determination of pH/ORP, conductivity (both contacting and toroidal), and for measurements using membrane-covered amperometric sensors (oxygen, ozone, and chlorine). For free chlorine measurements, which often require continuous pH correction, a second input for a pH sensor is available. Use a hand-held infrared remote controller to locally configure and calibrate the transmitter.

Rosemount 5081	**Smart two-wire microprocessor transmitter**
Option	**Description**
P	pH/ORP
C	Contacting conductivity

T	Toroidal conductivity
A	Amperometric (oxygen, ozone, and chlorine)
Option	**Description**
HT	Analog 4-20 mA output with superimposed HART® digital signal
FF	FOUNDATION™ Fieldbus digital output
FI	FOUNDATION Fieldbus digital input with FISCO
Option	**Description**
20	Infrared remote controller included
21	Infrared remote controller not included
Option	**Description**
60	No approval
67	FM approved intrinsically safe, non-incendive (when used with appropriate sensor and safety barrier), and explosion-proof
69	CSA approved intrinsically safe, non-incendive (when used with appropriate sensor and safety barrier), and explosion-proof
73	ATEX/IECEx approved intriniscally safe (when used with appropriate sensor and safety barrier)
Example	**5081-P-HT-20-67**

3 Install

3.1 Unpack and inspect

To unpack the instrument:

Procedure

1. Inspect the shipping container(s). If there is damage, contact the shipper immediately for instructions.
2. If there is no apparent damage, unpack the container(s).
3. Ensure that all items shown on the packing list are present.
   If items are missing, contact your local Customer Care representative
4. Save the shipping container and packaging.
   They can be used to return the instrument to the factory in case of damage.

3.2 Installation guidelines

1. The transmitter tolerates harsh environments. For best results, install the transmitter in an area where temperature extremes, vibrations, and electromagnetic and radio frequency interference are minimized or absent.
2. To prevent unintentional exposure of the transmitter circuitry to the plant environment, keep the security lock in place over the circuit end cap. To remove the circuit end cap, loosen the lock nut until the tab disengages from the cap end and then unscrew the cover.
3. The transmitter has two ¾-in. conduit openings, one on each side of the housing. Run sensor cable through the left side opening (as viewed from the wiring terminal end of the transmitter) and run power wiring through the right side opening.
4. Use water tight cable glands to keep moisture out of the transmitter.
5. If using conduit, plug and seal the connections at the transmitter housing to prevent moisture from getting inside the transmitter.

   ⚠ CAUTION

   Equipment damage

   Moisture accumulating in the transmitter housing can affect the performance of the transmitter and may void the warranty.

6. If the transmitter is installed some distance from the sensor, a remote junction box with preamplifier in the junction box or in the sensor may be necessary. Consult the sensor reference manual for maximum cable lengths.

3.3 Orient the display board

The display board can be rotated 90 degrees, clockwise or counterclockwise, from the original position. To reposition the display:

Procedure

1. Loosen the cover lock nut until the tab disengages from the circuit end cap. Unscrew the cap.
2. Remove the three bolts holding the circuit board stack.
3. Lift and rotate the display board 90 degrees, clockwise or counterclockwise, into the desired position.
4. Position the display board on the stand offs. Replace and tighten the bolts.
5. Replace the circuit end cap.

3.4 Mount on a flat surface

Figure 3-1: Mounting Transmitter on a Flat Surface

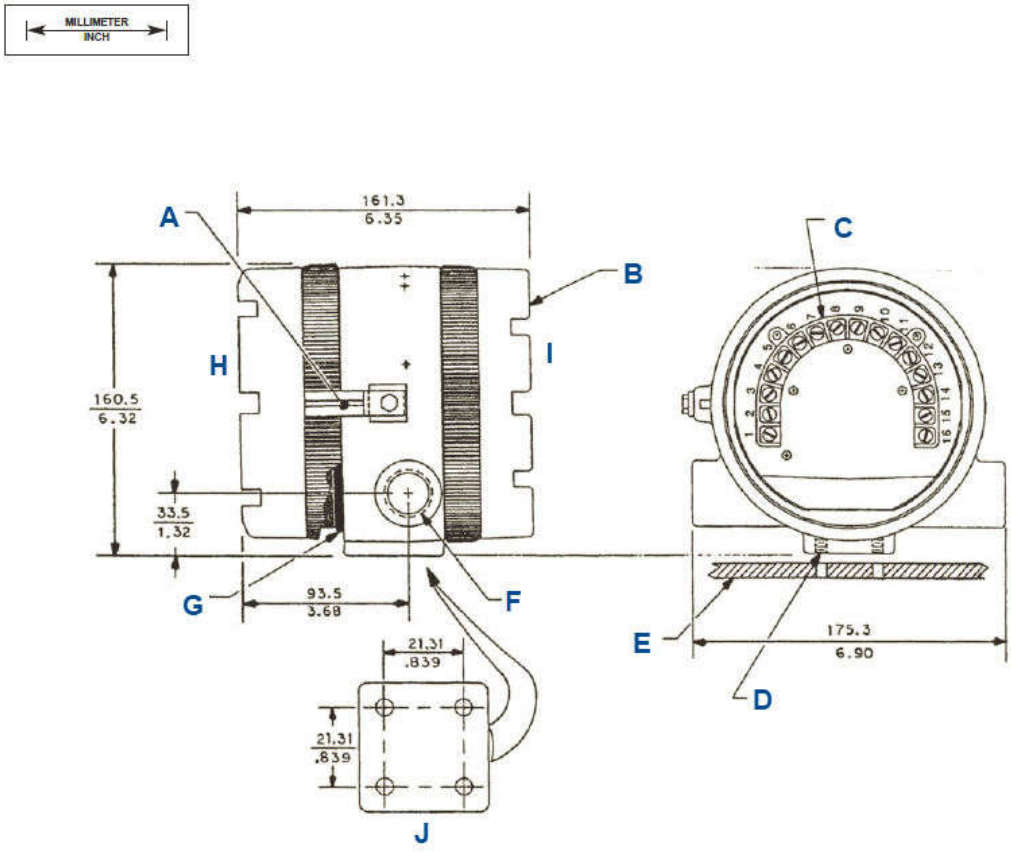

A. *Cover lock*
B. *Threaded cap (two places)*
C. *Terminal block (TB). Terminal end cap omitted for clarity this view.*
D. *¼-in. - 20 threads (four places)*
E. *Surface plate (by others)*
F. *O-ring (two places)*
G. *Circuit end*
H. *Terminal end*
I. *Flat surface mounting pad hole pattern*

3.5 Mount on a pipe

Use pipe mounting kit (23820-00 or 23820-01).

Figure 3-2: Mounting Transmitter on a Pipe

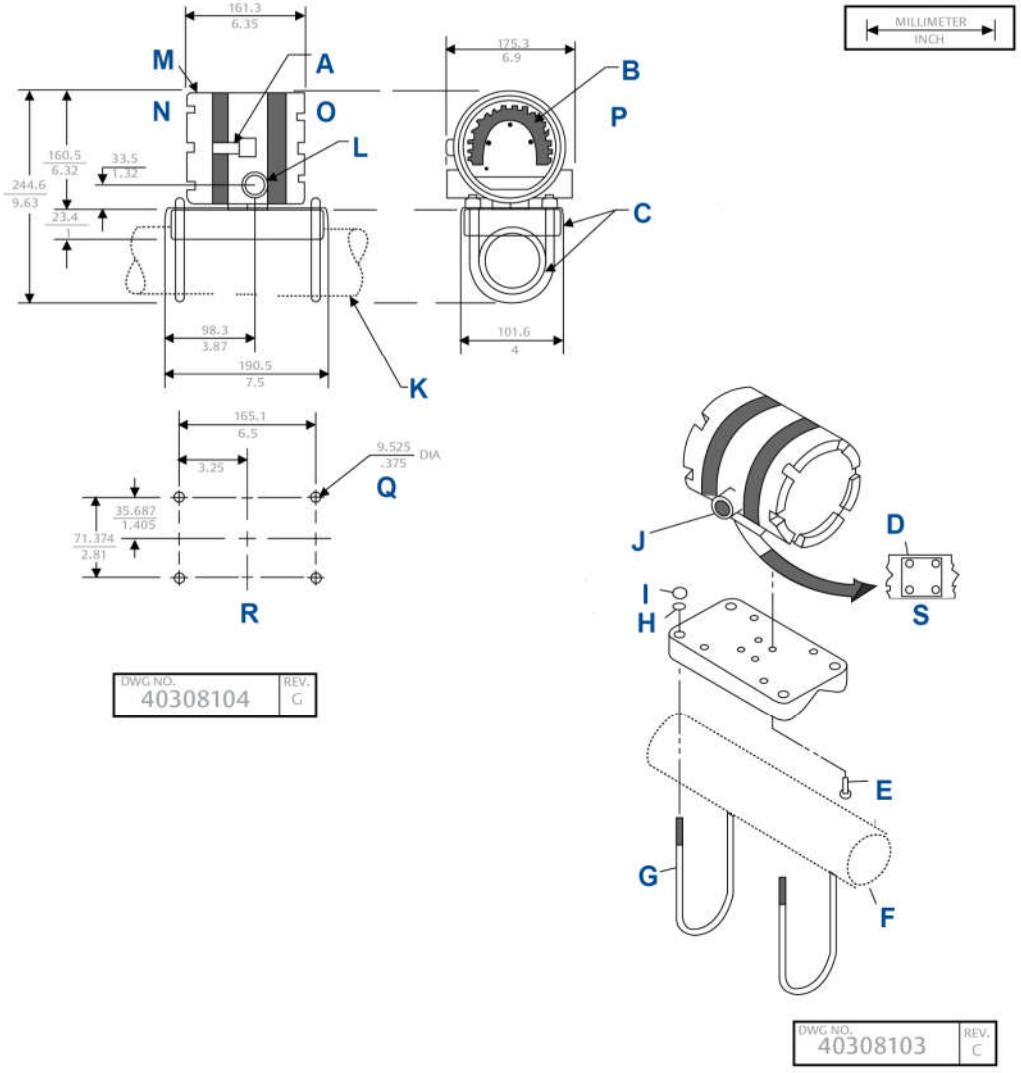

A. *Over look*
B. *Terminal block*
C. *Kit, 2-in. pipe/wall mounting bracket*
   Order PN2002577 as a separate item.
D. *½ - 20 threads*
E. *¼ - 20 screw*
   Screws furnished with mounting kit only. Not furnished with transmitter.
F. *1½-in. to 2-in. pipe (customer furnished)*
G. *U-bolt*

H. 5/16 washer
I. 6/18 - 18 nut
J. ¾ - 14 FNPT (two places)
K. 2-in. pipe supplied by customer
L. ¾ - 14 NPT (two places)
M. Threaded cap, two places
N. Circuit end
O. Terminal end
P. Terminal end cap omitted for clarity this view
Q. Four mounting holes
R. Bottom view

4 Wire

4.1 Wiring overview

To find wiring diagrams for specific sensors, check the wiring sections of the reference manuals for those particular sensors.

4.2 Power supply/current loop

4.2.1 Power supply overview

The tables below display the minimum and maximum voltages needed to operate the transmitter.

Minimum supply voltage at the transmitter terminals	12.0 Vdc
Minimum power supply for load resister	250 Ohms
Maximum power supply voltage	42.0 Vdc
Maximum power supply voltage for intrinsically safe installations	30.0 Vdc

Figure 4-1: Power Supply Voltage for HART® or without HART Communication Configurations

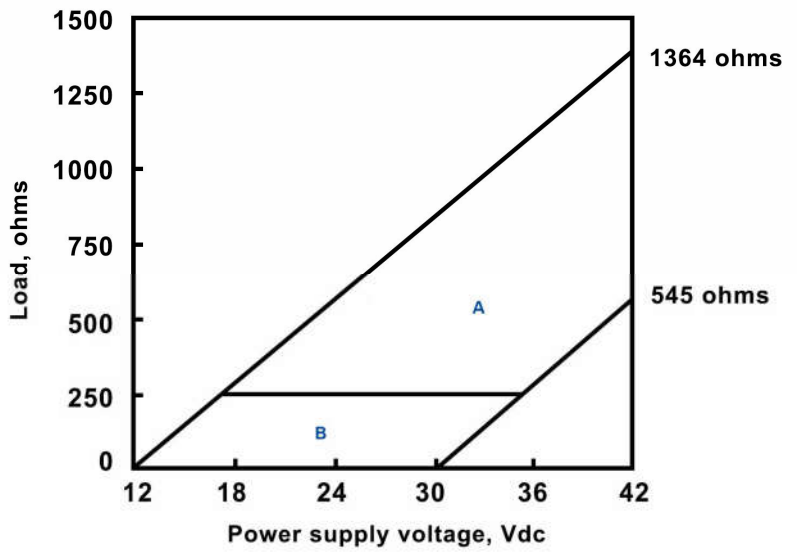

A. With HART communication
B. Without HART communication

Table 4-1: Values from Graph

Upper line	Power supply voltage needed to provide 12 Vdc at the transmitter terminals for a 22 mA current
Lower line	Power supply voltage needed to provide 30 Vdc for a 22 mA current
Maximum current	About 24 mA
Minimum load for digital communications	250 Ohms
Minimum power supply voltage to supply the 12.0 Vdc lift off voltage at the transmitter	17.5 Vdc

4.2.2 Wire to HART® or FOUNDATION™ Fieldbus communication protocol

Procedure

1. Run the power/signal wiring through the opening nearest terminals 15 and 16.
2. Use shielded cable and ground the shield to the power supply.
3. To ground the transmitter, attach the shield to the grounding screw on the inside of the transmitter case.

   You can also use a third wire to connect the transmitter to earth ground.

Note
For optimum EMI/RFI immunity, shield the power supply and enclose it in an earth ground metal conduit. Do not run power supply/signal wiring in the same conduit or cable tray with AC power lines or with relay actuated signal cables. Keep power supply/signal wiring at least 6 ft. (2 m) away from heavy electrical equipment. An additional 0-1 mA current loop is available between TB-14 and TB-15. A 1 mA current in this loop signifies a sensor fault. See Figure 4-2 for wiring instructions. See Diagnostics and troubleshooting for more information about sensor faults.

Figure 4-2: General Wiring Architecture

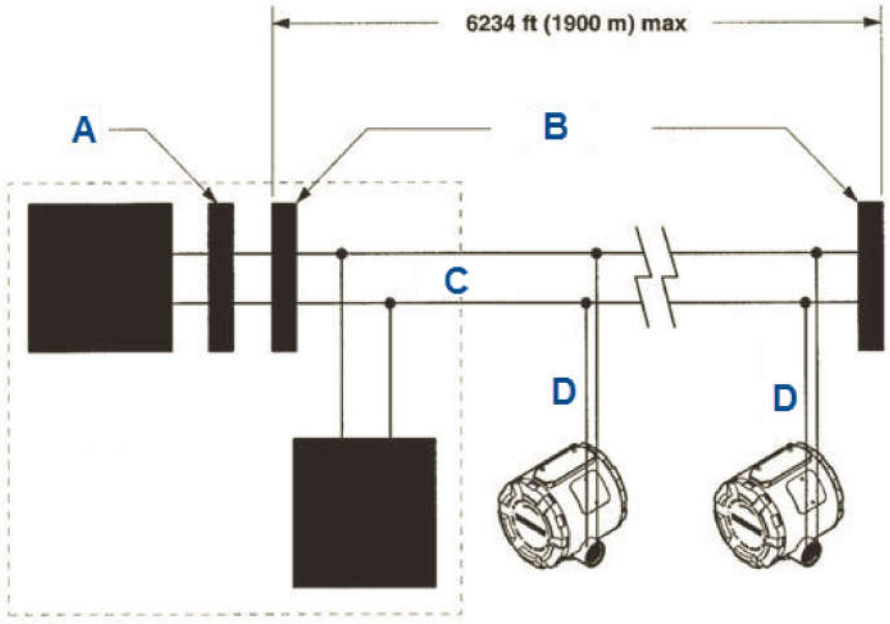

A. Filter
B. Terminators
C. Trunk
D. Spur

The power supply, filter, first terminator, and configuration device are typically located in the control room.

5 Display and operate

5.1 User interface and main display

The following are examples of the main (process) display screen (Figure 5-1) and the program display screen (Figure 5-2).

Figure 5-1: Main Display Screen

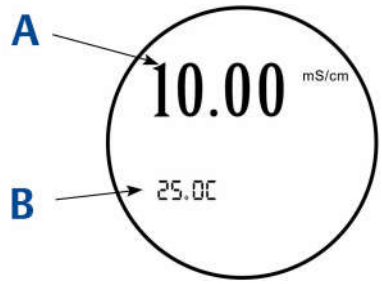

A. Conductivity value
B. Temperature in °C or °F

Figure 5-2: Program Display Screen

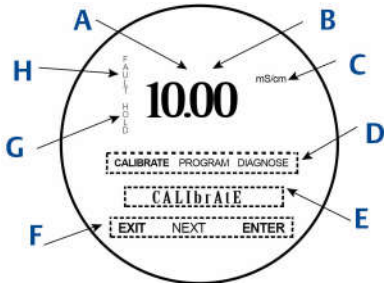

A. Indicates HART® or FOUNDATION™ Fieldbus digital communiciations
B. Conductivity value
C. Units of display
D. Active menu: CALIBRATE, PROGRAM, or DIAGNOSE
E. Sub-menus, prompts, and diagnostic messages appear here.
F. Available commands for sub-menus, prompts, or diagnostic messages
G. Appears when transmitter is in hold
H. Appears when a disabling condition has occurred

5.2 Infrared remote control (IRC)

Use the IRC to read diagnostics messages, calibrate connected sensors, and program the transmitter. Hold the IRC within 6 ft. (1.8 m) of the transmitter and less than 15 degrees from the horizontal of the display window.

Figure 5-3: Infrared Remote Control (IRC) Functions

1. **RESET** • End current operation and return to the main display. • Changes are not saved. • Does not return the transmitter to factory default settings.	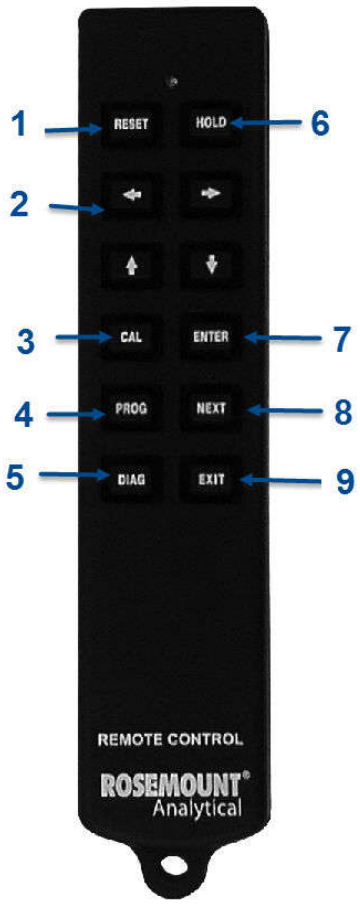	6. **HOLD** • Access to turn hold readings on or off.
2. Editing (arrow) keys • Change values of a flashing display. • Left and right arrows move the cursor by one digit. • Up and down arrows increase or decrease the values and navigate through the display options.		7. **ENTER** • Advance to the next prompt. • Store selected item. • Store value in memory.
3. **CAL** • Access to ***Calibration*** menu.		8. **NEXT** • Advance to the next sub-menu.
4. **PROG** • Access to ***Program*** menu.		9. **EXIT** • End current operation. • Return to the first prompt in the present sub-menu. • Changes are not saved.
5. **DIAG** • Access to diagnostics.		

Guidelines for using IRC

- Do not use harsh chemicals or abrasive brushes when cleaning the remote control.
- If the green LED does not light when you press a key, the issue is probably a weak battery. To restore operation, remove four screws to access and replace the two batteries. Observe the two warning messages posted at the rear of the remote control.
- Requires two 1.5 V AAA batteries. If used in hazardous areas, replacement batteries must be Energizer E92/EN92 or Duracell MN2400/PC2400.
- All functions for remote control PN 24479-00 are the same as those for the previous remote control, PN 23572-00.

5.3 Menu system

There are three main menus: ***Calibrate***, ***Program***, and ***Diagnose***. ***Calibrate*** and ***Program*** menus have additional sub-menus as shown in the figures below.

Table 5-1: Program Menu

Displayed item	Definition
OUtpUt	Current output menu header
4MA	4 mA current output (setpoint)
20MA	20 mA current output (setpoint)
HoLd	Current output on hold
FAULt	Fault condition current output setting
dPn	Current output dampening time
tESt	Current output test value
tAUtO	Automatic temperature compensation
tMAn	Manual temperature compensation
dISPLAY	Display menu header
tYP	Measurement type
tEMP	° C/° F toggle selection
OUtPUt	Current (mA) or percent of full scale display
COdE	Access code
OFFSt	Offset value

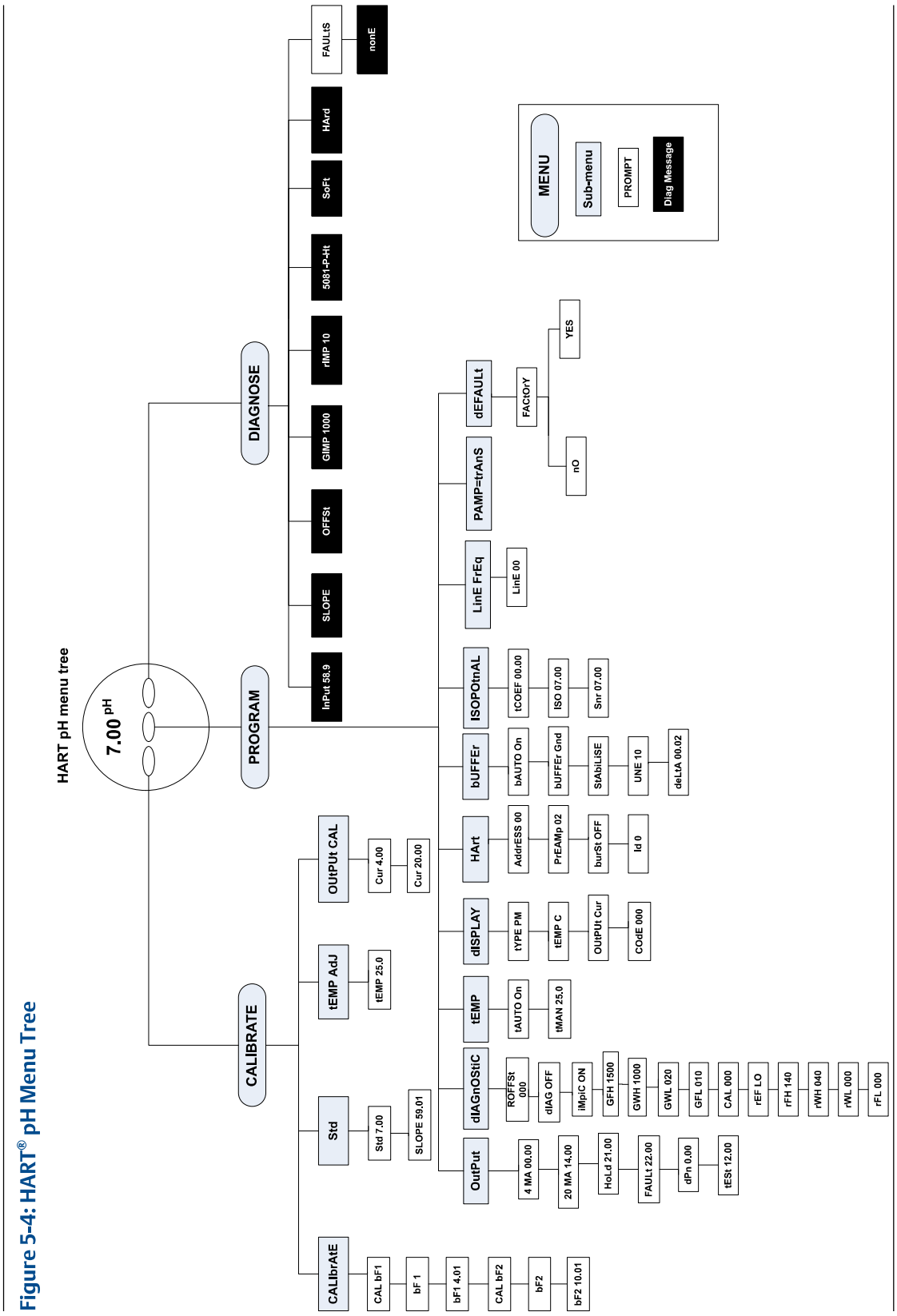

Figure 5-4: HART® pH Menu Tree

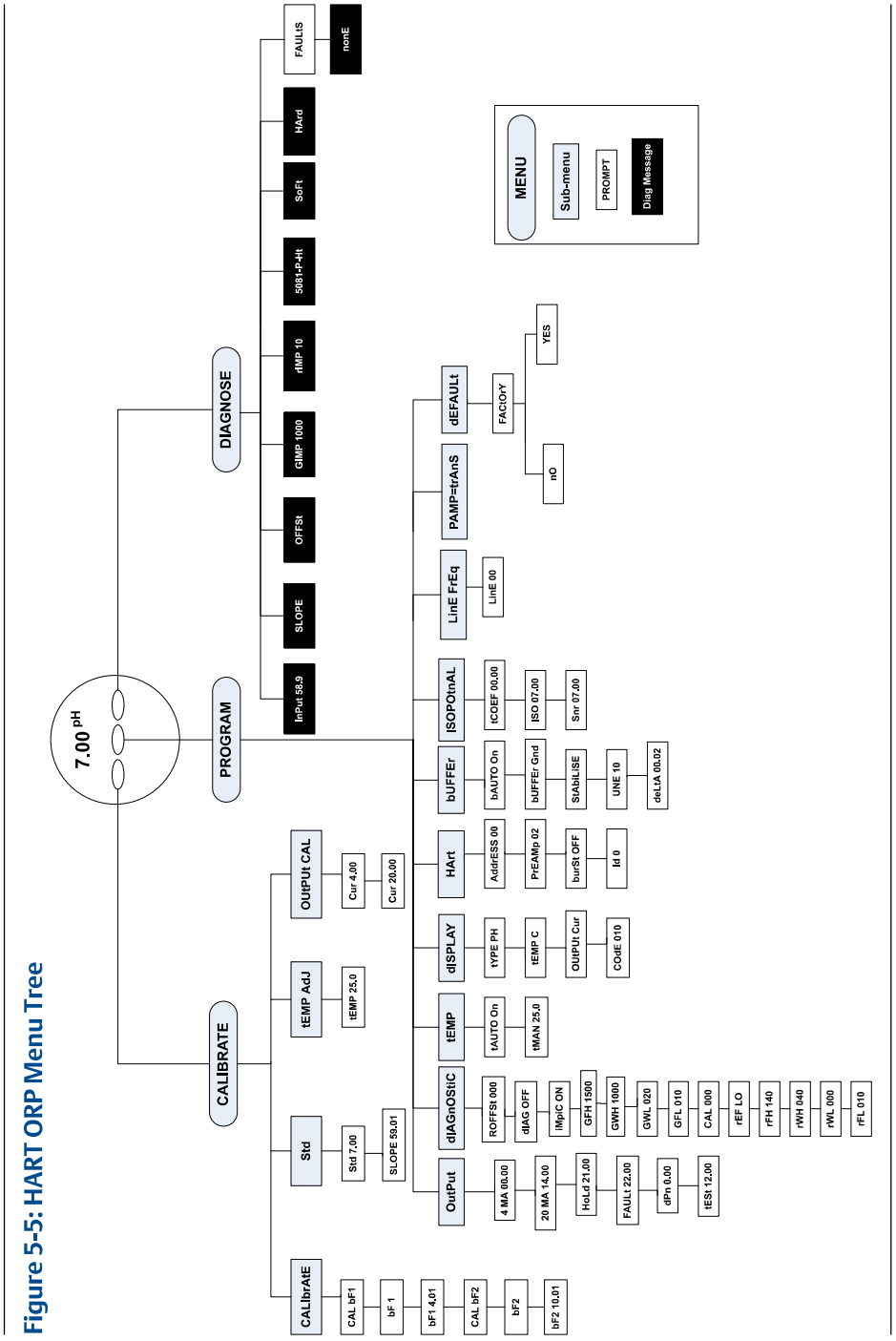

Figure 5-5: HART ORP Menu Tree

Figure 5-6: HART Contacting Conductivity Menu Tree

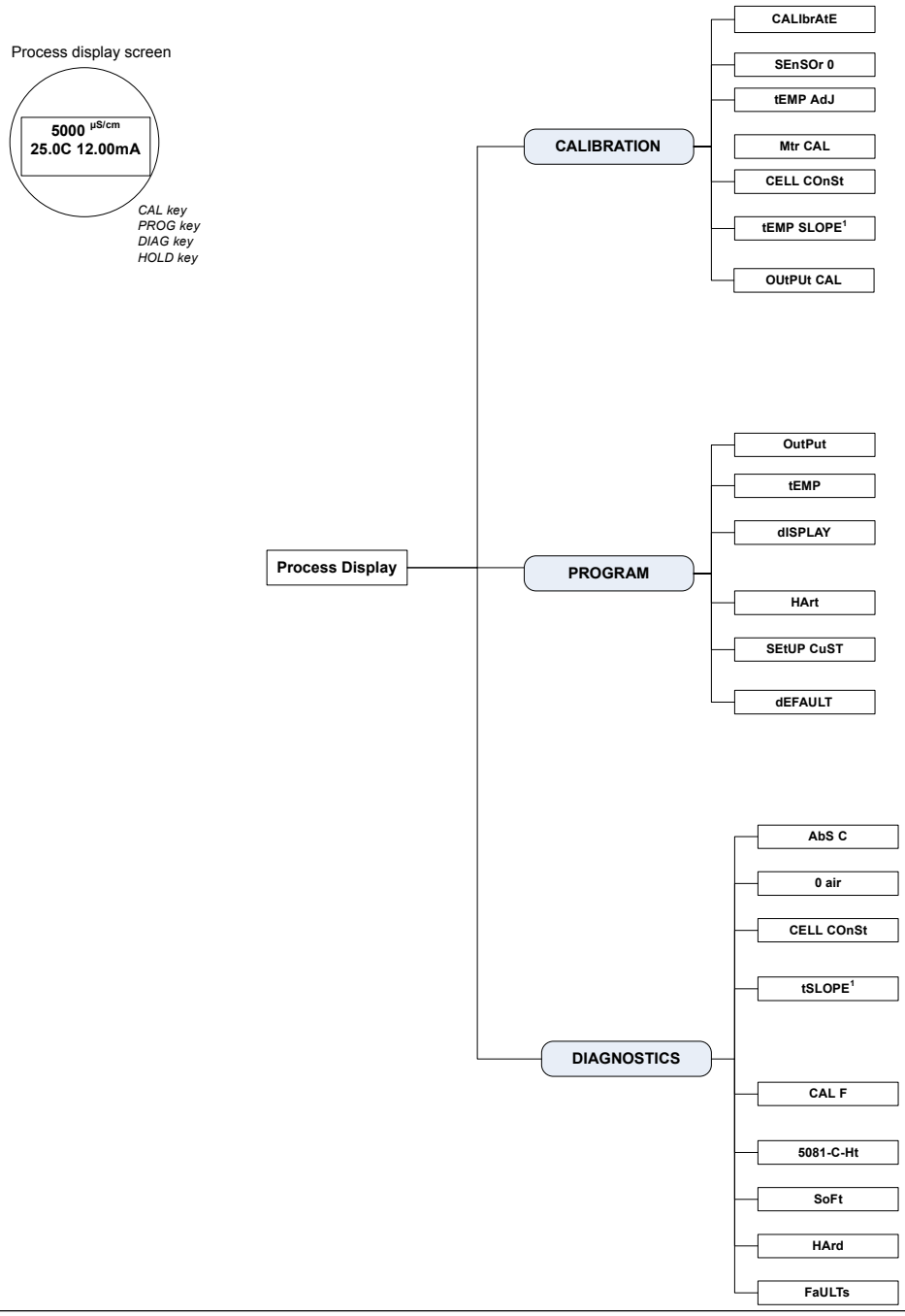

Figure 5-7: HART Toroidal Conductivity Menu Tree

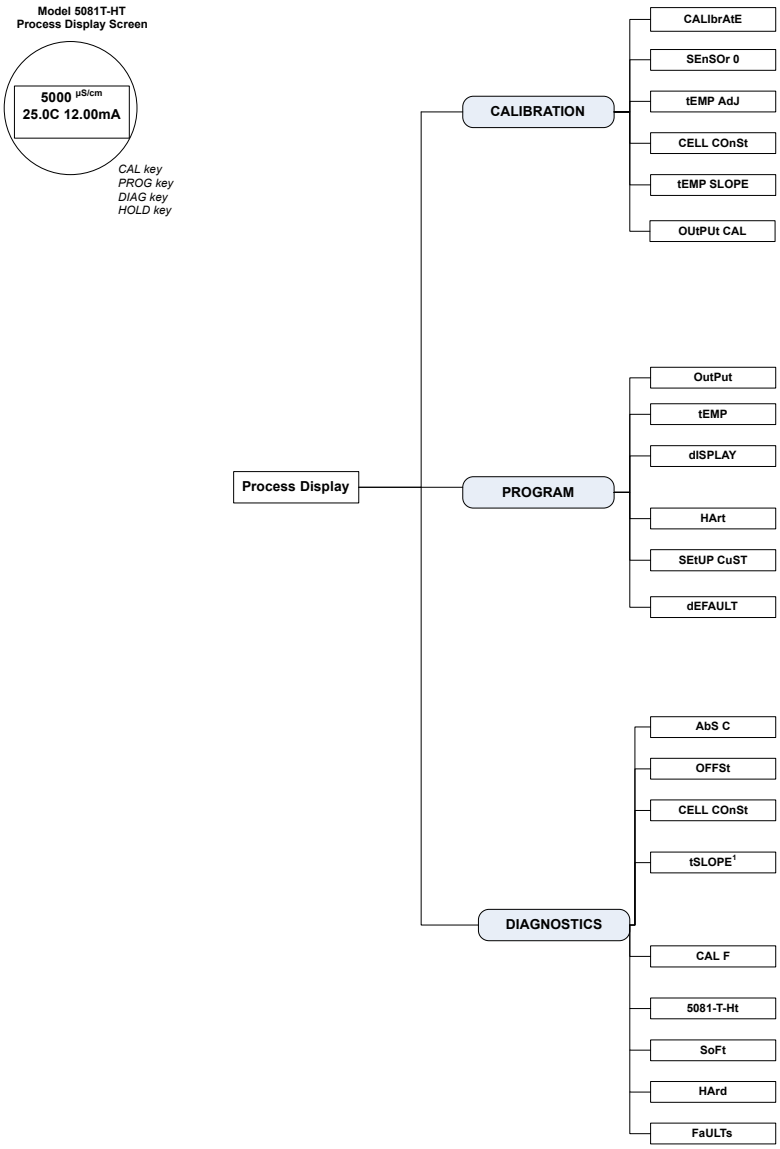

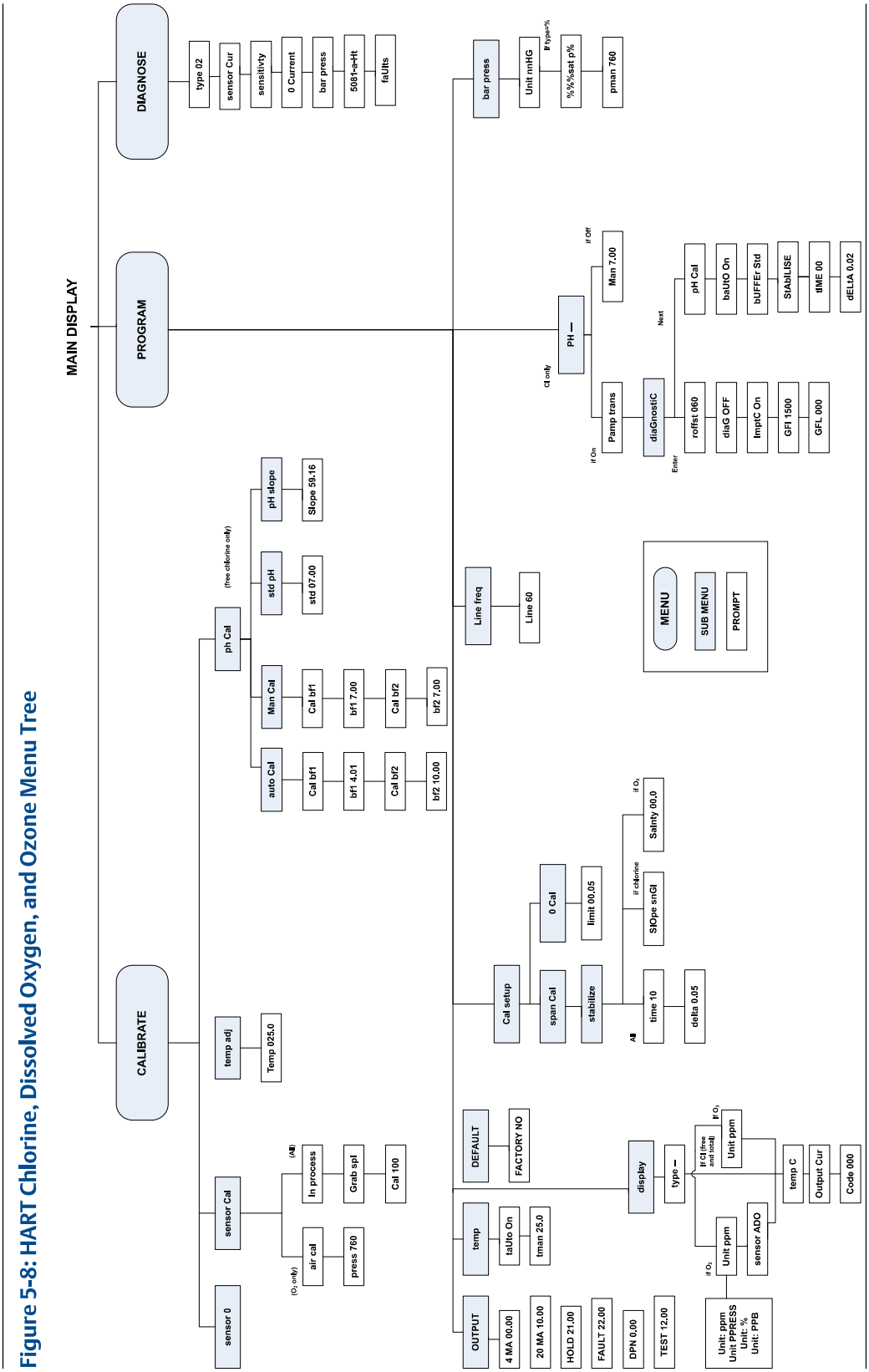

Figure 5-8: HART Chlorine, Dissolved Oxygen, and Ozone Menu Tree

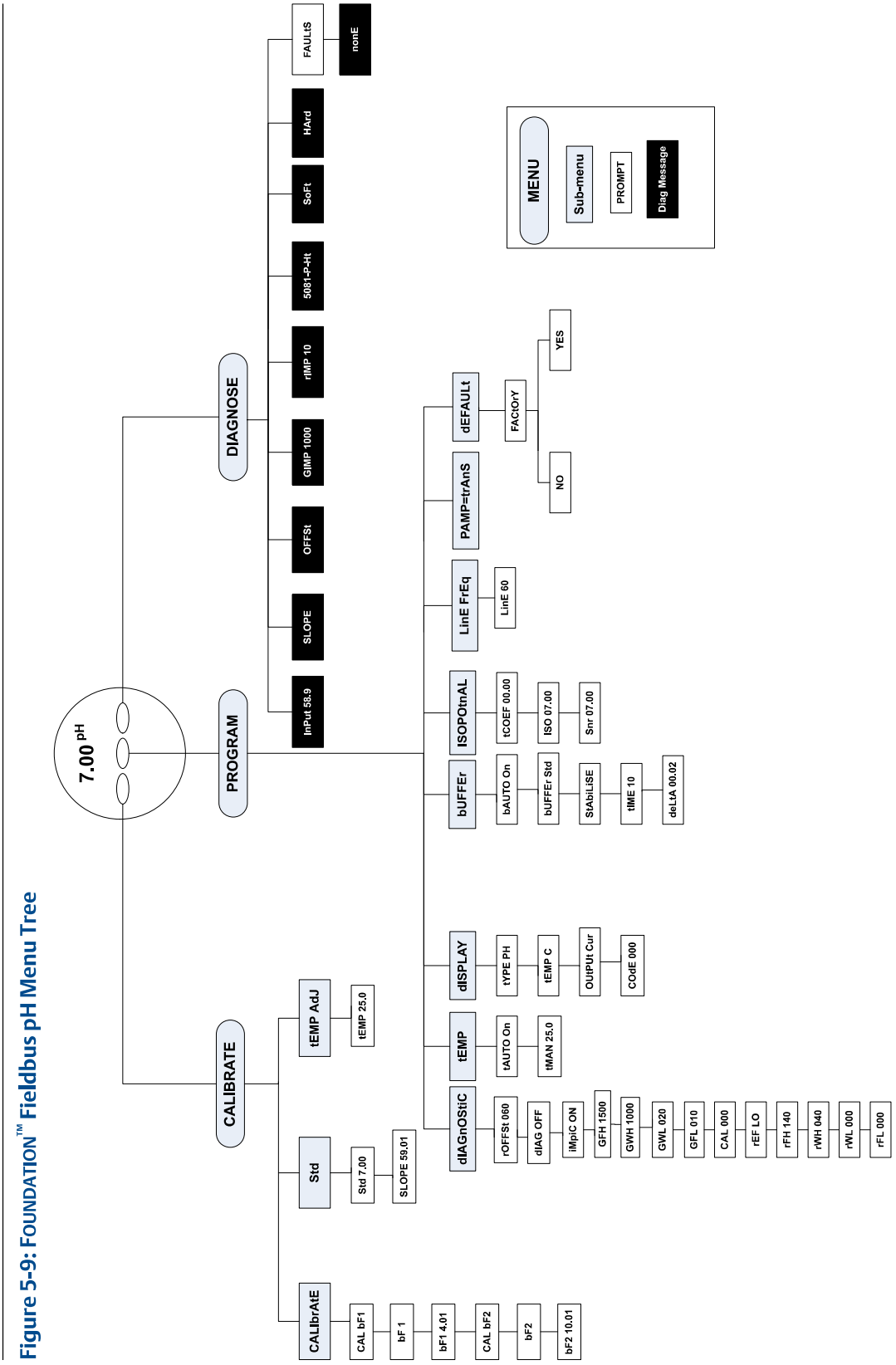

Figure 5-9: FOUNDATION™ Fieldbus pH Menu Tree

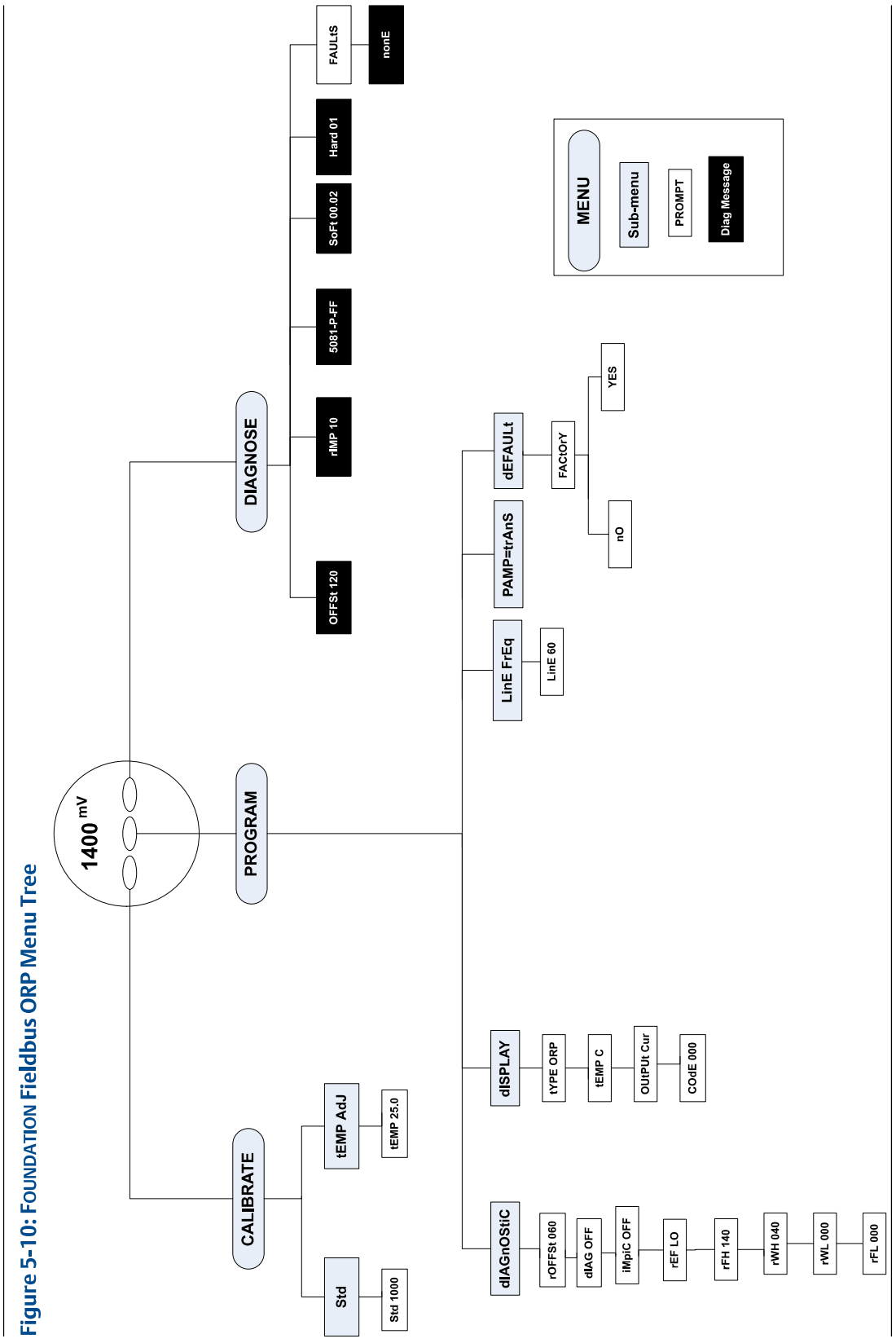

Figure 5-10: FOUNDATION Fieldbus ORP Menu Tree

Figure 5-11: FOUNDATION Fieldbus Contacting Conductivity Menu Tree

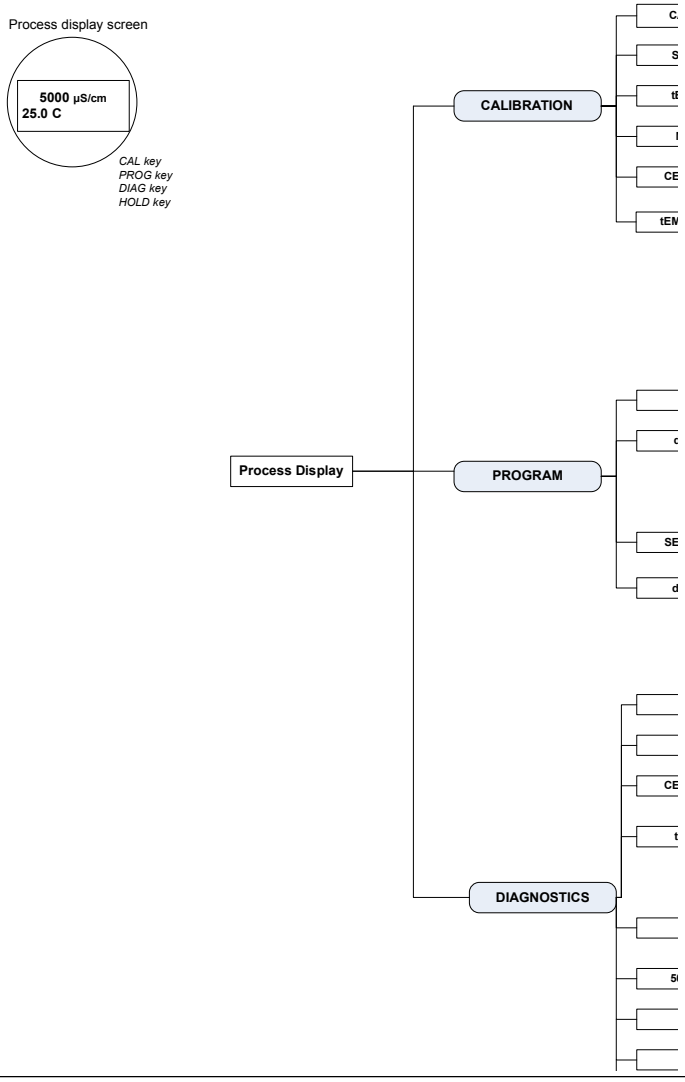

Figure 5-12: FOUNDATION Fieldbus Toroidal Conductivity Menu Tree

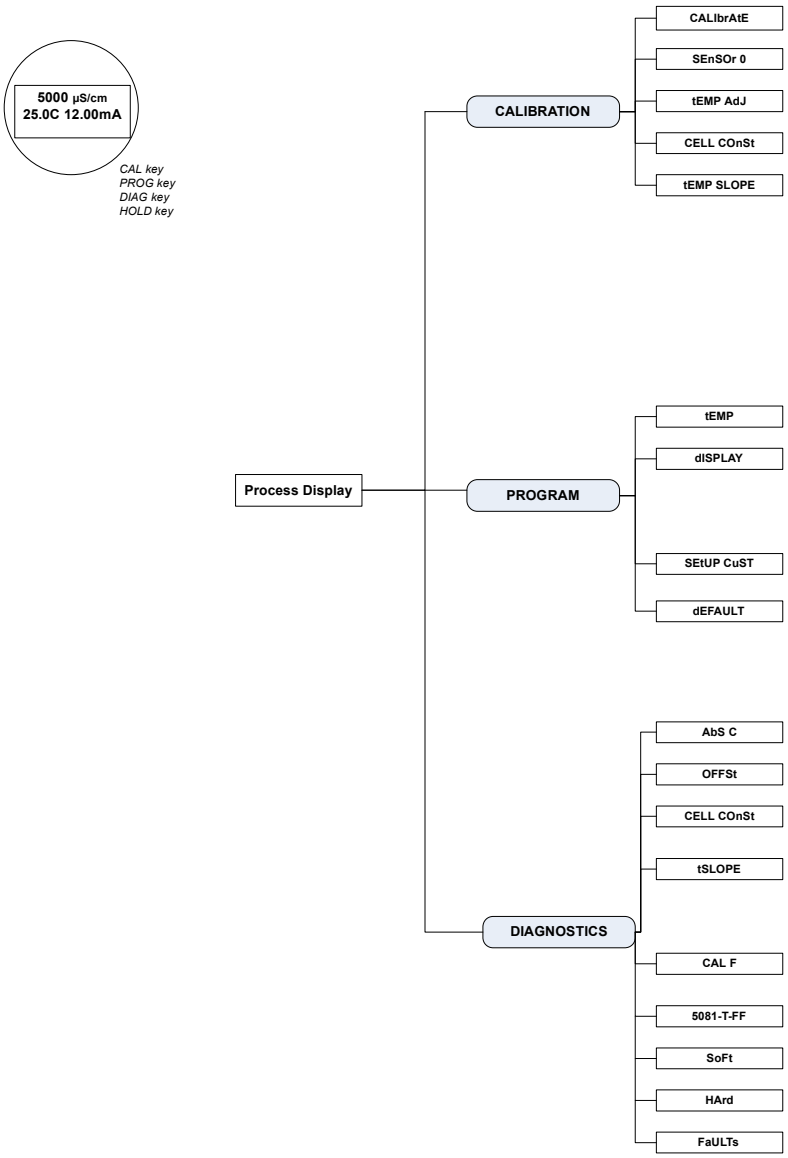

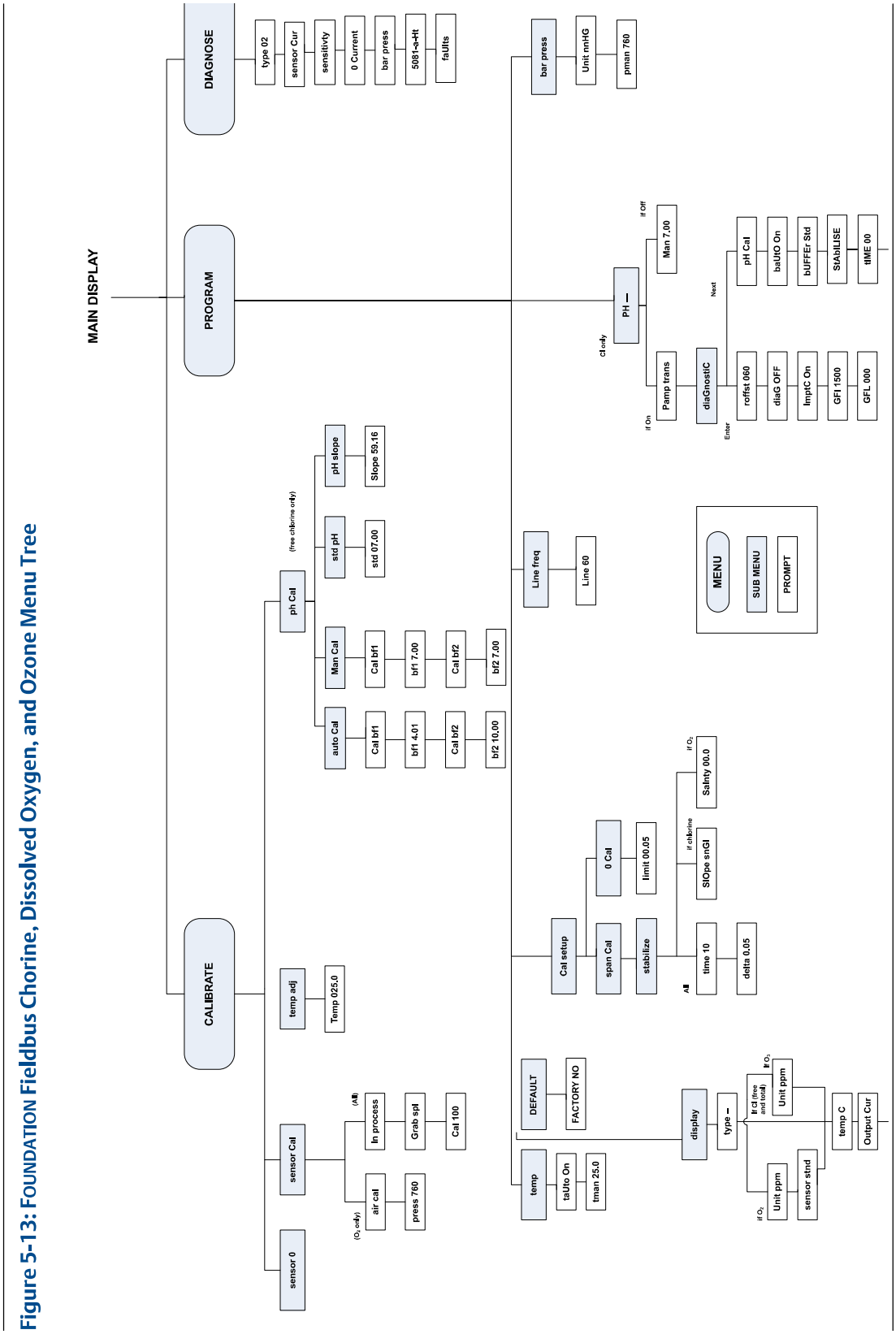

Figure 5-13: FOUNDATION Fieldbus Chorine, Dissolved Oxygen, and Ozone Menu Tree

6 Programming basics

6.1 Programming

The following can be programmed in the Rosemount™ 5081:

- 4-20 mA outputs
- Current generated by the transmitter during hold
- Current generated by the transmitter when fault is detected
- Automatic temperature correction (enable or disable)
- Type of measurement
- Measurement range
- Factory default setting

6.2 Test 4-20 mA outputs and current generated during hold and faults

Procedure

1. Press **PROG** on the remote controller.
   The *OUTPUT* submenu appears.

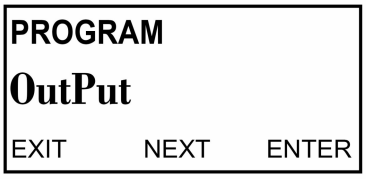

2. Press **ENTER**.
   The screen displays the `4mA` prompt.

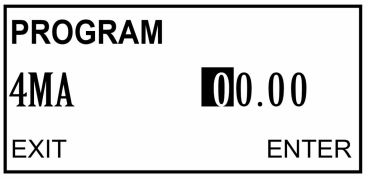

3. Use the arrow keys to change the setting. Press **ENTER** to save.
   The screen displays the `20mA` prompt.

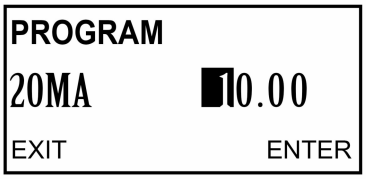

4. Use the arrow keys to change the setting. Press **ENTER** to save.
   The screen displays the `HOLD` prompt.

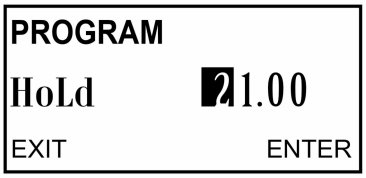

5. Use the arrow keys to change the setting to the output desired when the transmitter is in hold mode.

   The range is 3.80 to 22.0 mA. If you select 00.00, the transmitter will hold the output value.

6. Press **ENTER** to save.

Note
The hold setting overrides the fault setting.

   The screen displays the `FAULT` prompt.

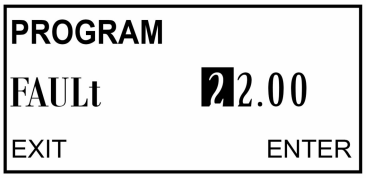

7. Use the arrow keys to change the setting to the output desired when the transmitter is in fault mode.

   The range is 3.80 to 22.0 mA. If you select 00.00, the transmitter will hold the output value.

8. Press **ENTER** to save.
   The screen displays the `DPN` prompt.

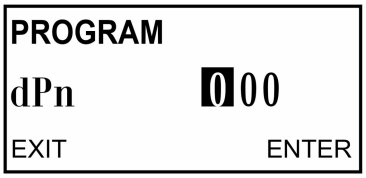

9. Use the arrow keys to change the setting.
   The range is 0 to 225.

10. Press **ENTER** to save.
    The screen displays the `TEST` prompt.

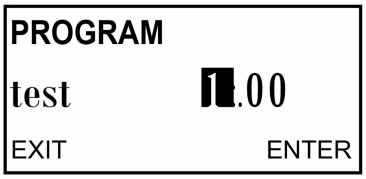

11. Use the arrow keys to enter the desired test current. Press **ENTER** to start the test. Press **EXIT** to end the test.
12. Press **RESET** to return to the main display.

6.3 Correct temperature

Procedure

1. Press **PROG**. Press **NEXT** until the ***TEMP*** submenu appears on the display.

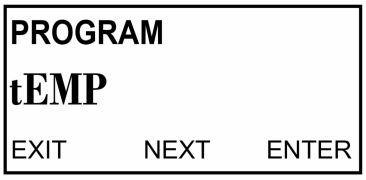

2. Press **ENTER**.
   The screen displays the `T AUTO` prompt.

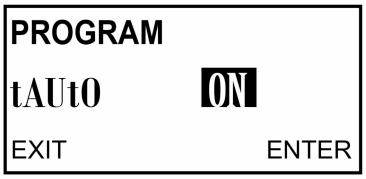

3. Use the up or down arrow keys to enable (ON) or disable (OFF) the automatic temperature correction feature. Press **ENTER** to save.
   The screen displays the `T MAN` prompt.

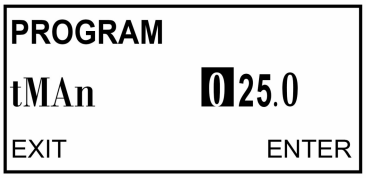

4. Use the arrow keys to change to the desired temperature.

   To enter negative numbers, press the left or the right arrow key until no digit is flashing. then press the up or down arrow keys to display the negative sign. The range is 23 to 266 ° F (-5.0 to 130 °C).

5. Press **ENTER** to save. Press **RESET** to return to the main display.

Note
If you disabled T AUTO in Step 3, then the transmitter will use the temperature entered in this step in all subsequent measurements, no matter the actual process temperature.

6.4 Set up a custom curve (conductivity measurements only)

Use custom curves to correlate conductivity to concentration of the measured liquid. The Rosemount 5081 has programmable custom curves that can create a curve (second order) from three to five user supplied points. If it only uses two points, then then the transmitter creates a linear curve (straight lin). In order for the curve to be accurate, take the data points from the liquid having the same reference temperature.

To obtain best results, select data points that are representative of the typical operating range and have at least 5% difference in conductivity values. Observe the graph of conductivity vs. concentration for the particular liquid to ensure that unsuitable points are avoided. Unsuitable points include conductivity values with two concentrations associated with them. In addition to unsuitable points, record any critical points - points that best describe the curve. Following these general guidelines will provide optimal results.

Enter the first point (COND 1) at the normal operating condition. Then enter other points above and below COND 1. Nonlinear conductivity curves require additional data points to characterize these regions. Do not use the same data point more than once and only use actual data (do not interpolate data points).

Note
The default values for the custom curve are three data points, reference temperature of 77 °F (25 °C), and a linear temperature slope of two percent/°C. This combination will yield the best results in most applications. If the normal temperature is over 104 °F (40 °C) or under 50 °F (10 °C), change the reference temperature to the normal process temperature. If known, use the temperature slope at the reference temperature.

Procedure

1. From the main menu, select PROG and then press **NEXT** four times.
   `SETUP CUST` appears.
2. Press **ENTER**.
   `T REF` appears.
3. If needed, change the reference temperature from the factory default 77 °F (25 °C) to a different reference temperature for the process. Press **ENTER**.
   `UNIT` appears.
4. Press the up or down arrow to select the desired measurement units: `µS` (microsiemens), `mS` (millisiemens), `none` (no units displayed), `%` (percent), or `ppm` (parts per million); then press **ENTER**.
   `NUM PTS` appears.

5. Press up or down arrows to select the desired number of data points for a custom conductivity curve. Select `2` to generate a linear relationship for conductivity and concentration at the given temperature.
   a) Enter the concentration for point 1 (displayed as `µS 1`). Press **ENTER**.
   b) Enter the known conductivity for point 1 in µS/cm. Press **ENTER**.
   c) Complete this process for additional known data points. Press **ENTER**.
   `CALC CUST` appears briefly.
   d) Press **ENTER**.
   `PROCESSING` appears briefly; then `APPLY CUST` appears.
   e) Press **ENTER** to register the custom curve into memory and return to the ***SETUP CUST*** screen.

The custom curve will now be used to display and output all conductivity measurement when the operator selects `CUST` as the measurement type in the ***Display*** menu.

6.5 Restore to factory default settings

The operator can erase user-defined configurations to return the transmitter to the factory default settings.

Procedure

1. Press **PROG** on the remote controller.
2. Press **NEXT** until `DEFAULT` appears in the display. Press **ENTER**.
3. Use the up and down arrows to toggle between NO and YES. Press **ENTER** to return to the factory default settings.

6.6 Set access (security) code

6.6.1 Security overview

The access (security) code prevents program and calibration settings from accidental changes. Emerson ships the transmitter with the access (security) code disabled.

6.6.2 Enter the access (security) code

Procedure

1. If calibration and program settings are protected with a security code, press **PROG** or **CAL** on the infrared remote controller.
   The ***ID*** screen appears.
2. Use the editing keys to enter the code. Press **ENTER**.
   If the code is correct, the first sub-menu appears. If the security code is incorrect, the process display reappears.

6.6.3 Retrieve a lost security code

Procedure

1. If the you forget the security code, enter `555` at the ID prompt and press **ENTER**.
   The transmitter displays the present code.
2. Press **EXIT** to return to the process display.
3. Press **PROG** or **CAL**.
   The ***ID*** screen appears.
4. Use the editing keys to enter the security code. Then press **ENTER**.
   The first sub-menu under the selected menu appears.

6.7 Activate or deactivate HOLD

Activating HOLD keeps the transmitter output at the last value or sends the output to a previously determined value. This is particularly useful when doing calibrations. During calibrations, the sensor may be exposed to solutions that have concentrations outside the normal range of the process. HOLD prevents false alarms and undesired operation as a result of that reading. You can deactivate HOLD when the sensor is reinstalled in the process stream and the readings have relatively stabilized.

Procedure

1. Press **HOLD** on the remote controller.
   The `HOLD` prompt appears in the display.
2. Press **3** (up) or **5** (down) to toggle HOLD between ON and OFF.
3. Press **ENTER** to save.

7 Measurements

7.1 Calibrating pH sensors

7.1.1 Calibration overview

The ***Calibration*** menu allows you to calibrate the pH and temperature response of the sensor. To calibrate, use either the manual or the auto-calibration option. In both cases, the transmitter does a two-point calibration for pH and one-point standardization against a reference thermometer for temperature. In auto-calibration, the transmitter automatically stores the temperature-corrected calibration data. In manual calibration, you have to enter buffer values. The values are only registered when the readings are stable (automatically determined by the transmitter). All calibration procedures are guided by prompts on the display.

7.1.2 Calibration standards (buffer solutions)

- Calibrations are critical to make accurate pH measurements.
- Emerson recommends that the value of one of the pH buffer solutions is lower than the pH of the process stream and the value of the other pH buffer solution is higher than the pH of the process stream.
- For best results, make sure that the temperature of the solution is the same temperature as that of the sensor. Allow the entire measurement cell, sensor, and solution to reach relatively constant temperature.
- Using buffers at high temperatures can cause evaporation, which will change the concentration of the buffer. The change in concentration causes a change in the pH, thus resulting in an inaccurate calibration.
- Buffers have limited shelf lives. Do not use a buffer if the expiration date has passed. Store buffers at controlled room temperatures.
- Do not reuse buffer solutions. Protect buffers from excessive exposure to air. Exposure to air can cause changes in the pH of the buffer solution.
- Always rinse the sensor with DI water and remove excess water by dabbing with a clean tissue before placing it in a buffer. Only dab the sensor and do not wipe it. Wiping the sensor builds static charge which alters the reading.

7.1.3 Auto-calibrate

Prerequisites

Ensure that auto-calibration is turned ON and the appropriate buffers are used.

Procedure

1. Press **CAL** on the IRC to enter the ***CALIBRATE*** menu.

The *CALIBRATE* sub-menu appears.

2. At the *CALIBRATE* sub-menu, press **ENTER**.
   The `CAL bF1` prompt appears.
3. Rinse the sensor and place it in the first buffer. Be sure the glass bulb and the temperature element are completely submerged. Keep the sensor at least 3 in. below the liquid level. Do not rest the sensor on the glass bulb. Dislodge any trapped bubbles by swirling the sensor body.
4. Press **ENTER**.
   `BF1` flashes until the measured pH meets the programmed stability limits. If the pH reading is not relatively stable after 20 minutes, the transmitter automatically leaves the *CALIBRATE* menu and returns to the main display. If this occurs, consult Diagnostics and troubleshooting for assistance. Once the reading is stable, the display moves forward by showing a flashing number with the nominal pH.
5. Change the value by using the up and down arrows until the correct pH of the buffer solution appears. Press **ENTER** to save the first calibration point.
   `CAL BF2` appears.
6. Remove the sensor from the first buffer.
7. Rinse the sensor and place it in the second buffer solution. Again, make sure the bulb is completely submerged and the bubbles are dislodged by swirling the sensor body.
8. Press **ENTER**.
   `BF2` flashes until the reading is stable.
9. Repeat steps Step 4 and Step 5.
   The calibration is now complete, but the transmitter remains in the *CALIBRATE* sub-menu for two minutes after you press **ENTER**.
10. Remove the sensor from the buffer and reinstall it into the process stream. If the HOLD feature was used, be sure to turn off HOLD.

    The sensor will not calibrate if the electrode slope (calculated by the transmitter during calibration) is unacceptable. The transmitter displays a `SLOPE ERR HI` or `SLOPE ERR LO` error message. Refer to Diagnostics and troubleshooting for assistance.

Note
To display the electrode slope, press **CAL** on the IRC. The *CALIBRATE* sub-menu appears. Press **NEXT**. The *STD* sub-menu appears. Press **ENTER**. The `STD` prompt appears. Press **ENTER** again, and the slope appears on the display. For a good sensor, the slope is generally 50 to 60 mV.

7.1.4 Calibrate manually

Prerequisites

Ensure that auto-calibration is OFF and the appropriate buffers are used.

Procedure

1. Press **CAL** on the IRC to enter the *CALIBRATE* menu.

The *CALIBRATE* sub-menu appears.

2. At the *CALIBRATE* sub-menu, press **ENTER**.
   The `CAL BF1` prompt appears.
3. Rinse the sensor with DI water and place it in the first buffer along with a calibrated thermometer. Submerge the sensor tip at least 3 in. (76 mm) below the liquid level. Do not rest the sensor on the glass bulb. Dislodge any trapped bubbles by swirling the sensor body.
4. Once the pH reading and temperature are relatively stable, press **ENTER**. Use the editing keys to change the flashing display to the appropriate pH of the buffer solution. Press **ENTER** to save the value as buffer BF1.
   The transmitter expects a reading to be entered within 20 minutes after the `CAL BF1` prompt. If you do not press **ENTER**, the transmitter exits the *CALIBRATE* menu and returns to the process mode.
5. At the `CALBF2` prompt, remove the sensor from the first buffer. Repeat steps Step 3 and Step 4.
   The calibration is now complete, but the transmitter remains in the *CALIBRATE* sub-menu for two minutes after you press **ENTER**.
6. Remove the sensor from the buffer and reinstall it into the process stream. If the HOLD feature was turned on, be sure to turn off HOLD.

   The sensor will not calibrate if the electrode slope (calculated by the transmitter during calibration) is unacceptable. The transmitter displays a SLOPE ERR HI or SLOPE ERR LO error message. Refer to Diagnostics and troubleshooting for assistance.

Note
To display the electrode slope, press **CAL** on the IRC. The *CALIBRATE* sub-menu appears. Press **NEXT**. The *STD* sub-menu appears. Press **ENTER**. The `STD` prompt appears. Press **ENTER** again, and the slope appears on the display. For a good sensor, the slope is generally 50 to 60 mV.

7.1.5 Standardize for pH

Use standardization to match the transmitter values with those of another transmitter. The transmitter converts the difference between the two pH values into an equivalent voltage, called the reference offset.

Note
If a sensor that has been calibrated with buffers is standardized, then placing it back in the buffer will show a different measured pH than that of the buffer due to the standardization offset.

Procedure

1. Press **CAL** on the IRC to enter the *CALIBRATE* menu.
   The *CALIBRATE* submenu appears.
2. At the *CALIBRATE* submenu, press **NEXT**.
   The *STD* submenu appears.
3. Press **ENTER** to enter the STD prompt.

The process pH and temperature should be relatively stable.

4. Take a grab sample from the process stream as close to the pH sensor as possible.
   This transmitter reading is called the pH_trans.
5. Measure the pH of the sample (pH_std) using the second pH meter.
6. Note the current process reading (pH_curr). Calculate the corrected reading from the equation: ph_corr = ph_curr + (pH_std - pH_trans)
   - pH_corr = corrected pH value
   - pH_curr = current pH value
   - pH_std = standard instrument's pH value
   - pH_trans = measured sample's pH value
7. Use the editing keys to enter the pH_corr value calculated using the equation above. Press **ENTER** to save the value.
   If the corrected value is acceptable, then the display shows the slope (current electrode slope).
8. If the slope is acceptable, press **EXIT**. If the slope is unacceptable, use the editing keys to change it. Then press **ENTER**.
9. To leave the *CALIBRATE* menu, press **EXIT**.

7.2 Calibrating oxidation reduction potential (ORP) sensors

7.2.1 Oxidation reduction potential (ORP) overview

ORP is a function of temperature. The accuracy of a sensor/transmitter loop is about ±1 °C. A new sensor does not need to be calibrated often. Only calibrate the loop when:

1. ±1 °C is not acceptable.
2. You suspect an error in temperature measurement

7.2.2 Calibrate temperature with an oxidation reduction potential (ORP) sensor

Procedure

1. Place the ORP sensor and a reference thermometer in an insulated container of water at ambient temperature. Keep the sensor submerged at least 3 in. (76 mm) below the water level. Stir continuously and wait at least 20 minutes for the water, sensor, and thermometer to reach a constant temperature.
2. Press **CAL** on the IRC to enter the *CALIBRATE* menu.
   The *STD* submenu appears.
3. At the *STD* submenu, press **NEXT**.
   The *TEMP ADJ* submenu appears.

4. Press **ENTER** to display the temperature editing prompt.
5. Compare the temperature displayed by the transmitter with the temperature measured by the reference thermometer. If there is a discrepancy between the two values, use the editing keys to change the measured value to that of the thermometer.

Note
The reading cannot be changed more than 15 °C.

6. Press **ENTER**.
   The transmitter saves the value, and the display returns to the ***TEMP ADJ*** submenu.
7. Press **EXIT** to leave the ***CALIBRATE*** menu.
8. Check for linearity by measuring the temperature of water: -10 to -15 °C and +10 to +15 °C than the water used for calibration.

7.2.3 Standardize with an oxidation reduction potential (ORP) sensor

ASTM d 1498-93 gives procedures for making iron (ii) - iron (iii) and quinhydrone ORP standards. Emerson recommends the iron (ii) - iron (iii) standard. It is fairly easy to make and has a shelf life of approximately one year; in contrast, quinhydrone standards contain toxic quinhydrone and have only an eight hour shelf life. Iron (ii) - iron (iii) standard is available from Rosemount™ as PN R508-16OZ. The ORP of the standard solution measured against a silver-silver chloride reference electrode is 476 ± 20 mV at 77 °F (25 °C).

Procedure

1. Press **CAL** on the IRC to enter the ***CALIBRATE*** menu.
   The ***STD*** submenu appears.
2. Rinse the sensor with DI water and place it in the ORP standard with a reference thermometer. Ensure that the ORP sensor is submerged at least 3 in. (76 mm) below the water level.
3. Once the temperature and ORP readings are stable, press **ENTER**.
4. Use the editing keys to change the flashing display to the desired ORP reading. Press **ENTER** to save.
5. Press **EXIT** to return to the main display.

7.2.4 Match transmitter to oxidation reduction potential (ORP) sensor's temperature element

Procedure

1. Press **PROG** on the IRC.
2. Press **NEXT** until the ***TEMP*** submenu appears in the display. Press **ENTER**.
3. Press **EXIT** to return to the main display.

7.3 Calibrating contacting and toroidal conductivity sensors

7.3.1 Overview of calibrating contacting conductivity sensors

Contacting conductivity sensors do not require frequent calibrations. The sensors are ready to be installed right out of the box.

7.3.2 Calibrate contacting conductivity sensors

Procedure

1. Pres **CAL** on the IRC. Press **ENTER**.
   The *CALIBRATE* submenu appears.
2. Place the sensor in a standard solution of known conductivity and allow the measurement reading to become relatively stable.
3. Press **ENTER** to access the CAL segment with the flashing prompt.
4. Use the IRC editing keys to enter the conductivity value of the standard solution. Press **ENTER**.
5. Press **EXIT** to return to the main display.

7.3.3 Zero the sensor

Procedure

1. Press **CAL** and then **NEXT** to enter the *SENSOR 0* menu.
2. Press **ENTER** to access the *SENSOR 0* submenu.
3. Hold the sensor in the air and press **ENTER** again to zero the sensor.
4. Press **EXIT** to return to the *SENSOR 0* submenu.

7.3.4 Adjust temperature

Procedure

1. Press **CAL** and then **NEXT** until you see `TEMP`.
2. Press **ENTER**.
   The *TEMP* submenu appears.
3. Place the sensor in any solution of known temperature. Allow the temperature of the sensor to become relatively stable.
4. Use the editing keys of the IRC to change the values as needed.
5. Press **ENTER** to standardize the temperature reading and return to the *TEMP ADJ* screen.
6. Press **EXIT** to return to the main display.

7.3.5 Calibrate in-process

Procedure

1. Press **CAL** and then **NEXT** three times to access MTR CAL.
2. Use the IRC to go through the on-screen prompts.
3. Press **EXIT** to return to the main display.

7.3.6 Calibrate temperature slope

Procedure

1. From the *CAL* menu, press **NEXT** until `TEMP SLOPE` displays.
2. Use the IRC arrow keys to enter the slope. Press **ENTER** to register the slope in the memory of the transmitter. Press **EXIT** to return to the main screen.
3. If you don't know the temperature slope of the process, then refer to the below guide:
   - Acids: 1.0 percent to 1.6 percent per °C
   - Bases: 1.8 percent to 2.2 percent per °C
   - Salts: 2.2 percent to 3.0 percent per °C
   - Water: 2.0 percent per °C
4. Press **ENTER** to proceed to the *T SLOPE* submenu with the flashing prompt. Use the IRC keys to generate the desired slope value. Press **ENTER**.
5. Press **EXIT** to return to the main screen.

7.3.7 Calibrate output

Procedure

1. Wire an accurate milliammeter as shown in Figure 7-1.

Figure 7-1: Milliammeter Wiring

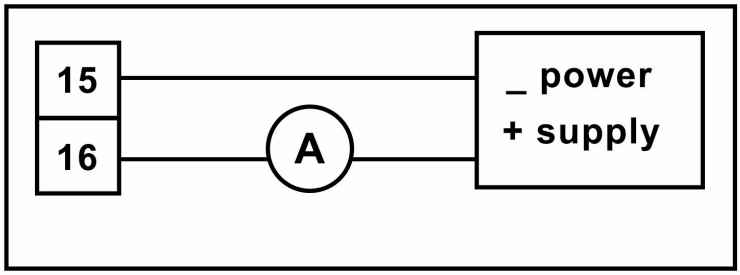

2. Press **CAL** on the IRC.
3. Press **NEXT** until the *OUTPUT CAL* submenu appears. Press **ENTER**.

4. Use the arrow keys to change the display to match the reading from the milliammeter. Press **ENTER**.
5. Press **RESET** to return to the main display.

7.4 Calibrating dissolved oxygen, ozone, free chlorine, total chlorine, and ozone sensors

7.4.1 Calibrating amperometric sensors

You can calibrate amperometric sensors in multiple ways: zeroing, air calibrations, dual slope calibrations, and in process calibrations.

7.4.2 Zero the sensor

Procedure

1. Place the sensor in a solution of 5% sodium sulfite (Na_2SO_3) in water. Ensure that air bubbles are not trapped against the membrane.
2. Go to the main display; press **DIAG** and then **NEXT**.
   The `SENSOR CUR` prompt appears.
3. Press **ENTER** to view the sensor current. Make sure the sensor reaches its zero current.

   This may require several hours. Do not start the zero routine until the sensor has been in zero solution for at least two hours.
4. Press **CAL** on the IRC.
   The `SENSOR 0` prompt appears.
5. Press **ENTER**.
   The screen shows the appropriate value correlating to the zero value. The screen shows `0.02`. The reading must be below 0.02 ppm for the zero calibration to be accepted.
6. To change the zero limit, use the editing keys and then press **ENTER**.
   The `TIME DELAY` message appears and remains until the zero current is below the concentration limit. If the current is already below the limit, `TIME DELAY` will not appear.
7. To bypass the time delay, press **ENTER**.
   When the procedure is complete, `0 DONE` appears.
8. Press **EXIT**.
9. Press **RESET** to return to the main display.

7.4.3 Calibrate in air (dissolved oxygen)

Procedure

1. Remove the sensor from the process liquid. Use a soft tissue and a wash bottle to clean the membrane. Dry it by blotting.
   The membrane must be completely dry during air calibration.
2. Pour some water into a beaker and suspend the sensor with the membrane approximately ½ in. (approximately 1 cm) above the water surface.
   Keep the sensor out of direct sunlight.
3. Monitor the dissolved oxygen and temperature reading. Once the readings are relatively stable, begin the calibration.
   It may take 10 - 15 minutes for the sensor reading in the air to stabilize.
4. Press **CAL** on the IRC.
5. Press **NEXT**.
   The *SENSOR CAL* submenu appears.
6. Press **ENTER**.
   The `AIR CAL` prompt appears.
7. Press **ENTER**.
8. Select the units. Then press **NEXT**.
9. Use the arrow keys to enter the barometric pressure. Press **ENTER** when done.
   The `TIME DELAY` message appears and remains until the sensor reading is relatively stable.
10. To bypass the time delay, press **ENTER**.
    `CAL DONE` appears when the calibration is complete.
11. Press **EXIT**.
12. To return to the main display, press **RESET**.

7.4.4 Calibrate in process (dissolved oxygen)

You can calibrate the sensor against a standard instrument.

Procedure

1. Press **CAL** on the IRC.
2. Press **NEXT**.
   The *SENSOR CAL* submenu appears.
3. Press **ENTER**.
4. Press **NEXT**.
   The `AIR CAL` prompt appears.
5. Press **NEXT**.
   The `INPROCESS` prompt appears.
6. Press **ENTER**.

The TIME DELAY message appears and will remain until the sensor is relatively stable. To bypass the time delay, press **ENTER**. The GRAP SPL message appears.

7. Press **ENTER**.
8. Use the arrow keys to change the flashing display to the value indicated by the standards instrument. Press **ENTER**.
9. Press **RESET** to return to the main display.

7.4.5 Calibrate full scale (free chlorine, total chlorine, ozone)

Procedure

1. Place the sensor in the process liquid. Ensure that the pH sensor is calibrated or the pH value is entered in case of manual pH correction, if applicable.
2. Adjust the chlorine concentration until it is near the upper end of the control range. Wait until the reading is relatively stable before starting the calibration.
3. Press **CAL** on the IRC.
4. Press **NEXT**.
   The *SENSOR CAL* submenu appears.
5. Press **ENTER**.
   The TIME DELAY message appears and will remain until the sensor reading is relatively stable. To bypass the time delay, press **ENTER**. The GRAB SPL prompt appears.
6. Take a sample of the process liquid and determine the concentration of chlorine in the sample. Press **ENTER**.
7. Press **RESET** to return to the main display.

7.4.6 Calibrate dual slope (free chlorine, total chlorine)

Procedure

1. Zero the sensor.
2. Place the sensor in the process liquid. Ensure that the pH sensor is calibrated or the pH valve is entered in case of manual pH correction, if applicable.
3. Press **CAL** on the IRC. Press **NEXT**.
   The *SENSOR CAL* prompt appears.
4. Press **ENTER**.
   The CAL PT1 prompt appears.
5. Adjust the chlorine concentration until it is near the upper end of the linear range of the sensor. Press **NEXT**.
   The TIME DELAY message appears and will remain until the sensor reading is relatively stable. To bypass the time delay, press **ENTER**. The GRAB SPL prompt appears.
6. Take a sample of the process liquid and determine the concentration of chlorine in the sample.
7. Press **ENTER**.

The PT1 prompt appears.

8. Use the arrow keys to change the flashing display to the concentration of chlorine determined in the grab sample. Press **ENTER** to save.
   The CAL PT2 prompt appears.
9. Adjust the concentration of chlorine until it is near the top end of the range. Press **ENTER**.
   The TIME DELAY message appears and will remain until the sensor reading is relatively stable. To bypass the time delay, press **ENTER**. The GRAB SPL prompt appears.
10. Take the sample of the process liquid and determine the concentration of chlorine in the sample.
11. Press **ENTER**.
    The PT2 prompt appears.
12. Use the arrow keys to change the flashing display to the concentration of chlorine determined in the grab sample. Press **ENTER** to save.
13. Press **RESET** to return to the main display.

8 Diagnostics and troubleshooting

8.1 Warning and fault messages

The Rosemount™ 5081 transmitter continuously monitors the measurement loop (sensor and transmitter) for conditions that cause inaccurate measurements. When a problem occurs, the transmitter displays either a warning or fault message. A warning alerts you that a potentially system disabling condition exists. If you don't fix the problem, there is a high probability that the measurement will be incorrect. A fault alerts you that a system disabling condition exists. If a fault message is showing, regard all measurements as incorrect.

When a warning condition exists:

1. The main display remains stable; it does not flash.
2. A warning message appears alternately with the temperature display. See Figure 8-1. See Troubleshooting when a diagnostic message is showing for an explanation of the different warnings and suggested ways of correcting the problem.

Figure 8-1: Warning Annunciation

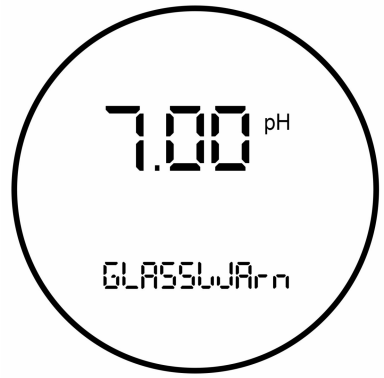

When a Fault exists:

1. The main display flashes.
2. The words FAULT and HOLD appear in the main display.
3. A fault message appears alternately with the temperature/output display. See Figure 8-2. See Troubleshooting when a diagnostic message is showing for an explanation of the different fault messages and suggested ways of correcting the problem.
4. The output current will remain at the present value or go to the programmed fault value.
5. If the transmitter is in Hold when the fault occurs, the output remains at the programmed hold value. To alert you that a fault exists, the word FAULT appears in the main display, and the display flashes. A fault or diagnostic message also appears.

6. If the transmitter is simulating an output current when the fault occurs, the transmitter continues to generate the simulated current. To alert you that a fault exists, the word `FAULT` appears in the display, and the display flashes.

Figure 8-2: Fault Annunciation



When a a fault occurs, the display appears as pictured above. To further alert you that measurements are in error, the display flashes. Diagnostic messages appear in the temperature/output area on the screen.

8.2 pH/ORP diagnostics and troubleshooting

8.2.1 Calibration errors

If an error occurs during calibration, an error message appears in the main display and the transmitter does not update the calibration. The calibration errors are `Std Err`, `SLOPE Err LO`, and `SLOPE Err HI`. See Troubleshooting when a diagnostic message is showing for an explanation of the error messages and suggested ways of correcting the problem.

8.2.2 General troubleshooting

Procedure

1. Look for a diagnostic message on the display to help identify the problem.

   Refer to Troubleshooting when a diagnostic message is showing for an explanation of the message and a list of the possible problems that triggered it.
2. Refer to Troubleshooting when no diagnostic message is showing for common measurement problems and the recommended actions to resolve them.
3. Follow the step-by-step troubleshooting approach, offered in Displaying diagnostic variables, to diagnose and correct less common or more complex problems.

8.2.3 Troubleshooting when a diagnostic message is showing

The Rosemount 5081-P pH/ORP transmitter continuously monitors the measurement loop (sensor and transmitter) for problems. If a problem is detected, the transmitter

displays a fault or error message. The message appears in the temperature/output area of the main display. The table lists each diagnostic message and the section to consult for help.

Message	Section
GLASSFAIL	GLASSFAIL
GLASSWArn	GLASSWArn
rEF FAIL	rEF FAIL
rEF WArn	rEF WARn
CALIbrAtE	CALIbrAtE
tEMP HI	tEMP HI and tEMP LO
tEMP LO	tEMP HI and tEMP LO
LInE FAIL	LinE FAIL
InPUt WArn	InPUt WArn
SLOPE Err LO	SLOPE Err LO
SLOPE Err HI	SLOPE Err HI
Std Err	Std Err
rOM FAIL	rOM FAIL or CPU FAIL
CPU FAIL	rOM FAIL or CPU FAIL
AdC WArn	AdC WArn or CyCLE PWr
CyCLE PWr	AdC WArn or CyCLE PWr
WrItE Err	WritE Err
FACt FAIL	FACt FAIL

GLASSFAIL

`GLASSFAIL` is an electrode fault message. It means the glass impedance is outside the programmed Glass Fault High (GFH) or Glass Fault Low (GFL) limit. Glass Fault High suggests the electrode is aging or the electrode is not immersed in the process liquid. Glass Fault Low implies that the pH sensitive glass is cracked. `GLASSFAIL` also appears if inappropriate limits have been entered into the transmitter.

If the measurement system was previously commissioned and operating correctly, `GLASSFAIL` likely means a real problem exists. However, if the system is being started up or if the advanced diagnostic feature is being used for the first time, `GLASSFAIL` could be caused by a miswired sensor or by programmed limits that are not correct for the sensor.

Note
`GLASSFAIL` is a sensor diagnostic message. Sensor diagnostic messages are optional. They can be turned off.

Recommended actions

1. Be sure the sensor is completely immersed in the process liquid.

If the diagnostic message disappears, the sensor is in good condition.

If the diagnostic message remains, go to Step 2.

2. Measure the glass impedance. See Testing the transmitter by simulating the pH for the procedure. Note the reading.

   If the glass impedance is low (< 40 megohms)...

   a. Check preamp location in program menus (PAMP = _____).
      - If the location is incorrect, go to 2.b.
      - If after selecting the correct location of Preamp in the Program menu, the glass impedance is still low, go to Step b.

   b. Calibrate the sensor.
      - If the sensor calibrates properly...
        1. The sensor is in good condition, but the Glass Fail Low (GFL) limit is set too high.
        2. Lower the GFL limit to about 10 megohms below the glass impedance value (GIMP).
        3. If the Glass Warning Low (GWL) message was also flashing, lower the limit from its former value by the same amount the GFL was lowered from its former value.
      - If the sensor cannot be calibrated, the pH glass membrane is likely cracked and the sensor must be replaced. The crack in the glass may not be visible or may be difficult to see.

   If the glass impedance is high (> 800 megohms)...

   a. Check that the sensor is correctly wired to the transmitter. Pay particular attention to the following:
      1. For Rosemount PLUS (+) and TUpH sensors with integral preamplifiers, the blue solution ground wire must be attached to TB-8 (SOL GND), and the gray reference in wire must be attached to TB-7 (REF IN).

         Note
         TB-8 means terminal 8 on the terminal board.

      2. If the sensor was wired with the blue solution ground wire unattached and a jumper between the terminals TB-8 and TB-7, remove the jumper and reattach the blue solution ground wire to TB-8. Keep the gray reference in wire attached to TB-7.
      3. For Rosemount PLUS (+) and TUpH sensors that do not have an integral preamplifier, attach the blue solution ground wire to TB-8 or, better, leave the blue wire unattached and jumper TB-7 to TB-8.
      4. If the sensor does not have a blue solution ground wire, jumper terminals TB-7 and TB-8.
         - If the wiring was correct and the glass impedance is still too high, go on to 2.b.

- If correcting wiring errors causes the diagnostic message to disappear, the sensor is in good condition.
- If after correcting wiring errors, the glass impedance is still high, go on to Step b.

b. Inspect and clean the sensor. After cleaning the sensor, calibrate it. Be sure to note the sensor slope.
   - If cleaning the sensor lowers the impedance below 800 megohms:
     1. The sensor is in good condition.
     2. Return the calibrated sensor to service.
   - If cleaning does not lower the glass impedance and the sensor can be calibrated:
     1. The sensor is probably in good condition; however, it may be nearing the end of its life. The electrode slope is a good indicator of remaining life.

Slope	Condition of sensor
54-60 mV/unit pH	Sensor is in good condition.
48-50 mV/unit pH	Sensor is nearing the end of its life. Once the slope drops below 48 mV/unit pH, the sensor can no longer be calibrated.

     2. The Glass Fail High (GFH) limit is probably set too low for the sensor. Set the GFH limit to about 150 megohms greater than the measured glass impedance.
     3. If the `GLASSWArn` message was also flashing, raise the GWH limit from its former value by the same amount the GFH was raised from its former value.
   - If cleaning does not lower the glass impedance and the sensor cannot be calibrated, the sensor has failed and should be replaced.

GLASSWArn

`GLASSWArn` is an electrode fault message. It means the glass impedance is outside the programmed Gas Warning High (GWH) or Glass Warning Low (GWL) limit. Ideally, when the measurement system exceeds the glass warning limits, you will have adequate time to diagnose and correct problems before a failure occurs. High impedance implies the electrode is aging or the sensor is not completely submerged in the process liquid. Low impedance suggests the pH sensitive glass is cracked. The message also appears if inappropriate limits have been entered into the transmitter.

If the measurement system was previously commissioned and operating correctly, `GLASSWArn` likely means a real problem exists. However, if the system is being started up or if the advanced diagnostic feature is being used for the first time, `GLASSWArn` could be caused by a miswired sensor or by programmed limits that are not correct for the sensor.

Note
GLASSWArn is a sensor diagnostic message. All sensor diagnostic messages are optional. They can be turned off.

Troubleshooting GLASSWArn problems is exactly the same procedure as troubleshooting GLASSFAIL problems. Refer to GLASSFAIL.

rEF FAIL

rEF FAIL is an electrode fault message. rEF FAIL means that the reference impedance exceeds the programmed reference high fault (RFH) limit. A plugged or dry reference junction is the usual cause of a high reference impedance. High reference impedance also occurs if the sensor is not submerged in the process liquid or if inappropriate limits have been entered into the transmitter.

If the operator previously commissioned the measurement system and it was operating correctly, rEF FAIL likely means a real problem exists. However, if the operator is just starting up the system or using the advanced diagnostic feature for the first time, rEF FAIL could be caused by a miswired sensor or by programmed limits that are not correct for the sensor.

Note
rEF FAIL is a sensor diagnostic message. All sensor diagnostic messages are optional. They can be turned off.

Recommended actions

1. Be sure the sensor is completely immersed in the process liquid.
   - If the diagnostic message disappears, the sensor is in good condition.
   - If the diagnostic message remains, go to Step 2.
2. Check that the sensor is properly wired to the transmitter. Be sure the reference in wire is attached to TB-7 and the solution ground wire is attached to TB-8.

   Note
   TB-8 means terminal 8 on the terminal board.

   - If correcting wiring problems makes the diagnostic message disappear, the sensor is in good condition.
   - If the wiring is correct and the message still remains, go to Step 3.
3. Measure and make a note of the reference impedance (rIMP). See Testing the transmitter by simulating the pH.
   - If the reference impedance is low (< 70 kilohms)...
     a. The reference electrode is in good condition. pH sensors manufactured by Rosemount use low impedance silver/silver chloride reference electrodes.
     b. The reference failure high (RFH) limit is probably set too low. Change the limit to a value about 50 kilohms greater than the measured reference impedance. If rEF WARN was also displayed, change the reference

warning high (RWH) limit to about 25 kilohms above the measured reference impedance.

- If the reference impedance is high (> 70 kilohms)...
  a. The sensor may be dirty, in which case cleaning it will lower the impedance. If the sensor is rebuildable, the reference electrolyte may be depleted. Finally, the sensor may be in good condition. The warning and failure limits are simply set too high.
  b. Inspect and clean the sensor. If the sensor is rebuildable, replace the reference junction and replenish the electrolyte solution. Refer to the sensor reference manual for details. Check the reference impedance again.
     — If cleaning the sensor reduces the impedance...
        1. The sensor is in good condition. Calibrate the sensor and return it to the process.
        2. Change the reference failure high (RFH) limit to a value about 50 kilohms greater than the measured reference impedance. If `rEF WARN` was also displayed, change the reference warning high (RWH) limit to about 25 kilohms above the measured reference impedance.
     — If cleaning does not reduce the impedance and the sensor is not rebuildable...
        1. Try the reference junction rejuvenation procedure. The rejuvenation procedure may not work. At best, it will get a little more life out of a sensor with a plugged reference.
        2. Whether or not the rejuvenation procedure worked, go to 3.c.
  c. Recalibrate the sensor using the autocalibration procedure.
     — If the sensor can be calibrated:
        1. The sensor is in good condition. Return it to the process.
        2. Change the reference failure high (RFH) limit to a value about 50 kilohms greater than the measured reference impedance. If `rEF WARN` was also displayed, change the reference warning high (RWH) limit to about 25 kilohms greater than the measured reference impedance.
     — If the sensor cannot be calibrated, the sensor has failed and must be replaced.

rEF WARn

`rEF WArn` is an electrode fault message. It means the reference electrode impedance exceeds the programmed reference warning high (RWH) limit. Ideally, when the measurement system exceeds the warning limits, you will have adequate time to diagnose and correct problems before a failure occurs. A high reference impedance implies that the liquid junction is plugged or the reference electrolyte is depleted. The message also appears if an inappropriate limit has been entered into the transmitter.

If the measurement system was previously commissioned and operating correctly, rEF WArn likely means a real problem exists. However, if the system is being started up or if the advanced diagnostic feature is being used for the first time, rEF WArn could be caused by a miswired sensor or by programmed limits that are not correct for the sensor.

Note
rEF WArn is a sensor diagnostic message. Sensor diagnostic messages are optional. They can be turned off.

Troubleshooting rEF WArn problems is exactly the same as troubleshooting rEF FAIL problems. Refer to rEF FAIL.

CALIbrAtE

CALIbrAte is a diagnostic intended for future use. If the CALIbrAte message is showing, disable CALIbrAte.

tEMP HI and tEMP LO

tEMP HI and tEMP LO mean the transmitter has detected a problem with the temperature measuring circuit. The problem may lie in the sensor, the cable, or the transmitter. The determination of temperature is an integral part of the pH measurement. Therefore, failure of the temperature measuring circuit is a system disabling condition. However, in an emergency, automatic temperature compensation can be disabled and the transmitter placed in manual temperature compensation. For manual temperature compensation, choose a temperature equal to the average temperature of the process. The resulting pH reading will be in error. The more variable the temperature and the further the pH from 7, the greater the error.

Recommended actions

1. Check wiring, jumper settings, and software settings.
   a. Check the wiring between the sensor and the transmitter. Pay particular attention to TB=3 (RTD RTN), TB-4 (RTD SN), and TB-5 (RTD RTN).

      Note
      TB-3 means terminal 3 on the terminal board.

   b. Be sure the software settings match the type of resistance temperature device (RTD) in the sensor.
      - If the diagnostic message disappears, the sensor is in good condition.
      - If the message persists, go to Step 2.

2. Check the sensor. Disconnect the RTD leads and measure the resistances shown in Figure 8-3.

   The measured resistance should agree with the value in Table 8-1 to within about one percent. If the measured resistance is appreciably different (between one and five percent) from the value shown, the operator can calibrate out the discrepancy.

Figure 8-3: Three-Wire RTD

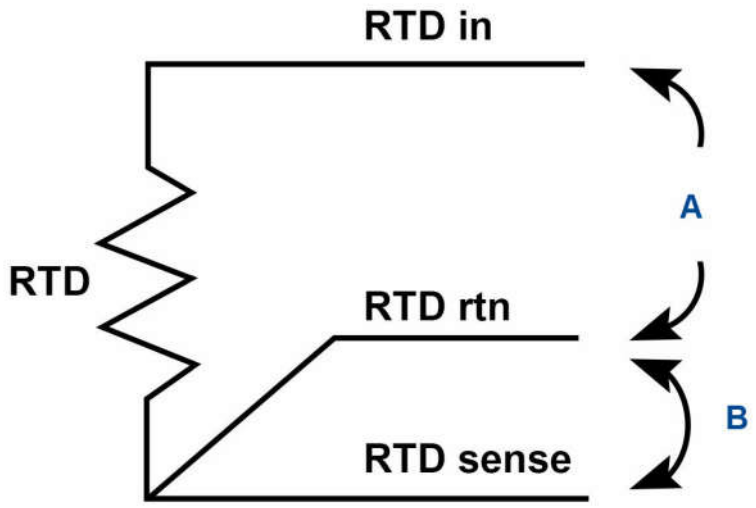

A. Compare resistance between these wires to the values in Table 8-1.
B. Resistance between these wires should be less than 2 ohms.

Consult Table 8-1 for resistance-temperature data. Lead resistance is about 0.05 ohm/ft at 77 °F (25 °C). Therefore, 15 feet of cable increases the resistance by about 1.5 ohm. The resistance between the RTD return and RTD sense leads should be less than 2 ohms.

Table 8-1: RTD Resistance Values

Temperature	Pt-100 resistance	Pt-1000 resistance
0 °C (32 °F)	100.0 ohms	1000 ohms
10 °C (50 °F)	103.9 ohms	1039 ohms
20 °C (68 °F)	107.8 ohms	1078 ohms
25 °C (77 °F)	109.6 ohms	1096 ohms
30 °C (86 °F)	111.7 ohms	1117 ohms
40 °C (104 °F)	115.5 ohms	1155 ohms
50 °C (122 °F)	119.4 ohms	1194 ohms
60 °C (140 °F)	123.2 ohms	1232 ohms
70 °C (158 °F)	127.1 ohms	1271 ohms
80 °C (176 °F)	130.9 ohms	1309 ohms
90 °C (194 °F)	134.7 ohms	1347 ohms
100 °C (212 °F)	138.5 ohms	1385 ohms

- If a connections is open or shorted and it should not be, the sensor has failed. Replace the sensor.

- If the measured resistances are acceptable, go to Step 3.

3. Check the transmitter. Disconnect the RTD sensor leads and wire the circuit shown in Figure 8-4. Set the resistance to the value for 25 °C (77 °F) shown in Table 8-1. The measured temperature should equal 25 °C (77 °F) within ±1 °C.

Figure 8-4: Temperature Simulation into the Rosemount 5081 pH/ORP Transmitter

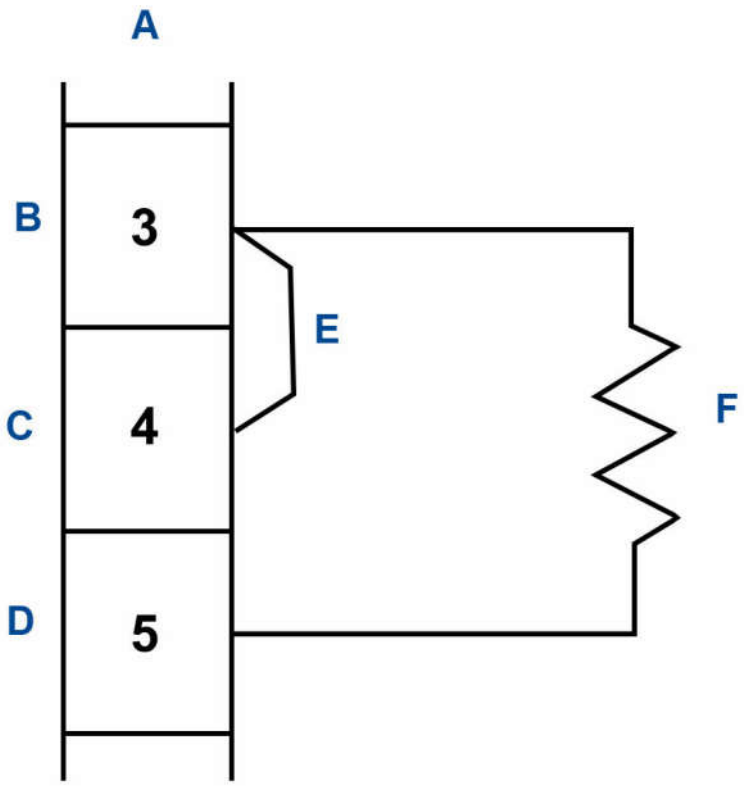

A. Terminal board
B. RTD return
C. RTD sense
D. RTD in
E. Jumper
F. Standard resistor(s) to stimulate RTD

- If the measured temperature is correct, the transmitter is working properly.
- If the measured temperature is incorrect, calibrate the transmitter against the standard resistance equivalent to 77 °F (25 °C). Change the resistance and verify that the temperature reading changes to the correct value.
  - If the transmitter works properly after temperature calibration, the original calibration was in error. Re-attach the RTD wires and check the temperature performance of the sensor.

— If the reading is still wrong, the transmitter electronics have failed. Replace the sensor board stack.

LinE FAIL

`LinE FAIL` almost always means the transmitter is measuring an incorrect distance between terminal TB-3 (resistance temperature device [RTD] return) and TB-4 (RTD sense). These terminals are critical connections for the three-wire RTD measurement. Figure 8-3 shows a three-wire RTD connection.

Recommended actions

1. Check for miswires and open connections at TB-3 and TB-4. Open connections can be caused by loose connections, poor spade crimps, or broken wires. Be sure the check junction boxes for proper pass through of all wires.
   - If correcting a wiring problem makes the message disappear, the system is in good condition.
   - If the message is still showing, go to Step 2.
2. The RTD sense or the RTD return wire inside the sensor cable may be broken. Keep the sensor wires attached and jumper TB-3 and TB-4.
   - If the diagnostic message disappears, either the RTD return or RTD sense wire is broken. To verify a broken wire, disconnect the leads and measure the resistance between them. Installing the jumper completes the circuit, but bypasses the three-wire function. The transmitter no longer corrects for changes in lead wire resistance with temperature. replace the sensor as soon as possible.
   - If the diagnostic message remains, go to Step 3.
3. The cable connecting the sensor to the transmitter may be too long. Test using a sensor with a shorter cable.
   - If shortening the cable eliminates the problem, move the transmitter closer to the sensor. It may also be possible to increase diameter of the RTD wires. Consult the factory for assistance.
   - If the diagnostic message remains, go to Step 4.
4. Check the temperature of the transmitter. Simulate both temperature and pH. See tEMP HI and tEMP LO (steps 2 and 3) for temperature simulation and Simulating inputs - pH for pH simulation.
   - If the transmitter fails either simulation, the electronic board stack should be replaced.
   - If the transmitter passes the simulations, the transmitter is not in good condition, and the sensor should be replaced.

InPUt WArn

`InPUt WArn` means that the input value or the calculated pH is outside the measurement range. The measured pH is less than -2 or greater than 16.

Recommended actions

1. Check for miswires and open connections, particularly at TB-10. Open connections can be caused by loose connections, poor spade crimps, or broken wires. Be sure to check junction boxes for proper pass through of all wires.
   - If correcting a wiring problem clears the message, the system is in good condition.
   - If the message is still showing, go to Step 2.
2. Check that the transmitter is working properly by simulating a pH input. See Testing the transmitter by simulating the pH.
   - If the transmitter does not respond to simulated inputs, replace the board stack.
   - If the transmitter performs satisfactorily and the preamplifier is located in a remote junction box or in a sensor-mounted junction box, go to Step 3.
   - If the transmitter performs properly and the preamplifier is located in the transmitter, the sensor has failed and should be replaced.
3. The problem may lie with the remote preamplifier or with the cable connecting the preamplifier and junction box to the transmitter.
   a) Be sure all wires between the junction box and transmitter are connected.
   b) Use Rosemount cable.
      Generic cable may not work.
   - If the disagnostic message clears, the interconnecting cable was the problem.
   - If the message remains, go to Step 4.
4. Confirm that the problem is with the remote preamplifier.
   a) Wire the pH sensor directly to the transmitter.
   b) Change the menu from PAMP=SnSr to trAnS for the test and return it to SnSr afterwards.
   - If the error message clears, the remote preamplifier is faulty. Replace the preamplifier.
   - If the error message remains, the sensor has failed. Replace the sensor.

SLOPE Err LO

`SLOPE Err LO` means that a two-point buffer calibration attempt has failed. The slope is too low (<40 mV/pH) for a good measurement.

Recommended actions

1. Repeat the calibration.
   a) Inaccurate buffers can cause a low slope. Repeat the calibration using fresh buffers. Alkaline buffers, pH 10 or greater, are particularly susceptible to changing value in air or with age. If you used a high pH buffer in the failed calibration, try a lower pH buffer when repeating the calibration. For example, use pH 4 and 7 buffer instead of pH 7 and 10 buffer.

b) Allow adequate time for readings in buffer to become constant. If the sensor was in a process substantially colder or hotter than the buffer, allow at least 20 minutes for readings in the buffer to stabilize. Alternatively, place the sensor in a container of water at ambient temperatures for 20 minutes before starting the calibration.

c) Be sure the correct buffer values are being entered during calibration.

- If the second calibration was successful, an error was made during the first attempt.
- If the second calibration fails, go to Step 2.

2. Check wiring. Connections to TB-10, TB-7, and TB-8 are particularly important. Recalibrate the sensor.
   - If the wiring was the only problem, the sensor should calibrate.
   - If the message persists, go to Step 3.
3. Inspect and clean the sensor. Recalibrate the sensor.
   - If the sensor was dirty, it should calibrate after cleaning.
   - If the message persists, go to Step 4.
4. Check for a faulty sensor.
   - If a spare sensor is available, connect it to the transmitter. Use the auto calibration procedure to calibrate the sensor.
     — If the new sensor cannot be calibrated, the transmitter is faulty. Go to Step 5.
     — If the new sensor can be calibrated, the old sensor has failed.
   - If a spare sensor is not available, measure the glass impendance (GIMP). See Testing the transmitter by simulating the pH.
     — If the glass impedance is less than about 20 megohms, the glass has cracked and the electrode must be replaced.
     — If the glass impedance is greater than about 20 megohms, the sensor is probably in good condition. Go to Step 5.
5. Check transmitter performance by simulating pH inputs. See Testing the transmitter by simulating the pH.
   - If the transmitter performs satisfactorily, go to Step 6.
   - If the transmitter does not respond to stimulated inputs, replace the board stack.
6. If the transmitter responds to simulated inputs, the problem must lie with the sensor or the interconnecting wiring. Verify the interconnecting wiring point to point. Fix or replace bad cable. If the cable is good, replace the pH sensor.

SLOPE Err HI

`SLOPE Err HI` means that a two-point buffer calibration attempt has failed. The slope is too high (> 62 mV/pH) for a good measurement.

Recommended actions

1. Repeat the calibration.
   a) Inaccurate buffers can cause a high slope. Repeat the calibration using fresh buffers. Alkaline buffers, pH 10 or greater, are particularly susceptible to changing value in air or with age. If you used a high pH buffer in the failed calibration, try a lower pH buffer when repeating the calibration. For example, use pH4 and 7 buffer instead of pH 7 and 10 buffer.
   b) Allow adequate time for readings in buffer to become constant. If the sensor was in a process substantially colder or hotter than the buffer, allow at least 20 minutes for readings in the buffer to stabilize. Alternatively, place the sensor in a container of water at ambient temperature for 20 minutes before starting the calibration.
   c) Be sure the correct buffer values are being entered during calibration. To minimize errors caused by entering the wrong buffer values, use the autocalibration procedure.
   d) Verify that the temperature reading is accurate. Compare the sensor reading against a thermometer known to be accurate. Recalibrate if necessary.

   - If the second calibration was successful, an error was made during the first attempt.
   - If the second calibration fails, go to Step 2.

2. There is a remote possibility of a problem with the autocalibration program. Repeat the calibration using the manual calibration procedure.
   - If manual calibration was successful when autocalibration failed, the problem might be with the sensor electronics. Call the factory for assistance.
   - If manual calibration is not possible, go to Step 3.

3. Check the transmitter performance by simulating pH inputs. See Testing the transmitter by simulating the pH.
   - If the transmitter performs satisfactorily, go to Step 4.
   - If the transmitter does not respond to stimulated inputs, replace the board stack.

4. If the transmitter responds to simulated inputs, the problem must lie with the sensor or the interconnecting wiring. Verify the interconnecting wiring point to point. Fix or replace bad cable. If cable is good, replace the pH sensor.

Std Err

`Std Err` means the reference electrode voltage has changed drastically. Typical causes are exposure to poisoning agents, sulfides or cyanides, or prolonged exposure to high temperature.

Troubleshooting depends on the type of sensor.

Recommended actions

1. If the sensor is rebuildable, replenish the electrolyte solution and replace the liquid junction. Calibrate the sensor.
   - If the sensor can be calibrated, the problem has been corrected.
   - If the sensor cannot be calibrated, replace the sensor. If the sensor has separate measuring and reference electrodes, replace only the reference electrode.
2. If the sensor is not rebuildable, try the reference electrode rejuvenation procedure.
   - If the rejuvenated sensor can be calibrated, the problem has been corrected.
   - If the sensor cannot be calibrated, replace the sensor.

rOM FAIL or CPU FAIL

`rOM FAIL` or `CPU FAIL` means the transmitter electronics have failed.

Recommended action

Replace the electronic board stack (PN 23992-02 [-HT] or PN 23992-03 [-HF]).

AdC WArn or CyCLE PWr

The `Adc WArn` or `CyCLE PWr` message appears momentarily when the transmitter has recognized an internal calculation problem. The transmitter repeats the calculation, and the message disappears once the calculation is successful. If the message is displayed constantly, the transmitter electronics may be faulty.

Recommended actions

1. Check transmitter performance by simulating pH inputs. See Testing the transmitter by simulating the pH.
   - If the transmitter performs satisfactorily, go to Step 2.
   - If the transmitter does not respond to simulated inputs, replace the board stack.
2. If the transmitter responds to simulated inputs, the problem must lie with the sensor or the interconnecting wiring. Verify the interconnecting wiring point to point. Fix or replace bad cable. If cable is good, replace the pH sensor.

WritE Err

`WriTE Err` means that jumper JP1 on the CPU board is not in place. If the sensor is not in place, the transmitter cannot be programmed or calibrated.

Recommended actions

1. Check the position of jumper JP1 on the CPU board. If the jumper is hanging off one of the pins, place it across both pins. If the jumper is missing entirely, use jumper JP3 (50/60 Hz), which is not a critical jumper.

   There are similar numbered jumpers on the analog board. The jumper to be checked is on the CPU board, which is the center board in the stack.
2. Turn the power to the transmitter off and then back on.

- Toggling the power should cause the message to disappear.
- If the message does not disappear, replace the electronic board stack.

FACt FAIL

`FACt FAIL` means the unit has not been factory calibrated. Call the factory. The transmitter will probably need to be returned to the factory for calibration.

8.2.4 Troubleshooting when no diagnostic message is showing

If no diagnostic message is showing, locate the symptom(s) in the table below and refer to the appropriate section for assistance.

Symptom	Section
`Id000` appears in display when trying to program or calibrate transmitter	Id000 in display
Error message flashing in display	Troubleshooting when a diagnostic message is showing
Transmitter does not respond to remote controller	Transmitter not responding to IRC
Calibration problems	
`SLOPE Err HI` or `SLOPE Err LO` appears after calibration attempt	SLOPE Err LO or SLOPE Err Hi appear after calibration attempt
`bF1` or `bF2` continuously flashes during auto calibration	bF1 or bF2 continuously flashes during autocalibration
pH reading in buffer drifts during manual calibration	pH reading in buffer drifts during manual calibration
Measurement problems	
Sensor does not respond to known pH changes	Sensor does not respond to known pH changes
Buffer calibration is acceptable; process pH is slightly different from expected value	Buffer calibration is acceptable; process pH is slightly different from expected value.
Buffer calibration is acceptable; process pH is grossly wrong and/or readings are noisy	Buffer calibration is acceptable; process pH is grossly different from expected value
Temperature reading is inaccurate	Temperature reading is inaccurate
Transmitter problems	
No display	No display
Display segments missing or display incorrect	Display segments missing
Transmitter locked up, all display segments lit	Transmitter locks up
Transmitter periodically restarts itself	Transmitter periodically restarts itself

Id000 in display

A security code has been programmed into the transmitter. The correct code must be entered before the transmitter can be programmed or calibrated.

Transmitter not responding to IRC

Recommended actions

1. Be sure the transmitter is receiving the signal.
   a) Clean the window in front of the IR detector.
      The detector is a small rectangle just above the main display.
   b) Hold the IRC at least 6 ft. (1.8 m) from the transmitter and not more than 15 degrees from the center.
   c) Hold the IRC closer (within 2 ft. [.6 m]) in case the batteries are getting weak.
2. If Step 1 fails, check the IRC.
   a) If a second transmitter is available, test the IRC on that transmitter. If a spare transmitter is not available, continue with Step b.
   b) The green LED, located just above and between the **RESET** and **HOLD** buttons, should light when a key is pressed. A piece of black rubber film may be covering the LED. Scrape the film away with your fingernail to expose the LED.
      The two clear LEDs on the front end of the IRC never light. They transmit the invisible IR signal.
   c) If the green LED does not light, the IRC is not working. Go to Step 3.
3. Take the IRC to a non-hazardous area and replace the two 1.5 Vdc AAA batteries.
   - If the green LED lights, but the transmitter still does not respond, go to Step 4.
   - If neither the LED lights nor the transmitter responds, replace the IRC.
4. Replace the transmitter display board.

SLOPE Err LO or SLOPE Err Hi appear after calibration attempt

Refer to SLOPE Err LO and SLOPE Err HI for assistance in solving calibration slope problems.

bF1 or bF2 continuously flashes during autocalibration

During autocalibration, `bF1` or `bF2` flashes until the pH reading of the sensor in the buffer is stable.

Recommended actions

1. Check the stability limits.
   If the stabilization range (prompt `PH`) is set too narrow or the stabilization time (prompt `tIME`) is set too long, the transmitter will not accept buffer readings. A good choice for `PH` is 0.02, and a good choice for `tIME` is 10 - 20 seconds.

2. Allow adequate time for the temperature of the sensor to reach the temperature of the buffer. If the sensor was in a process substantially hotter or colder than the buffer, allow at least 20 minutes for readings in the buffer to stabilize. Alternatively, place the sensor in a container of water at ambient temperature for 20 minutes before starting the calibration.
3. Be sure to swirl the sensor after placing it in each new buffer solution.
4. Finally, check the sensor. Verify that wiring is correct. Also, the sensor may be dirty or aged, or the reference junction may be depleted.
    a) Check that the sensor is properly wired to the transmitter.

       Pay particular attention to terminals TB-10 (mV in), TB-7 (reference), and TB-8 (solution ground).

    b) Clean the sensor.
    c) If the sensor is not rebuildable, rejuvenate the reference junction.
    d) If the sensor is rebuildable, replenish the reference electrolyte and replace the liquid junction.
    e) Replace the sensor.
       A clean pH sensor should not drift in buffer.

pH reading in buffer drifts during manual calibration

Recommended actions

1. Allow adequate time for the temperature of the sensor to reach the temperature of the buffer. If the sensor was in a process substantially hotter or colder than the buffer, allow at least 20 minutes for readings in the buffer to stabilize. Alternatively, place the sensor in a container of water at ambient temperature for 20 minutes before starting the calibration.
2. Be sure to swirl the sensor after placing it in each new buffer solution.
3. Finally, check the sensor. Verify that wiring is correct. Also, the sensor may be dirty or aged, or the reference junction may be depleted.
    a) Check that the sensor is properly wired to the transmitter.

       Pay particular attention to terminals TB-10 (mV in), TB-7 (reference), and TB-8 (solution ground).

    b) Clean the sensor.
    c) If the sensor is not rebuildable, rejuvenate the reference junction.
    d) If the sensor is rebuildable, replenish the reference electrolyte and replace the liquid junction.
    e) Replace the sensor.
       A clean pH sensor should not drift in buffer.

Sensor does not respond to known pH changes

Recommended actions

1. Verify that the change really happened. If you were checking pH response in buffers, recheck performance with fresh buffers. If a process pH reading was not what was expected, check the performance of the sensor in buffers. Also, use a second pH meter to verify that the expected change in the process pH really occurred.
2. Check the sensor. Verify that wiring is correct. Also, the sensor may be dirty or aged, or the reference junction may be depleted. Check that the sensor is properly wired to the transmitter.

   See Wire. Pay particular attention to terminals TB-10 (mv in), TB-7 (reference), and TB-8 (solution ground).
3. If a clean, properly wired sensor does not respond to pH changes, the glass bulb is probably broken or cracked.
   a) If a spare sensor is available, check the spare.
   If the spare sensor responds to pH changes, the old sensor has failed.

   If the spare sensor does not respond to pH changes, go to Step 4.

   b) If a spare sensor is not available, check the glass impedance (GIMP) of the existing sensor.
   If the impedance is less than about 20 megohm, the pH sensor is cracked. Replace the sensor.

   If the impedance is greater than about 20 megohm, go to Step 4.
4. Check transmitter performance by simulating pH inputs.

   See Testing the transmitter by simulating the pH.

   If the transmitter responds to simulated inputs, the problem must lie with the sensor or the interconnecting wiring. Verify the interconnecting wiring point to point. Fix or replace bad cable. If cable is good, replace pH sensor.

   If the transmitter does not respond to simulated inputs, replace the board stack.

Buffer calibration is acceptable; process pH is slightly different from expected value.

Differences between pH readings made with an on-line instrument and a laboratory or portable instrument are normal. The on-line instrument is subject to process variables (for example, ground potentials, stray voltages, and orientation effects) that do not affect the laboratory or portable instrument.

Buffer calibration is acceptable; process pH is grossly different from expected value

The systems suggest a ground loop (measurement system connected to earth ground at more than one point), a floating system (no earth ground), or noise being induced into the transmitter by a sensor cabling.

The problem arises from the process or installation. It is not a fault of the transmitter. The problem should disappear once the sensor is taken out of the system.

Recommended actions

1. To confirm a ground loop:
   a) Verify that the system works properly in buffers. Be sure there is no direct electrical connection between the buffer containers and the process liquid or piping.
   b) Strip back the ends of a heavy gauge wire. Connect one end of the wire to the process piping or place it in the process liquid. Place the other end of the wire in the container of buffer with the sensor.
      The wire makes an electrical connection between the process and sensor.

   If similar symptoms develop after making the connection, a ground loop exists. If no symptoms develop, a ground loop may or may not exist.
2. Check the grounding of the process.
   The measurement system needs one path to ground: through the process liquid and piping. Plastic piping, fiber glass tanks, and ungrounded or poorly grounded vessels do not provide a path. A floating system can pick up stray voltages from other electrical equipment.
   a) Ground the piping or tank to a local earth ground.
      Metal tees, grounding rings, or grounding rods may be required.
   b) If problems persist, connect a wire from the ground connection at the dc power supply to the transmitter case. Connect a second wire from the transmitter case to the process.
      These connections force the grounds to the same potential.

   If the problem persists, simple grounding is not the problem. The sensor wiring is probably carrying noise into the instrument. Go to Step 3.
3. Simplify the sensor wiring.
   a) Disconnect all sensor wires at the transmitter except: TB-4 (resistance temperature device [RTD] sense), TB-5 (RTD IN), TB-7 (Reference IN), and TB-10 (pH/ORP IN). If you are using a remote preamplifier, disconnect the wires at the input side of the junction box.
   b) Tape back the ends of the disconnected wires, including all shield and drain wires, to keep them from making accidental connections with other wires, terminals, or the transmitter case.
   c) Connect a jumper wire between TB-3 (RTD return) and TB-4 (RTD sense). Connect a second jumper wire between TB-7 (Reference IN) and TB-8 (Solution ground).
   d) Place the sensor back in the process liquid. If diagnostic measures such as `GLASSFAIL` or `REF WArn` appear, turn off the sensor diagnostics.

   If the symptoms disappear, interference was coming into the transmitter along one of the sensor wires. The measurement system can be operated permanently with simplified wiring.

If symptoms still persist, go to Step 4.

4. Check for extra ground connections or reduced noise.

   The electrode system is connected to earth ground through the process. If other ground connections exist, there are multiple paths and ground loops are present. Noise enters the measurement either by a direct connection, usually between the cable and grounded metal, or by an indirect connection, usually EMI/RFI picked up by the cable.

   a) If the sensor cable is run inside conduit, there may be a short between the cable and the conduit. Re-run the cable outside the conduit. If symptoms disappear, then a short exists between the table and the conduit. Likely a shield is exposed and is touching the conduit. Repair the cable and reinstall it in the conduit.

   b) To avoid induced noise in the sensor cable, run it as far away as possible from the power cables, relays, and electric motors. Keep sensor wiring out of crowded panels and cable trays.

   c) Occasionally, noise can travel into the transmitter housing from the metal it is mounted on. The noise is then radiated into the transmitter electronics. If isolating the transmitter from its metal mounting eliminates the symptoms, move the transmitter to a different location or mount it with isolating materials.

   If ground loop problems persist, consult the factory. It may require a visit from an experienced service technician to solve plant-induced problems.

Temperature reading is inaccurate

Recommended actions

1. To troubleshoot temperature problems, refer to tEMP HI and tEMP LO.
2. Calibrate the temperature response of the sensor.
3. If necessary, automatic temperature compensation can be temporarily disabled and the transmitter placed in manual temperature compensation. For manual temperature, choose a temperature equal to the average temperature of the process.
   The resulting pH reading will be in error. The more variable the temperature and the further from pH 7, the greater the error.

HART® communication problems

Recommended actions

1. If the handheld communicator software does not recognize the =transmitter, order an upgrade from Rosemount at 800 999 9307.
2. Be sure the HART load and voltage requirements are met.
   - HART communications requires a minimum 250 ohm load in the current loop.
   - Install a 250 - 500 ohm resistor in series with the current loop. Check the actual resistor value with an ohmmeter.

- For HART communications, the power supply voltage must be at least 18 Vdc.

3. Be sure the HART communicator is properly connected.
   - The communicator leads must be connected across the load.
   - The communicator can be connected across the power terminals (TB-15 and TB-16).
4. Verify that the handheld communicator is working correctly by testing it with another HART Smart device.
   If the communicator is working, the transmitter electronics may have failed. Call Rosemount for assistance.

   If the communicator seems to be malfunctioning, call Rosemount at 800 999 9307 for assistance.

No display

Recommended actions

1. Be sure power requirements are being met.
   a. The positive voltage lead must be connected to TB-16.
   b. Check dc voltage requirements and load restrictions.
2. Check for bad connections between the circuit boards. Be sure the ribbon cable between the display and CPU boards is firmly seated in the socket on the CPU board. Be sure the socket connection between the CPU and analog boards is firm.

Display segments missing

Recommended action

Replace the display board.

Transmitter locks up

Recommended actions

1. Turn the dc power off; then turn it back on.
2. If the problem persists, replace the electronic board stack (HART®: PN 23992-02; FOUNDATION™ Fieldbus: PN 23992-03).

Transmitter periodically restarts itself

Recommended actions

1. The problem is usually related to improperly wired resistance temperature device (RTD) input terminals.
   a) The RTD return wire must be connected to TB-3. The RTD sense wire must be connected to TB-4, and the RTD in wire must be connected to TB-5. If the pH sensor does not have an RTD, connect a jumper wire across the terminals TB-3 and TB-4 and a second jumper across TB-4 and TB-5.

b) If you have jumpered the RTD connections as described in 1.a, turn off automatic temperature compensation and operate the transmitter in manual temperature mode.

2. If RTD wiring is correct and problems still persist:
   a) Monitor the power supply. Be sure the power is not intermittent and the correct voltage is present.
   b) Try connecting the transmitter to a different power supply.

8.2.5 Displaying diagnostic variables

This section describes how to display the diagnostic variables listed below:

Diagnostic measurements

1. Sensor voltage in mv (`InPut`)
2. Glass impedance in megohms (`GIMP`)
3. Reference temperature in kilohms (`rIMP`)(1)
4. Temperature in °C

Diagnostic messages

1. Software version (`VEr`)
2. Display last three fault messages (`ShoW FLt`)

Note
Displays are read only.

Procedure

1. Press **DIAG** on the IRC to enter the ***Diagnostic*** menu.
   Sensor voltage in mV (`InPut`) appears.
2. Press **NEXT**.
   The temperature corrected glass impedance in megohms (`GIMP`) appears.
3. Press **NEXT**.
   The reference impedance (`rIMP`) appears. For conventional low impedance silver/silver chloride reference electrodes, the reference impedance has units of kilohms. For the rare occasions when a high impedance reference is used, the units are megohms.
4. Press **NEXT**.
   The model number and software version (`Ver`) appears.
5. Press **NEXT**.
   The temperature (`tEMP`) measured by the sensor appears.
6. Press **NEXT**.
   The ***ShoW Fit*** submenu appears.

(1) For high impedance reference electrodes, the reference impedance is in megohms.

7. Press **ENTER**.
   The most recent fault message appears in the display.
8. Press **NEXT** repeatedly to scroll through the stored messages.
   The transmitter only remembers the three most recent messages. `nonE` appears if there are no faults. Press **EXIT** to clear all the stored messages and return the transmitter to the ***ShoW Fit*** display. If the transmitter loses power, all stored warnings and fault messages are lost.
9. Press **EXIT** to return to the process display.

8.2.6 Testing the transmitter by simulating the pH

Overview of simulating a pH input

This section describes how to simulate a pH input into the Rosemount 5081-P pH/ORP transmitter. pH is directly proportionsl to voltage.

To simulate the pH measurement, connect a standard millivolt source to the transmitter. If the transmitter is working properly, it will accurately measure the input voltage and convert it to pH. Although the general procedure is the same, the wiring details depend on the location of the preamplifier. Consult the table to find the correct procedure.

Preamplifier located in	Section
Transmitter	Simulate pH when the preamplifier is located in the transmitter
Remote junction box	Simulate pH when the preamplifier is located in a remote junction box or in a sensor-mounted junction box
Sensor-mounted junction box	Simulate pH when the preamplifier is located in a remote junction box or in a sensor-mounted junction box
Sensor	Simulate pH when preamplifier is in sensor

Simulate pH when the preamplifier is located in the transmitter

Procedure

1. Program PAMP to transmitter.
2. Turn off sensor diagnostics.
3. Turn off automatic temperature compensation. Set manual temperature compensation to 77 °F (25 °C).
4. Disconnect the sensor and wire transmitter as shown in Figure 8-5.
5. Attach a jumper between TB-7 (Reference IN) and TB-10 (pH IN).
6. Measure the voltage. Press **DIAG** on the infrared remote control (IRC).
   The InPut voltage in millivolts appears in the temperature-output area. The main display continues to show pH. The measured voltage should be 0 mV, and the pH should be approximately 7. Because the calibration data in the transmitter may be offsetting the input voltage, the displayed pH may not be exactly 7.0. If the actual readings are close to expected, the transmitter is probably operating normally.

7. If a standard millivolt source is available, remove the jumper between TB-7 and TB-10 and connect the voltage source.
8. Calibrate the transmitter. Use 0.0 mV for pH 7 (bF1) and -177.4 mV for pH 10 (bF2). If the transmitter is working, it should accept the calibration.
9. To check linearity, leave autocalibration and return to the main display. Set the voltage source to the values in the table and verify that the pH reading matches the expected value.

Voltage (mV)	pH
295.8	2.00
118.3	5.00
-118.3	9.00
-295.8	12.00

Example

Figure 8-5: pH simulation when the preamplifier is located in the transmitter

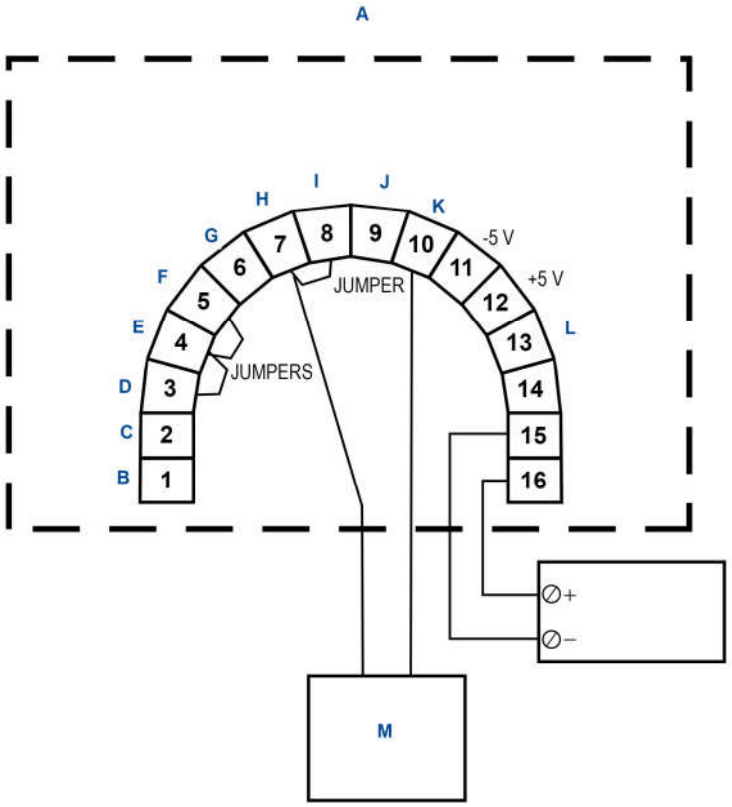

A. Transmitter
B. Earth ground
C. Shield
D. Resistance temperature device (RTD) return
E. -RTD sense
F. RTD in
G. Reference ground
H. Reference in
I. Solution ground
J. pH guard
K. pH in
L. +RTD sense
M. mV source

Simulate pH when the preamplifier is located in a remote junction box or in a sensor-mounted junction box

Procedure

1. Program PAMP to sensor.

2. Turn off sensor diagnostics.
3. Turn off automatic temperature compensation. Set manual temperature compensation to 77 °F (25 °C).
4. Disconnect the sensor and wire the sensor side of the junction box as shown in Figure 8-5. Leave the interconnecting cable between the junction box and transmitter in place.
5. Attach a jumper between TB1-7 (Reference IN) and TB1-10 (pH IN)
6. From this point on, continue with steps 6 through 9 in Simulate pH when the preamplifier is located in the transmitter.

   For testing using a standard millivolt source. Be sure to remove the jumper between TB1-7 and TB1-10 before connecting the standard millivolt source.

Example

Figure 8-6: pH simulation when the preamplifier is located in a remote junction box or in a sensor mounted junction box

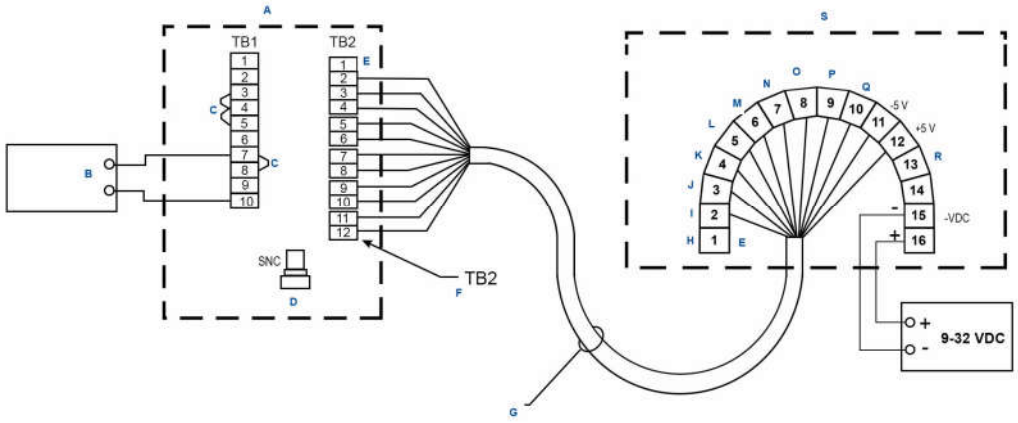

A. Remote junction box: PN 23555-00 (includes preamplifier). Board PN 23557-00
B. mV source
C. Jumpers
D. No connection
E. Normally closed
F. Far side
G. Extension cable point to point wiring terminals 2 to 12
H. Earth ground
I. Shield
J. Resistance temperature device (RTD) return
K. -RTD sense
L. RTD in
M. Reference ground
N. Solution ground
O. pH guard
P. pH in
Q. +RTD sense
R. Transmitter

Simulate pH when preamplifier is in sensor

The preamplifier in the sensor simply converts the high impedance signal into a low impedance signal without amplifying it.

8.3 Contacting and toroidal conductivity diagnostics and troubleshooting

8.3.1 Diagnose menu

The transmitter automatically monitors for fault conditions. The ***Diagnose*** menu displays current variable settings and fault messages. The messages are defined in Table 8-2.

Troubleshoot contacting conductivity analyzers

Procedure

1. Look for a diagnostic fault message on the display to help pinpoint the problem.
   Refer to Diagnostic messages for an explanation of the message recommended actions to solve it.
2. Refer to Troubleshooting when no diagnostic message is showing for common loop problems and the recommended actions to resolve them.

Display diagnostic values

Use the **DIAG** key on the IRC is used to access the ***Diagnose*** menu. The messages are defined in Table 8-2.

Use the ***FAuLtS*** submenu to show the last three faults/warnings. The most recent is displayed first. Use **NEXT** to scroll through the remaining faults. Press **EXIT** to clear all fault/warnings and returns the ***FAuLtS*** segment. Disconnecting the transmitter removes all fault messages from memory. The `nonE` message is displayed when no faults/warnings have occurred.

Table 8-2: Diagnostic variables mnemonics

AbS	Absolute conductivity (µS/cm or mS/cm)
0 A ir	Sensor zero in air
CELL ConSt	Sensor cell constant (used in C mode)
tSLOPE	Temperature slope in %/° C
CAL F	Calibration factor
SoFt	Software version
HArd	Hardware version
FAuLtS	Show fault messages
nonE	No fault messages in memory

8.3.2 Fault conditions

The diagnostic program detects and diffentiates three classes of error conditions/ problems. System disabling problems are faults caused by failures in the loop or significant variations in the process. System non-disabling problems are warnings and deal with input or A to D conversion settings. The third class of detection problems are error messages and occur when the calibration limits are exceeded.

Disabling faults

When a disabling fault occurs:

1. Both FAULT and HOLD annunciation fields become active (Figure 8-7).
2. The process variable flashes at the rate of 1 second on and 1 second off.
3. The appropriate fault message alternates with the normal Temperature/Current output display (see Figure 8-7).
4. The output current loop is forced to run the non-zero fault value last entered or held at last value if fault value = 0 if the transmitter is not in the TEST, HOLD, or Multidrop operational modes.
5. A 0-1 mA output signal is available for external use when system disability conditions are active. These conditions drive this output to 1 mA. Please contact factory for specific application information.

Figure 8-7: Disabling Fault Annunciation



Non-disabling warnings

When a non-system-disabling condition occurs, a warning message is displayed.

The process variable does not flash. The appropriate message alternates with the Temperature/Current output display (see Figure 8-8).

If more than one fault exists, the display will sequence through each diagnostic message. This will continue until the cause of the fault has been corrected.

Figure 8-8: Warning Annunciation

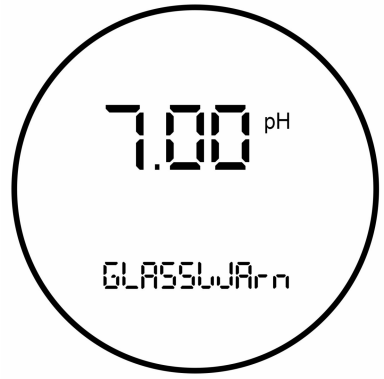

8.3.3 Diagnostic messages

The transmitter's diagnostics constantly monitor the conductivity loop for possible problems. If an operational problem is encountered, check the display for a fault or error message. These are displayed in the ***Temperature/Current output*** segment of the display. Note the message and refer to the following sections for a description of possible problems that may have triggered the diagnostic message.

Faults

tEmP LO

Temperature is too low.

Recommended actions

1. Check wiring or sensor/process temperature.
2. Check resistance temperature device (RTD).

tEmP HI

Temperature is too high.

Recommended actions

1. Check wiring or sensor/process temperature.
2. Check resistance temperature device (RTD).

rtd FAIL

The resistance temperature device (RTD) sensor line fault limits have been exceeded into the sensor.

Recommended action

Check wiring or check ***Program/Temp*** menu setting to verify the 100-3 or 100-4 sensor type connected.

CPU FAIL

The CPU has failed during RAM or EEPROM verification.

Recommended action

Recycle. If persistent, contact the factory.

FACt FAIL

`FACt FAIL` appears if the transmitter factory calibration message has been triggered.

A stray noise spike can cause this message to appear.

Recommended actions

1. If the pH reading seems acceptable, reset the calibration flag.
   a) Press **2** on the infrared remote control (IRC) ten times to enter the ***factory calibration*** menu.
   The display does not change.
   b) Press **3**.
   `FActorYCAL` appears in the display.
   c) Press **NEXT**.
   `rEPAir` appears in the display.
   d) Press **NEXT**.
   `ConFIG` appears in the display.
   e) Press **NEXT**.
   `rESEt` appears in the display.
   f) Press **NEXT**.
   `rESEtCFG` appears in the display.
   g) Press **ENTER**.
   `rESET` appears again.
   h) Press **NEXT**.
   `FActorYCAL` reappears.
   i) Press **ENTER**.
   `FactOn` appears in the display.
   j) Press **3**.
   `FactOFF` appears.
   k) Press **ENTER** to store the settings.
   l) Press **EXIT** repeatedly until the main display reappears.

   If the message does not clear or problems persist, the electronics have failed. Replace the electronic board stack.
2. Contact factory.

rOm FAIL

The PROM failed the check-sum test.

Recommended action

Contact factory.

CyCLE PoWr

A wrong value was detected during power-up.

Recommended action

Recycle the power.

SEnSor FAIL

Bad sensor means that the sensor current is a large negative number. `SEnSor FAIL` may appear for a while when the sensor is first placed in service.

Recommended actions

1. Observe the sensor. Go to SEnSor Cur under the ***Diagnostic*** menu.
   If the sensor is moving in the positive direction, there is probably nothing wrong. The error message should soon disappear.
2. Verify that wiring is correct. Pay particular attention to the anode and cathode connections.
3. Verify that the transmitter is configured for the correct measurment.

   Configuring the measurement sets several things, including the polarizing voltage. Applying the wrong polarizing voltage to the sensor can cause a negative current.
4. Replace the sensor membrane and electrolyte solution and clean the cathode if necessary.

   See the sensor reference manual for details.
5. Replace the sensor.

Warnings

InPUt WArn

`InPUt WArn` means that the input value or the calculated pH is outside the measurement range. The measured pH is less than -2 or greater than 16.

Recommended actions

1. Check for miswires and open connections, particularly at TB-10. Open connections can be caused by loose connections, poor spade crimps, or broken wires. Be sure to check junction boxes for proper pass through of all wires.
   - If correcting a wiring problem clears the message, the system is in good condition.
   - If the message is still showing, go to Step 2.
2. Check that the transmitter is working properly by simulating a pH input. See Testing the transmitter by simulating the pH.
   - If the transmitter does not respond to simulated inputs, replace the board stack.

- If the transmitter performs satisfactorily and the preamplifier is located in a remote junction box or in a sensor-mounted junction box, go to Step 3.
- If the transmitter performs properly and the preamplifier is located in the transmitter, the sensor has failed and should be replaced.

3. The problem may lie with the remote preamplifier or with the cable connecting the preamplifier and junction box to the transmitter.
   a) Be sure all wires between the junction box and transmitter are connected.
   b) Use Rosemount cable.
      Generic cable may not work.

- If the disagnostic message clears, the interconnecting cable was the problem.
- If the message remains, go to Step 4.

4. Confirm that the problem is with the remote preamplifier.
   a) Wire the pH sensor directly to the transmitter.
   b) Change the menu from PAMP=SnSr to trAnS for the test and return it to SnSr afterwards.

- If the error message clears, the remote preamplifier is faulty. Replace the preamplifier.
- If the error message remains, the sensor has failed. Replace the sensor.

OvEr rAnGE and AMP FAIL

The current range setting has been exceeded or the measurment exceeds the display limit.

This error message appears if the sensor current is too high. Normally, excessive sensor current implies that the sensor is miswired or the sensor has failed.

Recommended actions

1. Verify the 4 and 20 mA settings in the ***Program/output*** menu.
2. Verify that the wiring is correct and connections are tight. Be sure to check connections at the junction box if one is being used.
3. Replace the sensor membrane and electrolyte solution and clean the cathode if necessary.
   See the sensor reference manual for details.
4. Replace the sensor.

AdC Error

`AdC Error` means the analog to digital converter has failed.

Recommended actions

1. Verify that the sensor wiring is correct and connections are tight.
   Be sure to check connections at the junction box if one is being used.
2. Disconnect sensor(s) and simulate temperature and sensor input.

If the transmitter does not respond to simulated signals, the analog PCB has probably failed.

3. Recycle the power.
4. Call the factory for assistance.

nEEd 0 CAL

The message `nEEd 0 CAL` means that the concentration of the analyte is too negative.

Recommended actions

1. Check the zero current (go to `0 CurrEnt` under the ***Diagnose*** menu).
   If the zero current is appreciably greater than the measurement current, the `nEEd 0 CAL` warning appears.
2. Verify that the zero current is close to the value given in the calibration section for the analyte being determined.
3. Rezero the sensor.
   Refer to the calibration and troubleshooting sections of the sensor reference manual for more information.

Errors

CAl Err or OFFSEt Err

A calibration error has occurred between the standard and process.

Recommended action

Press **RESET** and repeat. Check calibration standards and unit configuration.

tSLOPE Err

The limit for T-2 in a two point calibration has been exceeded.

Recommended action

Press **RESET** and repeat the ***calibration/temp. slope*** menu setting.

-0- Err

Sensor zero limit has been exceeded.

Recommended actions

Press ***RESET*** and repeat the ***calibrate/sensor*** menu setting.

WritE Err

An attempt to write on the EEPROM has failed.

The jumper JP-1 on the CPU board has been removed.

SenSE OPEn

Most Rosemount sensors use a Pt100 or Pt1000 in a three-wire configuration. The in and return leads connect the resistance temperature device (RTD) to the measuring circuit in the transmitter. A third wire, called the sense line, is connected to the return lead. The

sense line allows the transmitter to correct for the resistance of the in and return leads and to correct for changes in lead wire resistance with changes in ambient temperature.

Recommended actions

1. Verify all wiring connections, including wiring in a junction box if one is being used.
2. Disconnect the RTD SENSE and RTD RETURN wires. Measure the resistance between the leads.

   It should be less than 5 Ω.
3. If the sense line is open, replace the sensor as soon as possible.

   The transmitter can be operated with the sense line open. The measurement will be less accurate, because the transmitter can no longer compensate for lead wire resistance. However, if using the sensor at approximately constant ambient temperatures, you can eliminate the lead wire resistance error by calibrating the sensor to the measurement temperature. Errors caused by changes in ambient temperature cannot be eliminated.
4. To make the error message disappear, connect the RTD SENSE and RETURN terminals with a jumper.

8.3.4 Troubleshooting when no diagnostic message is showing

The following sections identify some of the more common symptoms and suggest actions to help resolve a problem. In general, wiring is the most common cause.

Wrong temperature reading

Recommended actions

1. Perform a temperature standardization.
2. Verify sensor's resistance temperature device (RTD).

Suspected temperature compensation problem

Recommended action

Check wiring.

Display segments missing

Recommended action

Replace the display board.

Transmitter locks up

The transmitter won't respond

Recommended actions

1. Replace PCB stack.

2. Press **RESET**.
3. Check batteries in infrared remote control (IRC).

Erratic displays

Recommended action

Check sensors in process.

Transmitter won't respond to infrared remote control (IRC) key presses

Recommended actions

1. Verify and clean ribbon cable connection on CPU board.
2. Check batteries in IRC.

Key press gives wrong selection

Recommended actions

1. Replace infrared remote control (IRC).
2. Check ribbon cable connection on CPU board.

Wrong or no current output

Recommended actions

1. Verify that output is not being overloaded.
2. Remove load.
3. Replace PCB stack.

No display or indicators

Recommended action

Replace PCB stack.

Excess input

Recommended action

Check sensor wiring.

Reverse input

Recommended action

Perform sensor zero.

Check sensor zero

The transmitter will not zero.

Recommended action

Place the sensor in the air and access zero routine.

8.3.5 Troubleshoot in the field

When it is apparent by grab sample analysis that the transmitter is giving inaccurate readings, try the following:

Prerequisites

Make sure the sensor surfaces are totally wetted by the process and that air bubbles are not trapped in the vicinity of electrodes. If you find air bubbles, change the installation technique to eliminate air bubbles.

Procedure

1. Visually inspect the installation.
   a) Check that the transmitter is mounted securely and that its internal parts are properly connected.
   b) Check all input and output wiring.
2. If Step 1 did not indicate the source of the problem, isolate the problem to either the transmitter or the sensor.
3. To troubleshoot the sensor:
   a) Disconnect the sensor from the transmitter.
   b) Remove the sensor from the process.
   c) Thoroughly dry the sensor electrodes.

   Refer to the sensor reference manual for additional troubleshooting checks.
4. To troubleshoot the transmitter independently of the sensor, use an appropriate resistor across the temperature input connectors and connect the conductivity inputs to resistance decade box.

8.3.6 Troubleshoot conductivity measurement

If troubleshooting in the field does not resolve the error, try the following procedure to troubleshoot a conductivity measurement problem in the process.

Note
Before starting this procedure, make sure that all wiring is correct.

Procedure

1. Remove the sensor from process and place the sensor in air. Zero the transmitter.
   This step is for normal contacting only, not for low conductivity or resistivity.
   If the transmitter zeros correctly, place the sensor in the process and standardize.
2. If the transmitter does not zero correctly:
   a) Check diagnostic messages.
      Refer to Diagnostic messages.

b) Check wiring for short.

c) Consult service center.

3. If the sensor does not standardize:
   a) Remove the sensor from the process and test it in a known conductivity solution or against a certified conductivity instrument.
   b) Check for ground loops and/or improper installation.

8.3.7 Resistance temperature device (RTD) resistance values

Table 8-3 is a ready reference of RTD resistance values at various temperatures. Use these values to test and evaluate the sensor.

Note
Resistance values are read across the RTD element and are based on the manufacturer's stated values (±1%). Allow enough time for the RTD element in the sensor to stabilize to the surrounding temperature.

Table 8-3: RTD Resistance Values

Temperature	Pt-100 resistance (ohms)	Pt-1000 resistance (ohms)
32 °F (0 °C)	100.00	1000
50 °F (10 °C)	103.9	1039
68 °F (20 °C)	107.79	1078
77 °F (25 °C)	109.62	1096
86 °F (30 °C)	111.67	1117
104 °F (40 °C)	115.54	1155
122 °F (50 °C)	119.40	1194
140 °F (60 °C)	123.24	1232
158 °F (70 °C)	127.07	1271
176 °F (80 °C)	130.89	1309
194 °F (90 °C)	134.70	1347
212 °F (100 °C)	138.50	1385

Figure 8-9: Conductivity Determination

Formula:

$$\frac{\text{cell constant value x } 1{,}000{,}000}{\text{desired simulated conductivity in } \mu\text{S/cm}} = \text{resistance in ohms}$$

Example:

$$\frac{.01 \text{ x } 1{,}000{,}000}{10\ \mu\text{S/cm}} = \text{use } 1{,}000 \text{ ohm resistance}$$

Use the formula to determine the appropriate resistance value to use to simulate a conductivity value.

8.4 Chlorine, dissolved oxygen, and ozone diagnostics

8.4.1 Diagnostics overview

The Rosemount 5081 transmitter can display diagnostic information that is useful in troubleshooting. The diagnostics available depend on the measurement being made. To read diagnostic information, go to the main display and press **DIAG** on the infrared remote controller. Press **NEXT** until the desired diagnostic message appears. Refer to the appropriate section below for more information.

8.4.2 Diagnostic messages for dissolved oxygen

Message	See section
TYPE O2	TYPE O2
SEnSor Cur	SEnSor Cur
SEnSitvtY	SEnSitviTY
0 CurrEnt	0 CurrEnt.
bAr PreSS	bAr PreSS.
5081-A-Ht	5081-A-Ht.
FAULtS	FAULtS

TYPE O2

Transmitter is measuring oxygen.

Recommended action

Press **NEXT** to view diagnostics.

SEnSor Cur

Recommended action

Press **ENTER** to display raw current from sensor.

SEnSitviTY

Sensitivity is calculated during calibration. It is the measured current divided by the concentration.

Recommended action

Press **ENTER** to display sensitivity.

0 CurrEnt

Recommended actions

1. Press **ENTER** to display the zero current measured during calibration.
2. Note units.

bAr PreSS

Recommended action

Press **ENTER** to display the barometric pressure used by the transmitter during air calibration.

5081-A-Ht

This is the model number.

Recommended actions

1. Press **ENTER** to display the software revision level (`SFtr`).
2. Press **NEXT** to show the hardware revision level (`HArdr`).

FAULtS

Recommended action

Press **ENTER** to scroll through existing fault messages.

8.4.3 Diagnostic messages for ozone and total chlorine

Message	See section
TYPE O3 or tCL	TYPE O3 or TYPE tCL
SEnSor Cur	SEnSor Cur

Message	See section
SEnSitvtY	SEnSitviTY
0 CurrEnt	0 CurrEnt
5081-A-Ht	5081-A-Ht
FAULtS	FAULtS

TYPE O3 or TYPE tCL

The transmitter is measuring ozone or total chlorine.

Recommended actions

Press **NEXT** to view diagnostics.

8.4.4 Diagnostic messages for free chlorine

Message	See section
TYPE FCL	TYPE FCL
SEnSor Cur	SEnSor Cur
SEnSitvtY	SEnSitviTY
0 CurrEnt	0 CurrEnt
pH	pH
InPut	InPut
SLOPE	SLOPE
OFFSt	OFFSt
GIMP	GIMP
5081-A-Ht	5081-A-Ht
FAULtS	FAULtS

TYPE FCL

Transmitter is measuring free chlorine.

Recommended action

Press **NEXT** to view diagnostics.

pH

Recommended actions

1. Press **ENTER** to view pH diagnostics.
2. Press **NEXT** to skip pH diagnostics.

InPut

Current pH sensor input voltage in millivolts.

SLOPE

Sensor slope in millivolts per unit pH. Slope is calibrated during buffer calibration.

OFFSt

Sensor voltage in millivolts in pH 7 buffer.

GIMP

Glass impedance in MΩ.

8.5 Chlorine, dissolved oxygen, and ozone troubleshooting

8.5.1 Troubleshooting fault or warning messages

Message	Explanation	See section
OvEr rAnGe	Over range, measurement exceeds display limit.	OvEr rAnGE and AMP FAIL
AMP FAIL	Amperometric sensor failure, sensor current is too high.	OvEr rAnGE and AMP FAIL
bAd SEnSor	Bad sensor, sensor current is a large negative number.	bAd SEnSor
0 too biG	Zero current is too large, sensor was zeroed while current exceeded 100 nA.	0 too bIG
CAL Error	Calibration error, sensitivity (nA/ppm) is too high or too low.	CAL Error
nEEd 0 CAL	Sensor needs re-zeroing; reading is too negative.	nEEd 0 CAL
bAd rtd	Bad temperature reading.	bAd rtd and rtd OPEn
TEMP HI	Temperature reading exceeds 302 °F (150 °C).	tEmP HI
TEMP LO	Temperature reading is less than 5 °F (-15 °C).	tEmP LO.
rtd OPEn	Resistance temperature device (RTD) or thermistor is open.	bAd rtd and rtd OPEn
SenSE OPEn	Sense line is not connected.	SenSE OPEn
PH in	Raw millivolt reading from pH sensor is too large.	pH IN

Message	Explanation	See section
SLOPE HI	pH sensor slope exceeds 62 mV/pH.	SLOPE Err HI
SLOPE LO	pH sensor slope is less than 40 mV/pH.	SLOPE Err LO
-0- OFFSEt	Zero offset during standardization exceeds programmed limit.	-0- OFFSEt
GLASSFAIL	Measured glass impedance is less than programmed limit.	GLASSFAIL
FACt FAIL	Unit has not been factory calibrated.	FACt FAIL
CPU FAIL	Internal CPU tests have failed.	CPU FAIL
ROM FAIL	Internal memory has failed.	rOm FAIL
AdC	Analog to digital conversion failed.	AdC Error
bAd Gnd	Bad ground.	bAd Gnd
In too biG	mV signal from pH sensor is too large.	In too biG
RitE Err	CPU PCB jumper (JP-1) has been removed.	RitE Err

bAd SEnSor

Bad sensor means that the sensor current is a large negative number. `bAd SEnSor` may appear for a while when the sensor is first placed in service. Observe the sensor current by going to SEnSor Cur under the ***Diagnostic*** menu. If the sensor current is moving in the positive direction, there is probably nothing wrong, and the error message should soon disappear.

Recommended actions

1. Verify that wiring is correct. Pay particular attention to the anode and cathode connections.
2. Verify that the transmitter is configured for the correct measurement.

   Configuring the measurement sets (among other things) the polarizing voltage. Applying the wrong polarizing voltage to the sensor can cause a negative current.
3. Replace the sensor membrane and electrolyte solution and clean the cathode if necessary.

   See the sensor reference manual for details.
4. Replace the sensor.

0 too bIG

Normally, the transmitter will not accept a zero current until the current has fallen below a reasonable value. See the calibration section of the appropriate sensor reference manual for the analyte being determined for zero currents. However, you can force the transmitter to accept the present current as the zero value. The `0 too bIG` warning appears if the current at the time the sensor is zeroed is greater than 100 nA. Because the transmitter subtracts the zero current from the measured current before converting the result to a concentraiton, zeroing too soon will cause readings to be too low.

Procedure

1. Allow adequate time, possibly as long as overnight, for the sensor to stabilize before starting the zero routine.
2. Verify that the solution used for zeroing the sensor contains no analyte.

   Refer to the calibration section of the appropriate sensor reference manual for details.
3. Replace the sensor membrane and electrolyte solution and clean the cathode if necessary.

   See the appropriate sensor manual for details.
4. Replace the sensor.

CAL Error

At the end of the calibration step, the transmitter calculates the sensitivity in nA/ppm. If the sensitivity is outside the range normally expected, the transmitter displays the CAL Error message, and the transmitter does not update the calibration. For assistance, refer to the troubleshooting section specific to the sensor.

bAd rtd and rtd OPEn

These messages usually mean that the resistance temperature device (RTD) (or themistor in the case of the Rosemount Hx438sensor) is open or shorted or there is an open or short in the connecting wiring.

Recommended actions

1. See Simulate temperature.
2. Verify all wiring connections, including wiring in a junction box if one is being used.
3. Disconnect the RTD IN, RTD SENSE, and RTD RETURN leads or the thermistor leads at the transmitter. Note the color of the wire and where it was attached. Measure the distance between the RTD IN and RETURN leads. For a thermistor, measure the resistance between the two leads. The resistance should be close to the value in Table 8-4. If the temperature element is open or shorted, replace the sensor. In the meantime, use manual temperature compensation.

pH IN

`pH In` means the voltage from the pH measuring cell is too large.

Recommended actions

1. Verify all wiring connections, including connections in a junction box.
2. Check that the pH sensor is completely submerged in the process liquid.
3. Check the pH sensor for cleanliness. If the sensor looks fouled or dirty, clean it.

   Refer to the sensor reference manual for cleaning procedures.
4. Replace the sensor.

-0- OFFSEt

The `-0- OFFSEt` message appears if the standardization offset (in mV) exceeds the programmed limit. The default limit is 60 mV, which is equivalent to about a unit change in pH. Before increasing the limit to make the `-0- OFFSEt` message disappear, check the following:

Recommended actions

1. Verify that the reference pH meter is working properly and is properly calibrated.
2. Verify that the process pH sensor is working. Check its response in buffers.
3. If the transmitter is standardized against pH determined in a grab sample, be sure to measure the pH before the temperature of the grab sample changes more than a few degrees.
4. Verify that the process sensor is fully immersed in the liquid.

   If the sensor is not completely submerged, it may be measuring the pH of the liquid film covering the sensor. The pH of this film may be different from the pH of the bulk liquid.
5. Check the pH sensor for cleanliness. If the sensor looks fouled or dirty, clean it.

   Refer to the sensor reference manual for cleaning procedures.A large standardization offset may be caused by a poisoned reference electrode. Poisoning agents can cause the pH to be offset by as much as two pH units. To check the reference voltage, see Measuring reference voltage.

bAd Gnd

`bAd Gnd` usually means a problem with the analog PCB.

Recommended action

Contact the factory.

In too biG

`In too biG` means the raw millivolt signal from the pH sensor is too large.

Recommended actions

1. Verify that sensor wiring is correct and connections are tight. Be sure to check connections at the junction box if one is being used.
2. Replace the pH sensor with a sensor known to be working.
3. If replacing the pH sensor does not cause the message to disappear, call the factory for assistance.

RitE Err

Cause

CPU PCB jumper (JP-1) has been removed.

Recommended action

Reinsert the JP-1 jumper into the CPU board.

8.5.2 Oxygen measurement and calibration problems

Problem	See section
Zero current is too high.	Zero current too high
Zero reading is unstable.	Zero reading unstable
Sensor current during air calibration is substantially different from expected.	Sensor current outside range
Process and standard instrument readings during in-process calibration are substantially different.	Process and standard readings different
Process readings are erratic.	Process readings erratic
Readings drift.	Readings drift
Sensor does not respond to changes in oxygen level.	Sensor does not respond to changes in oxygen level
Readings are too low.	Oxygen readings are too low

Zero current too high

The zero current is substantially greater than the values in the table below.

Sensor	Zero current
Rosemount 499ADO	< 50 nA
Rosemount 499ATrDO	< 5 nA
Rosemount Hx438	< 1 nA

Recommended actions

1. Make sure the sensor is properly wired to the transmitter.
2. Make sure the membrane is completely covered with zero solution and that air bubbles are not trapped against the membrane. Swirl and tap the sensor to release air bubbles.
3. Make sure the zero solution is fresh and properly made. Zero the sensor in a solution of five percent sodium sulfite in water. Prepare the solution immediately before use.

   It has a shelf life of only a few days.
4. If you are zeroing the sensor with nitrogen gas, verify that the nitrogen is oxygen-free and the flow is adequate to prevent back-diffusion of air into the chamber.
5. The major contributor to the zero current is dissolved oxygen in the electrolyte solution inside the sensor. A long zeroing period usually means that an air bubble is trapped in the electrolyte. To ensure that the Rosemount 499ADO or 499ATrDO sensor contains no air bubbles, carefully follow the procedure in the appropriate

sensor reference manual for filling the sensor. After replacing the electrolyte solution, allow several hours for the zero current to stabilize.

On rare occasions, the sensor may need 24 hours to zero.

6. Check the membrane for damage and replace the membrane if necessary.

Zero reading unstable

Recommended actions

1. Make sure the sensor is properly wired to the transmitter and that all wiring connections are tight.
2. Readings are often erratic when a new or rebuilt sensor is first placed in service. Wait an hour for the readings to stabilize.
3. Make sure that the space between the membrane and the cathode is filled with electrolyte solution and that the flow path between the electrolyte reservoir and the membrane is clear. Hold the sensor with the membrane end pointing down and sharply shaking the sensor a few times as though shaking down a clinical thermometer.
4. If shaking does not work, try the following:
   a) For Rosemount 499ADO and 499ATrDO sensors, verify that the holes at the base of the cathode stems are open (use a straightened paper clip to clear the holes). Also verify that air bubbles are not blocking the holes. Fill the reservoir and establish electrolyte flow to the cathode.

      Refer to the sensor reference manual for the detailed procedure.

   b) For Rosemount Hx438 sensors, add fresh electrolyte solution to the sensor.

      Refer to the sensor reference manual for details.

Sensor current outside range

The sensor current is different from the numbers in the table below.

Sensor	nA/ppm
Rosemount 499ADO	1800 - 3100
Rosemount 499ATrDO	3600 - 6100
Rosemount Hx438	4.8 - 9.8

Recommended actions

1. Make sure the sensor is properly wired to the transmitter and that all connections are tight.
2. Make sure the membrane is dry.

   The membrane must be dry during air calibration. A droplet of water on the membrane during air calibration will lower the sensor current and cause an inaccurate calibration.
3. If the sensor current in the air is very low and the sensor is new, either the electrolyte flow has stopped or the membrane is torn or loose.

For instructions on how to restart electrolyte flow, see Zero reading unstable or refer to the sensor reference manual. To replace a torn membrane refer to the sensor reference manual.

4. Check the temperature.

   Sensor current is a strong function of temperature. The sensor current decreases about 3% for every 1 °C drop in temperature.

5. Check if the membrane is fouled or dirty. A dirty membrane inhibits diffusion of oxygen through the membrane, reducing the sensor current. Clean the membrane by rinsing it with a stream of water from a wash bottle or by gently wiping the membrane with a soft tissue. If cleaning the membrane does not improve the sensor response, replace the membrane and electrolyte solution. If necessary, polish the cathode.

   See the sensor reference manual for more information.

Process and standard readings different

This error warning appears if the current process reading and the reading it is being changed to (i.e., the reading from the standard instrument) are appreciably different.

Recommended actions

1. Make sure the standard instrument is properly zeroed and calibrated.
2. Make sure the standard and process sensor are measuring the same sample. Place the sensors as close together as possible.
3. Make sure the process sensor is working properly. Check the response of the process sensor in air and in sodium sulfite solution.

Process readings erratic

Readings are often erratic when a new sensor or a rebuilt sensor is first placed in service. The current usually stabilizes after a few hours.

Recommended actions

1. Make sure the sample flow is within the recommended range.

   High sample flow may cause erratic readings. Refer to the sensor reference manual for flow rates.

2. Make sure gas bubbles are not impinging on the membrane. Orient the sensor at an angle away from the vertical to reduce the noise.
3. Make sure the holes between the membrane and electrolyte reservoir might be plugged (applies to Rosemount 499ADO and 499ATrDO sensors only).

   Refer to Zero reading unstable.

4. Verify that wiring is correct. Pay particular attention to shield and ground connections.
5. Make sure the membrane is in good condition and the sensor is filled with electrolyte solution. Replace the fill solution and electrolyte.

   Refer to the sensor reference manual for details.

Readings drift

Recommended actions

1. See if the sample temperature is changing.

   Membrane permeability is a function of temperature. For the Rosemount 499ADO and 499ATrDO sensors, the time constant for a response to a temperature change is about five minutes. Therefore, the reading may drift for a while after a sudden temperature change. The time constant for Rosemount Hx438 sensors is much shorter; these sensors respond fairly rapidly to temperature changes.

2. Make sure the membrane is clean.

   For the sensor to work properly oxygen must diffuse freely through the membrane. A coating on the membrane will interfere with the passage of oxygen, resulting in a slow response.

3. Move the sensor out of direct sunlight.

   If the sensor is in direct sunlight during air calibration, readings drift as the sensor warms up. Because the temperature reading lags the true temperature of the membrane, calibrating the sensor in direct sunlight may introduce an error.

4. Make sure the sample flow is within the recommended range.

   Gradual loss of sample flow will cause downward drift.

5. See if the sensor is new or has recently been serviced.

   New or rebuilt sensors may require several hours to stabilize.

6. Check if the reagent flow is about 0.2 mL/min.

Sensor does not respond to changes in oxygen level

Recommended actions

1. If you are comparing readings with a portable laboratory instrument, verify that the laboratory instrument is working.
2. See if the membrane is clean. Clean the membrane and replace it as necessary. Check that the holes at the base of the cathode stem are open. Use a straightened paper clip to clear blockages. Replace the electrolyte solution.
3. Replace the sensor.

Oxygen readings are too low

Potential cause

Low readings can be caused by zeroing the sensor before the residual current has reached a stable minimum value. Residual current is the current the sensor generates even when no oxygen is in the sample. Because the residual current is subtracted from subsequent measured currents, zeroing before the current is a minimum can lead to low results.

Example: The true residual (zero) current for a Rosemount 499ADO sensor is 0.05 µA, and the sensitivity based on calibration in water-saturated air is 2.35 µA/ppm. Assume the measured current is 2.00 µA. The true concentration is (2.00 - 0.05)/2.35 or 0.83 ppm. If the sensor was zeroed prematurely when the current was 0.2 µA, the measured concentration will be (2.00 - 0.02)/2.35 or 0.77 ppm. The error is 7.2%. Suppose the

measured current is 5.00 µA. The true concentration is 2.11 ppm, and the measured concentration is 2.05 ppm. The error is now 3.3%. The absolute difference between the readings remains the same, 0.06 ppm.

Recommended action

Sensor response depends on flow. If the flow is too low, readings will be low and flow sensitive. Verify that the flow past the sensor equals or exceeds the minimum value. See the sensor reference manual for recommended flows. If the sensor is in an aeration basin, move the sensor to an area where the flow or agitation is greater.

8.5.3 Free chlorine measurement and calibration problems

Problem	See section
Zero current is substantially outside the range -10 to 10 nA.	Zero current outside range
Zero reading is unstable.	Zero reading unstable
Sensor current during calibration is substantially less than about 350 nA/ppm at 25 °C (77 °F) and pH 7.	Sensor current too low
Process readings are erratic.	Process readings erratic
Readings drift.	Readings drift
Sensor does not respond to changes in chlorine level.	Sensor not responding to chlorine changes
Chlorine reading spikes following rapid change in pH (automatic pH correction only).	Chlorine readings spike
Readings are too low.	Chlorine readings too low

Zero current outside range

The zero current is substantially outside the range: -10 to 10 nA.

Recommended actions

1. Make sure the sensor is properly wired to the transmitter.
2. Make sure the zero solution is chlorine-free. Take a sample of the solution and test it for free chlorine level.

   The concentration should be less than 0.02 ppm.
3. Make sure you have allowed adequate time for the sensor to reach a minimum stable residual current.

   It may take several hours, sometimes as long as overnight, for a new sensor to stabilize.
4. Check the membrane for damage and replace if necessary.

Zero reading unstable

Recommended actions

1. Make sure the sensor is properly wired to the transmitter and that all wiring connections are tight.
2. Readings are often erratic when a new or rebuilt sensor is first placed in service. Wait an hour for the readings to stabilize.
3. Make sure that the space between the membrane and the cathode is filled with electrolyte solution and that the flow path between the electrolyte reservoir and the membrane is clear. Hold the sensor with the membrane end pointing down and sharply shaking the sensor a few times as though shaking down a clinical thermometer.
4. If shaking does not work, try the following:
   a) For Rosemount 499ADO and 499ATrDO sensors, verify that the holes at the base of the cathode stems are open (use a straightened paper clip to clear the holes). Also verify that air bubbles are not blocking the holes. Fill the reservoir and establish electrolyte flow to the cathode.

      Refer to the sensor reference manual for the detailed procedure.

   b) For Rosemount Hx438 sensors, add fresh electrolyte solution to the sensor.

      Refer to the sensor reference manual for details.

Sensor current too low

The sensor current during calibration is substantially less than 250 nA/ppm at 77 °F (25 °C).

Recommended actions

1. Check to see if the temperature is low or the pH is high.

   Sensor current is a strong function of pH and temperature. The sensor current decreases about 3% for every °C drop in temperature. Sensor current also decreases as pH increases. Above pH 7, a 0.1 unit increase in pH lowers the current about 5%.

2. Check the rate of the sample flow.

   Sensor current depends on the rate of sample flow past the sensor tip. If the flow is too low, chlorine readings will be low. Refer to the sensor reference manual for recommended sample flows.

3. Check the electrolyte flow to the cathode and membrane.

   See step 3 in Zero reading unstable

4. Check if the membrane is fouled or coated. A dirty membrane inhibits diffusion of free chlorine through the membrane, reducing the sensor current and increasing the response time. Clean the membrane by rinsing it with a stream of water from a wash bottle.

⚠ CAUTION

Equipment damage

Do not use a tissue to wipe the membrane.

5. If cleaning the membane does not improve the sensor response, replace the membrane and electrolyte solution. If necessary, polish the cathode.

   See the sensor reference manual for details.

Sensor not responding to chlorine changes

Recommended actions

1. Make sure the grab sample test is accurate and that the grab sample representative of the sample is flowing to the sensor.
2. Check if the pH compensation is correct. If the transmitter is using manual pH correction, verify that the pH value in the transmitter equals the actual pH to within ±0.1 pH. If the transmitter is using automatic pH correction, check the calibration of the pH sensor.
3. Clean the membrane and replace if necessary. Check that the holes at the base of the cathode stem are open. Use a straightened paper clip to clear blockages. Replace the electrolyte solution.
4. Replace the sensor.

Chlorine readings spike

Chlorine readings spike following sudden changes in pH.

Cause

Changes in pH alter the relative amounts of hypochlorous acid (HOCl) and hypochlorite ion (OCl^-) in the sample. Because the sensor responds only to HOCl, an increase in pH causes the sensor current (and the apparent chlorine level) to drop even though the actual free chlorine concentration remains constant.

To correct the pH effect, the transmitter automatically applies a correction. Generally, the pH sensor responds faster than the chlorine sensor. After a sudden pH change, the transmitter will temporarily over-compensate and gradually return to the correct value.

A time constant for return to normal is about five minutes.

Chlorine readings too low

Recommended actions

1. Make sure the sample was tested as soon as it was taken.

   Chlorine solutions are unstable. Test the sample immediately after collecting it. Avoid exposing the sample to sunlight.

2. Low readings can be caused by zeroing the sensor before the residual current has reached a stable minimum value. Residual current is the current the sensor generates even when no chlorine is in the sample. Because the residual current is

subtracted from subsequent measured currents, zeroing before the current is a minimum can lead to low results.

3. Sensor response depends on flow. If the flow is too low, readings will be low and flow sensitive. Verify that the flow past the sensor equals or exceeds the minimum value.

   See the sensor reference manual for recommended flow.

8.5.4 Ozone measurement and calibration problems

Problem	See section
Zero current is substantially outside the range -10 to 10 nA.	Ozone zero current outside range
Zero reading is unstable.	Ozone zero reading unstable
Sensor current during calibration is substantially less than about 350 nA/ppm at 77 °F (25 °C).	Sensor current less than 350 nA/ppm
Process readings are erratic.	Ozone process readings erratic
Readings drift.	Ozone readings drift
Sensor does not respond to changes in ozone level.	Sensor not responding to ozone changes
Ozone readings are too low.	Oxygen readings are too low

Ozone zero current outside range

The ozone zero current is substantially outside the range: -10 to 10 nA.

Recommended actions

1. Make sure the sensor is properly wired to the transmitter.
2. Make sure the zero solution is ozone free. Test the zero solution for ozone level.

   The concentration should be less than 0.02 ppm.
3. Make sure you allow adequate time for the sensor to reach a minimum stable residual current.

   It may take several hours, sometimes as long as overnight, for a new sensor to stabilize.
4. Check the membrane for damage and replace it if necessary.

Ozone zero reading unstable

Recommended actions

1. Verify that the sensor is properly wired to the transmitter and that all wiring connections are tight.
2. Readings are often erratic when a new or rebuilt sensor is first placed in service. Wait about an hour for readings to stabilize.

3. Make sure that the space between the membrane and cathode is filled with electrolyte solution and the flow path between the electrolyte reservoir and membrane are clear.
    a) Hold the sensor with the membrane end pointing down and shake it sharply a few times as though shaking down a clinical thermometer.
    b) If shaking does not work, try cleaning the holes around the cathode stem. Hold the sensor with the membrane end pointing up. Be sure the wood ring remains with the membrane assembly. Use the end of a straightened paper clip to clear the holes at the base of the cathode stem. Replace the membrane.
    c) Verify that the sensor is filled with electrolyte solution.

       Refer to the sensor reference manual for details.

Sensor current less than 350 nA/ppm

The sensor current is less than 350 nA/ppm at 77 °F (25 °C).

Recommended actions

1. Check the temperature.

   Sensor current is a strong function of temperature. The sensor current decreases about 3% for every °C drop in temperature.
2. Check the rate of the sample flow past the sensor tip.

   If the flow is too low, ozone readings will be low. Refer to the sensor instruction sheet for recommended sample flows.
3. Check the electrolyte flow.

   A lack of electrolyte flow to the cathode and membrane can cause low current. See Step 3 in Ozone zero reading unstable.
4. Check if the membrane is fouled or coated.

   A dirty membrane inhibits diffusion of ozone through the membrane, reducing the sensor current and increasing the response time.
    a) Clean the membrane by rinsing it with a stream of water from a wash bottle or gently wipe the membrane with a soft tissue.
    b) If cleaning the membrane does not improve the sensor response, replace the membrane and electrolyte solution.
    c) If necessary, polish the cathode.

       See the sensor reference manual for details.

Ozone process readings erratic

The ozone process readings are erratic.

Recommended actions

1. Readings are often erratic when a new sensor or rebuilt sensor is first placed in service. Wait a few hours for the current to stabilize.

2. Check if the sample flow is within the recommended range.

   High sample flow may cause erratic readings. Refer to the sensor reference manual for recommended flow rates.

3. Check if the holes between the membrane and the electrolyte reservoir are open.

   Refer to Ozone zero reading unstable.

4. Verify that the wiring is correct. Pay particular attention to shield and ground connections.
5. Make sure the membrane is in good condition and the sensor is filled with electrolyte solution. Replace the fill solution and electrolyte.

   Refer to the sensor reference manual for details.

Ozone readings drift

Recommended actions

1. Check if the sample temperature is changing.

   Membrane permeability is a function of temperature. The time constant for the Rosemount 499AOZ sensor is about five minutes. Therefore, the reading may drift for a while after a sudden temperature change.

2. Check if the membrane is clean.

   For the sensor to work properly, ozone must diffuse freely through the membrane. A coating on the membrane will interfere with the passage of ozone, resulting in a slow response. Clean the membrane by rinsing it with a stream of water from a wash bottle, or gently wipe the membrane with a soft tissue.

3. Check if the sample flow is within the recommended range.

   Gradual loss of sample flow will cause a downward drift.

4. Check if the sensor is new or recently serviced.

   New or rebuilt sensors may require several hours to stabilize.

Sensor not responding to ozone changes

Recommended actions

1. Make sure the grab sample test is accurate and representative of the sample flowing to the sensor.
2. Clean the membrane and replace it if necessary.
   a) Check that the holes at the base of the cathode stem are open.
   b) Use a straightened paper clip to clear blockages.
   c) Replace the electrolyte solution.
3. Replace the sensor.

Ozone readings too low

Recommended actions

1. Test the sample immediately after collecting it.
   Ozone solutions are highly unstable.
2. Zeroing the sensor before the residual current has reached a stable minimum value can cause low readings.
   Residual current is the current the sensor generates even when no ozone is in the sample. Because the residual current is subtracted from subsequent measured currents, zeroing before the current is a minimum can lead to low results. See Oxygen readings are too low.
3. Verify that the flow past the sensor equals or exceeds the minimum value.
   Sensor response depends on flow. If the flow is too low, readings will be low and flow sensitive. See the sensor reference manual for recommended flows.

8.5.5 pH measurement and calibration problems

Problem	See Section
SLOPE HI or SLOPE LO message is showing.	SLOPE Err HI or SLOPE Err LO
-0- OFFSEt message is showing.	-0- OFFSEt
Transmitter will not accept manual slope.	Transmitter not accepting manual slope
Sensor does not respond to known pH changes.	Sensor not responding to pH changes
Process pH is slightly different from the expected value.	Process pH slightly different
Process pH reading changes when flow changes.	Process pH reading changes with flow
Process pH is grossly wrong and/or noisy.	Process pH grossly wrong or noisy
Process readings are noisy.	Process readings noisy

Transmitter not accepting manual slope

Recommended action

If you know the slope from other sources, enter it directly into the transmitter.

The transmitter will not accept a slope (at 77 °F [25 °C]) outside the range 45 to 60 mV/pH. If you attempt to enter a slope less than 45 mV/pH, the transmitter will automatically change the entry to 45. If you attempt to enter a slope greater than 60 mV/pH, the transmitter will change the entry to 60 mV/pH.

Sensor not responding to pH changes

Recommended actions

1. If the process pH reading was not as expected, check the performance of the sensor in buffers. Also, use a second pH meter to verify the change.
2. Make sure the sensor is properly wired to the transmitter.
3. Check the glass electrode impedance to see if the glass bulb is cracked or broken.
4. Check the transmitter by simulating the pH input.

Process pH slightly different

Differences between pH readings made with an online instrument and a laboratory or portable instrument are normal. The online instrument is subject to process variables (for example, ground potentials, stray voltages, and orientation effects) that may not affect the laboratory or portable instrument.

Process pH reading changes with flow

The sensor has some degree of flow sensitivity (i.e., changing the sample flow causes the pH readings to change). Flow sensitivity varies from sensor to sensor.

Flow sensitivity can be a source of error if the pH and chlorine sensor flow cells are connected in series. The chlorine sensor requires a fairly rapidly flowing sample, and high flows may affect the pH reading. Typically, the difference in pH reading from a pH sensor in a rapidly (16 gph) and slowly (<2 gph) flowing sample is less than about 0.05.

Recommended action

If the change is greater than 0.05, install the pH and chlorine sensors in parallel streams.

Process pH grossly wrong or noisy

Grossly wrong or noisy readings suggest a ground loop (measurement system connected to earth ground at more than one point), a floating system (no earth ground), or noise being brought into the transmitter by the sensor cable. The problem arises from the process or installation. It is not a fault of the transmitter. The problem should disappear once the sensor is taken out of the system. Check the following:

Recommended actions

1. Check if a ground loop is present.
   a) Verify that the system works properly in buffers. Be sure there is no direct electrical connection between the buffer containers and the process liquid or piping.
   b) Strip back the ends of a heavy gauge wire. Connect one end of the wire to the process piping or place it in the process liquid. Place the other end of the wire in the container of buffer with the sensor.

      The wire makes an electrical connection between the process and sensor.

   If offsets and noise appear after making the connection, a ground loop exists.
2. Check if the process is grounded. Ground the piping or tank to a local earth ground.

The measurement system needs one path to ground: through the process liquid and piping. Plastic piping, fiber-glass tanks, and ungrounded or poorly grounded vessels do not provide a path. A floating system can pick up stray voltages from other electrical equipment.

If noise still persists, simple grounding is not the problem. The sensor wiring is probably carrying noise into the instrument.

3. Simplify the sensor wiring.
   a) Verify that pH sensor wiring is correct.
   b) Disconnect all sensor wires at the transmitter except pH/mV IN, REFERENCE IN, RTD IN, and RTD RETURN. If the sensor is wired to the transmitter through a remote junction box containing a preamplifer, disconnect the wires at the sensor side of the junction box.
   c) Tape back the ends of the disconnected wires to keep them from making accidental connections with other wires or terminals.
   d) Connect a jumper wire between the RTD RETURN and RTD SENSE terminals.

   If noise and/or offsets disappear, the interference was coming into the transmitter through one of the sensor wires. The system can be operated permanently with simplified wiring.
4. Check for ground connections or induced noise.
   a) If the sensor cable is run inside conduit, there may be a short between the cable and the conduit. Re-run the cable outside the conduit. If symptoms disappear, there is a short between the cable and the conduit. Likely, a shield is exposed and touching the conduit. Repair the cable and reinstall it in the conduit.
   b) To avoid induced noise in the sensor cable, run it as far away as possible from the power cables, relays, and electric motors. Keep sensor wiring out of crowded panels and cable trays.
   c) If ground loops persist, contact the factory. A visit from a service technician may be required to solve the problem.

Process readings noisy

Recommended actions

1. Check the conductivity of the sample.

   Measuring pH in samples having conductivity less than about 50 µS/cm can be very difficult. Special sensors are often needed and special attention must be paid to grounding and sample flow rate.

   Note
   Measuring free chlorine in samples having low conductivity can also be a problem. Generally, for a successful chlorine measurement, the conductivity should be greater than 50 µS/cm.

2. Check if the sensor is dirty of fouled.

Suspended solids in the sample can coat the reference junction and interfere with the electrical connection between the sensor and the process liquid. The result is often a noisy reading.

3. Make sure the sensor is properly wired to the transmitter.
4. Check if a ground loop is present.

   Refer to Process pH grossly wrong or noisy.

8.5.6 Simulate input currents - dissolved oxygen

To check the performance of the transmitter, use a decade box to simulate the current from the oxygen sensor.

Procedure

1. Disconnect the anode and cathode leads from terminals 13 and 14 and connect a decade box as shown in Figure 8-10.

   It is not necessary to disconnect the resistance temperature device (RTD) leads.

Figure 8-10: Simulate Dissolved Oxygen

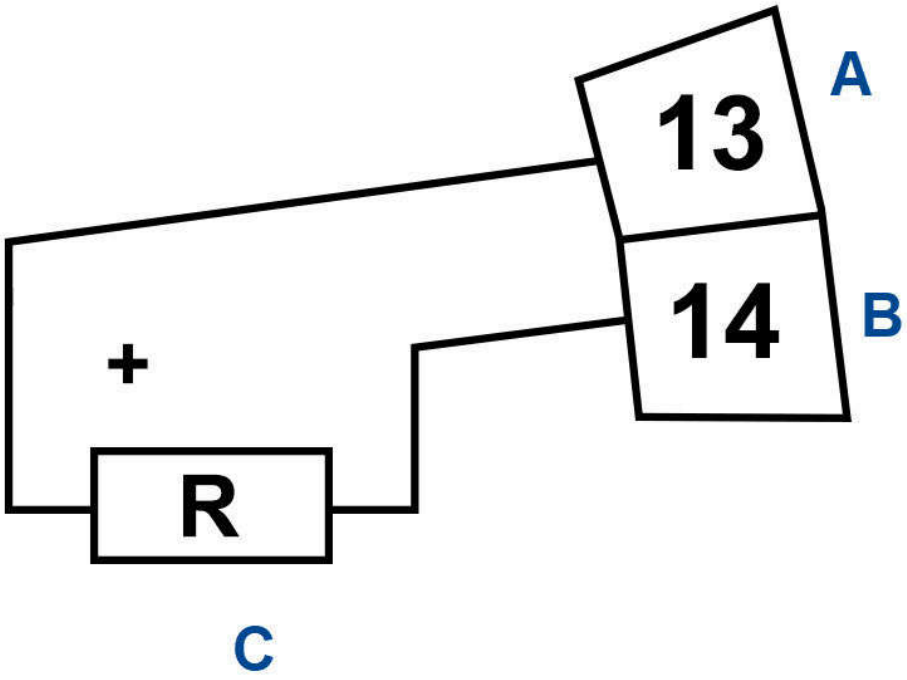

A. Anode
B. Cathode
C. Simulates sensor

2. Set the decade box to the resistance shown in the table.

Sensor	Polarizing voltage	Resistance	Expected current
Rosemount 499ADO	-675 mV	34 kΩ	20 µA
Rosemount 499ATrDO	-800 mV	20 kΩ	40 µA
Rosemount Hx438	-675 mV	8.4 MΩ	80 nA

3. Note the sensor current. To view the sensor current:
   a) Go to the main display and press **DIAG**.
   b) Press **NEXT**.
      `SEnSor Cur` appears in the display.
   c) Press **ENTER**.
      The display shows the sensor current.
   d) Note the units.
      µA is microamps; nA is nanoamps.
4. Change the decade box resistance and verify that the correct current is shown. Calculate the current from the equation:

$$\text{current } (\mu A) = \frac{\text{voltage } (mV)}{\text{resistance } (k\Omega)}$$

8.5.7 Simulate input currents - chlorine and ozone

To check the performance of the transmitter, use a decade box and a battery to simulate the current from the sensor. The battery, which opposes the polarizing voltage, is necessary to ensure that the sensor current has the correct sign.

Procedure

1. Disconnect the anode and cathode leads from terminals 13 and 14 and connect a decade box and battery as shown in Figure 8-11.
   It is not necessary to disconnect the resistance temperature device (RTD) leads.

Figure 8-11: Simulate Chlorine and Ozone

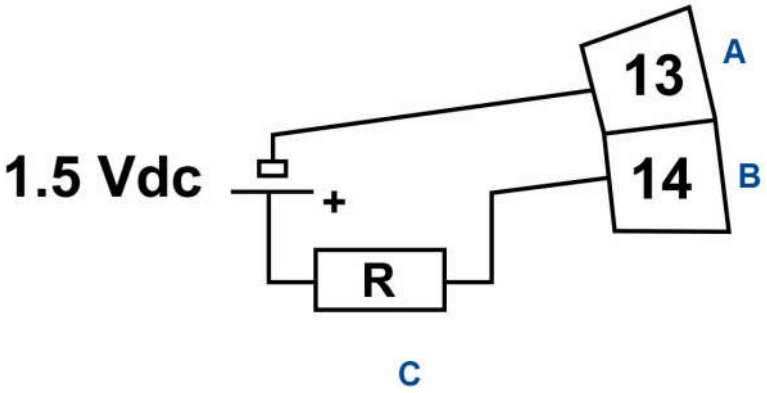

A. Anode
B. Cathode
C. Simulates sensor

2. Set the decade box to the resistance shown in the table.

Sensor	Polarizing voltage	Resistance	Expected current
Rosemount 499ACL-01 (free chlorine)	200 mV	28 MΩ	500 nA
Rosemount 499ACL-02 (total chlorine)	250 mV	675 kΩ	2000 nA
Rosemount 499AOZ	200 mV	2.7 MΩ	500 nA

3. Note the sensor current.

   It should be close to the value in the table. The actual value depends on the voltage of the battery. To view the sensor current:

   a) Go to the main display and press **DIAG**.

   b) Press **NEXT**.
   `SEnSor Cur` appears in the display.

   c) Press **ENTER**.
   The display shows the sensor current.

   d) Note the units
   µA is microamps; na is nanoamps.

4. Change the decade box resistance and verify that the correct current is shown. Calculate the current from the equation:

$$\text{current } (\mu\text{A}) = \frac{\text{V}_{\text{battery}} - \text{V}_{\text{polarizing}}\,(\text{mV})}{\text{resistance } (\text{k}\Omega)}$$

The voltage of a fresh 1.5 volt battery is about 1.6 volt (1600 mV).

8.5.8 Simulating inputs - pH

General information about simulating pH inputs

This section describes how to simulate a pH input into the transmitter. To simulate a pH measurement, connect a standard millivolt source to the transmitter. If the transmitter is working properly, it will accurately measure the input voltage and convert it to pH. Although the general procedure is the same, the wiring details depend on whether the preamplifier is in the sensor, a junction box, or the transmitter.

Simulate pH inputs when the preamplifier is in the transmitter

Procedure

1. Turn off automatic temperature correction and set the manual temperature to 77 °F (25 °C).
2. Disconnect the pH sensor. Also, disconnect the chlorine sensor anode lead. Connect a jumper wire between the pH IN and REF IN terminals.
3. Confirm that the transmitter is reading the correct mV value.
   a) With the main display showing, press **DIAG**.
   b) Press **NEXT** until the display shows `PH`.
   c) Press **ENTER**.
   The display shows `InpUt` followed by a number. The number is the raw input signal in millivolts. The measured voltage should be 0 mV.
4. Confirm that the transmitter is reading the correct pH value.
   a) Go to the main display.
   b) Press **3** or **5**.
   The second line of the display shows the pH. The pH should be approximately 7.00. Because calibration data stored in the transmitter may be offsetting the input voltage, the displayed pH may not be exactly 7.00
5. If a standard millivolt source is available, disconnect the jumper wire between the pH IN and REF IN terminals and connect the voltage source as shown in Figure 8-12.

Figure 8-12: Simulate pH

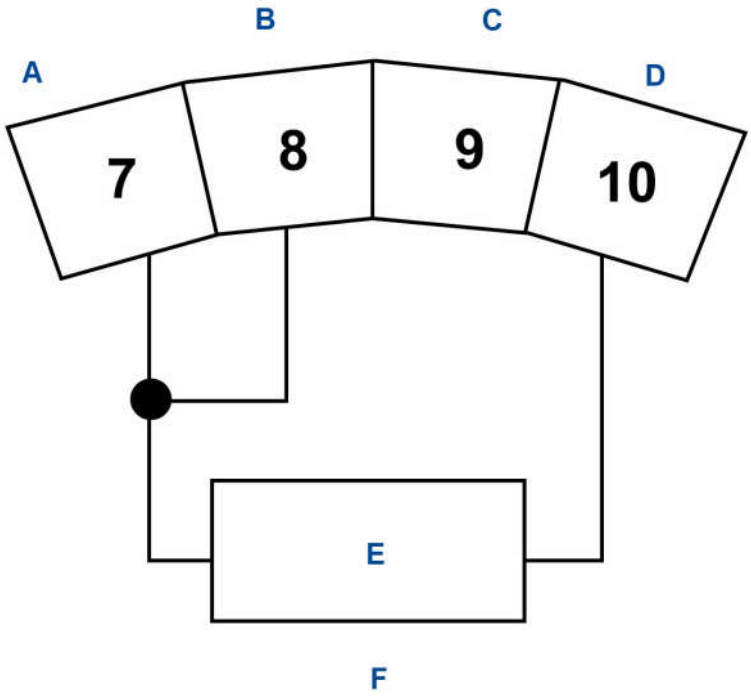

A. Reference in
B. Solution ground
C. pH guard
D. pH in
E. mV source
F. Simulates pH

6. Calibrate the transmitter. Use 0.0 mV for Buffer 1 (pH 7.00) and -177.4 mV for Buffer 2 (pH 10.00).
   If the transmitter is working properly, it should accept the calibration. The slope should be 59.16 mV/pH, and the offset should be zero.
7. To check linearity, set the voltage source to the values shown in the table and verify that the pH and millivolt readings match the values in the table.

Voltage (mV)	pH (at 77 °F [25 °C])
295.8	2.00
177.5	4.00
59.2	6.00
59.2	8.00
177.5	10.00
295.8	12.00

Simulate pH inputs when the preamplifier is in a junction box

The procedure is the same as described in Simulate pH inputs when the preamplifier is in the transmitter. Keep the connection between the transmitter and the junction box in place. Disconnect the sensor at the sensor side of the junction box and connect the voltage source to the sensor side of the junction box.

Simulate pH inputs when the preamplifier is in a sensor

The preamplifier in the sensor converts the high impedance signal into a low impedance signal without amplifying it. To simulate pH values, follow the procedure in Simulate pH inputs when the preamplifier is in the transmitter.

8.5.9 Simulate temperature

The transmitter accepts either a Pt100 resistance temperature device (RTD) (used in Rosemount pH, 499ADO, 499ATrDO, 499ACL-01, 499ACL-02, and 499AOZ sensors) or a 22k NTC thermistor (used in Rosemount Hx438 dissolved oxygen sensors and most steam-sterilizable sensors from other manufacturers).

The Pt100 RTD has a three-wire configuration. See Figure 8-13. The thermistor has a two-wire configuration.

Figure 8-13: Three-Wire RTD Configuration

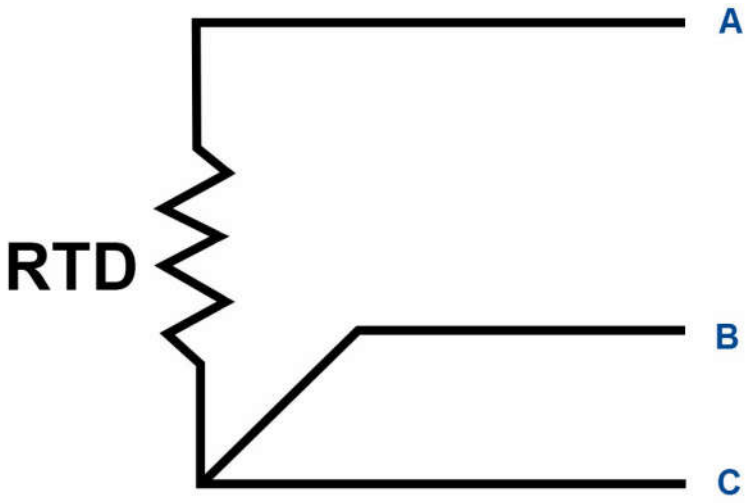

A. RTD in
B. RTD sense
C. RTD return

Although only two wires are required to connect the RTD to the transmitter, using a third wire allows the transmitter to correct for the resistance of the lead wires and for changes in the lead wire resistance with temperature.

Procedure

1. To simulate the temperature input, wire a decade box to the transmitter or junction box as shown in Figure 8-14.

Figure 8-14: Simulating RTD Inputs

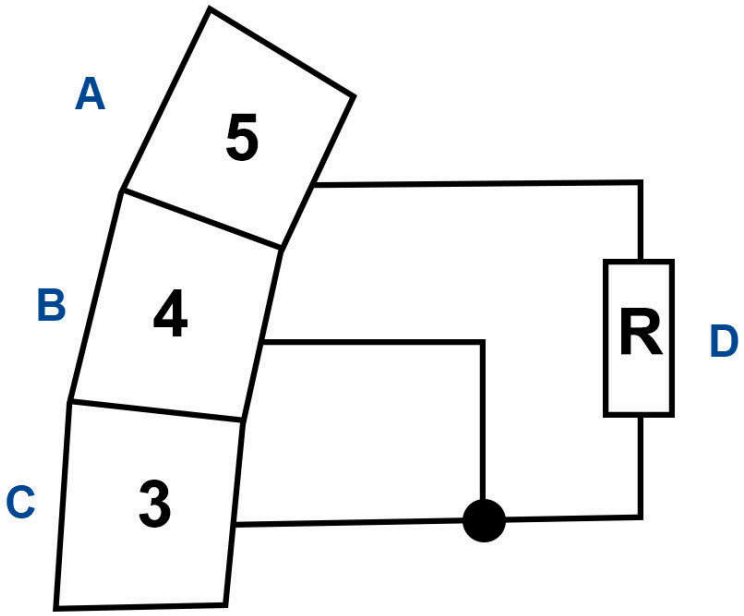

A. RTD in
B. RTD sense
C. RTD return
D. Simulates RTD

The figure shows wiring connections for sensors containing a Pt 100 RTD. For sensors using a 22k NTC thermistor (Rosemount Hx438), wire the decade box to terminals 1 and 2 on TB6.

2. To check the accuracy of the temperature measurement, set the resistor to simulating the RTD to the values indicated in Table 8-4 and not the temperature readings.

   The measured temperature might not agree with the value in the table. During sensor calibration, an offset might have been applied to make the measured temperature agree with a standard thermometer. The offset is also applied to the simulated resistance. The controller is measuring temperature correctly if the difference between measured temperatures equals the difference between the values in the table to within ±0.1 °C.

Table 8-4: RTD Values

Temp	Pt 100 (Ω)	22k NTC (kΩ)
1 °C (34 °F)	100.0	64.88
10 °C (50 °F)	103.9	41.33
20 °C (68 °F)	107.8	26.99
25 ° C (77 °F)	109.7	22.00
30 °C (86 °F)	111.7	18.03

Table 8-4: RTD Values *(continued)*

Temp	Pt 100 (Ω)	22k NTC (kΩ)
40 °C (104 °F)	115.5	12.31
50 °C (122 °F)	119.4	8.565
60 °C (140 °F)	123.2	6.072
70 °C (150 °F)	127.1	4.378
80 °C (176 °F)	130.9	3.208
85 °C (185 °F)	132.8	2.761
90 °C (194 °F)	134.7	2.385
100 (212 °F)	138.5	1.796

Example

For example, start with a simulated resistance of 103.9 Ω, which corresponds to 10.0 °C (50 °F). Assume that the offset from the sensor calibration was -0.3 Ω. Because of the offset, the transmitter calculates temperature using 103.6 Ω. The result is 9.2 °C (48.6 °F). Now change the resistance to 107.8 Ω, which corresponds to 20.0 °C (68 °F). The transmitter uses 107.5 Ω to calculate the temperature, so the display reads 19.2 °C (66.6 °F). Because the difference between the displayed temperatures (10.0 °C) is the same as the difference between the simulated temperatures, the transmitter is working correctly.

8.5.10 Measuring reference voltage

Some processes contain substances that poison or shift the potential of the reference electrode. Sulfide is a good example. Prolonged exposure to sulfide converts the reference electrode from a silver/silver chloride electrode to a silver/silver sulfide electrode. The change in reference voltage is several hundred millivolts.

A good way to check for poisoning is to compare the voltage of the reference electrode with a silver/silver chloride electrode known to be good. The reference electrode from a new sensor is best. See Figure 8-15. If the reference electrode is good, the voltage difference should be no more than about 20 mV. A poisoned reference electrode usually requires replacement.

Figure 8-15: Checking for a Poisoned Reference Electrode

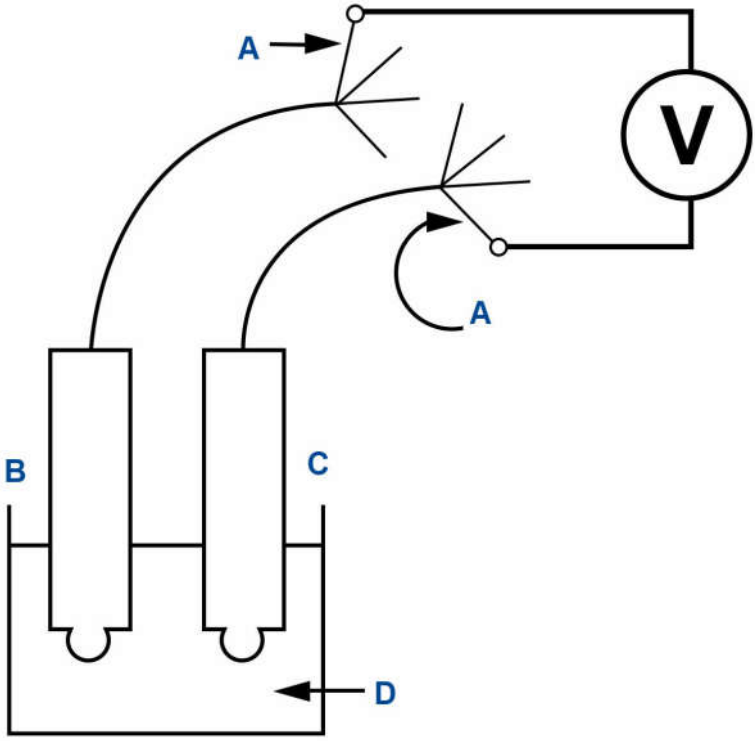

A. Reference lead
B. Suspect sensor
C. Good sensor
D. Buffer of KCl solution

Refer to the sensor wiring diagram to identify the reference leads. A laboratory silver/silver chloride electrode can be used in place of the second sensor.

8.6 Factory assistance and repairs

For assistance in correcting transmitter, sensor, and measurement problems:

- In the United States, call Emerson Liquid Division at +1 800 854 8257
- Outside the United States, call the nearest Emerson office. See the back page of the manual.

9 Digital communications

9.1 HART® communications

9.1.1 HART® communications overview

HART (highway addressable remote transducer) is a digital communication system in which two frequencies are superimposed on the 4 to 20 mA output signal from the transmitter. A 1200 Hz sine wave represents the digit 1, and a 2400 Hz sine wave represents the digit 0. Because the average value of a sine wave is zero, the digital signal adds no dc component to the analog signal. HART permits digital communication while restarting the analog signal for process control.

The HART protocol, originally developed by Fisher-Rosemount, is now overseen by the independent HART Communication Foundation. The foundation ensures that all HART devices can communicate with one another. For more information about HART communications, call the HART Communication Foundation at (512) 794-0369. The web address is http://www.fieldcommgroup.org.

9.1.2 HART® interface devices

With HART communicators, you can view measurement data (pH, ORP, and temperature), program the transmitter, and download information from the transmitter for transfer to a computer for analysis. You can also send downloaded information to another HART transmitter. To access the HART interface, you can use either a handheld communicator or a computer.

HART interface devices operate from any wiring termination point in the 4 - 20 mA loop. A minimum load of 250 ohms must be present between the transmitter and the power supply. See Figure 9-1.

If your communicator does not recognize the Rosemount™ 5081 transmitter, you may need to update the device description library. Call the manufacturer of your HART communication device for updates.

Figure 9-1: HART Communicators

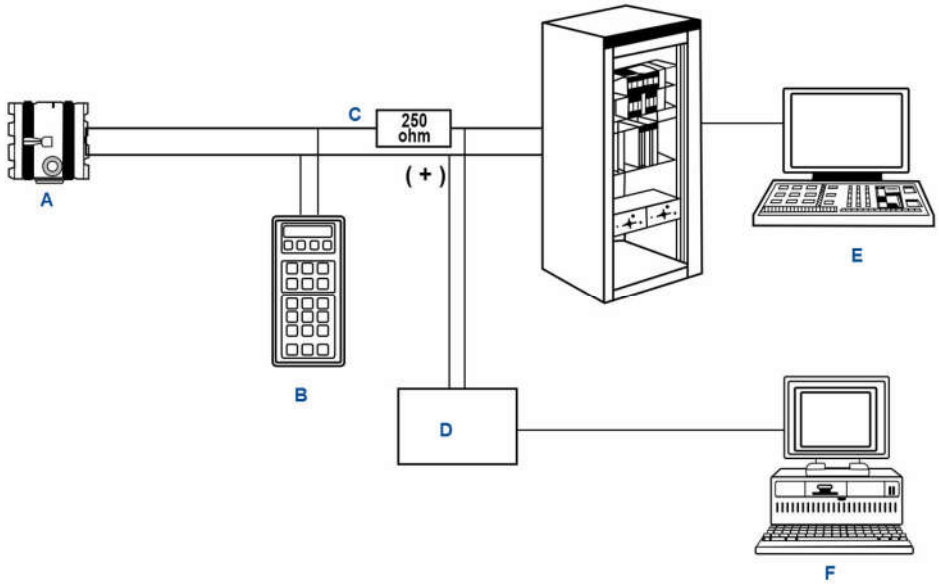

A. Rosemount 5081 two-wire transmitter
B. Handheld communicator (configurator)
C. 4-20 mA + digital
D. Bridge
E. Control system
F. Computer

9.2 FOUNDATION™ Fieldbus communication

Figure 9-2 shows the Rosemount 5081 using FOUNDATION Fieldbus to measure conductivity. The figure also shows three ways in which Fieldbus communciation can be used to read process variables and configure the transmitter.

Figure 9-2: Configuring Rosemount 5081 Transmitter with FOUNDATION Fieldbus

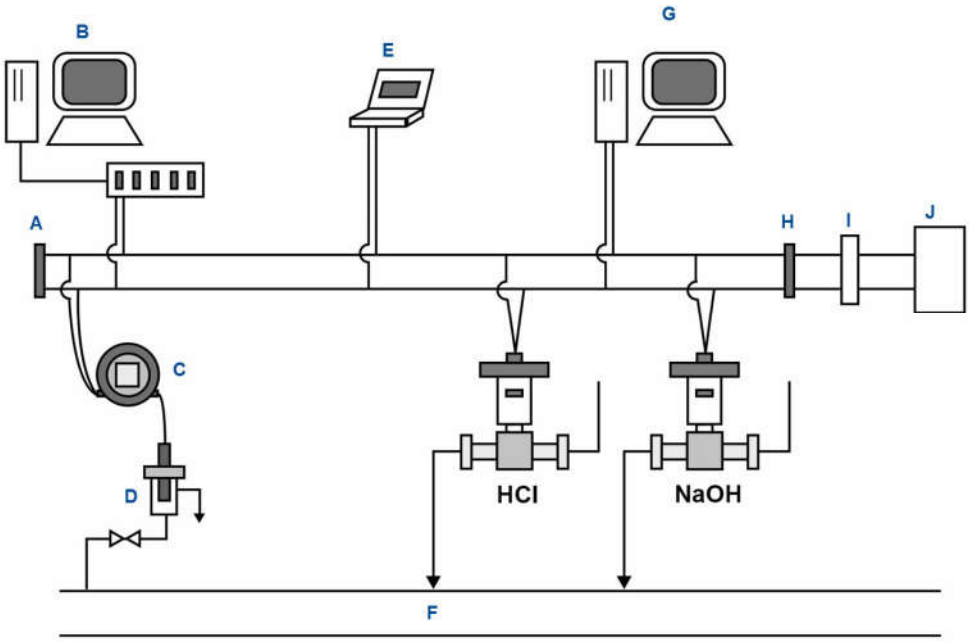

A. Terminator
B. DeltaV configurator and host
C. Rosemount 5081
D. Sensor
E. Fieldbus technician configurator
F. Process line
G. Other host
H. Terminator
I. Filter
J. Power supply

9.2.1 FOUNDATION™ Fieldbus specifications

Model	Rosemount 5081 Fieldbus transmitter
Device ITK profile	6 (released for (ITK 6.0.0/6.0.1)
Manufacturer identification (MANUFAC_ID)	0x524149
Device type (DEV_TYPE)	0x4084
Device revision (DEV_REV)	0x03
Linkmaster	Yes
Number of link objects	20
VCRs supported	20

Mandatory features	• Resource block • Alarm and events • Function block linking • Trending • Multi-bit alert reporting • Field diagnostics
Additional features	• Common software download • Block instantiation • Supports DeltaV auto commissioning • Supports DeltaV auto replacement • Supports DeltaV firmware live download • PlantWeb alerts with re-annunciation/ multibit • Supports easy configuration assistant
Function blocks (execution time)	• 4 - analog input blocks (15 mseconds) • AI block channels Channel 1: Conductivity, resistivity, concentration Channel 2: Temperature Channel 3: Raw conductivity • Proportional integral derivative (25 milliseconds)
Power	• Two wire device; Fieldbus polarity insensitive • Current draw: 21 mA • Device certifications: IS / FISCO • Maximum certified input voltage for IS: 30 V • Maximum certified input current for IS: 300 mA • Maximum certified input power for IS: 1.3 W • Internal capacitance (Ci): 0 nF • Internal inductance (Li): 0 µH

9.3 Asset Management Solutions

Asset Management Solutions (AMS) is software that helps plant personnel better monitor the performance of analytical instruments, pressure and temperature transmitters, and control valves. Continuous monitoring means maintenance personnel can anticipate equipment failures and plan preventative measures before costly breakdown maintenance is required.

AMS uses remote monitoring. The operator, sitting at a computer, can view measurement data, change program settings, read diagnostic and warning messages, and retrieve historical data from any HART®-compatible device, including the Rosemount 5081 transmitter. Although AMS allows access to the basic functions of any HART compatible device, Rosemount has developed additional software that allows access to all features of the Rosemount 5081 transmitter.

AMS can play a central role in plant quality assurance and quality control. Using AMS Audit Trail, plant operators can track calibration frequency and results as well as warnings and diagnostic messages. The information is available to Audit Trail whether calibrations were done using the infrared remote controller, the HART communicator, or AMS software.

AMS operates in Windows 95. AMS communicates through a HART-compatible modem with any HART transmitters, including those from other manufacturers. AMS is also compatible with FOUNDATION™ Fieldbus, which allows future upgrades to Fieldbus instruments.

Rosemount AMS windows provide access to all transmitter measurement and configuration variables. You can read raw data, final data, and program settings and can reconfigure the transmitter from anywhere in the plant.

10 Return of material

10.1 General information

To expedite the repair and return of instruments, proper communication between the customer and the factory is important. Call 1-800-999-9307 for a Return Materials Authorization (RMA) number.

10.2 Warranty repair

To return instruments still under warranty:

Procedure

1. Contact Rosemount™ for authorization.
2. To verify warranty, supply the factory sales order number or the original purchase order number.

   In the case of individual parts or sub-assemblies, supply the serial number on the unit.
3. Carefully package the materials and enclose your Letter of Transmittal. If possible, pack the materials in the same manner as they were received.
4. Send the package prepaid to:

   Emerson Automation Solutions

   8200 Market Blvd

   Chanhassen, MN 55317

   RMA No. _____
5. Mark the package: *Returned for Repair*

   Model No. _____

10.3 Non-warranty repair

To return instruments that are no longer under warranty for repair:

Procedure

1. Call Rosemount for authorization.
2. Supply the purchase order number and make sure to provide the name and telephone number of the individual to be contacted should additional information be needed.
3. Do steps 3-5 of Warranty repair.

Note
Consult the factory for additional information regarding service or repair.

A Engineering Drawings

The following is a list of engineering drawings in the order in which they appear in this manual.

Drawing number	Title
1400674	Schem, CSA I.S. / NIFW installation 5081 C/T
1400675	Schem, CSA I.S. / NIFW install 5081 P/A
1400676	Schem, FM I.S. / NIFW install 5081 A/P
1400677	Schem, FM I.S / NIFW installation 5081 C/T
1400678	Sch, system FM DIP/EXP proof 5081 C/T
1400679	Sch, system FM DIP/EXP proof 5081 P/A
1700783	Certified product, 5081 XMTR, CSA
1700784	Certified product, 5081 XMTR, FM
1700785	Certified product, 5081 P/A ATEX/IECEx
1700786	Certified product, 5081 C/T ATEX/IECEx

TABLE I

GAS GROUPS	C OPTION OUTPUT PARAMETERS Ca (uf)		La (mH)
	FF / FI		HT
A, B	2.05	0.4	0.5
C	490.05	1.6	7.0
D	9990.05	3.1	3.7

TABLE II

C OPTION OUTPUT PARAMETERS	5081C TB1, PINS 1 THRU 12	
	FF / FI	HT
Vt	6.51 Vdc	6.51 Vdc
It	302.59 mA	280 mA
Pt	365 mW	442 mW

TABLE III

5081C/T INPUT PARAMETERS, SUPPLY/SIGNAL TERMINALS, TB1 PINS 15 & 16						Voc MAX OUT (Vdc)	Isc MAX OUT (mA)
OPTIONS	Vmax(Vdc)	Imax (mA)	Pmax (W)	Ci (nF)	Li (uH)		
FI (FISCO)	17.5	380	5.32	5	10		
FF/FI (NON-FISCO)	30	300	1.3	27.8	0		
HT (NON-FISCO)	30	200	0.9	27.8	0		
ENTITY PARAMETERS: FIELD COMMUNICATOR							
375/475	30	200	1	.00	0.0	1.9	3.2

17. FOR THE C OPTION, THE CAPACITANCE AND INDUCTANCE CONNECTED TO THE SENSOR TERMINALS MUST NOT EXCEED THE VALUES SPECIFIED IN TABLE I.
16. FOR C OPTION, SENSORS SHALL BE CSA APPROVED IN ACCORDANCE WITH THE ENTITY REQUIREMENTS OR MEET THE REQUIREMENTS OF SIMPLE APPARATUS AS DEFINED IN ANSI/ISA RP12.6 AND THE NEC, ANSI/NFPA 70. THEY CANNOT GENERATE NOR STORE MORE THAN 1.5V, 0.1mA, 25mW OR A PASSIVE COMPONENT THAT DOES NOT DISSIPATE MORE THAN 1.3W. SEE TABLES I AND II.

△15 NON-INCENDIVE FIELD WIRING METHODS MAY BE USED FOR CONNECTING SENSORS TO THE INSTRUMENT. ATTACHED SENSORS MUST BE CSA APPROVED AS NON-INCENDIVE FOR CLASS 1, DIVISION 2, GROUPS ABCD WITH INPUT VALUES OF Vmax AND Imax ≥ Voc (Vt) AND Isc (It) LISTED IN TABLE II AND THE Ci AND Li OF THE SENSOR AND INTERCONNECTED WIRING MUST BE ≤ Ca AND La LISTED IN TABLE 1 OR BE CLASSIFIED AS "SIMPLE APPARATUS". SIMPLE APPARATUS ARE DEVICES WHICH ARE INCAPABLE OF GENERATING OR STORING MORE THAN 1.2 V, 0.1 A, 25 mW OR 20 µJ (CONTACTING CONDUCTIVITY SENSORS QUALIFY AS SIMPLE APPARATUS).

△14 INSTALLATION TO BE IN ACCORDANCE WITH THE CANADIAN ELECTRICAL CODE.

△13 DIVISION 2 WIRING METHOD PER THE CANADIAN ELECTRICAL CODE (EXCLUDING NONINCENDIVE FIELD WIRING).

△12 INTRINSICALLY SAFE APPARATUS (5081, IRC TRANSMITTER, 375/475 FIELD COMMUNICATOR, FIELDBUS TERMINATOR OR ANY OTHER FIELDBUS DEVICES) AND ASSOCIATED APPARATUS (SAFETY BARRIER) SHALL MEET THE FOLLOWING REQUIREMENTS:
THE VOLTAGE (Vmax) AND CURRENT (Imax) OF THE INTRINSICALLY SAFE APPARATUS MUST BE EQUAL TO OR GREATER THAN THE VOLTAGE (Voc OR Vt) AND CURRENT (Isc OR It) WHICH CAN BE DELIVERED BY THE ASSOCIATED APPARATUS (SAFETY BARRIER). IN ADDITION, THE MAXIMUM UNPROTECTED CAPACITANCE (Ci) AND INDUCTANCE (Li) OF THE INTRINSICALLY SAFE APPARATUS, INCLUDING INTERCONNECTING WIRING, MUST BE EQUAL OR LESS THAN THE CAPACITANCE (Ca) AND INDUCTANCE (La) WHICH CAN BE SAFELY CONNECTED TO THE APPARATUS. (REF. TABLE III)

△11 FOR (NON-FISCO) INTRINSIC SAFETY INSTALLATION, ANY SINGLE SHUNT ZENER DIODE SAFETY BARRIER APPROVED BY CSA HAVING THE FOLLOWING OUTPUT PARAMETERS:
SUPPLY/SIGNAL TERMINALS ON TB1, PINS 15 AND 16.
Voc OR Vt NOT GREATER THAN 30 V FOR FF, FI AND HT OPTIONS
Isc OR It NOT GREATER THAN 300 mA FOR FF AND FI OPTIONS, OR 200 mA FOR HT OPTION
Pmax NOT GREATER THAN 1.3 W FOR FF AND FI OPTIONS, OR 0.9 mW FOR HT OPTION.

△10 FOR T OPTION, MAXIMUM CABLE LENGTH IS 250 FEET.

9. USE SUPPLY WIRES SUITABLE FOR 5°C ABOVE SURROUNDING AMBIENT.
8. NO REVISION TO DRAWING WITHOUT PRIOR CSA APPROVAL.
7. THE CONFIGURATION OF ASSOCIATED APPARATUS MUST BE CSA APPROVED UNDER THE ASSOCIATED CONCEPT AND (FOR HT AND FF OPTIONS) BE RESISTIVELY LIMITED WITH LINEAR OUTPUTS.
6. CONTROL EQUIPMENT CONNECTED TO ASSOCIATED APPARATUS MUST NOT USE OR GENERATE MORE THAN 250 Vrms OR Vdc.
5. ASSOCIATED APPARATUS MANUFACTURER'S INSTALLATION DRAWING MUST BE FOLLOWED WHEN INSTALLING THIS EQUIPMENT.
4. THE ENTITY CONCEPT ALLOWS INTERCONNECTION OF INTRINSICALLY SAFE APPARATUS WITH ASSOCIATED APPARATUS WHEN THE FOLLOWING IS TRUE:

FIELD DEVICE INPUT		ASSOCIATED APPARATUS OUTPUT
Vmax OR Ui	≥	Voc, Vt OR Uo
Imax OR Ii	≥	Isc, It OR Io
Pmax OR Pi	≥	Po
Ci + Ccable	≤	Ca, Ct OR Co (FOR NON-FISCO INSTALLATIONS)
Li + Lcable	≤	La, Lt OR Lo (FOR NON-FISCO INSTALLATIONS)

3. RESISTANCE BETWEEN INTRINSICALLY SAFE GROUND AND EARTH GROUND MUST BE LESS THAN 1.0 Ohm.
2. DUST-TIGHT CONDUIT SEAL MUST BE USED WHEN INSTALLED IN CLASS II AND CLASS III ENVIRONMENTS.
1. INSTALLATION SHOULD BE IN ACCORDANCE WITH ANSI/ISA RP12.06 "INSTALLATION OF INTRINSICALLY SAFE SYSTEMS FOR HAZARDOUS (CLASSIFIED) LOCATIONS" (EXCEPT CHAPTER 5 FOR FISCO INSTALLATIONS) AND THE CANADIAN ELECTRICAL CODE (CSA C22.1).

NOTES: UNLESS OTHERWISE SPECIFIED

FISCO INTRINSIC SAFETY INSTALLATION

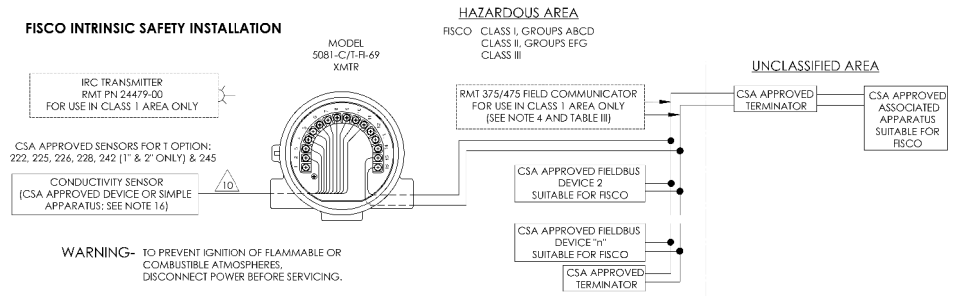

(NON-FISCO) INTRINSIC SAFETY INSTALLATION

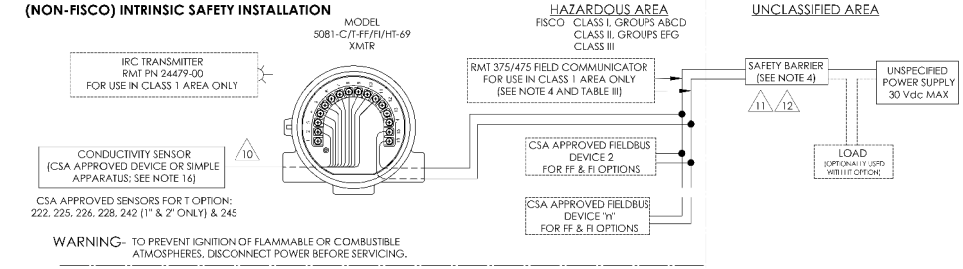

DIVISION 2 NONINCENDIVE FIELD WIRING INSTALLATION

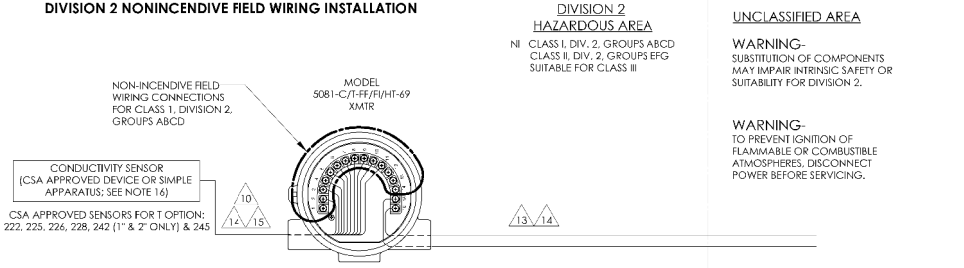

DWG NO
1400674

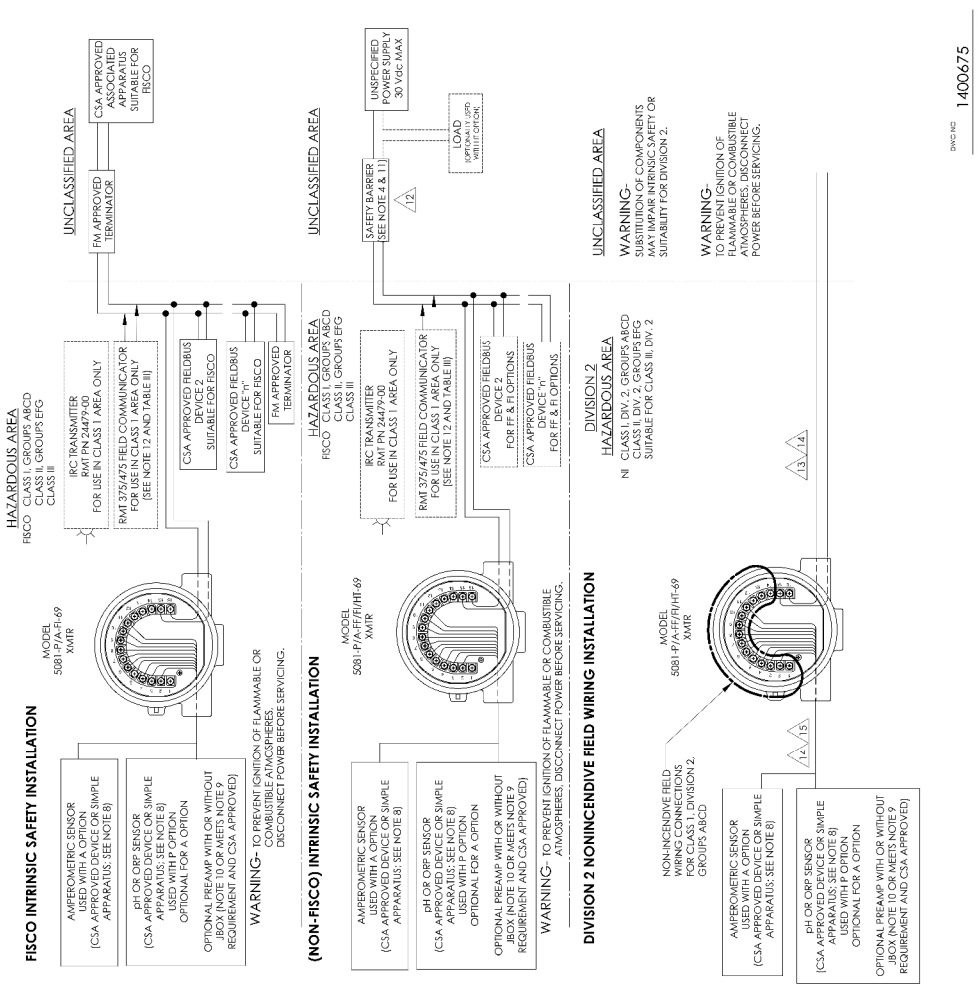

TABLE I

GAS GROUPS	5081 P/A OUTPUT PARAMETERS	
	Co (µF)	Lo (mH)
	H / I	I
A, B	0.96	3.1
C	5.99	12.3
D	21.69	26

	5081 P/A OUTPUT PARAMETERS	
	Co (µF)	Lo (mH)
	H / I	I
A, B	0.96	3.1
C	5.99	12.3
D	21.69	26

TABLE II

OUTPUT PARAMETERS	5081 P/A TB1, 2 & TB2, 1-12	
	FF / FI	HT
Vt	13.07 Vdc	13.07 Vdc
It	105.44 mA	120 mA
Pt	1.47 mW	192 mW

TABLE III

5081 P/A INPUT PARAMETERS, SUPPLY/SIGNAL TERMINALS, (81 FNS 13 & 16					VOC MAX. (VOLTS)	ISC MAX. (mA)
OPTIONS	Vmax(V)(Vt)	Imax (mA)	Pmax (W)	Ci (nF)	Li (uH)	
FI (FISCO)	17.5	380	5.32	22.8	0	
FF/PI (NON-FISCO)	30	300	1.3	22.8	0	
HT (NON-FISCO)	30	300	1.3	22.8	0	
	P1(FF/PI PARAMETERS) (HT) COMMUNICATION				32	
	30/24/3		200	1.9	60	

17. THE CAPACITANCE AND INDUCTANCE CONNECTED TO THE SENSOR TERMINALS MUST NOT EXCEED THE VALUES SPECIFIED IN TABLE II.
16. NO REVISION TO DRAWING WITHOUT CSA APPROVAL.
15. NON-INCENDIVE FIELD WIRING METHODS MAY BE USED FOR CONNECTING SENSORS TO THE INSTRUMENT, ATTACHED SENSORS MUST BE CSA APPROVED AS NON-INCENDIVE FOR CLASS 1, DIVISION 2, GROUPS ABCD WITH INPUT VALUES OF Vmax AND Imax ≥ Voc (Vt) AND Isc (It) LISTED IN TABLE II AND THE CABLE AND CONNECTED APPARATUS SIMPLE APPARATUS LIMITS OF Co AND Lo LISTED IN TABLE I OR BE CLASSIFIED AS SIMPLE APPARATUS. SIMPLE APPARATUS ARE DEVICES WHICH ARE INCAPABLE OF GENERATING OR STORING MORE THAN 1.2 V, 0.1 A, 25 mW OR 20 µJ (AMPEROMETRIC SENSORS WITHOUT PREAMPS QUALIFY AS SIMPLE APPARATUS).
14. INSTALLATION TO BE IN ACCORDANCE WITH THE CANADIAN ELECTRICAL CODE.
13. DIVISION 2 WIRING METHOD (EXCLUDING NONINCENDIVE FIELD WIRING).
12. INTRINSICALLY SAFE APPARATUS (5081, IRC TRANSMITTER, 375/475 FIELD COMMUNICATOR, FIELDBUS TERMINATOR OR ANY OTHER FIELDBUS DEVICES) AND ASSOCIATED APPARATUS (SAFETY BARRIER) SHALL MEET THE FOLLOWING REQUIREMENTS:
THE VOLTAGE (Vmax) AND CURRENT (Imax) OF THE INTRINSICALLY SAFE APPARATUS MUST BE EQUAL OR LESS THAN THE ASSOCIATED APPARATUS (SAFETY BARRIER). IN ADDITION, THE MAXIMUM UNPROTECTED CAPACITANCE (Ci) AND INDUCTANCE (Li) OF THE INTRINSICALLY SAFE APPARATUS, INCLUDING INTERCONNECTING WIRING, MUST BE EQUAL OR LESS THAN THE CAPACITANCE (Co) AND INDUCTANCE (Lo) WHICH CAN BE SAFELY CONNECTED TO THE APPARATUS. (REF. TABLE III)
11. FOR INTRINSIC SAFETY (NON-FISCO) INSTALLATION:
ANY SINGLE SHUNT ZENER DIODE SAFETY BARRIER APPROVED BY FM HAVING THE FOLLOWING OUTPUT PARAMETERS:
Voc OR Vt NOT GREATER THAN 30 V FOR FF, FI AND HT OPTIONS
Isc OR It NOT GREATER THAN 300 mA FOR FF AND FI OPTIONS, OR 200 mA FOR HT OPTION
Pmax NOT GREATER THAN 1.3 W FOR FF AND FI OPTIONS, OR 0.9 mW FOR HT OPTION.
10. INTEGRAL PREAMPLIFIER: A WEATHER RESISTANT ENCLOSURE MUST BE USED, USE THE 273546-00 PREAMPLIFIER. OTHER PREAMPS OR PREAMP CONTAINING SENSORS MAY BE USED IF OVERALL C AND L ARE < THE LIMITS DETAILED IN NOTE 9 AND THE MAXIMUM ENITY PARAMETERS ARE > THOSE IN TABLE II.
9. THE 5081 P/A INCLUDES INTEGRAL PREAMPLIFIER CIRCUITRY. AN EXTERNAL PREAMPLIFIER MAY ALSO BE USED, THE OUTPUT PARAMETERS SPECIFIED IN TABLE II ARE VALID FOR EITHER PREAMPLIFIER, THE CAPACITANCE AND INDUCTANCE OF THE LOAD CONNECTED TO THE SENSOR TERMINALS MUST NOT EXCEED THE VALUES SPECIFIED IN TABLE II. FOR EXAMPLE, FOR THE 5081-P-A-FF/HT-69 WITH 7.62 m (25 ft) OF 3180R/FB2 Lcable, THE MAXIMUM ALLOWABLE CAPACITANCE OF THE ENTITY REQUIREMENTS OR MEET THE REQUIREMENTS OF SIMPLE APPARATUS AS DEFINED IN ANSI/ISA RP12.6 AND THE NEC, ANSI/NFPA 70. THEY CANNOT GENERATE NOR STORE MORE THAN 1.5V, 0.1mA, 25mW OR A PASSIVE COMPONENT THAT DOES NOT DISSIPATE MORE THAN 1.3W, SEE TABLES I AND II.
8. SENSORS SHALL BE CSA APPROVED FOR USE IN CLASS I, DIVISION 2, GROUPS ABCD AND THE ENTITY REQUIREMENTS OR MEET THE REQUIREMENTS OF SIMPLE APPARATUS AS DEFINED IN ANSI/ISA RP12.6 AND THE NEC, ANSI/NFPA 70. THEY CANNOT GENERATE NOR STORE MORE THAN 1.5V, 0.1mA, 25mW OR A PASSIVE COMPONENT THAT DOES NOT DISSIPATE MORE THAN 1.3W, SEE TABLES I AND II.
7. THE CONFIGURATION OF ASSOCIATED APPARATUS MUST BE CSA APPROVED UNDER THE ASSOCIATED CONCEPT AND BE RESISTIVELY LIMITED HAVING LINEAR OUTPUTS.
6. CONNECTION OF NON-CSA APPROVED ASSOCIATED APPARATUS MUST NOT USE OR GENERATE MORE THAN 250 Vrms, OR Vdc.
5. ASSOCIATED APPARATUS MANUFACTURER'S INSTALLATION DRAWING MUST BE FOLLOWED WHEN INSTALLING THIS EQUIPMENT.
4. THE ENTITY CONCEPT ALLOWS INTERCONNECTION OF INTRINSICALLY SAFE APPARATUS WITH ASSOCIATED APPARATUS WHEN THE FOLLOWING IS TRUE:

ASSOCIATED APPARATUS OUTPUT		FIELD DEVICE INPUT
Voc OR Ui	≥	Vmax OR Ui
Isc OR Ii	≥	Imax OR Ii
Po	≥	Pmax OR Pi
Co	≥	Ci + Ccable
Lo	≥	Li + Lcable

3. RESISTANCE BETWEEN INTRINSICALLY SAFE GROUND AND EARTH GROUND MUST BE LESS THAN 1.0 Ohm.
2. DUST-TIGHT CONDUIT SEAL MUST BE USED WHEN INSTALLED IN CLASS II AND CLASS III ENVIRONMENTS.
1. WIRING MUST COMPLY WITH THE NATIONAL ELECTRICAL CODE ANSI/NFPA 70 FOR INSTALLATION OF INTRINSICALLY SAFE SYSTEMS FOR HAZARDOUS (CLASSIFIED) LOCATIONS"
(EXCEPT CHAPTER 5 FOR FISCO INSTALLATIONS) AND THE CANADIAN ELECTRICAL CODE (CSA C22.1).

NOTES: UNLESS OTHERWISE SPECIFIED

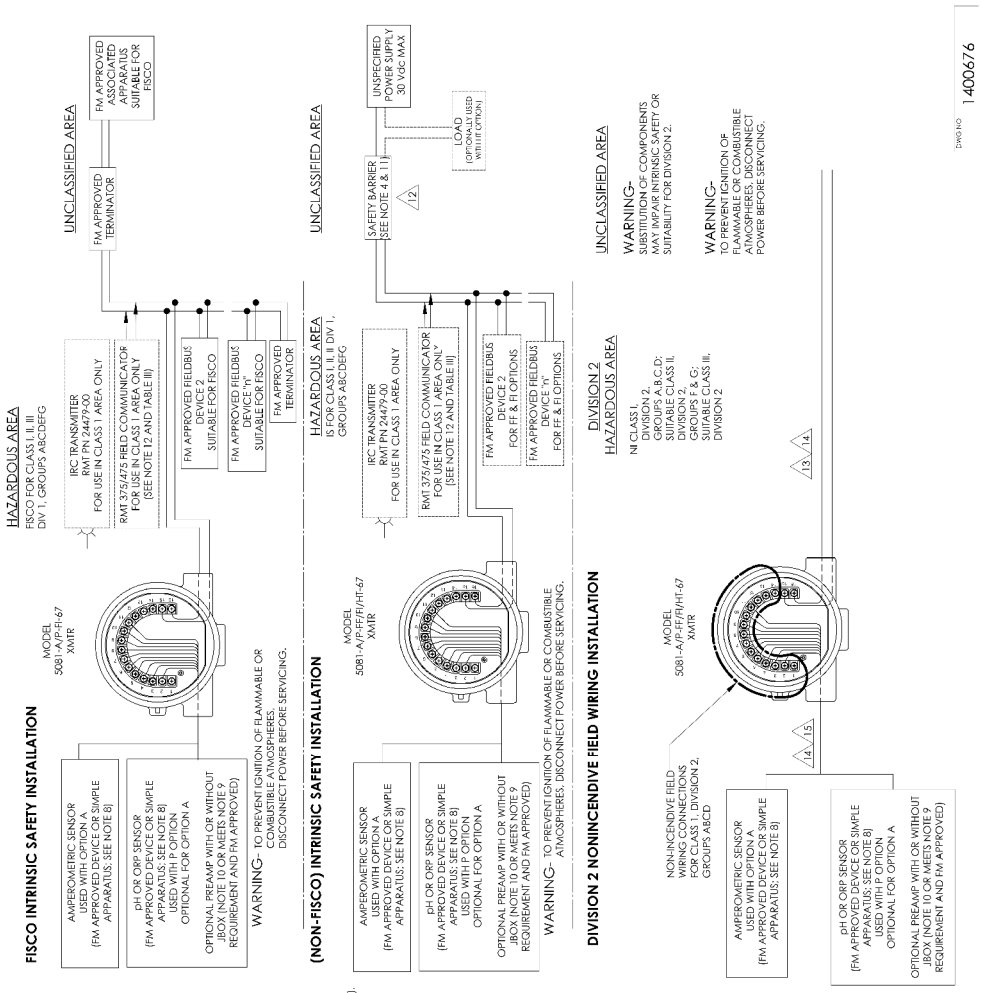

TABLE I

GAS GROUPS	5081-A/P OUTPUT PARAMETERS Co [µF]		Lo [mH]
	H / Hi		III
A, B	0.96	3.1	7.5
C	5.99	12.3	9.8
D	21.69	25	19.8

TABLE II

OUTPUT PARAMETERS	5081 A/P OUTPUT 1 (HART) / 2	
	H / Hi	III
Vt	13.02 Vdc	13.02 Vdc
It	105.44 mA	130 mA
Pt	1.47 mW	192 mW

TABLE III

5081-A/P INPUT PARAMETERS, SUPPLY/SIGNAL TERMINALS, TB1 PINS 15 & 16						Voc MAX (Vdc)	Isc MAX (mA)
OPTIONS	Vmax=(Voc)	Imax (mA)	Pmax (W)	Ci (nF)	Li (mH)		
FF (FISCO) GROUP IIB/CLASS C	17.5	380	5.32	5	10		
FF (FISCO) GROUP IIC/CLASS E	17.5	380	5.32	5	10		
FF (NON-FISCO)	30	300	2.5	27.8	10		
HT (NON-FISCO)	30	200	0.9	27.8	0		
375/475	PER FF PARAMETERS					32	570
		30	1	200	1	0.0	1.9

17. THE CAPACITANCE AND INDUCTANCE CONNECTED TO THE SENSOR TERMINALS MUST NOT EXCEED THE VALUES SPECIFIED IN TABLE I.
16. NO REVISION TO DRAWING WITHOUT FM APPROVAL.
/15. NON-INCENDIVE FIELD WIRING METHODS MAY BE USED FOR CONNECTING SENSORS TO THE INSTRUMENT. ATTACHED SENSORS MUST BE FM APPROVED AS NON-INCENDIVE FOR CLASS 1, DIVISION 2, GROUPS ABCD WITH INPUT VALUES OF: Vmax ≥ Voc (Vt) AND Imax ≥ Isc (It) LISTED IN TABLE II AND THE Ci AND Li OF THE SENSOR AND INTERCONNECTED WIRING MUST BE ≤ Co AND Lo LISTED IN TABLE 1 OR BE CLASSIFIED AS "SIMPLE APPARATUS". SIMPLE APPARATUS ARE DEVICES WHICH ARE INCAPABLE OF GENERATING OR STORING MORE THAN 1.2 V, 0.1 A, 25 mW OR 20 µJ. (AMPEROMETRIC SENSORS WITHOUT PREAMP QUALIFY AS SIMPLE APPARATUS).
/14. INSTALLATION TO BE IN ACCORDANCE WITH THE NATIONAL ELECTRICAL CODE.
/13. DIVISION 2 WIRING METHOD PER THE NEC (EXCLUDING NONINCENDIVE FIELD WIRING).
/12. INTRINSICALLY SAFE APPARATUS (5081, IRC TRANSMITTER, 375/475 FIELD COMMUNICATOR, FIELDBUS TERMINATOR OR ANY OTHER FIELDBUS DEVICES) AND ASSOCIATED APPARATUS (SAFETY BARRIER) SHALL MEET THE FOLLOWING REQUIREMENTS: THE VOLTAGE (Vmax) AND CURRENT (Imax) OF THE INTRINSICALLY SAFE APPARATUS MUST BE ≥ THE VOLTAGE AND CURRENT (Voc, Isc) OF THE ASSOCIATED APPARATUS (SAFETY BARRIER). IN ADDITION, THE MAXIMUM UNPROTECTED CAPACITANCE (Ci) AND INDUCTANCE (Li) OF THE INTRINSICALLY SAFE APPARATUS, INCLUDING INTERCONNECTING WIRING, MUST BE EQUAL OR LESS THAN THE CAPACITANCE (Cca) AND INDUCTANCE (Lo) WHICH CAN BE SAFELY CONNECTED TO THE APPARATUS. (REF. TABLE III)
11. FOR INTRINSIC SAFETY (NON-FISCO) INSTALLATION, ANY SINGLE SHUNT ZENER DIODE SAFETY BARRIER APPROVED TO THE FOLLOWING PARAMETERS MAY BE USED IN THE SENSOR SUPPLY/SIGNAL TERMINALS ON TB1, PINS 15 AND 16.
Voc OR Vt NOT GREATER THAN 30 V FOR FF, FI AND HT OPTIONS
Isc OR It NOT GREATER THAN 300 mA FOR FF AND FI OPTIONS, OR 200 mA FOR HT OPTION
Pmax NOT GREATER THAN 1.3 W FOR FF AND FI OPTIONS, OR 0.9 mW FOR HT OPTION
10. PREAMPLIFIER PART NUMBER 23446-00 (NON-FISCO) AND 23446-01 (FISCO) MAY BE USED WITH THE 5081P,D,D/2 INTEGRAL PREAMPHER. A WEATHER RESISTANT ENCLOSURE MUST HOUSE THE TYPE 23446-00 PREAMPLIFIER. OTHER PREAMPS OR PREAMP CONTAINING SENSORS MAY BE USED IF OVERALL C AND L ARE < THE LIMITS DETAILED IN NOTE 9 AND THE MAXIMUM ENTITY PARAMETERS ARE > THOSE IN TABLE II.
9. THE 5081-A/P INCLUDES INTEGRAL PREAMPLIFIER CIRCUITRY. AN EXTERNAL PREAMPLIFIER MAY ALSO BE USED. THE OUTPUT OF THE PREAMPLIFIER MUST BE LINEAR WITH RESPECT TO SENSOR CURRENT. THE CAPACITANCE AND INDUCTANCE OF THE LOAD CONNECTED TO THE SENSOR TERMINALS MUST NOT EXCEED THE VALUES SPECIFIED IN TABLE I WHERE Co > Ci (SENSOR) + Ccable AND Lo > Li(SENSOR) + Lcable.
8. SENSORS SHALL BE FM APPROVED IN ACCORDANCE WITH THE ENTITY REQUIREMENTS OR MEET THE REQUIREMENTS OF SIMPLE APPARATUS AS DEFINED IN ANSI/ISA RP12.6 AND THE NEC. ANSI/NFPA 70. THEY CAN DISSIPATE NOT MORE THAN 1.5 W. SEE TABLE I, II, III.
7. THE CONFIGURATION OF ASSOCIATED APPARATUS MUST BE FM APPROVED UNDER THE ASSOCIATED CONCEPT.
6. CONTROL EQUIPMENT CONNECTED TO ASSOCIATED APPARATUS MUST NOT USE OR GENERATE MORE THAN 250 Vrms OR Vdc.
5. ASSOCIATED APPARATUS MANUFACTURER'S INSTALLATION DRAWING MUST BE FOLLOWED WHEN INSTALLING THIS EQUIPMENT.
4. THE ENTITY CONCEPT ALLOWS INTERCONNECTION OF INTRINSICALLY SAFE APPARATUS WITH ASSOCIATED APPARATUS WHEN THE FOLLOWING IS TRUE:

FIELD DEVICE INPUT	≥	ASSOCIATED APPARATUS OUTPUT
Vmax OR Ui	≥	Voc, Vt OR Uo
Imax OR Ii	≥	Isc, It OR Io
Pmax OR Pi	≥	Po
Ci + 3Ccable	≤	Ca, Ct OR Co (FOR FISCO INSTALLATIONS)
Li + 3Lcable (FOR FISCO INSTALLATIONS)	≤	La, Lt OR Lo; Ic/Rc ≤ Ia/Ra OR Lo/Ro) AND Li/Ri ≤ Ia/Ra OR Lo/Ro)
Ci + Ccable	≤	Ca, Ct OR Co (FOR FISCO INSTALLATIONS)
Li + Lcable	≤	La, Lt OR Lo (FOR FISCO INSTALLATIONS)

3. RESISTANCE BETWEEN INTRINSICALLY SAFE GROUND AND EARTH GROUND MUST BE LESS THAN 1.0 Ohm.
2. DUST-TIGHT CONDUIT SEAL MUST BE USED WHEN INSTALLED IN CLASS II AND CLASS III ENVIRONMENTS.
1. INSTALLATION SHOULD BE IN ACCORDANCE WITH ANSI/ISA RP12.06 "INSTALLATION OF INTRINSICALLY SAFE SYSTEMS FOR HAZARDOUS (CLASSIFIED) LOCATIONS" EXCEPT CHAPTER 5 FOR FISCO INSTALLATIONS) AND THE NATIONAL ELECTRICAL CODE (ANSI/NFPA 70)SECTIONS 504 AND 505.

NOTES: UNLESS OTHERWISE SPECIFIED

TABLE I

GAS GROUPS	C OPTION OUTPUT PARAMETERS		
	Ca (µf)	La (mH)	
		FF / FI	HT
A, B	12.05	0.4	0.5
C	490.05	1.6	2.0
D	9990.05	3.1	3.7

TABLE II

C OPTION OUTPUT PARAMETERS	5081C TB1, PINS 1 THRU 12	
	FF / FI	HT
Vt	6.51 Vdc	6.51 Vdc
It	302.59 mA	280 mA
Pt	365 mW	442 mW

TABLE III

5081C/T INPUT PARAMETERS, SUPPLY/SIGNAL TERMINALS, TB1 PINS 15 & 16						Voc MAX OUT: (Vdc)	Isc MAX OUT: (mA)
OPTIONS	Vmax(Vcc)	Imax (mA)	Pmax (W)	Ci (nF)	Li (Uh)		
FI (FISCO) GROUPS IIB/CDEFG	17.5	380	5.32	5	10		
FI (FISCO) GROUPS IIC/ABCDEFG	17.5	360	2.52	5	10		
FF/FI (NON-FISCO)	30	300	1.3	27.8	0		
HT (NON-FISCO)	30	200	0.9	27.8	0		
ENTITY PARAMETERS: FIELD COMMUNICATOR							
375/475	30	200	1	.00	0.0	1.9	32

17. FOR THE C OPTION, THE CAPACITANCE AND INDUCTANCE CONNECTED TO THE SENSOR TERMINALS MUST NOT EXCEED THE VALUES SPECIFIED IN TABLE I.

16. FOR C OPTION, SENSORS SHALL BE FM APPROVED IN ACCORDANCE WITH THE ENTITY REQUIREMENTS OR MEET THE REQUIREMENTS OF SIMPLE APPARATUS AS DEFINED IN ANSI/ISA RP12.6 AND THE NEC, ANSI/NFPA 70. THEY CANNOT GENERATE NOR STORE MORE THAN 1.5V, 0.1mA, 25mW OR A PASSIVE COMPONENT THAT DOES NOT DISSIPATE MORE THAN 1.3W. SEE TABLES I AND II.

△15 NON-INCENDIVE FIELD WIRING METHODS MAY BE USED FOR CONNECTING SENSORS TO THE INSTRUMENT. ATTACHED SENSORS MUST BE FM APPROVED AS NON-INCENDIVE FOR CLASS 1,DIVISION 2, GROUPS ABCD WITH INPUT VALUES OF Vmax AND Imax ≥ Voc (Vt) AND Isc (It) LISTEDIN TABLE II AND THE Ci AND Li OF THE SENSOR AND INTERCONNECTED WIRING MUST BE ≤ Ca AND La LISTED IN TABLE I OR BE CLASSIFIED AS "SIMPLE APPARATUS". SIMPLE APPARATUS ARE DEVICES WHICH ARE INCAPABLE OF GENERATING OR STORING MORE THAN 1.2 V, 0.1 A, 25 mW OR 20 µJ (CONTACTING CONDUCTIVITY SENSORS QUALIFY AS SIMPLE APPARATUS).

△14 INSTALLATION TO BE IN ACCORDANCE WITH THE NATIONAL ELECTRICAL CODE.

△13 DIVISION 2 WIRING METHOD PER THE NEC (EXCLUDING NONINCENDIVE FIELD WIRING).

△12 INTRINSICALLY SAFE APPARATUS (5081, IRC TRANSMITTER, 375/475 FIELD COMMUNICATOR, FIELDBUS TERMINATOR OR ANY OTHER FIELDBUS DEVICES) AND ASSOCIATED APPARATUS (SAFETY BARRIER) SHALL MEET THE FOLLOWING REQUIREMENTS: THE VOLTAGE (Vmax) AND CURRENT (Imax) OF THE INTRINSICALLY SAFE APPARATUS MUST BE EQUAL TO OR GREATER THAN THE VOLTAGE (Voc OR Vt) AND CURRENT (Isc OR It) WHICH CAN BE DELIVERED BY THE ASSOCIATED APPARATUS (SAFETY BARRIER). IN ADDITION, THE MAXIMUM UNPROTECTED CAPACITANCE (Ci) AND INDUCTANCE (Li) OF THE INTRINSICALLY SAFE APPARATUS, INCLUDING INTERCONNECTING WIRING, MUST BE EQUAL OR LESS THAN THE CAPACITANCE (Ca) AND INDUCTANCE (La) WHICH CAN BE SAFELY CONNECTED TO THE APPARATUS. (REF. TABLE III)

△11 FOR (NON-FISCO) INTRINSIC SAFETY INSTALLATION, ANY SINGLE SHUNT ZENER DIODE SAFETY BARRIER APPROVED BY FM HAVING THE FOLLOWING OUTPUT PARAMETERS:
SUPPLY/SIGNAL TERMINALS ON TB1, PINS 15 AND 16.
Voc OR Vt NOT GREATER THAN 30 V FOR FF, FI AND HT OPTIONS
Isc OR It NOT GREATER THAN 300 mA FOR FF AND FI OPTIONS, OR 200 mA FOR HT OPTION
Pmax NOT GREATER THAN 1.3 W FOR FF AND FI OPTIONS, OR 0.9 mW FOR HT OPTION.

△10 FOR T OPTION, MAXIMUM CABLE LENGTH IS 250 FEET.

9. USE SUPPLY WIRES SUITABLE FOR 5°C ABOVE SURROUNDING AMBIENT.
8. NO REVISION TO DRAWING WITHOUT PRIOR FM APPROVAL.
7. THE CONFIGURATION OF ASSOCIATED APPARATUS MUST BE FM APPROVED UNDER THE ASSOCIATED CONCEPT.

6. CONTROL EQUIPMENT CONNECTED TO ASSOCIATED APPARATUS MUST NOT USE OR GENERATE MORE THAN 250 Vrms OR Vdc.

5. ASSOCIATED APPARATUS MANUFACTURER'S INSTALLATION DRAWING MUST BE FOLLOWED WHEN INSTALLING THIS EQUIPMENT.

4. THE ENTITY CONCEPT ALLOWS INTERCONNECTION OF INTRINSICALLY SAFE APPARATUS WITH ASSOCIATED APPARATUS WHEN THE FOLLOWING IS TRUE:

FIELD DEVICE INPUT		ASSOCIATED APPARATUS OUTPUT
Vmax OR Ui	≥	Voc, Vt OR Uo
Imax OR Ii	≥	Isc, It OR Io
Pmax OR Pi	≥	Po
3Ci + 3Ccable	≤	Ca, Ct OR Co (FOR FISCO INSTALLATIONS)
3Li + 3Lcable (FOR FISCO INSTALLATIONS)	≤	La, Lt OR Lo; Lc/Rc ≤ (La/Ra OR Lo/Ro) AND Li/Ri ≤ (La/Ra OR Lo/Ro)
Ci + Ccable	≤	Ca, Ct OR Co (FOR FIELDBUS (NON-FISCO) INSTALLATIONS)
Li + Lcable	≤	La, Lt OR Lo (FOR FIELDBUS (NON-FISCO) INSTALLATIONS)

3. RESISTANCE BETWEEN INTRINSICALLY SAFE GROUND AND EARTH GROUND MUST BE LESS THAN 1.0 Ohm.

2. DUST-TIGHT CONDUIT SEAL MUST BE USED WHEN INSTALLED IN CLASS II AND CLASS III ENVIRONMENTS.

1. INSTALLATION SHOULD BE IN ACCORDANCE WITH ANSI/ISA RP12.06 "INSTALLATION OF INTRINSICALLY SAFE SYSTEMS FOR HAZARDOUS (CLASSIFIED) LOCATIONS" (EXCEPT CHAPTER 5 FOR FISCO INSTALLATIONS) AND THE NATIONAL ELECTRICAL CODE (ANSI/NFPA 70) SECTIONS 504 AND 505.

NOTES: UNLESS OTHERWISE SPECIFIED

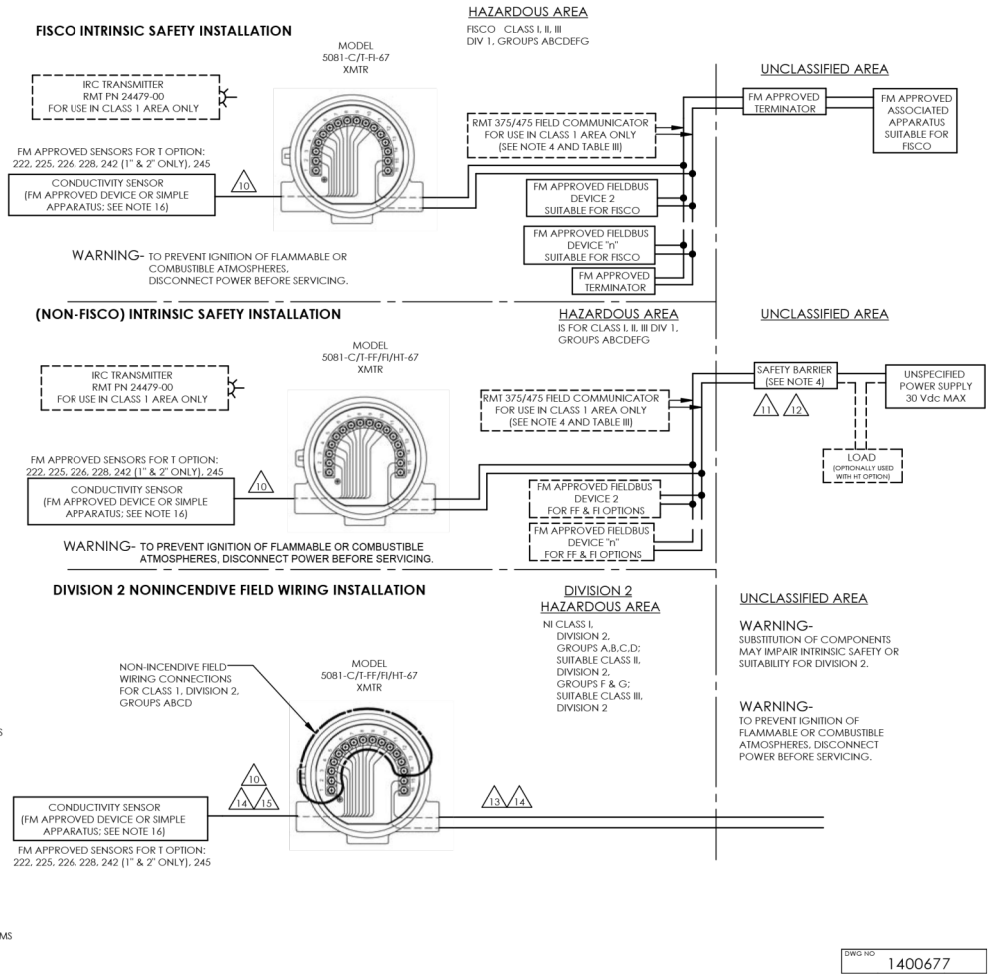

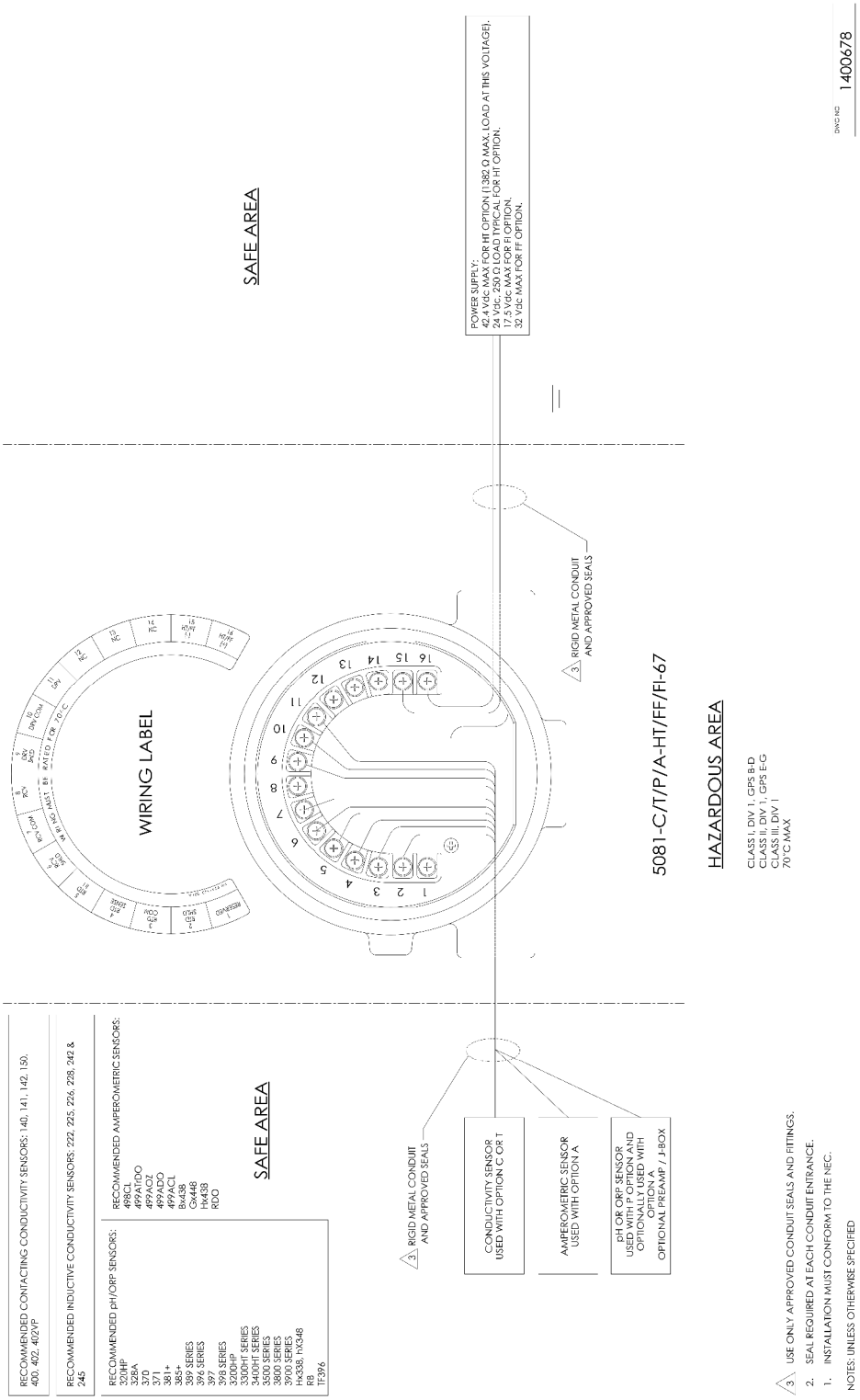
RECOMMENDED CONTACTING CONDUCTIVITY SENSORS: 140, 141, 142, 150, 400, 402, 402VP
RECOMMENDED INDUCTIVE CONDUCTIVITY SENSORS: 222, 225, 226, 228, 242 & 245
RECOMMENDED pH/ORP SENSORS:
320HP
328A
370
371
381+
385+
389 SERIES
396 SERIES
397
398 SERIES
3200HT SERIES
3300HT SERIES
3400HT SERIES
3500 SERIES
3800 SERIES
3900 SERIES
Hx438, hX348
PER
TF396
RECOMMENDED AMPEROMETRIC SENSORS:
498CL
499AtDO
499AOZ
499ADO
499ACL
Rx455
Cx448
Hx438
RDO
SAFE AREA
WIRING LABEL
SAFE AREA
3. RIGID METAL CONDUIT AND APPROVED SEALS
CONDUCTIVITY SENSOR USED WITH OPTION C OR T
AMPEROMETRIC SENSOR USED WITH OPTION A
pH OR ORP SENSOR USED WITH P OPTION AND OPTIONALLY USED WITH OPTION A
OPTIONAL PREAMP / J-BOX
POWER SUPPLY:
42.4 Vdc MAX FOR HT OPTION (1382 Ω MAX. LOAD AT THIS VOLTAGE).
24 Vdc, 250 Ω LOAD TYPICAL FOR HT OPTION.
17.5 Vdc MAX FOR FI OPTION.
32 Vdc MAX FOR FF OPTION.
3. RIGID METAL CONDUIT AND APPROVED SEALS
5081-C/T/P/A-HT/FF/FI-67
HAZARDOUS AREA
CLASS I, DIV 1, GPS B-D
CLASS II, DIV 1, GPS E-G
CLASS III, DIV 1
70°C MAX
3. USE ONLY APPROVED CONDUIT SEALS AND FITTINGS.
2. SEAL REQUIRED AT EACH CONDUIT ENTRANCE.
1. INSTALLATION MUST CONFORM TO THE NEC.
NOTES: UNLESS OTHERWISE SPECIFIED
DWG NO 1400678

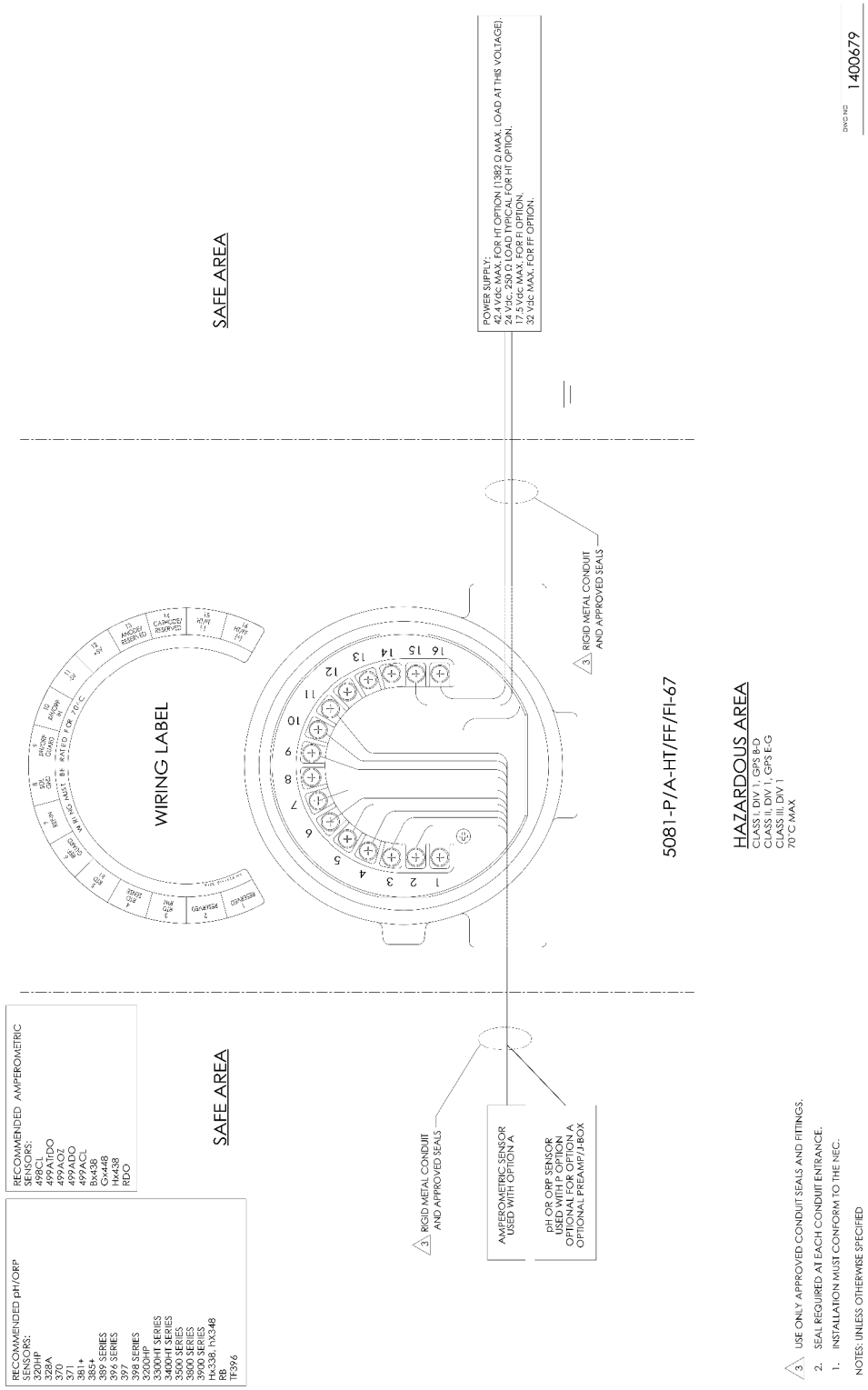
RECOMMENDED pH/ORP SENSORS:
320HP
328A
370
371
381+
383+
389 SERIES
396 SERIES
397
398 SERIES
3300HT
3300HT SERIES
3400HT SERIES
3500 SERIES
3800 SERIES
3900 SERIES
HX338, hX348
RB
TF396
RECOMMENDED AMPEROMETRIC SENSORS:
498CL
499ATrDO
499AOZ
499ADO
499ACL
BxA38
GxA48
HxA38
RDO
SAFE AREA
WIRING LABEL
SAFE AREA
3. RIGID METAL CONDUIT AND APPROVED SEALS
AMPEROMETRIC SENSOR USED WITH OPTION A
pH OR ORP SENSOR USED WITH P OPTION OPTIONAL FOR OPTION A OPTIONAL PREAMP/J-BOX
POWER SUPPLY:
42.4 Vdc MAX. FOR HT OPTION (1382 Ω MAX. LOAD AT THIS VOLTAGE).
24 Vdc, 250 Ω LOAD TYPICAL FOR HT OPTION.
17.5 Vdc MAX. FOR FI OPTION.
32 Vdc MAX. FOR FF OPTION.
3. RIGID METAL CONDUIT AND APPROVED SEALS
5081-P/A-HT/FF/FI-67
HAZARDOUS AREA
CLASS I, DIV 1, GPS B-D
CLASS II, DIV 1, GPS E-G
CLASS III, DIV 1
70° C MAX
3. USE ONLY APPROVED CONDUIT SEALS AND FITTINGS.
2. SEAL REQUIRED AT EACH CONDUIT ENTRANCE.
1. INSTALLATION MUST CONFORM TO THE NEC.
NOTES: UNLESS OTHERWISE SPECIFIED
DWG NO 1400679

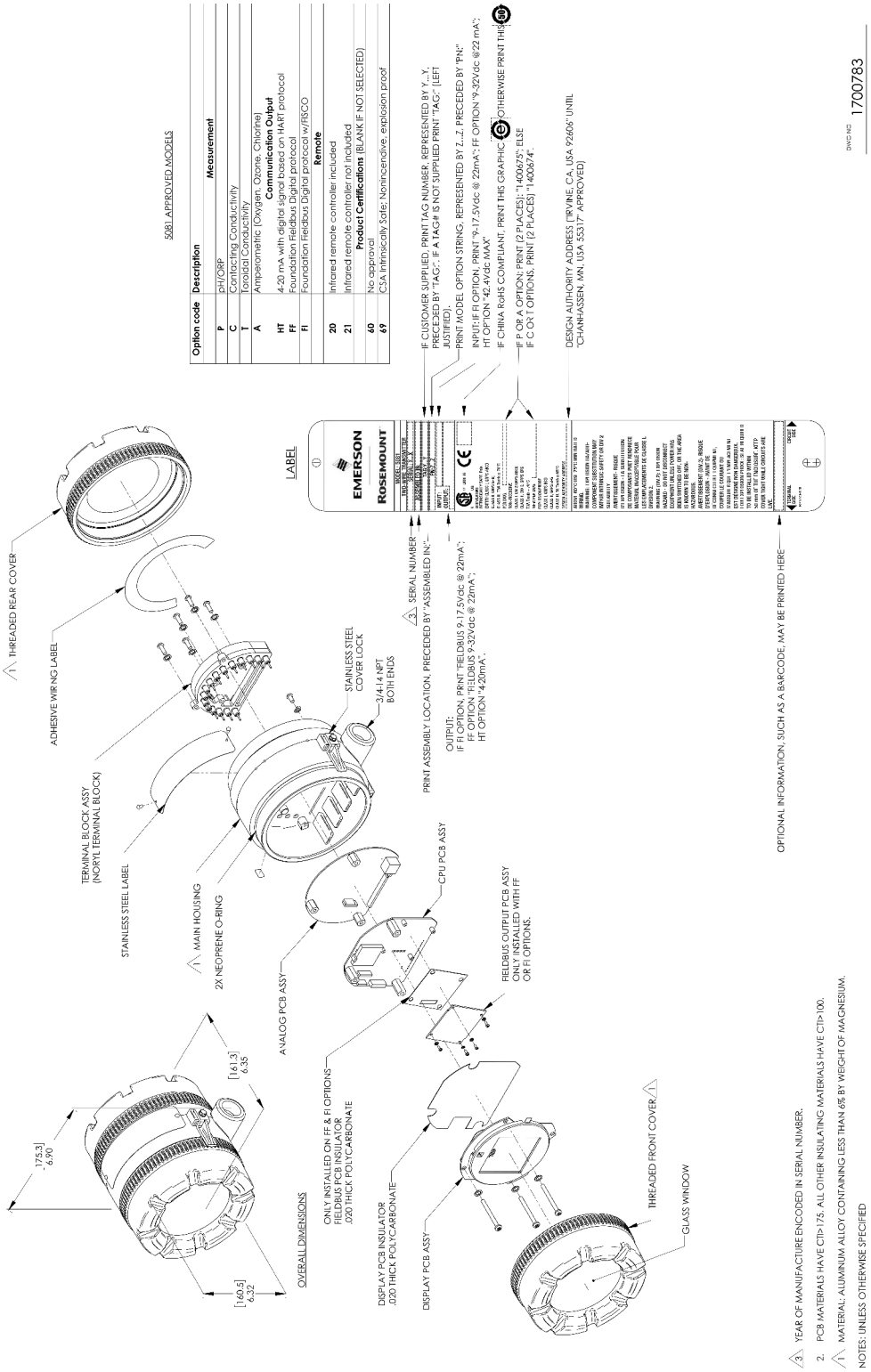
5081 APPROVED MODELS
Option code
Description
Measurement
P
pH/ORP
C
Contacting Conductivity
T
Toroidal Conductivity
A
Amperometric (Oxygen, Ozone, Chlorine)
Communication Output
HT
4-20 mA with digital signal based on HART protocol
FF
Foundation Fieldbus Digital protocol
FI
Foundation Fieldbus Digital protocol w/FISCO
Remote
20
Infrared remote controller included
21
Infrared remote controller not included
Product Certifications (BLANK IF NOT SELECTED)
60
No approval
69
CSA Intrinsically Safe; Nonincendive, explosion proof
LABEL
EMERSON
ROSEMOUNT
IF CUSTOMER SUPPLIED, PRINT TAG NUMBER, REPRESENTED BY X...X, PRECEDED BY "TAG:". IF A TAG# IS NOT SUPPLIED PRINT "TAG:" (LEFT JUSTIFIED).
PRINT MODEL OPTION STRING, REPRESENTED BY Z...Z, PRECEDED BY "PN#".
INPUT: IF FI OPTION, PRINT "9-17.5Vdc @ 22mA"; IF FF OPTION "9-32Vdc @22 mA"; HT OPTION "42.4Vdc MAX".
IF CHINA RoHS COMPLIANT, PRINT THIS GRAPHIC
OTHERWISE PRINT THIS
IF P OR A OPTION: PRINT (2 PLACES): "1400675"; ELSE IF C OR T OPTIONS, PRINT (2 PLACES) "1400674".
DESIGN AUTHORITY ADDRESS: "IRVINE, CA, USA 92606" UNTIL "CHANHASSEN, MN, USA 55317" APPROVED)
PRINT ASSEMBLY LOCATION, PRECEDED BY "ASSEMBLED IN:"
SERIAL NUMBER
OUTPUT:
IF FI OPTION, PRINT "FIELDBUS 9-17.5Vdc @ 22mA";
FF OPTION "FIELDBUS 9-32Vdc @ 22mA";
HT OPTION "4-20mA".
OPTIONAL INFORMATION, SUCH AS A BARCODE, MAY BE PRINTED HERE
DWG NO 1700783
THREADED REAR COVER
ADHESIVE WIRING LABEL
TERMINAL BLOCK ASSY (NORYL TERMINAL BLOCK)
STAINLESS STEEL LABEL
MAIN HOUSING
2X NEOPRENE O-RING
ANALOG PCB ASSY
STAINLESS STEEL COVER LOCK
3/4-14 NPT BOTH ENDS
CPU PCB ASSY
FIELDBUS OUTPUT PCB ASSY ONLY INSTALLED WITH FF OR FI OPTIONS.
ONLY INSTALLED ON FF & FI OPTIONS
FIELDBUS PCB INSULATOR
.020 THICK POLYCARBONATE
DISPLAY PCB INSULATOR
.020 THICK POLYCARBONATE
DISPLAY PCB ASSY
THREADED FRONT COVER
GLASS WINDOW
OVERALL DIMENSIONS
[175.3] 6.90
[161.3] 6.35
[140.5] 6.22
3. YEAR OF MANUFACTURE ENCODED IN SERIAL NUMBER.
2. PCB MATERIALS HAVE CTI>175. ALL OTHER INSULATING MATERIALS HAVE CTI>100.
1. MATERIAL: ALUMINUM ALLOY CONTAINING LESS THAN 6% BY WEIGHT OF MAGNESIUM.
NOTES: UNLESS OTHERWISE SPECIFIED

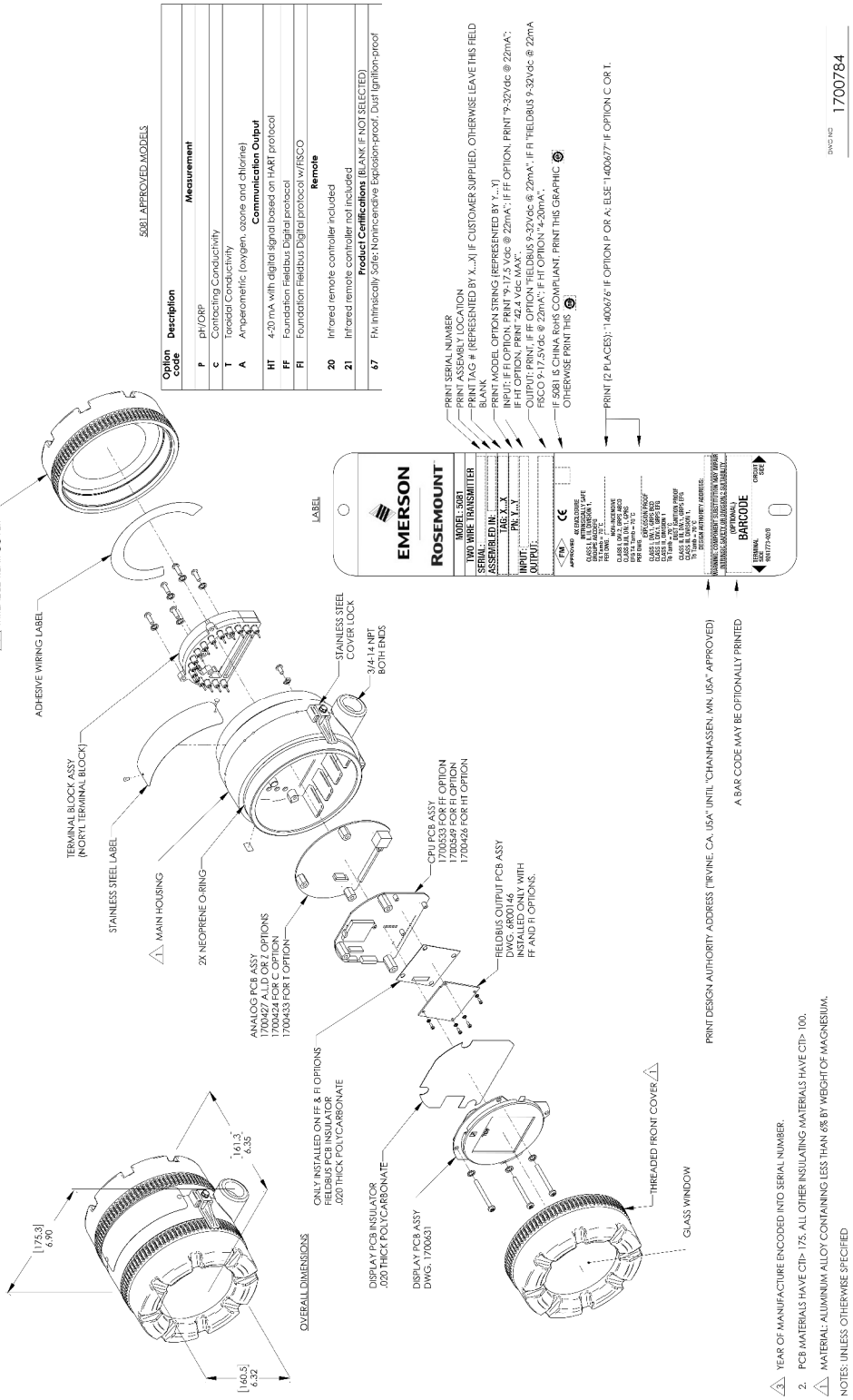
5081 APPROVED MODELS
Option code | Description | Measurement
P | pH/ORP
c | Contacting Conductivity
T | Toroidal Conductivity
A | Amperometric (oxygen, ozone and chlorine)
Communication Output
HT | 4-20 mA with digital signal based on HART protocol
FF | Foundation Fieldbus Digital protocol
FI | Foundation Fieldbus Digital protocol w/FISCO
Remote
20 | Infrared remote controller included
21 | Infrared remote controller not included
Product Certifications (BLANK IF NOT SELECTED)
67 | FM Intrinsically Safe; Nonincendive Explosion-proof, Dust Ignition-proof
THREADED REAR COVER
ADHESIVE WIRING LABEL
TERMINAL BLOCK ASSY (NORYL TERMINAL BLOCK)
STAINLESS STEEL LABEL
MAIN HOUSING
2X NEOPRENE O-RING
STAINLESS STEEL COVER LOCK
3/4-14 NPT BOTH ENDS
ANALOG PCB ASSY 1700427 A.L.D OR Z OPTIONS 1700424 FOR C OPTION 1700433 FOR T OPTION
CPU PCB ASSY 1700533 FOR FF OPTION 1700549 FOR FI OPTION 1700426 FOR HT OPTION
FIELDBUS OUTPUT PCB ASSY DWG. 6R00146 INSTALLED ONLY WITH FF AND FI OPTIONS.
ONLY INSTALLED ON FF & FI OPTIONS FIELDBUS PCB INSULATOR .020 THICK POLYCARBONATE
DISPLAY PCB INSULATOR .020 THICK POLYCARBONATE
DISPLAY PCB ASSY DWG. 1700631
THREADED FRONT COVER
GLASS WINDOW
OVERALL DIMENSIONS
[175.3] 6.90
[161.3] 6.35
[160.5] 6.32
LABEL
EMERSON
ROSEMOUNT
MODEL: 5081
TWO WIRE TRANSMITTER
SERIAL:
ASSEMBLED IN:
TAG: X...X
PN: Y...Y
INPUT:
OUTPUT:
BARCODE
PRINT SERIAL NUMBER
PRINT ASSEMBLY LOCATION
PRINT TAG # (REPRESENTED BY X...X) IF CUSTOMER SUPPLIED, OTHERWISE LEAVE THIS FIELD BLANK
PRINT MODEL OPTION STRING (REPRESENTED BY Y...Y)
INPUT: IF FI OPTION, PRINT "9-17.5 Vdc @ 22mA"; IF FF OPTION, PRINT "9-32Vdc @ 22mA"; IF HT OPTION, PRINT "42.4 Vdc MAX".
OUTPUT: PRINT, IF FF OPTION "FIELDBUS 9-32Vdc @ 22mA", IF FI "FIELDBUS 9-32Vdc @ 22mA FISCO 9-17.5Vdc @ 22mA"; IF HT OPTION "4-20mA".
IF 5081 IS CHINA RoHS COMPLIANT, PRINT THIS GRAPHIC
OTHERWISE PRINT THIS
PRINT (2 PLACES): "1400676" IF OPTION P OR A; ELSE "1400677" IF OPTION C OR T.
PRINT DESIGN AUTHORITY ADDRESS ("IRVINE, CA, USA" UNTIL "CHANHASSEN, MN, USA" APPROVED)
A BAR CODE MAY BE OPTIONALLY PRINTED
DWG NO 1700784
YEAR OF MANUFACTURE ENCODED INTO SERIAL NUMBER.
2. PCB MATERIALS HAVE CTI> 175. ALL OTHER INSULATING MATERIALS HAVE CTI> 100.
MATERIAL: ALUMINUM ALLOY CONTAINING LESS THAN 6% BY WEIGHT OF MAGNESIUM.
NOTES: UNLESS OTHERWISE SPECIFIED

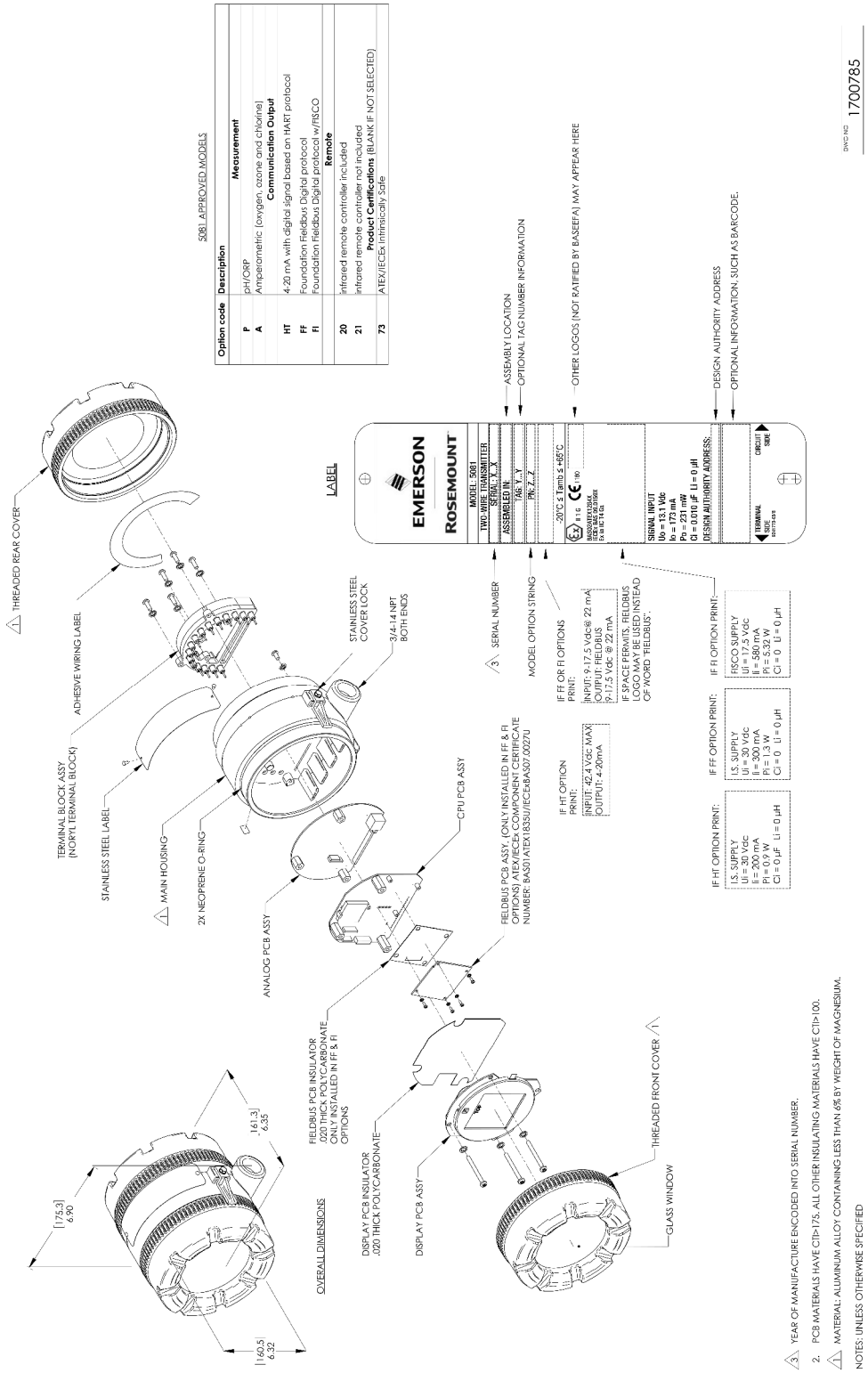
5081 APPROVED MODELS
Option code
Description
Measurement
P
pH/ORP
A
Amperometric (oxygen, ozone and chlorine)
Communication Output
HT
4-20 mA with digital signal based on HART protocol
FF
Foundation Fieldbus Digital protocol
FI
Foundation Fieldbus Digital protocol w/FISCO
Remote
20
Infrared remote controller included
21
Infrared remote controller not included
Product Certifications (BLANK IF NOT SELECTED)
73
ATEX/IECEx Intrinsically Safe
LABEL
EMERSON
ROSEMOUNT
MODEL : 5081
TWO WIRE TRANSMITTER
SERIAL : X_X
ASSEMBLED IN:
TAG: Y_Y
PN: Z_Z
-20°C ≤ Tamb ≤ +65°C
SIGNAL INPUT
Uo = 13.1 Vdc
Io = 77.1 mA
Po = 252 mW
Ci = 0.010 µF Li = 0 µH
DESIGN AUTHORITY ADDRESS:
TERMINAL SIDE
CIRCUIT SIDE
ASSEMBLY LOCATION
OPTIONAL TAG NUMBER INFORMATION
OTHER LOGOS (NOT RATIFIED BY BASEEFA) MAY APPEAR HERE
DESIGN AUTHORITY ADDRESS
OPTIONAL INFORMATION, SUCH AS BARCODE.
SERIAL NUMBER
MODEL OPTION STRING
IF FF OR FI OPTIONS PRINT:
INPUT: 9-17.5 Vdc@ 22 mA
OUTPUT: FIELDBUS
9-17.5 Vdc @ 22 mA
IF SPACE PERMITS, FIELDBUS LOGO MAY BE USED INSTEAD OF WORD "FIELDBUS".
IF HT OPTION PRINT:
INPUT: 42.4 Vdc MAX
OUTPUT: 4-20mA
IF HT OPTION PRINT:
IS. SUPPLY
Ui = 30 Vdc
Ii = 200 mA
Pi = 0.9 W
Ci = 0 µF Li = 0 µH
IF FF OPTION PRINT:
IS. SUPPLY
Ui = 30 Vdc
Ii = 300 mA
Pi = 1.3 W
Ci = 0 Li = 0 µH
IF FI OPTION PRINT:
FISCO SUPPLY
Ui = 17.5 Vdc
Ii = 380 mA
Pi = 5.32 W
Ci = 0 Li = 0 µH
THREADED REAR COVER
ADHESIVE WIRING LABEL
TERMINAL BLOCK ASSY (NORYL TERMINAL BLOCK)
STAINLESS STEEL LABEL
MAIN HOUSING
2X NEOPRENE O-RING
ANALOG PCB ASSY
STAINLESS STEEL COVER LOCK
3/4-14 NPT BOTH ENDS
CPU PCB ASSY
FIELDBUS PCB ASSY. (ONLY INSTALLED IN FF & FI OPTIONS) ATEX/IECEx COMPONENT CERTIFICATE NUMBER: BAS01ATEX1835U/IECExBAS07.0027U
FIELDBUS PCB INSULATOR .020 THICK POLYCARBONATE ONLY INSTALLED IN FF & FI OPTIONS
DISPLAY PCB INSULATOR .020 THICK POLYCARBONATE
DISPLAY PCB ASSY
THREADED FRONT COVER
GLASS WINDOW
OVERALL DIMENSIONS
175.3 6.90
161.3 6.35
160.5 6.32
3. YEAR OF MANUFACTURE ENCODED INTO SERIAL NUMBER.
2. PCB MATERIALS HAVE CTI>175. ALL OTHER INSULATING MATERIALS HAVE CTI>100.
1. MATERIAL: ALUMINUM ALLOY CONTAINING LESS THAN 6% BY WEIGHT OF MAGNESIUM.
NOTES: UNLESS OTHERWISE SPECIFIED
DWG NO 1700785

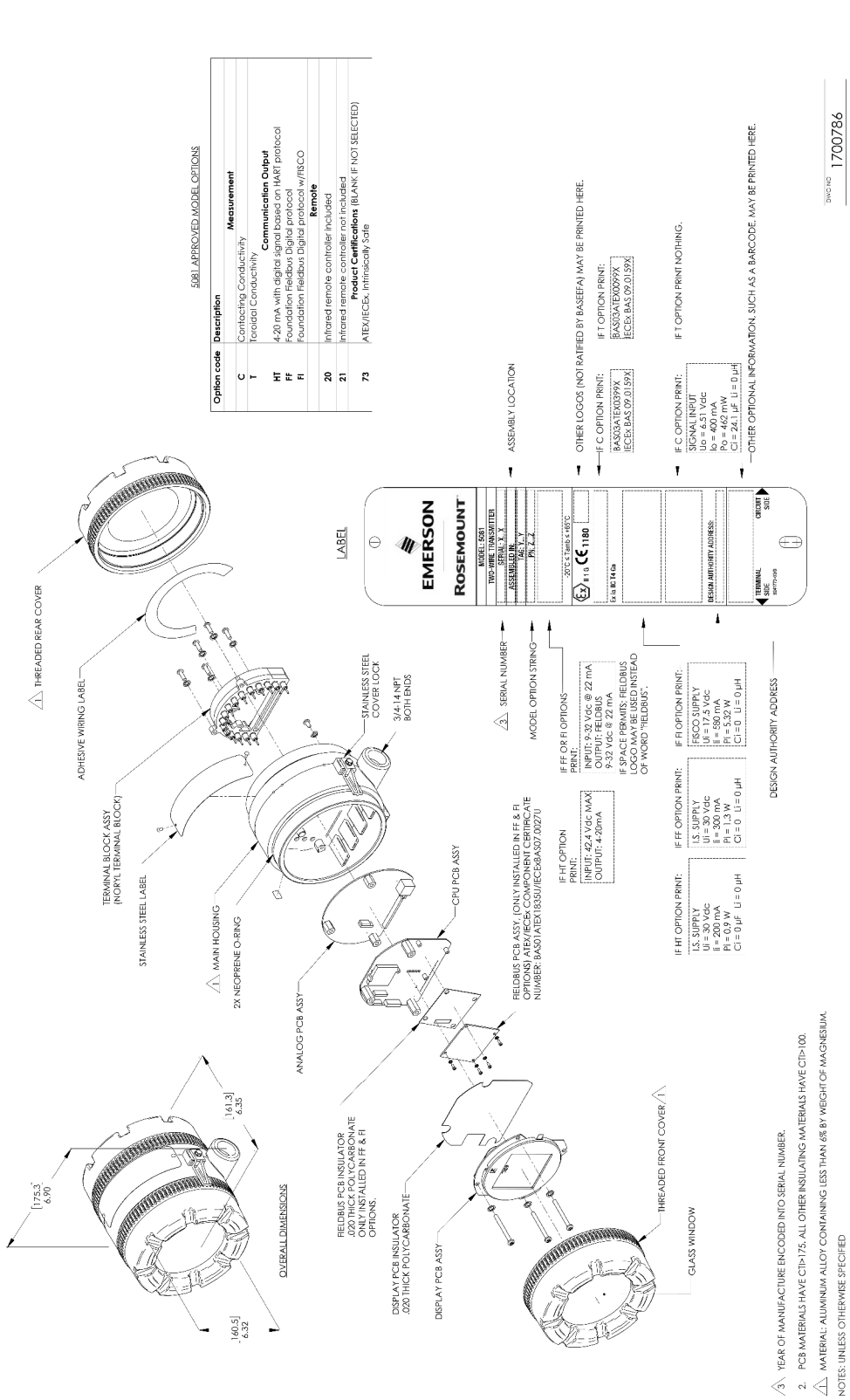
5081 APPROVED MODEL OPTIONS
Option code | Description
C | Contacting Conductivity
T | Toroidal Conductivity
Measurement
HT | 4-20 mA with digital signal based on HART protocol
FF | Foundation Fieldbus Digital protocol
FI | Foundation Fieldbus Digital protocol w/FISCO
Communication Output
20 | Infrared remote controller included
21 | Infrared remote controller not included
Remote
73 | ATEX/IECEx, Intrinsically Safe
Product Certifications (BLANK IF NOT SELECTED)
LABEL
EMERSON
ROSEMOUNT
MODEL: 5081
TWO-WIRE TRANSMITTER
SERIAL: X, X
ASSEMBLY IN:
TAG: Y, Y
PH: Z, Z
-20°C ≤ Tamb ≤ +65°C
Ex IIT1G CE 1180
Ex ia IIC T4 Ga
DESIGN AUTHORITY ADDRESS:
TERMINAL SIDE
CIRCUIT SIDE
ASSEMBLY LOCATION
OTHER LOGOS (NOT RATIFIED BY BASEEFA) MAY BE PRINTED HERE.
IF C OPTION PRINT:
BAS03ATEX0399X
IECEx BAS 09.0159X
IF T OPTION PRINT:
BAS03ATEX0099X
IECEx BAS 09.0159X
IF C OPTION PRINT:
SIGNAL INPUT
Uo = 6.51 Vdc
Io = 400 mA
Po = 462 mW
Ci = 24.1 µF Li = 0 µH
IF T OPTION PRINT NOTHING.
OTHER OPTIONAL INFORMATION, SUCH AS A BARCODE, MAY BE PRINTED HERE.
DWG NO 1700786
THREADED REAR COVER
ADHESIVE WIRING LABEL
TERMINAL BLOCK ASSY (NORYL TERMINAL BLOCK)
STAINLESS STEEL LABEL
MAIN HOUSING
2X NEOPRENE O-RING
STAINLESS STEEL COVER LOCK
3/4-14 NPT BOTH ENDS
ANALOG PCB ASSY
CPU PCB ASSY
FIELDBUS PCB ASSY, (ONLY INSTALLED IN FF & FI OPTIONS) ATEX/IECEx COMPONENT CERTIFICATE NUMBER: BAS01ATEX1835U/IECEx BAS07.0027U
IF HT OPTION PRINT:
INPUT: 42.4 Vdc MAX
OUTPUT: 4-20mA
IF FF OR FI OPTIONS PRINT:
INPUT: 9-32 Vdc @ 22 mA
OUTPUT: FIELDBUS
9-32 Vdc @ 22 mA
IF SPACE PERMITS: FIELDBUS LOGO MAY BE USED INSTEAD OF WORD "FIELDBUS".
IF HT OPTION PRINT:
I.S. SUPPLY
Ui = 30 Vdc
Ii = 200 mA
Pi = 0.9 W
Ci = 0 µF Li = 0 µH
IF FF OPTION PRINT:
I.S. SUPPLY
Ui = 30 Vdc
Ii = 300 mA
Pi = 1.3 W
Ci = 0 Li = 0 µH
IF FI OPTION PRINT:
FISCO SUPPLY
Ui = 17.5 Vdc
Ii = 580 mA
Pi = 5.32 W
Ci = 0 Li = 0 µH
DESIGN AUTHORITY ADDRESS
FIELDBUS PCB INSULATOR .020 THICK POLYCARBONATE ONLY INSTALLED IN FF & FI OPTIONS.
DISPLAY PCB INSULATOR .020 THICK POLYCARBONATE
DISPLAY PCB ASSY
THREADED FRONT COVER
GLASS WINDOW
OVERALL DIMENSIONS
[175.3] 6.90
[161.3] 6.35
[160.5] 6.32
3 YEAR OF MANUFACTURE ENCODED INTO SERIAL NUMBER.
2. PCB MATERIALS HAVE CTI>175. ALL OTHER INSULATING MATERIALS HAVE CTI>100.
1 MATERIAL: ALUMINUM ALLOY CONTAINING LESS THAN 6% BY WEIGHT OF MAGNESIUM.
NOTES: UNLESS OTHERWISE SPECIFIED

00809-0100-3581
Rev. AC
2019

GLOBAL HEADQUARTERS
Emerson Automation Solutions
6021 Innovation Blvd
Shakopee, MN 55379, USA
+1 800 999 9307 or +1 952 906 8888
F +1 952 949 7001
liquid.csc@emerson.com

NORTH AMERICA
Emerson Automation Solutions
8200 Market Blvd
Chanhassen, MN 55317
Toll Free +1 800 999 9307
F +1 952 949 7001
liquid.csc@emerson.com

EUROPE
Emerson Automation Solutions
Neuhofstrasse 19a P.O. Box 1046
CH-6340 Baar
Switzerland
T + 41 (0) 41 768 6111
F + 41 (0) 41 768 6300
liquid.csc@emerson.com

MIDDLE EAST AND AFRICA
Emerson Automation Solutions
Emerson FZE
Jebel Ali Free Zone
Dubai, United Arab Emirates, P.O. Box 17033
T +971 4 811 8100
F +971 4 886 5465
liquid.csc@emerson.com

ASIA-PACIFIC
Emerson Automation Solutions
1 Pandan Crescent
Singapore 128461
Singapore
T +65 777 8211
F +65 777 0947
liquid.csc@emerson.com

Linkedin.com/company/Emerson-Automation-Solutions
twitter.com/rosemount_news
Facebook.com/Rosemount
youtube.com/RosemountMeasurement

©2019 Emerson. All rights reserved.

The Emerson logo is a trademark and service mark of Emerson Electric Co. Rosemount is a mark of one of the Emerson family of companies. All other marks are the property of their respective owners.

ROSEMOUNT™

EMERSON™

Section 3.3.7

pH Sensor

TWO-WIRE TRANSMITTERS FOR pH, ORP, CONDUCTIVITY, OXYGEN, OZONE, AND CHLORINE

5081 Family of Two-wire Transmitters

- CHOICE OF COMMUNICATION PROTOCOL: HART® or FOUNDATION Fieldbus.
- LARGE, EASY-TO-READ two-line display shows the process measurement and temperature.
- SIMPLE MENU STRUCTURE.
- ROBUST TYPE 4X ENCLOSURE.
- INTRINSICALLY SAFE DESIGN allows the transmitter to be used in hazardous environments (with appropriate safety barriers).
- NON-VOLATILE MEMORY retains program settings and calibration data during power failures.



FEATURES AND APPLICATIONS

The 5081 family of transmitters can be used to measure pH, ORP, conductivity (using either contacting or toroidal sensors), resistivity, oxygen (ppm and ppb level), free chlorine, total chlorine, and ozone in a variety of process liquids. The 5081 is compatible with most Rosemount Analytical sensors. See the Specification sections for details.

The transmitter has a rugged, weatherproof, corrosion-resistant enclosure

The transmitter has a two-line seven-segment display. The main measurement appears in 0.8-inch (20 mm) high numerals. The secondary measurement, temperature (and pH if free chlorine is being measured), appears in 0.3-inch (7 mm) high digits.

Two digital communication protocols are available: HART (model option -HT) and Foundation Fieldbus (model options -FF or -FI). Digital communications allows access to AMS (Asset Management Solutions). Use AMS to set up and configure the transmitter, read process variables, and troubleshoot problems from a personal computer or host anywhere in the plant.

A handheld infrared remote controller or the HART and Foundation Fieldbus 375 communicator can also be used for programming and calibrating the transmitter. The remote controller works from as far away as six feet.



5081-P pH/ORP Transmitter

- CHANGING FROM pH TO ORP operation takes only seconds.
- AUTOMATIC TWO-POINT BUFFER CALIBRATION reduces errors.
- SOLUTION TEMPERATURE COMPENSATION converts measured pH to the pH at 25°C.
- CONTINUOUS DIAGNOSTICS monitor sensor performance and warn the user of failure (FAULT) or approaching failure (WARNING).

5081-C Contacting Conductivity Transmitter



- MEASURES CONDUCTIVITY, RESISTIVITY, OR CUSTOM CURVE VARIABLE.
- AUTOMATIC TC RECOGNITION simplifies start up.
- AUTOMATIC/MANUAL TEMPERATURE COMPENSATION ensures accurate monitoring and control.
- AUTOMATIC COMPENSATION FOR SENSOR CABLE RESISTANCE improves accuracy of high conductivity/ low resistivity measurements.
- BUILT-IN TEMPERATURE COMPENSATION ALGORITHMS include straight slope, ultra-pure water, cation conductivity, and no compensation.



5081-T Toroidal Conductivity Transmitter

- MEASURES CONDUCTIVITY, PERCENT CONCENTRATION, OR CUSTOM CURVE VARIABLE.
- AUTOMATIC TC RECOGNITION simplifies start up.
- AUTOMATIC/MANUAL TEMPERATURE COMPENSATION ensures accurate monitoring and control.
- BUILT-IN CONCENTRATION CURVES FOR 0-12% NaOH, 0-15% HCl, 0-25% and 96-99.7% H_2SO_4.
- PROGRAMMABLE REFERENCE TEMPERATURE enables temperature compensation to temperatures other than 25 degrees Celsius.
- AUTOMATIC COMPENSATION FOR SENSOR CABLE RESISTANCE improves accuracy of high conductivity measurements.

5081-A Amperometric Transmitter



- MEASURES dissolved oxygen (ppm and ppb level), free chlorine, total chlorine, and ozone.
- SECOND INPUT FOR A pH SENSOR ALLOWS AUTOMATIC pH CORRECTION for free chlorine measurement. No expensive, messy reagents needed.
- AUTOMATIC BUFFER RECOGNITON FOR pH CALIBRATION.

SPECIFICATIONS - GENERAL

Housing: Cast aluminum with epoxy coating. Type 4X (IP65). Neoprene O-ring cover seals. 160.5 mm x 175.3 mm x 161.3 mm (6.3 in. x 6.9 in. x 6.4 in.)

Dimensions: See drawing.

Conduit Openings: ¾-in. NPT

Ambient Temperature: -4 to 149°F (-20 to 65°C)

Storage Temperature: -22 to 176°F (-30 to 80°C)

Relative Humidity: 0 to 95% (non-condensing)

Weight/Shipping Weight: 10 lb/11 lb (4.5/5.0 kg)

Display: Two-line LCD; first line shows process variable (pH, ORP, conductivity, % concentration, oxygen, ozone, or chlorine), second line shows process temperature and output current. For pH/chlorine combination, the second line can be toggled to show pH. Fault and warning messages, when triggered, alternate with temperature and output readings.

First line: 7 segment LCD, 0.8 in. (20 mm) high.

Second line: 7 segment LCD, 0.3 in. (7mm) high.

Display board can be rotated 90 degrees clockwise or counterclockwise.

During calibration and programming, messages and prompts appear in the second line.

Temperature resolution: 0.1°C

Hazardous Location Approval: For details, see specifications for the measurement of interest.

RFI/EMI: EN-61326 CE

Digital Communications: For details, see specifications for the measurement of interest.

Specifications subject to change without notice.

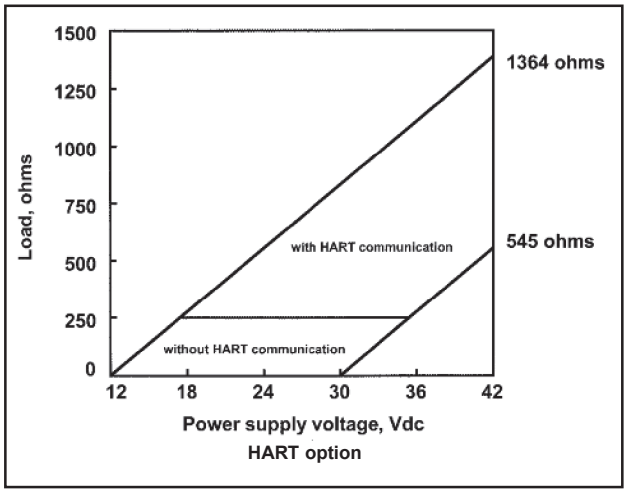

HART —
Power & Load Requirements:
Supply voltage at the transmitter terminals should be at least 12 Vdc. Power supply voltage should cover the voltage drop on the cable plus the external load resistor required for HART communications (250 Ω minimum). Minimum power supply voltage is 12 Vdc. Maximum power supply voltage is 42.4 Vdc (30 Vdc for intrinsically safe operation). The graph shows the supply voltage required to maintain 12 Vdc (upper line) and 30 Vdc (lower line) at the transmitter terminals when the current is 22 mA.

Analog Output: Two-wire, 4-20 mA output with superimposed HART digital signal. Fully scalable over the operating range of the sensor.

Output accuracy: ±0.05 mA

FOUNDATION fieldbus —

Power & Load Requirements: A power supply voltage of 9-32 Vdc at 22 mA is required.

Fieldbus **I**ntrinsically **S**afe **CO**ncept/FISCO-compliant versions of 5081 Foundation Fieldbus transmitter are available.

5081-P pH/ORP TRANSMITTER

FEATURES

The 5081-P Transmitter with the appropriate sensor can be configured for either pH or ORP (oxidation reduction potential) measurement of aqueous solutions. Housed in a Type 4X case, the 5081 can be located close to the sensor even in the harshest environments, including process, water or wastewater monitoring. Advanced features include automatic 2-point buffer calibration routine, automatic recognition of Pt100 or Pt1000 RTD, and menu-selected internal preamplifier. Predictive sensor diagnostic capability is possible through the impedance measurement of the pH glass membrane and reference electrode, fully supported by AMS. Solution temperature calibration allows the instrument to calculate and display the pH at 25°C when the temperature coefficient of the measured liquid is provided.

FUNCTIONAL SPECIFICATIONS

pH Range: 0 to 14

ORP Range: -1400 to +1400mV

Calibrations/standardization: The automatic buffer recognition uses stored buffer values and their temperature curves for the most common buffer standards available worldwide. The transmitter also performs a stabilization check on the sensor in each buffer.

A manual two-point calibration is made by immersing the sensor in two different buffer solutions and entering the pH values. The microprocessor automatically calculates the slope which is used for self-diagnostics. An error message will be displayed if the pH sensor is faulty. This slope can be read on the display and/or manually adjusted if desired.

An on-line one-point process standardization is accomplished by entering the pH or ORP value of a grab sample.

Preamplifier Location: A preamplifier must be used to convert the high impedance pH electrode signal to a low impedance signal for transmitter use. The integral preamplifier of the 5081-P may be used when the sensor to transmitter distance is less than 15 ft (4.5 m). Locate the preamplifier in the sensor or junction box for longer distances.

Automatic Temperature Compensation: External 3 or 4 wire Pt 100 RTD or Pt 1000 RTD located in the sensor, compensates the pH reading for temperature fluctuations. Compensation covers the range -15 to 130°C (5 to 270°F). Manual temperature compensation is also selectable.

Accuracy: ±1 mV @ 25°C ±0.01 pH

Repeatability: ±1 mV @ 25°C ±0.01 pH

Stability: 0.25% / year @ 25°C

Diagnostics: The internal diagnostics can detect:

Calibration Error	Low Temperature Error
High Temperature Error	Sensor Failure
Line Failure	CPU Failure
ROM Failure	Input Warning
Glass Failure	Glass Warning
Reference Failure	Reference Warning

Once one of the above is diagnosed, the LCD will display a message describing the failure/default detected.

Digital Communications:

HART (pH): PV assigned to pH. SV, TV, and 4V assignable to pH, temperature, mV, glass impedance, reference impedance, or RTD resistance.

HART (ORP): PV assigned to ORP. SV, TV, and 4V assignable to ORP, temperature, reference impedance, or RTD resistance.

Fieldbus (pH): Four AI blocks assigned to pH, temperature, reference impedance, and glass impedance.

Fieldbus (ORP): Three AI blocks assigned to ORP, temperature, and reference impedance.

Fieldbus (pH and ORP): Execution time 75 msec. One PID block; execution time 150 msec. Device type 4085. Device revision 1. Certified to ITK 4.5.

SENSOR COMPATIBILITY CHART

pH/ORP SENSOR	DIAGNOSTIC CAPABILITY
320HP-58	Glass only
328A	Glass only
370	Glass only
371	Glass only
372	Glass only
381 pHE-31-41-52	Glass only
381+	Glass and Reference
385+	Glass and Reference
389-02-54 / 389VP-54	Glass only
396-54-62 / 396VP	Glass only
396P-55 / 396PVP-55	Glass and Reference
396R / 396RVP-54	Glass and Reference
397-54-62	Glass only
398-54-62 / 398VP-54	Glass only
398R-54-62 / 398RVP-54	Glass only
399-09-62 / 399VP-09	Glass only
Hx338	Glass only
Hx348	Glass only
TF396	none

5081-P pH/ORP TRANSMITTER

HAZARDOUS LOCATION APPROVAL

Intrinsic Safety (with appropriate safety barrier):

Class I, II, III, Div. 1
Groups A-G
T4 Tamb = 70°C

Exia Entity
Class I, Groups A-D
Class II, Groups E-G
Class III
T4 Tamb = 70°C

ATEX CE 0600 II 1 G
Baseefa02ATEX1284
EEx ia IIC T4
Tamb = -20°C to +65°C

Non-Incendive:

Class I, Div. 2, Groups A-D
Dust Ignition Proof
Class II & III, Div. 1, Groups E-G
Type 4X Enclosure

Class I, Div. 2, Groups A-D
Suitable for
Class II, Div. 2, Groups E-G
T4 Tamb = 70°C

Explosion-Proof:

Class I, Div. 1, Groups B-D
Class II, Div. 1, Groups E-G
Class III, Div. 1

Class I, Groups B-D
Class II, Groups E-G
Class III
Tamb = 65°C max

TRANSMITTER DISPLAY DURING CALIBRATION AND PROGRAMMING (FIGURE 1)

1. Continuous display of pH, ORP, conductivity, oxygen, chlorine, or ozone reading.
2. Units: pH, mV, µS/cm, mS/cm, ppm, ppb, or % saturation.
3. Current menu appears here.
4. Submenus, prompts, and diagnostic readings appear hear.
5. Commands available in each submenu or at each prompt appear here.
6. Hold appears when the transmitter is in hold.
7. Fault appears when the transmitter detects a sensor or instrument fault.
8. © flashes during digital communication.

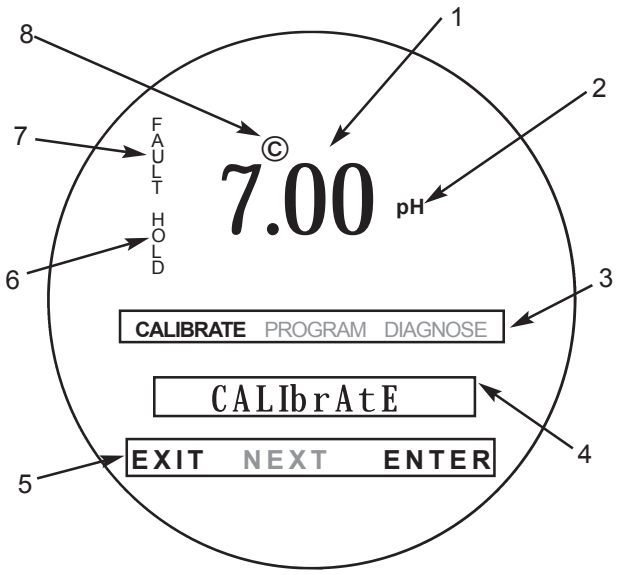

FIGURE 1. TRANSMITTER DISPLAY DURING CALIBRATION AND PROGRAMMING

The program display screen allows access to calibration and programming menus.

INFRARED REMOTE CONTROLLER (FIGURE 2)

1. Pressing a menu key allows the user access to calibrate, program, or diagnostic menus.
2. Press ENTER to store data and settings. Press NEXT to move from one submenu to the next. Press EXIT to leave without storing changes.
3. Use the editing keys to scroll through lists of allowed settings or to change a numerical setting to the desired value.
4. Pressing HOLD puts the transmitter in hold and sends the output current to a pre-programmed value. Pressing RESET causes the transmitter to abandon the present operation and return to the main display.

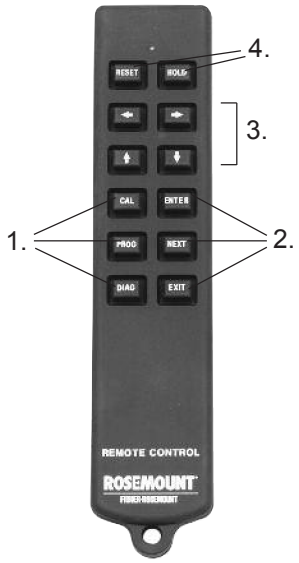

FIGURE 2. INFRARED REMOTE CONTROLLER

HART COMMUNICATION (FIGURE 3)

Figure 3 shows how HART® communication can be used with the 5081-HT. Use HART to configure and read process variables using the 375 HART Communicator, a personal computer, or any other hosts that support HART communication protocol. HART allows communication through to AMS.

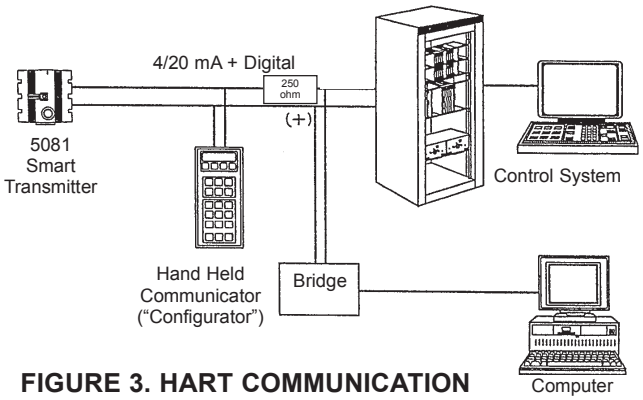

FIGURE 3. HART COMMUNICATION

FOUNDATION™ FIELDBUS (FIGURE 4)

Figure 4 shows a 5081-A-FF being used to measure and control pH and chlorine levels in drinking water. The figure also shows three ways in which Fieldbus communication can be used to read process variables and configure the transmitter.

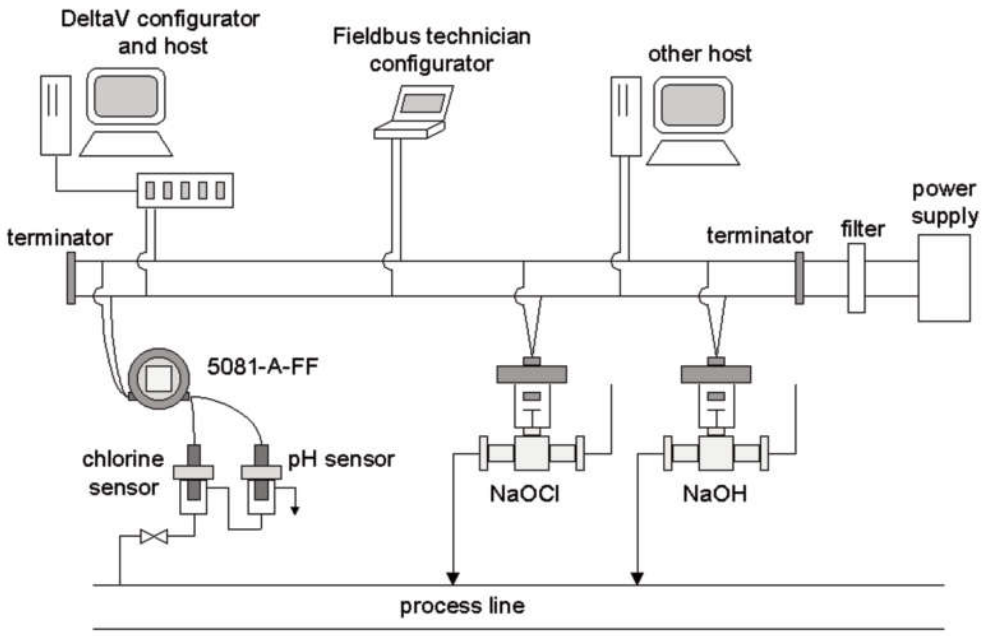

FIGURE 4. CONFIGURING 5081-A TRANSMITTER WITH FOUNDATION FIELDBUS

ASSET MANAGEMENT SOLUTIONS (AMS) (FIGURES 5, 6, and 7)

Rosemount Analytical AMS windows provide access to all transmitter measurement and configuration variables. The user can read raw data, final data, and program settings and can reconfigure the transmitter from anywhere in the plant. Figures 5 and 6 show two of the many configuration and measurement screens available using HART AMS. Figure 7 shows a configuration screen available through AMS Inside using FOUNDATION Fieldbus.

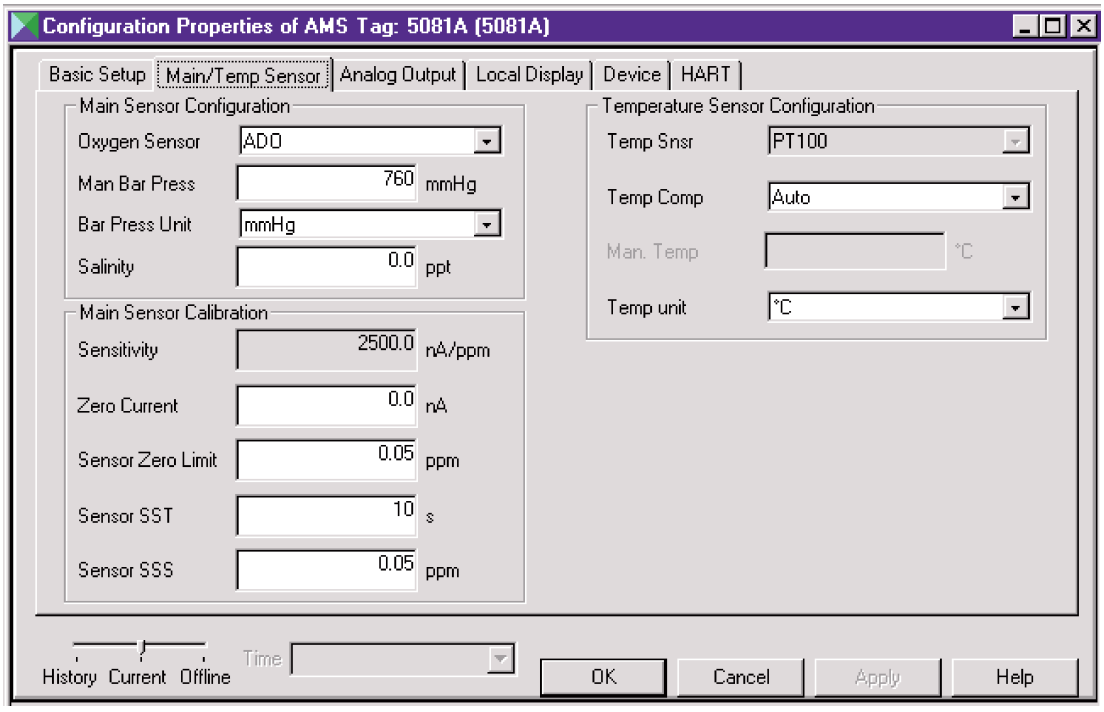

FIGURE 5. AMS CONFIGURATION SCREEN USING HART

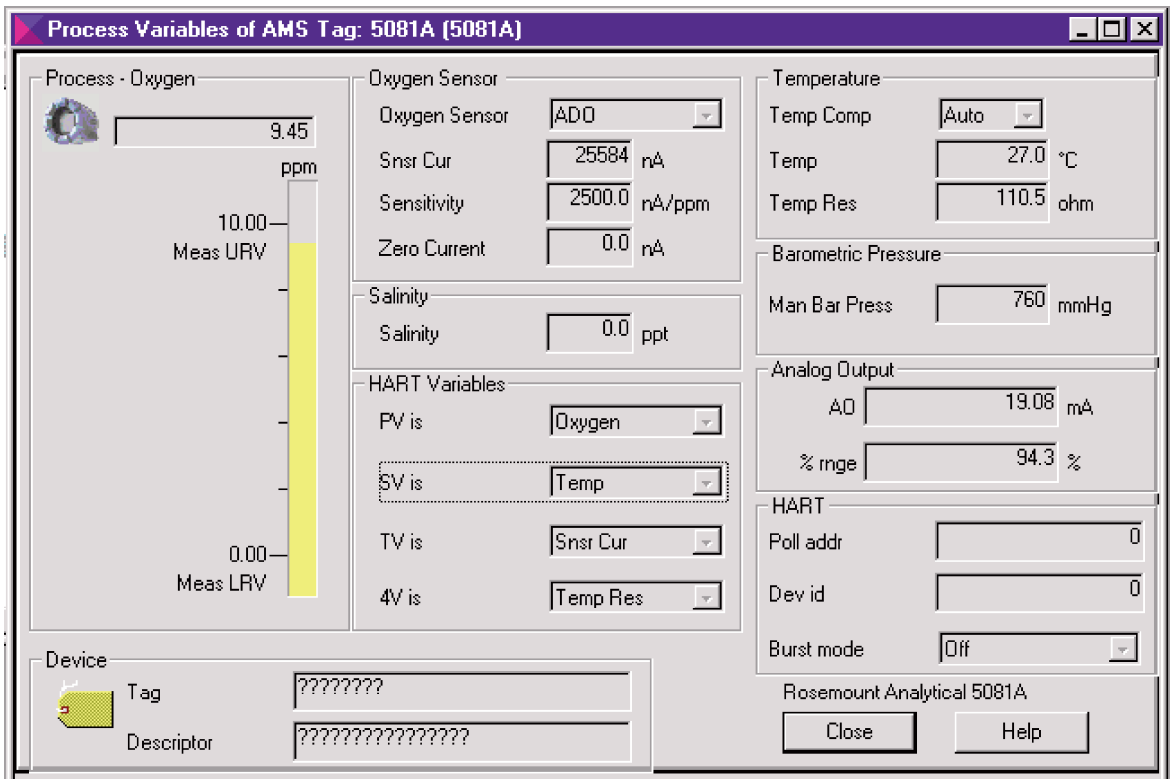

FIGURE 6. AMS MEASUREMENT SCREEN USING HART

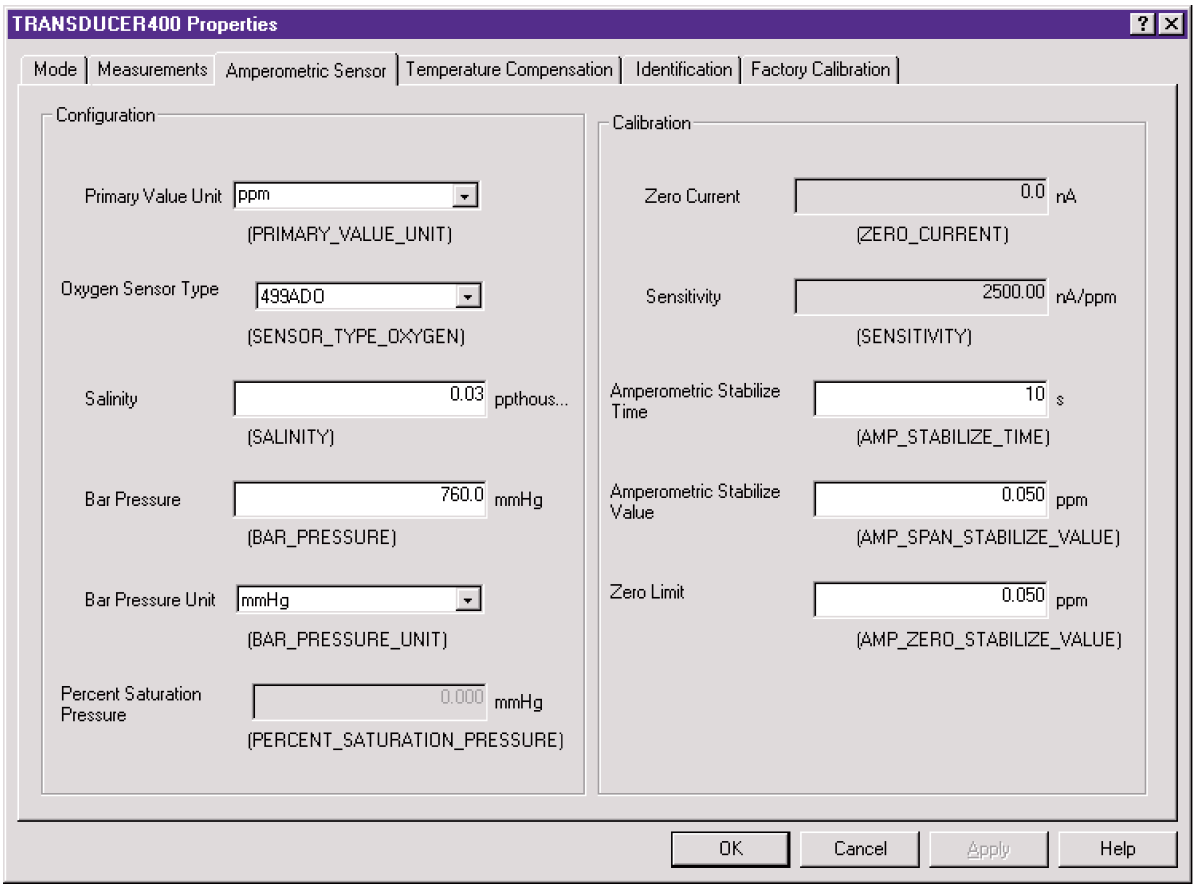

FIGURE 7. AMS INSIDE CONFIGURATION SCREEN USING FOUNDATION FIELDBUS

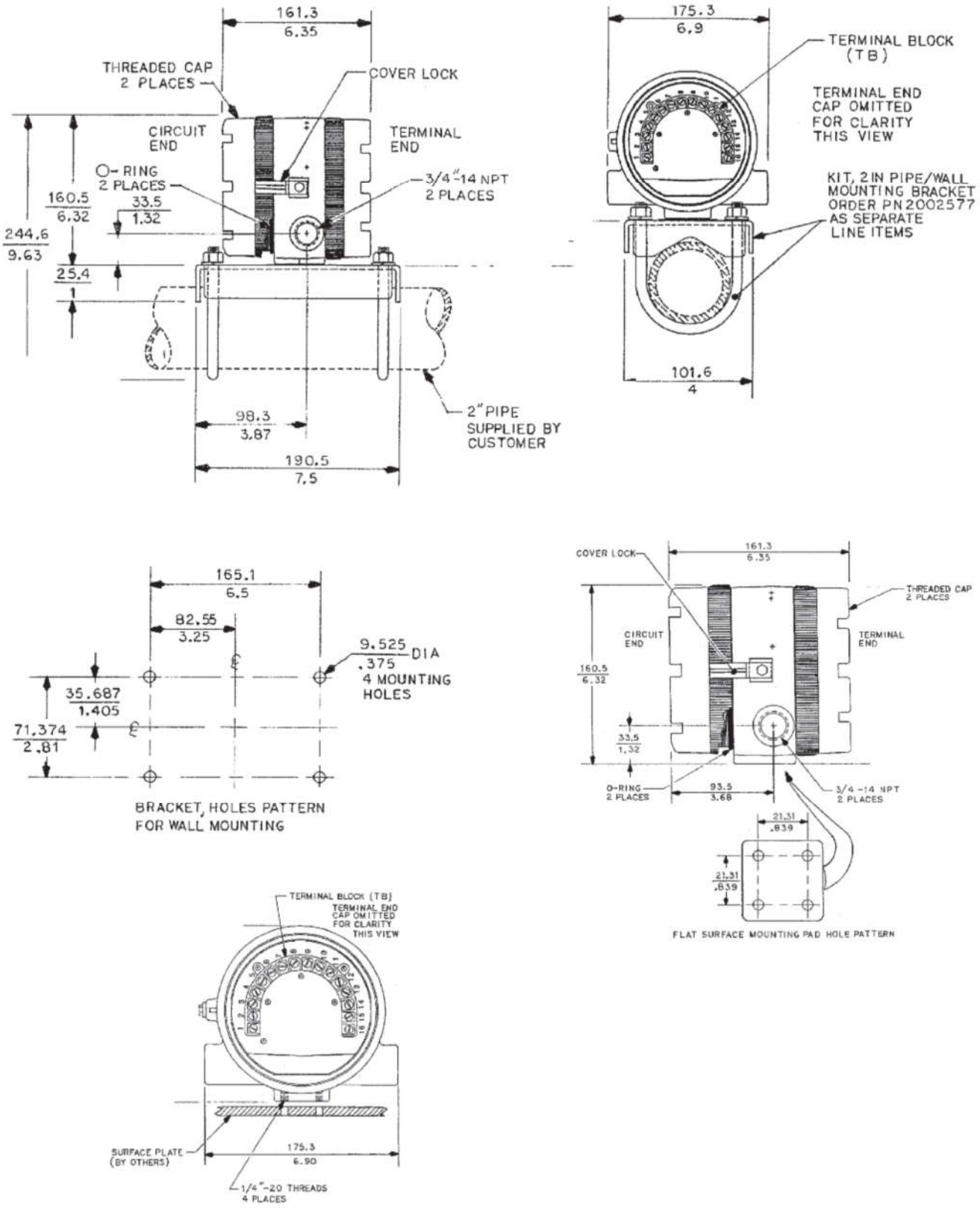

FIGURE 8. 5081 MOUNTING AND DIMENSIONAL DRAWINGS

ORDERING INFORMATION

The **5081 Two-Wire Transmitter** is intended for the determination of pH/ORP, conductivity (both contacting and toroidal), and for measurements using membrane-covered amperometric sensors (oxygen, ozone, and chlorine). For free chlorine measurements, which often require continuous pH correction, a second input for a pH sensor is available. A hand-held infrared remote controller is required for local configuration and calibration of the transmitter.

5081	SMART TWO-WIRE MICROPROCESSOR TRANSMITTER
CODE	**REQUIRED SELECTION**
P	pH/ORP
C	Contacting conductivity
T	Toroidal conductivity
A	Amperometric (oxygen, ozone, and chlorine)

CODE	REQUIRED SELECTION
HT	Analog 4-20 mA output with superimposed HART digital signal
FF	Foundation Fieldbus digital output
FI	Foundation Fieldbus digital output with FISCO

CODE	REQUIRED SELECTION
20	Infrared remote controller included
21	Infrared remote controller not included

CODE	AGENCY APPROVALS
60	No approval
67	FM approved intrinsically safe, non-incendive (when used with appropriate sensor and safety barrier), and explosion-proof
69	CSA approved intrinsically safe, non-incendive (when used with appropriate sensor and safety barrier), and explosion-proof
73	ATEX approved intrinsically safe (when used with appropriate sensor and safety barrier)

5081-P-HT-20-67 EXAMPLE

ACCESSORIES

MODEL/PN	DESCRIPTION
515	DC loop power supply (see product data sheet 71-515)
230A	Alarm module (see product data sheet 71-230A)
24479-00	Infrared remote controller (required, one controller can operate any 5081 transmitter)
23820-00	2-in. pipe mounting kit
9241178-00	Stainless steel tag, specify marking
475	To order HART 475 Communicator, call Rosemount Measurement at (800) 999-9307
AMS software	To order AMS software, call Rosemount Measurement at (800) 999-9307

Emerson Process Management

2400 Barranca Parkway
Irvine, CA 92606 USA
Tel: (949) 757-8500
Fax: (949) 474-7250

rosemountanalytical.com

© Rosemount Analytical Inc. 2015

©2015 Rosemount Analytical, Inc. All rights reserved.

The Emerson logo is a trademark and service mark of Emerson Electric Co. Brand name is a mark of one of the Emerson Process Management family of companies. All other marks are the property of their respective owners.

The contents of this publication are presented for information purposes only, and while effort has been made to ensure their accuracy, they are not to be construed as warranties or guarantees, express or implied, regarding the products or services described herein or their use or applicability. All sales are governed by our terms and conditions, which are available on request. We reserve the right to modify or improve the designs or specifications of our products at any time without notice.

ROSEMOUNT® Analytical

EMERSON™ Process Management

Product Data Sheet
00813-0100-3900, Rev AC
August 2021

Rosemount™ 3900/3900VP

General Purpose pH/ORP Sensors



High performance for your process pH/ORP needs

The Rosemount 3900 and 3900VP pH/ORP combination sensors are used for reliable pH or oxidation reduction potential measurements of aqueous solutions in pipelines, open tanks, or ponds. Their robust designs allow the Rosemount 3900 and 3900VP sensors to be used in a wide range of applications.

Overview

A robust sensor design



- Extended sensor life and protection against poisoning ions using a double junction reference.
- Enhanced performance and increased life with cracking resistant glass.
- Maximum chemical resistance provided by a rugged polyphenylene sulfide body.
- Operates in sub-zero temperatures down to 14 °F (-10 °C).
- Built-ins solution ground for advanced diagnostics.

Versatile installation options

- The sensor body features a one-piece construction with both front facing and rear facing process threads.
- ¾-in. and 1-in. male national pipe thread (MNPT) process connections to meet a variety of application installation requirements.
- Variopol (VP8) cable connection option, for quick cable-to-sensor release, eliminates cable twisting.

SMART preamplifier

- Automatic recognition of pH sensors by Rosemount transmitters: 1066, 1057, 1056, and 56.
- pH calibration data is stored, which allows sensors to be calibrated in advance for "plug and play" installations in the field.

Ordering information



The Rosemount 3900 and 3900VP General Purpose pH/ORP Sensors feature a chemically resistant Ryton® plastic body, along with a built-in solution ground for advanced diagnostics and a Pt-100 resistance temperature device (RTD) for temperature compensation. These sensors are available with either an integral cable connection (Rosemount 3900) or Variopol (VP8) connector (Rosemount 3900VP). Variopol cables are sold separately (see Accessories).

Contents

Overview 2
Ordering information 2
Accessories 5
Specifications 6
Rosemount pH/ORP sensor(s) product certifications 7
Dimensional and installation drawings 12

Rosemount 3900 ordering information

CONFIGURE > VIEW PRODUCT >

Note
The Rosemount 3900 pH/ORP Sensor is housed in a Ryton® plastic body with built-in solution ground for advanced diagnostics. Pt-100 is offered for a temperature compensator. The sensor is available with an integral cable. You can mount the sensor using a process connector, both ordered separately. You can also order junction box kits with preamplifiers separately if the transmitter does not have an integral preamplifier.

Model

Code	Description
3900	General Purpose pH/ORP Sensor

Preamplifier options

Code	Description
01	SMART preamplifier, 32-ft. (10 m) cable(1)
02	No preamplifier, 15-ft. (5 m) cable)
04	SMART preamplifier, 50-ft. (15 m) cable(1)
05	SMART preamplifier, 66-ft. (20 m) cable(1)
06	SMART preamplifier, 100-ft. (30 m) cable(1)
07	No preamplifier, 4-ft. (1 m) cable
08	No preamplifier, 10-ft. (3 m) cable

(1) *Standard preamplifier if used with oxidation reduction potential (ORP).*

Measuring code

Code	Description
10	General purpose low resistivity (GPLR) pH glass (0-14 pH)
12	Platinum oxidation reduction potential (ORP)

Calibration certificates - optional level

Code	Description
CC	Certificate of Calibration (no test data given)
LC	Loop Calibration Certificate (sensor and transmitter calibrated together, with test data)
EC	Electronic Calibration Certificate (sensor calibrated against factory instrument, with test data)

Rosemount 3900VP ordering information

CONFIGURE > VIEW PRODUCT >

Model

Code	Description
3900VP	General Purpose pH/ORP Sensor with Variopol connector

Preamplifier options

Code	Description
01	SMART preamplifier(1)
02	No preamplifier

(1) *Standard preamplifier if used with oxidation reduction potential (ORP).*

Measuring code

Code	Description
10	General purpose low resistivity (GPLR) pH glass (0-14 pH)
12	Platinum oxidation reduction potential (ORP)

Calibration certificates - optional level

Code	Description
CC	Certificate of Calibration (no test data given)
LC	Loop Calibration Certificate (sensor and transmitter calibrated together, with test data)
EC	Electronic Calibration Certificate (sensor calibrated against factory instrument, with test data)

Accessories

Part number	Description
11275-01	Handrail mounting assembly
12707-00	Jet spray cleaner
2002011	CPVC flow-through tee, 1½-in. national pipe thread (NPT) process connection
23242-02	Mounting adapter, 1½-in. insertion, 1 x ¾ in.
23555-00	Junction box, Rosemount 54/5081/1055/Xmt compatible preamplifier
24091-00	Cell, low flow, ¼-in. inlet and outlet
33894-00	Adapter, 1-in. NPT low flow cell
24281-00	15-ft. (4.6 m) VP8 cable
24281-01	25-ft. (7.6 m) VP8 cable
24281-02	2.5-ft. (0.8 m) VP8 cable
24281-03	50-ft. (15.2 m) VP8 cable
24281-04	100-ft. (30.5 m) VP8 cable
24281-05	4-ft. (1.2 m) VP8 cable
24281-06	10-ft. (3 m) VP8 cable
24281-07	20-ft. (6.1 m) VP8 cable
24281-08	30-ft. (9.1 m) VP8 cable
9200273	Extension cable, 11-conduit, shielded, unprepped, per foot
9210012	Buffer solution, pH 4.01, 16 oz. (473 ml)
9210013	Buffer solution, pH 6.86, 16 oz. (473 ml)
9210014	Buffer solution, pH 9.18, 16 oz. (473 ml)
00390-7101-0001	Low flow panel
R508-8OZ	Oxidation reduction potential (ORP) calibration standard 460 ± 10 mV

Specifications

Table 1: Percent Linearity over pH Range

pH range	Linearity
0-7	97%
1-7	98%
4-7	98%
7-10	99%
7-12	97%
7-13	96%
7-14	95%

Table 2: Rosemount 3900/3900VP pH/ORP Sensor Specifications

Measurement range	
pH	0 to 14
Oxidation reduction potential (ORP)	-1500 to +1500 mV
Operating temperature	
14 to 212 °F (-10 to 100 °C), automatic temperature compensation from 14 to 212 °F (-10 to 100 °C)	
Maximum pressure	
100 psig (790 kPa) at 212 °F (100 °C) CRN rating: 60 psig up to 212 °F (100 °C)	
Materials of construction	
Sensor body	Ryton®: polyphenylene sulfide (PPS)
O-ring	EPDM
pH electrode	Glass
ORP electrode	Glass, platinum
Solution ground	Stainless steel
Reference junction	PTFE
Conductivity	
Responds to changes in pH at a minimum conductivity of 0.1 µS/cm when used with the low flow panel. The sample flow rate must be controlled to 2 gallons per hour (7.61 liters per hour).	
Process connection	
Front facing	¾-in. and 1-in. male national pipe thread (MNPT)
Rear facing	1-in. MNPT
Temperature compensation	
Pt-100	

Table 2: Rosemount 3900/3900VP pH/ORP Sensor Specifications *(continued)*

Cable	
3900	Various cable lengths (see Preamplifier options) with integral preamplifier; 15-ft. (4.6 m) and less without preamplifier
3900VP	Use 24281-XX, 2.5-ft. (0.8 m) to 100 ft. (30.5 m). See Accessories.
Weight/shipping weight	
1 lb./2 lb. (0.45 kg/0.9 kg)	

Rosemount pH/ORP sensor(s) product certifications

Rev 0.5

European directive information

A copy of the EU Declaration of Conformity can be found at the end of the Quick Start Guide. The most recent revision of the EU Declaration of Conformity can be found at Emerson.com/Rosemount.

Ordinary location certification

As standard, the transmitter has been examined and tested to determine that the design meets the basic electrical, mechanical, and fire protection requirements by a nationally recognized test laboratory (NRTL) as accredited by the Federal Occupational Safety and Health Administration (OSHA).

Installing equipment in North America

The US National Electrical Code® (NEC) and the Canadian Electrical Code (CEC) permit the use of Division marked equipment in Zones and Zone marked equipment in Divisions. The markings must be suitable for the area classification, gas, and temperature class. This information is clearly defined in the respective codes.

USA

FM Intrinsic Safety

Certificate	FM17US0198X
Standards	FM Class 3600:1998, FM Class 3610:2010, FM Class 3611: 2004, FM Class 3810: 2005
Markings	IS/I,II,III/1/ABCDEFG/T6 Ta = –20 °C to 60 °C I/0/AEx ia IIC/T6 Ta = –20 °C to 60 °C NI/I/2/ABCD/T6 Ta = –20 °C to 60 °C S/II,III/2/EFG/T6 Ta = –20 °C to 60 °C

Specific Conditions for Safe Use (X):

1. Sensors with Model 1700702 preamplifier:
    a. Model 385+-a-b-c. Triple junction pH/ORP sensor

b. Model 389-a-b-c-d-e. pH/ORP sensor
c. Model 389VP-a-b-c-d. pH/ORP sensor
d. Model 396VP-a-b-c-d. Submersion/insertion pH/ORP sensor
e. Model 396P-a-b-c-d-e. Submersion/insertion pH/ORP sensor
f. Model 396PVP-a-b-c-d-e. Submersion/insertion pH/ORP sensor
g. Model 396RVP-a-b-c-d-e. Retraction/submersion/insertion pH/ORP sensor
h. Model 398RVP-a-b-c-d-e-f. pH/ORP sensor
i. Model 3200HP-00. High purity water pH sensor
j. Model 3300HTVP-a-b-c-d. High performance pH and ORP sensor
k. Model 3400HTVP-a-b-c-d-e. High performance pH and ORP sensor
l. 3500P-a-b-c-d-e-f. High performance pH and ORP sensor
m. 3500VP-a-b-c-d-e-f. High performance pH and ORP sensor
n. Model 3900-a-b-c. General purpose pH/ORP sensor
o. Model 3900VP-a-b. General purpose pH/ORP sensor

The polymeric surface of all the apparatus listed above may store electrostatic charge and become a source of ignition. Clean surface should only be done with a damp cloth.

2. Sensors without Model 1700702 preamplifier (simple apparatus):
   a. Model 385-a-b-c-d-e. Retractable pH/ORP sensor
   b. Model 385+-a-b-c Triple junction pH/ORP sensor
   c. Model 389-a-b-c-d-e. pH/ORP sensor
   d. Model 389VP-a-b-c. pH/ORP sensor
   e. Model 396-a-b-c. Submersion/insertion pH sensor
   f. Model 396VP-a-b. Submersion/insertion pH sensor
   g. Model 396P-a-b-c-d-e. Submersion/insertion pH/ORP sensor
   h. Model 396PVP-a-b-c-d. Submersion/insertion pH/ORP sensor
   i. Model 396R-a-b-c-d-e. Retraction/submersion/insertion pH/ORP sensor
   j. Model 396RVP-a-b-c-d. Retraction/submersion/insertion pH/ORP sensor
   k. Model 397-a-b-c-d-e. pH sensor
   l. Model 398-a-b-c-d-e. pH/ORP sensor
   m. Model 398VP-a-b-c. pH/ORP sensor
   n. Model 398R-a-b-c-d-e-f. pH/ORP sensor
   o. Model 398RVP-a-b-c-d-e-f. pH/ORP sensor
   p. Model 3200HP-00. High purity water pH sensor
   q. Model 3300HT-a-b-c-d. High performance pH and ORP sensor
   r. Model 3300HTVP-a-b-c-d. High performance pH and ORP sensor
   s. Model 3400HT-a-b-c-d-e-f. High performance pH and ORP sensor
   t. Model 3400HTVP-a-b-c-d-e-f. High performance pH and ORP sensor
   u. Model 3500P-a-b-c-d-e-f. High performance pH and ORP sensor

v. Model 3500VP-a-b-c-d-e-f. High performance pH and ORP sensor

w. Model 3800-a. Autoclaveable and steam sterilizable pH sensors

x. Model 3800VP-a. Autoclaveable and steam sterilizable pH sensors

y. Model 3900-a-b-c. General purpose pH/ORP sensor

z. Model 3900VP-a-b. General purpose pH/ORP sensor

The polymeric surface of all the apparatus listed above may store electrostatic charge and become a source of ignition. Clean surface should only be done with a damp cloth.

CSA Intrinsic Safety

Certificate 70164066

Standards C22.2 No 0-10, C22.2 No 0.4-M2004, C22.2 No 94-M1991, C22.2 No 142 – M1987, C22.2 No 157-M1992, CAN/CSA E60079-0:07, CAN/CSA E60079-11:02, UL 50-11th Ed, UL 508-17th Ed, UL 913-7th Ed, UL 60079-0: 2005, UL 60079-11: 2002

Markings Preamplifier assembly:
Class I, Division 1, Groups ABCD; Class II, Division 1, Groups EFG; Class III; Class I, Division 2, Groups ABCD; ambient temperature rating –20 °C to +60 °C; Ex ia IIC; T6: Class I, Zone 0, AEx ia IIC ; T6

Sensor apparatus with preamplifier:
Class I, Division 1, Groups ABCD; Class II, Division 1, Groups EFG; Class III; Class I, Division 2, Groups ABCD; ambient temperature rating –20 °C to +60 °C; Ex ia IIC; T6: Class I, Zone 0, AEx ia IIC ; T6

Sensor apparatus:
Class I, Division 1, Groups ABCD; Class II, Division 1, Groups EFG; Class III; Class I, Division 2, Groups ABCD; Ex ia IIC; T6; ambient temperature rating –20 °C to +60 °C: (simple apparatus)

Canada

CSA Intrinsic Safety

Certificate 70164066

Standards C22.2 No 0-10, C22.2 No 0.4-M2004, C22.2 No 94-M1991, C22.2 No 142 – M1987, C22.2 No 157-M1992, CAN/CSA E60079-0:07, CAN/CSA E60079-11:02, UL 50-11th Ed, UL 508-17th Ed, UL 913-7th Ed, UL 60079-0: 2005, UL 60079-11: 2002

Markings Preamplifier assembly:
Class I, Division 1, Groups ABCD; Class II, Division 1, Groups EFG; Class III; Class I, Division 2, Groups ABCD; ambient temperature rating –20 °C to +60 °C; Ex ia IIC; T6: Class I, Zone 0, AEx ia IIC ; T6

Sensor apparatus with preamplifier:
Class I, Division 1, Groups ABCD; Class II, Division 1, Groups EFG; Class III; Class I, Division 2, Groups ABCD; ambient temperature rating –20 °C to +60 °C; Ex ia IIC; T6: Class I, Zone 0, AEx ia IIC ; T6

Sensor apparatus:
Class I, Division 1, Groups ABCD; Class II, Division 1, Groups EFG; Class III; Class I, Division 2, Groups ABCD; Ex ia IIC; T6; ambient temperature rating –20 °C to +60 °C: (simple apparatus)

Europe

ATEX Intrinsic Safety

Certificate	Baseefa10ATEX0156
Standards	EN 60079-0: 2012+A11: 2013, EN 60079-11: 2012
Markings	pH/ORP sensors with no preamplifier fitted Ⓔx II 1 G Ex ia IIC T4 Ga (–20 °C to +60 °C) pH sensors with integral smart preamplifier fitted Ⓔx II 1 G Ex ia IIC T4 Ga (–20 °C to +60 °C) ORP sensors with integral standard preamplifier fitted Ⓔx II 1 G Ex ia IIC T4 Ga (–20 °C to +80 °C) Ex ia IIC T5 Ga (–20 °C to +40 °C) pH sensors with integral standard preamplifier fitted Ⓔx II 1 G Ex ia IIC T4 Ga (–20 °C to +80 °C) Ex ia IIC T5 Ga (–20 °C to +40 °C)

Specific Conditions for Safe Use (X):

1. All pH/ORP sensor models with a plastic enclosure or exposed plastic parts may provide an electrostatic ignition hazard and must only be cleaned with a damp cloth to avoid the danger of ignition due to build-up of electrostatic charge.
2. All pH/ORP sensor models with a metallic enclosure may provide a risk of ignition by impact or friction. Care should be taken during installation to protect the sensor from the risk.
3. External connections to the sensor must be suitably terminated and provide a degree of protection of at least IP20.
4. All pH/ORP sensor models are intended to be in contact with the process fluid and may not meet the 500V r.m.s. test to earth. This must be taken into consideration at installation.

International

IECEx Intrinsic Safety

Certificate	IECEx BAS 10.0083X
Standards	IEC 60079-0: 2011, IEC 60079-11: 2011
Markings	pH/ORP sensors with no preamplifier fitted Ex ia IIC T4 Ga (–20 °C to +60 °C) pH sensors with integral smart preamplifier fitted Ex ia IIC T4 Ga (–20 °C to +60 °C) ORP sensors with integral standard preamplifier fitted Ex ia IIC T4 Ga (–20 °C to +80 °C) Ex ia IIC T5 Ga (–20 °C to +40 °C) pH sensors with integral standard preamplifier fitted Ex ia IIC T4 Ga (–20 °C to +80 °C) Ex ia IIC T5 Ga (–20 °C to +40 °C)

Specific Conditions for Safe Use (X):

1. All pH/ORP sensor models with a plastic enclosure or exposed plastic parts may provide an electrostatic ignition hazard and must only be cleaned with a damp cloth to avoid the danger of ignition due to build-up of electrostatic charge.

2. All pH/ORP sensor models with a metallic enclosure may provide a risk of ignition by impact or friction. Care should be taken during installation to protect the sensor from the risk.
3. External connections to the sensor must be suitably terminated and provide a degree of protection of at least IP20.
4. All pH/ORP sensor models are intended to be in contact with the process fluid and may not meet the 500V r.m.s. test to earth. This must be taken into consideration at installation.

China

Nepsi Intrinsic Safety

Certificate	GYB19.1035X
Standards	GB 3836.1-2010, GB 3836.4-2010, GB 3836.20-2010
Markings	Ex ia II C T4 Ga (–20 °C to +60 °C)

Specific Conditions for Safe Use (X):

1. It is strictly forbidden to rub the plastic shell parts of the product to prevent the risk of static ignition.
2. When the product shell contains light metals, it should be prevented in a zone 0 environment.

Technical Regulations Customs Union (EAC)

EAC Intrinsic Safety

Certificate	TC RU C-US .MIO62. B.06011
Markings	pH/ORP sensors with no preamplifier fitted Ex ia IIC T4 Ga (–20 °C to +60 °C) pH sensors with integral smart preamplifier fitted Ex ia IIC T4 Ga (–20 °C to +60 °C) ORP sensors with integral standard preamplifier fitted Ex ia IIC T4 Ga (–20 °C to +80 °C) Ex ia IIC T5 Ga (–20 °C to +40 °C) pH sensors with integral standard preamplifier fitted Ex ia IIC T4 Ga (–20 °C to +80 °C) Ex ia IIC T5 Ga (–20 °C to +40 °C)

Specific Condition for Safe Use (X):

See certificate for special conditions.

Dimensional and installation drawings

Figure 1: Proper Sensor Installation Orientation

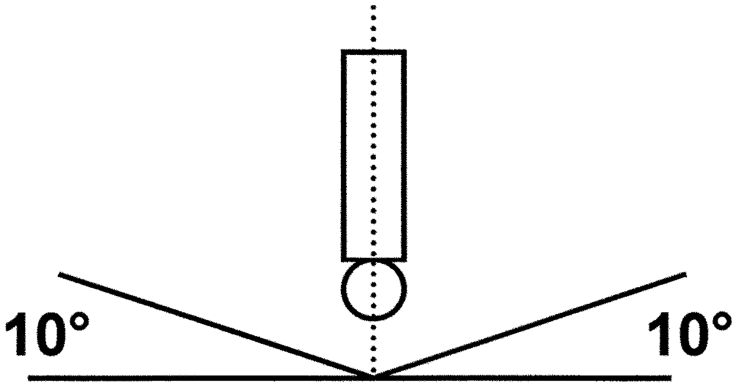

Install sensor within 80 degrees of vertical.

Figure 2: Rosemount 3900 with Integral Cable Connection

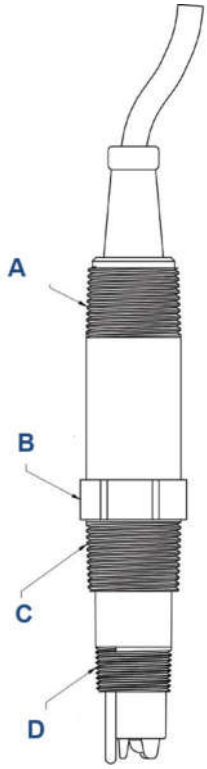

A. 1-in. male national pipe thread (MNPT)
B. Wrench flats, 1.30 in. across
C. 1-in. MNPT
D. ¾-in. MNPT

Figure 3: Rosemount 3900VP with Variopol Cable Connection

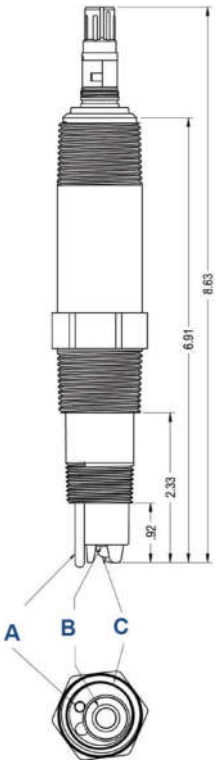

A. Temperature compensation solution ground
B. Reference junction
C. pH electrode

Table 3: Horizontal Pipe Tee (PN 2002011) Pressure/Temperature Ratings

psig (kpa)	°F (°C)
150 (1136)	150 (65)
128 (984)	160 (71)
102 (805)	170 (77)
80 (653)	180 (82)
57 (494)	200 (93)
48 (432)	210 (99)

Figure 4: Typical Flow-through Insertion Installation using PN 2002011 Pipe Tee

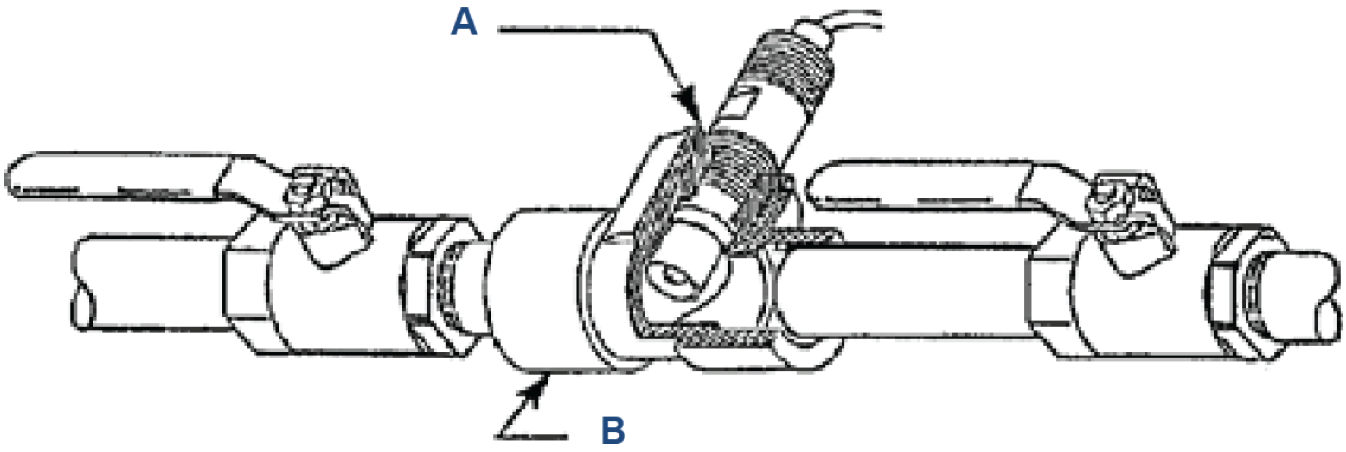

A. 1½-in. x 1-in. reducing bushing
B. 1½-in. pipe tee PN 2002011

Table 4: Low Flow Cell Specifications PN 24091-00/24091-02

Wetted materials	
Body and nut	Polyester/polycarbonate
Fittings	316 stainless steel
Seals	Silicone
Flow cell ratings	
Temperature	32 to 158 °F (0 to 70 °C)
Maximum pressure	90 psig (721 kPa)
Flow rate	2 to 5 gallons per hour (7.6 to 18.9 liters per hour)
Sensor threaded connection	
24091-00	1-in. national pipe thread (NPT) adapter
24091-02	¾-in. NPT adapter

Figure 5: Low Flow Cell (PN 24091-00)

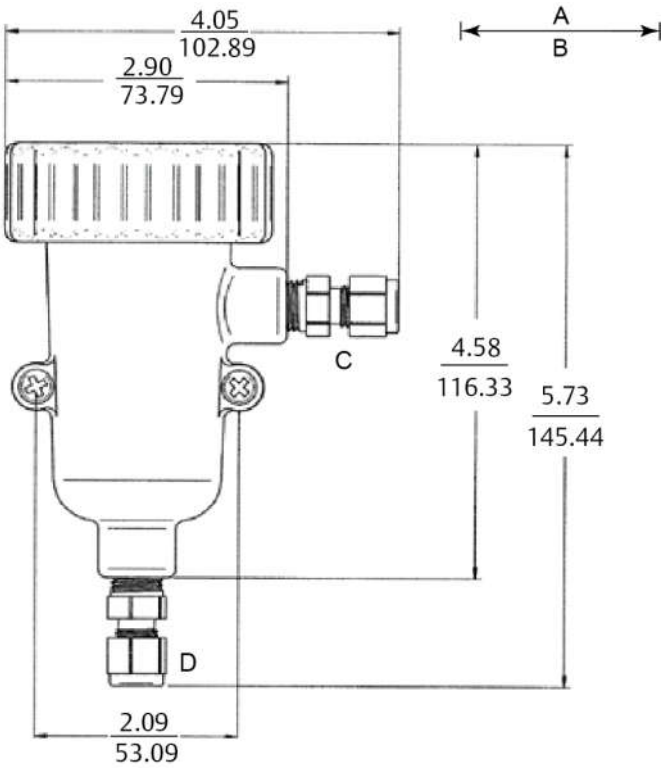

A. Inches
B. Millimeters
C. Outlet
D. Inlet

Figure 6: Flow-through Tee (2-in.) (PN 914240-XX)

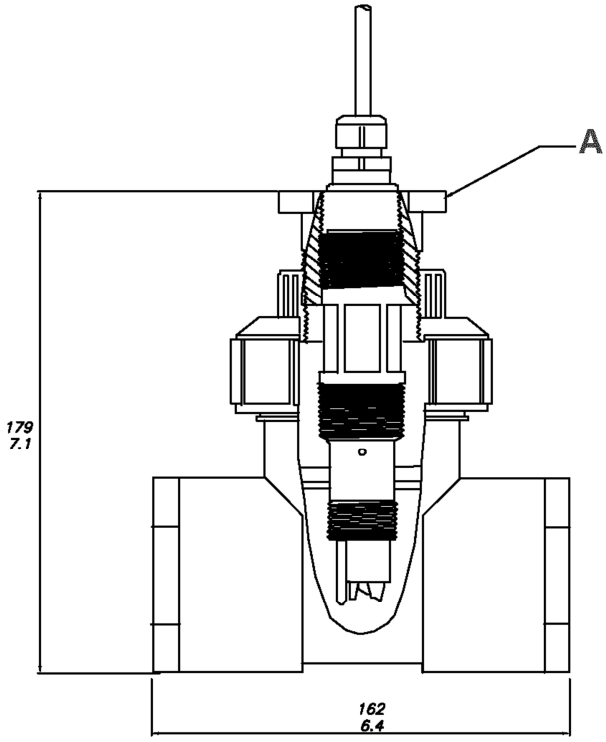

A. Adapter

The following flow-through tees are available for the Rosemount 3900/3900VP.

- 915240-03
- 915240-04
- 915240-05

For a new installation, use the appropriate tee above and add the S10283-LQD adapter.

When replacing an existing Rosemount 399 with a Rosemount 3900 sensor, add the S10283-LQD adapter to convert the tee to accept the Rosemount 3900 sensor.

Figure 7: Jet Spray Cleaner

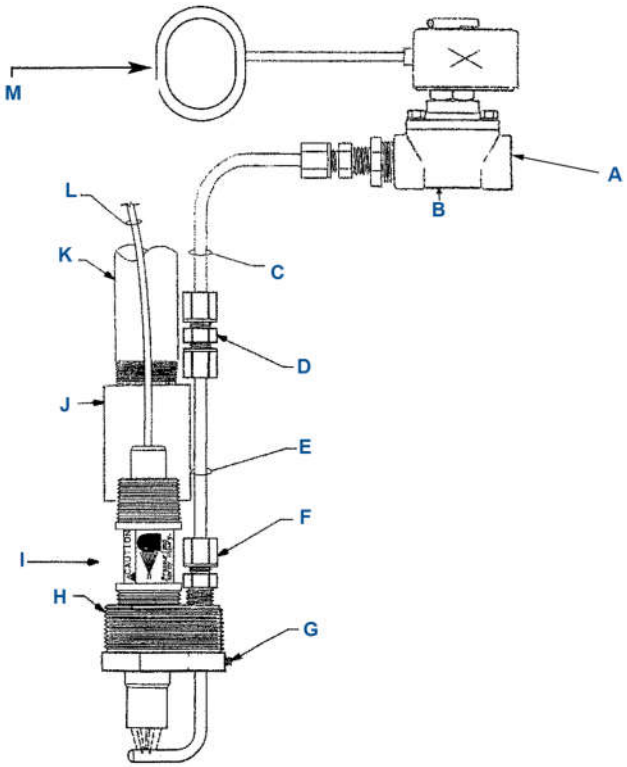

A. Cleaning solution by others
B. Solenoid valve or manual valve (supplied by others)
C. Corrosion resistant tubing (supplied by others)
D. Polypropylene ¼-in. (6.4 mm) compression fitting
E. ¼-in. (6.4 mm) 316 stainless steel
F. ¼-in. (6.4 mm) polypropylene
G. Stainless set screw for adjustable spray nozzle height
H. 2-in. (50.8 mm) NPT threads
I. Sensor
J. 1-in. (25.4 mm) PVC coupling for submersible applications (supplied by others)
K. 1-in. (25.4 mm) PVC or stainless conduit (supplied by others)
L. Cable
M. Timer supplied by others or use timer feature in Rosemount instrument.

Figure 8: Rosemount 3900 Sensor with Jet Spray Cleaner



The jet spray cleaner eliminates routine, manual sensor maintenance by cleaning the sensor with water or compressed air. You can control flow through the cleaner with a solenoid valve.

Note

You can use the jet spray cleaner with the handrail mounting assembly (PN 11275-01, not shown), or you can mount it through the conduit as shown in Figure 8.

Figure 9: Low Flow Panel PN 00390-7101-0001

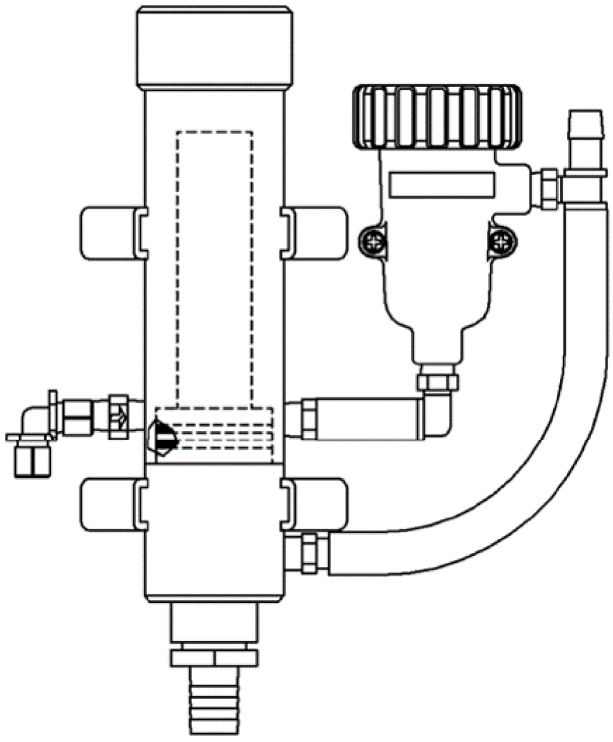



Table 5: Low Flow Panel Specifications

Inlet flow	3 to 80 gallons per hour (11.4 to 304 liters per hour)
Inlet pressure	3 to 65 psig (122 to 549 kPa)(1)
Temperature	32 to 122 °F (0 to 50 °C)

(1) *The minimum inlet pressure is required to open a check valve, which prevents the flow cell from draining if sample flow is lost. Removing the check valve lowers the inlet pressure requirement to a few feet of water head.*

Reference Manual
00809-0100-3581, Rev AC
October 2019

Rosemount™ 5081

Explosion Proof, Single-Input Intelligent Transmitter



ROSEMOUNT™

EMERSON™

Essential instructions

Read this page before proceeding!

Emerson designs, manufactures, and tests its products to meet many national and international standards. Because these instruments are sophisticated technical products, you must properly install, use, and maintain them to ensure they continue to operate within their normal specifications. The following instructions must be adhered to and integrated into your safety program when installing, using, and maintaining Emerson products. Failure to follow the proper instructions may cause any one of the following situations to occur: loss of life, personal injury, property damage, damage to this instrument, and warranty invalidation.

- Read all instructions prior to installing, operating, and servicing the product.
- If this Reference Manual is not the correct one, call 1-800-854-8257 or 949-757-8500 to request the correct Reference Manual. Save this Reference Manual for future reference.
- If you do not understand any of the instructions, contact your Emerson representative for clarification.
- Follow all warnings, cautions, and instructions marked on and supplied with the product.
- Inform and educate your personnel in the proper installation, operation, and maintenance of the product.
- Install equipment as specified in the installation instructions of the appropriate Reference Manual and per applicable local and national codes. Connect all products to the proper electrical and pressure sources.
- To ensure proper performance, use qualified personnel to install, operate, update, program, and maintain the product.
- When replacement parts are required, ensure that qualified people use replacement parts specified by Emerson. Unauthorized parts and procedures can affect the product's performance, place the safe operation of your process at risk, and VOID YOUR WARRANTY. Look-alike substitutions may result in fire, electrical hazards, or improper operation.
- Ensure that all equipment doors are closed and protective covers are in place, except when maintenance is being performed by qualified people, to prevent electrical shock and personal injury.

⚠ WARNING

Physical access

Unauthorized personnel may potentially cause significant damage to and/or misconfiguration of end users' equipment. This could be intentional or unintentional and needs to be protected against.

Physical security is an important part of any security program and fundamental to protecting your system. Restrict physical access by unauthorized personnel to protect end users' assets. This is true for all systems used within the facility.

Notice

ROSEMOUNT ("SELLER") SHALL NOT BE LIABLE FOR TECHNICAL OR EDITORIAL ERRORS IN THIS MANUAL OR OMISSIONS FROM THIS MANUAL. SELLER MAKES NO WARRANTIES, EXPRESSED OR IMPLIED, INCLUDING THE IMPLIED WARRANTIES OF MERCHANTABILITY AND FITNESS FOR A PARTICULAR PURPOSE, WITH RESPECT TO THIS MANUAL AND, IN NO EVENT, SHALL SELLER BE LIABLE FOR ANY SPECIAL OR CONSEQUENTIAL DAMAGES INCLUDING, BUT NOT LIMITED TO, LOSS OF PRODUCTION, LOSS OF PROFITS, ETC.

PRODUCT NAMES USED HEREIN ARE FOR MANUFACTURER OR SUPPLIER IDENTIFICATION ONLY AND MAY BE TRADEMARKS/ REGISTERED TRADEMARKS OF THESE COMPANIES.

THE CONTENTS OF THIS PUBLICATION ARE PRESENTED FOR INFORMATIONAL PURPOSES ONLY, AND WHILE EVERY EFFORT HAS BEEN MADE TO ENSURE THEIR ACCURACY, THEY ARE NOT TO BE CONSTRUED AS WARRANTIES OR GUARANTEES, EXPRESSED OR IMPLIED, REGARDING THE PRODUCTS OR SERVICES DESCRIBED HEREIN OR THEIR USE OR APPLICABILITY. WE RESERVE THE RIGHT TO MODIFY OR IMPROVE THE DESIGNS OR SPECIFICATIONS OF SUCH PRODUCTS AT ANY TIME.

SELLER DOES NOT ASSUME RESPONSIBILITY FOR THE SELECTION, USE, OR MAINTENANCE OF ANY PRODUCT. RESPONSIBILITY FOR PROPER SELECTION, USE, AND MAINTENANCE OF ANY SELLER PRODUCT REMAINS SOLELY WITH THE PURCHASER AND END-USER.

Warranty

1. LIMITED WARRANTY: Subject to the limitations contained in Section 2 herein and except as otherwise expressly provided herein, Rosemount ("Seller") warrants that the firmware will execute the programming instructions provided by Seller and that the Goods manufactured or Services provided by Seller will be free from defects in materials or workmanship under normal use and care until the expiration of the applicable warranty period. Goods are warranted for twelve (12) months from the date of initial installation or eighteen (18) months from the date of shipment by Seller, whichever period expires first. Consumables and Services are warranted for a period of 90 days from the date of shipment or completion of the Services. Products purchased by Seller from a third party for resale to Buyer ("Resale Products") shall carry only the

warranty extended by the original manufacturer. Buyer agrees that Seller has no liability for Resale Products beyond making a reasonable commercial effort to arrange for procurement and shipping of the Resale Products. If Buyer discovers any warranty defects and notifies Seller thereof in writing during the applicable warranty period, Seller shall, at its option, promptly correct any errors that are found by Seller in the firmware or Services, or repair or replace F.O.B. point of manufacture that portion of the Goods or firmware found by Seller to be defective, or refund the purchase price of the defective portion of the Goods/Services. All replacements or repairs necessitated by inadequate maintenance, normal wear and usage, unsuitable power sources, unsuitable environmental conditions, accident, misuse, improper installation, modification, repair, storage or handling, or any other cause not the fault of Seller are not covered by this limited warranty, and shall be at Buyer's expense. Seller shall not be obligated to pay any costs or charges incurred by Buyer or any other party except as may be agreed upon in writing in advance by an authorized Seller representative. All costs of dismantling, reinstallation and freight, and the time and expenses of Seller's personnel for site travel and diagnosis under this warranty clause shall be borne by Buyer unless accepted in writing by Seller. Goods repaired and parts replaced during the warranty period shall be in warranty for the remainder of the original warranty period or ninety (90) days, whichever is longer. This limited warranty is the only warranty made by Seller and can be amended only in a writing signed by an authorized representative of Seller. Except as otherwise expressly provided in the Agreement, THERE ARE NO REPRESENTATIONS OR WARRANTIES OF ANY KIND, EXPRESSED OR IMPLIED, AS TO MERCHANTABILITY, FITNESS FOR PARTICULAR PURPOSE, OR ANY OTHER MATTER WITH RESPECT TO ANY OF THE GOODS OR SERVICES. It is understood that corrosion or erosion of materials is not covered by our guarantee.

2. LIMITATION OF REMEDY AND LIABILITY: SELLER SHALL NOT BE LIABLE FOR DAMAGES CAUSED BY DELAY IN PERFORMANCE. THE SOLE AND EXCLUSIVE REMEDY FOR BREACH OF WARRANTY HEREUNDER SHALL BE LIMITED TO REPAIR, CORRECTION, REPLACEMENT, OR REFUND OF PURCHASE PRICE UNDER THE LIMITED WARRANTY CLAUSE IN SECTION 1 HEREIN. IN NO EVENT, REGARDLESS OF THE FORM OF THE CLAIM OR CAUSE OF ACTION (WHETHER BASED IN CONTRACT, INFRINGEMENT, NEGLIGENCE, STRICT LIABILITY, OTHER TORT, OR OTHERWISE), SHALL SELLER'S LIABILITY TO BUYER AND/OR ITS CUSTOMERS EXCEED THE PRICE TO BUYER OF THE SPECIFIC GOODS MANUFACTURED OR SERVICES PROVIDED BY SELLER GIVING RISE TO THE CLAIM OR CAUSE OF ACTION. BUYER AGREES THAT IN NO EVENT SHALL SELLER'S LIABILITY TO BUYER AND/OR ITS CUSTOMERS EXTEND TO INCLUDE INCIDENTAL, CONSEQUENTIAL OR PUNITIVE DAMAGES. THE TERM “CONSEQUENTIAL DAMAGES” SHALL INCLUDE, BUT NOT BE LIMITED TO, LOSS OF ANTICIPATED PROFITS, LOSS OF USE, LOSS OF REVENUE, AND COST OF CAPITAL.

Contents

Chapter 1 Start-up 7

Chapter 2 Description and specifications 9

2.1 Features and applications 9
2.2 General specifications 9
2.3 Rosemount 5081 - (A/P/C/T) product certifications 12
2.4 Functional specifications 15
2.5 Ordering information 17

Chapter 3 Install 19

3.1 Unpack and inspect 19
3.2 Installation guidelines 19
3.3 Orient the display board 20
3.4 Mount on a flat surface 21
3.5 Mount on a pipe 22

Chapter 4 Wire 25

4.1 Wiring overview 25
4.2 Power supply/current loop 25

Chapter 5 Display and operate 29

5.1 User interface and main display 29
5.2 Infrared remote control (IRC) 30
5.3 Menu system 31

Chapter 6 Programming basics 43

6.1 Programming 43
6.2 Test 4-20 mA outputs and current generated during hold and faults 43
6.3 Correct temperature 45
6.4 Set up a custom curve (conductivity measurements only) 46
6.5 Restore to factory default settings 47
6.6 Set access (security) code 47
6.7 Activate or deactivate HOLD 48

Chapter 7 Measurements 49

7.1 Calibrating pH sensors 49
7.2 Calibrating oxidation reduction potential (ORP) sensors 52
7.3 Calibrating contacting and toroidal conductivity sensors 54
7.4 Calibrating dissolved oxygen, ozone, free chlorine, total chlorine, and ozone sensors 56

Chapter 8 Diagnostics and troubleshooting 61

8.1 Warning and fault messages 61

8.2 pH/ORP diagnostics and troubleshooting....62
8.3 Contacting and toroidal conductivity diagnostics and troubleshooting....89
8.4 Chlorine, dissolved oxygen, and ozone diagnostics....100
8.5 Chlorine, dissolved oxygen, and ozone troubleshooting....103
8.6 Factory assistance and repairs....129

Chapter 9 Digital communications....131
9.1 HART® communications....131
9.2 FOUNDATION™ Fieldbus communication....132
9.3 Asset Management Solutions....134

Chapter 10 Return of material....137
10.1 General information....137
10.2 Warranty repair....137
10.3 Non-warranty repair....137

Appendix A Engineering Drawings....139

1 Start-up

Procedure

1. Using the infrared remote control (IRC), press **PROG**, **NEXT**, **NEXT**, and **ENTER** in this order.
2. Select the measurement type and unit of measurement.
3. Use the arrow keys to toggle between Celsius and Fahrenheit.
4. Press **ENTER** and then **RESET**.
5. Press **PROG**, **NEXT**, and **ENTER** in this order.
6. Use the arrow keys to toggle T AUTO between ON or OFF.

   This determines whether the transmitter uses the process temperature (ON) or a manual temperature (OFF).
7. Press **ENTER**.
8. If you select OFF, enter the manual temperature desired using the arrow keys.
9. Press **ENTER**.

2 Description and specifications

2.1 Features and applications

The Rosemount™ 5081 includes the following features:

General

The Rosemount 5081 explosion-proof transmitter is a loop powered device with a robust design that serves several industrial, commercial, and municipal applications. It offers a local operator interface (LOI) that can display values from a single measurement input. This transmitter is compatible with a multitude of analytical sensors.

Analytical measurements

- pH/ORP
- Contacting conductivity
- Toroidal conductivity
- Dissolved oxygen
- Ozone
- Chlorine

Maintenance features

- Automatic two-point buffer calibration routine
- Automatic recognition of resistance temperature device (RTD)
- Sensor diagnostics

Diagnostics

Continuous monitoring of sensor performance along with warnings and fault messages to alert the user of failures.

Enclosure

Explosion-proof and corrosion resistant

2.2 General specifications

Table 2-1: General Specifications

Housing	Cast aluminum with epoxy coating. NEMA® 4X(IP65) and NEMA7B. Neoprene O-ring seals.
Dimensions	6.3 x 6.9 x 6.4 in. (160.5 x 175.3 x 161.3 mm) See the engineering drawings in Engineering Drawings.
Conduit openings	¾-in. female national pipe thread (FNPT)
Ambient temperature	-4 to 149 °F (-20 to 65 °C)

Table 2-1: General Specifications *(continued)*

Storage temperature	-22 to 176 °F (-30 to 80 °C)
Relative humidity	0 to 95% (non-condensing)
Weight / shipping weight	10 lb./11 lb. (4.5 kg/5.0 kg)
Display	First line: 7 segment LCD, 0.8 in. (20 mm) high. This line shows process variables (pH/ORP, contacting conductivity, toroidal conductivity, etc.) Second line: 7 segment LCD, 0.3 in. (7 mm) high. This line shows process temperature, output current, warnings, faults, and messages during calibration/programming. Display board can be rotated 90 degrees clockwise or counterclockwise if desired.
Temperature resolution	0.1 °C
Hazardous location approval	For details, see Rosemount 5081 - (A/P/C/T) product certifications.
RFI/EMI	Meets all industrial requirements of EN61326.
Diagnostics (may slightly vary based on measurement type)	• Calibration error • Low temperature error • High temperature error • Sensor failure • Line failure • CPU failure • Calibration error • Zero error • Temperature slope error • Sensor failure • ROM failure • Input warning Once one of the above warnings/faults are diagnosed, the LOI will display a message describing the failure detected.

Table 2-2: HART® Digital Communications

Power and load requirements	Supply voltage at the transmitter terminals should be at least 12 Vdc. Power supply voltage should cover the voltage drop on the cable plus the external load resistor required for HART communications (250 Ohms minimum). Minimum power voltage is 12 Vdc. Maximum power voltage is 42.4 Vdc (30 Vdc for intrinsically safe operation). Figure 4-1 shows the supply voltage required to maintain 12 Vdc (upper line) and 30 Vdc (lower line) at the transmitter terminals when the current is 22 mA.
Analog output	Two-wire, 4-20 mA output with superimposed HART digital signal, scalable over the operating range of the sensor.
Output accuracy	±0.05 mA

Table 2-2: HART® Digital Communications *(continued)*

Variables assignable to	• pH • Temperature • mV • Glass impedance • Reference impedance • RTD resistance • Oxidation reduction potential (ORP) • Conductivity • Resistivity • Concentration • Raw conductivity • Chlorine • Dissolved oxygen • Dissolved ozone

Table 2-3: FOUNDATION™ Fieldbus Digital Communications

Power and load requirements	A power supply voltage of 9-32 Vdc at 22 mA is required.
AI blocks assignable to	• pH • Temperature • mV • Glass impedance • Reference impedance • RTD resistance • ORP • Conductivity • Resistivity • Concentration • Raw conductivity • Chlorine • Dissolved oxygen • Dissolved ozone

2.3 Rosemount 5081 - (A/P/C/T) product certifications

Rev 1.0

2.3.1 European Directive Information

A copy of the EU Declaration of Conformity can be found at the end of the Quick Start Guide. The most recent revision of the EU Declaration of Conformity can be found at Emerson.com/Rosemount.

2.3.2 Ordinary Location Certification

As standard, the Power Module has been examined and tested to determine that the design meets the basic electrical, mechanical, and fire protection requirements by a nationally recognized test laboratory (NRTL) as accredited by the Federal Occupational Safety and Health Administration (OSHA).

2.3.3 Installing equipment in North America

The US National Electrical Code® (NEC) and the Canadian Electrical Code (CEC) permit the use of Division marked equipment in Zones and Zone marked equipment in Divisions. The marking must be suitable for the area classification, gas, and temperature class. This information is clearly defined in the respective codes.

2.3.4 USA

FM hazardous locations

Certificate	FM17US0021X
Standards	FM Class 3600:2011, FM Class 3610:2015, FM Class 3611:2016 FM Class 3615:2006, FM Class 3810:2005, ANSI/NEMA 250:1991
Markings	FM APPROVED Intrinsically safe for use in Class I, II, and III, Division 1, Groups A, B, C, D, E, F, and G; T4 Ta = -20 °C to 70 °C; per control drawing numbers 1400676; 1400677 Nonincendive for Class I, Division 2, Groups A, B, C, and D; T4 Ta = -20 °C to 70 °C; per control drawing numbers 1400676; 1400677 Dust-ignitionproof for use in Class II and Class III, Division 1, Groups E, F, and G; T6 Ta = -20 °C to 70 °C;per control drawing number 1400678 Explosionproof for use in Class I, Div 1, Groups B, C, and D; T6 Ta = -20 °C to 70 °C; per control drawing number 1400678 Type 4X

Special Conditions for Safe Use (X):

1. The Rosemount 5081-T conductivity transmitters shall only be used with the Rosemount 222, 225, 226, 228 (1 in. and 2 in. only) and 245 toroidal sensors.

2.3.5 Canada

CSA hazardous locations

Certificate	1132747
Standards	C22.2 No. 0-M1987, C22.2 No. 25-1966, C22.2 No. 30-M1986 C22.2 No. 94-M91, C22.2 No 142-M1987, C22.2 No. 157-92, C22.2 No. 213-M1987
Markings	Intrinsically safe for Class I Groups A, B, C, and D; Class II Groups E, F, and G; Class III; T4 Tamb = 70 °C, per installation drawing 1400674 and 1400675 Non-incendive for Class I, Div. 2 for Groups A, B, C, and D; Class II, Div. 2, Groups F and G; Class III; T4 Tamb = 70 °C, per installation drawing 1400674 and 1400675 (Rosemount 5081-A/P/C/T) and per 1700462 (Rosemount 5081-T) Explosion-proof for Class I, Groups B, C, and D; Class II, Groups E, F, and G, Class III, T6 Tamb = 70 °C Type 4X

2.3.6 Europe

Rosemount 5081-A and 5081-P liquid transmitters

ATEX

Certificate	BAS02ATEX1284X
Standards	EN 60079-0:2012+A11:2013 EN 60079-11:2012
Markings	II 1 G Ex ia IIC T4 Ga (-20 °C ≤ Ta ≤ +65 °C)

Special Conditions for Safe Use (X):

1. The Rosemount 5081 enclosure may be made of aluminum alloy and given a protective polyurethane paint finish; however, care should be taken to protect it from impact or abrasion of located in a zone 0.

Rosemount 5081-C liquid transmitter

ATEX

Certificate	Baseefa03ATEX0099X
Standards	EN 60079-0:2012+A11:2013 EN 60079-11:2012

Markings	 II 1 G Ex ia IIC T4 Ga (-20 °C ≤ Ta ≤ +65 °C)

Special Conditions for Safe Use (X):

1. The equipment enclosure may contain light metals. The equipment must be installed in such a manner as to minimize the risk of impact or friction with other metal surfaces.

Rosemount 5081-T liquid transmitter

ATEX

Certificate	Baseefa03ATEX0399X
Standards	EN 60079-0:2012+A11:2013 EN 60079-11:2012
Markings	 II 1 G Ex ia IIC T4 Ga (-20 °C ≤ Ta ≤ +65°C)

Special Conditions for Safe Use (X):

1. The equipment may contain light metals. The equipment must be installed in such a manner as to minimize the risk or impact or friction with other metal surfaces.

2.3.7 International

IECEx

Certificate	IECEx BAS 09.0159X
Standards	IEC 60079-0:2011 IEC 60079-11:2011
Markings	Ex ia IIC T4 Ga (-20 °C ≤ Ta ≤ +65°C)

Special Conditions for Safe Use (X):

1. The Rosemount 5081 enclosure may be made of aluminum alloy and given a protective polyurethane paint finish; however, care should be taken to protect it from impact or abrasion if located in a zone 0 environment.

2.4 Functional specifications

The sections below display the specifications for measuring different substances with the Rosemount 5081.

2.4.1 pH/ORP specifications

pH range	0 to 14
ORP range	-1400 to +1400 mV
Calibration/standardization	The automatic buffer recognition uses stored buffer values and their temperature curves for the most common buffer standards available worldwide. The transmitter also performs a stabilization check on the sensor in each buffer. To make a manual two-point calibration, immerse the sensor in two different buffer solutions and enter the pH values. The microprocessor automatically calculates the slope which is used for self-diagnostics. The transmitter displays an error message if the pH sensor is faulty. The operator can read the slope on the display and/or manually adjust it if desired. To complete an on-line, one-point standardization process, enter the pH or ORP value of a grab sample as measured by a lab reference.
Preamplifier location	Use a preamplifier to convert the high impedance pH electrode signal to a low impedance signal for transmitter use. Use the transmitter's integral preamplifier when the sensor to transmitter distance is less than 15 ft. (4.5 m). Use a sensor with a built-in preamplifier or a junction box if distance is longer than 15 ft. (4.5 m).
Automatic temperature compensation	External 3 or 4 wire Pt 100 resistance temperature device (RTD) or Pt 1000 RTD, located in the sensor, compensates the pH reading for temperature fluctuations. Compensation covers the range 5 to 270 °F (-15 to 130 °C). The operator may also select manual temperature compensation.
Accuracy	±01 mv at 77 °F (25 °C) ± 0.01 pH
Repeatability	±01 mv at 77 °F (25 °C) ±0.01 pH
Stability	0.25% / year at 77 °F (25 °C)

2.4.2 Contacting conductivity specifications

Measured range	0-20,000 µS/cm
Calibration	To calibrate, immerse the sensor in a known solution and enter its value or enter the cell constant for ultra-pure applications.
Automatic temperature compensation	3-wire Pt 100 or Pt 1000 resistance temperature device (RTD) Conductivity: 32 to 392 °F (0 to 200 °C) Resistivity: 32 to 212 °F (0 to 100 °C) Low conductivity: 32 to 212 °F (0 to 100 °C)
Accuracy	± 0.5% of reading and ±0.001 µS/cm

Repeatability	± 0.25% of reading
Stability	0.25% of output range/month, non-cumulative
Ambient temperature coefficient	± 0.05% of reading/°C
Temperature slope adjustment	0 to 5%/°C
Other temperature compensation algorithms	Ultra-pure water compensation Cation conductivity Raw (uncompensated) conductivity
Compatible RTD	100 Ohm or 1000 Ohm with automatic recognition

2.4.3 Toroidal conductivity specifications

Measured range	50 to 2,000,000 µS/cm
Calibration	To calibrate, immerse the sensor in a known solution and enter its value.
Automatic temperature compensation	3-wire Pt 100 resistance temperature device (RTD) Conductivity: 32 to 392 °F (0 to 200 °C) % concentration: 32 to 212 °F (0 to 100 °C)
Accuracy	±1.0% of reading
Repeatability	±0.25% of reading
Stability	0.25% of output range/month, non-cumulative
Ambient temperature coefficient	±0.2% of FS/°C
Temperature slope adjustment	0 to 5% / °C
% concentration ranges	Sodium hydroxide: 0 to 15% Hydrochloric acid: 0 to 16% Sulfuric acid: 0 to 25% and 96 to 99.7%

2.4.4 Dissolved oxygen specifications

Measurement range	0 - 99 ppm (mg/L), 0 - 200 saturation
Resolution	0.01 ppm, 0.1 ppb for Rosemount 499ATrDO sensor
Temperature correction for membrane permeability	Automatic between 32 and 122 °F (0 and 50 °C). Can be disabled.
Calibration	Air calibration (user must enter barometric pressure) or calibration against a standard instrument

2.4.5 Free chlorine specifications

Measurement range	0-20 ppm (mg/L) as Cl_2
Resolution	0.001 ppm (auto-ranges at 0.999 to 1.00 and 9.99 to 10.0)
Temperature correction for membrane permeability	Automatic between 32 and 122 °F (0 and 50 °C). Can be disabled.

pH correction	Automatic between pH 6.0 and 9.5. Manual pH correction is also available.
Calibration	Calibrate against grab sample with portable test kit.

2.4.6 Total chlorine specifications

Measurement range	0-20 ppm (mg/L) as Cl_2
Resolution	0.001 ppm (auto-ranges at 0.999 to 1.00 and 9.99 to 10.0)
Temperature correction for membrane permeability	Automatic between 41 and 95 °F (5 and 35 °C). Can be disabled.
Calibration	Calibrate against grab sample with portable test kit.

2.4.7 Ozone specifications

Measurement range	0-10 ppm (mg/L)
Resolution	0.001 ppm (auto-ranges at 0.999 to 1.00 and 9.99 to 10.0)
Temperature correction for membrane permeability	Automatic between 41 and 95 °F (5 and 35 °C). Can be disabled.
Calibration	Against grab sample analyzed using portable test kit.

2.4.8 Percent oxygen in gas

Measurement range	0 - 25% oxygen
Resolution	0.1% - TBD
Calibration	Air calibration (automatic measurement of barometric pressure with internal pressure sensor)
Sample pressure	0 to 50 psig
Sample temperature	32 to 110 °F (0 to 43 °C)

2.5 Ordering information

The Rosemount 5081 two-wire transmitter is intended for the determination of pH/ORP, conductivity (both contacting and toroidal), and for measurements using membrane-covered amperometric sensors (oxygen, ozone, and chlorine). For free chlorine measurements, which often require continuous pH correction, a second input for a pH sensor is available. Use a hand-held infrared remote controller to locally configure and calibrate the transmitter.

Rosemount 5081	**Smart two-wire microprocessor transmitter**
Option	**Description**
P	pH/ORP
C	Contacting conductivity

T	Toroidal conductivity
A	Amperometric (oxygen, ozone, and chlorine)
Option	**Description**
HT	Analog 4-20 mA output with superimposed HART® digital signal
FF	FOUNDATION™ Fieldbus digital output
FI	FOUNDATION Fieldbus digital input with FISCO
Option	**Description**
20	Infrared remote controller included
21	Infrared remote controller not included
Option	**Description**
60	No approval
67	FM approved intrinsically safe, non-incendive (when used with appropriate sensor and safety barrier), and explosion-proof
69	CSA approved intrinsically safe, non-incendive (when used with appropriate sensor and safety barrier), and explosion-proof
73	ATEX/IECEx approved intriniscally safe (when used with appropriate sensor and safety barrier)
Example	**5081-P-HT-20-67**

3 Install

3.1 Unpack and inspect

To unpack the instrument:

Procedure

1. Inspect the shipping container(s). If there is damage, contact the shipper immediately for instructions.
2. If there is no apparent damage, unpack the container(s).
3. Ensure that all items shown on the packing list are present.
   If items are missing, contact your local Customer Care representative
4. Save the shipping container and packaging.
   They can be used to return the instrument to the factory in case of damage.

3.2 Installation guidelines

1. The transmitter tolerates harsh environments. For best results, install the transmitter in an area where temperature extremes, vibrations, and electromagnetic and radio frequency interference are minimized or absent.
2. To prevent unintentional exposure of the transmitter circuitry to the plant environment, keep the security lock in place over the circuit end cap. To remove the circuit end cap, loosen the lock nut until the tab disengages from the cap end and then unscrew the cover.
3. The transmitter has two ¾-in. conduit openings, one on each side of the housing. Run sensor cable through the left side opening (as viewed from the wiring terminal end of the transmitter) and run power wiring through the right side opening.
4. Use water tight cable glands to keep moisture out of the transmitter.
5. If using conduit, plug and seal the connections at the transmitter housing to prevent moisture from getting inside the transmitter.

   ⚠ CAUTION

   Equipment damage

   Moisture accumulating in the transmitter housing can affect the performance of the transmitter and may void the warranty.

6. If the transmitter is installed some distance from the sensor, a remote junction box with preamplifier in the junction box or in the sensor may be necessary. Consult the sensor reference manual for maximum cable lengths.

3.3 Orient the display board

The display board can be rotated 90 degrees, clockwise or counterclockwise, from the original position. To reposition the display:

Procedure

1. Loosen the cover lock nut until the tab disengages from the circuit end cap. Unscrew the cap.
2. Remove the three bolts holding the circuit board stack.
3. Lift and rotate the display board 90 degrees, clockwise or counterclockwise, into the desired position.
4. Position the display board on the stand offs. Replace and tighten the bolts.
5. Replace the circuit end cap.

3.4 Mount on a flat surface

Figure 3-1: Mounting Transmitter on a Flat Surface

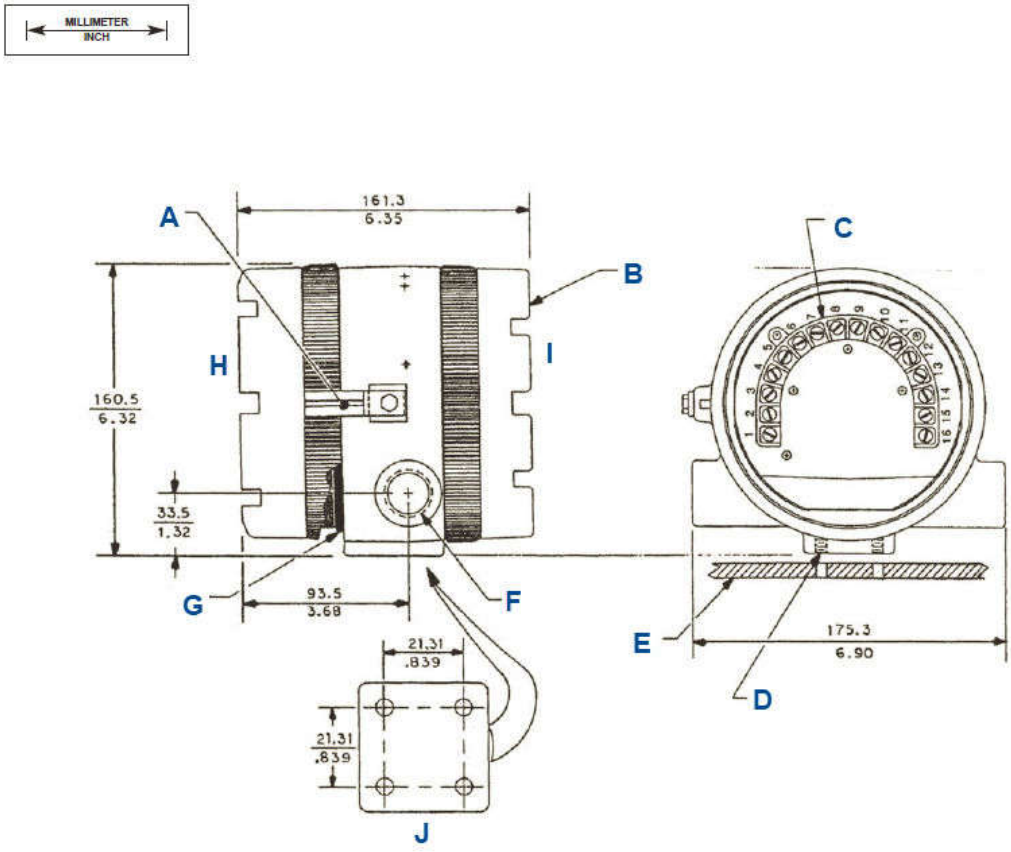

A. *Cover lock*
B. *Threaded cap (two places)*
C. *Terminal block (TB). Terminal end cap omitted for clarity this view.*
D. *¼-in. - 20 threads (four places)*
E. *Surface plate (by others)*
F. *O-ring (two places)*
G. *Circuit end*
H. *Terminal end*
I. *Flat surface mounting pad hole pattern*

3.5 Mount on a pipe

Use pipe mounting kit (23820-00 or 23820-01).

Figure 3-2: Mounting Transmitter on a Pipe

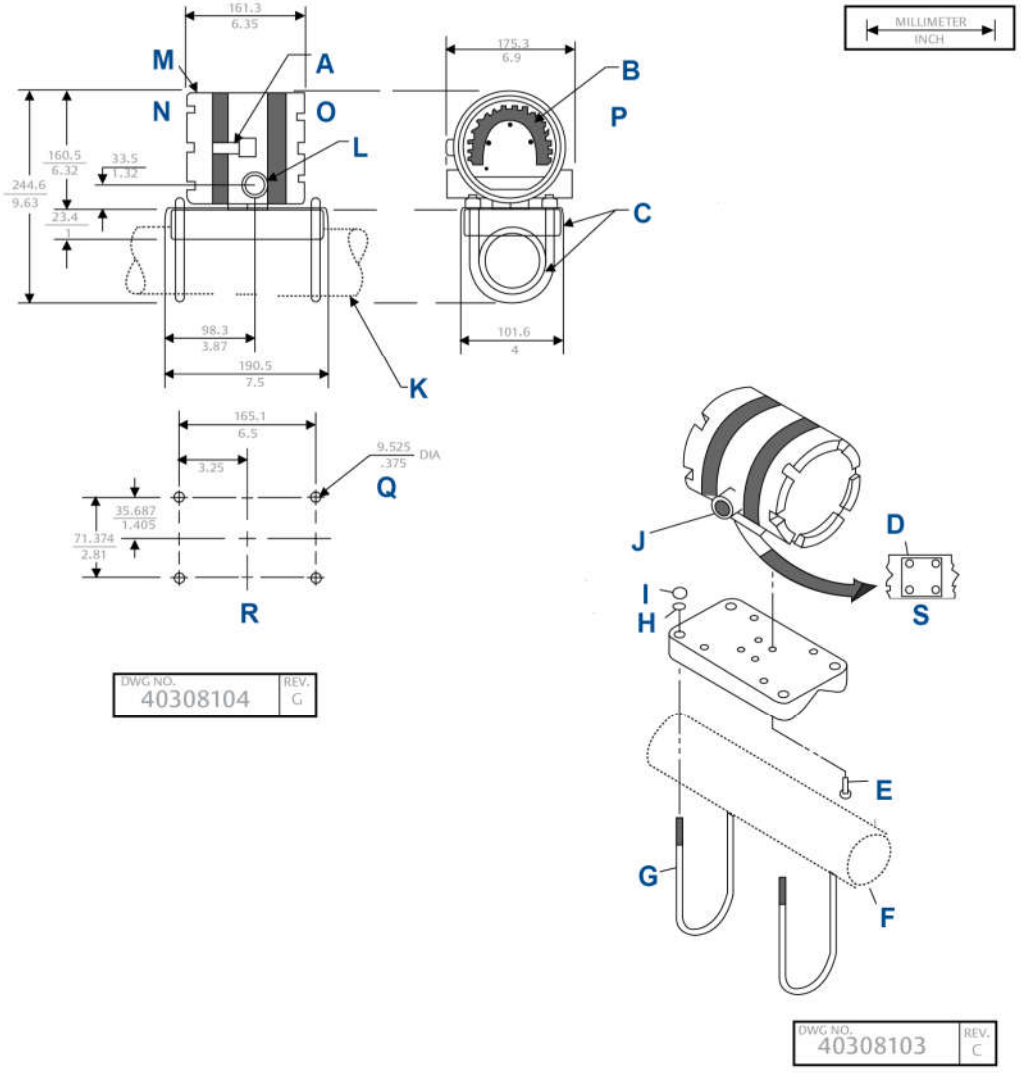

A. *Over look*
B. *Terminal block*
C. *Kit, 2-in. pipe/wall mounting bracket*
   Order PN2002577 as a separate item.
D. *½ - 20 threads*
E. *¼ - 20 screw*
   Screws furnished with mounting kit only. Not furnished with transmitter.
F. *1½-in. to 2-in. pipe (customer furnished)*
G. *U-bolt*

H. 5/16 washer
I. 6/18 - 18 nut
J. ¾ - 14 FNPT (two places)
K. 2-in. pipe supplied by customer
L. ¾ - 14 NPT (two places)
M. Threaded cap, two places
N. Circuit end
O. Terminal end
P. Terminal end cap omitted for clarity this view
Q. Four mounting holes
R. Bottom view

4 Wire

4.1 Wiring overview

To find wiring diagrams for specific sensors, check the wiring sections of the reference manuals for those particular sensors.

4.2 Power supply/current loop

4.2.1 Power supply overview

The tables below display the minimum and maximum voltages needed to operate the transmitter.

Minimum supply voltage at the transmitter terminals	12.0 Vdc
Minimum power supply for load resister	250 Ohms
Maximum power supply voltage	42.0 Vdc
Maximum power supply voltage for intrinsically safe installations	30.0 Vdc

Figure 4-1: Power Supply Voltage for HART® or without HART Communication Configurations

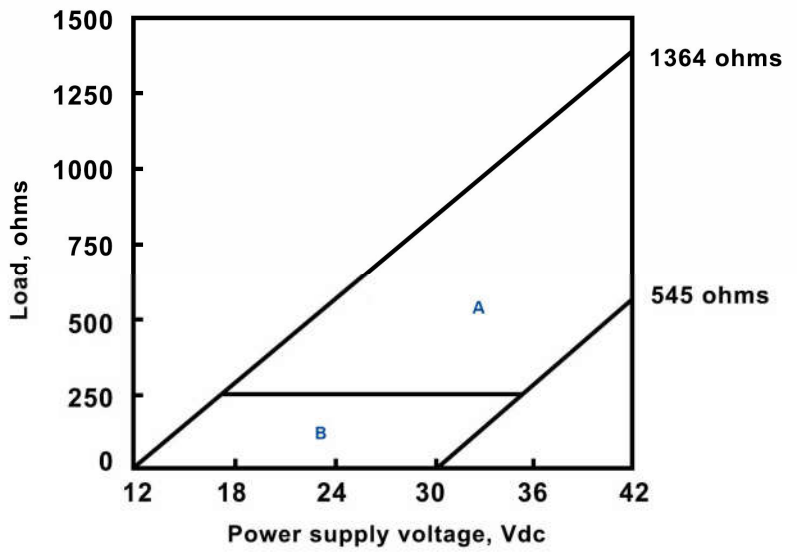

A. With HART communication
B. Without HART communication

Table 4-1: Values from Graph

Upper line	Power supply voltage needed to provide 12 Vdc at the transmitter terminals for a 22 mA current
Lower line	Power supply voltage needed to provide 30 Vdc for a 22 mA current
Maximum current	About 24 mA
Minimum load for digital communications	250 Ohms
Minimum power supply voltage to supply the 12.0 Vdc lift off voltage at the transmitter	17.5 Vdc

4.2.2 Wire to HART® or FOUNDATION™ Fieldbus communication protocol

Procedure

1. Run the power/signal wiring through the opening nearest terminals 15 and 16.
2. Use shielded cable and ground the shield to the power supply.
3. To ground the transmitter, attach the shield to the grounding screw on the inside of the transmitter case.

   You can also use a third wire to connect the transmitter to earth ground.

Note
For optimum EMI/RFI immunity, shield the power supply and enclose it in an earth ground metal conduit. Do not run power supply/signal wiring in the same conduit or cable tray with AC power lines or with relay actuated signal cables. Keep power supply/signal wiring at least 6 ft. (2 m) away from heavy electrical equipment. An additional 0-1 mA current loop is available between TB-14 and TB-15. A 1 mA current in this loop signifies a sensor fault. See Figure 4-2 for wiring instructions. See Diagnostics and troubleshooting for more information about sensor faults.

Figure 4-2: General Wiring Architecture

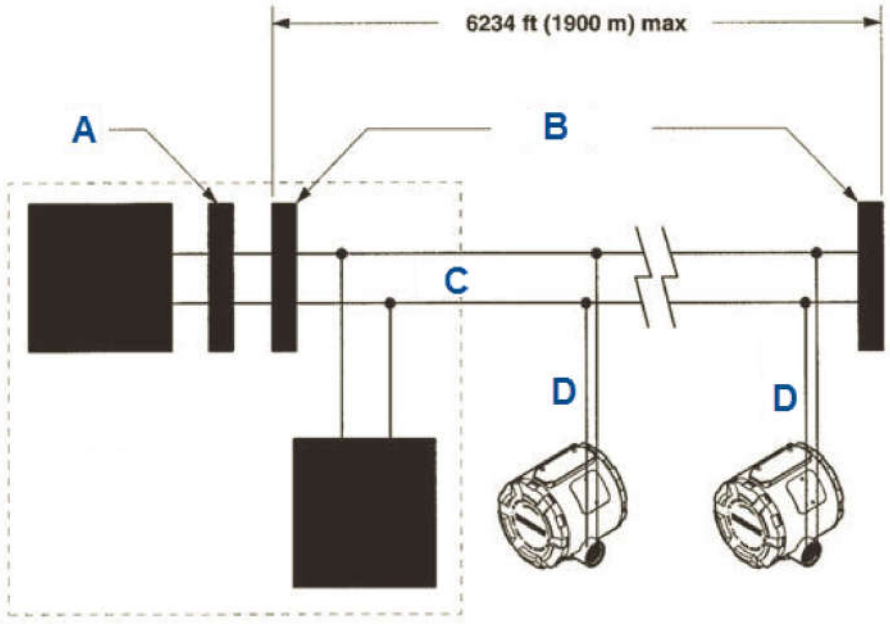

A. Filter
B. Terminators
C. Trunk
D. Spur

The power supply, filter, first terminator, and configuration device are typically located in the control room.

5 Display and operate

5.1 User interface and main display

The following are examples of the main (process) display screen (Figure 5-1) and the program display screen (Figure 5-2).

Figure 5-1: Main Display Screen

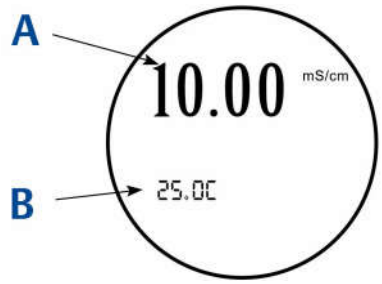

A. Conductivity value
B. Temperature in °C or °F

Figure 5-2: Program Display Screen

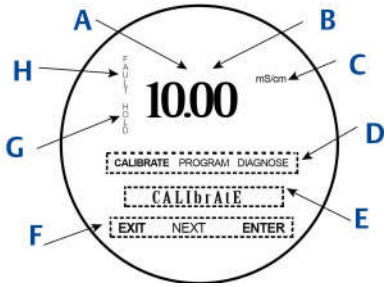

A. Indicates HART® or FOUNDATION™ Fieldbus digital communiciations
B. Conductivity value
C. Units of display
D. Active menu: CALIBRATE, PROGRAM, or DIAGNOSE
E. Sub-menus, prompts, and diagnostic messages appear here.
F. Available commands for sub-menus, prompts, or diagnostic messages
G. Appears when transmitter is in hold
H. Appears when a disabling condition has occurred

5.2 Infrared remote control (IRC)

Use the IRC to read diagnostics messages, calibrate connected sensors, and program the transmitter. Hold the IRC within 6 ft. (1.8 m) of the transmitter and less than 15 degrees from the horizontal of the display window.

Figure 5-3: Infrared Remote Control (IRC) Functions

1. **RESET** • End current operation and return to the main display. • Changes are not saved. • Does not return the transmitter to factory default settings.	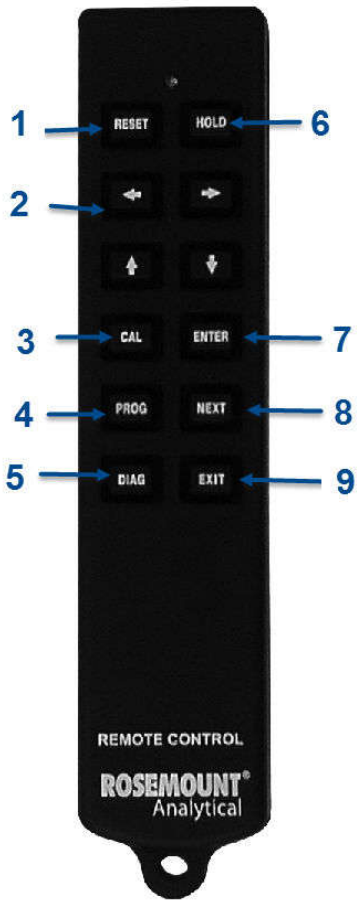	6. **HOLD** • Access to turn hold readings on or off.
2. Editing (arrow) keys • Change values of a flashing display. • Left and right arrows move the cursor by one digit. • Up and down arrows increase or decrease the values and navigate through the display options.		7. **ENTER** • Advance to the next prompt. • Store selected item. • Store value in memory.
3. **CAL** • Access to ***Calibration*** menu.		8. **NEXT** • Advance to the next sub-menu.
4. **PROG** • Access to ***Program*** menu.		9. **EXIT** • End current operation. • Return to the first prompt in the present sub-menu. • Changes are not saved.
5. **DIAG** • Access to diagnostics.		

Guidelines for using IRC

- Do not use harsh chemicals or abrasive brushes when cleaning the remote control.
- If the green LED does not light when you press a key, the issue is probably a weak battery. To restore operation, remove four screws to access and replace the two batteries. Observe the two warning messages posted at the rear of the remote control.
- Requires two 1.5 V AAA batteries. If used in hazardous areas, replacement batteries must be Energizer E92/EN92 or Duracell MN2400/PC2400.
- All functions for remote control PN 24479-00 are the same as those for the previous remote control, PN 23572-00.

5.3 Menu system

There are three main menus: ***Calibrate***, ***Program***, and ***Diagnose***. ***Calibrate*** and ***Program*** menus have additional sub-menus as shown in the figures below.

Table 5-1: Program Menu

Displayed item	Definition
OUtpUt	Current output menu header
4MA	4 mA current output (setpoint)
20MA	20 mA current output (setpoint)
HoLd	Current output on hold
FAULt	Fault condition current output setting
dPn	Current output dampening time
tESt	Current output test value
tAUtO	Automatic temperature compensation
tMAn	Manual temperature compensation
dISPLAY	Display menu header
tYP	Measurement type
tEMP	° C/° F toggle selection
OUtPUt	Current (mA) or percent of full scale display
COdE	Access code
OFFSt	Offset value

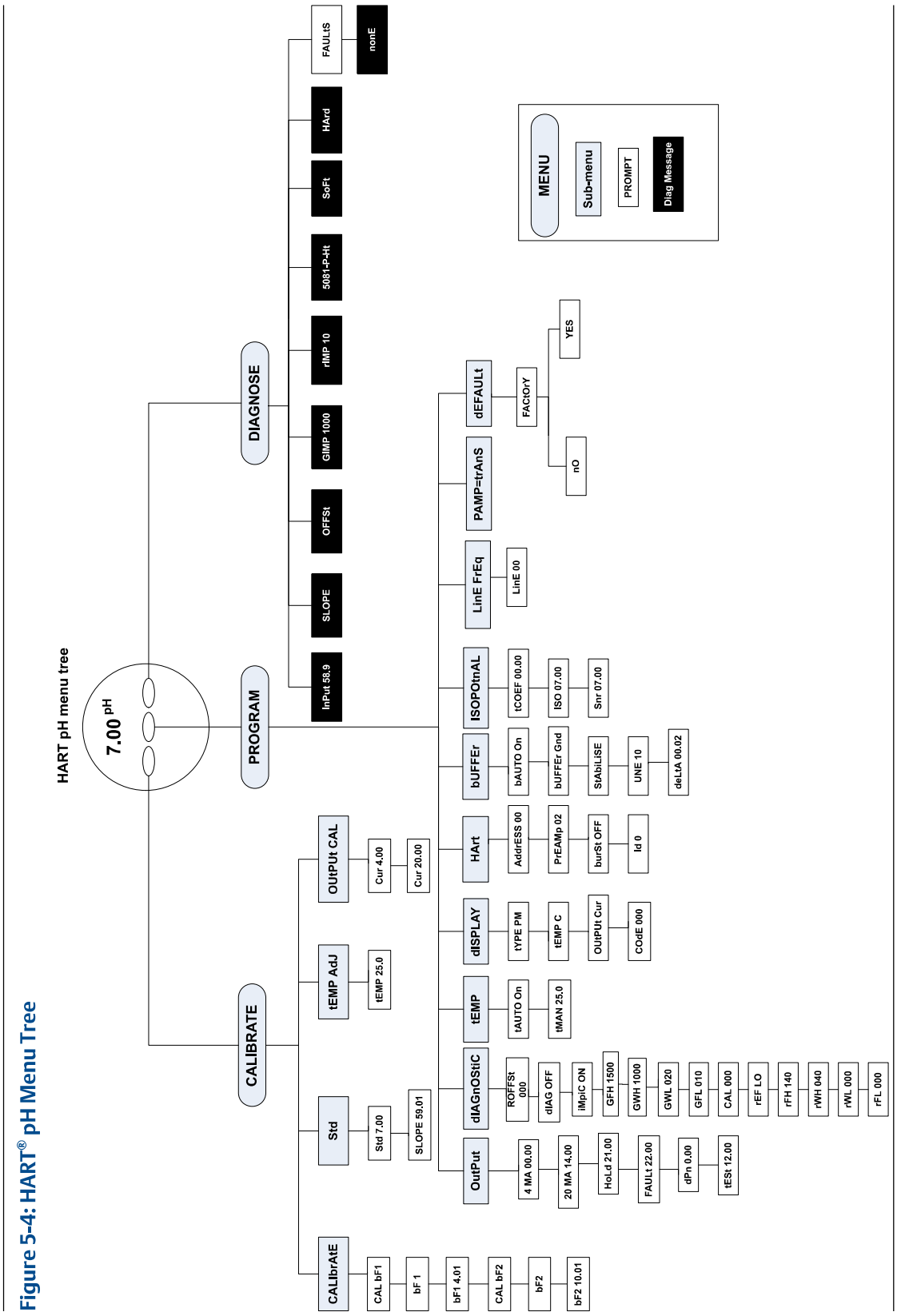

Figure 5-4: HART® pH Menu Tree

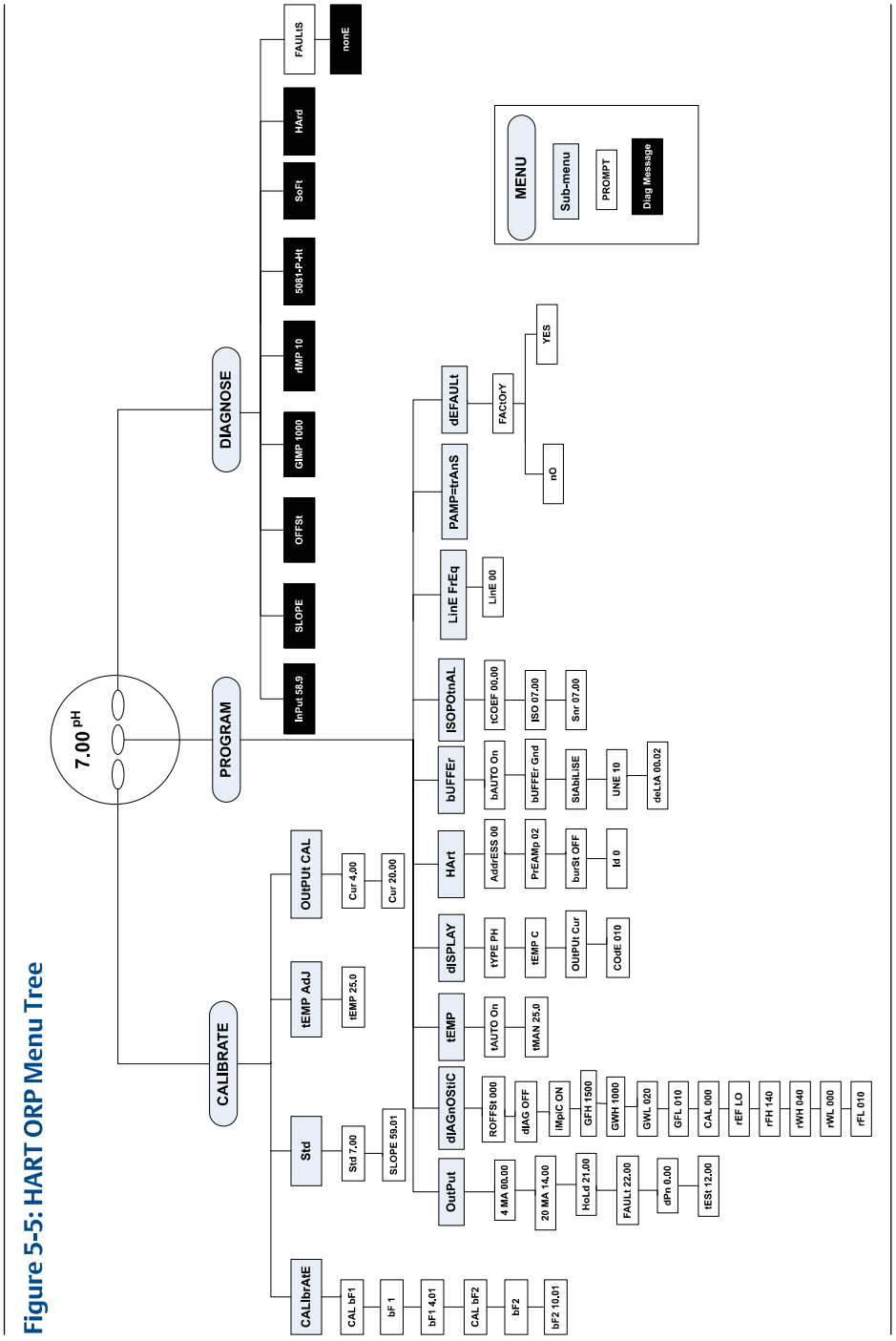

Figure 5-5: HART ORP Menu Tree

Figure 5-6: HART Contacting Conductivity Menu Tree

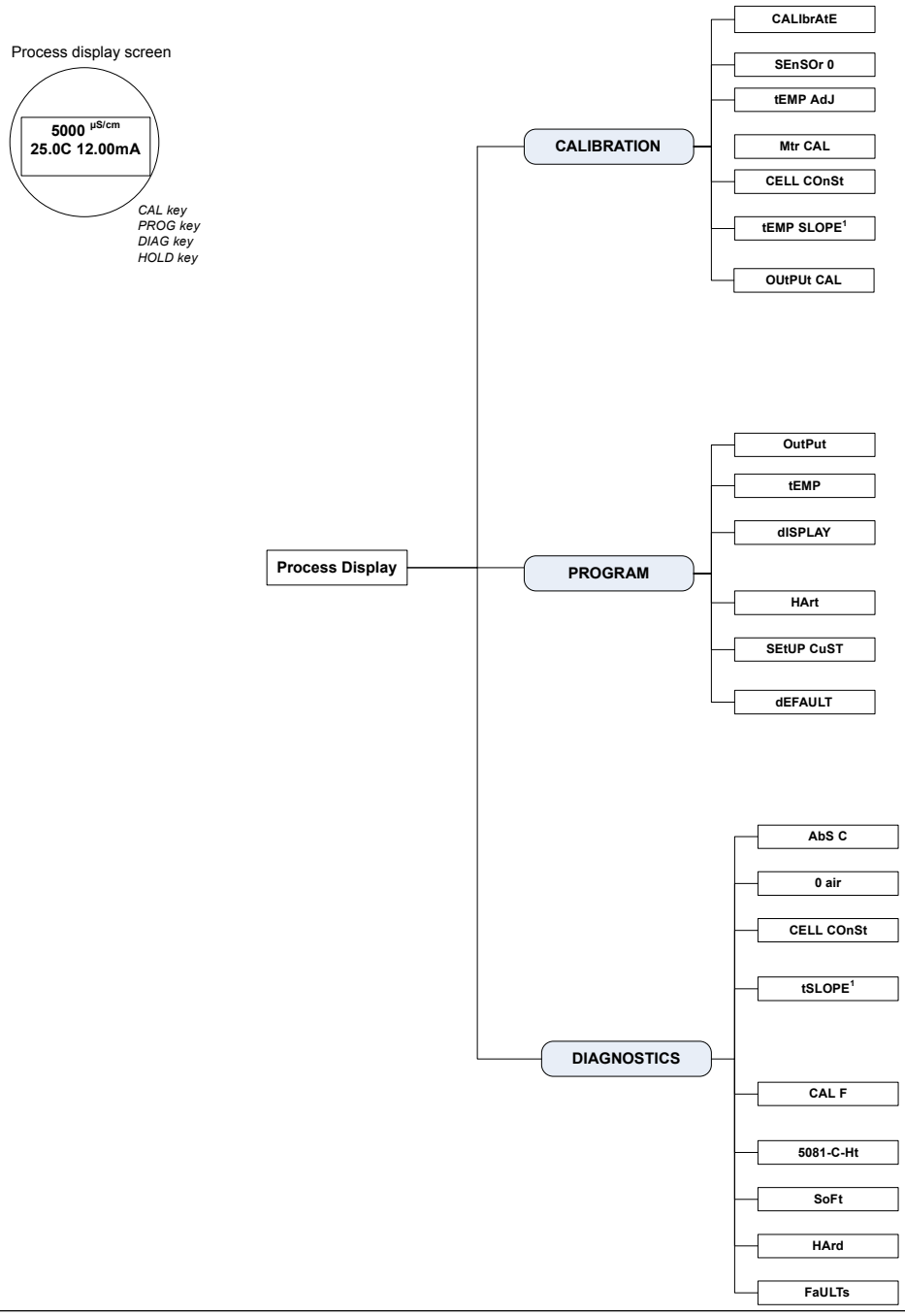

Figure 5-7: HART Toroidal Conductivity Menu Tree

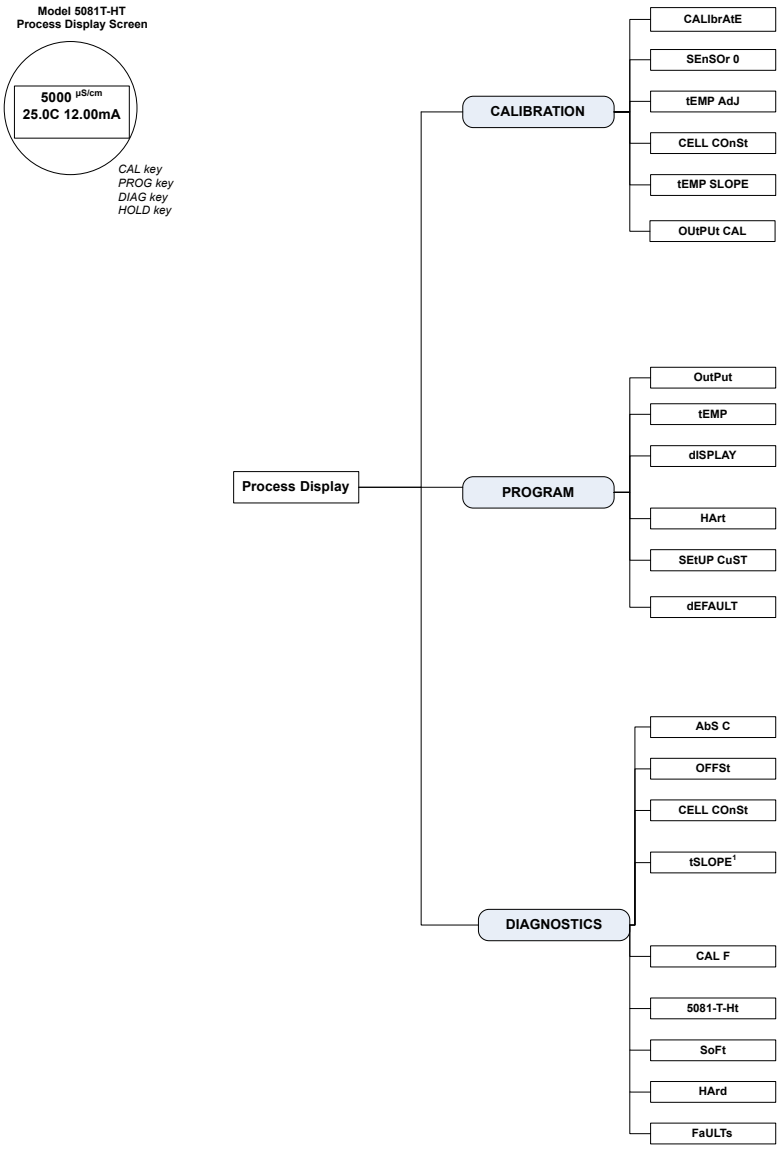

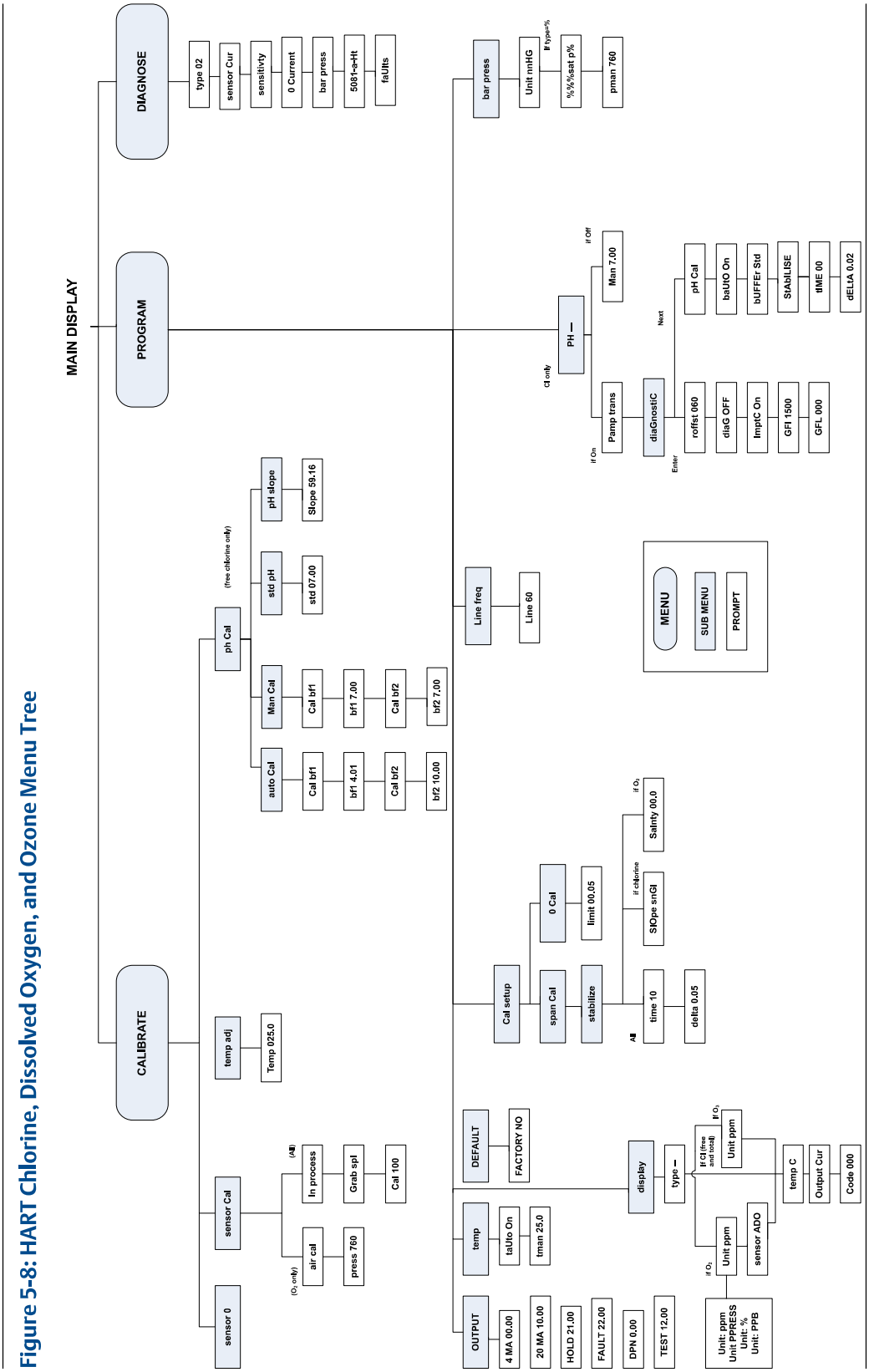

Figure 5-8: HART Chlorine, Dissolved Oxygen, and Ozone Menu Tree

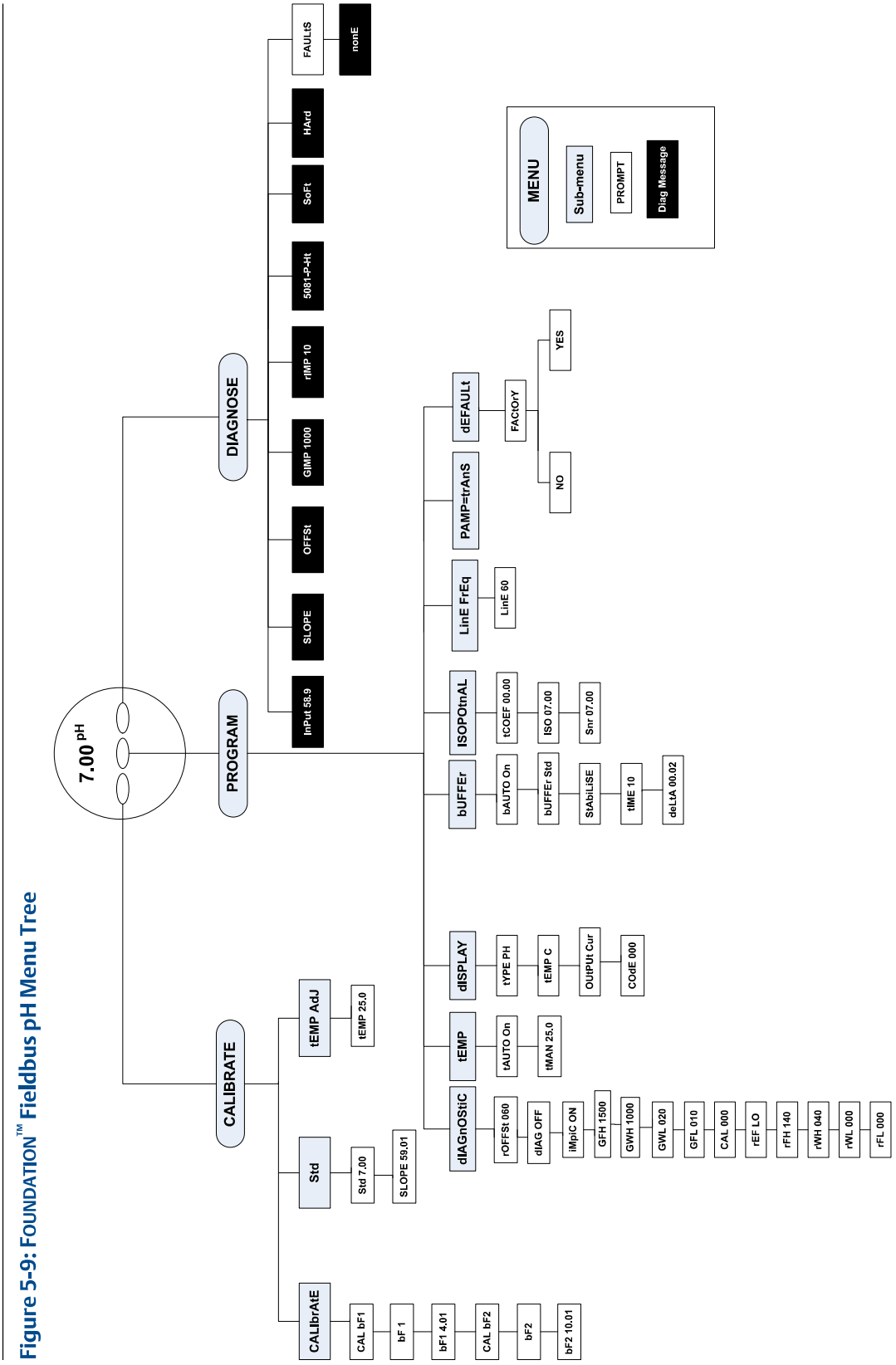

Figure 5-9: FOUNDATION™ Fieldbus pH Menu Tree

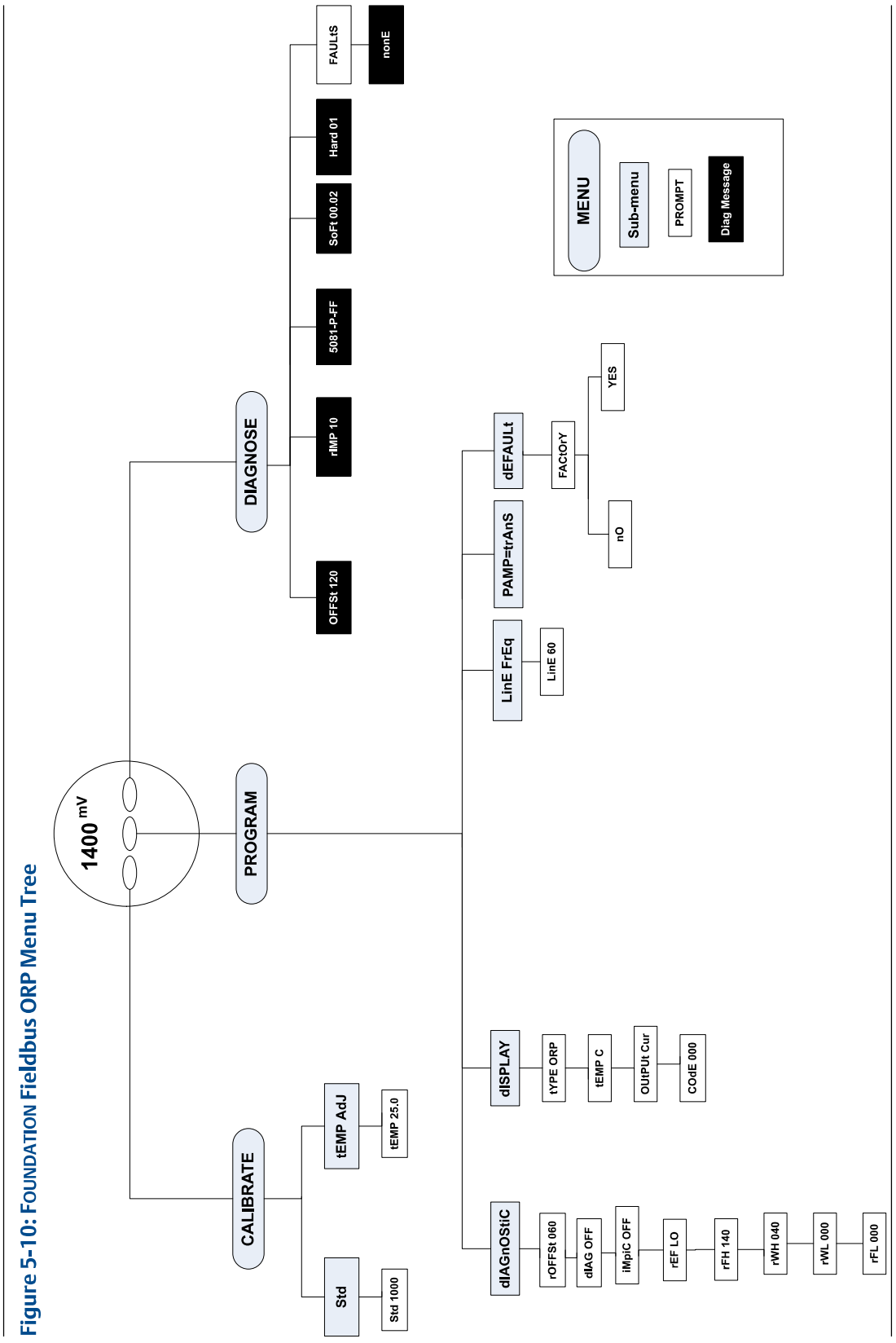

Figure 5-10: FOUNDATION Fieldbus ORP Menu Tree

Figure 5-11: FOUNDATION Fieldbus Contacting Conductivity Menu Tree

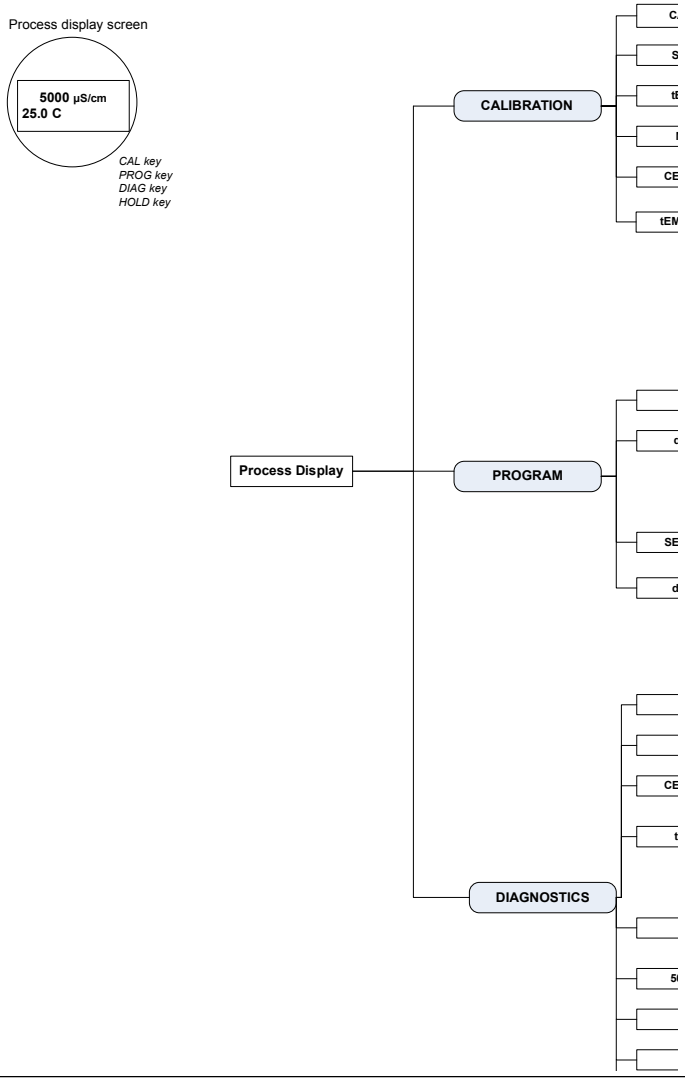

Figure 5-12: FOUNDATION Fieldbus Toroidal Conductivity Menu Tree

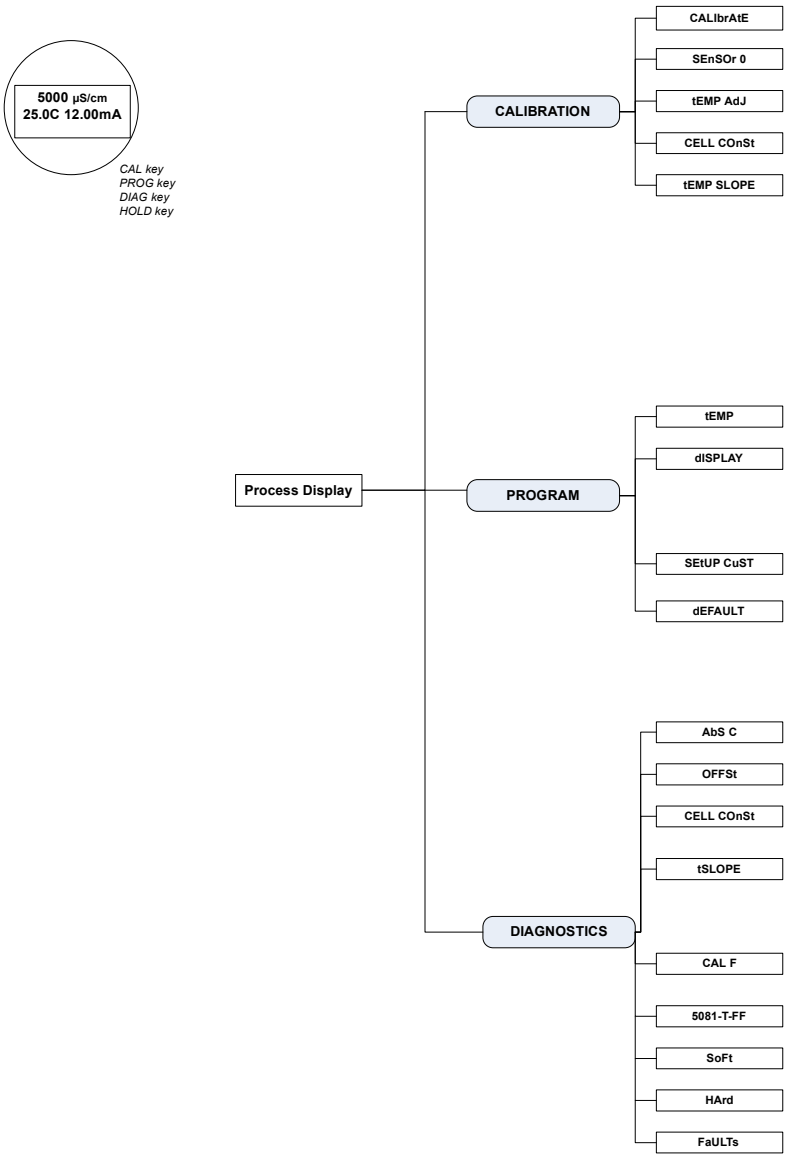

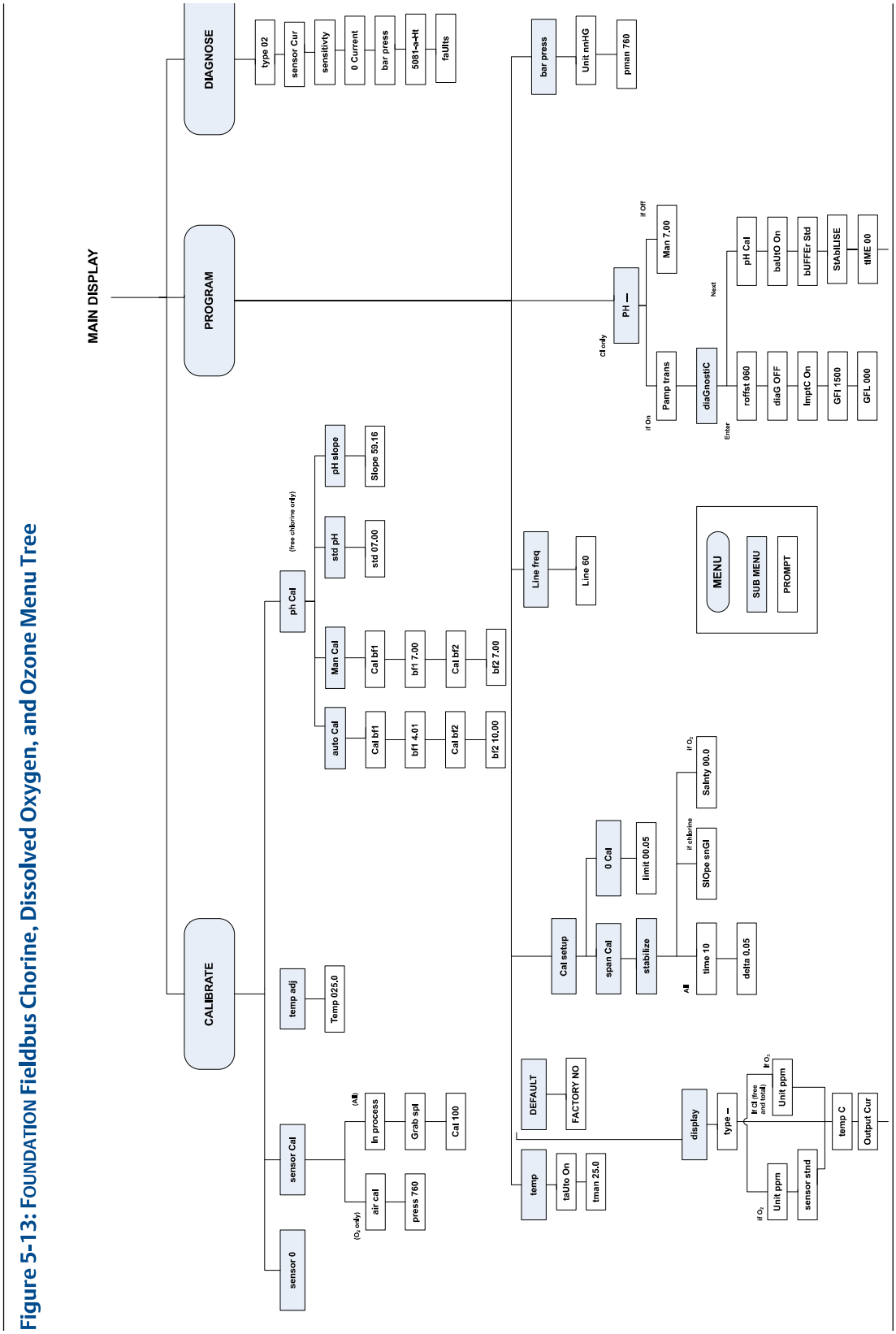

Figure 5-13: FOUNDATION Fieldbus Chorine, Dissolved Oxygen, and Ozone Menu Tree

6 Programming basics

6.1 Programming

The following can be programmed in the Rosemount™ 5081:

- 4-20 mA outputs
- Current generated by the transmitter during hold
- Current generated by the transmitter when fault is detected
- Automatic temperature correction (enable or disable)
- Type of measurement
- Measurement range
- Factory default setting

6.2 Test 4-20 mA outputs and current generated during hold and faults

Procedure

1. Press **PROG** on the remote controller.
   The *OUTPUT* submenu appears.

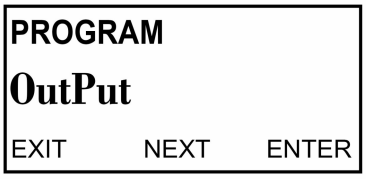

2. Press **ENTER**.
   The screen displays the `4mA` prompt.

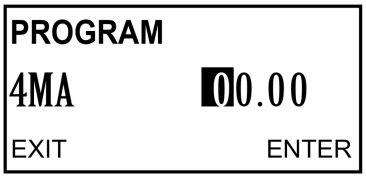

3. Use the arrow keys to change the setting. Press **ENTER** to save.
   The screen displays the `20mA` prompt.

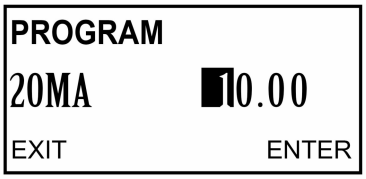

4. Use the arrow keys to change the setting. Press **ENTER** to save.
   The screen displays the `HOLD` prompt.

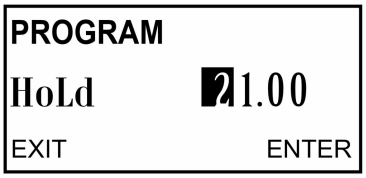

5. Use the arrow keys to change the setting to the output desired when the transmitter is in hold mode.

   The range is 3.80 to 22.0 mA. If you select 00.00, the transmitter will hold the output value.

6. Press **ENTER** to save.

Note
The hold setting overrides the fault setting.

   The screen displays the `FAULT` prompt.

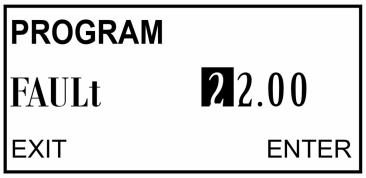

7. Use the arrow keys to change the setting to the output desired when the transmitter is in fault mode.

   The range is 3.80 to 22.0 mA. If you select 00.00, the transmitter will hold the output value.

8. Press **ENTER** to save.
   The screen displays the `DPN` prompt.

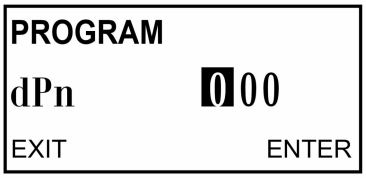

9. Use the arrow keys to change the setting.
   The range is 0 to 225.

10. Press **ENTER** to save.
    The screen displays the `TEST` prompt.

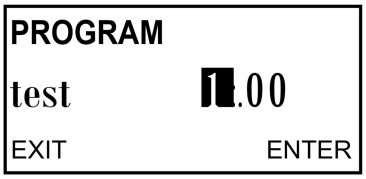

11. Use the arrow keys to enter the desired test current. Press **ENTER** to start the test. Press **EXIT** to end the test.
12. Press **RESET** to return to the main display.

6.3 Correct temperature

Procedure

1. Press **PROG**. Press **NEXT** until the ***TEMP*** submenu appears on the display.

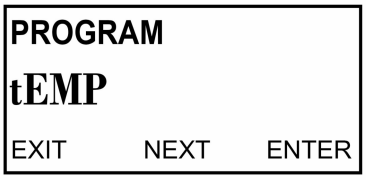

2. Press **ENTER**.
   The screen displays the `T AUTO` prompt.

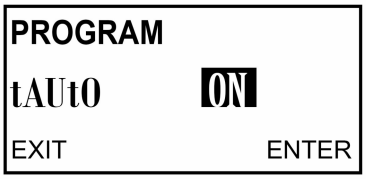

3. Use the up or down arrow keys to enable (ON) or disable (OFF) the automatic temperature correction feature. Press **ENTER** to save.
   The screen displays the `T MAN` prompt.

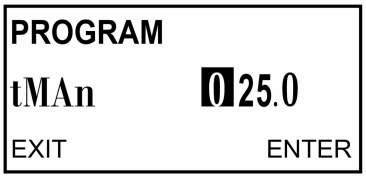

4. Use the arrow keys to change to the desired temperature.

   To enter negative numbers, press the left or the right arrow key until no digit is flashing. then press the up or down arrow keys to display the negative sign. The range is 23 to 266 ° F (-5.0 to 130 °C).

5. Press **ENTER** to save. Press **RESET** to return to the main display.

Note
If you disabled T AUTO in Step 3, then the transmitter will use the temperature entered in this step in all subsequent measurements, no matter the actual process temperature.

6.4 Set up a custom curve (conductivity measurements only)

Use custom curves to correlate conductivity to concentration of the measured liquid. The Rosemount 5081 has programmable custom curves that can create a curve (second order) from three to five user supplied points. If it only uses two points, then then the transmitter creates a linear curve (straight lin). In order for the curve to be accurate, take the data points from the liquid having the same reference temperature.

To obtain best results, select data points that are representative of the typical operating range and have at least 5% difference in conductivity values. Observe the graph of conductivity vs. concentration for the particular liquid to ensure that unsuitable points are avoided. Unsuitable points include conductivity values with two concentrations associated with them. In addition to unsuitable points, record any critical points - points that best describe the curve. Following these general guidelines will provide optimal results.

Enter the first point (COND 1) at the normal operating condition. Then enter other points above and below COND 1. Nonlinear conductivity curves require additional data points to characterize these regions. Do not use the same data point more than once and only use actual data (do not interpolate data points).

Note
The default values for the custom curve are three data points, reference temperature of 77 °F (25 °C), and a linear temperature slope of two percent/°C. This combination will yield the best results in most applications. If the normal temperature is over 104 °F (40 °C) or under 50 °F (10 °C), change the reference temperature to the normal process temperature. If known, use the temperature slope at the reference temperature.

Procedure

1. From the main menu, select PROG and then press **NEXT** four times.
   `SETUP CUST` appears.
2. Press **ENTER**.
   `T REF` appears.
3. If needed, change the reference temperature from the factory default 77 °F (25 °C) to a different reference temperature for the process. Press **ENTER**.
   `UNIT` appears.
4. Press the up or down arrow to select the desired measurement units: `µS` (microsiemens), `mS` (millisiemens), `none` (no units displayed), `%` (percent), or `ppm` (parts per million); then press **ENTER**.
   `NUM PTS` appears.

5. Press up or down arrows to select the desired number of data points for a custom conductivity curve. Select `2` to generate a linear relationship for conductivity and concentration at the given temperature.
   a) Enter the concentration for point 1 (displayed as `µS 1`). Press **ENTER**.
   b) Enter the known conductivity for point 1 in µS/cm. Press **ENTER**.
   c) Complete this process for additional known data points. Press **ENTER**.
   `CALC CUST` appears briefly.
   d) Press **ENTER**.
   `PROCESSING` appears briefly; then `APPLY CUST` appears.
   e) Press **ENTER** to register the custom curve into memory and return to the ***SETUP CUST*** screen.

The custom curve will now be used to display and output all conductivity measurement when the operator selects `CUST` as the measurement type in the ***Display*** menu.

6.5 Restore to factory default settings

The operator can erase user-defined configurations to return the transmitter to the factory default settings.

Procedure

1. Press **PROG** on the remote controller.
2. Press **NEXT** until `DEFAULT` appears in the display. Press **ENTER**.
3. Use the up and down arrows to toggle between NO and YES. Press **ENTER** to return to the factory default settings.

6.6 Set access (security) code

6.6.1 Security overview

The access (security) code prevents program and calibration settings from accidental changes. Emerson ships the transmitter with the access (security) code disabled.

6.6.2 Enter the access (security) code

Procedure

1. If calibration and program settings are protected with a security code, press **PROG** or **CAL** on the infrared remote controller.
   The ***ID*** screen appears.
2. Use the editing keys to enter the code. Press **ENTER**.
   If the code is correct, the first sub-menu appears. If the security code is incorrect, the process display reappears.

6.6.3 Retrieve a lost security code

Procedure

1. If the you forget the security code, enter `555` at the ID prompt and press **ENTER**.
   The transmitter displays the present code.
2. Press **EXIT** to return to the process display.
3. Press **PROG** or **CAL**.
   The ***ID*** screen appears.
4. Use the editing keys to enter the security code. Then press **ENTER**.
   The first sub-menu under the selected menu appears.

6.7 Activate or deactivate HOLD

Activating HOLD keeps the transmitter output at the last value or sends the output to a previously determined value. This is particularly useful when doing calibrations. During calibrations, the sensor may be exposed to solutions that have concentrations outside the normal range of the process. HOLD prevents false alarms and undesired operation as a result of that reading. You can deactivate HOLD when the sensor is reinstalled in the process stream and the readings have relatively stabilized.

Procedure

1. Press **HOLD** on the remote controller.
   The `HOLD` prompt appears in the display.
2. Press **3** (up) or **5** (down) to toggle HOLD between ON and OFF.
3. Press **ENTER** to save.

7 Measurements

7.1 Calibrating pH sensors

7.1.1 Calibration overview

The ***Calibration*** menu allows you to calibrate the pH and temperature response of the sensor. To calibrate, use either the manual or the auto-calibration option. In both cases, the transmitter does a two-point calibration for pH and one-point standardization against a reference thermometer for temperature. In auto-calibration, the transmitter automatically stores the temperature-corrected calibration data. In manual calibration, you have to enter buffer values. The values are only registered when the readings are stable (automatically determined by the transmitter). All calibration procedures are guided by prompts on the display.

7.1.2 Calibration standards (buffer solutions)

- Calibrations are critical to make accurate pH measurements.
- Emerson recommends that the value of one of the pH buffer solutions is lower than the pH of the process stream and the value of the other pH buffer solution is higher than the pH of the process stream.
- For best results, make sure that the temperature of the solution is the same temperature as that of the sensor. Allow the entire measurement cell, sensor, and solution to reach relatively constant temperature.
- Using buffers at high temperatures can cause evaporation, which will change the concentration of the buffer. The change in concentration causes a change in the pH, thus resulting in an inaccurate calibration.
- Buffers have limited shelf lives. Do not use a buffer if the expiration date has passed. Store buffers at controlled room temperatures.
- Do not reuse buffer solutions. Protect buffers from excessive exposure to air. Exposure to air can cause changes in the pH of the buffer solution.
- Always rinse the sensor with DI water and remove excess water by dabbing with a clean tissue before placing it in a buffer. Only dab the sensor and do not wipe it. Wiping the sensor builds static charge which alters the reading.

7.1.3 Auto-calibrate

Prerequisites

Ensure that auto-calibration is turned ON and the appropriate buffers are used.

Procedure

1. Press **CAL** on the IRC to enter the ***CALIBRATE*** menu.

The *CALIBRATE* sub-menu appears.

2. At the *CALIBRATE* sub-menu, press **ENTER**.
   The `CAL bF1` prompt appears.
3. Rinse the sensor and place it in the first buffer. Be sure the glass bulb and the temperature element are completely submerged. Keep the sensor at least 3 in. below the liquid level. Do not rest the sensor on the glass bulb. Dislodge any trapped bubbles by swirling the sensor body.
4. Press **ENTER**.
   `BF1` flashes until the measured pH meets the programmed stability limits. If the pH reading is not relatively stable after 20 minutes, the transmitter automatically leaves the *CALIBRATE* menu and returns to the main display. If this occurs, consult Diagnostics and troubleshooting for assistance. Once the reading is stable, the display moves forward by showing a flashing number with the nominal pH.
5. Change the value by using the up and down arrows until the correct pH of the buffer solution appears. Press **ENTER** to save the first calibration point.
   `CAL BF2` appears.
6. Remove the sensor from the first buffer.
7. Rinse the sensor and place it in the second buffer solution. Again, make sure the bulb is completely submerged and the bubbles are dislodged by swirling the sensor body.
8. Press **ENTER**.
   `BF2` flashes until the reading is stable.
9. Repeat steps Step 4 and Step 5.
   The calibration is now complete, but the transmitter remains in the *CALIBRATE* sub-menu for two minutes after you press **ENTER**.
10. Remove the sensor from the buffer and reinstall it into the process stream. If the HOLD feature was used, be sure to turn off HOLD.

    The sensor will not calibrate if the electrode slope (calculated by the transmitter during calibration) is unacceptable. The transmitter displays a `SLOPE ERR HI` or `SLOPE ERR LO` error message. Refer to Diagnostics and troubleshooting for assistance.

Note
To display the electrode slope, press **CAL** on the IRC. The *CALIBRATE* sub-menu appears. Press **NEXT**. The *STD* sub-menu appears. Press **ENTER**. The `STD` prompt appears. Press **ENTER** again, and the slope appears on the display. For a good sensor, the slope is generally 50 to 60 mV.

7.1.4 Calibrate manually

Prerequisites

Ensure that auto-calibration is OFF and the appropriate buffers are used.

Procedure

1. Press **CAL** on the IRC to enter the *CALIBRATE* menu.

The *CALIBRATE* sub-menu appears.

2. At the *CALIBRATE* sub-menu, press **ENTER**.
   The `CAL BF1` prompt appears.
3. Rinse the sensor with DI water and place it in the first buffer along with a calibrated thermometer. Submerge the sensor tip at least 3 in. (76 mm) below the liquid level. Do not rest the sensor on the glass bulb. Dislodge any trapped bubbles by swirling the sensor body.
4. Once the pH reading and temperature are relatively stable, press **ENTER**. Use the editing keys to change the flashing display to the appropriate pH of the buffer solution. Press **ENTER** to save the value as buffer BF1.
   The transmitter expects a reading to be entered within 20 minutes after the `CAL BF1` prompt. If you do not press **ENTER**, the transmitter exits the *CALIBRATE* menu and returns to the process mode.
5. At the `CALBF2` prompt, remove the sensor from the first buffer. Repeat steps Step 3 and Step 4.
   The calibration is now complete, but the transmitter remains in the *CALIBRATE* sub-menu for two minutes after you press **ENTER**.
6. Remove the sensor from the buffer and reinstall it into the process stream. If the HOLD feature was turned on, be sure to turn off HOLD.

   The sensor will not calibrate if the electrode slope (calculated by the transmitter during calibration) is unacceptable. The transmitter displays a SLOPE ERR HI or SLOPE ERR LO error message. Refer to Diagnostics and troubleshooting for assistance.

Note
To display the electrode slope, press **CAL** on the IRC. The *CALIBRATE* sub-menu appears. Press **NEXT**. The *STD* sub-menu appears. Press **ENTER**. The `STD` prompt appears. Press **ENTER** again, and the slope appears on the display. For a good sensor, the slope is generally 50 to 60 mV.

7.1.5 Standardize for pH

Use standardization to match the transmitter values with those of another transmitter. The transmitter converts the difference between the two pH values into an equivalent voltage, called the reference offset.

Note
If a sensor that has been calibrated with buffers is standardized, then placing it back in the buffer will show a different measured pH than that of the buffer due to the standardization offset.

Procedure

1. Press **CAL** on the IRC to enter the *CALIBRATE* menu.
   The *CALIBRATE* submenu appears.
2. At the *CALIBRATE* submenu, press **NEXT**.
   The *STD* submenu appears.
3. Press **ENTER** to enter the STD prompt.

The process pH and temperature should be relatively stable.

4. Take a grab sample from the process stream as close to the pH sensor as possible.
   This transmitter reading is called the pH_trans.
5. Measure the pH of the sample (pH_std) using the second pH meter.
6. Note the current process reading (pH_curr). Calculate the corrected reading from the equation: ph_corr = ph_curr + (pH_std - pH_trans)
   - pH_corr = corrected pH value
   - pH_curr = current pH value
   - pH_std = standard instrument's pH value
   - pH_trans = measured sample's pH value
7. Use the editing keys to enter the pH_corr value calculated using the equation above. Press **ENTER** to save the value.
   If the corrected value is acceptable, then the display shows the slope (current electrode slope).
8. If the slope is acceptable, press **EXIT**. If the slope is unacceptable, use the editing keys to change it. Then press **ENTER**.
9. To leave the *CALIBRATE* menu, press **EXIT**.

7.2 Calibrating oxidation reduction potential (ORP) sensors

7.2.1 Oxidation reduction potential (ORP) overview

ORP is a function of temperature. The accuracy of a sensor/transmitter loop is about ±1 °C. A new sensor does not need to be calibrated often. Only calibrate the loop when:

1. ±1 °C is not acceptable.
2. You suspect an error in temperature measurement

7.2.2 Calibrate temperature with an oxidation reduction potential (ORP) sensor

Procedure

1. Place the ORP sensor and a reference thermometer in an insulated container of water at ambient temperature. Keep the sensor submerged at least 3 in. (76 mm) below the water level. Stir continuously and wait at least 20 minutes for the water, sensor, and thermometer to reach a constant temperature.
2. Press **CAL** on the IRC to enter the *CALIBRATE* menu.
   The *STD* submenu appears.
3. At the *STD* submenu, press **NEXT**.
   The *TEMP ADJ* submenu appears.

4. Press **ENTER** to display the temperature editing prompt.
5. Compare the temperature displayed by the transmitter with the temperature measured by the reference thermometer. If there is a discrepancy between the two values, use the editing keys to change the measured value to that of the thermometer.

Note
The reading cannot be changed more than 15 °C.

6. Press **ENTER**.
   The transmitter saves the value, and the display returns to the ***TEMP ADJ*** submenu.
7. Press **EXIT** to leave the ***CALIBRATE*** menu.
8. Check for linearity by measuring the temperature of water: -10 to -15 °C and +10 to +15 °C than the water used for calibration.

7.2.3 Standardize with an oxidation reduction potential (ORP) sensor

ASTM d 1498-93 gives procedures for making iron (ii) - iron (iii) and quinhydrone ORP standards. Emerson recommends the iron (ii) - iron (iii) standard. It is fairly easy to make and has a shelf life of approximately one year; in contrast, quinhydrone standards contain toxic quinhydrone and have only an eight hour shelf life. Iron (ii) - iron (iii) standard is available from Rosemount™ as PN R508-16OZ. The ORP of the standard solution measured against a silver-silver chloride reference electrode is 476 ± 20 mV at 77 °F (25 °C).

Procedure

1. Press **CAL** on the IRC to enter the ***CALIBRATE*** menu.
   The ***STD*** submenu appears.
2. Rinse the sensor with DI water and place it in the ORP standard with a reference thermometer. Ensure that the ORP sensor is submerged at least 3 in. (76 mm) below the water level.
3. Once the temperature and ORP readings are stable, press **ENTER**.
4. Use the editing keys to change the flashing display to the desired ORP reading. Press **ENTER** to save.
5. Press **EXIT** to return to the main display.

7.2.4 Match transmitter to oxidation reduction potential (ORP) sensor's temperature element

Procedure

1. Press **PROG** on the IRC.
2. Press **NEXT** until the ***TEMP*** submenu appears in the display. Press **ENTER**.
3. Press **EXIT** to return to the main display.

7.3 Calibrating contacting and toroidal conductivity sensors

7.3.1 Overview of calibrating contacting conductivity sensors

Contacting conductivity sensors do not require frequent calibrations. The sensors are ready to be installed right out of the box.

7.3.2 Calibrate contacting conductivity sensors

Procedure

1. Pres **CAL** on the IRC. Press **ENTER**.
   The *CALIBRATE* submenu appears.
2. Place the sensor in a standard solution of known conductivity and allow the measurement reading to become relatively stable.
3. Press **ENTER** to access the CAL segment with the flashing prompt.
4. Use the IRC editing keys to enter the conductivity value of the standard solution. Press **ENTER**.
5. Press **EXIT** to return to the main display.

7.3.3 Zero the sensor

Procedure

1. Press **CAL** and then **NEXT** to enter the *SENSOR 0* menu.
2. Press **ENTER** to access the *SENSOR 0* submenu.
3. Hold the sensor in the air and press **ENTER** again to zero the sensor.
4. Press **EXIT** to return to the *SENSOR 0* submenu.

7.3.4 Adjust temperature

Procedure

1. Press **CAL** and then **NEXT** until you see `TEMP`.
2. Press **ENTER**.
   The *TEMP* submenu appears.
3. Place the sensor in any solution of known temperature. Allow the temperature of the sensor to become relatively stable.
4. Use the editing keys of the IRC to change the values as needed.
5. Press **ENTER** to standardize the temperature reading and return to the *TEMP ADJ* screen.
6. Press **EXIT** to return to the main display.

7.3.5 Calibrate in-process

Procedure

1. Press **CAL** and then **NEXT** three times to access MTR CAL.
2. Use the IRC to go through the on-screen prompts.
3. Press **EXIT** to return to the main display.

7.3.6 Calibrate temperature slope

Procedure

1. From the *CAL* menu, press **NEXT** until `TEMP SLOPE` displays.
2. Use the IRC arrow keys to enter the slope. Press **ENTER** to register the slope in the memory of the transmitter. Press **EXIT** to return to the main screen.
3. If you don't know the temperature slope of the process, then refer to the below guide:
   - Acids: 1.0 percent to 1.6 percent per °C
   - Bases: 1.8 percent to 2.2 percent per °C
   - Salts: 2.2 percent to 3.0 percent per °C
   - Water: 2.0 percent per °C
4. Press **ENTER** to proceed to the *T SLOPE* submenu with the flashing prompt. Use the IRC keys to generate the desired slope value. Press **ENTER**.
5. Press **EXIT** to return to the main screen.

7.3.7 Calibrate output

Procedure

1. Wire an accurate milliammeter as shown in Figure 7-1.

Figure 7-1: Milliammeter Wiring

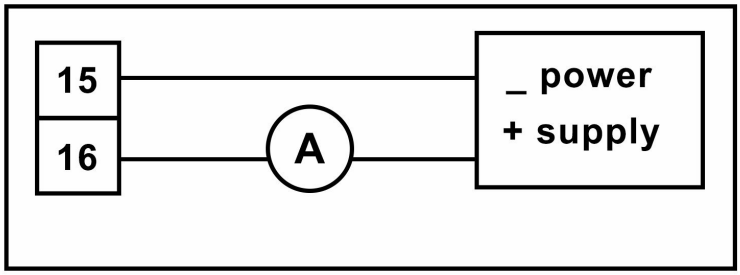

2. Press **CAL** on the IRC.
3. Press **NEXT** until the *OUTPUT CAL* submenu appears. Press **ENTER**.

4. Use the arrow keys to change the display to match the reading from the milliammeter. Press **ENTER**.
5. Press **RESET** to return to the main display.

7.4 Calibrating dissolved oxygen, ozone, free chlorine, total chlorine, and ozone sensors

7.4.1 Calibrating amperometric sensors

You can calibrate amperometric sensors in multiple ways: zeroing, air calibrations, dual slope calibrations, and in process calibrations.

7.4.2 Zero the sensor

Procedure

1. Place the sensor in a solution of 5% sodium sulfite (Na_2SO_3) in water. Ensure that air bubbles are not trapped against the membrane.
2. Go to the main display; press **DIAG** and then **NEXT**.
   The `SENSOR CUR` prompt appears.
3. Press **ENTER** to view the sensor current. Make sure the sensor reaches its zero current.

   This may require several hours. Do not start the zero routine until the sensor has been in zero solution for at least two hours.
4. Press **CAL** on the IRC.
   The `SENSOR 0` prompt appears.
5. Press **ENTER**.
   The screen shows the appropriate value correlating to the zero value. The screen shows `0.02`. The reading must be below 0.02 ppm for the zero calibration to be accepted.
6. To change the zero limit, use the editing keys and then press **ENTER**.
   The `TIME DELAY` message appears and remains until the zero current is below the concentration limit. If the current is already below the limit, `TIME DELAY` will not appear.
7. To bypass the time delay, press **ENTER**.
   When the procedure is complete, `0 DONE` appears.
8. Press **EXIT**.
9. Press **RESET** to return to the main display.

7.4.3 Calibrate in air (dissolved oxygen)

Procedure

1. Remove the sensor from the process liquid. Use a soft tissue and a wash bottle to clean the membrane. Dry it by blotting.
   The membrane must be completely dry during air calibration.
2. Pour some water into a beaker and suspend the sensor with the membrane approximately ½ in. (approximately 1 cm) above the water surface.
   Keep the sensor out of direct sunlight.
3. Monitor the dissolved oxygen and temperature reading. Once the readings are relatively stable, begin the calibration.
   It may take 10 - 15 minutes for the sensor reading in the air to stabilize.
4. Press **CAL** on the IRC.
5. Press **NEXT**.
   The *SENSOR CAL* submenu appears.
6. Press **ENTER**.
   The `AIR CAL` prompt appears.
7. Press **ENTER**.
8. Select the units. Then press **NEXT**.
9. Use the arrow keys to enter the barometric pressure. Press **ENTER** when done.
   The `TIME DELAY` message appears and remains until the sensor reading is relatively stable.
10. To bypass the time delay, press **ENTER**.
    `CAL DONE` appears when the calibration is complete.
11. Press **EXIT**.
12. To return to the main display, press **RESET**.

7.4.4 Calibrate in process (dissolved oxygen)

You can calibrate the sensor against a standard instrument.

Procedure

1. Press **CAL** on the IRC.
2. Press **NEXT**.
   The *SENSOR CAL* submenu appears.
3. Press **ENTER**.
4. Press **NEXT**.
   The `AIR CAL` prompt appears.
5. Press **NEXT**.
   The `INPROCESS` prompt appears.
6. Press **ENTER**.

The TIME DELAY message appears and will remain until the sensor is relatively stable. To bypass the time delay, press **ENTER**. The GRAP SPL message appears.

7. Press **ENTER**.
8. Use the arrow keys to change the flashing display to the value indicated by the standards instrument. Press **ENTER**.
9. Press **RESET** to return to the main display.

7.4.5 Calibrate full scale (free chlorine, total chlorine, ozone)

Procedure

1. Place the sensor in the process liquid. Ensure that the pH sensor is calibrated or the pH value is entered in case of manual pH correction, if applicable.
2. Adjust the chlorine concentration until it is near the upper end of the control range. Wait until the reading is relatively stable before starting the calibration.
3. Press **CAL** on the IRC.
4. Press **NEXT**.
   The *SENSOR CAL* submenu appears.
5. Press **ENTER**.
   The TIME DELAY message appears and will remain until the sensor reading is relatively stable. To bypass the time delay, press **ENTER**. The GRAB SPL prompt appears.
6. Take a sample of the process liquid and determine the concentration of chlorine in the sample. Press **ENTER**.
7. Press **RESET** to return to the main display.

7.4.6 Calibrate dual slope (free chlorine, total chlorine)

Procedure

1. Zero the sensor.
2. Place the sensor in the process liquid. Ensure that the pH sensor is calibrated or the pH valve is entered in case of manual pH correction, if applicable.
3. Press **CAL** on the IRC. Press **NEXT**.
   The *SENSOR CAL* prompt appears.
4. Press **ENTER**.
   The CAL PT1 prompt appears.
5. Adjust the chlorine concentration until it is near the upper end of the linear range of the sensor. Press **NEXT**.
   The TIME DELAY message appears and will remain until the sensor reading is relatively stable. To bypass the time delay, press **ENTER**. The GRAB SPL prompt appears.
6. Take a sample of the process liquid and determine the concentration of chlorine in the sample.
7. Press **ENTER**.

The PT1 prompt appears.

8. Use the arrow keys to change the flashing display to the concentration of chlorine determined in the grab sample. Press **ENTER** to save.
   The CAL PT2 prompt appears.
9. Adjust the concentration of chlorine until it is near the top end of the range. Press **ENTER**.
   The TIME DELAY message appears and will remain until the sensor reading is relatively stable. To bypass the time delay, press **ENTER**. The GRAB SPL prompt appears.
10. Take the sample of the process liquid and determine the concentration of chlorine in the sample.
11. Press **ENTER**.
    The PT2 prompt appears.
12. Use the arrow keys to change the flashing display to the concentration of chlorine determined in the grab sample. Press **ENTER** to save.
13. Press **RESET** to return to the main display.

8 Diagnostics and troubleshooting

8.1 Warning and fault messages

The Rosemount™ 5081 transmitter continuously monitors the measurement loop (sensor and transmitter) for conditions that cause inaccurate measurements. When a problem occurs, the transmitter displays either a warning or fault message. A warning alerts you that a potentially system disabling condition exists. If you don't fix the problem, there is a high probability that the measurement will be incorrect. A fault alerts you that a system disabling condition exists. If a fault message is showing, regard all measurements as incorrect.

When a warning condition exists:

1. The main display remains stable; it does not flash.
2. A warning message appears alternately with the temperature display. See Figure 8-1. See Troubleshooting when a diagnostic message is showing for an explanation of the different warnings and suggested ways of correcting the problem.

Figure 8-1: Warning Annunciation

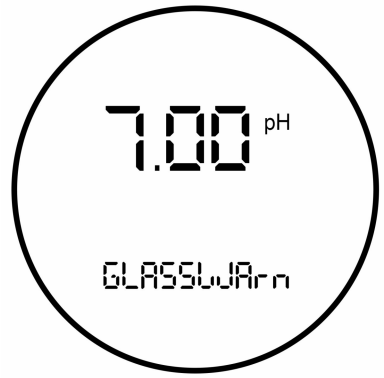

When a Fault exists:

1. The main display flashes.
2. The words FAULT and HOLD appear in the main display.
3. A fault message appears alternately with the temperature/output display. See Figure 8-2. See Troubleshooting when a diagnostic message is showing for an explanation of the different fault messages and suggested ways of correcting the problem.
4. The output current will remain at the present value or go to the programmed fault value.
5. If the transmitter is in Hold when the fault occurs, the output remains at the programmed hold value. To alert you that a fault exists, the word FAULT appears in the main display, and the display flashes. A fault or diagnostic message also appears.

6. If the transmitter is simulating an output current when the fault occurs, the transmitter continues to generate the simulated current. To alert you that a fault exists, the word `FAULT` appears in the display, and the display flashes.

Figure 8-2: Fault Annunciation



When a a fault occurs, the display appears as pictured above. To further alert you that measurements are in error, the display flashes. Diagnostic messages appear in the temperature/output area on the screen.

8.2 pH/ORP diagnostics and troubleshooting

8.2.1 Calibration errors

If an error occurs during calibration, an error message appears in the main display and the transmitter does not update the calibration. The calibration errors are `Std Err`, `SLOPE Err LO`, and `SLOPE Err HI`. See Troubleshooting when a diagnostic message is showing for an explanation of the error messages and suggested ways of correcting the problem.

8.2.2 General troubleshooting

Procedure

1. Look for a diagnostic message on the display to help identify the problem.

   Refer to Troubleshooting when a diagnostic message is showing for an explanation of the message and a list of the possible problems that triggered it.
2. Refer to Troubleshooting when no diagnostic message is showing for common measurement problems and the recommended actions to resolve them.
3. Follow the step-by-step troubleshooting approach, offered in Displaying diagnostic variables, to diagnose and correct less common or more complex problems.

8.2.3 Troubleshooting when a diagnostic message is showing

The Rosemount 5081-P pH/ORP transmitter continuously monitors the measurement loop (sensor and transmitter) for problems. If a problem is detected, the transmitter

displays a fault or error message. The message appears in the temperature/output area of the main display. The table lists each diagnostic message and the section to consult for help.

Message	Section
GLASSFAIL	GLASSFAIL
GLASSWArn	GLASSWArn
rEF FAIL	rEF FAIL
rEF WArn	rEF WARn
CALIbrAtE	CALIbrAtE
tEMP HI	tEMP HI and tEMP LO
tEMP LO	tEMP HI and tEMP LO
LInE FAIL	LinE FAIL
InPUt WArn	InPUt WArn
SLOPE Err LO	SLOPE Err LO
SLOPE Err HI	SLOPE Err HI
Std Err	Std Err
rOM FAIL	rOM FAIL or CPU FAIL
CPU FAIL	rOM FAIL or CPU FAIL
AdC WArn	AdC WArn or CyCLE PWr
CyCLE PWr	AdC WArn or CyCLE PWr
WrItE Err	WritE Err
FACt FAIL	FACt FAIL

GLASSFAIL

`GLASSFAIL` is an electrode fault message. It means the glass impedance is outside the programmed Glass Fault High (GFH) or Glass Fault Low (GFL) limit. Glass Fault High suggests the electrode is aging or the electrode is not immersed in the process liquid. Glass Fault Low implies that the pH sensitive glass is cracked. `GLASSFAIL` also appears if inappropriate limits have been entered into the transmitter.

If the measurement system was previously commissioned and operating correctly, `GLASSFAIL` likely means a real problem exists. However, if the system is being started up or if the advanced diagnostic feature is being used for the first time, `GLASSFAIL` could be caused by a miswired sensor or by programmed limits that are not correct for the sensor.

Note
`GLASSFAIL` is a sensor diagnostic message. Sensor diagnostic messages are optional. They can be turned off.

Recommended actions

1. Be sure the sensor is completely immersed in the process liquid.

If the diagnostic message disappears, the sensor is in good condition.

If the diagnostic message remains, go to Step 2.

2. Measure the glass impedance. See Testing the transmitter by simulating the pH for the procedure. Note the reading.

   If the glass impedance is low (< 40 megohms)...

   a. Check preamp location in program menus (PAMP = _____).
      - If the location is incorrect, go to 2.b.
      - If after selecting the correct location of Preamp in the Program menu, the glass impedance is still low, go to Step b.

   b. Calibrate the sensor.
      - If the sensor calibrates properly...
        1. The sensor is in good condition, but the Glass Fail Low (GFL) limit is set too high.
        2. Lower the GFL limit to about 10 megohms below the glass impedance value (GIMP).
        3. If the Glass Warning Low (GWL) message was also flashing, lower the limit from its former value by the same amount the GFL was lowered from its former value.
      - If the sensor cannot be calibrated, the pH glass membrane is likely cracked and the sensor must be replaced. The crack in the glass may not be visible or may be difficult to see.

   If the glass impedance is high (> 800 megohms)...

   a. Check that the sensor is correctly wired to the transmitter. Pay particular attention to the following:
      1. For Rosemount PLUS (+) and TUpH sensors with integral preamplifiers, the blue solution ground wire must be attached to TB-8 (SOL GND), and the gray reference in wire must be attached to TB-7 (REF IN).

         Note
         TB-8 means terminal 8 on the terminal board.

      2. If the sensor was wired with the blue solution ground wire unattached and a jumper between the terminals TB-8 and TB-7, remove the jumper and reattach the blue solution ground wire to TB-8. Keep the gray reference in wire attached to TB-7.
      3. For Rosemount PLUS (+) and TUpH sensors that do not have an integral preamplifier, attach the blue solution ground wire to TB-8 or, better, leave the blue wire unattached and jumper TB-7 to TB-8.
      4. If the sensor does not have a blue solution ground wire, jumper terminals TB-7 and TB-8.
         - If the wiring was correct and the glass impedance is still too high, go on to 2.b.

- If correcting wiring errors causes the diagnostic message to disappear, the sensor is in good condition.
- If after correcting wiring errors, the glass impedance is still high, go on to Step b.

b. Inspect and clean the sensor. After cleaning the sensor, calibrate it. Be sure to note the sensor slope.
   - If cleaning the sensor lowers the impedance below 800 megohms:
     1. The sensor is in good condition.
     2. Return the calibrated sensor to service.
   - If cleaning does not lower the glass impedance and the sensor can be calibrated:
     1. The sensor is probably in good condition; however, it may be nearing the end of its life. The electrode slope is a good indicator of remaining life.

Slope	Condition of sensor
54-60 mV/unit pH	Sensor is in good condition.
48-50 mV/unit pH	Sensor is nearing the end of its life. Once the slope drops below 48 mV/unit pH, the sensor can no longer be calibrated.

     2. The Glass Fail High (GFH) limit is probably set too low for the sensor. Set the GFH limit to about 150 megohms greater than the measured glass impedance.
     3. If the `GLASSWArn` message was also flashing, raise the GWH limit from its former value by the same amount the GFH was raised from its former value.
   - If cleaning does not lower the glass impedance and the sensor cannot be calibrated, the sensor has failed and should be replaced.

GLASSWArn

`GLASSWArn` is an electrode fault message. It means the glass impedance is outside the programmed Gas Warning High (GWH) or Glass Warning Low (GWL) limit. Ideally, when the measurement system exceeds the glass warning limits, you will have adequate time to diagnose and correct problems before a failure occurs. High impedance implies the electrode is aging or the sensor is not completely submerged in the process liquid. Low impedance suggests the pH sensitive glass is cracked. The message also appears if inappropriate limits have been entered into the transmitter.

If the measurement system was previously commissioned and operating correctly, `GLASSWArn` likely means a real problem exists. However, if the system is being started up or if the advanced diagnostic feature is being used for the first time, `GLASSWArn` could be caused by a miswired sensor or by programmed limits that are not correct for the sensor.

Note
GLASSWArn is a sensor diagnostic message. All sensor diagnostic messages are optional. They can be turned off.

Troubleshooting GLASSWArn problems is exactly the same procedure as troubleshooting GLASSFAIL problems. Refer to GLASSFAIL.

rEF FAIL

rEF FAIL is an electrode fault message. rEF FAIL means that the reference impedance exceeds the programmed reference high fault (RFH) limit. A plugged or dry reference junction is the usual cause of a high reference impedance. High reference impedance also occurs if the sensor is not submerged in the process liquid or if inappropriate limits have been entered into the transmitter.

If the operator previously commissioned the measurement system and it was operating correctly, rEF FAIL likely means a real problem exists. However, if the operator is just starting up the system or using the advanced diagnostic feature for the first time, rEF FAIL could be caused by a miswired sensor or by programmed limits that are not correct for the sensor.

Note
rEF FAIL is a sensor diagnostic message. All sensor diagnostic messages are optional. They can be turned off.

Recommended actions

1. Be sure the sensor is completely immersed in the process liquid.
   - If the diagnostic message disappears, the sensor is in good condition.
   - If the diagnostic message remains, go to Step 2.
2. Check that the sensor is properly wired to the transmitter. Be sure the reference in wire is attached to TB-7 and the solution ground wire is attached to TB-8.

   Note
   TB-8 means terminal 8 on the terminal board.

   - If correcting wiring problems makes the diagnostic message disappear, the sensor is in good condition.
   - If the wiring is correct and the message still remains, go to Step 3.
3. Measure and make a note of the reference impedance (rIMP). See Testing the transmitter by simulating the pH.
   - If the reference impedance is low (< 70 kilohms)...
     a. The reference electrode is in good condition. pH sensors manufactured by Rosemount use low impedance silver/silver chloride reference electrodes.
     b. The reference failure high (RFH) limit is probably set too low. Change the limit to a value about 50 kilohms greater than the measured reference impedance. If rEF WARN was also displayed, change the reference

warning high (RWH) limit to about 25 kilohms above the measured reference impedance.

- If the reference impedance is high (> 70 kilohms)...
  a. The sensor may be dirty, in which case cleaning it will lower the impedance. If the sensor is rebuildable, the reference electrolyte may be depleted. Finally, the sensor may be in good condition. The warning and failure limits are simply set too high.
  b. Inspect and clean the sensor. If the sensor is rebuildable, replace the reference junction and replenish the electrolyte solution. Refer to the sensor reference manual for details. Check the reference impedance again.
     — If cleaning the sensor reduces the impedance...
        1. The sensor is in good condition. Calibrate the sensor and return it to the process.
        2. Change the reference failure high (RFH) limit to a value about 50 kilohms greater than the measured reference impedance. If `rEF WARN` was also displayed, change the reference warning high (RWH) limit to about 25 kilohms above the measured reference impedance.
     — If cleaning does not reduce the impedance and the sensor is not rebuildable...
        1. Try the reference junction rejuvenation procedure. The rejuvenation procedure may not work. At best, it will get a little more life out of a sensor with a plugged reference.
        2. Whether or not the rejuvenation procedure worked, go to 3.c.
  c. Recalibrate the sensor using the autocalibration procedure.
     — If the sensor can be calibrated:
        1. The sensor is in good condition. Return it to the process.
        2. Change the reference failure high (RFH) limit to a value about 50 kilohms greater than the measured reference impedance. If `rEF WARN` was also displayed, change the reference warning high (RWH) limit to about 25 kilohms greater than the measured reference impedance.
     — If the sensor cannot be calibrated, the sensor has failed and must be replaced.

rEF WARn

`rEF WArn` is an electrode fault message. It means the reference electrode impedance exceeds the programmed reference warning high (RWH) limit. Ideally, when the measurement system exceeds the warning limits, you will have adequate time to diagnose and correct problems before a failure occurs. A high reference impedance implies that the liquid junction is plugged or the reference electrolyte is depleted. The message also appears if an inappropriate limit has been entered into the transmitter.

If the measurement system was previously commissioned and operating correctly, rEF WArn likely means a real problem exists. However, if the system is being started up or if the advanced diagnostic feature is being used for the first time, rEF WArn could be caused by a miswired sensor or by programmed limits that are not correct for the sensor.

Note
rEF WArn is a sensor diagnostic message. Sensor diagnostic messages are optional. They can be turned off.

Troubleshooting rEF WArn problems is exactly the same as troubleshooting rEF FAIL problems. Refer to rEF FAIL.

CALIbrAtE

CALIbrAte is a diagnostic intended for future use. If the CALIbrAte message is showing, disable CALIbrAte.

tEMP HI and tEMP LO

tEMP HI and tEMP LO mean the transmitter has detected a problem with the temperature measuring circuit. The problem may lie in the sensor, the cable, or the transmitter. The determination of temperature is an integral part of the pH measurement. Therefore, failure of the temperature measuring circuit is a system disabling condition. However, in an emergency, automatic temperature compensation can be disabled and the transmitter placed in manual temperature compensation. For manual temperature compensation, choose a temperature equal to the average temperature of the process. The resulting pH reading will be in error. The more variable the temperature and the further the pH from 7, the greater the error.

Recommended actions

1. Check wiring, jumper settings, and software settings.
   a. Check the wiring between the sensor and the transmitter. Pay particular attention to TB=3 (RTD RTN), TB-4 (RTD SN), and TB-5 (RTD RTN).

      Note
      TB-3 means terminal 3 on the terminal board.

   b. Be sure the software settings match the type of resistance temperature device (RTD) in the sensor.
      - If the diagnostic message disappears, the sensor is in good condition.
      - If the message persists, go to Step 2.

2. Check the sensor. Disconnect the RTD leads and measure the resistances shown in Figure 8-3.

   The measured resistance should agree with the value in Table 8-1 to within about one percent. If the measured resistance is appreciably different (between one and five percent) from the value shown, the operator can calibrate out the discrepancy.

Figure 8-3: Three-Wire RTD

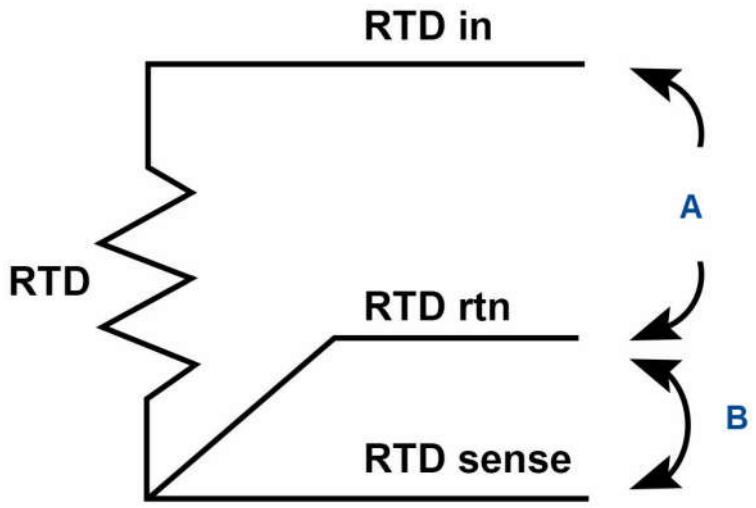

A. Compare resistance between these wires to the values in Table 8-1.
B. Resistance between these wires should be less than 2 ohms.

Consult Table 8-1 for resistance-temperature data. Lead resistance is about 0.05 ohm/ft at 77 °F (25 °C). Therefore, 15 feet of cable increases the resistance by about 1.5 ohm. The resistance between the RTD return and RTD sense leads should be less than 2 ohms.

Table 8-1: RTD Resistance Values

Temperature	Pt-100 resistance	Pt-1000 resistance
0 °C (32 °F)	100.0 ohms	1000 ohms
10 °C (50 °F)	103.9 ohms	1039 ohms
20 °C (68 °F)	107.8 ohms	1078 ohms
25 °C (77 °F)	109.6 ohms	1096 ohms
30 °C (86 °F)	111.7 ohms	1117 ohms
40 °C (104 °F)	115.5 ohms	1155 ohms
50 °C (122 °F)	119.4 ohms	1194 ohms
60 °C (140 °F)	123.2 ohms	1232 ohms
70 °C (158 °F)	127.1 ohms	1271 ohms
80 °C (176 °F)	130.9 ohms	1309 ohms
90 °C (194 °F)	134.7 ohms	1347 ohms
100 °C (212 °F)	138.5 ohms	1385 ohms

- If a connections is open or shorted and it should not be, the sensor has failed. Replace the sensor.

- If the measured resistances are acceptable, go to Step 3.

3. Check the transmitter. Disconnect the RTD sensor leads and wire the circuit shown in Figure 8-4. Set the resistance to the value for 25 °C (77 °F) shown in Table 8-1. The measured temperature should equal 25 °C (77 °F) within ±1 °C.

Figure 8-4: Temperature Simulation into the Rosemount 5081 pH/ORP Transmitter

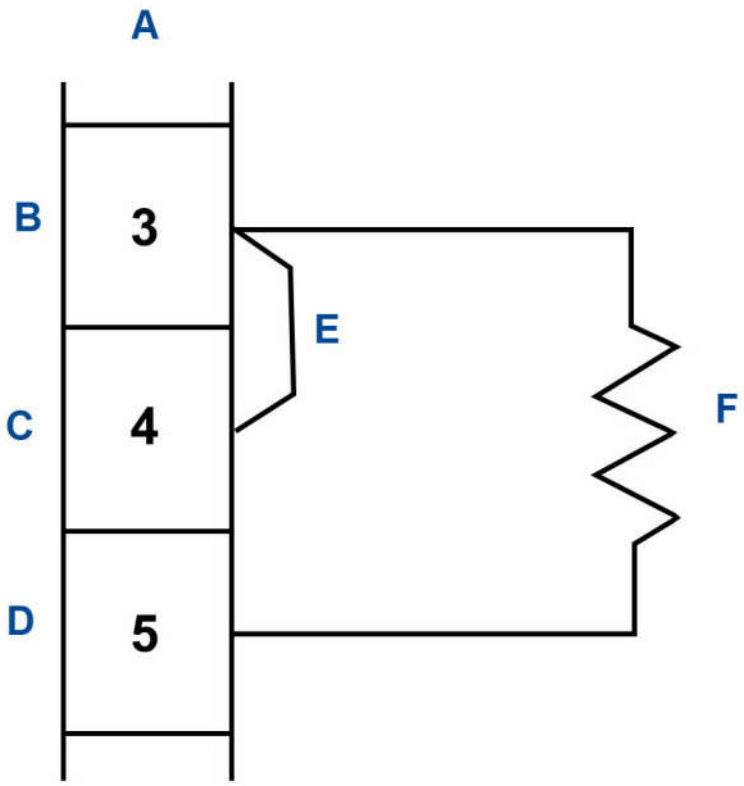

A. Terminal board
B. RTD return
C. RTD sense
D. RTD in
E. Jumper
F. Standard resistor(s) to stimulate RTD

- If the measured temperature is correct, the transmitter is working properly.
- If the measured temperature is incorrect, calibrate the transmitter against the standard resistance equivalent to 77 °F (25 °C). Change the resistance and verify that the temperature reading changes to the correct value.
  - If the transmitter works properly after temperature calibration, the original calibration was in error. Re-attach the RTD wires and check the temperature performance of the sensor.

— If the reading is still wrong, the transmitter electronics have failed. Replace the sensor board stack.

LinE FAIL

`LinE FAIL` almost always means the transmitter is measuring an incorrect distance between terminal TB-3 (resistance temperature device [RTD] return) and TB-4 (RTD sense). These terminals are critical connections for the three-wire RTD measurement. Figure 8-3 shows a three-wire RTD connection.

Recommended actions

1. Check for miswires and open connections at TB-3 and TB-4. Open connections can be caused by loose connections, poor spade crimps, or broken wires. Be sure the check junction boxes for proper pass through of all wires.
   - If correcting a wiring problem makes the message disappear, the system is in good condition.
   - If the message is still showing, go to Step 2.
2. The RTD sense or the RTD return wire inside the sensor cable may be broken. Keep the sensor wires attached and jumper TB-3 and TB-4.
   - If the diagnostic message disappears, either the RTD return or RTD sense wire is broken. To verify a broken wire, disconnect the leads and measure the resistance between them. Installing the jumper completes the circuit, but bypasses the three-wire function. The transmitter no longer corrects for changes in lead wire resistance with temperature. replace the sensor as soon as possible.
   - If the diagnostic message remains, go to Step 3.
3. The cable connecting the sensor to the transmitter may be too long. Test using a sensor with a shorter cable.
   - If shortening the cable eliminates the problem, move the transmitter closer to the sensor. It may also be possible to increase diameter of the RTD wires. Consult the factory for assistance.
   - If the diagnostic message remains, go to Step 4.
4. Check the temperature of the transmitter. Simulate both temperature and pH. See tEMP HI and tEMP LO (steps 2 and 3) for temperature simulation and Simulating inputs - pH for pH simulation.
   - If the transmitter fails either simulation, the electronic board stack should be replaced.
   - If the transmitter passes the simulations, the transmitter is not in good condition, and the sensor should be replaced.

InPUt WArn

`InPUt WArn` means that the input value or the calculated pH is outside the measurement range. The measured pH is less than -2 or greater than 16.

Recommended actions

1. Check for miswires and open connections, particularly at TB-10. Open connections can be caused by loose connections, poor spade crimps, or broken wires. Be sure to check junction boxes for proper pass through of all wires.
   - If correcting a wiring problem clears the message, the system is in good condition.
   - If the message is still showing, go to Step 2.
2. Check that the transmitter is working properly by simulating a pH input. See Testing the transmitter by simulating the pH.
   - If the transmitter does not respond to simulated inputs, replace the board stack.
   - If the transmitter performs satisfactorily and the preamplifier is located in a remote junction box or in a sensor-mounted junction box, go to Step 3.
   - If the transmitter performs properly and the preamplifier is located in the transmitter, the sensor has failed and should be replaced.
3. The problem may lie with the remote preamplifier or with the cable connecting the preamplifier and junction box to the transmitter.
   a) Be sure all wires between the junction box and transmitter are connected.
   b) Use Rosemount cable.
      Generic cable may not work.
   - If the disagnostic message clears, the interconnecting cable was the problem.
   - If the message remains, go to Step 4.
4. Confirm that the problem is with the remote preamplifier.
   a) Wire the pH sensor directly to the transmitter.
   b) Change the menu from PAMP=SnSr to trAnS for the test and return it to SnSr afterwards.
   - If the error message clears, the remote preamplifier is faulty. Replace the preamplifier.
   - If the error message remains, the sensor has failed. Replace the sensor.

SLOPE Err LO

`SLOPE Err LO` means that a two-point buffer calibration attempt has failed. The slope is too low (<40 mV/pH) for a good measurement.

Recommended actions

1. Repeat the calibration.
   a) Inaccurate buffers can cause a low slope. Repeat the calibration using fresh buffers. Alkaline buffers, pH 10 or greater, are particularly susceptible to changing value in air or with age. If you used a high pH buffer in the failed calibration, try a lower pH buffer when repeating the calibration. For example, use pH 4 and 7 buffer instead of pH 7 and 10 buffer.

b) Allow adequate time for readings in buffer to become constant. If the sensor was in a process substantially colder or hotter than the buffer, allow at least 20 minutes for readings in the buffer to stabilize. Alternatively, place the sensor in a container of water at ambient temperatures for 20 minutes before starting the calibration.

c) Be sure the correct buffer values are being entered during calibration.

- If the second calibration was successful, an error was made during the first attempt.
- If the second calibration fails, go to Step 2.

2. Check wiring. Connections to TB-10, TB-7, and TB-8 are particularly important. Recalibrate the sensor.
   - If the wiring was the only problem, the sensor should calibrate.
   - If the message persists, go to Step 3.
3. Inspect and clean the sensor. Recalibrate the sensor.
   - If the sensor was dirty, it should calibrate after cleaning.
   - If the message persists, go to Step 4.
4. Check for a faulty sensor.
   - If a spare sensor is available, connect it to the transmitter. Use the auto calibration procedure to calibrate the sensor.
     — If the new sensor cannot be calibrated, the transmitter is faulty. Go to Step 5.
     — If the new sensor can be calibrated, the old sensor has failed.
   - If a spare sensor is not available, measure the glass impendance (GIMP). See Testing the transmitter by simulating the pH.
     — If the glass impedance is less than about 20 megohms, the glass has cracked and the electrode must be replaced.
     — If the glass impedance is greater than about 20 megohms, the sensor is probably in good condition. Go to Step 5.
5. Check transmitter performance by simulating pH inputs. See Testing the transmitter by simulating the pH.
   - If the transmitter performs satisfactorily, go to Step 6.
   - If the transmitter does not respond to stimulated inputs, replace the board stack.
6. If the transmitter responds to simulated inputs, the problem must lie with the sensor or the interconnecting wiring. Verify the interconnecting wiring point to point. Fix or replace bad cable. If the cable is good, replace the pH sensor.

SLOPE Err HI

`SLOPE Err HI` means that a two-point buffer calibration attempt has failed. The slope is too high (> 62 mV/pH) for a good measurement.

Recommended actions

1. Repeat the calibration.
   a) Inaccurate buffers can cause a high slope. Repeat the calibration using fresh buffers. Alkaline buffers, pH 10 or greater, are particularly susceptible to changing value in air or with age. If you used a high pH buffer in the failed calibration, try a lower pH buffer when repeating the calibration. For example, use pH4 and 7 buffer instead of pH 7 and 10 buffer.
   b) Allow adequate time for readings in buffer to become constant. If the sensor was in a process substantially colder or hotter than the buffer, allow at least 20 minutes for readings in the buffer to stabilize. Alternatively, place the sensor in a container of water at ambient temperature for 20 minutes before starting the calibration.
   c) Be sure the correct buffer values are being entered during calibration. To minimize errors caused by entering the wrong buffer values, use the autocalibration procedure.
   d) Verify that the temperature reading is accurate. Compare the sensor reading against a thermometer known to be accurate. Recalibrate if necessary.

   - If the second calibration was successful, an error was made during the first attempt.
   - If the second calibration fails, go to Step 2.

2. There is a remote possibility of a problem with the autocalibration program. Repeat the calibration using the manual calibration procedure.
   - If manual calibration was successful when autocalibration failed, the problem might be with the sensor electronics. Call the factory for assistance.
   - If manual calibration is not possible, go to Step 3.

3. Check the transmitter performance by simulating pH inputs. See Testing the transmitter by simulating the pH.
   - If the transmitter performs satisfactorily, go to Step 4.
   - If the transmitter does not respond to stimulated inputs, replace the board stack.

4. If the transmitter responds to simulated inputs, the problem must lie with the sensor or the interconnecting wiring. Verify the interconnecting wiring point to point. Fix or replace bad cable. If cable is good, replace the pH sensor.

Std Err

`Std Err` means the reference electrode voltage has changed drastically. Typical causes are exposure to poisoning agents, sulfides or cyanides, or prolonged exposure to high temperature.

Troubleshooting depends on the type of sensor.

Recommended actions

1. If the sensor is rebuildable, replenish the electrolyte solution and replace the liquid junction. Calibrate the sensor.
   - If the sensor can be calibrated, the problem has been corrected.
   - If the sensor cannot be calibrated, replace the sensor. If the sensor has separate measuring and reference electrodes, replace only the reference electrode.
2. If the sensor is not rebuildable, try the reference electrode rejuvenation procedure.
   - If the rejuvenated sensor can be calibrated, the problem has been corrected.
   - If the sensor cannot be calibrated, replace the sensor.

rOM FAIL or CPU FAIL

`rOM FAIL` or `CPU FAIL` means the transmitter electronics have failed.

Recommended action

Replace the electronic board stack (PN 23992-02 [-HT] or PN 23992-03 [-HF]).

AdC WArn or CyCLE PWr

The `Adc WArn` or `CyCLE PWr` message appears momentarily when the transmitter has recognized an internal calculation problem. The transmitter repeats the calculation, and the message disappears once the calculation is successful. If the message is displayed constantly, the transmitter electronics may be faulty.

Recommended actions

1. Check transmitter performance by simulating pH inputs. See Testing the transmitter by simulating the pH.
   - If the transmitter performs satisfactorily, go to Step 2.
   - If the transmitter does not respond to simulated inputs, replace the board stack.
2. If the transmitter responds to simulated inputs, the problem must lie with the sensor or the interconnecting wiring. Verify the interconnecting wiring point to point. Fix or replace bad cable. If cable is good, replace the pH sensor.

WritE Err

`WriTE Err` means that jumper JP1 on the CPU board is not in place. If the sensor is not in place, the transmitter cannot be programmed or calibrated.

Recommended actions

1. Check the position of jumper JP1 on the CPU board. If the jumper is hanging off one of the pins, place it across both pins. If the jumper is missing entirely, use jumper JP3 (50/60 Hz), which is not a critical jumper.

   There are similar numbered jumpers on the analog board. The jumper to be checked is on the CPU board, which is the center board in the stack.
2. Turn the power to the transmitter off and then back on.

- Toggling the power should cause the message to disappear.
- If the message does not disappear, replace the electronic board stack.

FACt FAIL

`FACt FAIL` means the unit has not been factory calibrated. Call the factory. The transmitter will probably need to be returned to the factory for calibration.

8.2.4 Troubleshooting when no diagnostic message is showing

If no diagnostic message is showing, locate the symptom(s) in the table below and refer to the appropriate section for assistance.

Symptom	Section
`Id000` appears in display when trying to program or calibrate transmitter	Id000 in display
Error message flashing in display	Troubleshooting when a diagnostic message is showing
Transmitter does not respond to remote controller	Transmitter not responding to IRC
Calibration problems	
`SLOPE Err HI` or `SLOPE Err LO` appears after calibration attempt	SLOPE Err LO or SLOPE Err Hi appear after calibration attempt
`bF1` or `bF2` continuously flashes during auto calibration	bF1 or bF2 continuously flashes during autocalibration
pH reading in buffer drifts during manual calibration	pH reading in buffer drifts during manual calibration
Measurement problems	
Sensor does not respond to known pH changes	Sensor does not respond to known pH changes
Buffer calibration is acceptable; process pH is slightly different from expected value	Buffer calibration is acceptable; process pH is slightly different from expected value.
Buffer calibration is acceptable; process pH is grossly wrong and/or readings are noisy	Buffer calibration is acceptable; process pH is grossly different from expected value
Temperature reading is inaccurate	Temperature reading is inaccurate
Transmitter problems	
No display	No display
Display segments missing or display incorrect	Display segments missing
Transmitter locked up, all display segments lit	Transmitter locks up
Transmitter periodically restarts itself	Transmitter periodically restarts itself

Id000 in display

A security code has been programmed into the transmitter. The correct code must be entered before the transmitter can be programmed or calibrated.

Transmitter not responding to IRC

Recommended actions

1. Be sure the transmitter is receiving the signal.
   a) Clean the window in front of the IR detector.
      The detector is a small rectangle just above the main display.
   b) Hold the IRC at least 6 ft. (1.8 m) from the transmitter and not more than 15 degrees from the center.
   c) Hold the IRC closer (within 2 ft. [.6 m]) in case the batteries are getting weak.
2. If Step 1 fails, check the IRC.
   a) If a second transmitter is available, test the IRC on that transmitter. If a spare transmitter is not available, continue with Step b.
   b) The green LED, located just above and between the **RESET** and **HOLD** buttons, should light when a key is pressed. A piece of black rubber film may be covering the LED. Scrape the film away with your fingernail to expose the LED.
      The two clear LEDs on the front end of the IRC never light. They transmit the invisible IR signal.
   c) If the green LED does not light, the IRC is not working. Go to Step 3.
3. Take the IRC to a non-hazardous area and replace the two 1.5 Vdc AAA batteries.
   - If the green LED lights, but the transmitter still does not respond, go to Step 4.
   - If neither the LED lights nor the transmitter responds, replace the IRC.
4. Replace the transmitter display board.

SLOPE Err LO or SLOPE Err Hi appear after calibration attempt

Refer to SLOPE Err LO and SLOPE Err HI for assistance in solving calibration slope problems.

bF1 or bF2 continuously flashes during autocalibration

During autocalibration, `bF1` or `bF2` flashes until the pH reading of the sensor in the buffer is stable.

Recommended actions

1. Check the stability limits.
   If the stabilization range (prompt `PH`) is set too narrow or the stabilization time (prompt `tIME`) is set too long, the transmitter will not accept buffer readings. A good choice for `PH` is 0.02, and a good choice for `tIME` is 10 - 20 seconds.

2. Allow adequate time for the temperature of the sensor to reach the temperature of the buffer. If the sensor was in a process substantially hotter or colder than the buffer, allow at least 20 minutes for readings in the buffer to stabilize. Alternatively, place the sensor in a container of water at ambient temperature for 20 minutes before starting the calibration.
3. Be sure to swirl the sensor after placing it in each new buffer solution.
4. Finally, check the sensor. Verify that wiring is correct. Also, the sensor may be dirty or aged, or the reference junction may be depleted.
    a) Check that the sensor is properly wired to the transmitter.

       Pay particular attention to terminals TB-10 (mV in), TB-7 (reference), and TB-8 (solution ground).

    b) Clean the sensor.
    c) If the sensor is not rebuildable, rejuvenate the reference junction.
    d) If the sensor is rebuildable, replenish the reference electrolyte and replace the liquid junction.
    e) Replace the sensor.
       A clean pH sensor should not drift in buffer.

pH reading in buffer drifts during manual calibration

Recommended actions

1. Allow adequate time for the temperature of the sensor to reach the temperature of the buffer. If the sensor was in a process substantially hotter or colder than the buffer, allow at least 20 minutes for readings in the buffer to stabilize. Alternatively, place the sensor in a container of water at ambient temperature for 20 minutes before starting the calibration.
2. Be sure to swirl the sensor after placing it in each new buffer solution.
3. Finally, check the sensor. Verify that wiring is correct. Also, the sensor may be dirty or aged, or the reference junction may be depleted.
    a) Check that the sensor is properly wired to the transmitter.

       Pay particular attention to terminals TB-10 (mV in), TB-7 (reference), and TB-8 (solution ground).

    b) Clean the sensor.
    c) If the sensor is not rebuildable, rejuvenate the reference junction.
    d) If the sensor is rebuildable, replenish the reference electrolyte and replace the liquid junction.
    e) Replace the sensor.
       A clean pH sensor should not drift in buffer.

Sensor does not respond to known pH changes

Recommended actions

1. Verify that the change really happened. If you were checking pH response in buffers, recheck performance with fresh buffers. If a process pH reading was not what was expected, check the performance of the sensor in buffers. Also, use a second pH meter to verify that the expected change in the process pH really occurred.
2. Check the sensor. Verify that wiring is correct. Also, the sensor may be dirty or aged, or the reference junction may be depleted. Check that the sensor is properly wired to the transmitter.

   See Wire. Pay particular attention to terminals TB-10 (mv in), TB-7 (reference), and TB-8 (solution ground).
3. If a clean, properly wired sensor does not respond to pH changes, the glass bulb is probably broken or cracked.
   a) If a spare sensor is available, check the spare.
   If the spare sensor responds to pH changes, the old sensor has failed.

   If the spare sensor does not respond to pH changes, go to Step 4.

   b) If a spare sensor is not available, check the glass impedance (GIMP) of the existing sensor.
   If the impedance is less than about 20 megohm, the pH sensor is cracked. Replace the sensor.

   If the impedance is greater than about 20 megohm, go to Step 4.
4. Check transmitter performance by simulating pH inputs.

   See Testing the transmitter by simulating the pH.

   If the transmitter responds to simulated inputs, the problem must lie with the sensor or the interconnecting wiring. Verify the interconnecting wiring point to point. Fix or replace bad cable. If cable is good, replace pH sensor.

   If the transmitter does not respond to simulated inputs, replace the board stack.

Buffer calibration is acceptable; process pH is slightly different from expected value.

Differences between pH readings made with an on-line instrument and a laboratory or portable instrument are normal. The on-line instrument is subject to process variables (for example, ground potentials, stray voltages, and orientation effects) that do not affect the laboratory or portable instrument.

Buffer calibration is acceptable; process pH is grossly different from expected value

The systems suggest a ground loop (measurement system connected to earth ground at more than one point), a floating system (no earth ground), or noise being induced into the transmitter by a sensor cabling.

The problem arises from the process or installation. It is not a fault of the transmitter. The problem should disappear once the sensor is taken out of the system.

Recommended actions

1. To confirm a ground loop:
   a) Verify that the system works properly in buffers. Be sure there is no direct electrical connection between the buffer containers and the process liquid or piping.
   b) Strip back the ends of a heavy gauge wire. Connect one end of the wire to the process piping or place it in the process liquid. Place the other end of the wire in the container of buffer with the sensor.
      The wire makes an electrical connection between the process and sensor.

   If similar symptoms develop after making the connection, a ground loop exists. If no symptoms develop, a ground loop may or may not exist.
2. Check the grounding of the process.
   The measurement system needs one path to ground: through the process liquid and piping. Plastic piping, fiber glass tanks, and ungrounded or poorly grounded vessels do not provide a path. A floating system can pick up stray voltages from other electrical equipment.
   a) Ground the piping or tank to a local earth ground.
      Metal tees, grounding rings, or grounding rods may be required.
   b) If problems persist, connect a wire from the ground connection at the dc power supply to the transmitter case. Connect a second wire from the transmitter case to the process.
      These connections force the grounds to the same potential.

   If the problem persists, simple grounding is not the problem. The sensor wiring is probably carrying noise into the instrument. Go to Step 3.
3. Simplify the sensor wiring.
   a) Disconnect all sensor wires at the transmitter except: TB-4 (resistance temperature device [RTD] sense), TB-5 (RTD IN), TB-7 (Reference IN), and TB-10 (pH/ORP IN). If you are using a remote preamplifier, disconnect the wires at the input side of the junction box.
   b) Tape back the ends of the disconnected wires, including all shield and drain wires, to keep them from making accidental connections with other wires, terminals, or the transmitter case.
   c) Connect a jumper wire between TB-3 (RTD return) and TB-4 (RTD sense). Connect a second jumper wire between TB-7 (Reference IN) and TB-8 (Solution ground).
   d) Place the sensor back in the process liquid. If diagnostic measures such as `GLASSFAIL` or `REF WArn` appear, turn off the sensor diagnostics.

   If the symptoms disappear, interference was coming into the transmitter along one of the sensor wires. The measurement system can be operated permanently with simplified wiring.

If symptoms still persist, go to Step 4.

4. Check for extra ground connections or reduced noise.

   The electrode system is connected to earth ground through the process. If other ground connections exist, there are multiple paths and ground loops are present. Noise enters the measurement either by a direct connection, usually between the cable and grounded metal, or by an indirect connection, usually EMI/RFI picked up by the cable.

   a) If the sensor cable is run inside conduit, there may be a short between the cable and the conduit. Re-run the cable outside the conduit. If symptoms disappear, then a short exists between the table and the conduit. Likely a shield is exposed and is touching the conduit. Repair the cable and reinstall it in the conduit.

   b) To avoid induced noise in the sensor cable, run it as far away as possible from the power cables, relays, and electric motors. Keep sensor wiring out of crowded panels and cable trays.

   c) Occasionally, noise can travel into the transmitter housing from the metal it is mounted on. The noise is then radiated into the transmitter electronics. If isolating the transmitter from its metal mounting eliminates the symptoms, move the transmitter to a different location or mount it with isolating materials.

   If ground loop problems persist, consult the factory. It may require a visit from an experienced service technician to solve plant-induced problems.

Temperature reading is inaccurate

Recommended actions

1. To troubleshoot temperature problems, refer to tEMP HI and tEMP LO.
2. Calibrate the temperature response of the sensor.
3. If necessary, automatic temperature compensation can be temporarily disabled and the transmitter placed in manual temperature compensation. For manual temperature, choose a temperature equal to the average temperature of the process.
   The resulting pH reading will be in error. The more variable the temperature and the further from pH 7, the greater the error.

HART® communication problems

Recommended actions

1. If the handheld communicator software does not recognize the =transmitter, order an upgrade from Rosemount at 800 999 9307.
2. Be sure the HART load and voltage requirements are met.
   - HART communications requires a minimum 250 ohm load in the current loop.
   - Install a 250 - 500 ohm resistor in series with the current loop. Check the actual resistor value with an ohmmeter.

- For HART communications, the power supply voltage must be at least 18 Vdc.

3. Be sure the HART communicator is properly connected.
   - The communicator leads must be connected across the load.
   - The communicator can be connected across the power terminals (TB-15 and TB-16).
4. Verify that the handheld communicator is working correctly by testing it with another HART Smart device.
   If the communicator is working, the transmitter electronics may have failed. Call Rosemount for assistance.

   If the communicator seems to be malfunctioning, call Rosemount at 800 999 9307 for assistance.

No display

Recommended actions

1. Be sure power requirements are being met.
   a. The positive voltage lead must be connected to TB-16.
   b. Check dc voltage requirements and load restrictions.
2. Check for bad connections between the circuit boards. Be sure the ribbon cable between the display and CPU boards is firmly seated in the socket on the CPU board. Be sure the socket connection between the CPU and analog boards is firm.

Display segments missing

Recommended action

Replace the display board.

Transmitter locks up

Recommended actions

1. Turn the dc power off; then turn it back on.
2. If the problem persists, replace the electronic board stack (HART®: PN 23992-02; FOUNDATION™ Fieldbus: PN 23992-03).

Transmitter periodically restarts itself

Recommended actions

1. The problem is usually related to improperly wired resistance temperature device (RTD) input terminals.
   a) The RTD return wire must be connected to TB-3. The RTD sense wire must be connected to TB-4, and the RTD in wire must be connected to TB-5. If the pH sensor does not have an RTD, connect a jumper wire across the terminals TB-3 and TB-4 and a second jumper across TB-4 and TB-5.

b) If you have jumpered the RTD connections as described in 1.a, turn off automatic temperature compensation and operate the transmitter in manual temperature mode.

2. If RTD wiring is correct and problems still persist:
   a) Monitor the power supply. Be sure the power is not intermittent and the correct voltage is present.
   b) Try connecting the transmitter to a different power supply.

8.2.5 Displaying diagnostic variables

This section describes how to display the diagnostic variables listed below:

Diagnostic measurements

1. Sensor voltage in mv (`InPut`)
2. Glass impedance in megohms (`GIMP`)
3. Reference temperature in kilohms (`rIMP`)(1)
4. Temperature in °C

Diagnostic messages

1. Software version (`VEr`)
2. Display last three fault messages (`ShoW FLt`)

Note
Displays are read only.

Procedure

1. Press **DIAG** on the IRC to enter the ***Diagnostic*** menu.
   Sensor voltage in mV (`InPut`) appears.
2. Press **NEXT**.
   The temperature corrected glass impedance in megohms (`GIMP`) appears.
3. Press **NEXT**.
   The reference impedance (`rIMP`) appears. For conventional low impedance silver/silver chloride reference electrodes, the reference impedance has units of kilohms. For the rare occasions when a high impedance reference is used, the units are megohms.
4. Press **NEXT**.
   The model number and software version (`Ver`) appears.
5. Press **NEXT**.
   The temperature (`tEMP`) measured by the sensor appears.
6. Press **NEXT**.
   The ***ShoW Fit*** submenu appears.

(1) For high impedance reference electrodes, the reference impedance is in megohms.

7. Press **ENTER**.
   The most recent fault message appears in the display.
8. Press **NEXT** repeatedly to scroll through the stored messages.
   The transmitter only remembers the three most recent messages. `nonE` appears if there are no faults. Press **EXIT** to clear all the stored messages and return the transmitter to the ***ShoW Fit*** display. If the transmitter loses power, all stored warnings and fault messages are lost.
9. Press **EXIT** to return to the process display.

8.2.6 Testing the transmitter by simulating the pH

Overview of simulating a pH input

This section describes how to simulate a pH input into the Rosemount 5081-P pH/ORP transmitter. pH is directly proportionsl to voltage.

To simulate the pH measurement, connect a standard millivolt source to the transmitter. If the transmitter is working properly, it will accurately measure the input voltage and convert it to pH. Although the general procedure is the same, the wiring details depend on the location of the preamplifier. Consult the table to find the correct procedure.

Preamplifier located in	Section
Transmitter	Simulate pH when the preamplifier is located in the transmitter
Remote junction box	Simulate pH when the preamplifier is located in a remote junction box or in a sensor-mounted junction box
Sensor-mounted junction box	Simulate pH when the preamplifier is located in a remote junction box or in a sensor-mounted junction box
Sensor	Simulate pH when preamplifier is in sensor

Simulate pH when the preamplifier is located in the transmitter

Procedure

1. Program PAMP to transmitter.
2. Turn off sensor diagnostics.
3. Turn off automatic temperature compensation. Set manual temperature compensation to 77 °F (25 °C).
4. Disconnect the sensor and wire transmitter as shown in Figure 8-5.
5. Attach a jumper between TB-7 (Reference IN) and TB-10 (pH IN).
6. Measure the voltage. Press **DIAG** on the infrared remote control (IRC).
   The InPut voltage in millivolts appears in the temperature-output area. The main display continues to show pH. The measured voltage should be 0 mV, and the pH should be approximately 7. Because the calibration data in the transmitter may be offsetting the input voltage, the displayed pH may not be exactly 7.0. If the actual readings are close to expected, the transmitter is probably operating normally.

7. If a standard millivolt source is available, remove the jumper between TB-7 and TB-10 and connect the voltage source.
8. Calibrate the transmitter. Use 0.0 mV for pH 7 (bF1) and -177.4 mV for pH 10 (bF2). If the transmitter is working, it should accept the calibration.
9. To check linearity, leave autocalibration and return to the main display. Set the voltage source to the values in the table and verify that the pH reading matches the expected value.

Voltage (mV)	pH
295.8	2.00
118.3	5.00
-118.3	9.00
-295.8	12.00

Example

Figure 8-5: pH simulation when the preamplifier is located in the transmitter

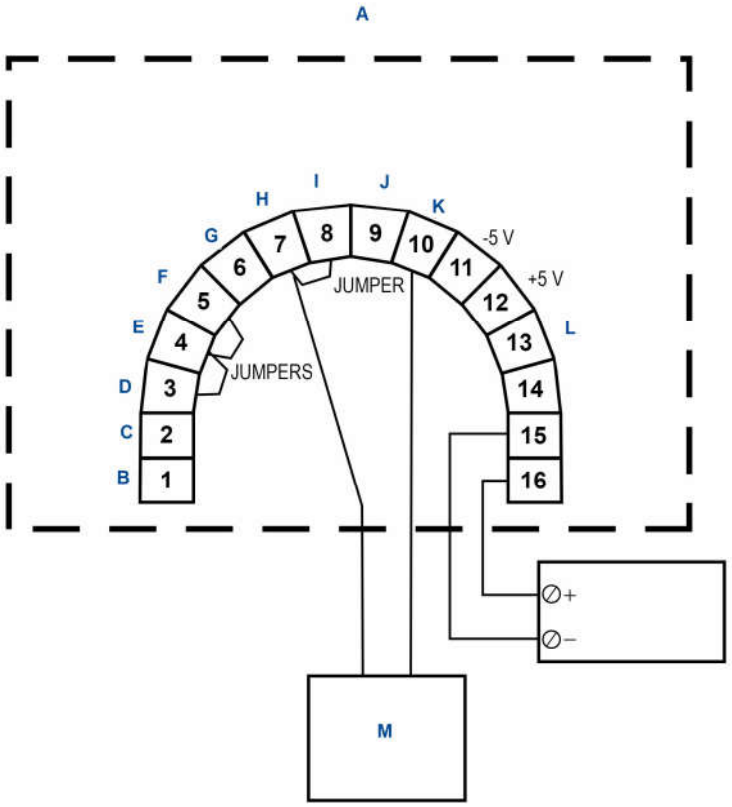

A. Transmitter
B. Earth ground
C. Shield
D. Resistance temperature device (RTD) return
E. -RTD sense
F. RTD in
G. Reference ground
H. Reference in
I. Solution ground
J. pH guard
K. pH in
L. +RTD sense
M. mV source

Simulate pH when the preamplifier is located in a remote junction box or in a sensor-mounted junction box

Procedure

1. Program PAMP to sensor.

2. Turn off sensor diagnostics.
3. Turn off automatic temperature compensation. Set manual temperature compensation to 77 °F (25 °C).
4. Disconnect the sensor and wire the sensor side of the junction box as shown in Figure 8-5. Leave the interconnecting cable between the junction box and transmitter in place.
5. Attach a jumper between TB1-7 (Reference IN) and TB1-10 (pH IN)
6. From this point on, continue with steps 6 through 9 in Simulate pH when the preamplifier is located in the transmitter.

   For testing using a standard millivolt source. Be sure to remove the jumper between TB1-7 and TB1-10 before connecting the standard millivolt source.

Example

Figure 8-6: pH simulation when the preamplifier is located in a remote junction box or in a sensor mounted junction box

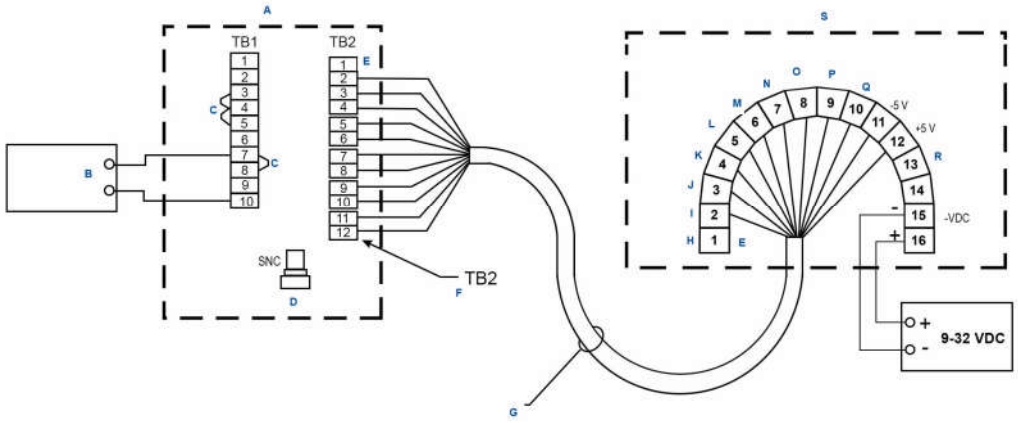

A. Remote junction box: PN 23555-00 (includes preamplifier). Board PN 23557-00
B. mV source
C. Jumpers
D. No connection
E. Normally closed
F. Far side
G. Extension cable point to point wiring terminals 2 to 12
H. Earth ground
I. Shield
J. Resistance temperature device (RTD) return
K. -RTD sense
L. RTD in
M. Reference ground
N. Solution ground
O. pH guard
P. pH in
Q. +RTD sense
R. Transmitter

Simulate pH when preamplifier is in sensor

The preamplifier in the sensor simply converts the high impedance signal into a low impedance signal without amplifying it.

8.3 Contacting and toroidal conductivity diagnostics and troubleshooting

8.3.1 Diagnose menu

The transmitter automatically monitors for fault conditions. The ***Diagnose*** menu displays current variable settings and fault messages. The messages are defined in Table 8-2.

Troubleshoot contacting conductivity analyzers

Procedure

1. Look for a diagnostic fault message on the display to help pinpoint the problem.
   Refer to Diagnostic messages for an explanation of the message recommended actions to solve it.
2. Refer to Troubleshooting when no diagnostic message is showing for common loop problems and the recommended actions to resolve them.

Display diagnostic values

Use the **DIAG** key on the IRC is used to access the ***Diagnose*** menu. The messages are defined in Table 8-2.

Use the ***FAuLtS*** submenu to show the last three faults/warnings. The most recent is displayed first. Use **NEXT** to scroll through the remaining faults. Press **EXIT** to clear all fault/warnings and returns the ***FAuLtS*** segment. Disconnecting the transmitter removes all fault messages from memory. The `nonE` message is displayed when no faults/warnings have occurred.

Table 8-2: Diagnostic variables mnemonics

AbS	Absolute conductivity (µS/cm or mS/cm)
0 A ir	Sensor zero in air
CELL ConSt	Sensor cell constant (used in C mode)
tSLOPE	Temperature slope in %/° C
CAL F	Calibration factor
SoFt	Software version
HArd	Hardware version
FAuLtS	Show fault messages
nonE	No fault messages in memory

8.3.2 Fault conditions

The diagnostic program detects and diffentiates three classes of error conditions/ problems. System disabling problems are faults caused by failures in the loop or significant variations in the process. System non-disabling problems are warnings and deal with input or A to D conversion settings. The third class of detection problems are error messages and occur when the calibration limits are exceeded.

Disabling faults

When a disabling fault occurs:

1. Both FAULT and HOLD annunciation fields become active (Figure 8-7).
2. The process variable flashes at the rate of 1 second on and 1 second off.
3. The appropriate fault message alternates with the normal Temperature/Current output display (see Figure 8-7).
4. The output current loop is forced to run the non-zero fault value last entered or held at last value if fault value = 0 if the transmitter is not in the TEST, HOLD, or Multidrop operational modes.
5. A 0-1 mA output signal is available for external use when system disability conditions are active. These conditions drive this output to 1 mA. Please contact factory for specific application information.

Figure 8-7: Disabling Fault Annunciation



Non-disabling warnings

When a non-system-disabling condition occurs, a warning message is displayed.

The process variable does not flash. The appropriate message alternates with the Temperature/Current output display (see Figure 8-8).

If more than one fault exists, the display will sequence through each diagnostic message. This will continue until the cause of the fault has been corrected.

Figure 8-8: Warning Annunciation

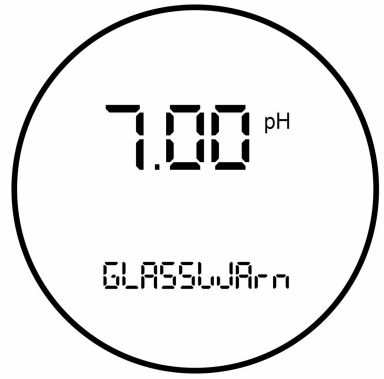

8.3.3 Diagnostic messages

The transmitter's diagnostics constantly monitor the conductivity loop for possible problems. If an operational problem is encountered, check the display for a fault or error message. These are displayed in the ***Temperature/Current output*** segment of the display. Note the message and refer to the following sections for a description of possible problems that may have triggered the diagnostic message.

Faults

tEmP LO

Temperature is too low.

Recommended actions

1. Check wiring or sensor/process temperature.
2. Check resistance temperature device (RTD).

tEmP HI

Temperature is too high.

Recommended actions

1. Check wiring or sensor/process temperature.
2. Check resistance temperature device (RTD).

rtd FAIL

The resistance temperature device (RTD) sensor line fault limits have been exceeded into the sensor.

Recommended action

Check wiring or check ***Program/Temp*** menu setting to verify the 100-3 or 100-4 sensor type connected.

CPU FAIL

The CPU has failed during RAM or EEPROM verification.

Recommended action

Recycle. If persistent, contact the factory.

FACt FAIL

`FACt FAIL` appears if the transmitter factory calibration message has been triggered.

A stray noise spike can cause this message to appear.

Recommended actions

1. If the pH reading seems acceptable, reset the calibration flag.
   a) Press **2** on the infrared remote control (IRC) ten times to enter the ***factory calibration*** menu.
   The display does not change.
   b) Press **3**.
   `FActorYCAL` appears in the display.
   c) Press **NEXT**.
   `rEPAir` appears in the display.
   d) Press **NEXT**.
   `ConFIG` appears in the display.
   e) Press **NEXT**.
   `rESEt` appears in the display.
   f) Press **NEXT**.
   `rESEtCFG` appears in the display.
   g) Press **ENTER**.
   `rESET` appears again.
   h) Press **NEXT**.
   `FActorYCAL` reappears.
   i) Press **ENTER**.
   `FactOn` appears in the display.
   j) Press **3**.
   `FactOFF` appears.
   k) Press **ENTER** to store the settings.
   l) Press **EXIT** repeatedly until the main display reappears.

   If the message does not clear or problems persist, the electronics have failed. Replace the electronic board stack.
2. Contact factory.

rOm FAIL

The PROM failed the check-sum test.

Recommended action

Contact factory.

CyCLE PoWr

A wrong value was detected during power-up.

Recommended action

Recycle the power.

SEnSor FAIL

Bad sensor means that the sensor current is a large negative number. `SEnSor FAIL` may appear for a while when the sensor is first placed in service.

Recommended actions

1. Observe the sensor. Go to SEnSor Cur under the ***Diagnostic*** menu.
   If the sensor is moving in the positive direction, there is probably nothing wrong. The error message should soon disappear.
2. Verify that wiring is correct. Pay particular attention to the anode and cathode connections.
3. Verify that the transmitter is configured for the correct measurment.

   Configuring the measurement sets several things, including the polarizing voltage. Applying the wrong polarizing voltage to the sensor can cause a negative current.
4. Replace the sensor membrane and electrolyte solution and clean the cathode if necessary.

   See the sensor reference manual for details.
5. Replace the sensor.

Warnings

InPUt WArn

`InPUt WArn` means that the input value or the calculated pH is outside the measurement range. The measured pH is less than -2 or greater than 16.

Recommended actions

1. Check for miswires and open connections, particularly at TB-10. Open connections can be caused by loose connections, poor spade crimps, or broken wires. Be sure to check junction boxes for proper pass through of all wires.
   - If correcting a wiring problem clears the message, the system is in good condition.
   - If the message is still showing, go to Step 2.
2. Check that the transmitter is working properly by simulating a pH input. See Testing the transmitter by simulating the pH.
   - If the transmitter does not respond to simulated inputs, replace the board stack.

- If the transmitter performs satisfactorily and the preamplifier is located in a remote junction box or in a sensor-mounted junction box, go to Step 3.
- If the transmitter performs properly and the preamplifier is located in the transmitter, the sensor has failed and should be replaced.

3. The problem may lie with the remote preamplifier or with the cable connecting the preamplifier and junction box to the transmitter.
   a) Be sure all wires between the junction box and transmitter are connected.
   b) Use Rosemount cable.
      Generic cable may not work.

- If the disagnostic message clears, the interconnecting cable was the problem.
- If the message remains, go to Step 4.

4. Confirm that the problem is with the remote preamplifier.
   a) Wire the pH sensor directly to the transmitter.
   b) Change the menu from PAMP=SnSr to trAnS for the test and return it to SnSr afterwards.

- If the error message clears, the remote preamplifier is faulty. Replace the preamplifier.
- If the error message remains, the sensor has failed. Replace the sensor.

OvEr rAnGE and AMP FAIL

The current range setting has been exceeded or the measurment exceeds the display limit.

This error message appears if the sensor current is too high. Normally, excessive sensor current implies that the sensor is miswired or the sensor has failed.

Recommended actions

1. Verify the 4 and 20 mA settings in the ***Program/output*** menu.
2. Verify that the wiring is correct and connections are tight. Be sure to check connections at the junction box if one is being used.
3. Replace the sensor membrane and electrolyte solution and clean the cathode if necessary.
   See the sensor reference manual for details.
4. Replace the sensor.

AdC Error

`AdC Error` means the analog to digital converter has failed.

Recommended actions

1. Verify that the sensor wiring is correct and connections are tight.
   Be sure to check connections at the junction box if one is being used.
2. Disconnect sensor(s) and simulate temperature and sensor input.

If the transmitter does not respond to simulated signals, the analog PCB has probably failed.

3. Recycle the power.
4. Call the factory for assistance.

nEEd 0 CAL

The message `nEEd 0 CAL` means that the concentration of the analyte is too negative.

Recommended actions

1. Check the zero current (go to `0 CurrEnt` under the ***Diagnose*** menu).
   If the zero current is appreciably greater than the measurement current, the `nEEd 0 CAL` warning appears.
2. Verify that the zero current is close to the value given in the calibration section for the analyte being determined.
3. Rezero the sensor.
   Refer to the calibration and troubleshooting sections of the sensor reference manual for more information.

Errors

CAl Err or OFFSEt Err

A calibration error has occurred between the standard and process.

Recommended action

Press **RESET** and repeat. Check calibration standards and unit configuration.

tSLOPE Err

The limit for T-2 in a two point calibration has been exceeded.

Recommended action

Press **RESET** and repeat the ***calibration/temp. slope*** menu setting.

-0- Err

Sensor zero limit has been exceeded.

Recommended actions

Press ***RESET*** and repeat the ***calibrate/sensor*** menu setting.

WritE Err

An attempt to write on the EEPROM has failed.

The jumper JP-1 on the CPU board has been removed.

SenSE OPEn

Most Rosemount sensors use a Pt100 or Pt1000 in a three-wire configuration. The in and return leads connect the resistance temperature device (RTD) to the measuring circuit in the transmitter. A third wire, called the sense line, is connected to the return lead. The

sense line allows the transmitter to correct for the resistance of the in and return leads and to correct for changes in lead wire resistance with changes in ambient temperature.

Recommended actions

1. Verify all wiring connections, including wiring in a junction box if one is being used.
2. Disconnect the RTD SENSE and RTD RETURN wires. Measure the resistance between the leads.

   It should be less than 5 Ω.
3. If the sense line is open, replace the sensor as soon as possible.

   The transmitter can be operated with the sense line open. The measurement will be less accurate, because the transmitter can no longer compensate for lead wire resistance. However, if using the sensor at approximately constant ambient temperatures, you can eliminate the lead wire resistance error by calibrating the sensor to the measurement temperature. Errors caused by changes in ambient temperature cannot be eliminated.
4. To make the error message disappear, connect the RTD SENSE and RETURN terminals with a jumper.

8.3.4 Troubleshooting when no diagnostic message is showing

The following sections identify some of the more common symptoms and suggest actions to help resolve a problem. In general, wiring is the most common cause.

Wrong temperature reading

Recommended actions

1. Perform a temperature standardization.
2. Verify sensor's resistance temperature device (RTD).

Suspected temperature compensation problem

Recommended action

Check wiring.

Display segments missing

Recommended action

Replace the display board.

Transmitter locks up

The transmitter won't respond

Recommended actions

1. Replace PCB stack.

2. Press **RESET**.
3. Check batteries in infrared remote control (IRC).

Erratic displays

Recommended action

Check sensors in process.

Transmitter won't respond to infrared remote control (IRC) key presses

Recommended actions

1. Verify and clean ribbon cable connection on CPU board.
2. Check batteries in IRC.

Key press gives wrong selection

Recommended actions

1. Replace infrared remote control (IRC).
2. Check ribbon cable connection on CPU board.

Wrong or no current output

Recommended actions

1. Verify that output is not being overloaded.
2. Remove load.
3. Replace PCB stack.

No display or indicators

Recommended action

Replace PCB stack.

Excess input

Recommended action

Check sensor wiring.

Reverse input

Recommended action

Perform sensor zero.

Check sensor zero

The transmitter will not zero.

Recommended action

Place the sensor in the air and access zero routine.

8.3.5 Troubleshoot in the field

When it is apparent by grab sample analysis that the transmitter is giving inaccurate readings, try the following:

Prerequisites

Make sure the sensor surfaces are totally wetted by the process and that air bubbles are not trapped in the vicinity of electrodes. If you find air bubbles, change the installation technique to eliminate air bubbles.

Procedure

1. Visually inspect the installation.
   a) Check that the transmitter is mounted securely and that its internal parts are properly connected.
   b) Check all input and output wiring.
2. If Step 1 did not indicate the source of the problem, isolate the problem to either the transmitter or the sensor.
3. To troubleshoot the sensor:
   a) Disconnect the sensor from the transmitter.
   b) Remove the sensor from the process.
   c) Thoroughly dry the sensor electrodes.

   Refer to the sensor reference manual for additional troubleshooting checks.
4. To troubleshoot the transmitter independently of the sensor, use an appropriate resistor across the temperature input connectors and connect the conductivity inputs to resistance decade box.

8.3.6 Troubleshoot conductivity measurement

If troubleshooting in the field does not resolve the error, try the following procedure to troubleshoot a conductivity measurement problem in the process.

Note
Before starting this procedure, make sure that all wiring is correct.

Procedure

1. Remove the sensor from process and place the sensor in air. Zero the transmitter.
   This step is for normal contacting only, not for low conductivity or resistivity.
   If the transmitter zeros correctly, place the sensor in the process and standardize.
2. If the transmitter does not zero correctly:
   a) Check diagnostic messages.
      Refer to Diagnostic messages.

b) Check wiring for short.

c) Consult service center.

3. If the sensor does not standardize:
   a) Remove the sensor from the process and test it in a known conductivity solution or against a certified conductivity instrument.
   b) Check for ground loops and/or improper installation.

8.3.7 Resistance temperature device (RTD) resistance values

Table 8-3 is a ready reference of RTD resistance values at various temperatures. Use these values to test and evaluate the sensor.

Note
Resistance values are read across the RTD element and are based on the manufacturer's stated values (±1%). Allow enough time for the RTD element in the sensor to stabilize to the surrounding temperature.

Table 8-3: RTD Resistance Values

Temperature	Pt-100 resistance (ohms)	Pt-1000 resistance (ohms)
32 °F (0 °C)	100.00	1000
50 °F (10 °C)	103.9	1039
68 °F (20 °C)	107.79	1078
77 °F (25 °C)	109.62	1096
86 °F (30 °C)	111.67	1117
104 °F (40 °C)	115.54	1155
122 °F (50 °C)	119.40	1194
140 °F (60 °C)	123.24	1232
158 °F (70 °C)	127.07	1271
176 °F (80 °C)	130.89	1309
194 °F (90 °C)	134.70	1347
212 °F (100 °C)	138.50	1385

Figure 8-9: Conductivity Determination

Formula:

$$\frac{\text{cell constant value x } 1{,}000{,}000}{\text{desired simulated conductivity in } \mu\text{S/cm}} = \text{resistance in ohms}$$

Example:

$$\frac{.01 \text{ x } 1{,}000{,}000}{10\ \mu\text{S/cm}} = \text{use } 1{,}000 \text{ ohm resistance}$$

Use the formula to determine the appropriate resistance value to use to simulate a conductivity value.

8.4 Chlorine, dissolved oxygen, and ozone diagnostics

8.4.1 Diagnostics overview

The Rosemount 5081 transmitter can display diagnostic information that is useful in troubleshooting. The diagnostics available depend on the measurement being made. To read diagnostic information, go to the main display and press **DIAG** on the infrared remote controller. Press **NEXT** until the desired diagnostic message appears. Refer to the appropriate section below for more information.

8.4.2 Diagnostic messages for dissolved oxygen

Message	See section
TYPE O2	TYPE O2
SEnSor Cur	SEnSor Cur
SEnSitvtY	SEnSitviTY
0 CurrEnt	0 CurrEnt.
bAr PreSS	bAr PreSS.
5081-A-Ht	5081-A-Ht.
FAULtS	FAULtS

TYPE O2

Transmitter is measuring oxygen.

Recommended action

Press **NEXT** to view diagnostics.

SEnSor Cur

Recommended action

Press **ENTER** to display raw current from sensor.

SEnSitviTY

Sensitivity is calculated during calibration. It is the measured current divided by the concentration.

Recommended action

Press **ENTER** to display sensitivity.

0 CurrEnt

Recommended actions

1. Press **ENTER** to display the zero current measured during calibration.
2. Note units.

bAr PreSS

Recommended action

Press **ENTER** to display the barometric pressure used by the transmitter during air calibration.

5081-A-Ht

This is the model number.

Recommended actions

1. Press **ENTER** to display the software revision level (`SFtr`).
2. Press **NEXT** to show the hardware revision level (`HArdr`).

FAULtS

Recommended action

Press **ENTER** to scroll through existing fault messages.

8.4.3 Diagnostic messages for ozone and total chlorine

Message	See section
TYPE O3 or tCL	TYPE O3 or TYPE tCL
SEnSor Cur	SEnSor Cur

Message	See section
SEnSitvtY	SEnSitviTY
0 CurrEnt	0 CurrEnt
5081-A-Ht	5081-A-Ht
FAULtS	FAULtS

TYPE O3 or TYPE tCL

The transmitter is measuring ozone or total chlorine.

Recommended actions

Press **NEXT** to view diagnostics.

8.4.4 Diagnostic messages for free chlorine

Message	See section
TYPE FCL	TYPE FCL
SEnSor Cur	SEnSor Cur
SEnSitvtY	SEnSitviTY
0 CurrEnt	0 CurrEnt
pH	pH
InPut	InPut
SLOPE	SLOPE
OFFSt	OFFSt
GIMP	GIMP
5081-A-Ht	5081-A-Ht
FAULtS	FAULtS

TYPE FCL

Transmitter is measuring free chlorine.

Recommended action

Press **NEXT** to view diagnostics.

pH

Recommended actions

1. Press **ENTER** to view pH diagnostics.
2. Press **NEXT** to skip pH diagnostics.

InPut

Current pH sensor input voltage in millivolts.

SLOPE

Sensor slope in millivolts per unit pH. Slope is calibrated during buffer calibration.

OFFSt

Sensor voltage in millivolts in pH 7 buffer.

GIMP

Glass impedance in MΩ.

8.5 Chlorine, dissolved oxygen, and ozone troubleshooting

8.5.1 Troubleshooting fault or warning messages

Message	Explanation	See section
OvEr rAnGe	Over range, measurement exceeds display limit.	OvEr rAnGE and AMP FAIL
AMP FAIL	Amperometric sensor failure, sensor current is too high.	OvEr rAnGE and AMP FAIL
bAd SEnSor	Bad sensor, sensor current is a large negative number.	bAd SEnSor
0 too biG	Zero current is too large, sensor was zeroed while current exceeded 100 nA.	0 too bIG
CAL Error	Calibration error, sensitivity (nA/ppm) is too high or too low.	CAL Error
nEEd 0 CAL	Sensor needs re-zeroing; reading is too negative.	nEEd 0 CAL
bAd rtd	Bad temperature reading.	bAd rtd and rtd OPEn
TEMP HI	Temperature reading exceeds 302 °F (150 °C).	tEmP HI
TEMP LO	Temperature reading is less than 5 °F (-15 °C).	tEmP LO.
rtd OPEn	Resistance temperature device (RTD) or thermistor is open.	bAd rtd and rtd OPEn
SenSE OPEn	Sense line is not connected.	SenSE OPEn
PH in	Raw millivolt reading from pH sensor is too large.	pH IN

Message	Explanation	See section
SLOPE HI	pH sensor slope exceeds 62 mV/pH.	SLOPE Err HI
SLOPE LO	pH sensor slope is less than 40 mV/pH.	SLOPE Err LO
-0- OFFSEt	Zero offset during standardization exceeds programmed limit.	-0- OFFSEt
GLASSFAIL	Measured glass impedance is less than programmed limit.	GLASSFAIL
FACt FAIL	Unit has not been factory calibrated.	FACt FAIL
CPU FAIL	Internal CPU tests have failed.	CPU FAIL
ROM FAIL	Internal memory has failed.	rOm FAIL
AdC	Analog to digital conversion failed.	AdC Error
bAd Gnd	Bad ground.	bAd Gnd
In too biG	mV signal from pH sensor is too large.	In too biG
RitE Err	CPU PCB jumper (JP-1) has been removed.	RitE Err

bAd SEnSor

Bad sensor means that the sensor current is a large negative number. `bAd SEnSor` may appear for a while when the sensor is first placed in service. Observe the sensor current by going to SEnSor Cur under the ***Diagnostic*** menu. If the sensor current is moving in the positive direction, there is probably nothing wrong, and the error message should soon disappear.

Recommended actions

1. Verify that wiring is correct. Pay particular attention to the anode and cathode connections.
2. Verify that the transmitter is configured for the correct measurement.

   Configuring the measurement sets (among other things) the polarizing voltage. Applying the wrong polarizing voltage to the sensor can cause a negative current.
3. Replace the sensor membrane and electrolyte solution and clean the cathode if necessary.

   See the sensor reference manual for details.
4. Replace the sensor.

0 too bIG

Normally, the transmitter will not accept a zero current until the current has fallen below a reasonable value. See the calibration section of the appropriate sensor reference manual for the analyte being determined for zero currents. However, you can force the transmitter to accept the present current as the zero value. The `0 too bIG` warning appears if the current at the time the sensor is zeroed is greater than 100 nA. Because the transmitter subtracts the zero current from the measured current before converting the result to a concentraiton, zeroing too soon will cause readings to be too low.

Procedure

1. Allow adequate time, possibly as long as overnight, for the sensor to stabilize before starting the zero routine.
2. Verify that the solution used for zeroing the sensor contains no analyte.

   Refer to the calibration section of the appropriate sensor reference manual for details.
3. Replace the sensor membrane and electrolyte solution and clean the cathode if necessary.

   See the appropriate sensor manual for details.
4. Replace the sensor.

CAL Error

At the end of the calibration step, the transmitter calculates the sensitivity in nA/ppm. If the sensitivity is outside the range normally expected, the transmitter displays the CAL Error message, and the transmitter does not update the calibration. For assistance, refer to the troubleshooting section specific to the sensor.

bAd rtd and rtd OPEn

These messages usually mean that the resistance temperature device (RTD) (or themistor in the case of the Rosemount Hx438sensor) is open or shorted or there is an open or short in the connecting wiring.

Recommended actions

1. See Simulate temperature.
2. Verify all wiring connections, including wiring in a junction box if one is being used.
3. Disconnect the RTD IN, RTD SENSE, and RTD RETURN leads or the thermistor leads at the transmitter. Note the color of the wire and where it was attached. Measure the distance between the RTD IN and RETURN leads. For a thermistor, measure the resistance between the two leads. The resistance should be close to the value in Table 8-4. If the temperature element is open or shorted, replace the sensor. In the meantime, use manual temperature compensation.

pH IN

`pH In` means the voltage from the pH measuring cell is too large.

Recommended actions

1. Verify all wiring connections, including connections in a junction box.
2. Check that the pH sensor is completely submerged in the process liquid.
3. Check the pH sensor for cleanliness. If the sensor looks fouled or dirty, clean it.

   Refer to the sensor reference manual for cleaning procedures.
4. Replace the sensor.

-0- OFFSEt

The `-0- OFFSEt` message appears if the standardization offset (in mV) exceeds the programmed limit. The default limit is 60 mV, which is equivalent to about a unit change in pH. Before increasing the limit to make the `-0- OFFSEt` message disappear, check the following:

Recommended actions

1. Verify that the reference pH meter is working properly and is properly calibrated.
2. Verify that the process pH sensor is working. Check its response in buffers.
3. If the transmitter is standardized against pH determined in a grab sample, be sure to measure the pH before the temperature of the grab sample changes more than a few degrees.
4. Verify that the process sensor is fully immersed in the liquid.

   If the sensor is not completely submerged, it may be measuring the pH of the liquid film covering the sensor. The pH of this film may be different from the pH of the bulk liquid.
5. Check the pH sensor for cleanliness. If the sensor looks fouled or dirty, clean it.

   Refer to the sensor reference manual for cleaning procedures.A large standardization offset may be caused by a poisoned reference electrode. Poisoning agents can cause the pH to be offset by as much as two pH units. To check the reference voltage, see Measuring reference voltage.

bAd Gnd

`bAd Gnd` usually means a problem with the analog PCB.

Recommended action

Contact the factory.

In too biG

`In too biG` means the raw millivolt signal from the pH sensor is too large.

Recommended actions

1. Verify that sensor wiring is correct and connections are tight. Be sure to check connections at the junction box if one is being used.
2. Replace the pH sensor with a sensor known to be working.
3. If replacing the pH sensor does not cause the message to disappear, call the factory for assistance.

RitE Err

Cause

CPU PCB jumper (JP-1) has been removed.

Recommended action

Reinsert the JP-1 jumper into the CPU board.

8.5.2 Oxygen measurement and calibration problems

Problem	See section
Zero current is too high.	Zero current too high
Zero reading is unstable.	Zero reading unstable
Sensor current during air calibration is substantially different from expected.	Sensor current outside range
Process and standard instrument readings during in-process calibration are substantially different.	Process and standard readings different
Process readings are erratic.	Process readings erratic
Readings drift.	Readings drift
Sensor does not respond to changes in oxygen level.	Sensor does not respond to changes in oxygen level
Readings are too low.	Oxygen readings are too low

Zero current too high

The zero current is substantially greater than the values in the table below.

Sensor	Zero current
Rosemount 499ADO	< 50 nA
Rosemount 499ATrDO	< 5 nA
Rosemount Hx438	< 1 nA

Recommended actions

1. Make sure the sensor is properly wired to the transmitter.
2. Make sure the membrane is completely covered with zero solution and that air bubbles are not trapped against the membrane. Swirl and tap the sensor to release air bubbles.
3. Make sure the zero solution is fresh and properly made. Zero the sensor in a solution of five percent sodium sulfite in water. Prepare the solution immediately before use.

   It has a shelf life of only a few days.
4. If you are zeroing the sensor with nitrogen gas, verify that the nitrogen is oxygen-free and the flow is adequate to prevent back-diffusion of air into the chamber.
5. The major contributor to the zero current is dissolved oxygen in the electrolyte solution inside the sensor. A long zeroing period usually means that an air bubble is trapped in the electrolyte. To ensure that the Rosemount 499ADO or 499ATrDO sensor contains no air bubbles, carefully follow the procedure in the appropriate

sensor reference manual for filling the sensor. After replacing the electrolyte solution, allow several hours for the zero current to stabilize.

On rare occasions, the sensor may need 24 hours to zero.

6. Check the membrane for damage and replace the membrane if necessary.

Zero reading unstable

Recommended actions

1. Make sure the sensor is properly wired to the transmitter and that all wiring connections are tight.
2. Readings are often erratic when a new or rebuilt sensor is first placed in service. Wait an hour for the readings to stabilize.
3. Make sure that the space between the membrane and the cathode is filled with electrolyte solution and that the flow path between the electrolyte reservoir and the membrane is clear. Hold the sensor with the membrane end pointing down and sharply shaking the sensor a few times as though shaking down a clinical thermometer.
4. If shaking does not work, try the following:
   a) For Rosemount 499ADO and 499ATrDO sensors, verify that the holes at the base of the cathode stems are open (use a straightened paper clip to clear the holes). Also verify that air bubbles are not blocking the holes. Fill the reservoir and establish electrolyte flow to the cathode.

      Refer to the sensor reference manual for the detailed procedure.

   b) For Rosemount Hx438 sensors, add fresh electrolyte solution to the sensor.

      Refer to the sensor reference manual for details.

Sensor current outside range

The sensor current is different from the numbers in the table below.

Sensor	nA/ppm
Rosemount 499ADO	1800 - 3100
Rosemount 499ATrDO	3600 - 6100
Rosemount Hx438	4.8 - 9.8

Recommended actions

1. Make sure the sensor is properly wired to the transmitter and that all connections are tight.
2. Make sure the membrane is dry.

   The membrane must be dry during air calibration. A droplet of water on the membrane during air calibration will lower the sensor current and cause an inaccurate calibration.
3. If the sensor current in the air is very low and the sensor is new, either the electrolyte flow has stopped or the membrane is torn or loose.

For instructions on how to restart electrolyte flow, see Zero reading unstable or refer to the sensor reference manual. To replace a torn membrane refer to the sensor reference manual.

4. Check the temperature.

   Sensor current is a strong function of temperature. The sensor current decreases about 3% for every 1 °C drop in temperature.

5. Check if the membrane is fouled or dirty. A dirty membrane inhibits diffusion of oxygen through the membrane, reducing the sensor current. Clean the membrane by rinsing it with a stream of water from a wash bottle or by gently wiping the membrane with a soft tissue. If cleaning the membrane does not improve the sensor response, replace the membrane and electrolyte solution. If necessary, polish the cathode.

   See the sensor reference manual for more information.

Process and standard readings different

This error warning appears if the current process reading and the reading it is being changed to (i.e., the reading from the standard instrument) are appreciably different.

Recommended actions

1. Make sure the standard instrument is properly zeroed and calibrated.
2. Make sure the standard and process sensor are measuring the same sample. Place the sensors as close together as possible.
3. Make sure the process sensor is working properly. Check the response of the process sensor in air and in sodium sulfite solution.

Process readings erratic

Readings are often erratic when a new sensor or a rebuilt sensor is first placed in service. The current usually stabilizes after a few hours.

Recommended actions

1. Make sure the sample flow is within the recommended range.

   High sample flow may cause erratic readings. Refer to the sensor reference manual for flow rates.

2. Make sure gas bubbles are not impinging on the membrane. Orient the sensor at an angle away from the vertical to reduce the noise.
3. Make sure the holes between the membrane and electrolyte reservoir might be plugged (applies to Rosemount 499ADO and 499ATrDO sensors only).

   Refer to Zero reading unstable.

4. Verify that wiring is correct. Pay particular attention to shield and ground connections.
5. Make sure the membrane is in good condition and the sensor is filled with electrolyte solution. Replace the fill solution and electrolyte.

   Refer to the sensor reference manual for details.

Readings drift

Recommended actions

1. See if the sample temperature is changing.

   Membrane permeability is a function of temperature. For the Rosemount 499ADO and 499ATrDO sensors, the time constant for a response to a temperature change is about five minutes. Therefore, the reading may drift for a while after a sudden temperature change. The time constant for Rosemount Hx438 sensors is much shorter; these sensors respond fairly rapidly to temperature changes.

2. Make sure the membrane is clean.

   For the sensor to work properly oxygen must diffuse freely through the membrane. A coating on the membrane will interfere with the passage of oxygen, resulting in a slow response.

3. Move the sensor out of direct sunlight.

   If the sensor is in direct sunlight during air calibration, readings drift as the sensor warms up. Because the temperature reading lags the true temperature of the membrane, calibrating the sensor in direct sunlight may introduce an error.

4. Make sure the sample flow is within the recommended range.

   Gradual loss of sample flow will cause downward drift.

5. See if the sensor is new or has recently been serviced.

   New or rebuilt sensors may require several hours to stabilize.

6. Check if the reagent flow is about 0.2 mL/min.

Sensor does not respond to changes in oxygen level

Recommended actions

1. If you are comparing readings with a portable laboratory instrument, verify that the laboratory instrument is working.
2. See if the membrane is clean. Clean the membrane and replace it as necessary. Check that the holes at the base of the cathode stem are open. Use a straightened paper clip to clear blockages. Replace the electrolyte solution.
3. Replace the sensor.

Oxygen readings are too low

Potential cause

Low readings can be caused by zeroing the sensor before the residual current has reached a stable minimum value. Residual current is the current the sensor generates even when no oxygen is in the sample. Because the residual current is subtracted from subsequent measured currents, zeroing before the current is a minimum can lead to low results.

Example: The true residual (zero) current for a Rosemount 499ADO sensor is 0.05 µA, and the sensitivity based on calibration in water-saturated air is 2.35 µA/ppm. Assume the measured current is 2.00 µA. The true concentration is (2.00 - 0.05)/2.35 or 0.83 ppm. If the sensor was zeroed prematurely when the current was 0.2 µA, the measured concentration will be (2.00 - 0.02)/2.35 or 0.77 ppm. The error is 7.2%. Suppose the

measured current is 5.00 µA. The true concentration is 2.11 ppm, and the measured concentration is 2.05 ppm. The error is now 3.3%. The absolute difference between the readings remains the same, 0.06 ppm.

Recommended action

Sensor response depends on flow. If the flow is too low, readings will be low and flow sensitive. Verify that the flow past the sensor equals or exceeds the minimum value. See the sensor reference manual for recommended flows. If the sensor is in an aeration basin, move the sensor to an area where the flow or agitation is greater.

8.5.3 Free chlorine measurement and calibration problems

Problem	See section
Zero current is substantially outside the range -10 to 10 nA.	Zero current outside range
Zero reading is unstable.	Zero reading unstable
Sensor current during calibration is substantially less than about 350 nA/ppm at 25 °C (77 °F) and pH 7.	Sensor current too low
Process readings are erratic.	Process readings erratic
Readings drift.	Readings drift
Sensor does not respond to changes in chlorine level.	Sensor not responding to chlorine changes
Chlorine reading spikes following rapid change in pH (automatic pH correction only).	Chlorine readings spike
Readings are too low.	Chlorine readings too low

Zero current outside range

The zero current is substantially outside the range: -10 to 10 nA.

Recommended actions

1. Make sure the sensor is properly wired to the transmitter.
2. Make sure the zero solution is chlorine-free. Take a sample of the solution and test it for free chlorine level.

   The concentration should be less than 0.02 ppm.
3. Make sure you have allowed adequate time for the sensor to reach a minimum stable residual current.

   It may take several hours, sometimes as long as overnight, for a new sensor to stabilize.
4. Check the membrane for damage and replace if necessary.

Zero reading unstable

Recommended actions

1. Make sure the sensor is properly wired to the transmitter and that all wiring connections are tight.
2. Readings are often erratic when a new or rebuilt sensor is first placed in service. Wait an hour for the readings to stabilize.
3. Make sure that the space between the membrane and the cathode is filled with electrolyte solution and that the flow path between the electrolyte reservoir and the membrane is clear. Hold the sensor with the membrane end pointing down and sharply shaking the sensor a few times as though shaking down a clinical thermometer.
4. If shaking does not work, try the following:
   a) For Rosemount 499ADO and 499ATrDO sensors, verify that the holes at the base of the cathode stems are open (use a straightened paper clip to clear the holes). Also verify that air bubbles are not blocking the holes. Fill the reservoir and establish electrolyte flow to the cathode.

      Refer to the sensor reference manual for the detailed procedure.

   b) For Rosemount Hx438 sensors, add fresh electrolyte solution to the sensor.

      Refer to the sensor reference manual for details.

Sensor current too low

The sensor current during calibration is substantially less than 250 nA/ppm at 77 °F (25 °C).

Recommended actions

1. Check to see if the temperature is low or the pH is high.

   Sensor current is a strong function of pH and temperature. The sensor current decreases about 3% for every °C drop in temperature. Sensor current also decreases as pH increases. Above pH 7, a 0.1 unit increase in pH lowers the current about 5%.

2. Check the rate of the sample flow.

   Sensor current depends on the rate of sample flow past the sensor tip. If the flow is too low, chlorine readings will be low. Refer to the sensor reference manual for recommended sample flows.

3. Check the electrolyte flow to the cathode and membrane.

   See step 3 in Zero reading unstable

4. Check if the membrane is fouled or coated. A dirty membrane inhibits diffusion of free chlorine through the membrane, reducing the sensor current and increasing the response time. Clean the membrane by rinsing it with a stream of water from a wash bottle.

⚠ CAUTION

Equipment damage

Do not use a tissue to wipe the membrane.

5. If cleaning the membane does not improve the sensor response, replace the membrane and electrolyte solution. If necessary, polish the cathode.

   See the sensor reference manual for details.

Sensor not responding to chlorine changes

Recommended actions

1. Make sure the grab sample test is accurate and that the grab sample representative of the sample is flowing to the sensor.
2. Check if the pH compensation is correct. If the transmitter is using manual pH correction, verify that the pH value in the transmitter equals the actual pH to within ±0.1 pH. If the transmitter is using automatic pH correction, check the calibration of the pH sensor.
3. Clean the membrane and replace if necessary. Check that the holes at the base of the cathode stem are open. Use a straightened paper clip to clear blockages. Replace the electrolyte solution.
4. Replace the sensor.

Chlorine readings spike

Chlorine readings spike following sudden changes in pH.

Cause

Changes in pH alter the relative amounts of hypochlorous acid (HOCl) and hypochlorite ion (OCl^-) in the sample. Because the sensor responds only to HOCl, an increase in pH causes the sensor current (and the apparent chlorine level) to drop even though the actual free chlorine concentration remains constant.

To correct the pH effect, the transmitter automatically applies a correction. Generally, the pH sensor responds faster than the chlorine sensor. After a sudden pH change, the transmitter will temporarily over-compensate and gradually return to the correct value.

A time constant for return to normal is about five minutes.

Chlorine readings too low

Recommended actions

1. Make sure the sample was tested as soon as it was taken.

   Chlorine solutions are unstable. Test the sample immediately after collecting it. Avoid exposing the sample to sunlight.

2. Low readings can be caused by zeroing the sensor before the residual current has reached a stable minimum value. Residual current is the current the sensor generates even when no chlorine is in the sample. Because the residual current is

subtracted from subsequent measured currents, zeroing before the current is a minimum can lead to low results.

3. Sensor response depends on flow. If the flow is too low, readings will be low and flow sensitive. Verify that the flow past the sensor equals or exceeds the minimum value.

   See the sensor reference manual for recommended flow.

8.5.4 Ozone measurement and calibration problems

Problem	See section
Zero current is substantially outside the range -10 to 10 nA.	Ozone zero current outside range
Zero reading is unstable.	Ozone zero reading unstable
Sensor current during calibration is substantially less than about 350 nA/ppm at 77 °F (25 °C).	Sensor current less than 350 nA/ppm
Process readings are erratic.	Ozone process readings erratic
Readings drift.	Ozone readings drift
Sensor does not respond to changes in ozone level.	Sensor not responding to ozone changes
Ozone readings are too low.	Oxygen readings are too low

Ozone zero current outside range

The ozone zero current is substantially outside the range: -10 to 10 nA.

Recommended actions

1. Make sure the sensor is properly wired to the transmitter.
2. Make sure the zero solution is ozone free. Test the zero solution for ozone level.

   The concentration should be less than 0.02 ppm.
3. Make sure you allow adequate time for the sensor to reach a minimum stable residual current.

   It may take several hours, sometimes as long as overnight, for a new sensor to stabilize.
4. Check the membrane for damage and replace it if necessary.

Ozone zero reading unstable

Recommended actions

1. Verify that the sensor is properly wired to the transmitter and that all wiring connections are tight.
2. Readings are often erratic when a new or rebuilt sensor is first placed in service. Wait about an hour for readings to stabilize.

3. Make sure that the space between the membrane and cathode is filled with electrolyte solution and the flow path between the electrolyte reservoir and membrane are clear.
    a) Hold the sensor with the membrane end pointing down and shake it sharply a few times as though shaking down a clinical thermometer.
    b) If shaking does not work, try cleaning the holes around the cathode stem. Hold the sensor with the membrane end pointing up. Be sure the wood ring remains with the membrane assembly. Use the end of a straightened paper clip to clear the holes at the base of the cathode stem. Replace the membrane.
    c) Verify that the sensor is filled with electrolyte solution.

       Refer to the sensor reference manual for details.

Sensor current less than 350 nA/ppm

The sensor current is less than 350 nA/ppm at 77 °F (25 °C).

Recommended actions

1. Check the temperature.

   Sensor current is a strong function of temperature. The sensor current decreases about 3% for every °C drop in temperature.
2. Check the rate of the sample flow past the sensor tip.

   If the flow is too low, ozone readings will be low. Refer to the sensor instruction sheet for recommended sample flows.
3. Check the electrolyte flow.

   A lack of electrolyte flow to the cathode and membrane can cause low current. See Step 3 in Ozone zero reading unstable.
4. Check if the membrane is fouled or coated.

   A dirty membrane inhibits diffusion of ozone through the membrane, reducing the sensor current and increasing the response time.
    a) Clean the membrane by rinsing it with a stream of water from a wash bottle or gently wipe the membrane with a soft tissue.
    b) If cleaning the membrane does not improve the sensor response, replace the membrane and electrolyte solution.
    c) If necessary, polish the cathode.

       See the sensor reference manual for details.

Ozone process readings erratic

The ozone process readings are erratic.

Recommended actions

1. Readings are often erratic when a new sensor or rebuilt sensor is first placed in service. Wait a few hours for the current to stabilize.

2. Check if the sample flow is within the recommended range.

   High sample flow may cause erratic readings. Refer to the sensor reference manual for recommended flow rates.

3. Check if the holes between the membrane and the electrolyte reservoir are open.

   Refer to Ozone zero reading unstable.

4. Verify that the wiring is correct. Pay particular attention to shield and ground connections.
5. Make sure the membrane is in good condition and the sensor is filled with electrolyte solution. Replace the fill solution and electrolyte.

   Refer to the sensor reference manual for details.

Ozone readings drift

Recommended actions

1. Check if the sample temperature is changing.

   Membrane permeability is a function of temperature. The time constant for the Rosemount 499AOZ sensor is about five minutes. Therefore, the reading may drift for a while after a sudden temperature change.

2. Check if the membrane is clean.

   For the sensor to work properly, ozone must diffuse freely through the membrane. A coating on the membrane will interfere with the passage of ozone, resulting in a slow response. Clean the membrane by rinsing it with a stream of water from a wash bottle, or gently wipe the membrane with a soft tissue.

3. Check if the sample flow is within the recommended range.

   Gradual loss of sample flow will cause a downward drift.

4. Check if the sensor is new or recently serviced.

   New or rebuilt sensors may require several hours to stabilize.

Sensor not responding to ozone changes

Recommended actions

1. Make sure the grab sample test is accurate and representative of the sample flowing to the sensor.
2. Clean the membrane and replace it if necessary.
   a) Check that the holes at the base of the cathode stem are open.
   b) Use a straightened paper clip to clear blockages.
   c) Replace the electrolyte solution.
3. Replace the sensor.

Ozone readings too low

Recommended actions

1. Test the sample immediately after collecting it.
   Ozone solutions are highly unstable.
2. Zeroing the sensor before the residual current has reached a stable minimum value can cause low readings.
   Residual current is the current the sensor generates even when no ozone is in the sample. Because the residual current is subtracted from subsequent measured currents, zeroing before the current is a minimum can lead to low results. See Oxygen readings are too low.
3. Verify that the flow past the sensor equals or exceeds the minimum value.
   Sensor response depends on flow. If the flow is too low, readings will be low and flow sensitive. See the sensor reference manual for recommended flows.

8.5.5 pH measurement and calibration problems

Problem	See Section
SLOPE HI or SLOPE LO message is showing.	SLOPE Err HI or SLOPE Err LO
-0- OFFSEt message is showing.	-0- OFFSEt
Transmitter will not accept manual slope.	Transmitter not accepting manual slope
Sensor does not respond to known pH changes.	Sensor not responding to pH changes
Process pH is slightly different from the expected value.	Process pH slightly different
Process pH reading changes when flow changes.	Process pH reading changes with flow
Process pH is grossly wrong and/or noisy.	Process pH grossly wrong or noisy
Process readings are noisy.	Process readings noisy

Transmitter not accepting manual slope

Recommended action

If you know the slope from other sources, enter it directly into the transmitter.

The transmitter will not accept a slope (at 77 °F [25 °C]) outside the range 45 to 60 mV/pH. If you attempt to enter a slope less than 45 mV/pH, the transmitter will automatically change the entry to 45. If you attempt to enter a slope greater than 60 mV/pH, the transmitter will change the entry to 60 mV/pH.

Sensor not responding to pH changes

Recommended actions

1. If the process pH reading was not as expected, check the performance of the sensor in buffers. Also, use a second pH meter to verify the change.
2. Make sure the sensor is properly wired to the transmitter.
3. Check the glass electrode impedance to see if the glass bulb is cracked or broken.
4. Check the transmitter by simulating the pH input.

Process pH slightly different

Differences between pH readings made with an online instrument and a laboratory or portable instrument are normal. The online instrument is subject to process variables (for example, ground potentials, stray voltages, and orientation effects) that may not affect the laboratory or portable instrument.

Process pH reading changes with flow

The sensor has some degree of flow sensitivity (i.e., changing the sample flow causes the pH readings to change). Flow sensitivity varies from sensor to sensor.

Flow sensitivity can be a source of error if the pH and chlorine sensor flow cells are connected in series. The chlorine sensor requires a fairly rapidly flowing sample, and high flows may affect the pH reading. Typically, the difference in pH reading from a pH sensor in a rapidly (16 gph) and slowly (<2 gph) flowing sample is less than about 0.05.

Recommended action

If the change is greater than 0.05, install the pH and chlorine sensors in parallel streams.

Process pH grossly wrong or noisy

Grossly wrong or noisy readings suggest a ground loop (measurement system connected to earth ground at more than one point), a floating system (no earth ground), or noise being brought into the transmitter by the sensor cable. The problem arises from the process or installation. It is not a fault of the transmitter. The problem should disappear once the sensor is taken out of the system. Check the following:

Recommended actions

1. Check if a ground loop is present.
   a) Verify that the system works properly in buffers. Be sure there is no direct electrical connection between the buffer containers and the process liquid or piping.
   b) Strip back the ends of a heavy gauge wire. Connect one end of the wire to the process piping or place it in the process liquid. Place the other end of the wire in the container of buffer with the sensor.

      The wire makes an electrical connection between the process and sensor.

   If offsets and noise appear after making the connection, a ground loop exists.
2. Check if the process is grounded. Ground the piping or tank to a local earth ground.

The measurement system needs one path to ground: through the process liquid and piping. Plastic piping, fiber-glass tanks, and ungrounded or poorly grounded vessels do not provide a path. A floating system can pick up stray voltages from other electrical equipment.

If noise still persists, simple grounding is not the problem. The sensor wiring is probably carrying noise into the instrument.

3. Simplify the sensor wiring.
   a) Verify that pH sensor wiring is correct.
   b) Disconnect all sensor wires at the transmitter except pH/mV IN, REFERENCE IN, RTD IN, and RTD RETURN. If the sensor is wired to the transmitter through a remote junction box containing a preamplifer, disconnect the wires at the sensor side of the junction box.
   c) Tape back the ends of the disconnected wires to keep them from making accidental connections with other wires or terminals.
   d) Connect a jumper wire between the RTD RETURN and RTD SENSE terminals.

   If noise and/or offsets disappear, the interference was coming into the transmitter through one of the sensor wires. The system can be operated permanently with simplified wiring.
4. Check for ground connections or induced noise.
   a) If the sensor cable is run inside conduit, there may be a short between the cable and the conduit. Re-run the cable outside the conduit. If symptoms disappear, there is a short between the cable and the conduit. Likely, a shield is exposed and touching the conduit. Repair the cable and reinstall it in the conduit.
   b) To avoid induced noise in the sensor cable, run it as far away as possible from the power cables, relays, and electric motors. Keep sensor wiring out of crowded panels and cable trays.
   c) If ground loops persist, contact the factory. A visit from a service technician may be required to solve the problem.

Process readings noisy

Recommended actions

1. Check the conductivity of the sample.

   Measuring pH in samples having conductivity less than about 50 µS/cm can be very difficult. Special sensors are often needed and special attention must be paid to grounding and sample flow rate.

   Note
   Measuring free chlorine in samples having low conductivity can also be a problem. Generally, for a successful chlorine measurement, the conductivity should be greater than 50 µS/cm.

2. Check if the sensor is dirty of fouled.

Suspended solids in the sample can coat the reference junction and interfere with the electrical connection between the sensor and the process liquid. The result is often a noisy reading.

3. Make sure the sensor is properly wired to the transmitter.
4. Check if a ground loop is present.

   Refer to Process pH grossly wrong or noisy.

8.5.6 Simulate input currents - dissolved oxygen

To check the performance of the transmitter, use a decade box to simulate the current from the oxygen sensor.

Procedure

1. Disconnect the anode and cathode leads from terminals 13 and 14 and connect a decade box as shown in Figure 8-10.

   It is not necessary to disconnect the resistance temperature device (RTD) leads.

Figure 8-10: Simulate Dissolved Oxygen

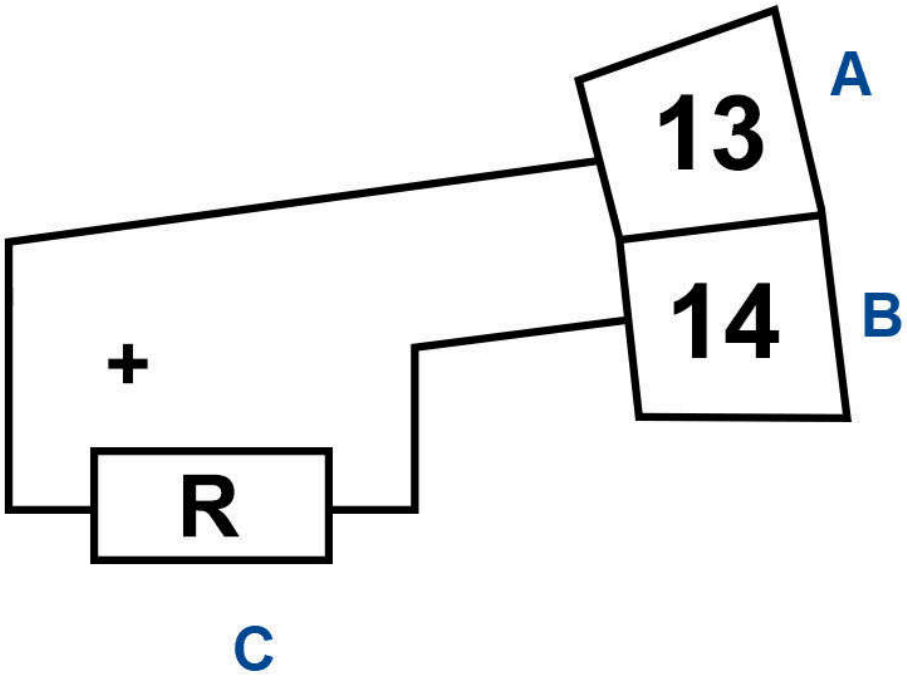

A. Anode
B. Cathode
C. Simulates sensor

2. Set the decade box to the resistance shown in the table.

Sensor	Polarizing voltage	Resistance	Expected current
Rosemount 499ADO	-675 mV	34 kΩ	20 µA
Rosemount 499ATrDO	-800 mV	20 kΩ	40 µA
Rosemount Hx438	-675 mV	8.4 MΩ	80 nA

3. Note the sensor current. To view the sensor current:
   a) Go to the main display and press **DIAG**.
   b) Press **NEXT**.
      `SEnSor Cur` appears in the display.
   c) Press **ENTER**.
      The display shows the sensor current.
   d) Note the units.
      µA is microamps; nA is nanoamps.
4. Change the decade box resistance and verify that the correct current is shown. Calculate the current from the equation:

$$\text{current } (\mu A) = \frac{\text{voltage } (mV)}{\text{resistance } (k\Omega)}$$

8.5.7 Simulate input currents - chlorine and ozone

To check the performance of the transmitter, use a decade box and a battery to simulate the current from the sensor. The battery, which opposes the polarizing voltage, is necessary to ensure that the sensor current has the correct sign.

Procedure

1. Disconnect the anode and cathode leads from terminals 13 and 14 and connect a decade box and battery as shown in Figure 8-11.
   It is not necessary to disconnect the resistance temperature device (RTD) leads.

Figure 8-11: Simulate Chlorine and Ozone

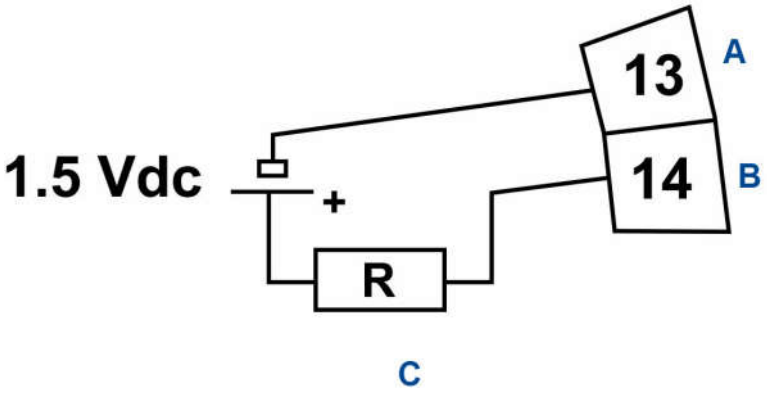

A. Anode
B. Cathode
C. Simulates sensor

2. Set the decade box to the resistance shown in the table.

Sensor	Polarizing voltage	Resistance	Expected current
Rosemount 499ACL-01 (free chlorine)	200 mV	28 MΩ	500 nA
Rosemount 499ACL-02 (total chlorine)	250 mV	675 kΩ	2000 nA
Rosemount 499AOZ	200 mV	2.7 MΩ	500 nA

3. Note the sensor current.

   It should be close to the value in the table. The actual value depends on the voltage of the battery. To view the sensor current:

   a) Go to the main display and press **DIAG**.

   b) Press **NEXT**.
   `SEnSor Cur` appears in the display.

   c) Press **ENTER**.
   The display shows the sensor current.

   d) Note the units
   µA is microamps; na is nanoamps.

4. Change the decade box resistance and verify that the correct current is shown. Calculate the current from the equation:

$$\text{current } (\mu\text{A}) = \frac{\text{V}_{\text{battery}} - \text{V}_{\text{polarizing}}\,(\text{mV})}{\text{resistance } (\text{k}\Omega)}$$

The voltage of a fresh 1.5 volt battery is about 1.6 volt (1600 mV).

8.5.8 Simulating inputs - pH

General information about simulating pH inputs

This section describes how to simulate a pH input into the transmitter. To simulate a pH measurement, connect a standard millivolt source to the transmitter. If the transmitter is working properly, it will accurately measure the input voltage and convert it to pH. Although the general procedure is the same, the wiring details depend on whether the preamplifier is in the sensor, a junction box, or the transmitter.

Simulate pH inputs when the preamplifier is in the transmitter

Procedure

1. Turn off automatic temperature correction and set the manual temperature to 77 °F (25 °C).
2. Disconnect the pH sensor. Also, disconnect the chlorine sensor anode lead. Connect a jumper wire between the pH IN and REF IN terminals.
3. Confirm that the transmitter is reading the correct mV value.
   a) With the main display showing, press **DIAG**.
   b) Press **NEXT** until the display shows `PH`.
   c) Press **ENTER**.
   The display shows `InpUt` followed by a number. The number is the raw input signal in millivolts. The measured voltage should be 0 mV.
4. Confirm that the transmitter is reading the correct pH value.
   a) Go to the main display.
   b) Press **3** or **5**.
   The second line of the display shows the pH. The pH should be approximately 7.00. Because calibration data stored in the transmitter may be offsetting the input voltage, the displayed pH may not be exactly 7.00
5. If a standard millivolt source is available, disconnect the jumper wire between the pH IN and REF IN terminals and connect the voltage source as shown in Figure 8-12.

Figure 8-12: Simulate pH

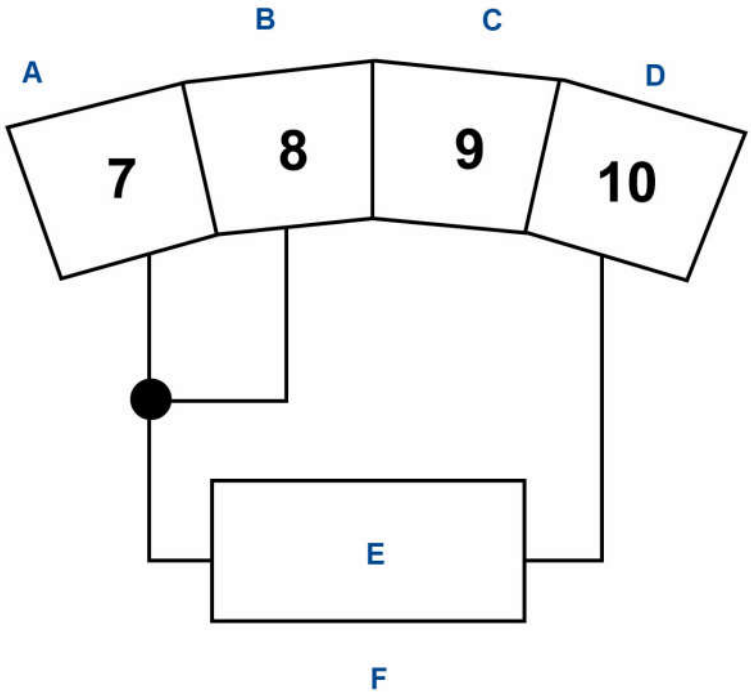

A. Reference in
B. Solution ground
C. pH guard
D. pH in
E. mV source
F. Simulates pH

6. Calibrate the transmitter. Use 0.0 mV for Buffer 1 (pH 7.00) and -177.4 mV for Buffer 2 (pH 10.00).
   If the transmitter is working properly, it should accept the calibration. The slope should be 59.16 mV/pH, and the offset should be zero.
7. To check linearity, set the voltage source to the values shown in the table and verify that the pH and millivolt readings match the values in the table.

Voltage (mV)	pH (at 77 °F [25 °C])
295.8	2.00
177.5	4.00
59.2	6.00
59.2	8.00
177.5	10.00
295.8	12.00

Simulate pH inputs when the preamplifier is in a junction box

The procedure is the same as described in Simulate pH inputs when the preamplifier is in the transmitter. Keep the connection between the transmitter and the junction box in place. Disconnect the sensor at the sensor side of the junction box and connect the voltage source to the sensor side of the junction box.

Simulate pH inputs when the preamplifier is in a sensor

The preamplifier in the sensor converts the high impedance signal into a low impedance signal without amplifying it. To simulate pH values, follow the procedure in Simulate pH inputs when the preamplifier is in the transmitter.

8.5.9 Simulate temperature

The transmitter accepts either a Pt100 resistance temperature device (RTD) (used in Rosemount pH, 499ADO, 499ATrDO, 499ACL-01, 499ACL-02, and 499AOZ sensors) or a 22k NTC thermistor (used in Rosemount Hx438 dissolved oxygen sensors and most steam-sterilizable sensors from other manufacturers).

The Pt100 RTD has a three-wire configuration. See Figure 8-13. The thermistor has a two-wire configuration.

Figure 8-13: Three-Wire RTD Configuration

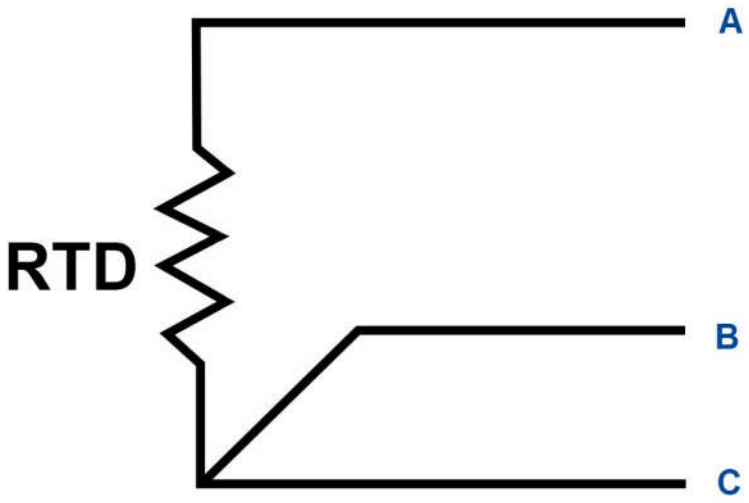

A. RTD in
B. RTD sense
C. RTD return

Although only two wires are required to connect the RTD to the transmitter, using a third wire allows the transmitter to correct for the resistance of the lead wires and for changes in the lead wire resistance with temperature.

Procedure

1. To simulate the temperature input, wire a decade box to the transmitter or junction box as shown in Figure 8-14.

Figure 8-14: Simulating RTD Inputs

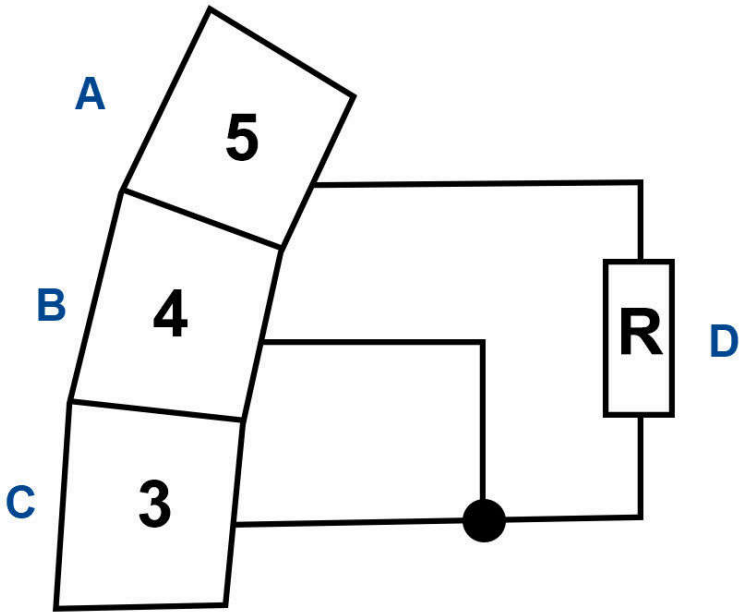

A. RTD in
B. RTD sense
C. RTD return
D. Simulates RTD

The figure shows wiring connections for sensors containing a Pt 100 RTD. For sensors using a 22k NTC thermistor (Rosemount Hx438), wire the decade box to terminals 1 and 2 on TB6.

2. To check the accuracy of the temperature measurement, set the resistor to simulating the RTD to the values indicated in Table 8-4 and not the temperature readings.

   The measured temperature might not agree with the value in the table. During sensor calibration, an offset might have been applied to make the measured temperature agree with a standard thermometer. The offset is also applied to the simulated resistance. The controller is measuring temperature correctly if the difference between measured temperatures equals the difference between the values in the table to within ±0.1 °C.

Table 8-4: RTD Values

Temp	Pt 100 (Ω)	22k NTC (kΩ)
1 °C (34 °F)	100.0	64.88
10 °C (50 °F)	103.9	41.33
20 °C (68 °F)	107.8	26.99
25 ° C (77 °F)	109.7	22.00
30 °C (86 °F)	111.7	18.03

Table 8-4: RTD Values *(continued)*

Temp	Pt 100 (Ω)	22k NTC (kΩ)
40 °C (104 °F)	115.5	12.31
50 °C (122 °F)	119.4	8.565
60 °C (140 °F)	123.2	6.072
70 °C (150 °F)	127.1	4.378
80 °C (176 °F)	130.9	3.208
85 °C (185 °F)	132.8	2.761
90 °C (194 °F)	134.7	2.385
100 (212 °F)	138.5	1.796

Example

For example, start with a simulated resistance of 103.9 Ω, which corresponds to 10.0 °C (50 °F). Assume that the offset from the sensor calibration was -0.3 Ω. Because of the offset, the transmitter calculates temperature using 103.6 Ω. The result is 9.2 °C (48.6 °F). Now change the resistance to 107.8 Ω, which corresponds to 20.0 °C (68 °F). The transmitter uses 107.5 Ω to calculate the temperature, so the display reads 19.2 °C (66.6 °F). Because the difference between the displayed temperatures (10.0 °C) is the same as the difference between the simulated temperatures, the transmitter is working correctly.

8.5.10 Measuring reference voltage

Some processes contain substances that poison or shift the potential of the reference electrode. Sulfide is a good example. Prolonged exposure to sulfide converts the reference electrode from a silver/silver chloride electrode to a silver/silver sulfide electrode. The change in reference voltage is several hundred millivolts.

A good way to check for poisoning is to compare the voltage of the reference electrode with a silver/silver chloride electrode known to be good. The reference electrode from a new sensor is best. See Figure 8-15. If the reference electrode is good, the voltage difference should be no more than about 20 mV. A poisoned reference electrode usually requires replacement.

Figure 8-15: Checking for a Poisoned Reference Electrode

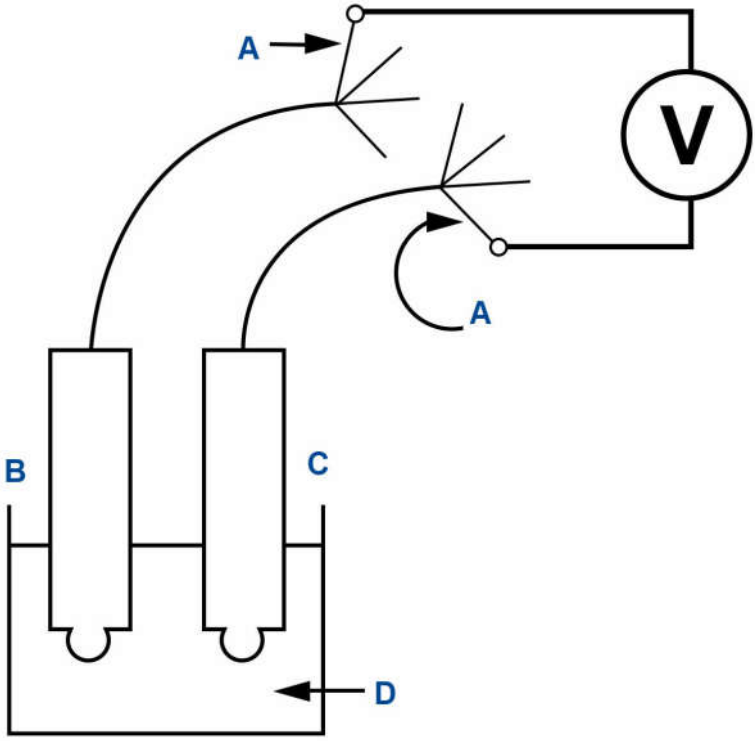

A. Reference lead
B. Suspect sensor
C. Good sensor
D. Buffer of KCl solution

Refer to the sensor wiring diagram to identify the reference leads. A laboratory silver/silver chloride electrode can be used in place of the second sensor.

8.6 Factory assistance and repairs

For assistance in correcting transmitter, sensor, and measurement problems:

- In the United States, call Emerson Liquid Division at +1 800 854 8257
- Outside the United States, call the nearest Emerson office. See the back page of the manual.

9 Digital communications

9.1 HART® communications

9.1.1 HART® communications overview

HART (highway addressable remote transducer) is a digital communication system in which two frequencies are superimposed on the 4 to 20 mA output signal from the transmitter. A 1200 Hz sine wave represents the digit 1, and a 2400 Hz sine wave represents the digit 0. Because the average value of a sine wave is zero, the digital signal adds no dc component to the analog signal. HART permits digital communication while restarting the analog signal for process control.

The HART protocol, originally developed by Fisher-Rosemount, is now overseen by the independent HART Communication Foundation. The foundation ensures that all HART devices can communicate with one another. For more information about HART communications, call the HART Communication Foundation at (512) 794-0369. The web address is http://www.fieldcommgroup.org.

9.1.2 HART® interface devices

With HART communicators, you can view measurement data (pH, ORP, and temperature), program the transmitter, and download information from the transmitter for transfer to a computer for analysis. You can also send downloaded information to another HART transmitter. To access the HART interface, you can use either a handheld communicator or a computer.

HART interface devices operate from any wiring termination point in the 4 - 20 mA loop. A minimum load of 250 ohms must be present between the transmitter and the power supply. See Figure 9-1.

If your communicator does not recognize the Rosemount™ 5081 transmitter, you may need to update the device description library. Call the manufacturer of your HART communication device for updates.

Figure 9-1: HART Communicators

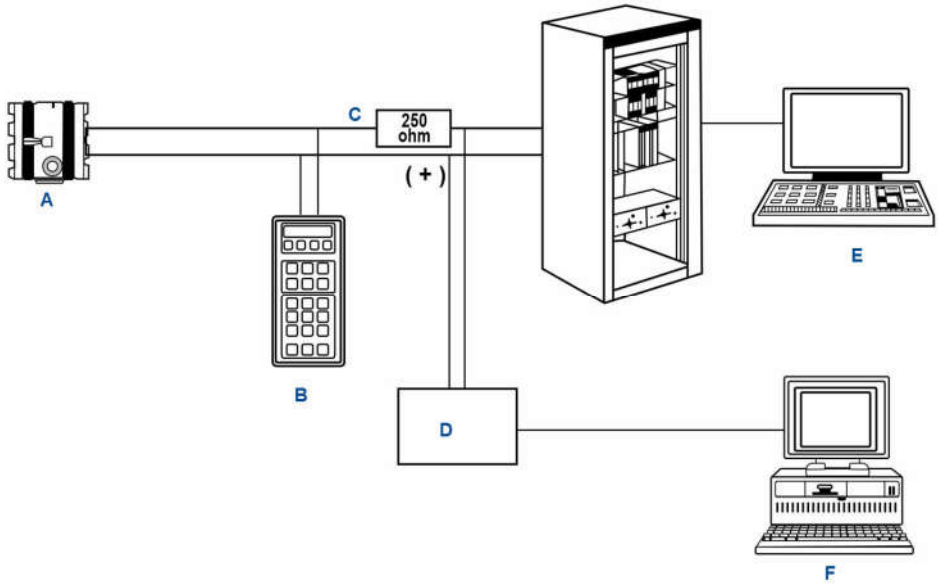

A. Rosemount 5081 two-wire transmitter
B. Handheld communicator (configurator)
C. 4-20 mA + digital
D. Bridge
E. Control system
F. Computer

9.2 FOUNDATION™ Fieldbus communication

Figure 9-2 shows the Rosemount 5081 using FOUNDATION Fieldbus to measure conductivity. The figure also shows three ways in which Fieldbus communciation can be used to read process variables and configure the transmitter.

Figure 9-2: Configuring Rosemount 5081 Transmitter with FOUNDATION Fieldbus

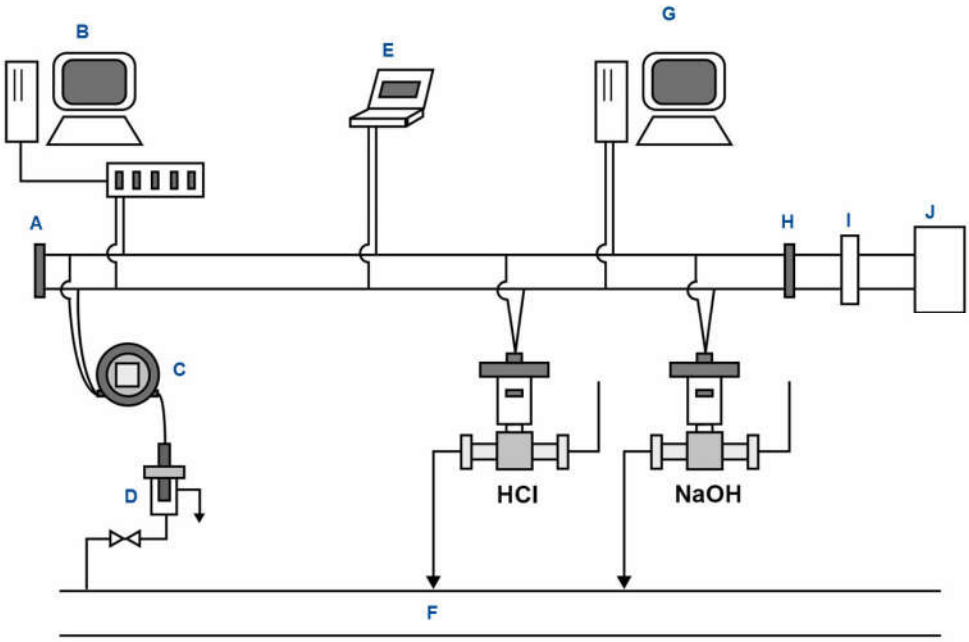

A. Terminator
B. DeltaV configurator and host
C. Rosemount 5081
D. Sensor
E. Fieldbus technician configurator
F. Process line
G. Other host
H. Terminator
I. Filter
J. Power supply

9.2.1 FOUNDATION™ Fieldbus specifications

Model	Rosemount 5081 Fieldbus transmitter
Device ITK profile	6 (released for (ITK 6.0.0/6.0.1)
Manufacturer identification (MANUFAC_ID)	0x524149
Device type (DEV_TYPE)	0x4084
Device revision (DEV_REV)	0x03
Linkmaster	Yes
Number of link objects	20
VCRs supported	20

Mandatory features	• Resource block • Alarm and events • Function block linking • Trending • Multi-bit alert reporting • Field diagnostics
Additional features	• Common software download • Block instantiation • Supports DeltaV auto commissioning • Supports DeltaV auto replacement • Supports DeltaV firmware live download • PlantWeb alerts with re-annunciation/ multibit • Supports easy configuration assistant
Function blocks (execution time)	• 4 - analog input blocks (15 mseconds) • AI block channels Channel 1: Conductivity, resistivity, concentration Channel 2: Temperature Channel 3: Raw conductivity • Proportional integral derivative (25 milliseconds)
Power	• Two wire device; Fieldbus polarity insensitive • Current draw: 21 mA • Device certifications: IS / FISCO • Maximum certified input voltage for IS: 30 V • Maximum certified input current for IS: 300 mA • Maximum certified input power for IS: 1.3 W • Internal capacitance (Ci): 0 nF • Internal inductance (Li): 0 µH

9.3 Asset Management Solutions

Asset Management Solutions (AMS) is software that helps plant personnel better monitor the performance of analytical instruments, pressure and temperature transmitters, and control valves. Continuous monitoring means maintenance personnel can anticipate equipment failures and plan preventative measures before costly breakdown maintenance is required.

AMS uses remote monitoring. The operator, sitting at a computer, can view measurement data, change program settings, read diagnostic and warning messages, and retrieve historical data from any HART®-compatible device, including the Rosemount 5081 transmitter. Although AMS allows access to the basic functions of any HART compatible device, Rosemount has developed additional software that allows access to all features of the Rosemount 5081 transmitter.

AMS can play a central role in plant quality assurance and quality control. Using AMS Audit Trail, plant operators can track calibration frequency and results as well as warnings and diagnostic messages. The information is available to Audit Trail whether calibrations were done using the infrared remote controller, the HART communicator, or AMS software.

AMS operates in Windows 95. AMS communicates through a HART-compatible modem with any HART transmitters, including those from other manufacturers. AMS is also compatible with FOUNDATION™ Fieldbus, which allows future upgrades to Fieldbus instruments.

Rosemount AMS windows provide access to all transmitter measurement and configuration variables. You can read raw data, final data, and program settings and can reconfigure the transmitter from anywhere in the plant.

10 Return of material

10.1 General information

To expedite the repair and return of instruments, proper communication between the customer and the factory is important. Call 1-800-999-9307 for a Return Materials Authorization (RMA) number.

10.2 Warranty repair

To return instruments still under warranty:

Procedure

1. Contact Rosemount™ for authorization.
2. To verify warranty, supply the factory sales order number or the original purchase order number.

   In the case of individual parts or sub-assemblies, supply the serial number on the unit.
3. Carefully package the materials and enclose your Letter of Transmittal. If possible, pack the materials in the same manner as they were received.
4. Send the package prepaid to:

   Emerson Automation Solutions

   8200 Market Blvd

   Chanhassen, MN 55317

   RMA No. _____
5. Mark the package: *Returned for Repair*

   Model No. _____

10.3 Non-warranty repair

To return instruments that are no longer under warranty for repair:

Procedure

1. Call Rosemount for authorization.
2. Supply the purchase order number and make sure to provide the name and telephone number of the individual to be contacted should additional information be needed.
3. Do steps 3-5 of Warranty repair.

Note
Consult the factory for additional information regarding service or repair.

A Engineering Drawings

The following is a list of engineering drawings in the order in which they appear in this manual.

Drawing number	Title
1400674	Schem, CSA I.S. / NIFW installation 5081 C/T
1400675	Schem, CSA I.S. / NIFW install 5081 P/A
1400676	Schem, FM I.S. / NIFW install 5081 A/P
1400677	Schem, FM I.S / NIFW installation 5081 C/T
1400678	Sch, system FM DIP/EXP proof 5081 C/T
1400679	Sch, system FM DIP/EXP proof 5081 P/A
1700783	Certified product, 5081 XMTR, CSA
1700784	Certified product, 5081 XMTR, FM
1700785	Certified product, 5081 P/A ATEX/IECEx
1700786	Certified product, 5081 C/T ATEX/IECEx

TABLE I

GAS GROUPS	C OPTION OUTPUT PARAMETERS Ca (uf)		La (mH)
	FF / FI		HT
A, B	2.05	0.4	0.5
C	490.05	1.6	7.0
D	9990.05	3.1	3.7

TABLE II

C OPTION OUTPUT PARAMETERS	5081C TB1, PINS 1 THRU 12	
	FF / FI	HT
Vt	6.51 Vdc	6.51 Vdc
It	302.59 mA	280 mA
Pt	365 mW	442 mW

TABLE III

5081C/T INPUT PARAMETERS, SUPPLY/SIGNAL TERMINALS, TB1 PINS 15 & 16						Voc MAX OUT (Vdc)	Isc MAX OUT (mA)
OPTIONS	Vmax(Vdc)	Imax (mA)	Pmax (W)	Ci (nF)	Li (uH)		
FI (FISCO)	17.5	380	5.32	5	10		
FF/FI (NON-FISCO)	30	300	1.3	27.8	0		
HT (NON-FISCO)	30	200	0.9	27.8	0		
ENTITY PARAMETERS: FIELD COMMUNICATOR							
375/475	30	200	1	.00	0.0	1.9	3.2

17. FOR THE C OPTION, THE CAPACITANCE AND INDUCTANCE CONNECTED TO THE SENSOR TERMINALS MUST NOT EXCEED THE VALUES SPECIFIED IN TABLE I.
16. FOR C OPTION, SENSORS SHALL BE CSA APPROVED IN ACCORDANCE WITH THE ENTITY REQUIREMENTS OR MEET THE REQUIREMENTS OF SIMPLE APPARATUS AS DEFINED IN ANSI/ISA RP12.6 AND THE NEC, ANSI/NFPA 70. THEY CANNOT GENERATE NOR STORE MORE THAN 1.5V, 0.1mA, 25mW OR A PASSIVE COMPONENT THAT DOES NOT DISSIPATE MORE THAN 1.3W. SEE TABLES I AND II.

△15 NON-INCENDIVE FIELD WIRING METHODS MAY BE USED FOR CONNECTING SENSORS TO THE INSTRUMENT. ATTACHED SENSORS MUST BE CSA APPROVED AS NON-INCENDIVE FOR CLASS 1, DIVISION 2, GROUPS ABCD WITH INPUT VALUES OF Vmax AND Imax ≥ Voc (Vt) AND Isc (It) LISTED IN TABLE II AND THE Ci AND Li OF THE SENSOR AND INTERCONNECTED WIRING MUST BE ≤ Ca AND La LISTED IN TABLE 1 OR BE CLASSIFIED AS "SIMPLE APPARATUS". SIMPLE APPARATUS ARE DEVICES WHICH ARE INCAPABLE OF GENERATING OR STORING MORE THAN 1.2 V, 0.1 A, 25 mW OR 20 µJ (CONTACTING CONDUCTIVITY SENSORS QUALIFY AS SIMPLE APPARATUS).

△14 INSTALLATION TO BE IN ACCORDANCE WITH THE CANADIAN ELECTRICAL CODE.

△13 DIVISION 2 WIRING METHOD PER THE CANADIAN ELECTRICAL CODE (EXCLUDING NONINCENDIVE FIELD WIRING).

△12 INTRINSICALLY SAFE APPARATUS (5081, IRC TRANSMITTER, 375/475 FIELD COMMUNICATOR, FIELDBUS TERMINATOR OR ANY OTHER FIELDBUS DEVICES) AND ASSOCIATED APPARATUS (SAFETY BARRIER) SHALL MEET THE FOLLOWING REQUIREMENTS:
THE VOLTAGE (Vmax) AND CURRENT (Imax) OF THE INTRINSICALLY SAFE APPARATUS MUST BE EQUAL TO OR GREATER THAN THE VOLTAGE (Voc OR Vt) AND CURRENT (Isc OR It) WHICH CAN BE DELIVERED BY THE ASSOCIATED APPARATUS (SAFETY BARRIER). IN ADDITION, THE MAXIMUM UNPROTECTED CAPACITANCE (Ci) AND INDUCTANCE (Li) OF THE INTRINSICALLY SAFE APPARATUS, INCLUDING INTERCONNECTING WIRING, MUST BE EQUAL OR LESS THAN THE CAPACITANCE (Ca) AND INDUCTANCE (La) WHICH CAN BE SAFELY CONNECTED TO THE APPARATUS. (REF. TABLE III)

△11 FOR (NON-FISCO) INTRINSIC SAFETY INSTALLATION, ANY SINGLE SHUNT ZENER DIODE SAFETY BARRIER APPROVED BY CSA HAVING THE FOLLOWING OUTPUT PARAMETERS:
SUPPLY/SIGNAL TERMINALS ON TB1, PINS 15 AND 16.
Voc OR Vt NOT GREATER THAN 30 V FOR FF, FI AND HT OPTIONS
Isc OR It NOT GREATER THAN 300 mA FOR FF AND FI OPTIONS, OR 200 mA FOR HT OPTION
Pmax NOT GREATER THAN 1.3 W FOR FF AND FI OPTIONS, OR 0.9 mW FOR HT OPTION.

△10 FOR T OPTION, MAXIMUM CABLE LENGTH IS 250 FEET.

9. USE SUPPLY WIRES SUITABLE FOR 5°C ABOVE SURROUNDING AMBIENT.
8. NO REVISION TO DRAWING WITHOUT PRIOR CSA APPROVAL.
7. THE CONFIGURATION OF ASSOCIATED APPARATUS MUST BE CSA APPROVED UNDER THE ASSOCIATED CONCEPT AND (FOR HT AND FF OPTIONS) BE RESISTIVELY LIMITED WITH LINEAR OUTPUTS.
6. CONTROL EQUIPMENT CONNECTED TO ASSOCIATED APPARATUS MUST NOT USE OR GENERATE MORE THAN 250 Vrms OR Vdc.
5. ASSOCIATED APPARATUS MANUFACTURER'S INSTALLATION DRAWING MUST BE FOLLOWED WHEN INSTALLING THIS EQUIPMENT.
4. THE ENTITY CONCEPT ALLOWS INTERCONNECTION OF INTRINSICALLY SAFE APPARATUS WITH ASSOCIATED APPARATUS WHEN THE FOLLOWING IS TRUE:

FIELD DEVICE INPUT		ASSOCIATED APPARATUS OUTPUT
Vmax OR Ui	≥	Voc, Vt OR Uo
Imax OR Ii	≥	Isc, It OR Io
Pmax OR Pi	≥	Po
Ci + Ccable	≤	Ca, Ct OR Co (FOR NON-FISCO INSTALLATIONS)
Li + Lcable	≤	La, Lt OR Lo (FOR NON-FISCO INSTALLATIONS)

3. RESISTANCE BETWEEN INTRINSICALLY SAFE GROUND AND EARTH GROUND MUST BE LESS THAN 1.0 Ohm.
2. DUST-TIGHT CONDUIT SEAL MUST BE USED WHEN INSTALLED IN CLASS II AND CLASS III ENVIRONMENTS.
1. INSTALLATION SHOULD BE IN ACCORDANCE WITH ANSI/ISA RP12.06 "INSTALLATION OF INTRINSICALLY SAFE SYSTEMS FOR HAZARDOUS (CLASSIFIED) LOCATIONS" (EXCEPT CHAPTER 5 FOR FISCO INSTALLATIONS) AND THE CANADIAN ELECTRICAL CODE (CSA C22.1).

NOTES: UNLESS OTHERWISE SPECIFIED

FISCO INTRINSIC SAFETY INSTALLATION

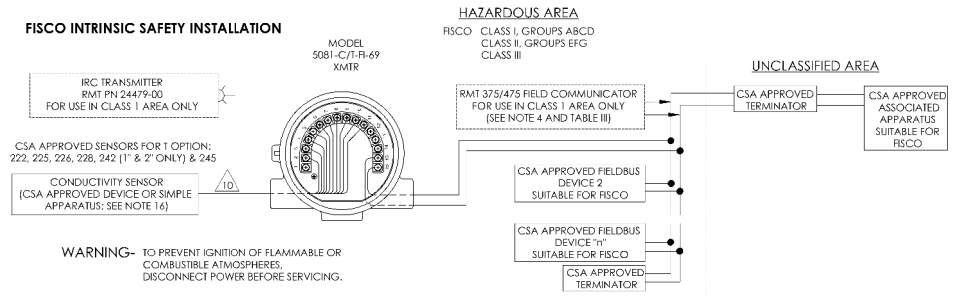

(NON-FISCO) INTRINSIC SAFETY INSTALLATION

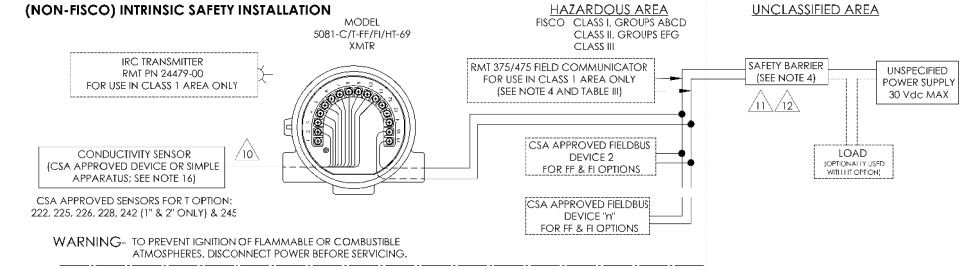

DIVISION 2 NONINCENDIVE FIELD WIRING INSTALLATION

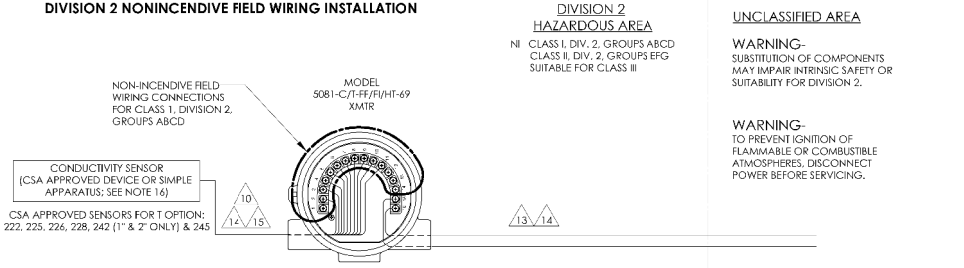

DWG NO
1400674

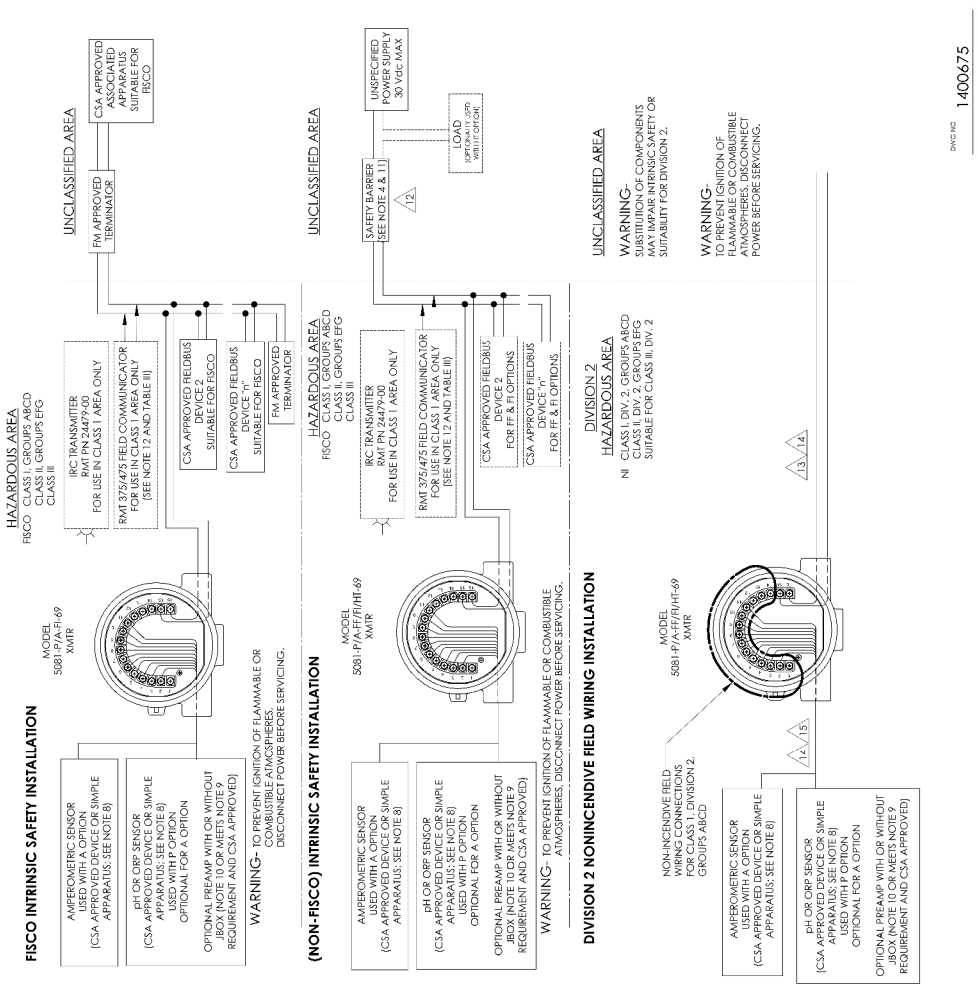

TABLE I

GAS GROUPS	5081 P/A OUTPUT PARAMETERS	
	Co (µF)	Lo (mH)
	H / I	I
A, B	0.96	3.1
C	5.99	12.3
D	21.69	26

	5081 P/A OUTPUT PARAMETERS	
	Co (µF)	Lo (mH)
	H / I	I
A, B	0.96	3.1
C	5.99	12.3
D	21.69	26

TABLE II

OUTPUT PARAMETERS	5081 P/A TB1, 2 & TB2, 1-12	
	FF / FI	HT
Vt	13.07 Vdc	13.07 Vdc
It	105.44 mA	120 mA
Pt	1.47 mW	192 mW

TABLE III

5081 P/A INPUT PARAMETERS, SUPPLY/SIGNAL TERMINALS, (81 FNS 13 & 16					VOC MAX. (VOLTS)	ISC MAX. (mA)
OPTIONS	Vmax(V)(Vt)	Imax (mA)	Pmax (W)	Ci (nF)	Li (uH)	
FI (FISCO)	17.5	380	5.32	22.8	0	
FF/PI (NON-FISCO)	30	300	1.3	22.8	0	
HT (NON-FISCO)	30	300	1.3	22.8	0	
	P1(FF/PI PARAMETERS) (HT) COMMUNICATION				32	
	30/24/3		200	1.9	60	

17. THE CAPACITANCE AND INDUCTANCE CONNECTED TO THE SENSOR TERMINALS MUST NOT EXCEED THE VALUES SPECIFIED IN TABLE II.
16. NO REVISION TO DRAWING WITHOUT CSA APPROVAL.
15. NON-INCENDIVE FIELD WIRING METHODS MAY BE USED FOR CONNECTING SENSORS TO THE INSTRUMENT, ATTACHED SENSORS MUST BE CSA APPROVED AS NON-INCENDIVE FOR CLASS 1, DIVISION 2, GROUPS ABCD WITH INPUT VALUES OF Vmax AND Imax ≥ Voc (Vt) AND Isc (It) LISTED IN TABLE II AND THE CABLE SPECIFIED IN TABLE I. THE SENSOR ASSEMBLY MUST BE CSA APPROVED AS SIMPLE APPARATUS WITH Co AND Lo OR BE CLASSIFIED AS SIMPLE APPARATUS PER ARTICLE 504.2. SIMPLE APPARATUS ARE DEVICES WHICH ARE INCAPABLE OF GENERATING OR STORING MORE THAN 1.2 V, 0.1 A, 25 mW OR 20 µJ (AMPEROMETRIC SENSORS WITHOUT PREAMPS QUALIFY AS SIMPLE APPARATUS).
14. INSTALLATION TO BE IN ACCORDANCE WITH THE CANADIAN ELECTRICAL CODE.
13. DIVISION 2 WIRING METHOD (EXCLUDING NONINCENDIVE FIELD WIRING).
12. INTRINSICALLY SAFE APPARATUS (5081, IRC TRANSMITTER, 375/475 FIELD COMMUNICATOR, FIELDBUS TERMINATOR OR ANY OTHER FIELDBUS DEVICES) AND ASSOCIATED APPARATUS (SAFETY BARRIER) SHALL MEET THE FOLLOWING REQUIREMENTS:
THE VOLTAGE (Vmax) AND CURRENT (Imax) OF THE INTRINSICALLY SAFE APPARATUS MUST BE EQUAL OR LESS THAN THE ASSOCIATED APPARATUS (SAFETY BARRIER). IN ADDITION, THE MAXIMUM UNPROTECTED CAPACITANCE (Ci) AND INDUCTANCE (Li) OF THE INTRINSICALLY SAFE APPARATUS, INCLUDING INTERCONNECTING WIRING, MUST BE EQUAL OR LESS THAN THE CAPACITANCE (Co) AND INDUCTANCE (Lo) WHICH CAN BE SAFELY CONNECTED TO THE APPARATUS. (REF. TABLE III)
11. FOR INTRINSIC SAFETY (NON-FISCO) INSTALLATION:
ANY SINGLE SHUNT ZENER DIODE SAFETY BARRIER APPROVED BY FM HAVING THE FOLLOWING OUTPUT PARAMETERS:
Voc OR Vt NOT GREATER THAN 30 V FOR FF, FI AND HT OPTIONS
Isc OR It NOT GREATER THAN 300 mA FOR FF AND FI OPTIONS, OR 200 mA FOR HT OPTION
Pmax NOT GREATER THAN 1.3 W FOR FF AND FI OPTIONS, OR 0.9 mW FOR HT OPTION.
10. INTEGRAL PREAMPLIFIER: A WEATHER RESISTANT ENCLOSURE MUST BE USED, USE THE 273546-00 PREAMPLIFIER. OTHER PREAMPS OR PREAMP CONTAINING SENSORS MAY BE USED IF OVERALL C AND L ARE < THE LIMITS DETAILED IN NOTE 9 AND THE MAXIMUM ENITY PARAMETERS ARE > THOSE IN TABLE II.
9. THE 5081 P/A INCLUDES INTEGRAL PREAMPLIFIER CIRCUITRY. AN EXTERNAL PREAMPLIFIER MAY ALSO BE USED, THE OUTPUT PARAMETERS SPECIFIED IN TABLE II ARE VALID FOR EITHER PREAMPLIFIER, THE CAPACITANCE AND INDUCTANCE OF THE LOAD CONNECTED TO THE SENSOR TERMINALS MUST NOT EXCEED THE VALUES SPECIFIED IN TABLE II. FOR EXAMPLE, FOR A 5081-P-A-FF/HT-69 WITH 23546-00 PREAMPLIFIER, THE MAXIMUM ALLOWABLE CABLE CAPACITANCE AND INDUCTANCE WITH THE ENTITY PARAMETERS OF THE PREAMPLIFIER REQUIREMENTS OF SIMPLE APPARATUS AS DEFINED IN ANSI/ISA RP12.6 AND THE NEC, ANSI/NFPA 70, THEY CANNOT GENERATE NOR STORE MORE THAN 1.5V, 0.1mA, 25mW OR A PASSIVE COMPONENT THAT DOES NOT DISSIPATE MORE THAN 1.3W, SEE TABLES I AND II.
8. THE CONFIGURATION OF ASSOCIATED APPARATUS MUST BE CSA APPROVED UNDER THE ASSOCIATED CONCEPT AND BE RESISTIVELY LIMITED HAVING LINEAR OUTPUTS.
7. CONNECTION SHALL BE MADE TO CSA APPROVED ASSOCIATED APPARATUS MUST USE OR GENERATE MORE THAN 250 Vrms, OR Vdc.
6. ASSOCIATED APPARATUS MANUFACTURER'S INSTALLATION DRAWING MUST BE FOLLOWED WHEN INSTALLING THIS EQUIPMENT.
5. THE ENTITY CONCEPT ALLOWS INTERCONNECTION OF INTRINSICALLY SAFE APPARATUS WITH ASSOCIATED APPARATUS WHEN THE FOLLOWING IS TRUE:

ASSOCIATED APPARATUS OUTPUT		FIELD DEVICE INPUT
Voc OR Vt	≥	Vmax OR Ui
Isc OR It	≥	Imax OR Ii
Pmax OR Pi	≥	Po
Ci + Ccable	≤	Co, Ca OR Co
Li + Lcable	≤	Lo, La OR Lo

4. RESISTANCE BETWEEN INTRINSICALLY SAFE GROUND AND EARTH GROUND MUST BE LESS THAN 1.0 Ohm.
3. DUST-TIGHT CONDUIT SEAL MUST BE USED WHEN INSTALLED IN CLASS II AND CLASS III ENVIRONMENTS.
2. INSTALLATION SHOULD BE IN ACCORDANCE WITH ANSI/ISA RP12.06.01 "RECOMMENDED PRACTICE FOR INTRINSICALLY SAFE SYSTEMS FOR HAZARDOUS (CLASSIFIED) LOCATIONS"
1. (EXCEPT CHAPTER 5 FOR FISCO INSTALLATIONS) AND THE CANADIAN ELECTRICAL CODE (CSA C22.1).

NOTES: UNLESS OTHERWISE SPECIFIED

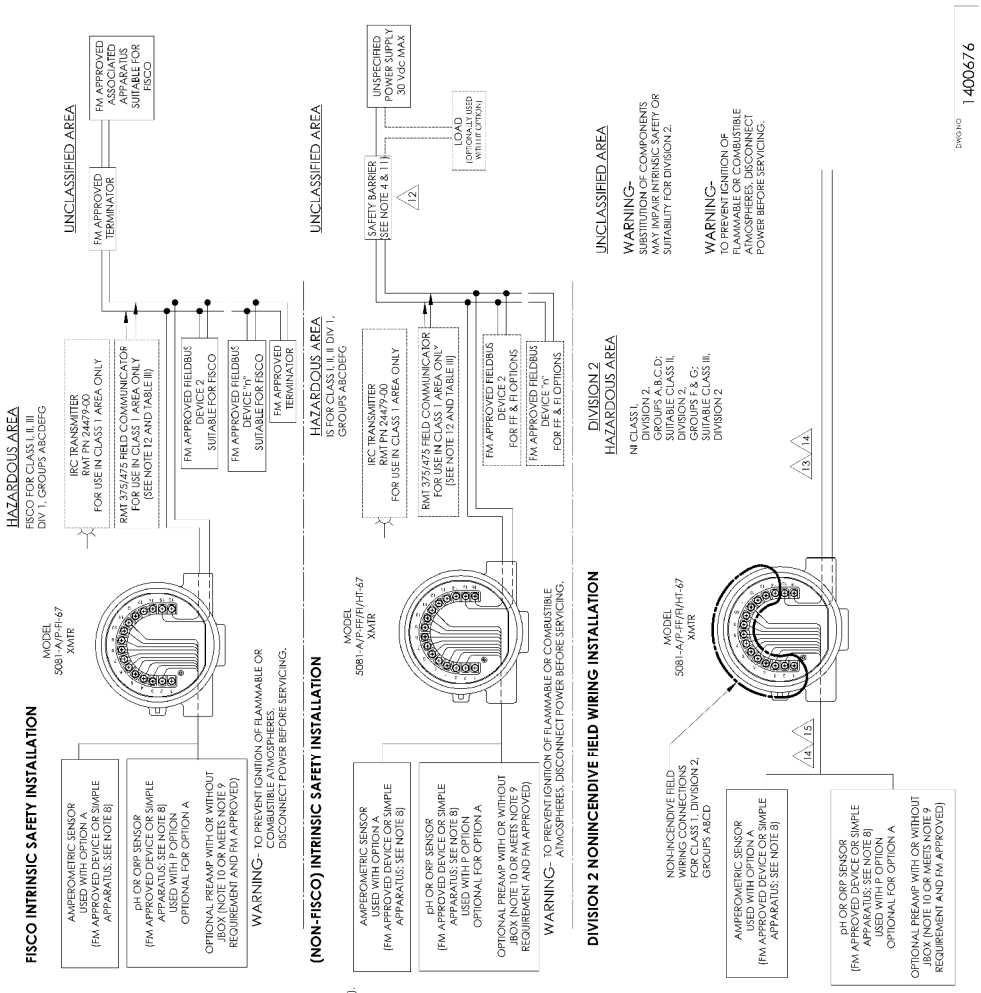

TABLE I

GAS GROUPS	5081-A/P OUTPUT PARAMETERS Co [µF]		Lo [mH]
	H / FI		III
A, B	0.96	3.1	7.5
C	5.99	12.3	9.8
D	21.69	25	19.8

TABLE II

OUTPUT PARAMETERS	5081 A/P INTRINSIC OUTPUT GROUPS I THRU I / 2	
	H / FI	III
Vt	13.02 Vdc	13.02 Vdc
It	105.44 mA	130 mA
Pt	1.47 mW	192 mW

TABLE III

5081-A/P INPUT PARAMETERS, SUPPLY/SIGNAL TERMINALS, TB1 PINS 15 & 16

OPTIONS	Vmax(Voc)	Imax (mA)	Pmax (W)	Ci (nF)	Li (mH)	Voc MAX (Vdc)	Isc MAX (mA)
FI (FISCO) GROUP IIB/CDEFG	17.5	380	5.32	5	10		
FF (FISCO) GROUP IIC/ABCDEFG	17.5	380	5.32	5	10		
FF (NON-FISCO)	30	300	2.52	27.8	10		
HT (NON-FISCO)	30	200	0.9	27.8	0		
375/475	PER FF PARAMETERS						
	30	300	1	00	0.0	1.9	39

17. THE CAPACITANCE AND INDUCTANCE CONNECTED TO THE SENSOR TERMINALS MUST NOT EXCEED THE VALUES SPECIFIED IN TABLE I.
16. NO REVISION TO DRAWING WITHOUT FM APPROVAL.
/15. NON-INCENDIVE FIELD WIRING METHODS MAY BE USED FOR CONNECTING SENSORS TO THE INSTRUMENT. ATTACHED SENSORS MUST BE FM APPROVED AS NON-INCENDIVE FOR CLASS 1, DIVISION 2, GROUPS ABCD WITH INPUT VALUES OF Vmax AND Imax ≥ Voc (Vt) AND Isc (It) LISTED IN TABLE II AND THE Ci AND Li OF THE SENSOR AND INTERCONNECTED WIRING MUST BE ≤ Co AND Lo LISTED IN TABLE 1 OR BE CLASSIFIED AS "SIMPLE APPARATUS". SIMPLE APPARATUS ARE DEVICES WHICH ARE INCAPABLE OF GENERATING OR STORING MORE THAN 1.2 V, 0.1 A, 25 mW OR 20 µJ. (AMPEROMETRIC SENSORS WITHOUT PREAMP QUALIFY AS SIMPLE APPARATUS).
/14. INSTALLATION TO BE IN ACCORDANCE WITH THE NATIONAL ELECTRICAL CODE.
/13. DIVISION 2 WIRING METHOD PER THE NEC (EXCLUDING NONINCENDIVE FIELD WIRING).
/12. INTRINSICALLY SAFE APPARATUS (5081, IRC TRANSMITTER, 375/475 FIELD COMMUNICATOR, FIELDBUS TERMINATOR OR ANY OTHER FIELDBUS DEVICES) AND ASSOCIATED APPARATUS (SAFETY BARRIER) SHALL MEET THE FOLLOWING REQUIREMENTS: THE VOLTAGE (Vmax) AND CURRENT (Imax) OF THE INTRINSICALLY SAFE APPARATUS MUST BE LESS THAN OR EQUAL TO (≤) THE VOLTAGE (Voc) AND CURRENT (Isc) OUTPUT WHICH CAN BE DELIVERED BY THE ASSOCIATED APPARATUS (SAFETY BARRIER). IN ADDITION, THE MAXIMUM UNPROTECTED CAPACITANCE (Ci) AND INDUCTANCE (Li) OF THE INTRINSICALLY SAFE APPARATUS INCLUDING INTERCONNECTING WIRING, MUST BE EQUAL OR LESS THAN THE CAPACITANCE (Co) AND INDUCTANCE (Lo) WHICH CAN BE SAFELY CONNECTED TO THE APPARATUS. (REF. TABLE III)
11. FOR INTRINSIC SAFETY (NON-FISCO) INSTALLATION, ANY SINGLE SHUNT ZENER DIODE SAFETY BARRIER APPROVED TO THE FOLLOWING PARAMETERS MAY BE USED IN THE SENSOR SUPPLY/SIGNAL TERMINALS ON TB1, PINS 15 AND 16.
Voc OR Vt NOT GREATER THAN 30 V FOR FF, FI AND HT OPTIONS
Isc OR It NOT GREATER THAN 300 mA FOR FF AND FI OPTIONS, OR 200 mA FOR HT OPTION
Pmax NOT GREATER THAN 1.3 W FOR FF AND FI OPTIONS, OR 0.9 mW FOR HT OPTION
10. PREAMPLIFIER PART NUMBER 24244-00 (SEE DRAWING 24244-00) MAY BE USED TO CONNECT 5081P,D,D2 INTEGRAL PREAMPHER. A WEATHER RESISTANT ENCLOSURE MUST HOUSE THE TYPE 23544-00 PREAMPLIFIER. OTHER PREAMPS OR PREAMP CONTAINING SENSORS MAY BE USED IF OVERALL C AND L ARE < THE LIMITS DETAILED IN NOTE 9 AND THE MAXIMUM ENTITY PARAMETERS ARE > THOSE IN TABLE II.
9. THE 5081-A/P INCLUDES INTEGRAL PREAMPLIFIER CIRCUITRY. AN EXTERNAL PREAMPLIFIER MAY ALSO BE USED. THE OUTPUT OF THE PREAMPLIFIER MUST BE LIMITED SUCH THAT THE SENSOR TERMINALS MUST NOT EXCEED THE VALUES SPECIFIED IN TABLE I WHERE Co > Ci (SENSOR) +Ccable AND Lo > Li(SENSOR) + Lcable.
8. SENSORS SHALL BE FM APPROVED IN ACCORDANCE WITH THE ENTITY REQUIREMENTS OR MEET THE REQUIREMENTS OF SIMPLE APPARATUS AS DEFINED IN ANSI/ISA RP12.6 AND THE NEC. ANSI/NFPA 70. THEY CAN DISSIPATE NOT MORE THAN 1.3 W. SEE TABLE I, II, III.
7. THE CONFIGURATION OF ASSOCIATED APPARATUS MUST BE FM APPROVED UNDER THE ASSOCIATED CONCEPT.
6. CONTROL EQUIPMENT CONNECTED TO ASSOCIATED APPARATUS MUST NOT USE OR GENERATE MORE THAN 250 Vrms OR Vdc.
5. ASSOCIATED APPARATUS MANUFACTURER'S INSTALLATION DRAWING MUST BE FOLLOWED WHEN INSTALLING THIS EQUIPMENT.
4. THE ENTITY CONCEPT ALLOWS INTERCONNECTION OF INTRINSICALLY SAFE APPARATUS WITH ASSOCIATED APPARATUS WHEN THE FOLLOWING IS TRUE:

FIELD DEVICE INPUT	≥	ASSOCIATED APPARATUS OUTPUT
Vmax OR Ui	≥	Voc, Vt OR Uo
Imax OR Ii	≥	Isc, It OR Io
Pmax OR Pi	≥	Po
Ci + 3Ccable	≤	Co, C1 OR Co (FOR FISCO INSTALLATIONS)
Li + 3Lcable	≤	Lo, Lt OR Lo; Lc/Rc ≤ Lo/Ro OR Lo/Ro) AND Li/Ri ≤ (Lo/Ro OR Lo/Ro) (FOR FISCO INSTALLATIONS)
Ci + Ccable	≤	Co, C1 OR Co (FOR FISCO INSTALLATIONS)
Li + Lcable	≤	Lo, Lt OR Lo (FOR FIELDBUS, NON-FISCO) INSTALLATIONS)
Ci + Ccable	≤	Co, C1 OR Co (FOR FIELDBUS, NON-FISCO) INSTALLATIONS)

3. RESISTANCE BETWEEN INTRINSICALLY SAFE GROUND AND EARTH GROUND MUST BE LESS THAN 1.0 Ohm.
2. DUST-TIGHT CONDUIT SEAL MUST BE USED WHEN INSTALLED IN CLASS II AND CLASS III ENVIRONMENTS.
1. INSTALLATION SHOULD BE IN ACCORDANCE WITH ANSI/ISA RP12.06 "INSTALLATION OF INTRINSICALLY SAFE SYSTEMS FOR HAZARDOUS (CLASSIFIED) LOCATIONS" EXCEPT CHAPTER 5 FOR FISCO INSTALLATIONS) AND THE NATIONAL ELECTRICAL CODE (ANSI/NFPA 70)SECTIONS 504 AND 505.

NOTES: UNLESS OTHERWISE SPECIFIED

TABLE I

GAS GROUPS	C OPTION OUTPUT PARAMETERS		
	Ca (µf)	La (mH)	
		FF / FI	HT
A, B	12.05	0.4	0.5
C	490.05	1.6	2.0
D	9990.05	3.1	3.7

TABLE II

C OPTION OUTPUT PARAMETERS	5081C TB1, PINS 1 THRU 12	
	FF / FI	HT
Vt	6.51 Vdc	6.51 Vdc
It	302.59 mA	280 mA
Pt	365 mW	442 mW

TABLE III

5081C/T INPUT PARAMETERS, SUPPLY/SIGNAL TERMINALS, TB1 PINS 15 & 16						Voc MAX OUT: (Vdc)	Isc MAX OUT: (mA)
OPTIONS	Vmax(Vcc)	Imax (mA)	Pmax (W)	Ci (nF)	Li (Uh)		
FI (FISCO) GROUPS IIB/CDEFG	17.5	380	5.32	5	10		
FI (FISCO) GROUPS IIC/ABCDEFG	17.5	360	2.52	5	10		
FF/FI (NON-FISCO)	30	300	1.3	27.8	0		
HT (NON-FISCO)	30	200	0.9	27.8	0		
ENTITY PARAMETERS: FIELD COMMUNICATOR							
375/475	30	200	1	.00	0.0	1.9	32

17. FOR THE C OPTION, THE CAPACITANCE AND INDUCTANCE CONNECTED TO THE SENSOR TERMINALS MUST NOT EXCEED THE VALUES SPECIFIED IN TABLE I.

16. FOR C OPTION, SENSORS SHALL BE FM APPROVED IN ACCORDANCE WITH THE ENTITY REQUIREMENTS OR MEET THE REQUIREMENTS OF SIMPLE APPARATUS AS DEFINED IN ANSI/ISA RP12.6 AND THE NEC, ANSI/NFPA 70. THEY CANNOT GENERATE NOR STORE MORE THAN 1.5V, 0.1mA, 25mW OR A PASSIVE COMPONENT THAT DOES NOT DISSIPATE MORE THAN 1.3W. SEE TABLES I AND II.

△15 NON-INCENDIVE FIELD WIRING METHODS MAY BE USED FOR CONNECTING SENSORS TO THE INSTRUMENT. ATTACHED SENSORS MUST BE FM APPROVED AS NON-INCENDIVE FOR CLASS 1,DIVISION 2, GROUPS ABCD WITH INPUT VALUES OF Vmax AND Imax ≥ Voc (Vt) AND Isc (It) LISTEDIN TABLE II AND THE Ci AND Li OF THE SENSOR AND INTERCONNECTED WIRING MUST BE ≤ Ca AND La LISTED IN TABLE I OR BE CLASSIFIED AS "SIMPLE APPARATUS". SIMPLE APPARATUS ARE DEVICES WHICH ARE INCAPABLE OF GENERATING OR STORING MORE THAN 1.2 V, 0.1 A, 25 mW OR 20 µJ (CONTACTING CONDUCTIVITY SENSORS QUALIFY AS SIMPLE APPARATUS).

△14 INSTALLATION TO BE IN ACCORDANCE WITH THE NATIONAL ELECTRICAL CODE.

△13 DIVISION 2 WIRING METHOD PER THE NEC (EXCLUDING NONINCENDIVE FIELD WIRING).

△12 INTRINSICALLY SAFE APPARATUS (5081, IRC TRANSMITTER, 375/475 FIELD COMMUNICATOR, FIELDBUS TERMINATOR OR ANY OTHER FIELDBUS DEVICES) AND ASSOCIATED APPARATUS (SAFETY BARRIER) SHALL MEET THE FOLLOWING REQUIREMENTS: THE VOLTAGE (Vmax) AND CURRENT (Imax) OF THE INTRINSICALLY SAFE APPARATUS MUST BE EQUAL TO OR GREATER THAN THE VOLTAGE (Voc OR Vt) AND CURRENT (Isc OR It) WHICH CAN BE DELIVERED BY THE ASSOCIATED APPARATUS (SAFETY BARRIER). IN ADDITION, THE MAXIMUM UNPROTECTED CAPACITANCE (Ci) AND INDUCTANCE (Li) OF THE INTRINSICALLY SAFE APPARATUS, INCLUDING INTERCONNECTING WIRING, MUST BE EQUAL OR LESS THAN THE CAPACITANCE (Ca) AND INDUCTANCE (La) WHICH CAN BE SAFELY CONNECTED TO THE APPARATUS. (REF. TABLE III)

△11 FOR (NON-FISCO) INTRINSIC SAFETY INSTALLATION, ANY SINGLE SHUNT ZENER DIODE SAFETY BARRIER APPROVED BY FM HAVING THE FOLLOWING OUTPUT PARAMETERS:
SUPPLY/SIGNAL TERMINALS ON TB1, PINS 15 AND 16.
Voc OR Vt NOT GREATER THAN 30 V FOR FF, FI AND HT OPTIONS
Isc OR It NOT GREATER THAN 300 mA FOR FF AND FI OPTIONS, OR 200 mA FOR HT OPTION
Pmax NOT GREATER THAN 1.3 W FOR FF AND FI OPTIONS, OR 0.9 mW FOR HT OPTION.

△10 FOR T OPTION, MAXIMUM CABLE LENGTH IS 250 FEET.

9. USE SUPPLY WIRES SUITABLE FOR 5°C ABOVE SURROUNDING AMBIENT.
8. NO REVISION TO DRAWING WITHOUT PRIOR FM APPROVAL.
7. THE CONFIGURATION OF ASSOCIATED APPARATUS MUST BE FM APPROVED UNDER THE ASSOCIATED CONCEPT.

6. CONTROL EQUIPMENT CONNECTED TO ASSOCIATED APPARATUS MUST NOT USE OR GENERATE MORE THAN 250 Vrms OR Vdc.

5. ASSOCIATED APPARATUS MANUFACTURER'S INSTALLATION DRAWING MUST BE FOLLOWED WHEN INSTALLING THIS EQUIPMENT.

4. THE ENTITY CONCEPT ALLOWS INTERCONNECTION OF INTRINSICALLY SAFE APPARATUS WITH ASSOCIATED APPARATUS WHEN THE FOLLOWING IS TRUE:

FIELD DEVICE INPUT		ASSOCIATED APPARATUS OUTPUT
Vmax OR Ui	≥	Voc, Vt OR Uo
Imax OR Ii	≥	Isc, It OR Io
Pmax OR Pi	≥	Po
3Ci + 3Ccable	≤	Ca, Ct OR Co (FOR FISCO INSTALLATIONS)
3Li + 3Lcable (FOR FISCO INSTALLATIONS)	≤	La, Lt OR Lo; Lc/Rc ≤ (La/Ra OR Lo/Ro) AND Li/Ri ≤ (La/Ra OR Lo/Ro)
Ci + Ccable	≤	Ca, Ct OR Co (FOR FIELDBUS (NON-FISCO) INSTALLATIONS)
Li + Lcable	≤	La, Lt OR Lo (FOR FIELDBUS (NON-FISCO) INSTALLATIONS)

3. RESISTANCE BETWEEN INTRINSICALLY SAFE GROUND AND EARTH GROUND MUST BE LESS THAN 1.0 Ohm.

2. DUST-TIGHT CONDUIT SEAL MUST BE USED WHEN INSTALLED IN CLASS II AND CLASS III ENVIRONMENTS.

1. INSTALLATION SHOULD BE IN ACCORDANCE WITH ANSI/ISA RP12.06 "INSTALLATION OF INTRINSICALLY SAFE SYSTEMS FOR HAZARDOUS (CLASSIFIED) LOCATIONS" (EXCEPT CHAPTER 5 FOR FISCO INSTALLATIONS) AND THE NATIONAL ELECTRICAL CODE (ANSI/NFPA 70) SECTIONS 504 AND 505.

NOTES: UNLESS OTHERWISE SPECIFIED

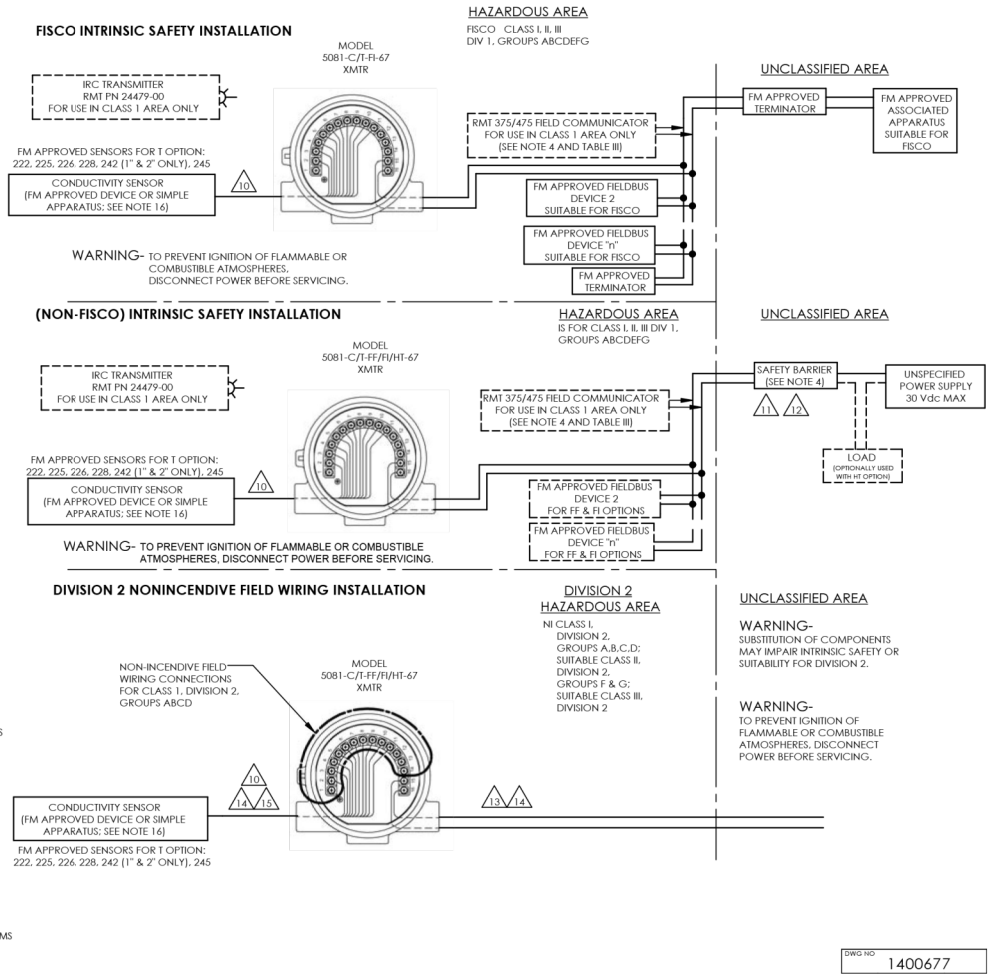

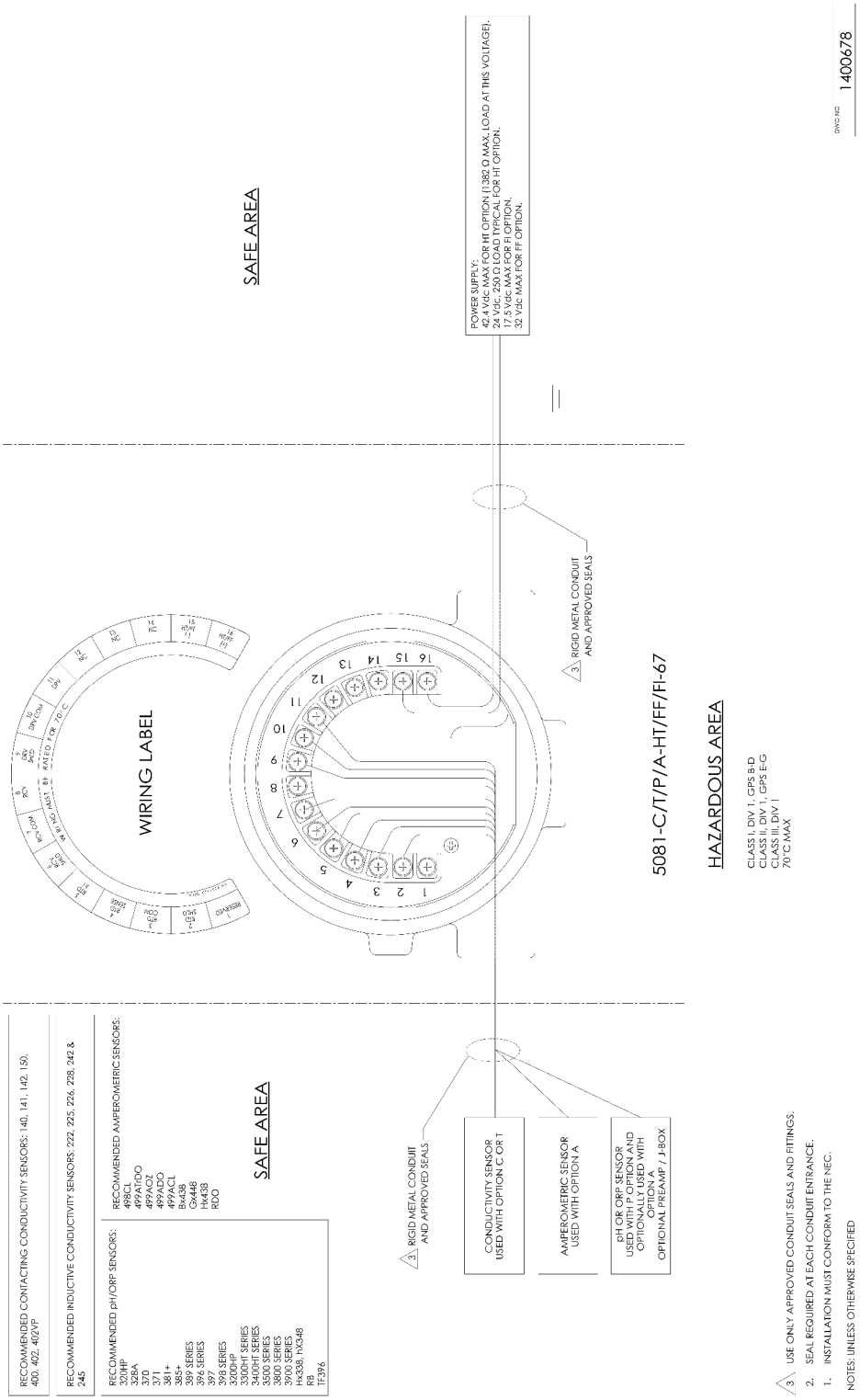
RECOMMENDED CONTACTING CONDUCTIVITY SENSORS: 140, 141, 142, 150, 400, 402, 402VP
RECOMMENDED INDUCTIVE CONDUCTIVITY SENSORS: 222, 225, 226, 228, 242 & 245
RECOMMENDED pH/ORP SENSORS:
320HP
328A
370
371
381+
385+
389 SERIES
396 SERIES
397
398 SERIES
3200HT SERIES
3300HT SERIES
3400HT SERIES
3500 SERIES
3800 SERIES
3900 SERIES
Hx438, hX348
PER
TF396
RECOMMENDED AMPEROMETRIC SENSORS:
498CL
499AtDO
499AOZ
499ADO
499ACL
Rx455
Cx448
Hx438
RDO
SAFE AREA
WIRING LABEL
SAFE AREA
3. RIGID METAL CONDUIT AND APPROVED SEALS
CONDUCTIVITY SENSOR USED WITH OPTION C OR T
AMPEROMETRIC SENSOR USED WITH OPTION A
pH OR ORP SENSOR USED WITH P OPTION AND OPTIONALLY USED WITH OPTION A
OPTIONAL PREAMP / J-BOX
POWER SUPPLY:
42.4 Vdc MAX FOR HT OPTION (1382 Ω MAX. LOAD AT THIS VOLTAGE).
24 Vdc, 250 Ω LOAD TYPICAL FOR HT OPTION.
17.5 Vdc MAX FOR FI OPTION.
32 Vdc MAX FOR FF OPTION.
3. RIGID METAL CONDUIT AND APPROVED SEALS
5081-C/T/P/A-HT/FF/FI-67
HAZARDOUS AREA
CLASS I, DIV 1, GPS B-D
CLASS II, DIV 1, GPS E-G
CLASS III, DIV 1
70°C MAX
3. USE ONLY APPROVED CONDUIT SEALS AND FITTINGS.
2. SEAL REQUIRED AT EACH CONDUIT ENTRANCE.
1. INSTALLATION MUST CONFORM TO THE NEC.
NOTES: UNLESS OTHERWISE SPECIFIED
DWG NO 1400678

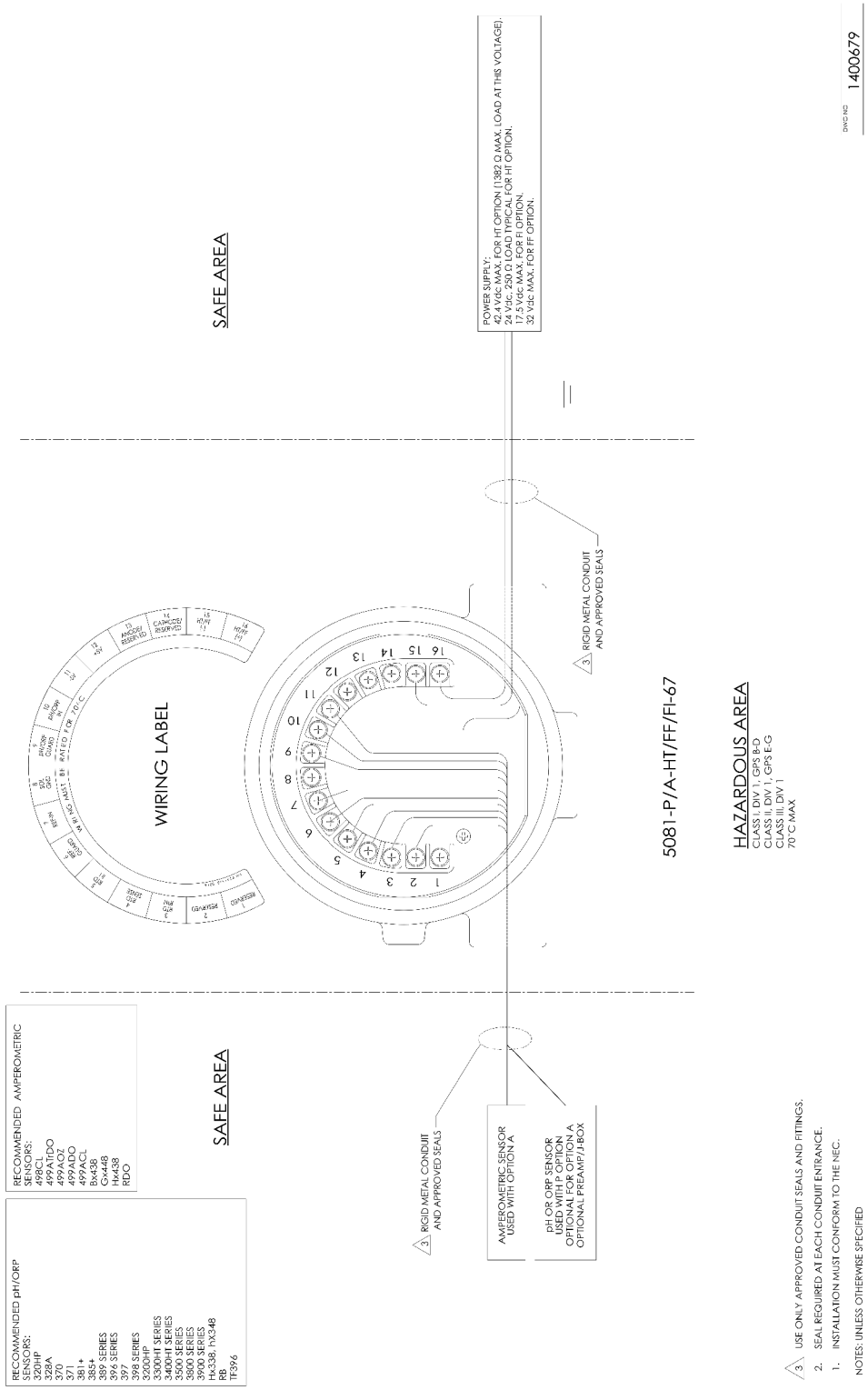
RECOMMENDED pH/ORP SENSORS:
320HP
328A
370
371
381+
383+
389 SERIES
396 SERIES
397
398 SERIES
3300HT
3300HT SERIES
3400HT SERIES
3500 SERIES
3800 SERIES
3900 SERIES
HX338, hX348
RB
TF396
RECOMMENDED AMPEROMETRIC SENSORS:
498CL
499ATrDO
499AOZ
499ADO
499ACL
BxA38
GxA48
HxA38
RDO
SAFE AREA
WIRING LABEL
SAFE AREA
3. RIGID METAL CONDUIT AND APPROVED SEALS
AMPEROMETRIC SENSOR USED WITH OPTION A
pH OR ORP SENSOR USED WITH P OPTION OPTIONAL FOR OPTION A OPTIONAL PREAMP/J-BOX
POWER SUPPLY:
42.4 Vdc MAX. FOR HT OPTION (1382 Ω MAX. LOAD AT THIS VOLTAGE).
24 Vdc, 250 Ω LOAD TYPICAL FOR HT OPTION.
17.5 Vdc MAX. FOR FI OPTION.
32 Vdc MAX. FOR FF OPTION.
3. RIGID METAL CONDUIT AND APPROVED SEALS
5081-P/A-HT/FF/FI-67
HAZARDOUS AREA
CLASS I, DIV 1, GPS B-D
CLASS II, DIV 1, GPS E-G
CLASS III, DIV 1
70° C MAX
3. USE ONLY APPROVED CONDUIT SEALS AND FITTINGS.
2. SEAL REQUIRED AT EACH CONDUIT ENTRANCE.
1. INSTALLATION MUST CONFORM TO THE NEC.
NOTES: UNLESS OTHERWISE SPECIFIED
DWG NO 1400679

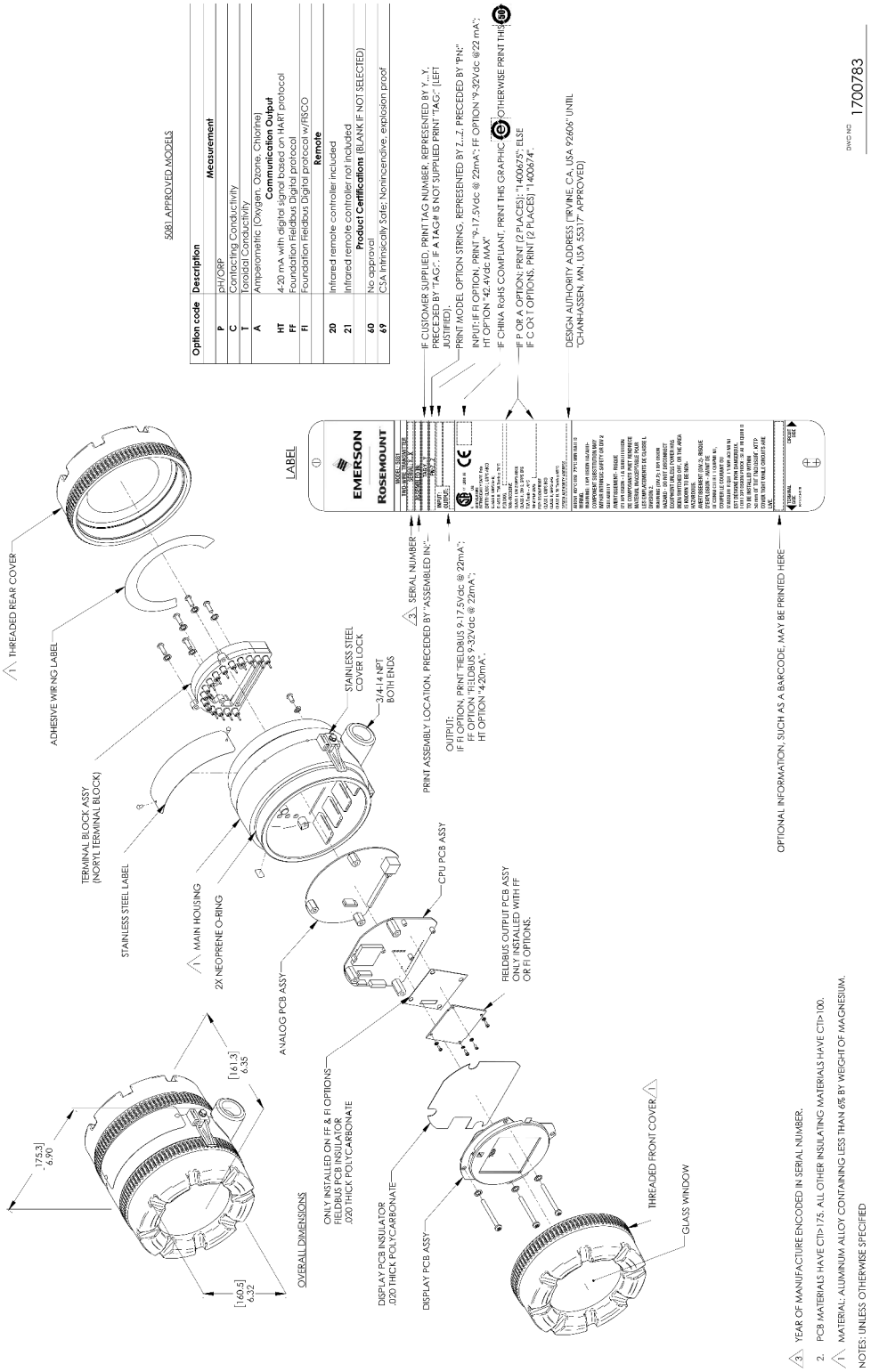
5081 APPROVED MODELS
Option code
Description
Measurement
P
pH/ORP
C
Contacting Conductivity
T
Toroidal Conductivity
A
Amperometric (Oxygen, Ozone, Chlorine)
Communication Output
HT
4-20 mA with digital signal based on HART protocol
FF
Foundation Fieldbus Digital protocol
FI
Foundation Fieldbus Digital protocol w/FISCO
Remote
20
Infrared remote controller included
21
Infrared remote controller not included
Product Certifications (BLANK IF NOT SELECTED)
60
No approval
69
CSA Intrinsically Safe; Nonincendive, explosion proof
LABEL
EMERSON
ROSEMOUNT
IF CUSTOMER SUPPLIED, PRINT TAG NUMBER, REPRESENTED BY X...X, PRECEDED BY "TAG:". IF A TAG# IS NOT SUPPLIED PRINT "TAG:" (LEFT JUSTIFIED).
PRINT MODEL OPTION STRING, REPRESENTED BY Z...Z, PRECEDED BY "PN#".
INPUT: IF FI OPTION, PRINT "9-17.5Vdc @ 22mA"; IF FF OPTION "9-32Vdc @22 mA"; HT OPTION "42.4Vdc MAX".
IF CHINA RoHS COMPLIANT, PRINT THIS GRAPHIC
OTHERWISE PRINT THIS
IF P OR A OPTION: PRINT (2 PLACES): "1400675"; ELSE IF C OR T OPTIONS, PRINT (2 PLACES) "1400674".
DESIGN AUTHORITY ADDRESS: "IRVINE, CA, USA 92606" UNTIL "CHANHASSEN, MN, USA 55317" APPROVED)
PRINT ASSEMBLY LOCATION, PRECEDED BY "ASSEMBLED IN:"
SERIAL NUMBER
OUTPUT:
IF FI OPTION, PRINT "FIELDBUS 9-17.5Vdc @ 22mA";
FF OPTION "FIELDBUS 9-32Vdc @ 22mA";
HT OPTION "4-20mA".
OPTIONAL INFORMATION, SUCH AS A BARCODE, MAY BE PRINTED HERE
DWG NO 1700783
THREADED REAR COVER
ADHESIVE WIRING LABEL
TERMINAL BLOCK ASSY (NORYL TERMINAL BLOCK)
STAINLESS STEEL LABEL
MAIN HOUSING
2X NEOPRENE O-RING
ANALOG PCB ASSY
STAINLESS STEEL COVER LOCK
3/4-14 NPT BOTH ENDS
CPU PCB ASSY
FIELDBUS OUTPUT PCB ASSY ONLY INSTALLED WITH FF OR FI OPTIONS.
ONLY INSTALLED ON FF & FI OPTIONS
FIELDBUS PCB INSULATOR
.020 THICK POLYCARBONATE
DISPLAY PCB INSULATOR
.020 THICK POLYCARBONATE
DISPLAY PCB ASSY
THREADED FRONT COVER
GLASS WINDOW
OVERALL DIMENSIONS
[175.3] 6.90
[161.3] 6.35
[140.5] 6.22
3. YEAR OF MANUFACTURE ENCODED IN SERIAL NUMBER.
2. PCB MATERIALS HAVE CTI>175. ALL OTHER INSULATING MATERIALS HAVE CTI>100.
1. MATERIAL: ALUMINUM ALLOY CONTAINING LESS THAN 6% BY WEIGHT OF MAGNESIUM.
NOTES: UNLESS OTHERWISE SPECIFIED

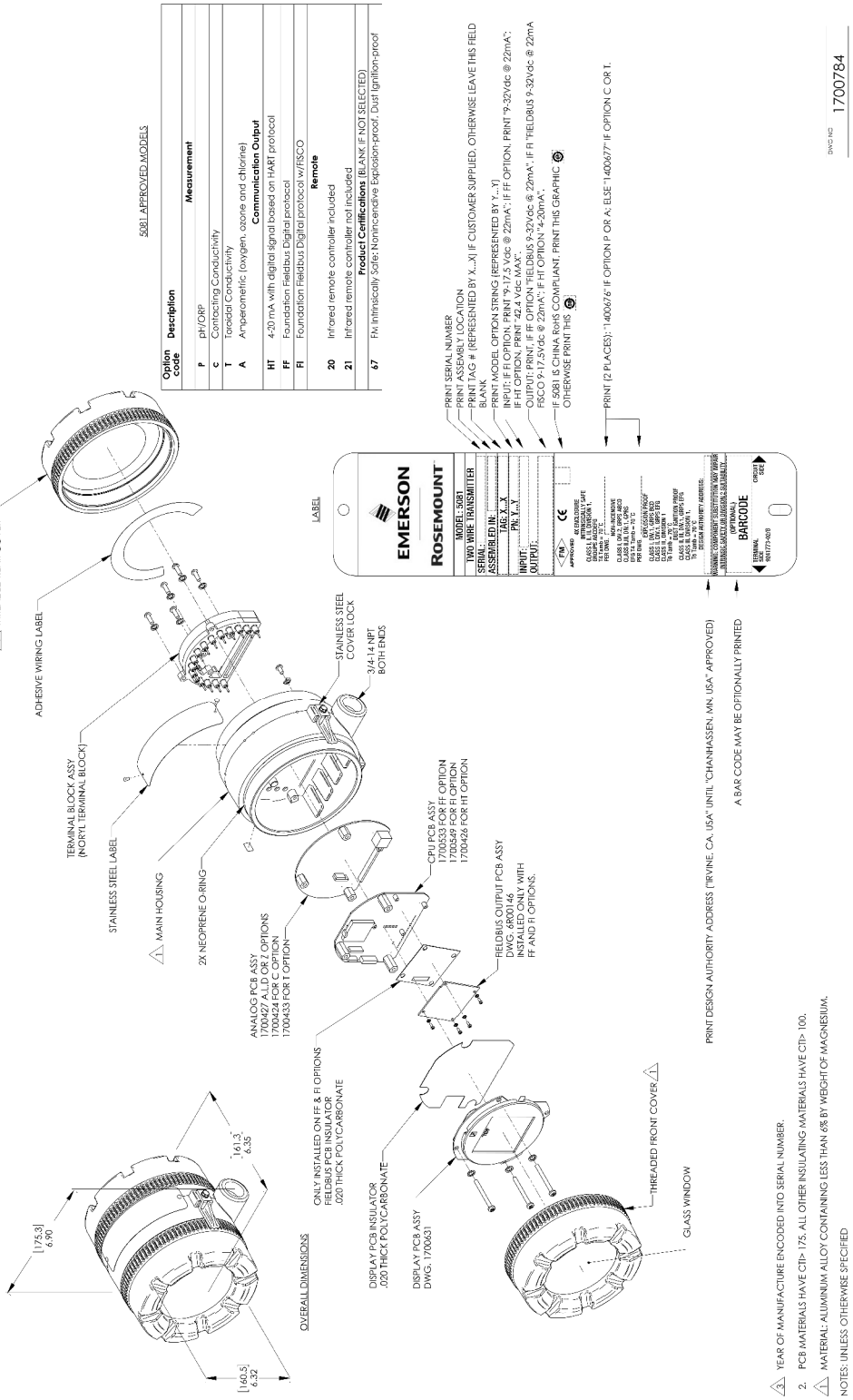
5081 APPROVED MODELS
Option code | Description | Measurement
P | pH/ORP
c | Contacting Conductivity
T | Toroidal Conductivity
A | Amperometric (oxygen, ozone and chlorine)
Communication Output
HT | 4-20 mA with digital signal based on HART protocol
FF | Foundation Fieldbus Digital protocol
FI | Foundation Fieldbus Digital protocol w/FISCO
Remote
20 | Infrared remote controller included
21 | Infrared remote controller not included
Product Certifications (BLANK IF NOT SELECTED)
67 | FM Intrinsically Safe; Nonincendive Explosion-proof, Dust Ignition-proof
THREADED REAR COVER
ADHESIVE WIRING LABEL
TERMINAL BLOCK ASSY (NORYL TERMINAL BLOCK)
STAINLESS STEEL LABEL
MAIN HOUSING
2X NEOPRENE O-RING
STAINLESS STEEL COVER LOCK
3/4-14 NPT BOTH ENDS
ANALOG PCB ASSY 1700427 ALLD OR Z OPTIONS 1700424 FOR C OPTION 1700433 FOR T OPTION
CPU PCB ASSY 1700533 FOR FF OPTION 1700549 FOR FI OPTION 1700426 FOR HT OPTION
FIELDBUS OUTPUT PCB ASSY DWG. 6R00146 INSTALLED ONLY WITH FF AND FI OPTIONS.
ONLY INSTALLED ON FF & FI OPTIONS FIELDBUS PCB INSULATOR .020 THICK POLYCARBONATE
DISPLAY PCB INSULATOR .020 THICK POLYCARBONATE
DISPLAY PCB ASSY DWG. 1700631
THREADED FRONT COVER
GLASS WINDOW
OVERALL DIMENSIONS
[175.3] 6.90
[161.3] 6.35
[160.5] 6.32
LABEL
EMERSON
ROSEMOUNT
MODEL: 5081
TWO WIRE TRANSMITTER
SERIAL:
ASSEMBLED IN:
TAG: X...X
PN: Y...Y
INPUT:
OUTPUT:
BARCODE
PRINT SERIAL NUMBER
PRINT ASSEMBLY LOCATION
PRINT TAG # (REPRESENTED BY X...X) IF CUSTOMER SUPPLIED, OTHERWISE LEAVE THIS FIELD BLANK
PRINT MODEL OPTION STRING (REPRESENTED BY Y...Y)
INPUT: IF FI OPTION, PRINT "9-17.5 Vdc @ 22mA"; IF FF OPTION, PRINT "9-32Vdc @ 22mA"; IF HT OPTION, PRINT "42.4 Vdc MAX".
OUTPUT: PRINT, IF FF OPTION "FIELDBUS 9-32Vdc @ 22mA", IF FI "FIELDBUS 9-32Vdc @ 22mA FISCO 9-17.5Vdc @ 22mA"; IF HT OPTION "4-20mA".
IF 5081 IS CHINA RoHS COMPLIANT, PRINT THIS GRAPHIC
OTHERWISE PRINT THIS
PRINT (2 PLACES): "1400676" IF OPTION P OR A; ELSE "1400677" IF OPTION C OR T.
PRINT DESIGN AUTHORITY ADDRESS ("IRVINE, CA, USA" UNTIL "CHANHASSEN, MN, USA" APPROVED)
A BAR CODE MAY BE OPTIONALLY PRINTED
DWG NO 1700784
YEAR OF MANUFACTURE ENCODED INTO SERIAL NUMBER.
2. PCB MATERIALS HAVE CTI> 175. ALL OTHER INSULATING MATERIALS HAVE CTI> 100.
MATERIAL: ALUMINUM ALLOY CONTAINING LESS THAN 6% BY WEIGHT OF MAGNESIUM.
NOTES: UNLESS OTHERWISE SPECIFIED

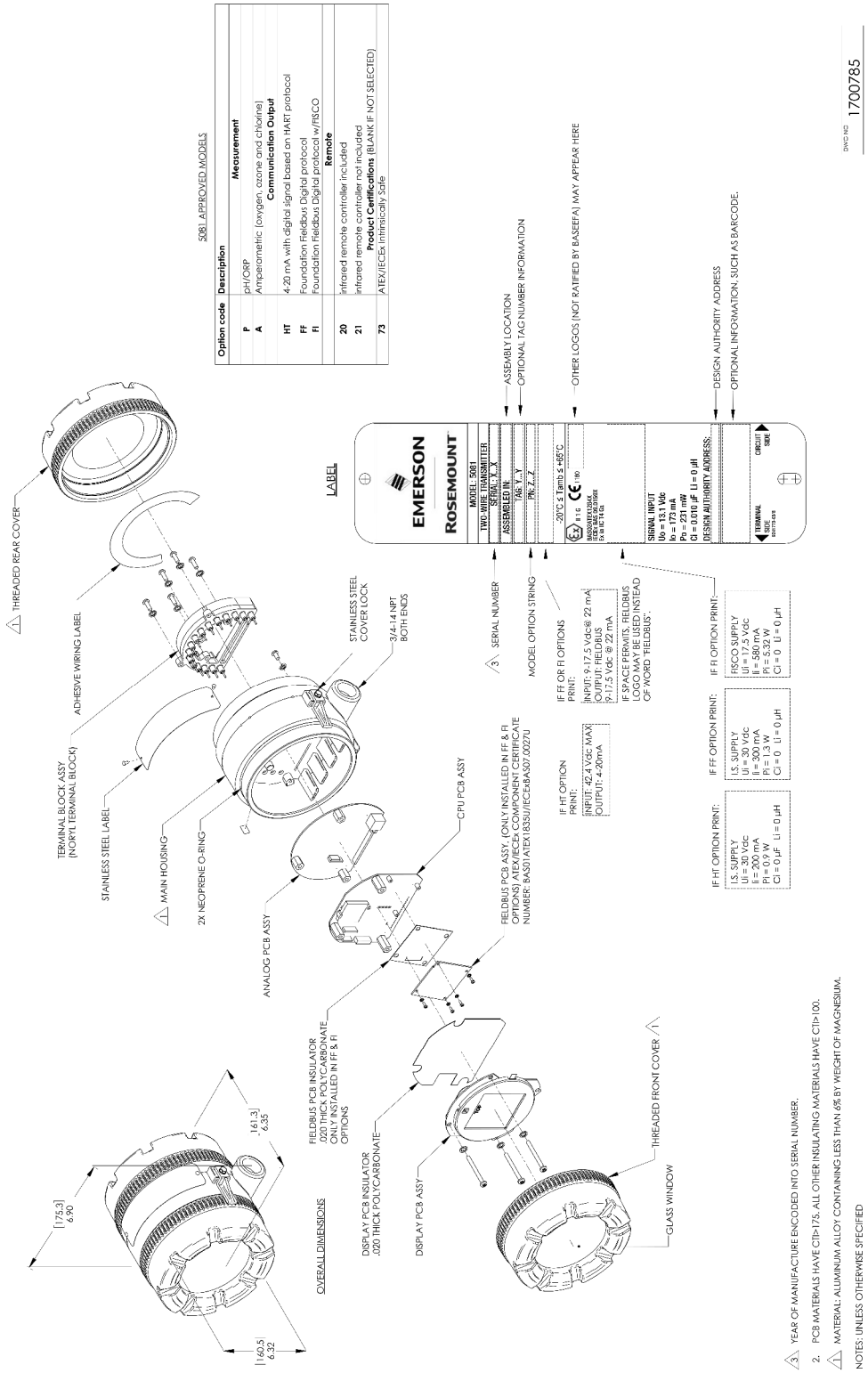
5081 APPROVED MODELS
Option code
Description
Measurement
P
pH/ORP
A
Amperometric (oxygen, ozone and chlorine)
Communication Output
HT
4-20 mA with digital signal based on HART protocol
FF
Foundation Fieldbus Digital protocol
FI
Foundation Fieldbus Digital protocol w/FISCO
Remote
20
Infrared remote controller included
21
Infrared remote controller not included
Product Certifications (BLANK IF NOT SELECTED)
73
ATEX/IECEx Intrinsically Safe
LABEL
EMERSON
ROSEMOUNT
MODEL : 5081
TWO WIRE TRANSMITTER
SERIAL : X_X
ASSEMBLED IN:
TAG: Y_Y
PN: Z_Z
-20°C ≤ Tamb ≤ +65°C
SIGNAL INPUT
Uo = 13.1 Vdc
Io = 77.1 mA
Po = 252 mW
Ci = 0.010 µF Li = 0 µH
DESIGN AUTHORITY ADDRESS:
TERMINAL SIDE
CIRCUIT SIDE
ASSEMBLY LOCATION
OPTIONAL TAG NUMBER INFORMATION
OTHER LOGOS (NOT RATIFIED BY BASEEFA) MAY APPEAR HERE
DESIGN AUTHORITY ADDRESS
OPTIONAL INFORMATION, SUCH AS BARCODE.
SERIAL NUMBER
MODEL OPTION STRING
IF FF OR FI OPTIONS PRINT:
INPUT: 9-17.5 Vdc@ 22 mA
OUTPUT: FIELDBUS
9-17.5 Vdc @ 22 mA
IF SPACE PERMITS, FIELDBUS LOGO MAY BE USED INSTEAD OF WORD "FIELDBUS".
IF HT OPTION PRINT:
INPUT: 42.4 Vdc MAX
OUTPUT: 4-20mA
IF HT OPTION PRINT:
IS. SUPPLY
Ui = 30 Vdc
Ii = 200 mA
Pi = 0.9 W
Ci = 0 µF Li = 0 µH
IF FF OPTION PRINT:
IS. SUPPLY
Ui = 30 Vdc
Ii = 300 mA
Pi = 1.3 W
Ci = 0 Li = 0 µH
IF FI OPTION PRINT:
FISCO SUPPLY
Ui = 17.5 Vdc
Ii = 380 mA
Pi = 5.32 W
Ci = 0 Li = 0 µH
THREADED REAR COVER
ADHESIVE WIRING LABEL
TERMINAL BLOCK ASSY (NORYL TERMINAL BLOCK)
STAINLESS STEEL LABEL
MAIN HOUSING
2X NEOPRENE O-RING
ANALOG PCB ASSY
STAINLESS STEEL COVER LOCK
3/4-14 NPT BOTH ENDS
CPU PCB ASSY
FIELDBUS PCB ASSY. (ONLY INSTALLED IN FF & FI OPTIONS) ATEX/IECEx COMPONENT CERTIFICATE NUMBER: BAS01ATEX1835U/IECExBAS07.0027U
FIELDBUS PCB INSULATOR .020 THICK POLYCARBONATE ONLY INSTALLED IN FF & FI OPTIONS
DISPLAY PCB INSULATOR .020 THICK POLYCARBONATE
DISPLAY PCB ASSY
THREADED FRONT COVER
GLASS WINDOW
OVERALL DIMENSIONS
175.3 6.90
161.3 6.35
160.5 6.32
3. YEAR OF MANUFACTURE ENCODED INTO SERIAL NUMBER.
2. PCB MATERIALS HAVE CTI>175. ALL OTHER INSULATING MATERIALS HAVE CTI>100.
1. MATERIAL: ALUMINUM ALLOY CONTAINING LESS THAN 6% BY WEIGHT OF MAGNESIUM.
NOTES: UNLESS OTHERWISE SPECIFIED
DWG NO 1700785

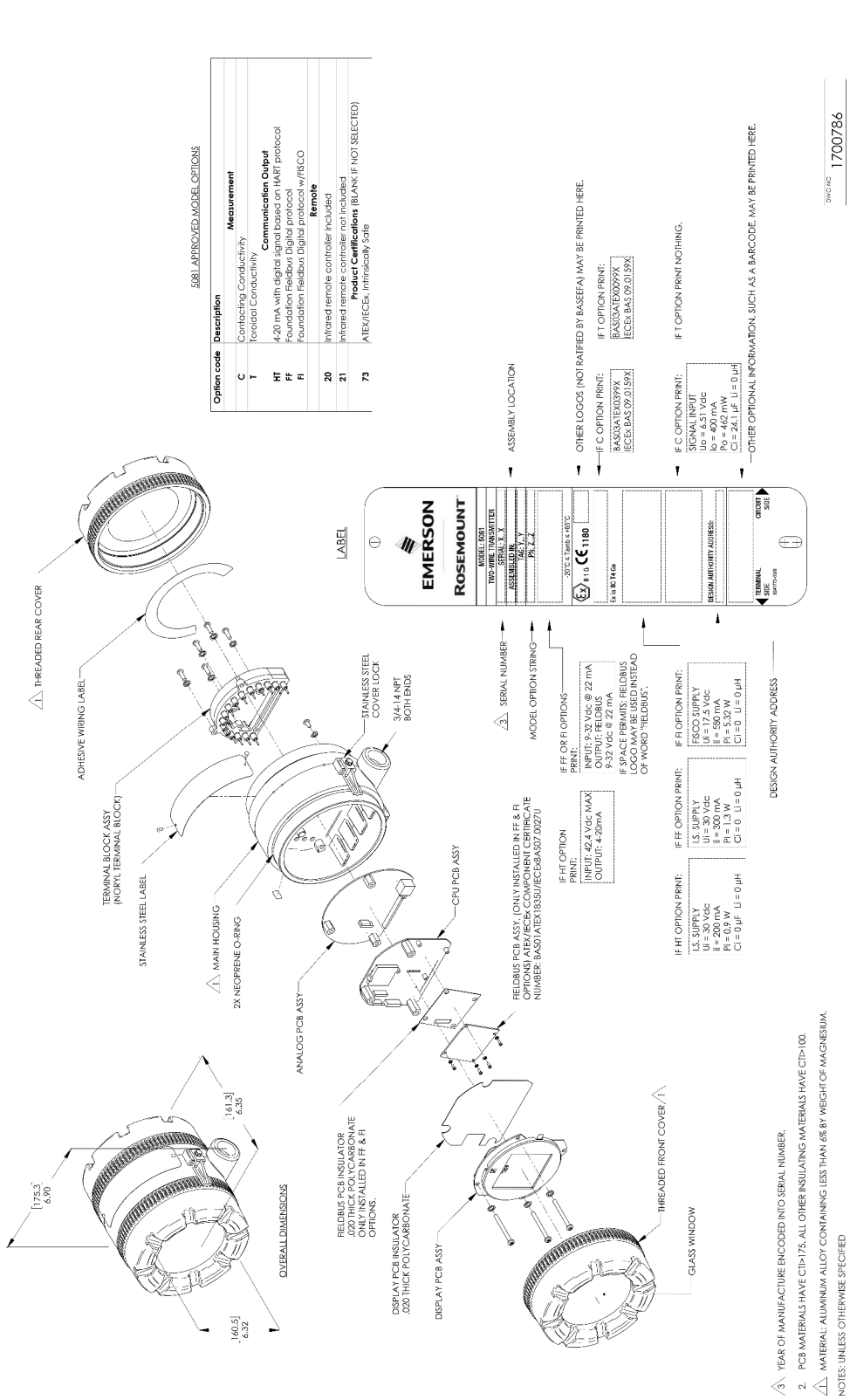
5081 APPROVED MODEL OPTIONS
Option code | Description
C | Contacting Conductivity
T | Toroidal Conductivity
Measurement
HT | 4-20 mA with digital signal based on HART protocol
FF | Foundation Fieldbus Digital protocol
FI | Foundation Fieldbus Digital protocol w/FISCO
Communication Output
20 | Infrared remote controller included
21 | Infrared remote controller not included
Remote
73 | ATEX/IECEx, Intrinsically Safe
Product Certifications (BLANK IF NOT SELECTED)
LABEL
EMERSON
ROSEMOUNT
MODEL: 5081
TWO-WIRE TRANSMITTER
SERIAL: X, X
ASSEMBLY IN:
TAG: Y, Y
PH: Z, Z
-20°C ≤ Tamb ≤ +65°C
Ex IIT1G CE 1180
Ex ia IIC T4 Ga
DESIGN AUTHORITY ADDRESS:
TERMINAL SIDE
CIRCUIT SIDE
ASSEMBLY LOCATION
OTHER LOGOS (NOT RATIFIED BY BASEEFA) MAY BE PRINTED HERE.
IF C OPTION PRINT:
BAS03ATEX0399X
IECEx BAS 09.0159X
IF T OPTION PRINT:
BAS03ATEX0099X
IECEx BAS 09.0159X
IF C OPTION PRINT:
SIGNAL INPUT
Uo = 6.51 Vdc
Io = 400 mA
Po = 462 mW
Ci = 24.1 µF Li = 0 µH
IF T OPTION PRINT NOTHING.
OTHER OPTIONAL INFORMATION, SUCH AS A BARCODE, MAY BE PRINTED HERE.
DWG NO 1700786
THREADED REAR COVER
ADHESIVE WIRING LABEL
TERMINAL BLOCK ASSY (NORYL TERMINAL BLOCK)
STAINLESS STEEL LABEL
MAIN HOUSING
2X NEOPRENE O-RING
STAINLESS STEEL COVER LOCK
3/4-14 NPT BOTH ENDS
ANALOG PCB ASSY
CPU PCB ASSY
FIELDBUS PCB ASSY, (ONLY INSTALLED IN FF & FI OPTIONS) ATEX/IECEx COMPONENT CERTIFICATE NUMBER: BAS01ATEX1835U/IECEx BAS07.0027U
IF HT OPTION PRINT:
INPUT: 42.4 Vdc MAX
OUTPUT: 4-20mA
IF FF OR FI OPTIONS PRINT:
INPUT: 9-32 Vdc @ 22 mA
OUTPUT: FIELDBUS
9-32 Vdc @ 22 mA
IF SPACE PERMITS: FIELDBUS LOGO MAY BE USED INSTEAD OF WORD "FIELDBUS".
IF HT OPTION PRINT:
I.S. SUPPLY
Ui = 30 Vdc
Ii = 200 mA
Pi = 0.9 W
Ci = 0 µF Li = 0 µH
IF FF OPTION PRINT:
I.S. SUPPLY
Ui = 30 Vdc
Ii = 300 mA
Pi = 1.3 W
Ci = 0 Li = 0 µH
IF FI OPTION PRINT:
FISCO SUPPLY
Ui = 17.5 Vdc
Ii = 580 mA
Pi = 5.32 W
Ci = 0 Li = 0 µH
DESIGN AUTHORITY ADDRESS
FIELDBUS PCB INSULATOR .020 THICK POLYCARBONATE ONLY INSTALLED IN FF & FI OPTIONS.
DISPLAY PCB INSULATOR .020 THICK POLYCARBONATE
DISPLAY PCB ASSY
THREADED FRONT COVER
GLASS WINDOW
OVERALL DIMENSIONS
[175.3] 6.90
[161.3] 6.35
[160.5] 6.32
3 YEAR OF MANUFACTURE ENCODED INTO SERIAL NUMBER.
2. PCB MATERIALS HAVE CTI>175. ALL OTHER INSULATING MATERIALS HAVE CTI>100.
1 MATERIAL: ALUMINUM ALLOY CONTAINING LESS THAN 6% BY WEIGHT OF MAGNESIUM.
NOTES: UNLESS OTHERWISE SPECIFIED

00809-0100-3581
Rev. AC
2019

GLOBAL HEADQUARTERS
Emerson Automation Solutions
6021 Innovation Blvd
Shakopee, MN 55379, USA
+1 800 999 9307 or +1 952 906 8888
F +1 952 949 7001
liquid.csc@emerson.com

NORTH AMERICA
Emerson Automation Solutions
8200 Market Blvd
Chanhassen, MN 55317
Toll Free +1 800 999 9307
F +1 952 949 7001
liquid.csc@emerson.com

EUROPE
Emerson Automation Solutions
Neuhofstrasse 19a P.O. Box 1046
CH-6340 Baar
Switzerland
T + 41 (0) 41 768 6111
F + 41 (0) 41 768 6300
liquid.csc@emerson.com

MIDDLE EAST AND AFRICA
Emerson Automation Solutions
Emerson FZE
Jebel Ali Free Zone
Dubai, United Arab Emirates, P.O. Box 17033
T +971 4 811 8100
F +971 4 886 5465
liquid.csc@emerson.com

ASIA-PACIFIC
Emerson Automation Solutions
1 Pandan Crescent
Singapore 128461
Singapore
T +65 777 8211
F +65 777 0947
liquid.csc@emerson.com

Linkedin.com/company/Emerson-Automation-Solutions
twitter.com/rosemount_news
Facebook.com/Rosemount
youtube.com/RosemountMeasurement

©2019 Emerson. All rights reserved.

The Emerson logo is a trademark and service mark of Emerson Electric Co. Rosemount is a mark of one of the Emerson family of companies. All other marks are the property of their respective owners.

ROSEMOUNT™

EMERSON™

Section 3.3.8

MBBR Media

TORONTO – MONTREAL – VANCOUVER
Tel: 905-660-9775 1-888-575-8642
info@h2flow.com www.h2flow.com

Biofilm Carrier

Product Name – BWTX™

Application

The BWT X™ Biofilm Carrier element is used in biological treatment processes for both water and wastewater treatment.

Design

The BWT X™ elements consist of nine (9) cells, with following dimensions:

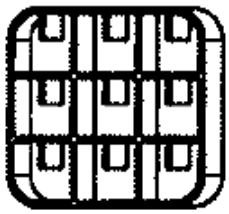

Width/Height :	14.5 mm (±0.5 mm)
Length :	8.2 mm (+0.2/-0.2mm)
Outer Perimeter :	55 mm
Inner Perimeter :	197 mm
Wall Thickness :	0.35 (±0.1 mm)

Note: Tolerances according to DIN 16941/3.

Material

Material :	Polyethylene, High-Density (HDPE).
Colour :	Natural
Specific Weight :	
Raw Material	0.96 (± 0.02) kg/L
Extruded Material	0.95 (± 0.02) kg/L

Note: Add-Max® 104 added to material to improve stabilization for extruding process.

The biofilm carrier elements are produced from a material and with a procedure that ensures that material will have a prolonged aging time; guaranteeing proper operation for its service life, provided that the carrier elements are:

- stored and packaged, as from the producer, and;
- applied in the biological reactors, according to standard practice.

The shape of the biofilm carrier elements may in some cases be irregular, which has no negative effect on the total guaranteed specific surface area.

Specifications

Carrier Element :	
Specific Surface Area (Protected)	650 m^2 per m^3
Weight	131 kg/m^3 (in bulk, at production)

Quality Assurance

The producer is instructed to visually inspect/test to control form, dimensions and density (kg/m^3 in bulk), to ensure conformity to specification.

Section 3.4

Chemical Dosing for MBBR Package

Section 3.4.1

Defoamer & Carbon Source Dosing

SMART Digital - DDA

up to 30 l/h

Installation and operating instructions



Further languages

http://net.grundfos.com/qr/i/95724708

be
think
innovate

GRUNDFOS

English (GB) Installation and operating instructions

Original installation and operating instructions

CONTENTS

		Page
1.	**Safety instructions**	**3**
1.1	Symbols used in this document	3
1.2	Qualification and training of personnel	3
1.3	Safety instructions for the operator/user	3
1.4	Safety of the system in the event of a failure in the dosing pump	3
1.5	Dosing chemicals	4
1.6	Diaphragm breakage	4
2.	**General information**	**5**
2.1	Applications	5
2.2	Improper operating methods	5
2.3	Symbols on the pump	6
2.4	Nameplate	6
2.5	Type key	7
2.6	Product overview	8
3.	**Technical data / Dimensions**	**9**
3.1	Technical data	9
3.2	Dimensions	11
4.	**Assembly and installation**	**12**
4.1	Pump assembly	12
4.1.1	Requirements	12
4.1.2	Align and install mounting plate	12
4.1.3	Engage pump in mounting plate	12
4.1.4	Adjusting control cube position	12
4.2	Hydraulic connection	13
4.3	Electrical connection	14
5.	**Startup**	**16**
5.1	Setting the menu language	16
5.2	Deaerating the pump	17
5.3	Calibrating the pump	17
6.	**Operation**	**19**
6.1	Control elements	19
6.2	Display and symbols	19
6.2.1	Navigation	19
6.2.2	Operating states	19
6.2.3	Sleep mode (energy-saving mode)	19
6.2.4	Overview of display symbols	20
6.3	Main menus	21
6.3.1	Operation	21
6.3.2	Info	21
6.3.3	Alarm	21
6.3.4	Setup	21
6.4	Operation modes	22
6.4.1	Manual	22
6.4.2	Pulse	22
6.4.3	Analog 0/4-20 mA	23
6.4.4	Batch (pulse-based)	24
6.4.5	Dosing timer cycle	25
6.4.6	Dosing timer week	25
6.5	Analog output	26
6.6	SlowMode	27
6.7	FlowControl	28
6.8	Pressure monitoring	29
6.8.1	Pressure setting ranges	29
6.8.2	Calibration of pressure sensor	29
6.9	Flow measurement	30
6.10	AutoFlowAdapt	30
6.11	Auto deaeration	30
6.12	Key lock	30
6.12.1	Temporary deactivation	30
6.12.2	Deactivation	30
6.13	Display Setup	31
6.13.1	Units	31
6.13.2	Additional display	31
6.14	Time+date	31
6.15	Bus communication	32
6.15.1	GENIbus communication	32
6.15.2	Possible industrial bus types	32
6.15.3	Activate communication	32
6.15.4	Setting the bus address	32
6.15.5	Characteristics of bus communication	33
6.15.6	Deactivate communication	33
6.15.7	Communication faults	33
6.16	Inputs/Outputs	34
6.16.1	Relay outputs	34
6.16.2	External stop	35
6.16.3	Empty and Low level signals	35
6.17	Basic settings	35
7.	**Service**	**36**
7.1	Regular maintenance	36
7.2	Cleaning	36
7.3	Service system	36
7.4	Perform service	37
7.4.1	Dosing head overview	37
7.4.2	Dismantling the diaphragm and valves	37
7.4.3	Reassembling the diaphragm and valves	38
7.5	Resetting the service system	38
7.6	Diaphragm breakage	38
7.6.1	Dismantling in case of diaphragm breakage	39
7.6.2	Dosing liquid in the pump housing	39
7.7	Repairs	39
8.	**Faults**	**40**
8.1	List of faults	41
8.1.1	Faults with error message	41
8.1.2	General faults	43
9.	**Disposal**	**43**



Warning

Prior to installation, read these installation and operating instructions. Installation and operation must comply with local regulations and accepted codes of good practice.

1. Safety instructions

These installation and operating instructions contain general instructions that must be observed during installation, operation and maintenance of the pump. It must therefore be read by the installation engineer and the relevant qualified operator prior to installation and start-up, and must be available at the installation location at all times.

1.1 Symbols used in this document



Warning
If these safety instructions are not observed, it may result in personal injury.

Caution — If these safety instructions are not observed, it may result in malfunction or damage to the equipment.

Note — Notes or instructions that make the job easier and ensure safe operation.

1.2 Qualification and training of personnel

The personnel responsible for the installation, operation and service must be appropriately qualified for these tasks. Areas of responsibility, levels of authority and the supervision of the personnel must be precisely defined by the operator. If necessary, the personnel must be trained appropriately.

Risks of not observing the safety instructions

Non-observance of the safety instructions may have dangerous consequences for the personnel, the environment and the pump and may result in the loss of any claims for damages.

It may lead to the following hazards:

- Personal injury from exposure to electrical, mechanical and chemical influences.
- Damage to the environment and personal injury from leakage of harmful substances.

1.3 Safety instructions for the operator/user

The safety instructions described in these instructions, existing national regulations on health protection, environmental protection and for accident prevention and any internal working, operating and safety regulations of the operator must be observed.

Information attached to the pump must be observed.

Leakages of dangerous substances must be disposed of in a way that is not harmful to the personnel or the environment.

Damage caused by electrical energy must be prevented, see the regulations of the local electricity supply company.

Caution — Before any work to the pump, the pump must be in the "Stop" operating state or be disconnected from the power supply. The system must be pressureless!

Note — The mains plug is the separator separating the pump from the mains.

Only original accessories and original spare parts should be used. Using other parts can result in exemption from liability for any resulting consequences.

1.4 Safety of the system in the event of a failure in the dosing pump

The dosing pump was designed according to the latest technologies and is carefully manufactured and tested.

If it fails regardless of this, the safety of the overall system must be ensured. Use the relevant monitoring and control functions for this.

Caution — Make sure that any chemicals that are released from the pump or any damaged lines do not cause damage to system parts and buildings.

The installation of leak monitoring solutions and drip trays is recommended.

1.5 Dosing chemicals

Warning

Before switching the supply voltage back on, the dosing lines must be connected in such a way that any chemicals in the dosing head cannot spray out and put people at risk.

The dosing medium is pressurised and can be harmful to health and the environment.

Warning

When working with chemicals, the accident prevention regulations applicable at the installation site should be applied (e.g. wearing protective clothing).

Observe the chemical manufacturer's safety data sheets and safety instructions when handling chemicals!

Caution

A deaeration hose, which is routed into a container, e.g. a drip tray, must be connected to the deaeration valve.

Caution

The dosing medium must be in liquid aggregate state!

Observe the freezing and boiling points of the dosing medium!

Caution

The resistance of the parts that come into contact with the dosing medium, such as the dosing head, valve ball, gaskets and lines, depends on the medium, media temperature and operating pressure.

Ensure that parts in contact with the dosing media are resistant to the dosing medium under operating conditions, see data booklet!

Should you have any questions regarding the material resistance and suitability of the pump for specific dosing media, please contact Grundfos.

1.6 Diaphragm breakage

If the diaphragm leaks or is broken, dosing liquid escapes from the drain opening (fig. 41, pos. 11) on the dosing head. Observe section *7.6 Diaphragm breakage*.

Warning

Danger of explosion, if dosing liquid has entered the pump housing!

Operation with damaged diaphragm can lead to dosing liquid entering the pump housing.

In case of diaphragm breakage, immediately separate the pump from the power supply!

Make sure the pump cannot be put back into operation by accident!

Dismantle the dosing head without connecting the pump to the power supply and make sure no dosing liquid has entered the pump housing. Proceed as described in section *7.6.1 Dismantling in case of diaphragm breakage*.

To avoid any danger resulting from diaphragm breakage, observe the following:

- Perform regular maintenance. See section *7.1 Regular maintenance*.
- Never operate the pump with blocked or soiled drain opening.
  - If the drain opening is blocked or soiled, proceed as described in section *7.6.1 Dismantling in case of diaphragm breakage*.
- Never attach a hose to the drain opening. If a hose is attached to the drain opening, it is impossible to recognise escaping dosing liquid.
- Take suitable precautions to prevent harm to health and damage to property from escaping dosing liquid.
- Never operate the pump with damaged or loose dosing head screws.

2. General information



The DDA dosing pump is a self-priming diaphragm pump. It consists of a housing with stepper motor and electronics, a dosing head with diaphragm and valves and the control cube.

Excellent dosing features of the pump:

- Optimal intake even with degassing media, as the pump always works at full suction stroke volume.
- Continuous dosing, as the medium is sucked up with a short suction stroke, regardless of the current dosing flow, and dosed with the longest possible dosing stroke.

2.1 Applications

The pump is suitable for liquid, non-abrasive, non-flammable and non-combustible media strictly in accordance with the instructions in these installation and operating instructions.

Areas of application

- Drinking water treatment
- Wastewater treatment
- Swimming pool water treatment
- Boiler water treatment
- CIP (Clean-In-Place)
- Cooling water treatment
- Process water treatment
- Wash plants
- Chemical industry
- Ultrafiltration processes and reverse osmosis
- Irrigation
- Paper and pulp industry
- Food and beverage industries

2.2 Improper operating methods

The operational safety of the pump is only guaranteed if it is used in accordance with section *2.1 Applications*.

Warning

Other applications or the operation of pumps in ambient and operating conditions, which are not approved, are considered improper and are not permitted. Grundfos cannot be held liable for any damage resulting from incorrect use.

Warning

The pump is NOT approved for operation in potentially explosive areas!

Warning

A sunscreen is required for outdoor installation!

Caution

Frequent disengagement from the mains voltage, e.g. via a relay, can result in damage to the pump electronics and in the breakdown of the pump. The dosing accuracy is also reduced as a result of internal start procedures.

Do not control the pump via the mains voltage for dosing purposes!

Only use the "External stop" function to start and stop the pump!

2.3 Symbols on the pump

Symbol	Description
	Indication of universally dangerous spot.
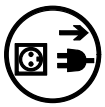	In case of emergency and prior to all maintenance work and repairs, take the mains plug out of the mains supply!
	The device complies with electrical safety class II.
	Connection for deaeration hose at dosing head. If the deaeration hose is not correctly connected, danger will arise due to possible leakage of dosing liquid!

2.4 Nameplate

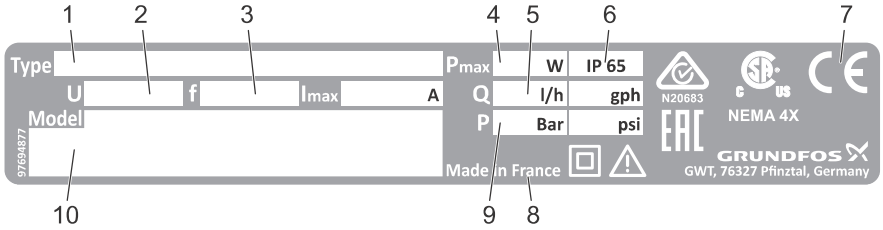

TM04 8144 1716

Fig. 1 Nameplate

Pos.	Description	Pos.	Description
1	Type designation	6	Enclosure class
2	Voltage	7	Mark of approval, CE mark, etc.
3	Frequency	8	Country of origin
4	Power consumption	9	Max. operating pressure
5	Max. dosing flow	10	Model

2.5 Type key

The type key is used to identify the precise pump and is not used for configuration purposes.

Code	Example	DDA	7.5-	16	AR-	PP/	V/	C-	F-	3	1	U2U2	F	G
	Pump type													
	Max. flow [l/h]													
	Max. pressure [bar]													
	Control variant													
AR	Standard													
FC	AR with FlowControl													
FCM	FC with integrated flow measurement													
	Dosing head material													
PP	Polypropylene													
PVC	PVC (polyvinyl chloride, only up to 10 bar)													
PV	PVDF (polyvinylidene fluoride)													
SS	Stainless steel DIN 1.4401													
	Gasket material													
E	EPDM													
V	FKM													
T	PTFE													
	Valve ball material													
C	Ceramic													
SS	Stainless steel DIN 1.4401													
	Control cube position													
F	Front-mounted (can be changed to the right or left)													
	Voltage													
3	1 x 100-240 V, 50/60 Hz													
	Valve type													
1	Standard													
2	Spring-loaded (HV version)													
	Suction/discharge side connection													
U2U2	Hose, 4/6 mm, 6/9 mm, 6/12 mm, 9/12 mm													
U7U7	Hose 0.17" x 1/4"; 1/4" x 3/8"; 3/8" x 1/2"													
AA	Threaded Rp 1/4", female (stainless steel)													
VV	Threaded 1/4" NPT, female (stainless steel)													
XX	No connection													
	Installation set*													
I001	Hose, 4/6 mm (up to 7.5 l/h, 13 bar)													
I002	Hose, 9/12 mm (up to 60 l/h, 9 bar)													
I003	Hose, 0.17" x 1/4" (up to 7.5 l/h, 13 bar)													
I004	Hose, 3/8" x 1/2" (up to 60 l/h, 10 bar)													
	Mains plug													
F	EU													
B	USA, Canada													
G	UK													
I	Australia, New Zealand, Taiwan													
E	Switzerland													
J	Japan													
L	Argentina													
	Design													
G	Grundfos													

* including: 2 pump connections, foot valve, injection unit, 6 m PE discharge hose, 2 m PVC suction hose, 2 m PVC deaeration hose (4/6 mm)

2.6 Product overview

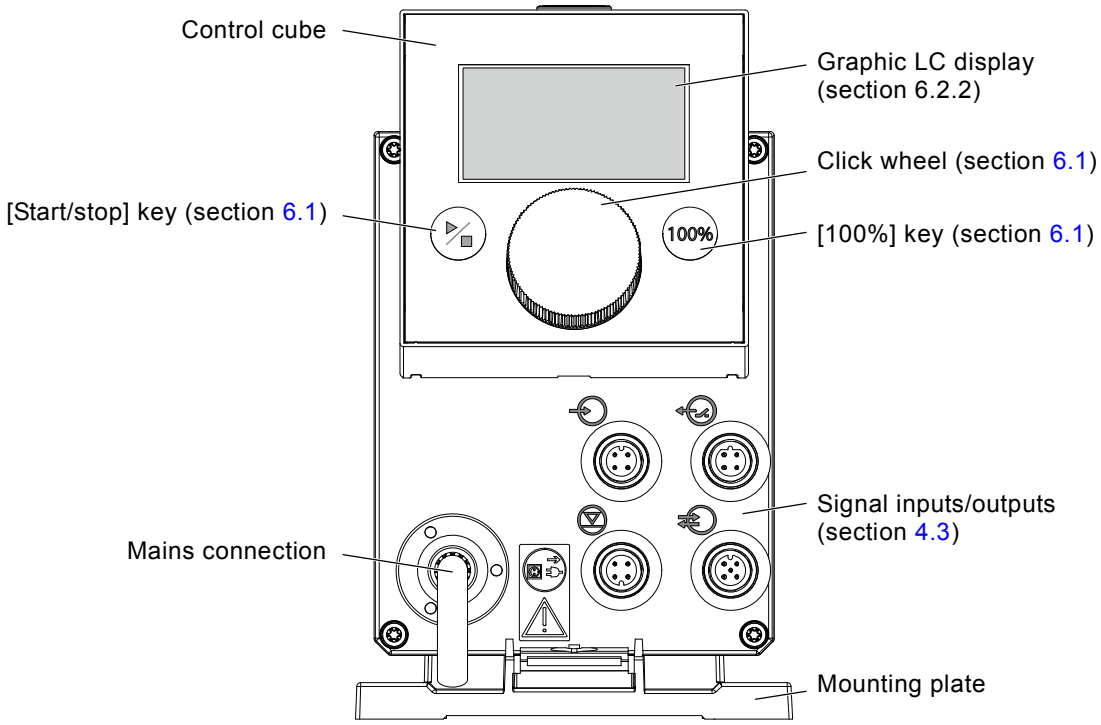

Fig. 2 Front view of the pump

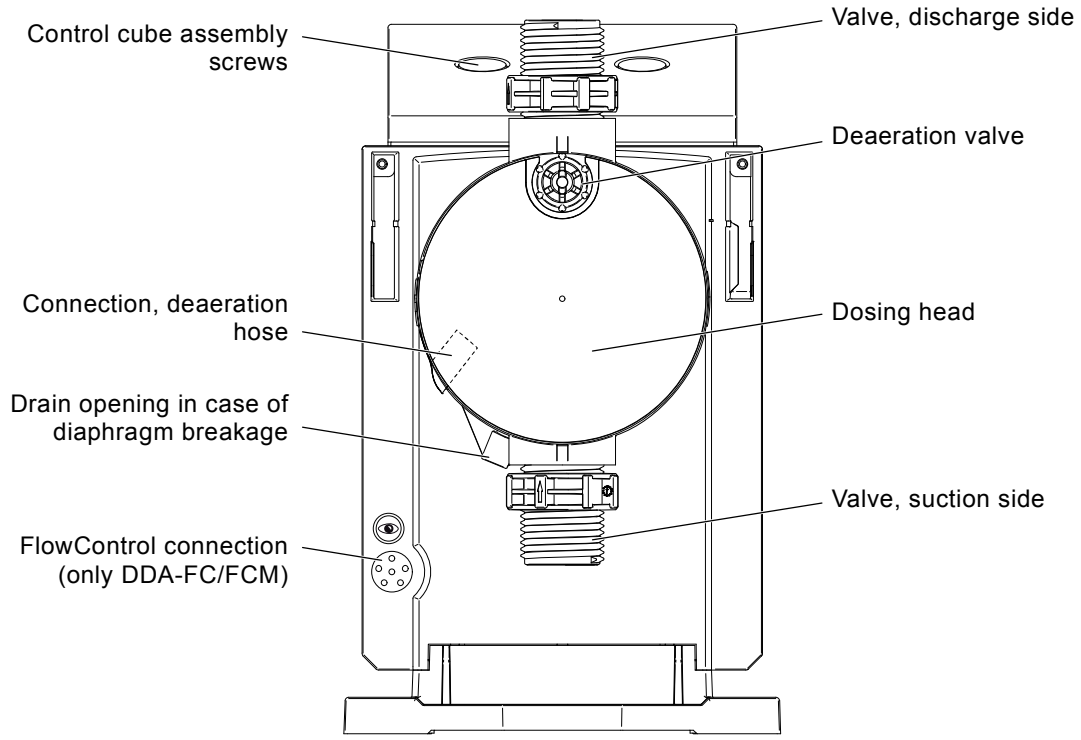

Fig. 3 Rear view of the pump

3. Technical data / Dimensions

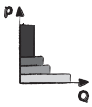

3.1 Technical data

Data			7.5-16	12-10	17-7	30-4
Mechanical data	Turn-down ratio (setting range)	[1:X]	3000	1000	1000	1000
	Max. dosing capacity	[l/h]	7.5	12.0	17.0	30.0
		[gph]	2.0	3.1	4.5	8.0
	Max. dosing capacity with SlowMode 50 %	[l/h]	3.75	6.00	8.50	15.00
		[gph]	1.00	1.55	2.25	4.00
	Max. dosing capacity with SlowMode 25 %	[l/h]	1.88	3.00	4.25	7.50
		[gph]	0.50	0.78	1.13	2.00
	Min. dosing capacity	[l/h]	0.0025	0.0120	0.0170	0.0300
		[gph]	0.0007	0.0031	0.0045	0.0080
	Max. operating pressure[6)]	[bar]	16	10	7	4
		[psi]	230	150	100	60
	Max. stroke frequency[1)]	[strokes/ min]	190	155	205	180
	Stroke volume	[ml]	0.74	1.45	1.55	3.10
	Accuracy of repeatability	[%]	± 1			
	Max. suction lift during operation[2)]	[m]	6			
	Max. suction lift when priming with wet valves[2)]	[m]	2	3	3	2
	Min. pressure difference between suction and discharge side	[bar]	1 (FC and FCM: 2)			
	Max. inlet pressure, suction side	[bar]	2			
	Max. viscosity in SlowMode 25 % with spring-loaded valves[3)]	[mPas] (= cP)	2500	2500	2000	1500
	Max. viscosity in SlowMode 50 % with spring-loaded valves[3)]	[mPas] (= cP)	1800	1300	1300	600
	Max. viscosity without SlowMode with spring-loaded valves[3)]	[mPas] (= cP)	600	500	500	200
	Max. viscosity without spring-loaded valves[3)]	[mPas] (= cP)	50	300	300	150
	Min. internal hose/pipe diameter suction/discharge side[2), 4)]	[mm]	4	6	6	9
	Min. internal hose/pipe diameter suction/discharge side (high viscosity)[4)]	[mm]	9			
	Min./Max. liquid temperature	[°C]	-10/45			
	Min./Max. ambient temperature	[°C]	0/45			
	Min./Max. storage temperature	[°C]	-20/70			
	Max. relative humidity (non-condensing)	[%]	96			
	Max. altitude above sea level	[m]	2000			

Data			7.5-16	12-10	17-7	30-4
Electrical data	Voltage	[V]	100-240 V, - 10 %/+ 10 %, 50/60 Hz			
	Length of mains cable	[m]	1.5			
	Max. inrush current for 2 ms (100 V)	[A]	8			
	Max. inrush current for 2 ms (230 V)	[A]	25			
	Max. power consumption P_1	[W]	24[5)]			
	Enclosure class		IP65, Nema 4X			
	Electrical safety class		II			
	Pollution degree		2			
Signal input	Max. load for level input		12 V, 5 mA			
	Max. load for pulse input		12 V, 5 mA			
	Max. load for External stop input		12 V, 5 mA			
	Min. pulse length	[ms]	5			
	Max. pulse frequency	[Hz]	100			
	Impedance at 0/4-20 mA analog input	[Ω]	15			
	Accuracy of analog input (full-scale value)	[%]	± 1.5			
	Min. resolution of analog input	[mA]	0.05			
	Max. resistance in level/pulse circuit	[Ω]	1000			
Signal output	Max. ohmic load on relay output	[A]	0.5			
	Max. voltage on relay/analog output	[V]	30 VDC/30 VAC			
	Impedance at 0/4-20 mA analog output	[Ω]	500			
	Accuracy of analog output (full-scale value)	[%]	± 1.5			
	Min. resolution of analog output	[mA]	0.02			
Weight/size	Weight (PVC, PP, PVDF)	[kg]	2.4	2.4		2.6
	Weight (stainless steel)	[kg]	3.2	3.2		4.0
	Diaphragm diameter	[mm]	44	50		74
Sound pressure	Max. sound pressure level	[dB(A)]	60			
Approvals			CE, CB, CSA-US, NSF61, EAC, ACS, C-Tick			

1) The maximum stroke frequency varies depending on calibration

2) Data is based on measurements with water

3) Maximum suction lift: 1 m, dosing capacity reduced (approx. 30 %)

4) Length of suction line: 1.5 m, length of discharge line: 10 m (at max. viscosity)

5) With E-Box

6) PVC (polyvinyl chloride), only up to 10 bar

3.2 Dimensions

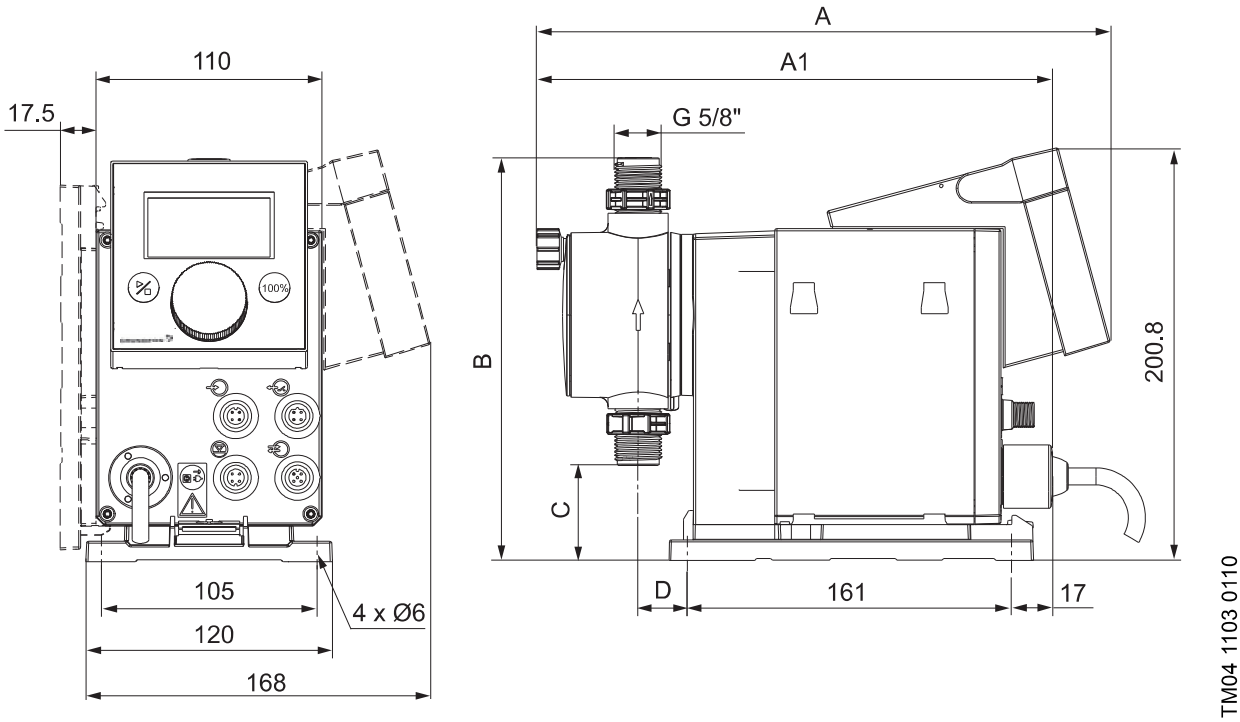

Fig. 4 Dimensional sketch

Pump type	A [mm]	A1 [mm]	B [mm]	C [mm]	D [mm]
DDA 7.5-16	280	251	196	46.5	24
DDA 12-10/17-7	280	251	200.5	39.5	24
DDA 30-4	295	267	204.5	35.5	38.5

4. Assembly and installation

For use in Australia:

Note

Installation of this product must comply with AS/NZS3500!

Certificate of suitability number: CS9431

C-tick number: N20683

4.1 Pump assembly

Warning

Install the pump in such a way that the plug can easily be reached by the operator during operation! This will enable the operator to separate the pump from the mains quickly in case of emergency!

The pump is delivered with a mounting plate. The mounting plate can be mounted vertically e.g. on a wall or horizontally e.g. on a tank. It takes just a few quick steps to firmly secure the pump to the mounting plate by means of a slot mechanism.

The pump can easily be released from the mounting plate for maintenance.

4.1.1 Requirements

- The mounting surface must be stable and must not vibrate.
- Dosing must flow upwards vertically.

4.1.2 Align and install mounting plate

- **Vertical installation**: Mounting plate slot mechanism must be above.
- **Horizontal installation**: Mounting plate slot mechanism must be opposite the dosing head.
- The mounting plate can be used as a drill template, please see fig. 4 for drill hole distances.



TM04 1162 0110

Fig. 5 Locate mounting plate

Warning

Make sure that you do not damage any cables and lines during installation!

1. Indicate drill holes.
2. Drill holes.
3. Secure mounting plate using four screws, diameter 5 mm, to the wall, on the bracket or the tank.

4.1.3 Engage pump in mounting plate

1. Attach the pump to the mounting plate support clamps and slide under slight pressure until it engages.

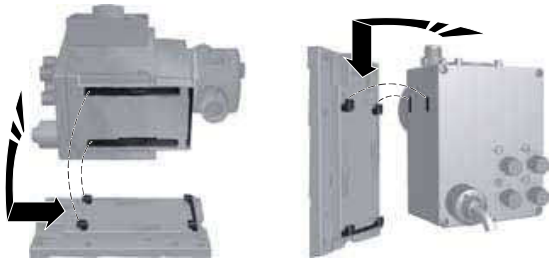

TM04 1159 0110

Fig. 6 Engaging the pump

4.1.4 Adjusting control cube position

The control cube is fitted to the front of the pump on delivery. It can be turned by 90 ° so that the user can select to operate the pump from the right or left side.

Caution

The enclosure class (IP65/Nema 4X) and shock protection are only guaranteed if the control cube is installed correctly!

Caution

Pump must be disconnected from the power supply!

1. Carefully remove both protective caps on the control cube using a thin screwdriver.
2. Loosen screws.
3. Carefully lift off control cube only so far from the pump housing that no tensile stress is produced on the flat band cable.
4. Turn control cube by 90 ° and re-attach.
   – Make sure the O-ring is secure.
5. Tighten screws slightly and attach protective caps.

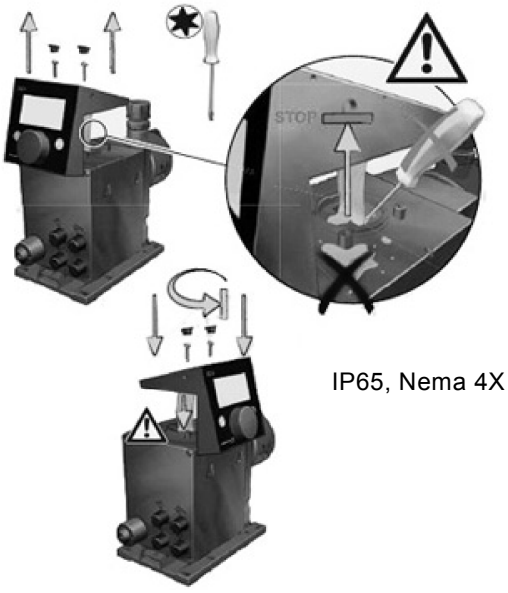

IP65, Nema 4X

TM04 1182 0110

Fig. 7 Adjusting control cube

4.2 Hydraulic connection

Warning

Risk of chemical burns!

Wear protective clothing (gloves and goggles) when working on the dosing head, connections or lines!

The dosing head may contain water from the factory check!

Caution When dosing media which should not come into contact with water, another medium must be dosed beforehand!

Caution Faultless function can only be guaranteed in conjunction with lines supplied by Grundfos!

Caution The lines used must comply with the pressure limits as per section *3.1 Technical data*!

Important information on installation

- Observe suction lift and line diameter, see section *3.1 Technical data*.
- Shorten hoses at right angles.
- Ensure that there are no loops or kinks in the hoses.
- Keep suction line as short as possible.
- Route suction line up towards the suction valve.
- Installing a filter in the suction line protects the entire installation against dirt and reduces the risk of leakage.
- Only control variant FC/FCM: For discharge quantities < 1 l/h we recommend the use of an additional spring-loaded valve (approx. 3 bar) on the discharge side for the safe generation of the necessary differential pressure.

Hose connection procedure

1. Push union nut and tensioning ring across hose.
2. Push cone part fully into hose, see fig. 8.
3. Attach cone part with hose to corresponding pump valve.
4. Tighten union nut manually.
   – Do not use tools!
5. Tighten up union nuts after 2-5 operating hours if using PTFE gaskets!
6. Attach deaeration hose to the corresponding connection (see fig. 3) and run into a container or a collecting tray.

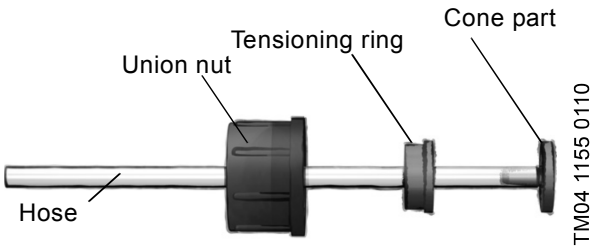

Fig. 8 Hydraulic connection

Note Pressure differential between suction and discharge side must be at least 1 bar/14.5 psi!

Caution Tighten the dosing head screws with a torque wrench once before commissioning and again after 2-5 operating hours at 4 Nm.

Installation example

The pump offers various installation options. In the picture below, the pump is installed in conjunction with a suction line, level switch and multifunction valve on a Grundfos tank.

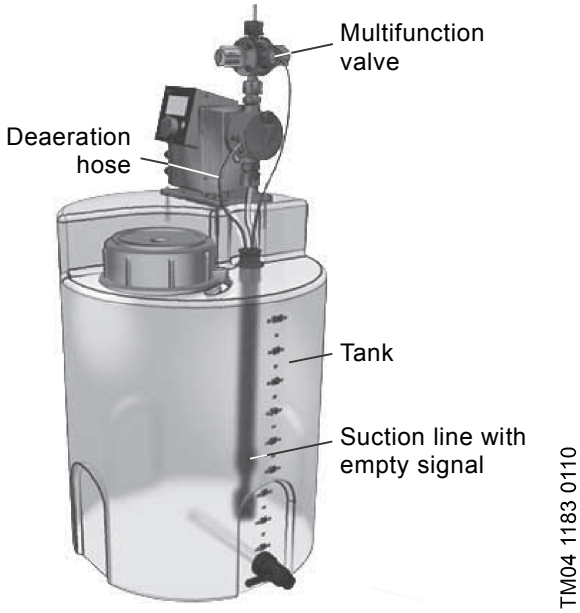

Fig. 9 Installation example

4.3 Electrical connection

Warning

The enclosure class (IP65/Nema 4X) is only guaranteed if plugs or protective caps are correctly installed!

Warning

The pump can start automatically when the mains voltage is switched on!

Do not manipulate mains plug or cable!

The mains plug is the separator separating the pump from the mains.

Note The rated voltage of the pump, see section *2.4 Nameplate*, must conform to local conditions.

Signal connections

Warning

Electric circuits of external devices connected to the pump inputs must be separated from dangerous voltage by means of double or reinforced insulation!

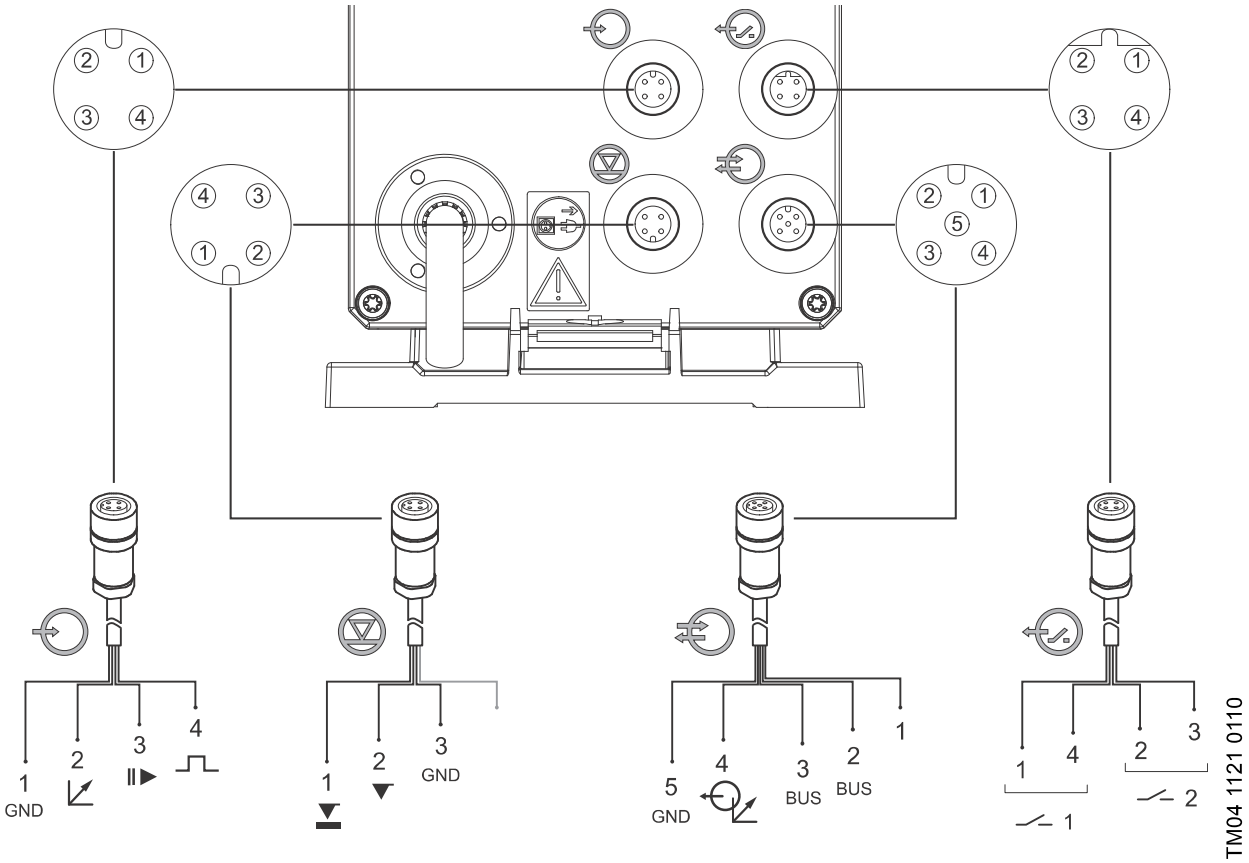

Fig. 10 Wiring diagram of the electrical connections

Analog, External stop and pulse input

Function	Pins				Plug type
	1/brown	2/white	3/blue	4/black	
Analog	GND/(-) mA	(+) mA			mA signal
External stop	GND		X		Pulse
Pulse	GND			X	Pulse

Level signals: Empty signal and Low-level signal

Function	Pins				Plug type
	1	2	3	4	
Low-level signal	X		GND		Pulse
Empty signal		X	GND		Pulse

GENIbus, Analog output

Caution

Danger of damage to the product due to short circuit! Pin 1 supplies 30 VDC.

Never short-circuit pin 1 with any of the other pins!

Function	Pins					Plug type
	1/brown	2/white	3/blue	4/black	5/yellow/ green	
GENIbus	+30 V	GENI bus TXD	GENI bus RXD		GND	Bus
Analog output				(+) mA	GND/(-) mA	mA signal

Relay outputs

Function	Pins				Plug type
	1/brown	2/white	3/blue	4/black	
Relay 1	X			X	Pulse
Relay 2		X	X		Pulse

FlowControl signal connection

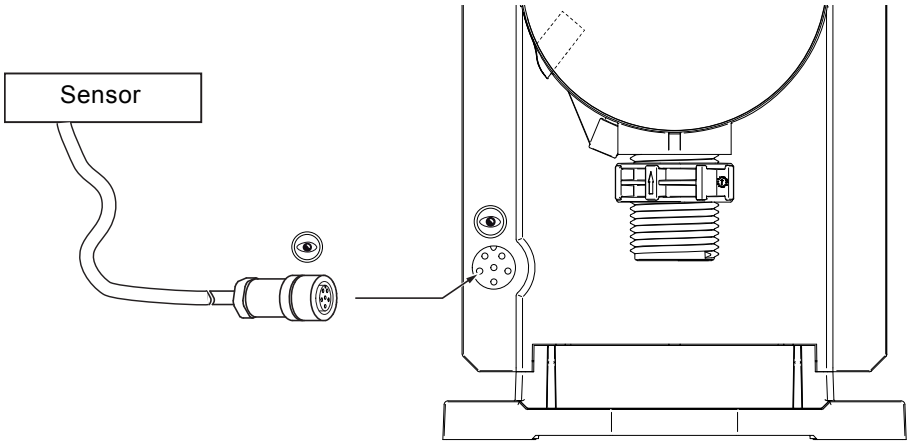

TM04 1158 1716

Fig. 11 FlowControl signal connection

5. Startup

5.1 Setting the menu language

For description of control elements, see section 6.

1. Turn click wheel to highlight the cog symbol.



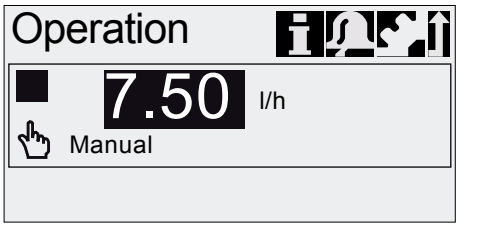

2. Press the click wheel to open the "Setup" menu.



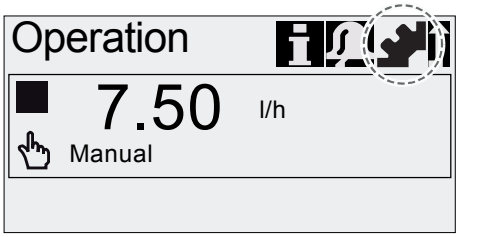

3. Turn the click wheel to highlight the "Language" menu.



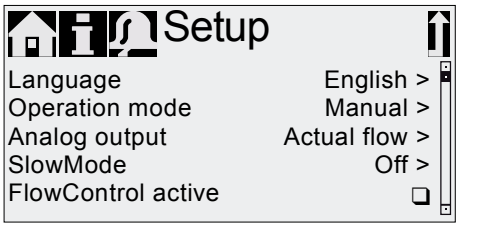

4. Press the click wheel to open the "Language" menu.



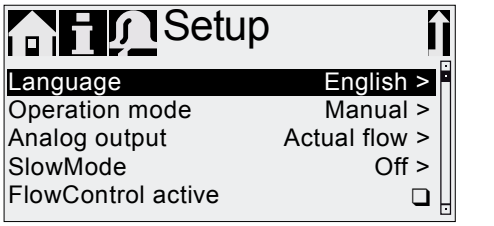

5. Turn the click wheel to highlight the desired language.





6. Press the click wheel to select the highlighted language.



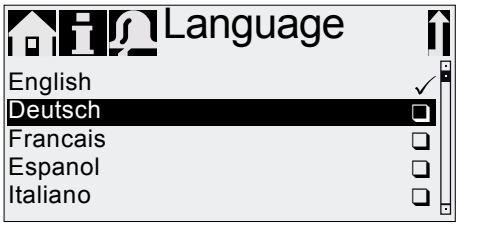

7. Press the click wheel again to confirm the "Confirm settings?" prompt and apply the setting.





TM04 1184 1110

Fig. 12 Set menu language

5.2 Deaerating the pump



Warning
The deaeration hose must be connected correctly and inserted into a suitable tank!

1. Open deaeration valve by approximately half a turn.
2. Press and hold down the [100%] key (deaeration key) until liquid flows continuously without any bubbles from the deaeration hose.
3. Close deaeration valve.

Note

Press the [100%] key and simultaneously turn the click wheel clockwise to increase the duration of the process to up to 300 seconds. After setting the seconds, do not press the key any longer.

5.3 Calibrating the pump

The pump is calibrated in the factory for media with a viscosity similar to water at maximum pump backpressure (see section *3.1 Technical data*).

If the pump is operated with a backpressure that deviates or if dosing a medium whose viscosity deviates, the pump must be calibrated.

For pumps with FCM control variant, it is not necessary to calibrate the pump if there is deviating or fluctuating backpressure as long as the "AutoFlowAdapt" function has been enabled (see section *6.10 AutoFlowAdapt*).

Requirements

- The hydraulics and electrics of the pump are connected (see section *4. Assembly and installation*).
- The pump is integrated into the dosing process under operating conditions.
- The dosing head and suction hose are filled with dosing medium.
- The pump has been deaerated.

Calibration process - example for DDA 7.5-16

1. Fill a measuring beaker with dosing medium. Recommended filling volumes V_1:
   – DDA 7.5-16: 0.3 l
   – DDA 12-10: 0.5 l
   – DDA 17-7: 1.0 l
   – DDA 30-4: 1.5 l

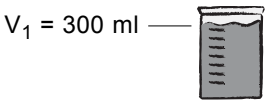

2. Read off and note down the fill volume V_1 (e.g. 300 ml).
3. Place the suction hose in the measuring beaker.



4. Start the calibration process in the "Setup > Calibration" menu.

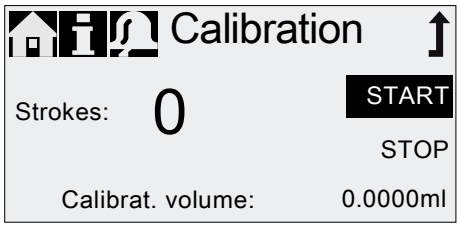

5. The pump executes 200 dosing strokes and displays the factory calibration value (e.g. 125 ml).

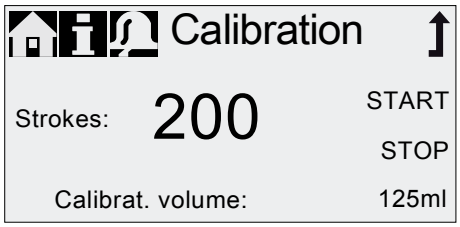

6. Remove the suction hose from the measuring beaker and check the remaining volume V_2 (e.g. 170 ml).

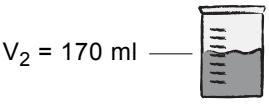

7. From V_1 and V_2, calculate the actual dosed volume $V_d = V_1 - V_2$ (e.g. 300 ml - 170 ml = 130 ml).

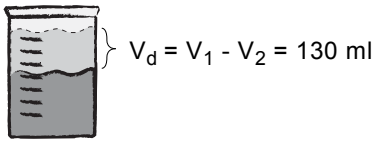

8. Set and apply V_d in the calibration menu.

• The pump is calibrated.

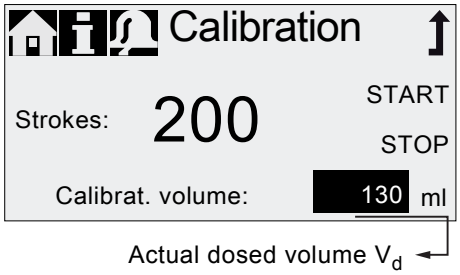

TM04 1154 1110

6. Operation

6.1 Control elements

The pump control panel includes a display and the following control elements.

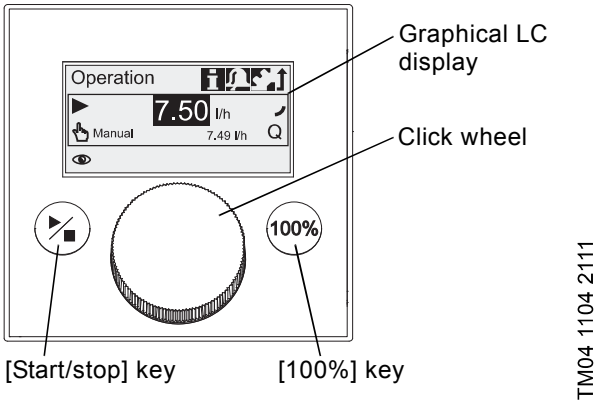

Fig. 13 Control panel

Keys

Key	Function
[Start/stop] key	Starting and stopping the pump.
[100%] key	The pump doses at maximum flow regardless of the operation mode.

Click wheel

The click wheel is used to navigate through the menus, select settings and confirm them.

Turning the click wheel clockwise moves the cursor clockwise in increments in the display. Turning the click wheel counter-clockwise moves the cursor counter-clockwise.

6.2 Display and symbols

6.2.1 Navigation

In the "Info", "Alarm" and "Setup" main menus, the options and submenus are displayed in the rows below. Use the "Back" symbol to return to the higher menu level. The scroll bar at the right edge of the display indicates that there are further menu items which are not shown.

The active symbol (current cursor position) flashes. Press the click wheel to confirm your selection and open the next menu level. The active main menu is displayed as text, the other main menus are displayed as symbols. The position of the cursor is highlighted in black in the sub-menus.

When you position the cursor on a value and press the click wheel, a value is selected. Turning the click wheel clockwise increases the value, turning the click wheel counter-clockwise reduces the value. When you now press the click wheel, the cursor will be released again.

6.2.2 Operating states

The operating state of the pump is indicated by a symbol and display colour.

Display	Fault	Operating state		
White	-	Stop ■	Standby ❙❙	
Green	-			Running ▶
Yellow	Warning	Stop ■	Standby ❙❙	Running ▶
Red	Alarm	Stop ■	Standby ❙❙	

6.2.3 Sleep mode (energy-saving mode)

If in the "Operation" main menu the pump is not operated for 30 seconds, the header disappears. After two minutes, the display brightness is reduced.

If in any other menu the pump is not operated for two minutes, the display switches back to the "Operation" main menu and the display brightness is reduced. This state will be cancelled when the pump is operated or a fault occurs.

6.2.4 Overview of display symbols

The following display symbols may appear in the menus.

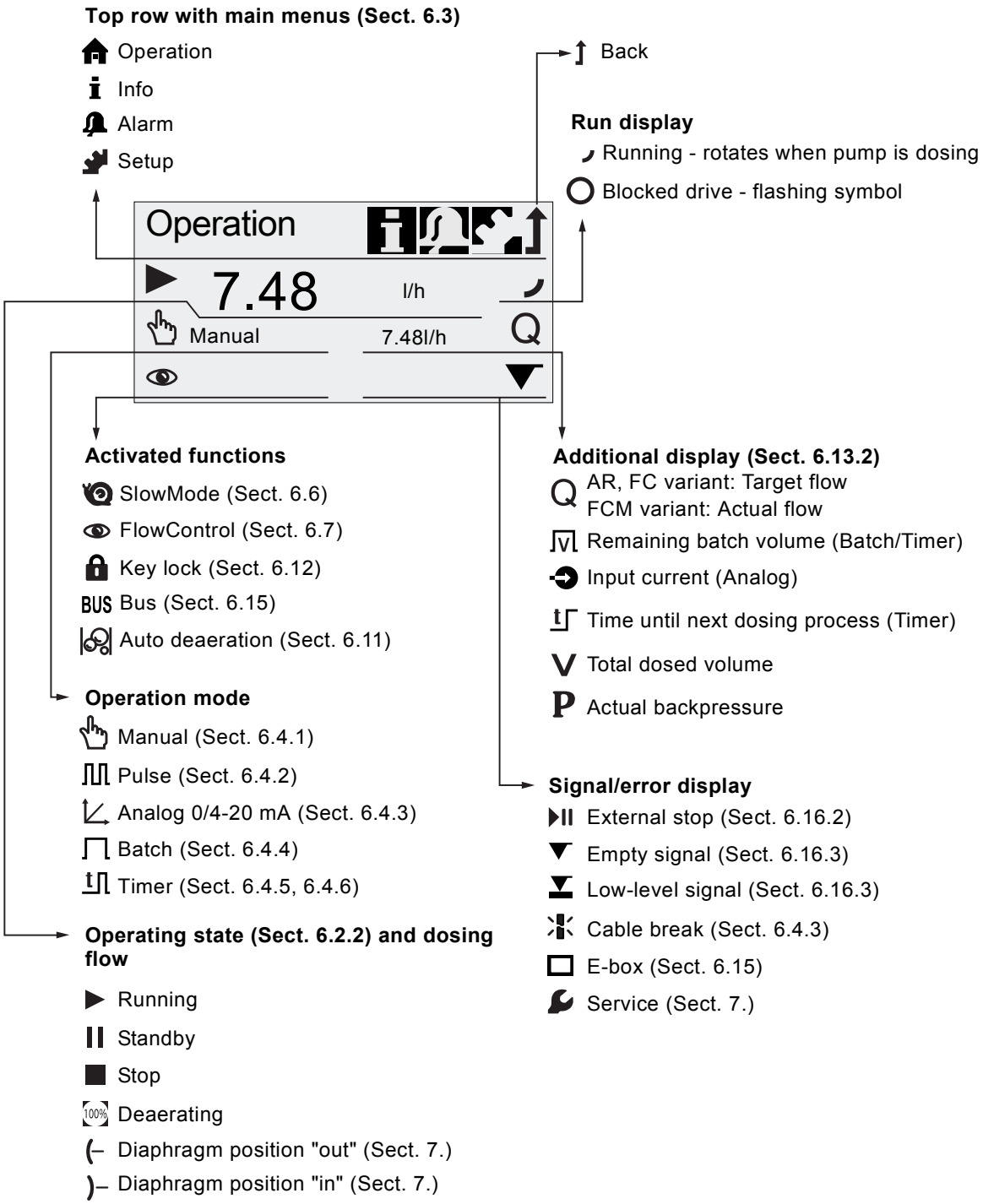

Fig. 14 Overview of display symbols

6.3 Main menus

The main menus are displayed as symbols at the top of the display. The currently active main menu is displayed as text.

6.3.1 Operation

Status information such as the dosing flow, selected operation mode and operating state is displayed in the "Operation" main menu.

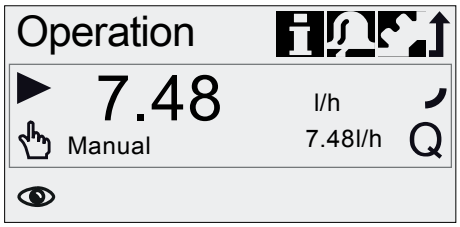

TM04 1157 2011

6.3.2 Info

You can find the date, time and information about the active dosing process, various counters, product data and the service system status in the "Info" main menu. The information can be accessed during operation.

The service system can also be reset from here.

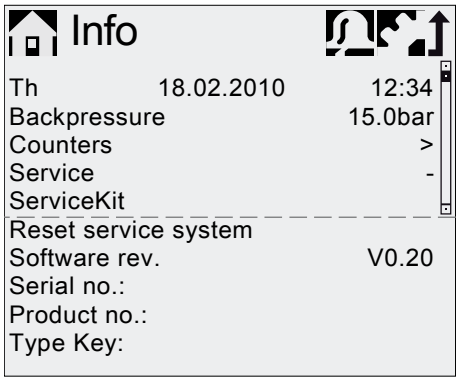

TM04 1106 1010

Counters

The "Info > Counters" menu contains the following counters:

Counters	Resettable
Volume Total dosed volume [l] or US gallons	Yes
Operating hours Accumulated operating hours (pump switched on) [h]	No
Motor runtime Accumulated motor runtime [h]	No
Strokes Accumulated number of dosing strokes	No
Power on/off Accumulated frequency of switching mains voltage on	No

6.3.3 Alarm

You can view errors in the "Alarm" main menu.

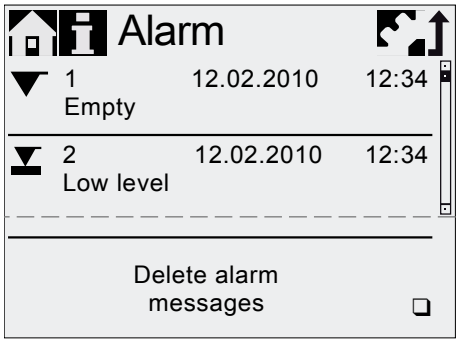

TM04 1109 1010

Up to 10 warnings and alarms, together with their date, time and cause, are listed in chronological order. If the list is full, the oldest entry will be overwritten, see section *8. Faults*.

6.3.4 Setup

The "Setup" main menu contains menus for pump configuration. These menus are described in the following sections.

Note Check all pump settings after any change in the "Setup" menu.

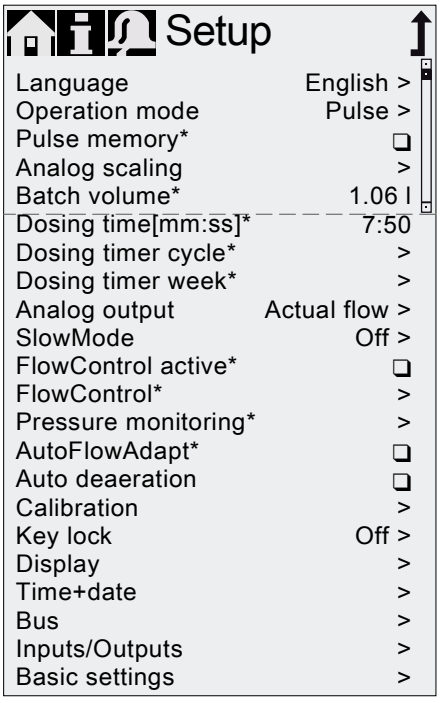

TM04 1110 1010

* These submenus are only displayed for specific default settings and control variants.
The contents of the "Setup" menu also vary depending on the operation mode.

6.4 Operation modes

Six different operation modes can be set in the "Setup > Operation mode" menu.

- Manual, see section 6.4.1
- Pulse, see section 6.4.2
- Analog 0-20 mA, see section 6.4.3
  Analog 4-20 mA, see section 6.4.3
- Batch (pulse-based), see section 6.4.4
- Dosing timer cycle, see section 6.4.5
- Dosing timer week, see section 6.4.6

6.4.1 Manual

In this operation mode, the pump constantly doses the dosing flow set with the click wheel. The dosing flow is set in l/h or ml/h in the "Operation" menu. The pump automatically switches between the units. Alternatively, the display can be reset to US units (gph). See section *6.13 Display Setup*.

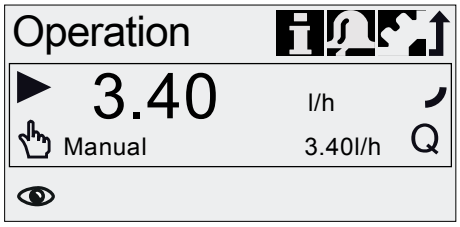

TM04 1125 1110

Fig. 15 Manual mode

The setting range depends on the pump type:

Type	Setting range*	
	[l/h]	[gph]
DDA 7.5-16	0.0025 - 7.5	0.0007 - 2.0
DDA 12-10	0.012 - 12	0.0031 - 3.1
DDA 17-7	0.017 - 17	0.0045 - 4.5
DDA 30-4	0.03 - 30	0.0080 - 8.0

* When the "SlowMode" function is active, the maximum dosing flow is reduced, see section *3.1 Technical data*.

6.4.2 Pulse

In this operation mode, the pump doses the set dosing volume for each incoming (potential-free) pulse, e.g. from a water meter. The pump automatically calculates the optimum stroke frequency for dosing the set volume per pulse.

The calculation is based on:

- the frequency of external pulses
- the set dosing volume/pulse.

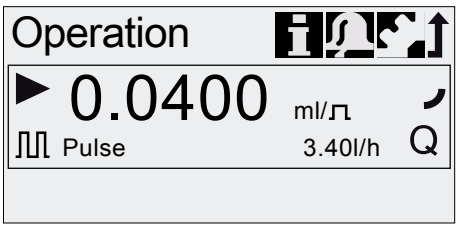

TM04 1126 1110

Fig. 16 Pulse mode

The dosing volume per pulse is set in ml/pulse in the "Operation" menu using the click wheel. The setting range for the dosing volume depends on the pump type:

Type	Setting range [ml/pulse]
DDA 7.5-16	0.0015 - 14.9
DDA 12-10	0.0029 - 29.0
DDA 17-7	0.0031 - 31.0
DDA 30-4	0.0062 - 62.0

The frequency of incoming pulses is multiplied by the set dosing volume. If the pump receives more pulses than it can process at the maximum dosing flow, it runs at the maximum stroke frequency in continuous operation. Excess pulses will be ignored if the memory function is not enabled.

Memory function

When the "Setup > Pulse memory" function is enabled, up to 65,000 unprocessed pulses can be saved for subsequent processing.

Warning
Subsequent processing of saved pulses can cause local increase in concentration!

The contents of the memory will be deleted by:

- Switching off the power supply
- Changing the operation mode
- Interruption (e.g. alarm, External stop).

6.4.3 Analog 0/4-20 mA

In this operation mode, the pump doses according to the external analog signal.
The dosing volume is proportional to the signal input value in mA.

Operation mode	Input value [mA]	Dosing flow [%]
4-20 mA	≤ 4.1	0
	≥ 19.8	100
0-20 mA	≤ 0.1	0
	≥ 19.8	100

If the input value in operation mode 4-20 mA falls below 2 mA, an alarm is displayed and the pump stops. A cable break or signal transmitter error has occurred. The "Cable break" symbol is displayed in the "Signal and error display" area of the display.

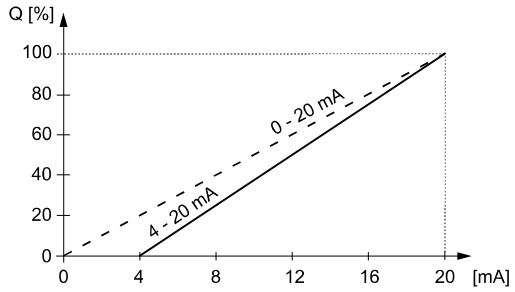

TM04 1120 2010

Fig. 17 Analog scaling

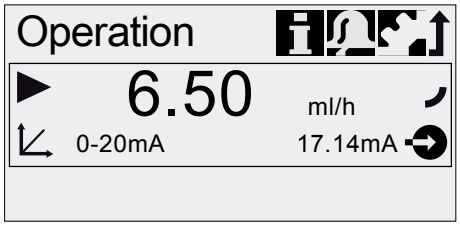

TM04 1127 1110

Fig. 18 Analog operation mode

Set analog scaling

Analog scaling refers to the assignment of the current input value to the dosing flow.

Changes of analog scaling affect also the analog output signal. See section *6.5 Analog output*.

Analog scaling passes through the two reference points (I_1/Q_1) and (I_2/Q_2), which are set in the "Setup > Analog scaling" menu. The dosing flow is controlled according to this setting.

Example 1 (DDA 7.5-16)

Analog scaling with positive gradient:

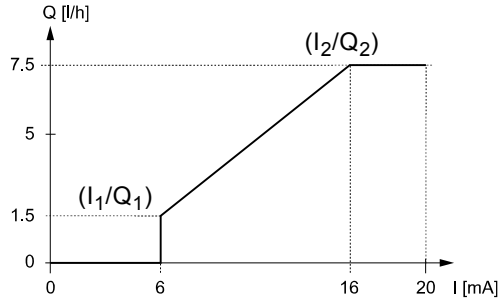

TM04 1160 2010

Fig. 19 Analog scaling with pos. gradient

In example 1, the reference points I_1 = 6 mA, Q_1 = 1.5 l/h and I_2 = 16 mA, Q_2 = 7.5 l/h have been set.

From 0 to 6 mA analog scaling is described by a line that passes through Q = 0 l/h, between 6 mA and 16 mA it rises proportionally from 1.5 l/h to 7.5 l/h and from 16 mA onwards it passes through Q = 7.5 l/h.

Example 2 (DDA 7.5-16)

Analog scaling with negative gradient (Operation mode 0-20 mA):

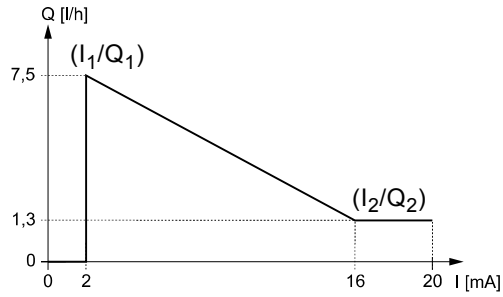

TM04 1101 2010

Fig. 20 Analog scaling with neg. gradient

In example 2, the reference points I_1 = 2 mA, Q_1 = 7.5 l/h and I_2 = 16 mA, Q_2 = 1.3 l/h have been set.

From 0 to 2 mA analog scaling is described by a line that passes through Q = 0 l/h, between 2 mA and 16 mA it drops proportionally from 7.5 l/h to 1.3 l/h and from 16 mA onwards it passes through Q_2 = 1.3 l/h.

Set analog scaling in the "Operation" menu

Analog scaling can also be modified after a security prompt directly in the "Operation" menu. This is how the dosing flow is directly modified for the current flow input value.

Caution Please observe that changes also have a direct effect on point I_2/Q_2 (see fig. 21)!

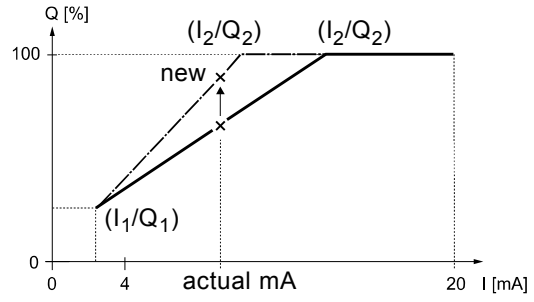

Fig. 21 Set analog scaling ("Operation" menu)

6.4.4 Batch (pulse-based)

In this operation mode, the pump doses the set batch volume in the set dosing time (t_1). A batch is dosed with each incoming pulse.

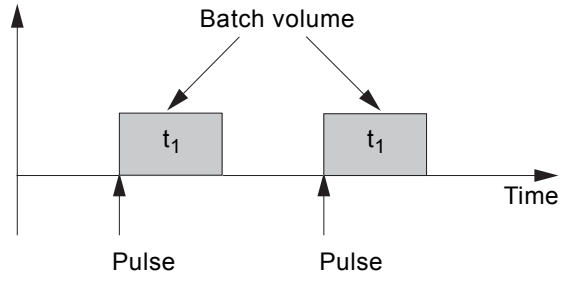

Fig. 22 Batch (pulse-based)

The setting range depends on the pump type:

Type	Setting range per batch		
	from [ml]	to [l]	Resolution* [ml]
DDA 7.5-16	0.74	999	0.0925
DDA 12-10	1.45	999	0.1813
DDA 17-7	1.55	999	0.1938
DDA 30-4	3.10	999	0.3875

* Thanks to the digital motor control, dosing quantities with a resolution of up to 1/8 of the dosing stroke volume can be dosed.

The batch volume (e.g. 75 ml) is set in the "Setup > Batch volume" menu. The minimum dosing time required for this (e.g. 36 seconds) is displayed and can be increased.

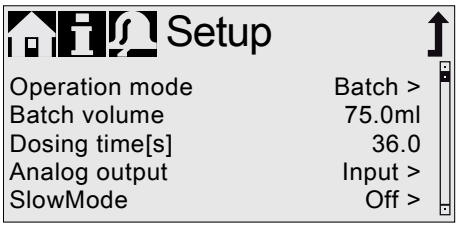

Fig. 23 Batch mode

Signals received during a batch process or an interruption (e.g. alarm, External stop) will be ignored. If the pump is restarted following an interruption, the next batch volume is dosed on the next incoming pulse.

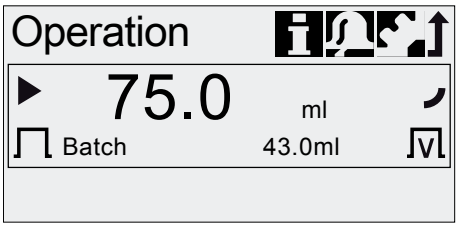

Fig. 24 Batch mode

In the "Operation" menu, the total batch volume (e.g. 75 ml) and the remaining batch volume still to be dosed (e.g. 43 ml) are shown in the display.

6.4.5 Dosing timer cycle

In this operation mode, the pump doses the set batch volume in regular cycles.
Dosing starts when the pump is started after a singular start delay. The setting range for the batch volume corresponds to the values in section *6.4.4 Batch (pulse-based)*.

Warning

When time or date is changed in "Time+date" menu, timer dosing and timer relay output functions (Relay 2) are stopped!

Timer dosing and timer relay output functions must be restarted manually!

Changing time or date can cause increase or decrease in concentration!

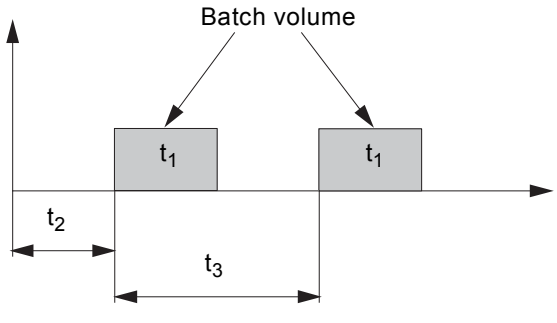

Fig. 25 Dosing timer cycle diagram

t_1	Dosing time
t_2	Start delay
t_3	Cycle time

In the event of an interruption (e.g. interruption of the mains voltage, External stop), the dosing will be stopped while the time continues running.
After suspending the interruption, the pump will continue to dose according to the actual timeline position.

The following settings are required in the "Setup > Dosing timer cycle" menu:

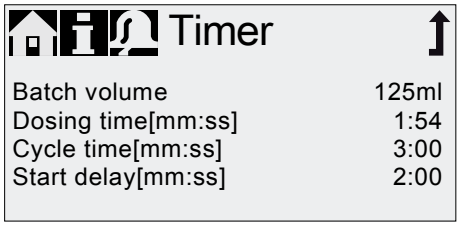

Fig. 26 Dosing timer cycle

The batch volume to be dosed (e.g. 125 ml) is set in the "Setup > Dosing timer cycle" menu. The dosing time required for this (e.g. 1:54) is displayed and can be changed.

The total batch volume (e.g. 125 ml) and the remaining batch volume still to be dosed are displayed in the "Operation" menu. During breaks in dosing, the time until the next dosing process (e.g. 1:21) is displayed.

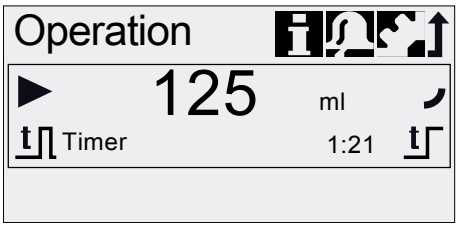

Fig. 27 Dosing timer cycle

6.4.6 Dosing timer week

In this operation mode, up to 16 dosing procedures are defined for a week.
These dosing procedures may take place regularly on one or several week days. The setting range for the batch volume corresponds to the values in section *6.4.4 Batch (pulse-based)*.

Warning

When time or date is changed in "Time+date" menu, timer dosing and timer relay output functions (Relay 2) are stopped!

Timer dosing and timer relay output functions must be restarted manually!

Changing time or date can cause increase or decrease in concentration!

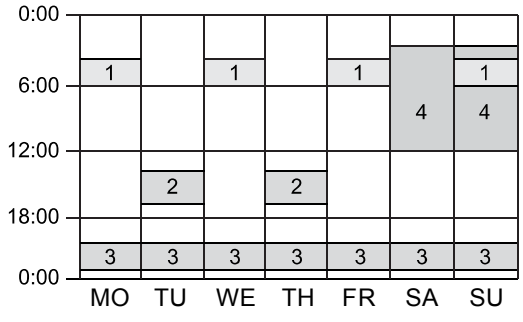

Fig. 28 Example for Dosing timer week function

Note If several procedures overlap, the process with the higher dosing flow has priority!

In the event of an interruption (e.g. disconnection of the mains voltage, External stop), the dosing is stopped while the time continues running.
After suspending the interruption, the pump continues to dose according to the actual timeline position.

The following settings are required in the "Setup > Dosing timer week" menu for each dosing procedure:

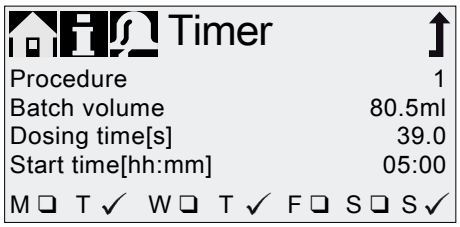

TM04 1138 1110

Fig. 29 Setting the timer

The batch volume (e.g. 80.5 ml) is set in the "Setup > Dosing timer week" menu. The dosing time required for this (e.g. 39.0) is displayed and can be changed.

In the "Operation" menu, the total batch volume (e.g. 80.5 ml) and the remaining batch volume to be dosed is displayed. During breaks in dosing, the time (e.g. 43:32) until the next dosing is displayed.

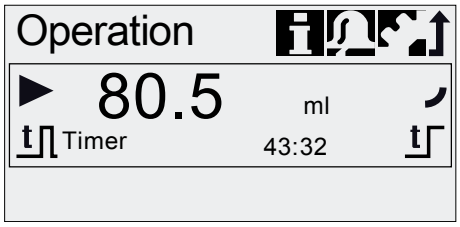

TM04 1136 1110

Fig. 30 Weekly timer dosing (break in dosing)

6.5 Analog output

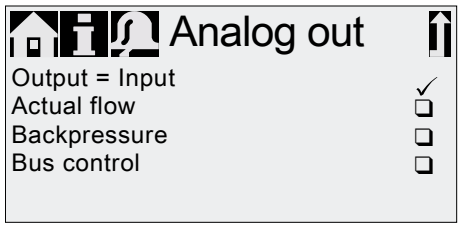

TM04 1153 1110

Fig. 31 Configure analog output

The analog output of the pump is parametrised in the "Setup > Analog output" menu. The following settings are possible:

Setting	Description of output signal	Variant FCM	FC	AR
Output = Input	Analog feedback signal (not for master-slave application). The analog input signal is mapped 1:1 to the analog output.	X	X	X
Actual flow**	Current actual flow • 0/4 mA = 0 % • 20 mA = 100 % see section *6.9 Flow measurement*	X	X*	X*
Backpressure	Backpressure, measured in the dosing head • 0/4 mA = 0 bar • 20 mA = Max. operating pressure see section *6.8 Pressure monitoring*	X	X	
Bus control	Enabled by command in Bus control, see section *6.15 Bus communication*	X	X	X

* Output signal is based on motor speed and pump status (target flow).

** Signal has same analog scaling as the current analog input signal. See *6.4.3 Analog 0/4-20 mA*.

Wiring diagram see section *4.3 Electrical connection*.

Note

In all operation modes, the analog output has a range of 4-20 mA. Exception: Operation mode 0-20 mA. Here, the analog output range is 0-20 mA.

6.6 SlowMode

When the "SlowMode" function is enabled, the pump slows down the suction stroke. The function is enabled in the "Setup > SlowMode" menu and is used to prevent cavitation in the following cases:

- for dosing media with a high viscosity
- for degassing dosing media
- for long suction lines
- for large suction lift.

In the "Setup > SlowMode" menu, the speed of the suction stroke can be reduced to 50 % or 25 %.

Caution Enabling the 'SlowMode' function reduces the maximum dosing flow of the pump to the set percentage value!

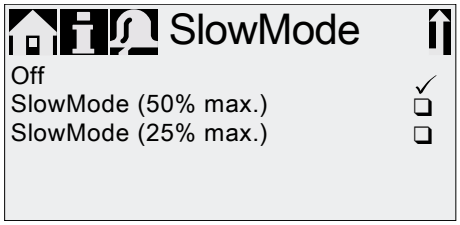

TM04 1153 1110

Fig. 32 SlowMode menu

6.7 FlowControl

Applies to DDA-FC/FCM control variant.

This function is used to monitor the dosing process. Although the pump is running, various influences e.g. air bubbles, can cause a reduced flow or even stop the dosing process. In order to guarantee optimum process safety, the enabled "FlowControl" function directly detects and indicates the following errors and deviations:

- Overpressure
- Damaged discharge line
- Air in the dosing chamber
- Cavitation
- Suction valve leakage > 70 %
- Discharge valve leakage > 70 %.

The occurrence of a fault is indicated by the "eye" symbol flashing. The faults are displayed in the "Alarm" menu (see section *8. Faults*).

FlowControl works with a maintenance-free sensor in the dosing head. During the dosing process, the sensor measures the current pressure and continuously sends the measured value to the microprocessor in the pump. An internal indicator diagram is created from the current measured values and the current diaphragm position (stroke length). Causes for deviations can be identified immediately by aligning the current indicator diagram with a calculated optimum indicator diagram. Air bubbles in the dosing head reduce e.g. the discharge phase and consequently the stroke volume (see fig. 33).

Requirements for a correct indicator diagram are:

- FlowControl function is active
- pressure difference between suction and discharge side is > 2 bar
- No interruption/pause in discharge stroke
- Pressure sensor and cable are functioning properly
- No leakage > 50 % in suction or discharge valve

If one of these requirements is not met, the indicator diagram cannot be evaluated.

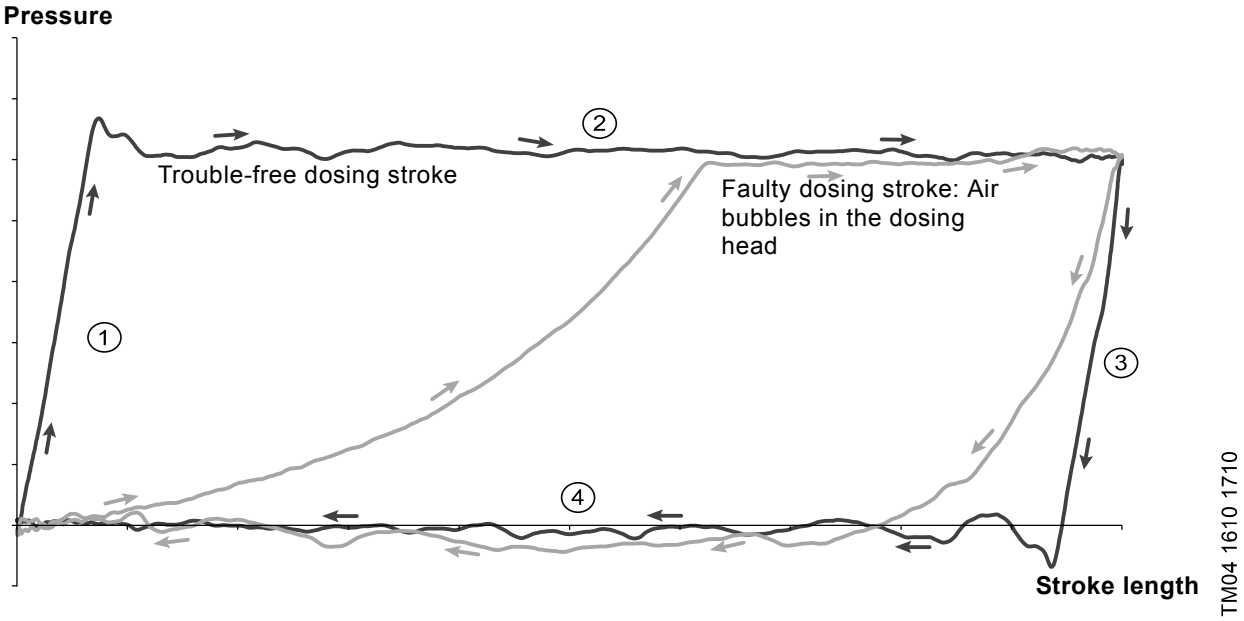

Fig. 33 Indicator diagram

1	Compression phase
2	Discharge phase
3	Expansion phase
4	Suction phase

Setting FlowControl

The "FlowControl" function is set using the two parameters "Sensitivity" and "Delay" in the "Setup > FlowControl" menu.

Sensitivity

In "Sensitivity" the deviation in stroke volume, which will result in an error message, is set in percent.

Sensitivity	Deviation
low	approx. 70 %
medium	approx. 50 %
high	approx. 30 %

Delay

The "Delay" parameter is used to define the time period until an error message is generated: "short", "medium" or "long". The delay depends on the set dosing flow and therefore cannot be measured in strokes or time.

Air bubbles

The "FlowControl" function identifies air bubbles > 60 % of the stroke volume. After switching to "Air bubble" warning status, the pump adapts the stroke frequency to approximately 30-40 % of max. stroke frequency, and starts a special motor drive strategy. The adaptation of the stroke frequency allows the air bubbles to rise from suction to discharge valve. Due to the special motor drive strategy the air bubbles are displaced from the dosing head into the discharge line.

If the air bubbles have not been eliminated after a maximum of 60 strokes, the pump returns to the normal motor drive strategy.

6.8 Pressure monitoring

Applies to DDA-FC/FCM control variant.

A pressure sensor monitors the pressure in the dosing head. If the pressure during the discharge phase falls below 2 bar, a warning is generated (pump continues running). If in the "Setup > Pressure monitoring" menu the function "Min. pressure alarm" is activated, an alarm is generated and the pump is stopped.

If the pressure exceeds the "Max. pressure" set in the "Setup > Pressure monitoring" menu, the pump is shut down, enters the standby state and indicates an alarm.

Caution

The pump restarts automatically once the backpressure falls below the set "Max. pressure"!

6.8.1 Pressure setting ranges

Type	Fixed min. pressure [bar]	Adjustable max. pressure [bar]
DDA 7.5-16	< 2	3-17
DDA 12-10	< 2	3-11
DDA 17-7	< 2	3-8
DDA 30-4	< 2	3-5

Warning

Install a pressure-relief valve in the pressure line to provide protection against impermissibly high pressure!

Caution

The pressure measured in the dosing head is slightly higher than the actual system pressure.

Therefore the "Max. pressure " should be set at least 0.5 bar higher than the system pressure.

6.8.2 Calibration of pressure sensor

The pressure sensor is calibrated in the factory. As a rule, it does not need to be re-calibrated. If specific circumstances (e.g. pressure sensor exchange, extreme air pressure values at the location of the pump) necessitate a calibration, the sensor can be calibrated as follows:

1. Set pump to "Stop" operating state.
2. Make system pressureless and flush.
3. Dismantle suction line and suction valve.

Warning

Calibrating when the suction valve is installed produces incorrect calibration and can cause personal injuries and damage to property!

Only carry out a calibration if this is technically required!

4. Proceed as described below to calibrate:

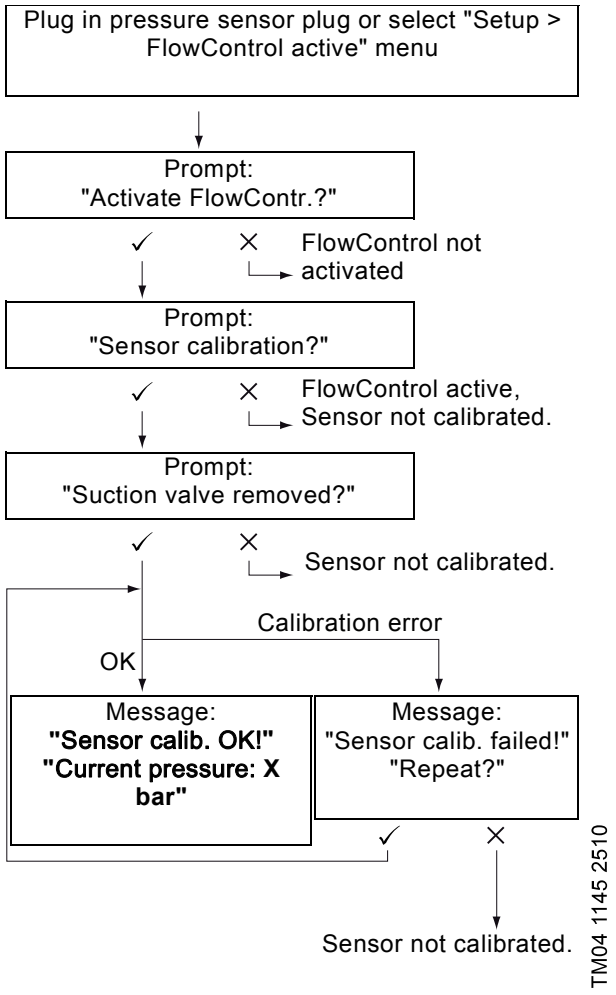

If a calibration is not successfully possible, check plug connections, cable and sensor and replace defective parts where necessary.

6.9 Flow measurement

Applies to DDA-FCM control variant.

The pump accurately measures the actual flow and displays it. Via the 0/4-20 mA analog output, the actual flow signal can easily be integrated into an external process control without additional measuring equipment (see section *6.5 Analog output*).

The flow measurement is based on the indicator diagram as described in section *6.7 FlowControl*. The accumulated length of the discharge phase multiplied by the stroke frequency produces the displayed actual flow. Faults e.g. air bubbles or backpressure that is too low result in a smaller or larger actual flow. When the "AutoFlowAdapt" function is activated (see section *6.10 AutoFlowAdapt*), the pump compensates for these influences by correction of the stroke frequency.

Note

Strokes which cannot be analysed (partial strokes, pressure differential which is too low) are provisionally calculated based on the setpoint value and displayed.

6.10 AutoFlowAdapt

Applies to DDA-FCM control variant.

The "AutoFlowAdapt" function is activated in the "Setup" menu. It detects changes in various parameters and responds accordingly in order to keep the set target flow constant.

Note

Dosing accuracy is increased when "AutoFlowAdapt" is activated.

This function processes information from the pressure sensor in the dosing head. Errors detected by the sensor are processed by the software. The pump responds immediately regardless of the operation mode by adjusting the stroke frequency or where necessary compensating for the deviations with a corresponding indicator diagram.

If the target flow cannot be achieved by the adjustments, a warning is issued.

"AutoFlowAdapt" operates on the basis of the following functions:

- FlowControl: malfunctions are identified (see section *6.7 FlowControl*).
- Pressure monitoring: pressure fluctuations are identified (see section *6.8 Pressure monitoring*).
- Flow measurement: deviations from the target flow are identified (see section *6.9 Flow measurement*).

Example of "AutoFlowAdapt"

Pressure fluctuations

The dosing volume decreases as backpressure increases and conversely the dosing volume increases as the backpressure decreases.

The "AutoFlowAdapt" function identifies pressure fluctuations and responds by adjusting the stroke frequency. The actual flow is thus maintained at a constant level.

6.11 Auto deaeration

Dosing degassing media can result in air pockets in the dosing head during breaks in dosing. This can result in no medium being dosed when restarting the pump. The "Setup > Auto deaeration" function performs pump deaeration automatically at regular intervals. Software-controlled diaphragm movements encourage any bubbles to rise and gather at the discharge valve so that they can be removed on the next dosing stroke.

The function works:

- when the pump is not in the "Stop" operating state
- during breaks in dosing (e.g. External stop, no incoming pulses, etc.).

Note

The diaphragm movements can displace small volumes into the discharge line. When dosing strongly degassing media, this is however virtually impossible.

6.12 Key lock

The key lock is set in the "Setup > Key lock" menu by entering a four-digit code. It protects the pump by preventing changes to settings. Two levels of key lock can be selected:

Level	Description
Settings	All settings can only be changed by entering the lock code. The [Start/stop] key and the [100%] key are not locked.
Settings + keys	The [Start/stop] key and the [100%] key and all settings are locked.

It is still possible to navigate in the "Alarm" and "Info" main menu and reset alarms.

6.12.1 Temporary deactivation

If the "Key lock" function is activated but settings need to be modified, the keys can be unlocked temporarily by entering the deactivation code. If the code is not entered within 10 seconds, the display automatically switches to the "Operation" main menu. The key lock remains active.

6.12.2 Deactivation

The key lock can be deactivated in the "Setup > Key lock" menu via the "Off" menu point. The key lock is deactivated after the general code "2583" or a pre-defined custom code has been entered.

6.13 Display Setup

Use the following settings in the "Setup > Display" menu to adjust the display properties:

- Units (metric/US)
- Display contrast
- Additional display.

6.13.1 Units

Metric units (litres/millilitres/bar) or US units (US gallons/PSI) can be selected. According to the operation mode and menu, the following units of measurement are displayed:

Operation mode / function	Metric units	US units
Manual control	ml/h or l/h	gph
Pulse control	ml/⊓	ml/⊓
0/4-20 mA Analog control	ml/h or l/h	gph
Batch (pulse- or timer-controlled)	ml or l	gal
Calibration	ml	ml
Volume counter	l	gal
Pressure monitoring	bar	psi

6.13.2 Additional display

The additional display provides additional information about the current pump status. The value is shown in the display with the corresponding symbol.

In "Manual" mode the "Actual flow" information can be displayed with Q = 1.28 l/h (see fig. 34).

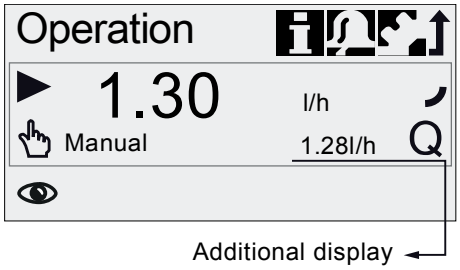

TM04 1151 2011

Fig. 34 Display with additional display

The additional display can be set as follows:

Setting	Description
Default display	Depending on the operation mode:
	Q Actual flow (Manual/Pulse)[1), 2)]
	Q Target flow (Pulse)
	Input current (analog)
	Remaining batch volume (Batch, Timer)
	t Period until next dosing (Timer)
Dosed volume	V Dosed vol. since last reset (see *Counters* on page 21)
Actual flow	Q Current actual flow[1)]
Backpressure	P Current backpressure in the dosing head[3)]

1) only DDA-FCM control variant

2) only if indicator diagram can be evaluated (see *6.7 FlowControl*)

3) only DDA-FCM/FC control variant

6.14 Time+date

The time and date can be set in the "Setup > Time+date" menu.

Warning

When time or date is changed in "Time+date" menu, timer dosing and timer relay output functions (Relay 2) are stopped!

Timer dosing and timer relay output functions must be restarted manually!

Changing time or date can cause increase or decrease in concentration!

Caution

The conversion between summer and winter time does not take place automatically!

6.15 Bus communication

BUS

The bus communication enables remote monitoring and setting of the pump via a fieldbus system.

Further manuals, functional profiles and support files (e.g. GSD-files) are available on the CD delivered with the interface hardware and on www.grundfos.com.

6.15.1 GENIbus communication

The pump is supplied with an integrated module for GENIbus communication. The pump identifies the bus control after connecting to the corresponding signal input. The "Activate communication?" prompt is displayed. After confirmation, the corresponding symbol appears in the "Activated functions" area in the "Operation" menu.

In the "Setup > Bus" menu the GENIbus address can be set from 32 to 231 and bus control can be deactivated.



TM04 1139 2410

Fig. 35 Bus menu

Caution The maximum cable length for GENIbus connection is 3 m and must not be exceeded!

6.15.2 Possible industrial bus types

The pump can be integrated into several networks using the additional E-box (Extension-Box).

Bus type	Interface hardware	Retrofitting possible for pump software
Profibus® DP	E-Box 150	V2.0 and higher
Modbus RTU	E-Box 200	V2.5 and higher

The pump can also be connected to a Grundfos CIU unit (CIU = Communication Interface Unit) equipped with one of the following CIM modules (CIM = Communication Interface Module):

- CIM150 Profibus
- CIM200 Modbus
- CIM270 GRM
- CIM500 Ethernet

For internal communication between the E-Box/CIU and the dosing pump, GENIbus is used.

Caution The maximum cable length for GENIbus connection is 3 m and must not be exceeded!

Caution Prior to installation and start-up, read the documentation delivered with the E-Box or CIU unit!

6.15.3 Activate communication

1. Set the pump to operating state "Stop" with the [Start/stop] key.
2. Switch off the power supply of the pump.
3. Install and connect the E-Box/CIU as described in the respective separate installation and operating instructions.
4. Switch on the power supply of the pump.

The "Activate communication?" prompt is displayed.

After confirmation, the "Bus" symbol appears in the "Activated functions" area of the "Operation" menu, no matter if the prompt was accepted or refused.

If the prompt has been accepted, the bus control function is activated. If the prompt has been refused, bus control function can be activated in "Setup > Bus" menu.

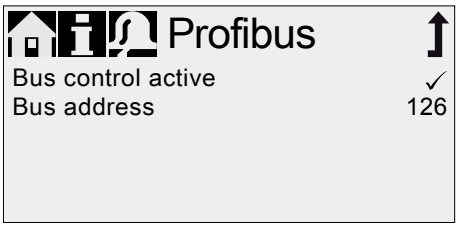

TM04 1139 2410

Fig. 36 Example of submenu for Profibus®

6.15.4 Setting the bus address

1. Enter "Setup > Bus" menu and set desired bus address:

Bus type	Address range
Profibus® DP	~~0 – 126~~0-126
Modbus RTU	~~1 – 247~~1-247

2. The pump needs to be restarted to initialise the new bus address. Switch off the power supply of the pump and wait for approximately 20 seconds.
3. Switch on the power supply of the pump.

The pump is initialised with the new bus address.

6.15.5 Characteristics of bus communication

To start and stop the pump via bus, it needs to be in operating state "Running". When the pump is remotely stopped from bus, the "External stop" symbol is displayed and the pump switches to operating state "Standby".

While bus control function is activated, the "Setup" menu only shows the "Bus" and "Key lock" submenus. The other main menus, the "External stop" function and the keys are still available.

All operation modes (see section *6.4 Operation modes*) can still be used when bus control is activated. This allows to use the bus control only for monitoring and setting the pump. In this case the respective "BusWatchDog" (see funtional profile on E-Box/CIU product CD) should be deactivated in bus control, because otherwise faults in communication can stop the pump.

Note

To change any settings manually, the bus control function must be deactivated temporarily.

The analog output can not be used while the pump is bus-controlled as both functions use the same electrical connection. See section *4.3 Electrical connection*.

6.15.6 Deactivate communication



Warning

After deactivating the bus control function, the pump can start automatically!

Before deactivating the bus control function, set the pump to operating state "Stop"!

Bus control function can be deactivated in the "Setup > Bus" menu. After deactivation all submenus in "Setup" menu are available.

The "Bus" symbol in the display disappears at next restart of the pump, after the E-Box/CIU plug was disconnected.

Caution

After disconnecting any plug, always refit protective cap!

6.15.7 Communication faults

Faults are only detected, if the respective "BusWatchDog" (see functional profile on E-Box/CIU product CD) is activated.



Warning

After a communication fault is repaired, the pump can start automatically, depending on current bus control and pump settings!

Before repairing any fault, set the pump to operating state "Stop"!

In case of bus communication faults (e.g. communication cable break), the pump stops dosing and switches to operating state "Standby" approximately 10 seconds after the fault was detected. An alarm is triggered, detailing the cause of the fault. See section *8. Faults*.

6.16 Inputs/Outputs

In the "Setup > Inputs/Outputs" menu, you can configure the two outputs "Relay 1+Relay 2" and the signal inputs "External stop", "Empty signal" and "Low-level signal".

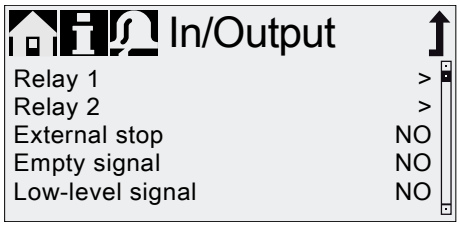

TM04 1152 1110

Fig. 37 Inputs/Outputs menu

Warning

When time or date is changed in "Time+date" menu, timer dosing and timer relay output functions (Relay 2) are stopped!

Timer dosing and timer relay output functions must be restarted manually!

Changing time or date can cause increase or decrease in concentration!

6.16.1 Relay outputs

The pump can switch two external signals using installed relays. The relays are switched by potential-free pulses. The connection diagram of the relays is shown in section *4.3 Electrical connection*. Both relays can be allocated with the following signals:

Relay 1 signal	Relay 2 signal	Description
Alarm*	Alarm	Display red, pump stopped (e.g. empty signal, etc.)
Warning*	Warning	Display yellow, pump is running (e.g. low-level signal, etc.)
Stroke signal	Stroke signal	Each full stroke
Pump dosing	Pump dosing*	Pump running and dosing
Pulse input**	Pulse input**	Each incoming pulse from pulse input
Bus control	Bus control	Activated by a command in the bus communication
	Timer Cycle	See following sections
	Timer Week	See following sections
Contact type		
NO*	NO*	Normally open contact
NC	NC	Normally closed contact

* Factory setting

** The correct transmission of incoming pulses can only be guaranteed up to a pulse frequency of 5 Hz.

Timer Cycle (Relay 2)

For the "Relay 2 > Timer Cycle" function, set the following parameters:

- On (t_1)
- Start delay (t_2)
- Cycle time (t_3)

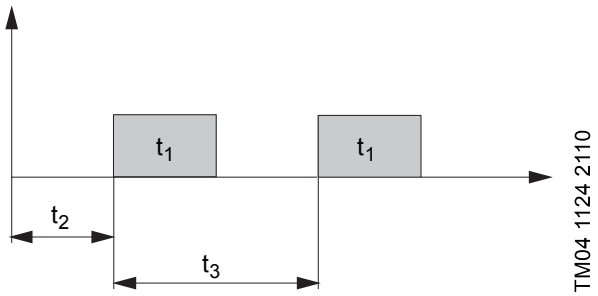

Fig. 38 Diagram

Timer Week (Relay 2)

This function saves up to 16 relay on-times for a week. The following settings can be made for each relay switching operation in the "Relay 2 > Timer Week" menu:

- Procedure (No.)
- On time (duration)
- Start time
- Weekdays.

6.16.2 External stop

The pump can be stopped via an external pulse, e.g. from a control room. When activating the external stop pulse, the pump switches from the operating state "Running" into the operating state "Standby". The corresponding symbol appears in the "Signal/error display" area of the display.

Caution

Frequent disengagement from the mains voltage, e.g. via a relay, can result in damage to the pump electronics and in the breakdown of the pump. The dosing accuracy is also reduced as a result of internal start procedures.

Do not control the pump via the mains voltage for dosing purposes!

Only use the "External stop" function to start and stop the pump!

The contact type is factory-set to normally open contact (NO). In the "Setup > Inputs/Outputs > External stop" menu, the setting can be changed to normally closed contact (NC).

6.16.3 Empty and Low level signals

In order to monitor the filling level in the tank, a dual-level sensor can be connected to the pump. The pump responds to the signals as follows:

Sensor signal	Pump status
Low level	• Display is yellow • ⧗ Flashes • Pump continues running
Empty	• Display is red • ▼ Flashes • Pump stops

Caution When the tank is filled up again, the pump restarts automatically!

Both signal inputs are allocated to the normally open contact (NO) in the factory. They can be re-allocated in the "Setup > Inputs/Outputs" menu to normally closed contact (NC).

6.17 Basic settings

All settings can be reset to the settings default upon delivery in the "Setup > Basic settings" menu.

Selecting "Save customer settings" saves the current configuration to the memory. This can then be activated using "Load customer settings".

The memory always contains the previously saved configuration. Older memory data is overwritten.

7. Service

In order to ensure a long service life and dosing accuracy, wearing parts such as diaphragms and valves must be regularly checked for signs of wear. Where necessary, replace worn parts with original spare parts made from suitable materials.

Should you have any questions, please contact your service partner.

Warning

Maintenance work must only be carried out by qualified staff.

7.1 Regular maintenance

Interval	Task
Daily	Check, if liquid leaks from the drain opening (fig. 41, pos. 11) and if the drain opening is blocked or soiled. If so, follow the instructions given in section *7.6 Diaphragm breakage*.
	Check, if liquid leaks from the dosing head or valves. If necessary, tighten dosing head screws with a torque wrench at 4 Nm. If necessary, tighten valves and cap nuts, or perform service (see *7.4 Perform service*).
	Check, if a service requirement is present at the pump display. If so, follow the instructions given in section *7.3 Service system*.
Weekly	Clean all pump surfaces with a dry and clean cloth.
Every 3 months	Check dosing head screws. If necessary, tighten dosing head screws with a torque wrench at 4 Nm. Replace damaged screws immediately.

7.2 Cleaning

If necessary, clean all pump surfaces with a dry and clean cloth.

7.3 Service system

According to the motor runtime or after a defined period of operation, service requirements will appear. Service requirements appear regardless of the current operating state of the pump and do not affect the dosing process.

Service requirement	Motor runtime [h]*	Time interval [months]*
Service soon!	7500	23
Service now!	8000	24

* Since the last service system reset

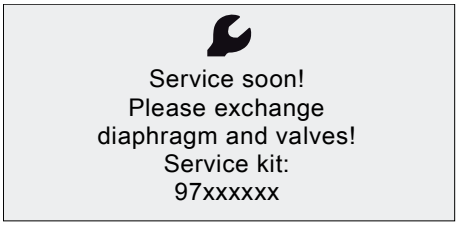

TM04 1131 1110

Fig. 39 Service soon!

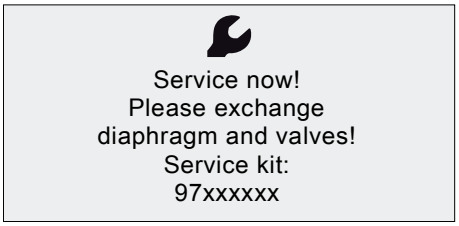

TM04 1131 1110

Fig. 40 Service now!

Caution For media which result in increased wear, the service interval must be shortened.

The service requirement signals when the replacement of wearing parts is due and displays the number of the service kit. Press the click wheel to temporarily hide the service prompt.

When the "Service now!" message appears (displayed daily), the pump must be serviced immediately. The symbol appears in the "Operation" menu.

The number of the service kit required is also displayed in the "Info" menu.

7.4 Perform service

Only spare parts and accessories from Grundfos should be used for maintenance. The usage of non-original spare parts and accessories renders any liability for resulting damages null and void.

Further information about carrying out maintenance can be found in the service kit catalogue on our homepage. See www.grundfos.com.

Warning

Risk of chemical burns!

When dosing dangerous media, observe the corresponding precautions in the safety data sheets!

Wear protective clothing (gloves and goggles) when working on the dosing head, connections or lines!

Do not allow any chemicals to leak from the pump. Collect and dispose of all chemicals correctly!

Caution

Before any work to the pump, the pump must be in the "Stop" operating state or be disconnected from the power supply. The system must be pressureless!

7.4.1 Dosing head overview

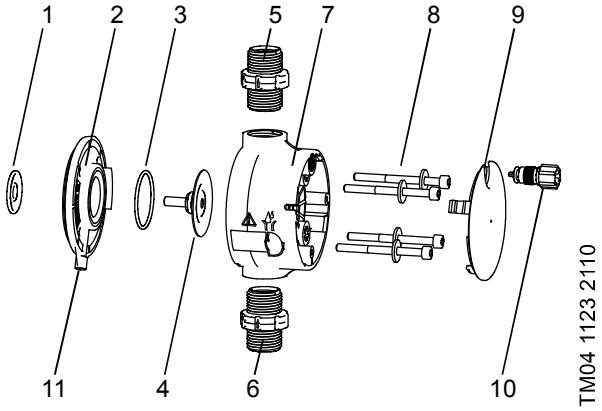

Fig. 41 Changing the diaphragm and valves

1	Safety diaphragm
2	Flange
3	O-ring
4	Diaphragm
5	Valve on discharge side
6	Valve on suction side
7	Dosing head
8	Screws with discs
9	Cover
10	Deaeration valve
11	Drain opening

7.4.2 Dismantling the diaphragm and valves

Warning

Danger of explosion, if dosing liquid has entered the pump housing!

If the diaphragm is possibly damaged, don't connect the pump to the power supply! Proceed as described in section *7.6 Diaphragm breakage*!

This section refers to fig. 41.

1. Make system pressureless.
2. Empty dosing head before maintenance and flush it if necessary.
3. Set pump to "Stop" ■ operating state using the [Start/stop] key.
4. Press the [Start/stop] and [100%] keys at the same time to put the diaphragm into "out" position.
   – Symbol (– must be displayed (see fig. 14).
5. Take suitable steps to ensure that the returning liquid is safely collected.
6. Dismantle suction, pressure and deaeration hose.
7. Dismantle valves on suction and discharge side (5, 6).
8. Remove the cover (9).
9. Loosen screws (8) on the dosing head (7) and remove with discs.
10. Remove the dosing head (7).
11. Unscrew diaphragm (4) counter-clockwise and remove with flange (2).
12. Make sure the drain opening (11) is not blocked or soiled. Clean if necessary.
13. Check the safety diaphragm (1) for wear and damage. Replace if necessary.

If nothing indicates that dosing liquid has entered the pump housing, go on as described in section *7.4.3 Reassembling the diaphragm and valves*. Otherwise proceed as described in section *7.6.2 Dosing liquid in the pump housing*.

7.4.3 Reassembling the diaphragm and valves

The pump must only be reassembled, if nothing indicates that dosing liquid has entered the pump housing. Otherwise proceed as described in section *7.6.2 Dosing liquid in the pump housing*.

This section refers to fig. 41.

1. Attach flange (2) correctly and screw on new diaphragm (4) clockwise.
   – Make sure that the O-ring (3) is seated correctly!
2. Press the [Start/stop] and [100%] keys at the same time to put the diaphragm into "in" position.
   – Symbol)– must be displayed (see fig. 14).
3. Attach the dosing head (7).
4. Install screws with discs (8) and cross-tighten with a torque wrench.
   – Torque: 4 Nm.
5. Attach the cover (9).
6. Install new valves (5, 6).
   – Do not interchange valves and pay attention to direction of arrow.
7. Connect suction, pressure and deaeration hose (see section *4.2 Hydraulic connection*)
8. Press the [Start/stop] key to leave the service mode.

Caution

Tighten the dosing head screws with a torque wrench once before commissioning and again after 2-5 operating hours at 4 Nm.

9. Deaerate dosing pump (see section *5.2 Deaerating the pump*).
10. Please observe the notes on commissioning in section *5. Startup*!

7.5 Resetting the service system

After performing the service, the service system must be reset using the "Info > Reset service system" function.

7.6 Diaphragm breakage

If the diaphragm leaks or is broken, dosing liquid escapes from the drain opening (fig. 41, pos. 11) on the dosing head.

In case of diaphragm breakage, the safety diaphragm (fig. 41, pos. 1) protects the pump housing against ingress of dosing liquid.

When dosing crystallising liquids the drain opening can be blocked by crystallisation. If the pump is not taken out of operation immediately, a pressure can build up between the diaphragm (fig. 41, pos. 4) and the safety diaphragm in the flange (fig. 41, pos. 2). The pressure can press dosing liquid through the safety diaphragm into the pump housing.

Most dosing liquids don't cause any danger when entering the pump housing. However a view liquids can cause a chemical reaction with inner parts of the pump. In the worst case, this reaction can produce explosive gases in the pump housing.

Warning

Danger of explosion, if dosing liquid has entered the pump housing!

Operation with damaged diaphragm can lead to dosing liquid entering the pump housing.

In case of diaphragm breakage, immediately separate the pump from the power supply!

Make sure the pump cannot be put back into operation by accident!

Dismantle the dosing head without connecting the pump to the power supply and make sure no dosing liquid has entered the pump housing. Proceed as described in section *7.6.1 Dismantling in case of diaphragm breakage*.

To avoid any danger resulting from diaphragm breakage, observe the following:

- Perform regular maintenance. See section *7.1 Regular maintenance*.
- Never operate the pump with blocked or soiled drain opening.
  – If the drain opening is blocked or soiled, proceed as described in section *7.6.1 Dismantling in case of diaphragm breakage*.
- Never attach a hose to the drain opening. If a hose is attached to the drain opening, it is impossible to recognise escaping dosing liquid.
- Take suitable precautions to prevent harm to health and damage to property from escaping dosing liquid.
- Never operate the pump with damaged or loose dosing head screws.

7.6.1 Dismantling in case of diaphragm breakage

Warning

Danger of explosion, if dosing liquid has entered the pump housing!

Do not connect the pump to the power supply!

This section refers to fig. 41.

1. Make system pressureless.
2. Empty dosing head before maintenance and flush it if necessary.
3. Take suitable steps to ensure that the returning liquid is safely collected.
4. Dismantle suction, pressure and deaeration hose.
5. Remove the cover (9).
6. Loosen screws (8) on the dosing head (7) and remove with discs.
7. Remove the dosing head (7).
8. Unscrew diaphragm (4) counter-clockwise and remove with flange (2).
9. Make sure the drain opening (11) is not blocked or soiled. Clean if necessary.
10. Check the safety diaphragm (1) for wear and damage. Replace if necessary.

If nothing indicates that dosing liquid has entered the pump housing, go on as described in section *7.4.3 Reassembling the diaphragm and valves*. Otherwise proceed as described in section *7.6.2 Dosing liquid in the pump housing*.

7.6.2 Dosing liquid in the pump housing

Warning

Danger of explosion!

Immediately separate the pump from the power supply!

Make sure the pump cannot be put back into operation by accident!

If dosing liquid has entered the pump housing:

- Send the pump to Grundfos for repair, following the instructions given in section *7.7 Repairs*.
- If a repair isn't economically reasonable, dispose of the pump observing the information in section *9. Disposal*.

7.7 Repairs

Warning

The pump housing must only be opened by personnel authorised by Grundfos!

Repairs must only be carried out by authorised and qualified personnel!

Switch off the pump and disconnect it from the voltage supply before carrying out maintenance work and repairs!

After consulting Grundfos, please send the pump, together with the safety declaration completed by a specialist, to Grundfos. The safety declaration can be found at the end of these instructions. It must be copied, completed and attached to the pump.

The pump must be cleaned prior to dispatch!

Caution If dosing liquid has possibly entered the pump housing, state that explicitly in the safety declaration! Observe section *7.6 Diaphragm breakage*.

If the above requirements are not met, Grundfos may refuse to accept delivery of the pump. The shipping costs will be charged to the sender.

8. Faults



In the event of faults in the dosing pump, a warning or an alarm is triggered.
The corresponding fault symbol flashes in the "Operation" menu, see section *8.1 List of faults*.
The cursor jumps to the "Alarm" main menu symbol.
Press the click wheel to open the "Alarm" menu and, where necessary, faults to be acknowledged will be acknowledged.

A yellow display indicates a warning and the pump continues running.

A red display indicates an alarm and the pump is stopped.

The last 10 faults are stored in the "Alarm" main menu. When a new fault occurs, the oldest fault is deleted.

The two most recent faults are shown in the display, you can scroll through all the other faults. The time and cause of the fault are displayed.

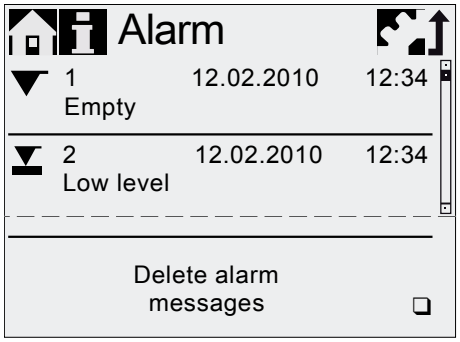

TM04 1109 1010

The list of faults can be deleted at the end of the list.

If there is a service requirement, this appears when the "Alarm" menu is opened. Press the click wheel to temporarily close the service prompt (see section *7.3 Service system*).

8.1 List of faults

8.1.1 Faults with error message

Display in the "Alarm" menu	Possible cause	Possible remedy
▼ Empty (Alarm)	• Dosing medium tank empty	• Fill tank. • Check contact setting (NO/NC).
⧗ Low level (Warning)	• Dosing medium tank almost empty	
Overpressure (Alarm)	• Discharge valve blocked • Isolating valve in discharge line closed • Pressure peaks due to high viscosity • Max. pressure set too low (see section *6.8 Pressure monitoring*)	• Replace valve if necessary (see section *7.4 Perform service*). • Check flow direction of valves (arrow) and correct if necessary. • Open the isolating valve (on the discharge side). • Enlarge diameter of discharge line. • Change pressure setting (see section *6.8 Pressure monitoring*).
Low backpressure (Warning/alarm*)	• Faulty diaphragm • Broken discharge line • Pressure differential between suction and discharge side too low • Leakage in the pressure loading valve at Q < 1 l/h • Deaeration valve open	• Change the diaphragm (see section *7.4 Perform service*). • Check discharge line and repair if necessary. • Install additional spring-loaded valve (approx. 3 bar) on the discharge side. • Close the deaeration valve.
Air bubble (Warning)	• Broken/leaky suction line • Strongly degassing medium • Tank dosing medium empty	• Check suction line and repair if necessary. • Provide positive inlet pressure (place dosing medium tank above the pump). • Enable "SlowMode" (see section *6.6 SlowMode*). • Fill tank.
👁 Cavitation (Warning)	• Blocked/constricted/squeezed suction line • Blocked/constricted suction valve • Suction lift too high • Viscosity too high	• Enable "SlowMode" (see section *6.6 SlowMode*). • Reduce suction lift. • Increase suction hose diameter. • Check suction line and open isolating valve if necessary.
Suct. valve leak (Warning)	• Leaky/dirty suction valve • Deaeration valve open	• Check valve and tighten it up. • Flush system. • Replace valve if necessary (see section *7.4 Perform service*). • Check O-ring position. • Install filter in suction line. • Close the deaeration valve.
Disch. valve leak (Warning)	• Leaky/dirty discharge valve • Leakage in the pressure loading valve • Deaeration valve open	• Check valve and tighten it up. • Flush system. • Replace valve if necessary (see section *7.4 Perform service*). • Check O-ring position. • Install screen in suction line. • Close the deaeration valve. • Install spring-loaded valve on the discharge side.
Flow deviation (Warning)	• Considerable deviation between target and actual flow • Pump not or incorrectly calibrated	• Check installation. • Calibrate the pump (see section *5.3 Calibrating the pump*).

Display in the "Alarm" menu	Possible cause	Possible remedy
Pressure sensor (Warning)	• Broken "FlowControl" cable (see fig. 11) • Sensor defect • Pressure sensor not correctly calibrated.	• Check plug connection. • Change sensor if necessary. • Calibrate pressure sensor correctly (see section *6.8.2 Calibration of pressure sensor*).
Motor blocked (Alarm)	• Backpressure greater than nominal pressure • Damage to gears	• Reduce backpressure. • Arrange for repair of gears, if necessary.
BUS Bus error (Alarm)	• Fieldbus communication error	• Check cables for correct specification and damage; replace if necessary. • Check cable routing and shielding; correct if necessary.
E-Box (Alarm)	• E-Box connection error • Faulty E-Box	• Check plug connection. • Replace E-Box if necessary.
Cable break (Alarm)	• Defect in analog cable 4-20 mA (input current < 2 mA)	• Check cable/plug connections and replace, if necessary. • Check signal transmitter.
Service now (Warning)	• Time interval for service expired	• Perform service (see section *7.4 Perform service*).

* Depending on setting

8.1.2 General faults

Fault	Possible cause	Possible remedy
Dosing flow too high	Inlet pressure greater than backpressure	Install additional spring-loaded valve (approx. 3 bar) on the discharge side.
		Increase pressure differential.
	Incorrect calibration	Calibrate the pump (see section *5.3 Calibrating the pump*).
No dosing flow or dosing flow too low	Air in dosing head	Deaerate the pump.
	Faulty diaphragm	Change the diaphragm (see section *7.4 Perform service*).
	Leakage/fracture in lines	Check and repair lines.
	Valves leaking or blocked	Check and clean valves.
	Valves installed incorrectly	Check that the arrow on the valve housing is pointing in the direction of flow. Check whether all O-rings are installed correctly.
	Blocked suction line	Clean suction line/install filter.
	Suction lift too high	Reduce suction lift.
		Install priming aid.
		Enable "SlowMode" (see section *6.6 SlowMode*).
	Viscosity too high	Enable "SlowMode" (see section *6.6 SlowMode*).
		Use hose with larger diameter.
		Install spring-loaded valve on the discharge side.
	Faulty calibration	Calibrate the pump (see section *5.3 Calibrating the pump*).
	Deaeration valve open	Close the deaeration valve.
Irregular dosing	Valves leaking or blocked	Tighten up valves, replace valves if necessary (see section *7.4 Perform service*).
	Backpressure fluctuations	Keep backpressure constant.
		Activate "AutoFlowAdapt" (only DDA-FCM).
Liquid escaping from the drain opening on the flange	Faulty diaphragm	Immediately separate the pump from the power supply! Observe section *7. Service* and especially section *7.6 Diaphragm breakage*.
Liquid escaping	Dosing head screws not tightened	Tighten up screws (see section *4.2 Hydraulic connection*).
	Valves not tightened	Tighten up valves/union nuts (see section *4.2 Hydraulic connection*).
Pump not sucking in	Suction lift too high	Reduce suction lift; if necessary, provide positive inlet pressure.
	Backpressure too high	Open the deaeration valve.
	Soiled valves	Flush system, replace valves if necessary (see section *7.4 Perform service*).

9. Disposal



This product or parts of it must be disposed of in an environmentally sound way.
Use appropriate waste collection services.
If this is not possible, contact the nearest Grundfos company or service workshop.

Argentina
Bombas GRUNDFOS de Argentina S.A.
Ruta Panamericana km. 37.500 Centro Industrial Garin
1619 - Garin Pcia. de B.A.
Phone: +54-3327 414 444
Telefax: +54-3327 411 111

Australia
GRUNDFOS Pumps Pty. Ltd.
P.O. Box 2040
Regency Park
South Australia 5942
Phone: +61-8-8461-4611
Telefax: +61-8-8340 0155

Austria
GRUNDFOS Pumpen Vertrieb Ges.m.b.H.
Grundfosstraße 2
A-5082 Grödig/Salzburg
Tel.: +43-6246-883-0
Telefax: +43-6246-883-30

Belgium
N.V. GRUNDFOS Bellux S.A.
Boomsesteenweg 81-83
B-2630 Aartselaar
Tél.: +32-3-870 7300
Télécopie: +32-3-870 7301

Belarus
Представительство ГРУНДФОС в Минске
220125, Минск
ул. Шафарнянская, 11, оф. 56
Тел.: +7 (375 17) 286 39 72, 286 39 73
Факс: +7 (375 17) 286 39 71
E-mail: minsk@grundfos.com

Bosnia/Herzegovina
GRUNDFOS Sarajevo
Trg Heroja 16,
BiH-71000 Sarajevo
Phone: +387 33 713 290
Telefax: +387 33 659 079
e-mail: grundfos@bih.net.ba

Brazil
BOMBAS GRUNDFOS DO BRASIL
Av. Humberto de Alencar Castelo Branco, 630
CEP 09850 - 300
São Bernardo do Campo - SP
Phone: +55-11 4393 5533
Telefax: +55-11 4343 5015

Bulgaria
Grundfos Bulgaria EOOD
Slatina District
Iztochna Tangenta street no. 100
BG - 1592 Sofia
Tel. +359 2 49 22 200
Fax. +359 2 49 22 201
email: bulgaria@grundfos.bg

Canada
GRUNDFOS Canada Inc.
2941 Brighton Road
Oakville, Ontario
L6H 6C9
Phone: +1-905 829 9533
Telefax: +1-905 829 9512

China
Grundfos Alldos
Dosing & Disinfection
ALLDOS (Shanghai) Water Technology Co. Ltd.
West Unit, 1 Floor, No. 2 Building (T 4-2)
278 Jinhu Road, Jin Qiao Export Processing Zone
Pudong New Area
Shanghai, 201206
Phone: +86 21 5055 1012
Telefax: +86 21 5032 0596
E-mail: grundfosalldos-CN@grundfos.com

China
GRUNDFOS Pumps (Shanghai) Co. Ltd.
10F The Hub, No. 33 Suhong Road
Minhang District
Shanghai 201106
PRC
Phone: +86-21 6122 5222
Telefax: +86-21 6122 5333

Croatia
GRUNDFOS CROATIA d.o.o.
Cebini 37, Buzin
HR-10010 Zagreb
Phone: +385 1 6595 400
Telefax: +385 1 6595 499
www.hr.grundfos.com

Czech Republic
GRUNDFOS s.r.o.
Čapkovského 21
779 00 Olomouc
Phone: +420-585-716 111
Telefax: +420-585-716 299

Denmark
GRUNDFOS DK A/S
Martin Bachs Vej 3
DK-8850 Bjerringbro
Tlf.: +45-87 50 50 50
Telefax: +45-87 50 51 51
E-mail: info_GDK@grundfos.com
www.grundfos.com/DK

Estonia
GRUNDFOS Pumps Eesti OÜ
Peterburi tee 92G
11415 Tallinn
Tel: + 372 606 1690
Fax: + 372 606 1691

Finland
OY GRUNDFOS Pumput AB
Trukkikuja 1
FI-01360 Vantaa
Phone: +358-(0)207 889 500
Telefax: +358-(0)207 889 550

France
Pompes GRUNDFOS Distribution S.A.
Parc d'Activités de Chesnes
57, rue de Malacombe
F-38290 St. Quentin Fallavier (Lyon)
Tél.: +33-4 74 82 15 15
Télécopie: +33-4 74 94 10 51

Germany
GRUNDFOS Water Treatment GmbH
Reetzstraße 85
D-76327 Pfinztal (Söllingen)
Tel.: +49 7240 61-0
Telefax: +49 7240 61-177
E-mail: gwt@grundfos.com

Germany
GRUNDFOS GMBH
Schlüterstr. 33
40699 Erkrath
Tel.: +49-(0) 211 929 69-0
Telefax: +49-(0) 211 929 69-3799
E-mail: infoservice@grundfos.de
Service in Deutschland:
E-mail: kundendienst@grundfos.de

Greece
GRUNDFOS Hellas A.E.B.E.
20th km. Athinon-Markopoulou Av.
P.O. Box 71
GR-19002 Peania
Phone: +0030-210-66 83 400
Telefax: +0030-210-66 46 273

Hong Kong
GRUNDFOS Pumps (Hong Kong) Ltd.
Unit 1, Ground floor
Siu Wai Industrial Centre
29-33 Wing Hong Street &
68 King Lam Street, Cheung Sha Wan
Kowloon
Phone: +852-27861706 / 27861741
Telefax: +852-27858664

Hungary
GRUNDFOS Hungária Kft.
Park u. 8
H-2045 Törökbálint,
Phone: +36-23 511 110
Telefax: +36-23 511 111

India
GRUNDFOS Pumps India Private Limited
118 Old Mahabalipuram Road
Thoraipakkam
Chennai 600 097
Phone: +91-44 4596 6800

Indonesia
PT. GRUNDFOS POMPA
Graha Intirub Lt. 2 & 3
Jln. Cililitan Besar No.454. Makasar,
Jakarta Timur
ID-Jakarta 13650
Phone: +62 21-469-51900
Telefax: +62 21-460 6910 / 460 6901

Ireland
GRUNDFOS (Ireland) Ltd.
Unit A, Merrywell Business Park
Ballymount Road Lower
Dublin 12
Phone: +353-1-4089 800
Telefax: +353-1-4089 830

Italy
GRUNDFOS Pompe Italia S.r.l.
Via Gran Sasso 4
I-20060 Truccazzano (Milano)
Tel.: +39-02-95838112
Telefax: +39-02-95309290 / 95838461

Japan
GRUNDFOS Pumps K.K.
Gotanda Metalion Bldg. 5F,
5-21-15, Higashi-gotanda
Shiagawa-ku, Tokyo,
141-0022 Japan
Phone: +81 35 448 1391
Telefax: +81 35 448 9619

Korea
GRUNDFOS Pumps Korea Ltd.
6th Floor, Aju Building 679-5
Yeoksam-dong, Kangnam-ku, 135-916
Seoul, Korea
Phone: +82-2-5317 600
Telefax: +82-2-5633 725

Latvia
SIA GRUNDFOS Pumps Latvia
Deglava biznesa centrs
Augusta Deglava ielā 60, LV-1035, Rīga,
Tālr.: + 371 714 9640, 7 149 641
Fakss: + 371 914 9646

Lithuania
GRUNDFOS Pumps UAB
Smolensko g. 6
LT-03201 Vilnius
Tel: + 370 52 395 430
Fax: + 370 52 395 431

Malaysia
GRUNDFOS Pumps Sdn. Bhd.
7 Jalan Peguam U1/25
Glenmarie Industrial Park
40150 Shah Alam
Selangor
Phone: +60-3-5569 2922
Telefax: +60-3-5569 2866

Mexico
Bombas GRUNDFOS de México S.A. de C.V.
Boulevard TLC No. 15
Parque Industrial Stiva Aeropuerto
Apodaca, N.L. 66600
Phone: +52-81-8144 4000
Telefax: +52-81-8144 4010

Netherlands
GRUNDFOS Netherlands
Veluwezoom 35
1326 AE Almere
Postbus 22015
1302 CA ALMERE
Tel.: +31-88-478 6336
Telefax: +31-88-478 6332
E-mail: info_gnl@grundfos.com

New Zealand
GRUNDFOS Pumps NZ Ltd.
17 Beatrice Tinsley Crescent
North Harbour Industrial Estate
Albany, Auckland
Phone: +64-9-415 3240
Telefax: +64-9-415 3250

Norway
GRUNDFOS Pumper A/S
Strømsveien 344
Postboks 235, Leirdal
N-1011 Oslo
Tlf.: +47-22 90 47 00
Telefax: +47-22 32 21 50

Poland
GRUNDFOS Pompy Sp. z o.o.
ul. Klonowa 23
Baranowo k. Poznania
PL-62-081 Przeźmierowo
Tel: (+48-61) 650 13 00
Fax: (+48-61) 650 13 50

Portugal
Bombas GRUNDFOS Portugal, S.A.
Rua Calvet de Magalhães, 241
Apartado 1079
P-2770-153 Paço de Arcos
Tel.: +351-21-440 76 00
Telefax: +351-21-440 76 90

Romania
GRUNDFOS Pompe România SRL
Bd. Biruintei, nr 103
Pantelimon county Ilfov
Phone: +40 21 200 4100
Telefax: +40 21 200 4101
E-mail: romania@grundfos.ro

Russia
ООО Грундфос
Россия, 109544 Москва, ул. Школьная 39
Тел. (+7) 495 737 30 00, 564 88 00
Факс (+7) 495 737 75 36, 564 88 11
E-mail grundfos.moscow@grundfos.com

Serbia
GRUNDFOS Predstavništvo Beograd
Dr. Milutina Ivkovića 2a/29
YU-11000 Beograd
Phone: +381 11 26 47 877 / 11 26 47 496
Telefax: +381 11 26 48 340

Singapore
GRUNDFOS (Singapore) Pte. Ltd.
25 Jalan Tukang
Singapore 619264
Phone: +65-6681 9688
Telefax: +65-6681 9689

Slovakia
GRUNDFOS s.r.o.
Prievozská 4D
821 09 BRATISLAVA
Phona: +421 2 5020 1426
sk.grundfos.com

Slovenia
GRUNDFOS LJUBLJANA, d.o.o.
Leskoškova 9e, 1122 Ljubljana
Phone: +386 (0) 1 568 06 10
Telefax: +386 (0)1 568 0619
E-mail: tehnika-si@grundfos.com

South Africa
Grundfos (PTY) Ltd.
Corner Mountjoy and George Allen Roads
Wilbart Ext. 2
Bedfordview 2008
Phone: (+27) 11 579 4800
Fax: (+27) 11 455 6066
E-mail: lsmart@grundfos.com

Spain
Bombas GRUNDFOS España S.A.
Camino de la Fuentecilla, s/n
E-28110 Algete (Madrid)
Tel.: +34-91-848 8800
Telefax: +34-91-628 0465

Sweden
GRUNDFOS AB
(Box 333) Lunnagårdsgatan 6
431 24 Mölndal
Tel.: +46 31 332 23 000
Telefax: +46 31-331 94 60

Switzerland
GRUNDFOS ALLDOS International AG
Schönmattstraße 4
CH-4153 Reinach
Tel.: +41-61-717 5555
Telefax: +41-61-717 5500
E-mail:
grundfosalldos-CH@grundfos.com

Switzerland
GRUNDFOS Pumpen AG
Bruggacherstrasse 10
CH-8117 Fällanden/ZH
Tel.: +41-44-806 8111
Telefax: +41-44-806 8115

Taiwan
GRUNDFOS Pumps (Taiwan) Ltd.
7 Floor, 219 Min-Chuan Road
Taichung, Taiwan, R.O.C.
Phone: +886-4-2305 0868
Telefax: +886-4-2305 0878

Thailand
GRUNDFOS (Thailand) Ltd.
92 Chaloem Phrakiat Rama 9 Road,
Dokmai, Pravej, Bangkok 10250
Phone: +66-2-725 8999
Telefax: +66-2-725 8998

Turkey
GRUNDFOS POMPA San. ve Tic. Ltd. Sti.
Gebze Organize Sanayi Bölgesi
Ihsan dede Caddesi,
2. yol 200. Sokak No. 204
41490 Gebze/ Kocaeli
Phone: +90 - 262-679 7979
Telefax: +90 - 262-679 7905
E-mail: satis@grundfos.com

Ukraine
Бізнес Центр Європа
Столичне шосе, 103
м. Київ, 03131, Україна
Телефон: (+38 044) 237 04 00
Факс.: (+38 044) 237 04 01
E-mail: ukraine@grundfos.com

United Arab Emirates
GRUNDFOS Gulf Distribution
P.O. Box 16768
Jebel Ali Free Zone
Dubai
Phone: +971-4- 8815 166
Telefax: +971-4-8815 136

United Kingdom
GRUNDFOS Pumps Ltd.
Grovebury Road
Leighton Buzzard/Beds. LU7 4TL
Phone: +44-1525-850000
Telefax: +44-1525-850011

U.S.A.
GRUNDFOS Pumps Corporation
17100 West 118th Terrace
Olathe, Kansas 66061
Phone: +1-913-227-3400
Telefax: +1-913-227-3500

Uzbekistan
Grundfos Tashkent, Uzbekistan The Representative Office of Grundfos Kazakhstan in Uzbekistan
38a, Oybek street, Tashkent
Телефон: (+998) 71 150 3290 / 71 150 3291
Факс: (+998) 71 150 3292

Addresses revised 25.01.2016

© Copyright Grundfos Holding A/S

The name Grundfos, the Grundfos logo, and **be think innovate** are registered trademarks owned by Grundfos Holding A/S or Grundfos A/S, Denmark. All rights reserved worldwide.

95724708 0516

ECM: 1183454

Section 3.4.2

Urea & Alkalinity Dosing

Section 3.4.2.1

Plastic Tank

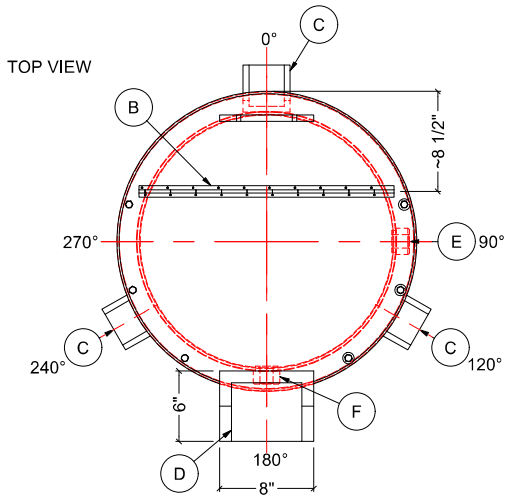

NOTES:

1. TANK IS MANUFACTURED FROM HDPE. (2.2 SG)
2. ALL TANK DIMENSIONS ARE SUBJECT TO A +/-3% TOLERENCE.
3. FLEXIBLE COUPLINGS ARE REQUIRED FOR ALL EXTERNAL PIPING.
4. ALL EXTERNAL PIPING AND ACCESSORIES MUST BE FULLY SUPPORTED TO AVOID STRESSING THE TANK.

MATERIALS LIST		
ITEMS	DESCRIPTION	NOTES
A	OT-60 OPEN TOP TANK	
B	2/3rds BOLTED, 1/3rd HDPE HINGED LID FOR OT-60	
C	HDPE WELDED HOLD DOWN LUG	3 PLACES
D	HDPE MIXER MOUNT #2	
E	1" FNPT HDPE WELDED BOSS (HALF COUPLING)	
F	1" FNPT HDPE WELDED BOSS (HALF COUPLING)	

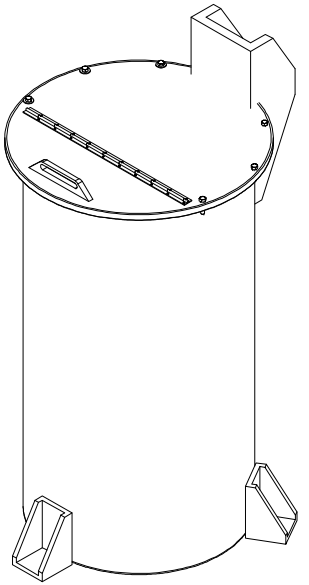

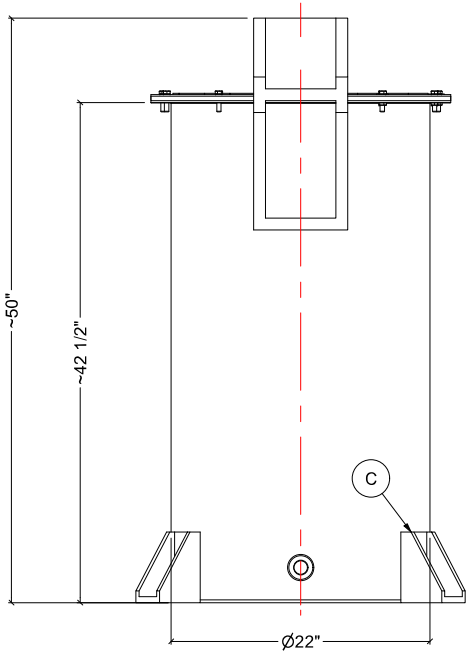

FRONT VIEW

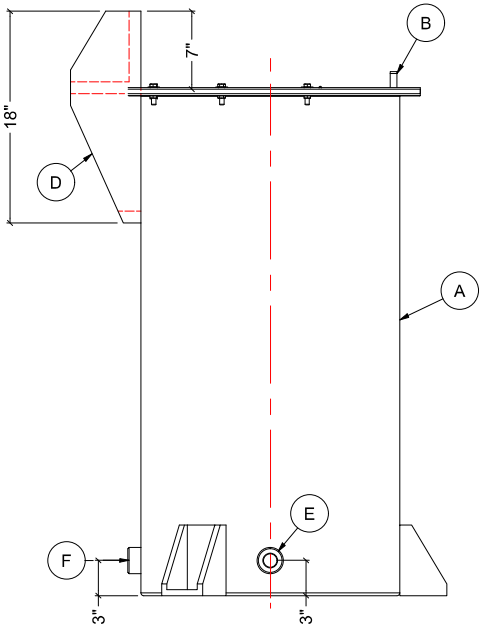

SIDE VIEW

REV	DATE	DESCRIPTION	BY	APPD	REVD

REVISIONS

CUSTOMER: H2FLOW

TITLE: 60 IG OPEN TOP TANK W/ MIXER MOUNT & HOLD DOWNS

ACO JOB NO: 80139
PURCHASE ORDER NO:
PURCHASER'S EQUIP. NO:

THIS DRAWING IS THE PROPERTY OF ROTOPLAST INC. AND SHALL NOT BE COPIED OR TRANSFERRED WITHOUT THE WRITTEN CONSENT OF ROTOPLAST INC.

ENGINEERS SEAL

ACO CONTAINER SYSTEMS
DIVISION OF ROTOPLAST INC.
PICKERING - ONTARIO - CANADA
ACO CONTAINER SYSTEMS
DIVISION OF ROTOPLAST INC.
794 MCKAY RD.
PICKERING, ONTARIO, CANADA
TEL. 905-683-8222
FAX 905-683-2969

DESIGNED	
DRAWN	WM
CHECKED	
APPROVED	
SCALE	N.T.S.
DATE	MAY-17-2022

DWG No: OT-60-80139
REV: 0

Section 3.4.2.2

Mixer and Motor

CONSTRUCTION				
Drive	Electric Motor Round Body 0.5 HP @ 1725 rpm 1/60/110-220V / TEFC with wiring, Gear Reducer 11 to 1 Ratio @ 159 rpm			
Mount	1.0 in. Dia. Shaft Clamp Mount (Aluminum)	**Top Impeller**	9" diameter, Dynaflow Blade (316SS)	Spacing 14"
Shaft	1" dia. 41" long (316SS)	**Bottom Impeller**	9" diameter, Dynaflow Blade (316SS)	Off Bottom 9"

CUSTOMER DATA			
Tank Size	Cyl 22" Dia. x 44" Ht	**Mixing Class**	Blending
Volume	60 Gallons	**Mixing Level**	Mild
Temperature	Ambient	**Pressure**	Atm.
Baffles	None	**Torque**	15 [lb.inch]

Material	Specific Gravity	Viscosity (cps)	% WT	Particle Size	Settling Rate
Fluid	**1.20**	**1000**	**100%**	**0.00**	
	1.20	**1000**	**100%**	**0.00**	

DYNAMIX AGITATORS

Installation, Operation & Maintenance Manual

DMX Series
PORTABLE MIXER

Important Safety Instructions

This Installation and Operation Manual Includes **Important Warnings and Safety Information**.

Be sure to keep this manual with equipment and ensure all operators read the enclosed information.

Table of Contents

Important Safety Warnings 1
Receiving, Inspection & Storage 3
Operation Instructions 4
Start-up Checklist 5
Assembly & Installation 6
- Clamp Mount 6
- Plate Mount 8

Parts, Maintenance & Service 11
- Clamp Mount 11
- Plate Mount or Flange 12
- General Information Regarding Electric Motors 13
- General Information Regarding Air Motors 15

Troubleshooting Guide 18
Terms & Conditions 19
Warranty 20

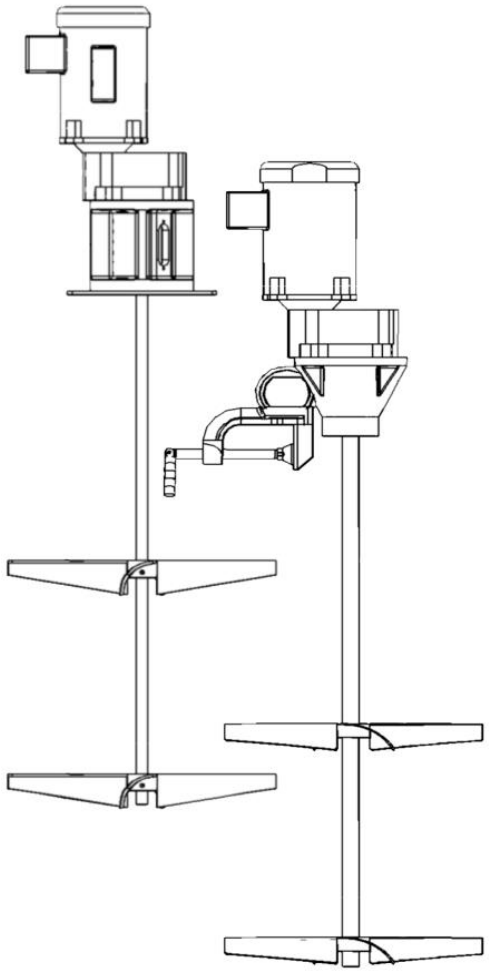

DMX SERIES
Portable Mixer

Dynamix Agitators Inc.

150 - 14480 River Road,
Richmond, B.C, Canada V6V 1L4
Ph. 604.244.3771 Fax 604.244.3772

info@dynamixinc.com
www.dynamixinc.com

Important Safety Warnings

Please Read These Warnings Carefully Before Unpacking the Mixer



The following safety instructions must be COMPLETELY REVIEWED AND FOLLOWED before operating any Dynamix Mixer. FAILURE TO FOLLOW THESE INSTRUCTIONS COULD RESULT IN SERIOUS INJURY

In the installation, operation and maintenance of the Mixer, SAFETY comes first.

ALL safety precautions listed in this manual MUST be followed by all personnel working on or with the equipment if serious injury is to be avoided.

1. This mixer is intended for professional use only.
2. The installation of this equipment does not normally require the services of factory personnel. If required, these services can be agreed upon before or after purchase. These services are available from Dynamix Agitators by contacting the Sales Department.
3. Adequate installation, maintenance, and safety instructions must be given by the operator to personnel directly responsible for the operation of the drive and accessory equipment. In addition, the procedures set forth in the operating instructions must be carefully followed.
4. All service personnel MUST be knowledgeable relative to the equipment before performing any maintenance or repair work. Use proper clothing, tools and methods of handling to prevent serious accidents.
5. The operator is responsible for furnishing and installing any guards or other safety equipment needed to protect operating personnel as required by Occupational Safety and Health Administration standards (OSHA) or other applicable safety regulations. This equipment normally is not furnished by Dynamix Agitators except when specified as part of the order. In all cases, however, the operator has the responsibility of complying with all local, state / province and national fire, electrical, and safety regulations when installing the equipment.
6. Each mixer is selected for a specific application. **Do not use this mixer in applications other than that for which was designed and quoted. Applying a mixer in applications outside of intended use may result in overload conditions, which will damage the mixer.** If you are unsure of the appropriate application, please contact Dynamix Agitators with the relevant mixer serial number.
7. Do not connect to air motor to power source until this Manual is followed and the mixer is properly assembled and installed as per design.
8. Your mixer has been tested and checked for shaft straightness before shipping. Care must be taken while handling the shaft to ensure proper operation.
9. Do not alter or modify this mixer. Any alteration or modification will void the mixer's Warranty.
10. If the mixer features a detachable coupling, ensure that the coupling is fully engaged and seated in the fully rotated position of the coupling lock (rotated 10 degrees).
11. Ensure all equipment and personnel are clear of all rotating parts.
12. Do not touch rotating mixer parts.
13. If your mixer requires lifting by eyebolt or by another method, ensure that eyebolts or other means are securely fastened before lifting the mixer.
14. Some electric motors will run excessively hot under continued load. Always use lifting handles to lift modular drive segments off their coupling.

15. Do not exceed the working air pressure of 100 psi for air motors
16. Check equipment daily. Repair and replace damaged parts immediately.
17. Do not uninstall or service this mixer until you have followed your “Control of Hazardous Energy Sources” procedure as per OSHA Guidelines and/or the Canadian Occupational Health and Safety Regulations.



FIRE AND EXPLOSION HAZARD

Improper grounding, poor ventilation, open flames, or sparks can cause a hazardous condition and result in a fire or explosion and serious injury.

Receiving, Inspection & Storage

Please Read These Warnings Carefully Before Unpacking the Mixer



The following safety instructions must be COMPLETELY REVIEWED AND FOLLOWED before operating any Dynamix Mixer. FAILURE TO FOLLOW THESE INSTRUCTIONS COULD RESULT IN SERIOUS INJURY

Goods must be inspected with 30 days of receive date. It is assumed that goods are satisfactory if Dynamix is not notified within this period.

Your mixer has been tested and checked for shaft straightness before shipping. Care must be taken while handling the shaft to ensure proper operation.

Please follow the following steps to prevent injury or damage to equipment:

1. Immediately upon delivery, check all crating and boxes for damage which may have occurred during transit, and report any damage to the carrier and Dynamix Agitators Inc.
2. Carefully inventory all furnished equipment against packing list to determine if any shortages exist in delivered material. Any such shortages must immediately be reported to Dynamix Agitators and the Carrier if a timely claim is to be made.
3. The Dynamix Factory has tested and checked this mixer for operation and shaft straightness before shipping. Care must be taken when handling this mixer to ensure proper operation and longevity.
4. Store the mixer in a clean, dry environment, with a relatively constant temperature. Electric motors are easily damaged by moisture. Circulating air will help prevent moisture buildup in the mixer.
5. Store the mixer assembly off the floor, covered by plastic.
6. Do not seal the plastic covering as this will increase the chance of condensation. Use desiccants if possible.



MOVING PARTS HAZARD

Always shut off the mixer power source (unplug electric power and disconnect air power source) before performing any maintenance, repair, or adjustments. Not doing so can result in serious injury.

Operation Instructions

Please Read These Warnings Carefully Before Operating the Mixer

WARNING!

The following safety instructions must be COMPLETELY REVIEWED AND FOLLOWED before operating any Dynamix Mixer. FAILURE TO FOLLOW THESE INSTRUCTIONS COULD RESULT IN SERIOUS INJURY

Important: This instruction manual is not intended to include a comprehensive listing of all details for all procedures required for installation, operation and maintenance. If you have a question about a procedure or are uncertain about any detail, **Do Not Proceed**. Please contact Dynamix Agitators for more information or clarification.

1. Do not uninstall or service this mixer until you have followed your “Control of Hazardous Energy Sources” procedure as per OSHA Guidelines and/or the Canadian Occupational Health and Safety Regulations.
2. Read and fully understand the manual before installation and start-up.
3. Ensure the mixer is designed for the application. Operating outside of the mixer's intended use will result in damage. Refer to original quotation to ensure proper application.
4. Do not handle the mixer by the shaft. Lifting and handling the mixer by the shaft will cause damage.
5. Check the straightness of the shaft by slowly rotating by hand before operation in fluid.
6. On start-up jog the mixer in order to ensure the mixer shaft and impeller is not obstructed from rotation.
7. Fluid level should be one diameter above the impeller for proper mixing unless approved by Dynamix Engineering
8. Avoid drawing fluid level down past last impeller. Impeller should not operate out of fluid unless specifically designed for this.
9. Avoid extended operation when fluid level is at or near the bottom impeller
10. Do not start mixer in settled solids. Impeller cannot be buried in solids at start-up. For best performance axial flow impellers (Dynaflow™ and Pitch) should be positioned at least ½ of their diameter above the tank floor or settled solids.
11. If the impeller is buried, disperse any settled solids before starting the mixer. This may be done using an air hose, re-circulating pump, or a large stick.
12. Reversed rotation may cause overloading and inefficient mixing. Confirm rotation with sticker on side of mixer.
13. Vortexing may occur if the fluid level is too close to the impeller. Aeration of the product and excess vibration may occur.
14. When mixing materials of different viscosities or specific gravities, the lighter or less viscous material should be introduced first. Add heavier materials gradually in the center of the tank while the mixer is running. **Do not dump large quantities of solids or powders into the tank.** This will cause impacting on the impeller and may cause equipment damage.
15. Check the quotation data sheet for operating speed requirements if a variable speed drive is used
16. Some shaft vibration is normal. A bent shaft may cause excess vibration.
17. Keep motors clean and dry. Air motor intakes and exhaust ports must be clear of foreign material. The electric motors supplied are designed for outdoor use, but may be damaged due to harsh weather. A rain cover may be added to extend motor life.
18. Do not run air motors above 2000 RPM. **See Page 16** for proper air consumption and pressure charts. See the **Technical Drawing** for the motor size.

Start-up Checklist

Please Review This Checklist Carefully Before Operating the Mixer

Prior to, and during start-up, please check that the following things have been done:

1. **Manual has been read and followed** ☐
2. Drive coupling is fully engaged ☐
3. Sufficient protection for motor (*if outdoors*) ☐
4. Wiring correctly installed, grounded, and insulated ☐
5. Impeller(s) installed correctly. See Installation section of Manual. ☐
6. Impellers spaced correctly (*if two or more*) for maximum and minimum liquid levels ☐
7. Impeller immersed in liquid and no equipment or obstructions can impact the impeller ☐
8. Proper shaft rotation (*counter-clockwise looking down, unless otherwise noted*) Refer to Directional Sticker on Impellers to show proper impeller assembly and rotation



☐

9. Correct voltage / amperage upon starting ☐
10. Check against motor nameplate data: Record: _____ Volts _____Amps
11. Excessive noise after start-up? Record: _____ db @ 3ft ☐
12. Excessive vibration of tank or support ☐

_____ _____

Inspector Date

Assembly & Installation

Clamp Mount

Installing the Mixer Shaft and Impellers

1. The mixer shaft has one end which is machined to fit the drive coupling. This is the motor end. Slide the impeller(s) onto the other end of the shaft; ensure the impeller is mounted according to the sticker and rotation indicated on the sticker.
2. A single impeller must be mounted at the end of the shaft. This impeller position will be set by the factory but should be no lower than ½ the diameter from the tank floor for axial flow impellers.
3. For dual impellers the upper impeller is usually mounted at least one impeller diameter from lower impeller.
4. Tighten the setscrews securely. Higher power mixers will have impressions in the shaft to seat the setscrews.
5. Remove the service port cover [3] from the bearing spool housing. Rotate the coupling until the clamping bolts [2] are accessible. Install the mixer shaft through the lip seal [5] into the coupling [8]. Use no oil to assist assembly, as slippage may occur in use.
6. Tighten the two clamping bolts [2] using the 3/16" hex key supplied. These bolts must be tightened firmly to secure as loose bolts may result in slippage and power loss.
7. Tighten the two bearing set screws [4] using the 1/8" hex key provided.
8. Re-install service port cover.

Mounting

1. Set the mixer drive on the edge of the tank. Tighten the c-clamp screw [10] to secure the mixer.
2. Ensure both vertical and horizontal mounting surface are in even contact with the tank.

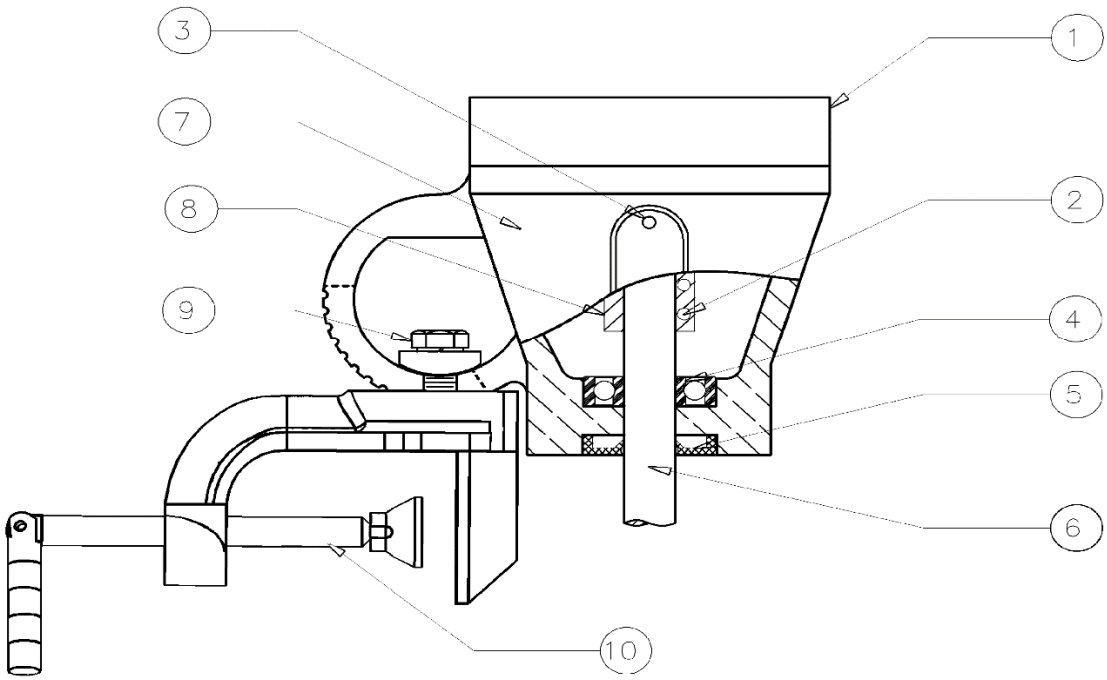

Figure 1

Mixer Positioning

1. Dynamix “Clamp Mount“ mixers are designed to be angled @ 10 to 15 ° (Fig. 2) to the vertical wall and @ 15 to 30° (Fig 3) from the tank center, as shown. The following illustrations are for reference only. If there are any questions regarding the proper positioning of your mixer, please contact your Dynamix representative.
2. To adjust position of mixer, loosen the hex head bolt item 9 (Fig.1) in the clamp, position and tighten.
3. Rotate the mixer shaft by hand to ensure the impeller will clear any obstructions in the tank.
4. The c-clamp and cup plate mounting design allows for 360° rotation and 90° shaft angle adjustment.

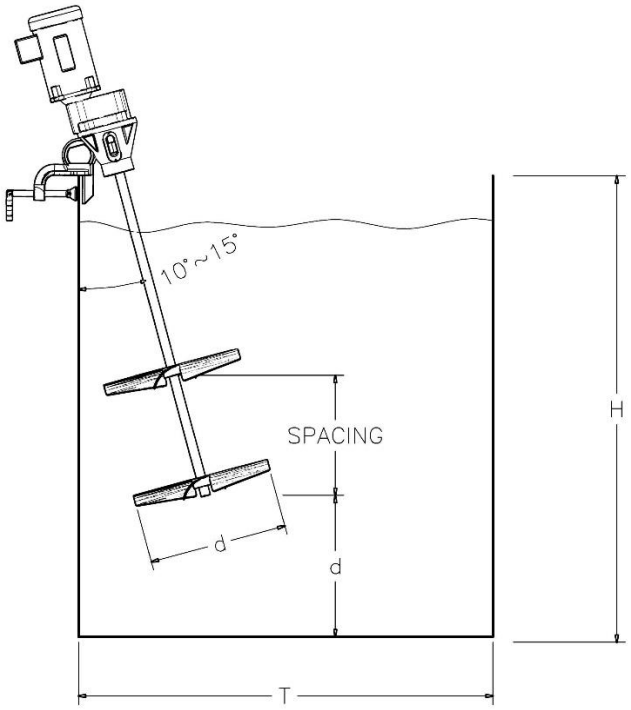

Figure 2

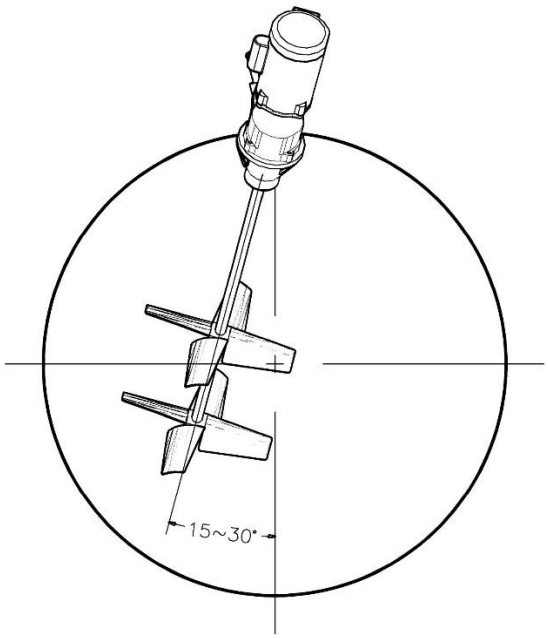

Figure 3

Plate Mount

Installing the Mixer Shaft

1. The mixer shaft has one end which is machined to fit the drive coupling. This is the motor end. Slide the impeller(s) onto the other end of the shaft; ensure the impeller is mounted according to the sticker and rotation indicated on the sticker.
2. A single impeller must be mounted at the end of the shaft. This impeller position will be set by the factory but should be no lower than ½ the diameter from the tank floor for axial flow impellers. For dual impellers the upper impeller is usually mounted at least one impeller diameter from lower impeller. Tighten the setscrews securely. Higher power mixers will have impressions in the shaft to seat the setscrews.
3. Remove the service port cover [3] from the bearing spool housing. Rotate the coupling until the clamping bolts [2] are accessible. Install the mixer shaft through the lip seal [5] and bearing [4] into the coupling [8]. Use no oil to assist assembly, as slippage may occur in use.
4. Tighten the two clamping bolts using the 3/16" hex key supplied. These bolts must be secure, as loose bolts may result in slippage and power loss.
5. Tighten the two bearing set screws [4] using the 1/8" hex key provided.
6. Re-install service port cover.

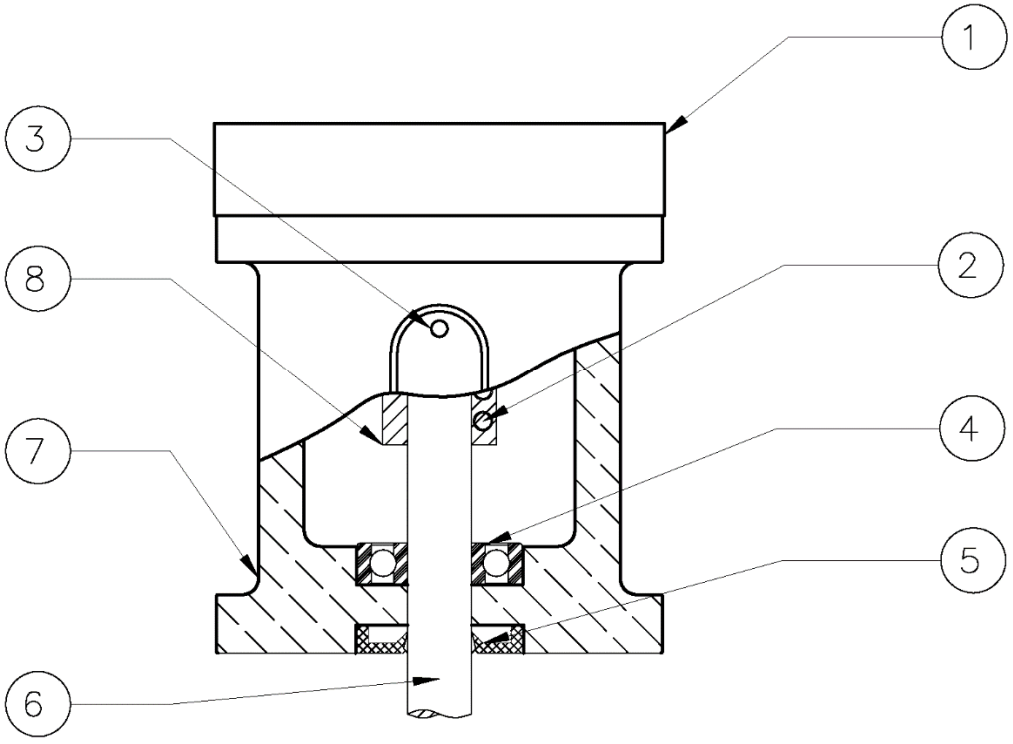

Figure 4

Mixer Mounting

1. The mounting structure must be stable and secure. If the mixer is not mounted to a stable platform, damage to the tank or mixer may occur, as well as harm to personnel.
2. The mixer is supplied with rubber vibration mounts, which absorb the vibrations of the shaft. This will help reduce the stresses in longer shafts.
3. Both the angle mounted and flat plate mounted mixers use four (4) 3/8” bolts. Lock washers or double nuts are recommended to prevent loosening during operation.
4. Mixer mounts are selected according to application requirements. Refer to quotation for intended mixer mounting.

Centre Mounted Mixer for Tank with Baffles

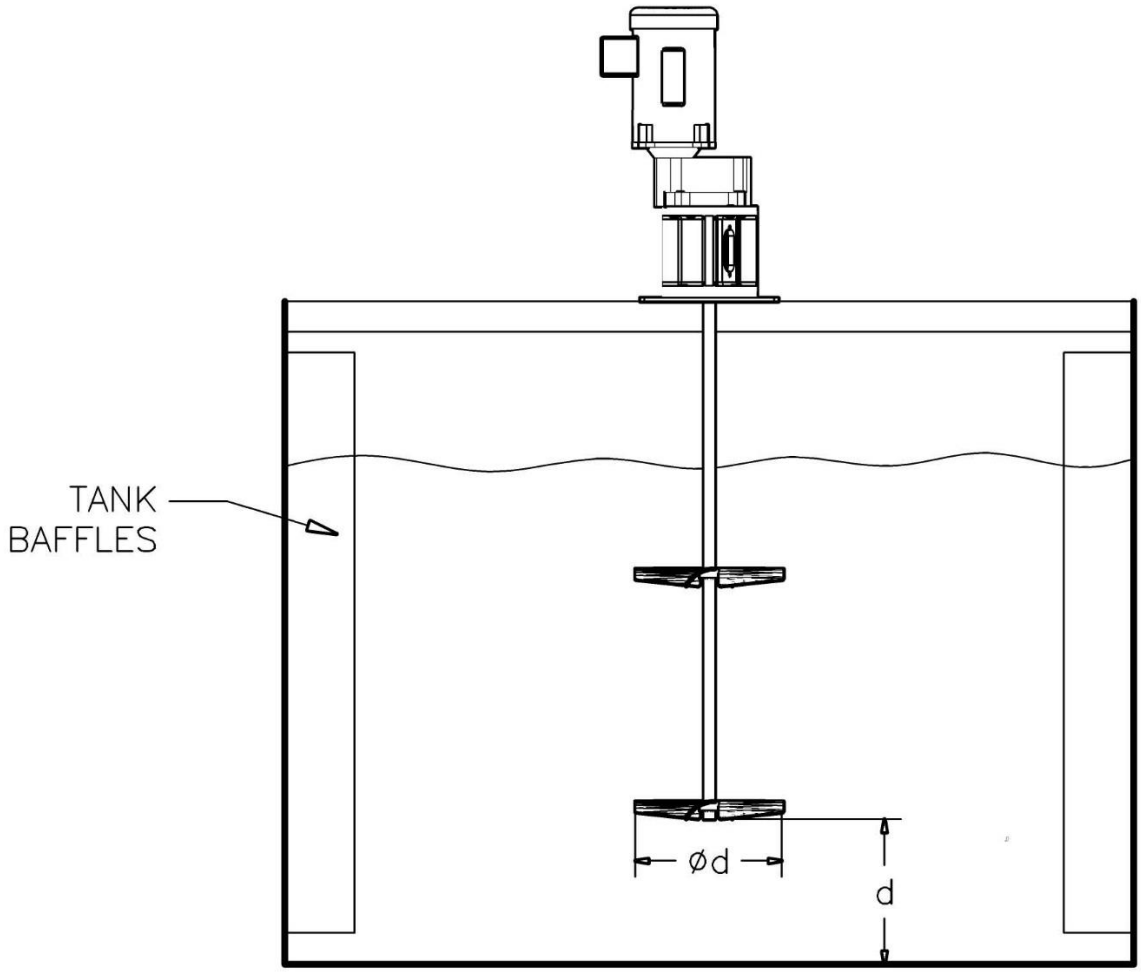

Figure 5

Offset Mounting

If your mixer has been approved and designed for “Offset Mounting” you can use the following instructions.

If it is not approved for offset mixing, then do not use this as it will damage the mixer. Contact Dynamix to confirm if needed.

Offset mounting should be 1/5th to 1/6th of tank diameter.

Angle Mounted Mixer

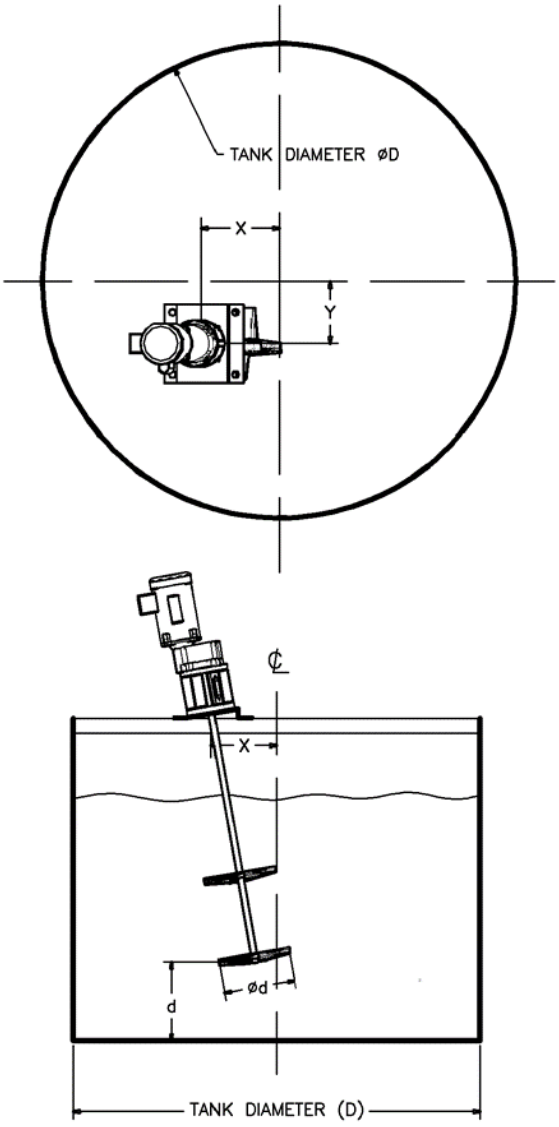

	ANGLE MOUNT OFFSET
X	D/3.5
Y	D/6

Figure 6

Offset Mounted Mixer

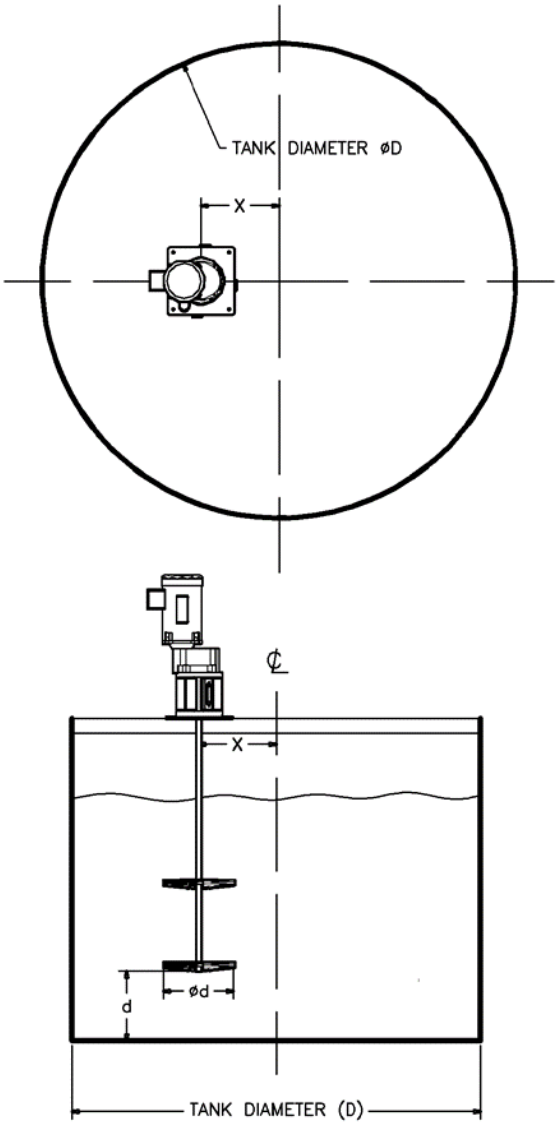

	PLATE MOUNT OFFSET
X	D/6

Figure 7

Parts, Maintenance & Service

Clamp Mount

This drawing is not exact.

It is only a typical representation of the DMX Series models. When noted, please contact your Dynamix representative with your mixer serial number. Note; the DMX Series is a highly configurable mixer and few parts are standard.

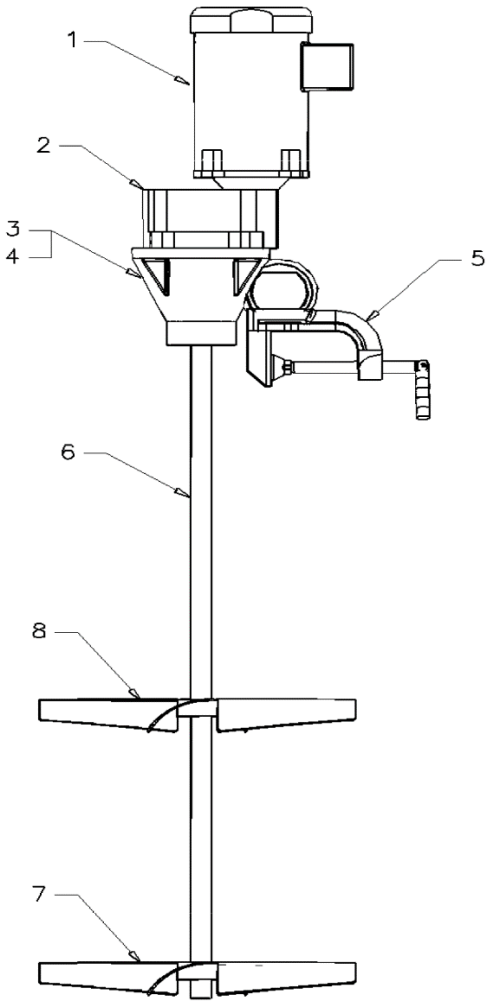

REF #	PART NAME	PART No.
1	MOTOR	Refer to mixer serial no. or sales person to confirm specs.
2	GEAR BOX	Refer to mixer serial no. or sales person to confirm specs.
3	NOSE CONE BODY	Refer to mixer serial no. or sales person to confirm specs.
4	SHAFT COUPLING	Refer to mixer serial no. or sales person to confirm specs.
5	C-CLAMP BODY	Refer to mixer serial no. or sales person to confirm specs.
6	SHAFT ASSEMBLY	Refer to mixer serial no. or sales person to confirm specs.
7	BOTTOM IMPELLER	Refer to mixer serial no. or sales person to confirm specs.
8	TOP / MIDDLE IMPELLER	Refer to mixer serial no. or sales person to confirm specs.

All equipment design and application data shown herin and related info is confidential and the property of Dynamix Agitators Inc. ***No use or disclosure therof may be made without written permission from Dynamix Agitators Inc.***

Plate Mount or Flange

This drawing is not exact.

It is only a typical representation of the DMX Series models. When noted, please contact your Dynamix representative with your mixer serial number. Note; the DMX Series is a highly configurable mixer and few parts are standard.

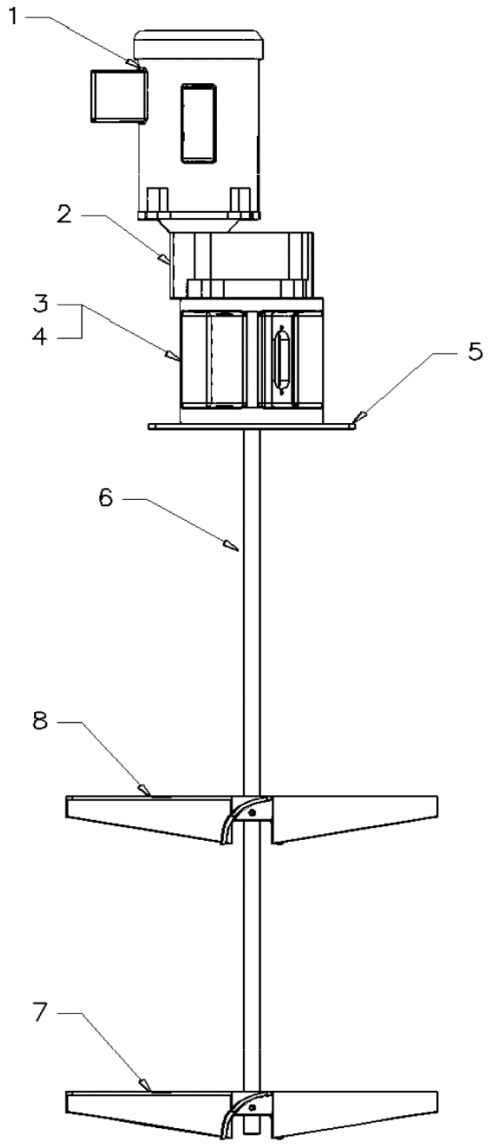

REF #	PART NAME	PART No.
1	MOTOR	Refer to mixer serial no. or sales person to confirm specs.
2	GEAR BOX	Refer to mixer serial no. or sales person to confirm specs.
3	PEDESTAL BODY	Refer to mixer serial no. or sales person to confirm specs.
4	SHAFT COUPLING	Refer to mixer serial no. or sales person to confirm specs.
5	BASE PLATE	Refer to mixer serial no. or sales person to confirm specs.
6	SHAFT ASSEMBLY	Refer to mixer serial no. or sales person to confirm specs.
7	BOTTOM IMPELLER	Refer to mixer serial no. or sales person to confirm specs.
8	TOP / MIDDLE IMPELLER	Refer to mixer serial no. or sales person to confirm specs.

All equipment design and application data shown herin and related info is confidential and the property of Dynamix Agitators Inc. ***No use or disclosure therof may be made without written permission from Dynamix Agitators Inc.***

General Information Regarding Electric Motors

Overview

For your protection, do not install, operate or attempt to perform maintenance procedures until you understand the Warning and Caution statements. A Warning statement indicates a possible unsafe condition that can cause harm to personnel. A Caution statement indicates a condition that can cause damage to equipment.

Before you operate or perform maintenance, become familiar with the following:

1. NEMA Publication MG-2, Safety Standard for Construction and Use of Electric Motors
2. The National Electrical Code
3. Local codes and Practices
4. “Control of Hazardous Energy Sources” procedure as per OSHA Guidelines, and the Canadian Occupational Health and Safety Regulations

Motor Enclosures

TEFC, totally enclosed motors are intended for use where moisture, dirt and/or corrosive materials are present in indoor and outdoor locations.

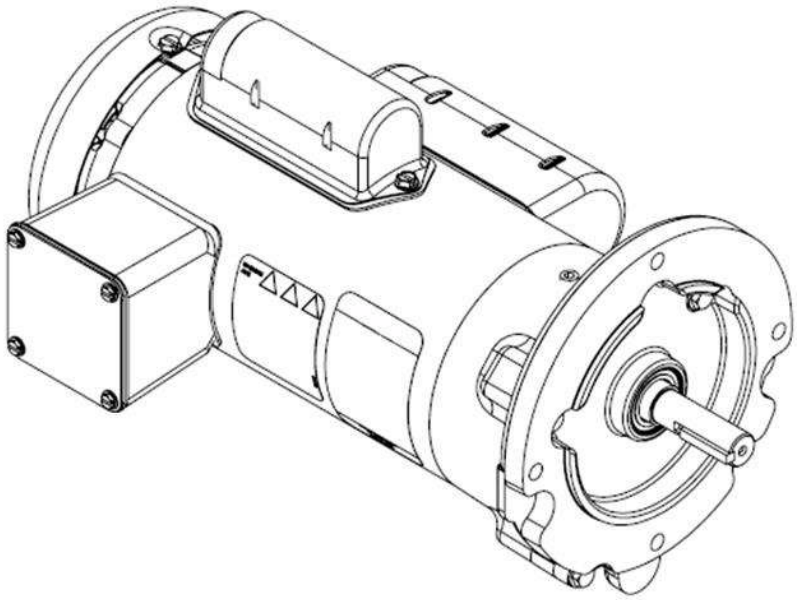

Safety Notice

This equipment contains **high voltage. Electrical shock can cause serious or fatal injury.** Only qualified personnel should attempt installation, operation and maintenance of electrical equipment. Be sure that you are completely familiar with NEMA publication MG-2, safety standards for construction and guide for selection, installation and use of electric motors and the National Electrical Code and local codes and practices. Unsafe installation or use can cause conditions that lead to serious or fatal injury.

Only qualified personnel should attempt the installation, operation and maintenance of this equipment.



WARNING!

- Do not touch electrical connections before you first ensure that power has been disconnected. Electrical shock can cause serious or fatal injury. Only qualified personnel should attempt the installation, operation and maintenance of this equipment.
- Be sure the system is properly grounded before applying power. Do not apply AC power before you ensure that all grounding instructions have been followed. Electrical shock can cause serious or fatal injury. National Electrical Code and Local codes must be carefully followed.
- Use proper care and procedures that are safe during handling, lifting, installing, operating, and maintaining operations. Improper methods may cause muscle strain or other harm.
- Disconnect all electrical power from the motor windings and accessory devices before disassembly of the motor. Electrical shock can cause serious or fatal injury.
- Do not use these motors in the presence of flammable or combustible vapors or dust. These motors are not designed for atmospheric conditions that require explosion proof operation.
- Motors that are to be used in flammable and/or explosive atmospheres must display the on the nameplate the UL label showing the correct classification for the area it is operated in. Specific service conditions for these motors are defined in NEC 70-599.
- To prevent equipment damage, be sure that the electrical service is not capable of delivering more than the maximum motor rated amps listed on the rating plate.

Motor Connections

1. **Wiring:** Match the motor starter and overload protection to the motor rating. Follow the control manufacturer's instructions.
2. All electrical connections must conform to National Electrical Code and all local regulations. Match line voltage and wire capacity to motor rating found on the motor nameplate.
3. Single-phase electric motors may be pre-wired with a six (6) foot electrical cord. If not provided, follow the wiring diagram on the motor for proper connections. Ensure the switch is in the OFF position before connecting to a power supply. Switch the connections to achieve proper rotation.
4. Three phase electric motors must be wired according to the diagram on the motor.
5. Variable speed DC motors using an SCR controller must be wired following the controller instructions. Before applying power, read the instructions carefully, and make the required adjustments.
6. Mixer standard rotation direction is counter-clockwise facing lead end.

General Information Regarding Air Motors

Air motors operate best with lubricated, dry, clean air at air pressures below 100psi.

Air Lubricator: Lubricated air is typically available from the air system. If not, an automatic lubricator must be installed in the air- line ahead of the air motor. Use a pneumatic air lubricant e.g. ISO VG32 or detergent SAE #10 automotive oil. Lubricator should be adjusted to feed one drop of oil for every 50 to 75cfm.

Moisture: Excessive moisture in the air-line can cause rust formation in the motor and ice to form in the muffler. An in-line separator must be used on your pneumatic system to reduce this.

Air Filter: If the air is dirty this will cause the motor to run sluggishly and can break the motor vanes. An in-line filter must be used on your pneumatic system to reduce this.

Pressure Regulator: Air motors are designed to operate with a maximum air pressure of 100 psi. If higher air pressure is supplied, an in-line air pressure regulator should be used to reduce the pressure. This can also be used to vary the speed of the air motor

Flushing: Should excessive dirt, foreign particles, moisture, or excess oil be permitted to enter the air motor, the unit will act sluggish. Flushing the air motor should remove this.

WARNING!

- Use only non-combustible solvents.
- Do not use kerosene or other flammable solvents to flush the air motor.
- Flushing with Flammable solvents could cause fire or explosion and result in serious injury or property damage.
- Using **GAST Flushing Solvent AH255D** will reduce this concern.
- **Wear eye protection** and flush in a well-ventilated area.

1. Disconnect air line and muffler
2. Pour several tablespoons of solvent directly into intake port
3. Rotate shaft by hand in both directions for 3 to 4 minutes
4. Reconnect air line and slowly apply pressure until there is no trace of solvent in the exhaust air
5. Re-lubricate motor with a squirt of oil in chamber

Air Motor Horsepower Rating & Air Consumption

For Air Motors Rated at 1.5HP

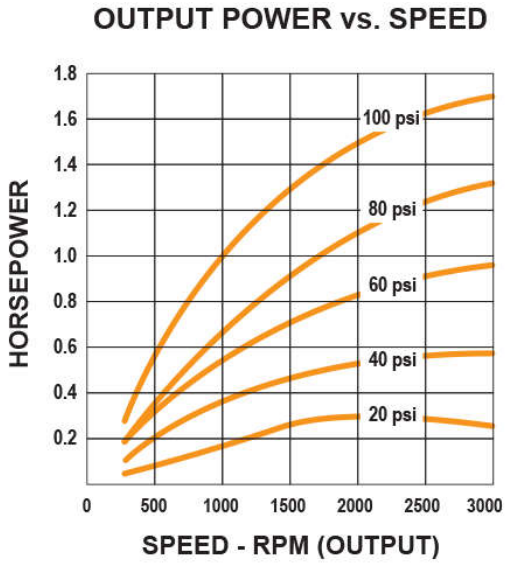

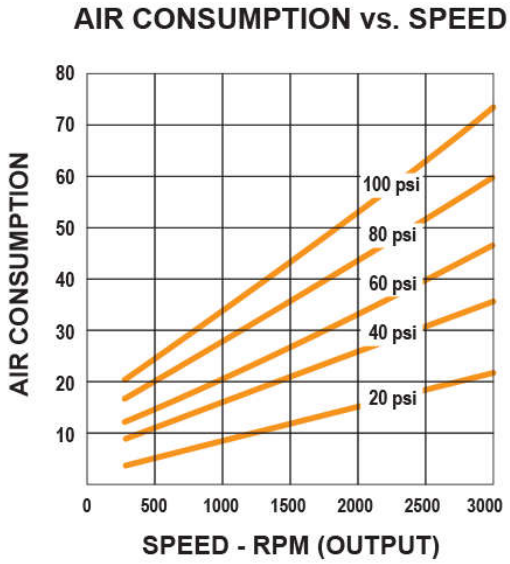

For Air Motors Rated at 4HP

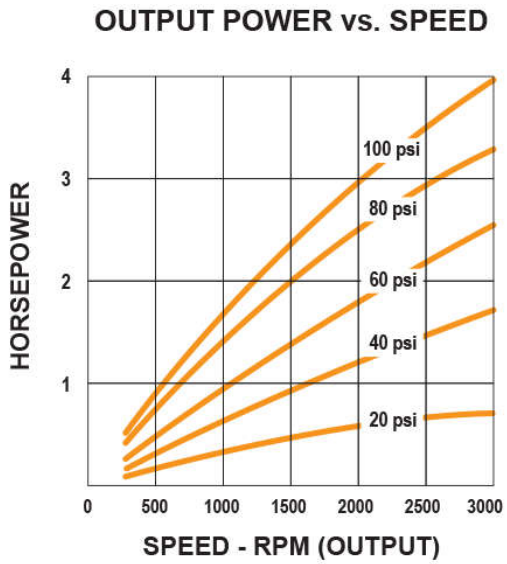

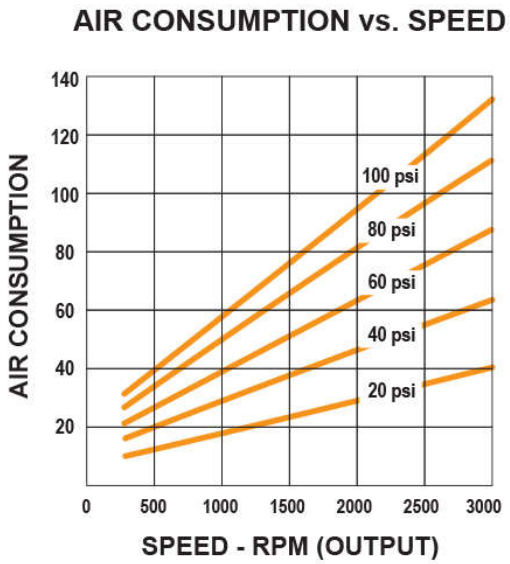

Note: Output rpm refers to motor output shaft only. For gear reduced drives refer to gear ratio on quotation.

Lubrication

Air Motor Connection

Air Motors must always have a filter, lubricator and moisture trap installed on the air supply line. Supply pipe should be one size larger than the intake port on the motor. A regulator may be installed to control motor speed. Install the airline on the correct port on reversible motors for proper rotation direction.

Air Motor

Air Motor lubricator should be adjusted to feed one drop of oil every 50-75 CFM.

Use SAE #10automotive detergent engine oil.

Gear Driven

Gear drivers for mixers are lubricated at the factory using the proper type and amount of lubricant for normal service, and are maintenance free. For additional information contact Dynamix Agitators.

Mixer Shaft Bearings

Mixer Shaft Bearings are pre-lubed and sealed and do not require re-lubrication.

Troubleshooting Guide

Use This Chart to Diagnose Operation Issues

Problem	Possible Cause	Possible Solution
Mixer Will Not Start	• Loose connections • Incorrect wiring • Blown fuse • Wrong size heaters in starter • Mechanical jamming • Water damage to motor	• Check and tighten connection • Check wiring diagram and wire correctly • Replace fuse • Replace heaters • Free all debris for rotation • Service or replace motor
Motor Runs Hot	• Restricted ventilation • Amperage overload • Low or high voltage • Unbalanced voltage between phases • Frequent starting and stopping • Product too viscous • Impeller(s) upside down • Incorrect rotation	• Clear the vents • **CONSULT FACTORY** • Wire for correct voltage • Consult electrician • Check with factory – a special motor may be required • Check viscosity and specific gravity of product (consult factory) • Reinstall in correct position • Change motor leads per nameplate instructions
Mixer Will Not Reach Correct Speed	• Overload of motor • Loose drive coupling bolts • *Also See: "Mixer Will Not Start"*	• Check amperage against nameplate data • Check coupling bolt tension (coupling and/or shaft may be damaged if mixer has been run with slipping coupling)
Shaft Will Not Fit Into Drive	• Shaft over size (proper diameter: 0.001" – 0.002" under normal diameter) • Wrong end of shaft (only one end fits) • (2) Coupling bolts are too tight • Wrong size shaft, coupling or bearing • Damaged shaft, coupling or bearing	• Measure and consult factory • Install end marked motor end • Loosen bolts • **CONSULT FACTORY** • **CONSULT FACTORY**
Shaft Vibration	• Unstable mounting platform • Bent mixer shaft • Bent or uneven impeller blades • Impeller not immersed in liquid • Impeller too close to surface • Worn or damaged drive bearings	• Reinforce platform • **CONSULT FACTORY** • **CONSULT FACTORY** • Fill tank • Fill tank and lower impeller (see S3) • Replace damaged parts
Noisy Operation	• Foreign material in lubricant • Dry lip seal in spool • Insufficient lubricant • Incorrect lubricant • Loose drive coupling bolts • Worn or faulty bearings/gears	• Change lubricant • Apply lubricant to lip seal • Fill proper amount of lubricant • Change to correct lubricant • Check and tighten coupling bolts • Check bearings/gears – replace if necessary
Oil Leakage	• Damaged broken gasket • Excessive lubricant • Seals worn or damaged • Loose bolts around side plates	• Replace gasket • Check manual for proper amount of lubricant and drain excess • Replace seals • Check and tighten bolts
Bearing Failure	• Water damage • High temperature product • *Also See: "Noisy Operation"*	• Replace bearings (check all other parts) • Provide heat shield • **CONSULT FACTORY**

Terms & Conditions

These Delivered Terms and Conditions (the "Delivered Terms") apply to the purchase of Dynamix Agitators Inc. ("**Dynamix**", "**We**" or "**Our**") products ("**Products**") by a customer (the "**Customer**"). Unless otherwise indicated, these terms and conditions will apply to all purchases of Products from Dynamix.

PURCHASE TERMS

The Customer's purchase of Products is governed by: (1) the quotation sent to the Customer for the Products, which sets out the Customer's name and address, the Products covered, price and payment terms (the "**Quotation**"); (2) the terms and conditions attached to the Quotation; (3) these Delivered Terms; and (4) any additional terms referenced in the Quotation (collectively, the "**Agreement**").

CONFIDENTIAL INFORMATION

The Product pricing, terms and conditions of sale, the Quotation, and other information contained in or disclosed by Dynamix pursuant to the Agreement is confidential. Customer may not disclose such pricing, terms and conditions, Quotation and other information to any other party without Dynamix's prior written approval, except for any legally required disclosures. Dynamix reserves the right to enforce these confidentiality restrictions against any party who wrongfully discloses, receives or further disseminates Dynamix's confidential information.

LIMITATION OF REMEDIES

Customer's remedy for breach of any of the foregoing warranties shall be limited to those set forth in the **Warranty Section** provided below, however, that We will not be responsible for removal, loading, installation, freight or similar related expenses in connection with any modification, replacement or repair. The determination of which remedy shall be applicable, shall be determined by Dynamix, in its sole discretion.

DYNAMIX AND ITS AFFILIATES AND REPRESENTATIVES HAVE NO LIABILITY TO CUSTOMER FOR ANY DIRECT, INDIRECT, SPECIAL, PUNITIVE, INCIDENTAL OR CONSEQUENTIAL DAMAGES OR DELAY WHATSOEVER, INCLUDING, BUT NOT LIMITED TO, DAMAGES FOR LOST OR INTERRUPTED BUSINESS, LOSS OF USE, LOST PROFITS OR LOST REVENUES, HOWEVER CAUSED AND UNDER ANY THEORY OF LIABILITY (INCLUDING, BUT NOT LIMITED TO, CONTRACT, TORT, WARRANTY OR NEGLIGENCE), EVEN IF WE HAVE BEEN ADVISED OF THE POSSIBILITY OF SUCH DAMAGES. THE TOTAL LIABILITY OF DYNAMIX AND ITS AFFILIATES AND REPRESENTATIVES TO CUSTOMER AND CUSTOMER'S EXCLUSIVE REMEDY FOR ANY AND ALL CLAIMS ARISING OUT OF OR RELATING TO THIS CONTRACT, INCLUDING, BUT NOT LIMITED TO, THE PRODUCTS PROVIDED HEREUNDER, IS LIMITED TO THE PURCHASE PRICE OF THE PRODUCT THAT IS THE BASIS FOR THE CLAIM.

Customer will be barred from any remedy unless Customer gives Dynamix prompt written notice of the problem. Further, any returns of Products for modification, repair or replacement must be authorized by Dynamix in writing prior to return of the Products by the Customer.

Dynamix will not be responsible for any repairs performed by third parties unless the extent, or terms and costs of such repairs, are authorized by Dynamix, in writing in advance.

PATENTS

Dynamix represents and warrants that, to its knowledge, the Products do not infringe upon any patents granted to others. We do not assume any responsibility or liability for any claim of infringement brought against the Customer, its successors, assigns, customers or users of the Products.

UNAUTHORIZED MODIFICATIONS

Modifications to the Products ordered by Customer, or any of their components, could significantly affect their performance or conformance to Dynamix's features. Any modification of the Products, or any of their components, other than as performed or authorized in writing by Dynamix, is prohibited and will invalidate and terminate Dynamix's warranty for the Products, effective on the date of any such modification.

LEGAL FEES

If a suit or action is brought by any party under this Contract to enforce or interpret any of its terms or in any appeal therefrom, it is agreed that the prevailing party shall be entitled to reasonable legal fees to be fixed by the trial court and/or appellate court. Customer shall be responsible for any and all costs of collection incurred by Dynamix in connection herewith, including legal fees and costs.

JURISDICTION / VENUE

These Delivered Terms will be governed by and construed in accordance with the laws in force in the Province of British Columbia and the federal laws of Canada, as applicable therein, without regard to its conflict of laws principles. The Parties agree to attorn to the exclusive jurisdiction of the courts of British Columbia.

GENERAL MATTERS

Any assignment of these Delivered Terms will be void without the other party's prior written consent, which will not be unreasonably withheld. Dynamix may hire subcontractors or use its affiliates to perform the obligations under this Agreement. If any part of these Delivered Terms are found invalid, the remaining part will be effective. No waiver, alteration or modification of any of the provisions of these Delivered Terms will be binding on Dynamix, unless made in writing and signed by a duly authorized officer of Dynamix. These Delivered Terms, the Quotation and its attached terms and conditions, and any other terms referenced in the Quotation contain the entire agreement of the parties.

Warranty

Dynamix warrants to the Customer that the Product will perform substantially in accordance with the features and Solution Assurance as set out in the Quotation and be free from defects in materials and workmanship under normal use.

We warrant that we will modify, repair or replace the Product provided to the Customer, at Our sole discretion and at no charge, Ex Works (Incoterms 2000) Dynamix plant, if the Product is defective in materials or workmanship under normal use.

WE DO NOT GUARANTEE THE PRODUCTS AGAINST CHEMICAL OR ABRASIVE ATTACK OR OTHER DETERIORATION DUE TO EXPOSURE.

THE FOREGOING WARRANTIES EXTEND ONLY FOR 12 MONTHS AFTER FIRST INSTALLATION OF THE PRODUCT AT CUSTOMER'S FACILITY OR FOR 18 MONTHS AFTER ITS SHIPMENT FROM DYNAMIX'S PLANT, WHICHEVER PERIOD IS SHORTER, OR AS OTHERWISE STATED IN WRITING BY DYNAMIX.

EXCEPT AS EXPRESSLY PROVIDED IN THE AGREEMENT, WE EXPRESSLY DISCLAIM AND MAKE NO EXPRESS OR IMPLIED REPRESENTATIONS, CONDITIONS, GUARANTEES OR WARRANTIES OF ANY KIND, ORAL OR WRITTEN, INCLUDING, BUT NOT LIMITED TO, IMPLIED WARRANTIES OF MERCHANTABILITY, FITNESS FOR A PARTICULAR PURPOSE, NON-INFRINGEMENT, INTER-OPERABILITY OF PRODUCTS, USAGE, CUSTOM OR TRADE, AND OF ALL OTHER OBLIGATIONS OR LIABILITIES ON THE PART OF DYNAMIX. THE ABOVE WARRANTIES SHALL NOT APPLY TO FAILURES RESULTING FROM (A) NORMAL WEAR AND TEAR, (B) ACCIDENT, NEGLIGENCE, ALTERATION, ABUSE, MISUSE OR USE INCONSISTENT WITH ANY INSTRUCTIONS PROVIDED AS TO STORAGE, HANDLING, MAINTENANCE, LUBRICATION, INSTALLATION, STARTUP, OPERATION AND SAFETY, (C) IMPROPER INSTALLATION AND/OR (D) INACCURATE AND/OR INCOMPLETE SPECIFICATIONS, DESIGN CONDITIONS OR OTHER DATA FURNISHED BY OR ON BEHALF OF CUSTOMER. WE MAKE NO WARRANTY WHATSOEVER WITH RESPECT TO ACCESSORIES OR PARTS NOT SUPPLIED BY DYNAMIX.

Warranty & Claims Policy

The following statement of our Warranty and Claims Policy is intended to assist our customers in understanding the terms of our warranty, the circumstances under which we will honor claims, and the procedure for making claims.

Our Warranty and Claims Policy should be read in conjunction with and is subject in as respect to the Terms and Conditions of Sale which appear on our quotation and acknowledgment forms and the specific terms of any distributorship or other such agreement between us and the individual customer.

1. **Warranty Manufactured Products**

   We warrant Products manufactured by us to be free from defects in material and workmanship for a period of twelve (12) months after first installation of mixer or for eighteen (18) months after shipment from our factory, whichever occurs first.

   Our liability under this warranty or in connection with any other claim relating to our Products is limited to the repair, or at our option, the replacement or refund of the purchase price, of any Products or parts or components which are returned to us freight prepaid and which are defective in material or workmanship. Products or parts or components thereof, which are repaired or replaced by us will be returned to our customer freight collect.

2. **Limitation of Liability**

   The only warranty that we offer our customers is that warranty which is set forth on our quotation and acknowledgment forms and which is summarized above.

   WE DO NOT MAKE ANY OTHER EXPRESS WARRANTIES OR ANY IMPLIED WARRANTIES, INCLUDING ANY IMPLIED WARRANTY OF MERCHANTABILITY OR OF FITNESS FOR A PARTICULAR PURPOSE OR USE.

   In addition, we do not assume and we expressly disclaim any liability for

   a. any SPECIAL, INDIRECT, INCIDENTAL, OR CONSEQUENTIAL DAMAGES which anyone may suffer as the result of the sale, delivery, servicing, use or loss of use, of any Product, or

   b. any charges or expenses of any nature which are incurred without our express written consent.

   Our total liability under our warranty or in connection with any claim involving any Product is expressly limited to the purchase price of the Product in respect of which damages are unclaimed.

3. **What Is Not Covered By Warranty:** Damages and Claims for Which Dynamix Is Not Responsible

   The Seller's Warranty applies insofar as the unit is operated within the rating and service conditions for which it was specifically sold. The Purchaser must prevent the existence of any destructive external conditions that might typically include vibratory loads, severe shock loading, mechanical or thermal overloads or other conditions that may adversely affect the operation. The gear drive must be installed and maintained in accordance with instructions and provided in this manual.

   The following are examples of the kinds of defect which are not covered by Our warranty; defects which are caused by improper installation, improper or abnormal use or operation, or improper storage or handling; defects caused by our customer's failure to perform normal preventive maintenance; defects caused by repairs by persons not authorized by us; defects caused by modification alterations made by our customer; and any damage to our Product occurring while is in our customer’s possession.

   Since these are examples and not a complete list, we suggest that our customers contact our Customer Service Department if they have any question concerning the scope of our warranty.

   Additional costs incurred by our customers because of delays in delivery are consequential damages for which we are not responsible.

   Risk of loss or damage to our Products passes to our customer when we tender our Products to the carrier. Although we cannot process transit damage claims with any carrier on a customer's behalf, we will provide reasonable assistance to our customers when such claims arise.

4. **Consultations with Customers**

When so requested, our engineers and other personnel may consult with our customers concerning our Products. While our employees will offer their best judgment on any question, the ultimate responsibility for selecting that Product which will perform the functions and applications desired by the customer rests with the customer. As noted above, we make no warranty, express or implied, as to the fitness of any Product for any Product for any particular purpose or use.

5. How to Make a Claim

Within the limits of the terms and conditions set forth on our quotation and acknowledgment forms and in the Warranty and Claims Policy, we will honor reasonable and justified claims when adequate evidence is provided to show that our Product was defective.

Whenever a customer has a claim concerning a Product, the customer should contact the Customer Service Department.

CUSTOMERS SHOULD NOT RETURN ANY PRODUCTS OR PARTS OR COMPONENTS TO US WITHOUT FIRST CONTACTING US.

When contacting us, customers should have the following information available:

a) Customer name, location, purchase order number and date of purchase

b) Factory/Branch order number (serial number)

c) Product/Model number

d) Equipment installation date

e) Equipment failure date

f) Application or service of unit

g) Details of claim

Dynamix will notify the customer whether it will be necessary to return the Product or part or component to us. If so, we will send the customer an "AUTHORIZED RETURN NUMBER" that must be attached to the product or part or component before returning it. All items returned to us must be returned freight prepaid.

If we determine that the Product or part or component is defective and that the defect is covered by our warranty, we will, as explained above, correct the defect or refund the purchase price.

Customers should promptly inspect all Products upon delivery. The Customer must make claims for shortages within 20 days after the date of shipment from our factory or warehouse. We suggest that shortages be noted on the bill of lading or packing list, which should then be sent to our Customer Service Department for verification.

All other claims must be submitted within 60 days after the date of shipment from our factory or warehouse, or in the case of an alleged breach of warranty, within 60 days after the date within the warranty period on which the defect is or should have been discovered. Claims may not be deducted from payments made to us unless we have so agreed in writing in advance.

In the event of malfunction within the warranty period, Dynamix Agitators must be notified promptly, within thirty (30) days, if it is intended that the warranty is to cover the incident.

Warranty Data Sheet

To validate your warranty, please complete this form and return to:

Dynamix Agitators Inc.
#150-14480 River Road
Richmond, BC, Canada
V6V 1L4

Mixer Model Number _____ Serial Number _____

Purchase Order Number _____ Date Received _____

Tank Number or Location _____

Agitator Start Up Data

Date of Installation _____ Voltage at Start Up _____ V

DD/MM/YYYY

Full Load amperage measured with ammeter _____ Agitator shaft speed _____

RPM

Observed Level of Agitation:

- Gentle ☐
- Medium ☐
- Vigorous ☐
- Violent ☐

Inspector: _____

Please print name clearly

Date: _____

DD/MM/YYYY

Description of Process:

_____

_____

_____

Comments:

_____

_____

_____

Notes:

_____

_____

_____

DATA SHEET

Single Phase Induction Motor - Squirrel Cage

Customer	: H2flow Equipment, Inc.
Customer reference	: PO-0713-22

Product line	: Single-Phase	Product code :	14078277
		Catalog # :	FC.50104W01DOE

Frame	: W56C	Locked rotor time	: 36s (cold) 20s (hot)
Output	: 0.5 HP (0.37 kW)	Temperature rise	: 80 K
Poles	: 4	Duty cycle	: Cont.(S1)
Frequency	: 60 Hz	Ambient temperature	: -20°C to +40°C
Rated voltage	: 115/208-230 V	Altitude	: 1000 m.a.s.l.
Rated current	: 5.22/2.90-2.61 A	Protection degree	: IP55
L. R. Amperes	: 38.6/21.5-19.3 A	Cooling method	: IC411 - TEFC
LRC	: 7.4x(Code K)	Mounting	: F-1
No load current	: 2.80/1.21-1.40 A	Rotation[1]	: Both (CW and CCW)
Rated speed	: 1740 rpm	Noise level[2]	: 52.0 dB(A)
Slip	: 3.33 %	Starting method	: Direct On Line
Rated torque	: 1.51 ft.lb	Approx. weight[3]	: 27.3 lb
Locked rotor torque	: 300 %		
Breakdown torque	: 270 %		
Insulation class	: F		
Service factor	: 1.15		
Moment of inertia (J)	: 0.0558 sq.ft.lb		
Design	: N		

Output	50%	75%	100%
Efficiency (%)	68.0	72.0	77.0
Power Factor	0.67	0.71	0.80

Foundation loads	
Max. traction	: 25 lb
Max. compression	: 53 lb

		Drive end	Non drive end
Bearing type	:	6203 ZZ	6202 ZZ
Sealing	:	V'Ring	V'Ring
Lubrication interval	:	-	-
Lubricant amount	:	-	-
Lubricant type	:	Mobil Polyrex EM	

Notes
Dynamix mixer S/N 74727 (Q58506)

This revision replaces and cancel the previous one, which must be eliminated.
(1) Looking the motor from the shaft end.
(2) Measured at 1m and with tolerance of +3dB(A).
(3) Approximate weight subject to changes after manufacturing process.
(4) At 100% of full load.

These are average values based on tests with sinusoidal power supply, subject to the tolerances stipulated in NEMA MG-1.

Rev.	Changes Summary	Performed	Checked	Date

Performed by				
Checked by			Page	Revision
Date	12/07/2022		1 / 2	

This document is exclusive property of WEG S/A. Reprinting is not allowed without written authorization of WEG S/A.
Subject to change without notice

LOAD PERFORMANCE CURVE

Single Phase Induction Motor - Squirrel Cage

Customer	: H2flow Equipment, Inc.
Customer reference	: PO-0713-22

Product line	: Single-Phase	Product code :	14078277
		Catalog # :	FC.50104W01DOE

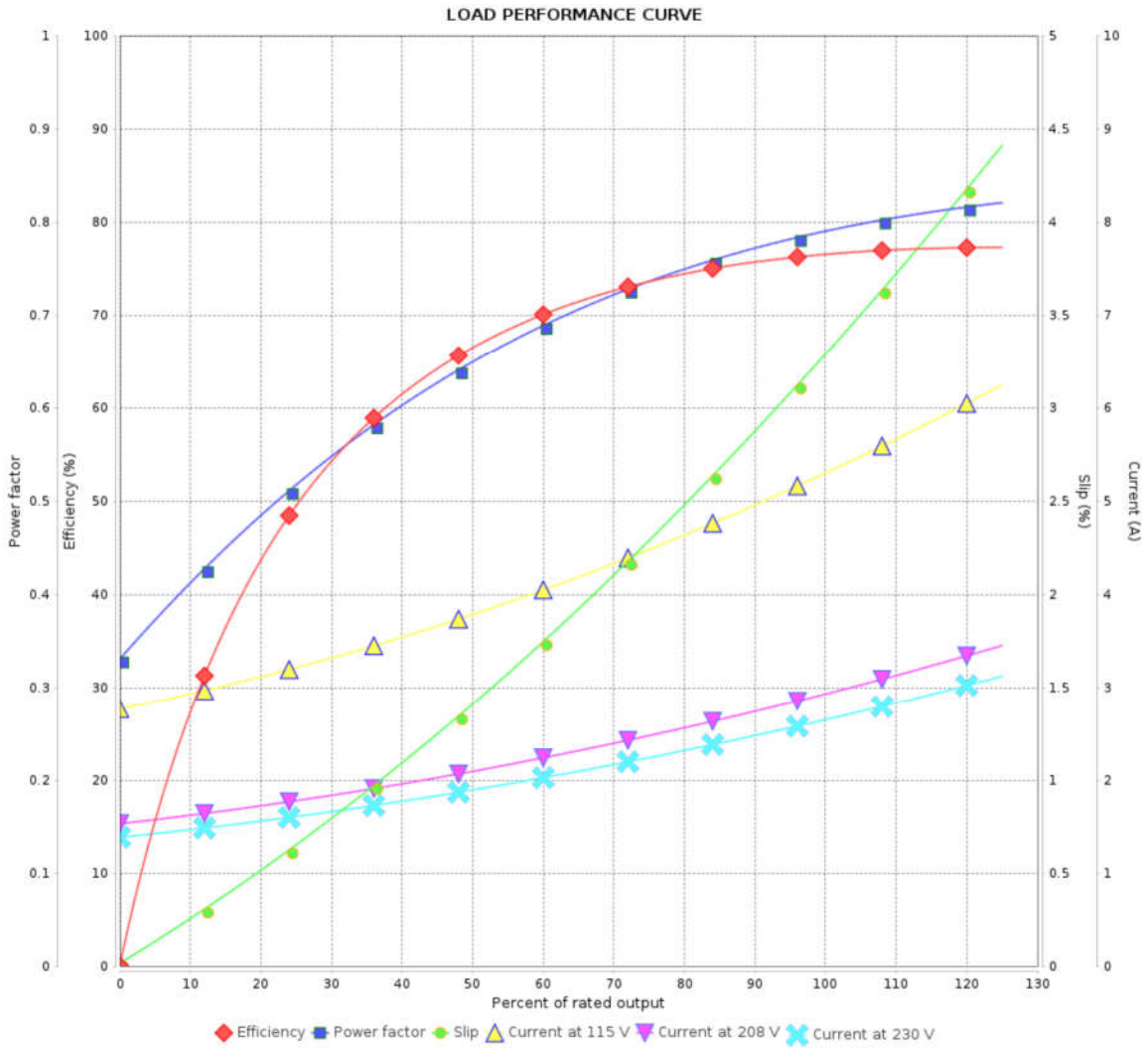

Performance	: 115/208-230 V 60 Hz 4P

Rated current	: 5.22/2.90-2.61 A	Moment of inertia (J)	: 0.0558 sq.ft.lb
LRC	: 7.4	Duty cycle	: Cont.(S1)
Rated torque	: 1.51 ft.lb	Insulation class	: F
Locked rotor torque	: 300 %	Service factor	:
Breakdown torque	: 270 %	Temperature rise	: 80 K
Rated speed	: 1740 rpm	Design	: N

Rev.	Changes Summary	Performed	Checked	Date

Performed by				
Checked by			Page	Revision
Date	12/07/2022		2 / 2	

This document is exclusive property of WEG S/A. Reprinting is not allowed without written authorization of WEG S/A.
Subject to change without notice

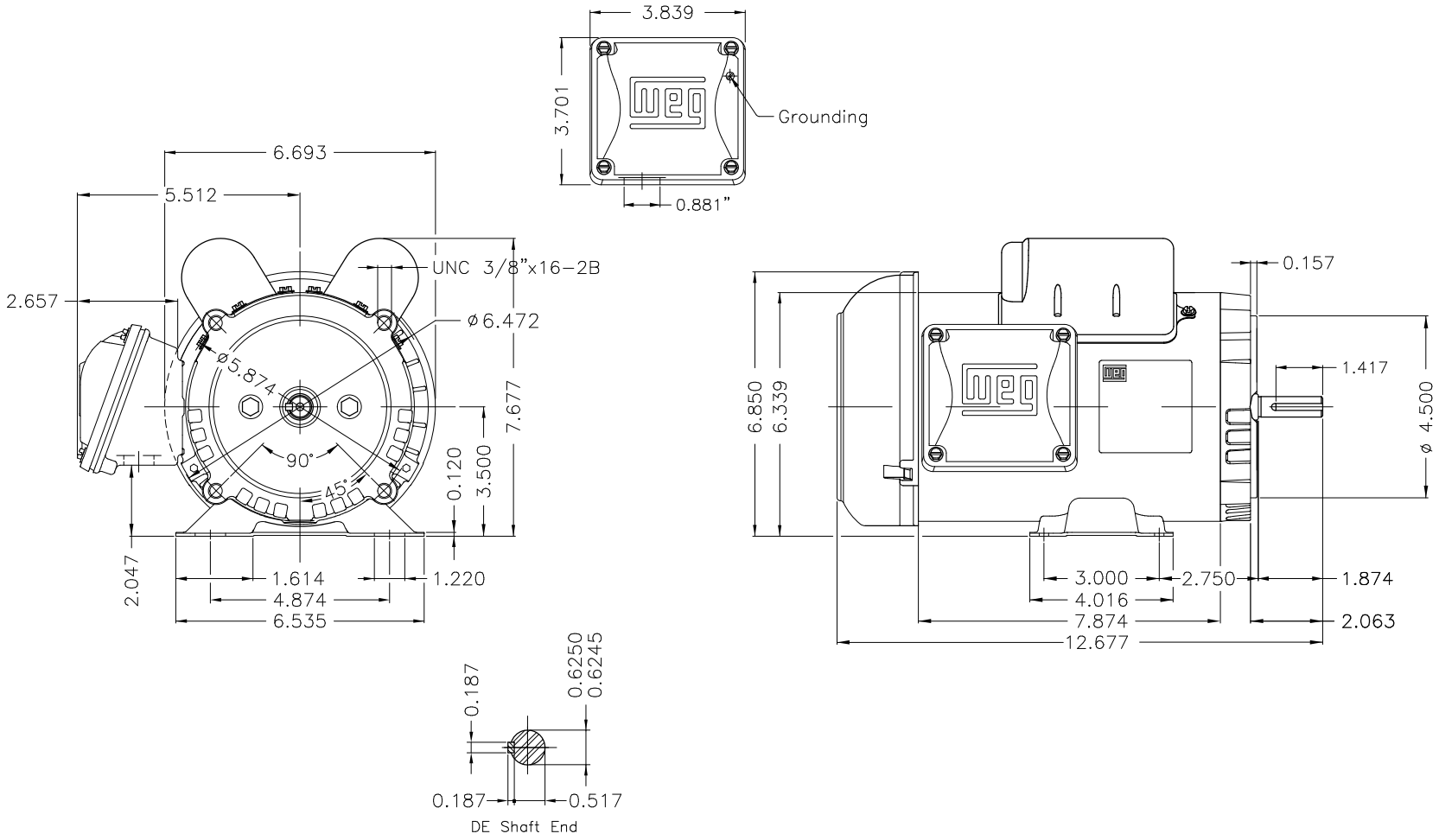

Color Munsell N 1 matte black	
Painting plan 207N	
Mounting F-1/B34R(D)	

ECM	LOC	SUMMARY OF MODIFICATIONS	EXECUTED	CHECKED	RELEASED	DATE	VER

EXECUTED	HYBRISUSER	SINGLE PH. MOTOR ROLLED STEEL PREM. EFF.	PREVIEW
CHECKED		FRAME W56C IP55 TEFC	WDD
RELEASED			
REL DT.		WMO Jaragua do Sul Product Engineering	SHEET 1 / 1

0.5 HP 04 Poles 60 Hz

A

Dimensions in Inches

XME A3

WEG's property. Forbidden reproduction without previous authorization.

Section 3.4.2.3

Dosing Pump

SMART Digital - DDA

up to 30 l/h

Installation and operating instructions



Further languages

http://net.grundfos.com/qr/i/95724708

be
think
innovate

GRUNDFOS

English (GB) Installation and operating instructions

Original installation and operating instructions

CONTENTS

		Page
1.	**Safety instructions**	**3**
1.1	Symbols used in this document	3
1.2	Qualification and training of personnel	3
1.3	Safety instructions for the operator/user	3
1.4	Safety of the system in the event of a failure in the dosing pump	3
1.5	Dosing chemicals	4
1.6	Diaphragm breakage	4
2.	**General information**	**5**
2.1	Applications	5
2.2	Improper operating methods	5
2.3	Symbols on the pump	6
2.4	Nameplate	6
2.5	Type key	7
2.6	Product overview	8
3.	**Technical data / Dimensions**	**9**
3.1	Technical data	9
3.2	Dimensions	11
4.	**Assembly and installation**	**12**
4.1	Pump assembly	12
4.1.1	Requirements	12
4.1.2	Align and install mounting plate	12
4.1.3	Engage pump in mounting plate	12
4.1.4	Adjusting control cube position	12
4.2	Hydraulic connection	13
4.3	Electrical connection	14
5.	**Startup**	**16**
5.1	Setting the menu language	16
5.2	Deaerating the pump	17
5.3	Calibrating the pump	17
6.	**Operation**	**19**
6.1	Control elements	19
6.2	Display and symbols	19
6.2.1	Navigation	19
6.2.2	Operating states	19
6.2.3	Sleep mode (energy-saving mode)	19
6.2.4	Overview of display symbols	20
6.3	Main menus	21
6.3.1	Operation	21
6.3.2	Info	21
6.3.3	Alarm	21
6.3.4	Setup	21
6.4	Operation modes	22
6.4.1	Manual	22
6.4.2	Pulse	22
6.4.3	Analog 0/4-20 mA	23
6.4.4	Batch (pulse-based)	24
6.4.5	Dosing timer cycle	25
6.4.6	Dosing timer week	25
6.5	Analog output	26
6.6	SlowMode	27
6.7	FlowControl	28
6.8	Pressure monitoring	29
6.8.1	Pressure setting ranges	29
6.8.2	Calibration of pressure sensor	29
6.9	Flow measurement	30
6.10	AutoFlowAdapt	30
6.11	Auto deaeration	30
6.12	Key lock	30
6.12.1	Temporary deactivation	30
6.12.2	Deactivation	30
6.13	Display Setup	31
6.13.1	Units	31
6.13.2	Additional display	31
6.14	Time+date	31
6.15	Bus communication	32
6.15.1	GENIbus communication	32
6.15.2	Possible industrial bus types	32
6.15.3	Activate communication	32
6.15.4	Setting the bus address	32
6.15.5	Characteristics of bus communication	33
6.15.6	Deactivate communication	33
6.15.7	Communication faults	33
6.16	Inputs/Outputs	34
6.16.1	Relay outputs	34
6.16.2	External stop	35
6.16.3	Empty and Low level signals	35
6.17	Basic settings	35
7.	**Service**	**36**
7.1	Regular maintenance	36
7.2	Cleaning	36
7.3	Service system	36
7.4	Perform service	37
7.4.1	Dosing head overview	37
7.4.2	Dismantling the diaphragm and valves	37
7.4.3	Reassembling the diaphragm and valves	38
7.5	Resetting the service system	38
7.6	Diaphragm breakage	38
7.6.1	Dismantling in case of diaphragm breakage	39
7.6.2	Dosing liquid in the pump housing	39
7.7	Repairs	39
8.	**Faults**	**40**
8.1	List of faults	41
8.1.1	Faults with error message	41
8.1.2	General faults	43
9.	**Disposal**	**43**



Warning

Prior to installation, read these installation and operating instructions. Installation and operation must comply with local regulations and accepted codes of good practice.

1. Safety instructions

These installation and operating instructions contain general instructions that must be observed during installation, operation and maintenance of the pump. It must therefore be read by the installation engineer and the relevant qualified operator prior to installation and start-up, and must be available at the installation location at all times.

1.1 Symbols used in this document



Warning
If these safety instructions are not observed, it may result in personal injury.

Caution — If these safety instructions are not observed, it may result in malfunction or damage to the equipment.

Note — Notes or instructions that make the job easier and ensure safe operation.

1.2 Qualification and training of personnel

The personnel responsible for the installation, operation and service must be appropriately qualified for these tasks. Areas of responsibility, levels of authority and the supervision of the personnel must be precisely defined by the operator. If necessary, the personnel must be trained appropriately.

Risks of not observing the safety instructions

Non-observance of the safety instructions may have dangerous consequences for the personnel, the environment and the pump and may result in the loss of any claims for damages.

It may lead to the following hazards:

- Personal injury from exposure to electrical, mechanical and chemical influences.
- Damage to the environment and personal injury from leakage of harmful substances.

1.3 Safety instructions for the operator/user

The safety instructions described in these instructions, existing national regulations on health protection, environmental protection and for accident prevention and any internal working, operating and safety regulations of the operator must be observed.

Information attached to the pump must be observed.

Leakages of dangerous substances must be disposed of in a way that is not harmful to the personnel or the environment.

Damage caused by electrical energy must be prevented, see the regulations of the local electricity supply company.

Caution — Before any work to the pump, the pump must be in the "Stop" operating state or be disconnected from the power supply. The system must be pressureless!

Note — The mains plug is the separator separating the pump from the mains.

Only original accessories and original spare parts should be used. Using other parts can result in exemption from liability for any resulting consequences.

1.4 Safety of the system in the event of a failure in the dosing pump

The dosing pump was designed according to the latest technologies and is carefully manufactured and tested.

If it fails regardless of this, the safety of the overall system must be ensured. Use the relevant monitoring and control functions for this.

Caution — Make sure that any chemicals that are released from the pump or any damaged lines do not cause damage to system parts and buildings.

The installation of leak monitoring solutions and drip trays is recommended.

1.5 Dosing chemicals

Warning

Before switching the supply voltage back on, the dosing lines must be connected in such a way that any chemicals in the dosing head cannot spray out and put people at risk.

The dosing medium is pressurised and can be harmful to health and the environment.

Warning

When working with chemicals, the accident prevention regulations applicable at the installation site should be applied (e.g. wearing protective clothing).

Observe the chemical manufacturer's safety data sheets and safety instructions when handling chemicals!

Caution

A deaeration hose, which is routed into a container, e.g. a drip tray, must be connected to the deaeration valve.

Caution

The dosing medium must be in liquid aggregate state!

Observe the freezing and boiling points of the dosing medium!

Caution

The resistance of the parts that come into contact with the dosing medium, such as the dosing head, valve ball, gaskets and lines, depends on the medium, media temperature and operating pressure.

Ensure that parts in contact with the dosing media are resistant to the dosing medium under operating conditions, see data booklet!

Should you have any questions regarding the material resistance and suitability of the pump for specific dosing media, please contact Grundfos.

1.6 Diaphragm breakage

If the diaphragm leaks or is broken, dosing liquid escapes from the drain opening (fig. 41, pos. 11) on the dosing head. Observe section *7.6 Diaphragm breakage*.

Warning

Danger of explosion, if dosing liquid has entered the pump housing!

Operation with damaged diaphragm can lead to dosing liquid entering the pump housing.

In case of diaphragm breakage, immediately separate the pump from the power supply!

Make sure the pump cannot be put back into operation by accident!

Dismantle the dosing head without connecting the pump to the power supply and make sure no dosing liquid has entered the pump housing. Proceed as described in section *7.6.1 Dismantling in case of diaphragm breakage*.

To avoid any danger resulting from diaphragm breakage, observe the following:

- Perform regular maintenance. See section *7.1 Regular maintenance*.
- Never operate the pump with blocked or soiled drain opening.
  - If the drain opening is blocked or soiled, proceed as described in section *7.6.1 Dismantling in case of diaphragm breakage*.
- Never attach a hose to the drain opening. If a hose is attached to the drain opening, it is impossible to recognise escaping dosing liquid.
- Take suitable precautions to prevent harm to health and damage to property from escaping dosing liquid.
- Never operate the pump with damaged or loose dosing head screws.

2. General information



The DDA dosing pump is a self-priming diaphragm pump. It consists of a housing with stepper motor and electronics, a dosing head with diaphragm and valves and the control cube.

Excellent dosing features of the pump:

- Optimal intake even with degassing media, as the pump always works at full suction stroke volume.
- Continuous dosing, as the medium is sucked up with a short suction stroke, regardless of the current dosing flow, and dosed with the longest possible dosing stroke.

2.1 Applications

The pump is suitable for liquid, non-abrasive, non-flammable and non-combustible media strictly in accordance with the instructions in these installation and operating instructions.

Areas of application

- Drinking water treatment
- Wastewater treatment
- Swimming pool water treatment
- Boiler water treatment
- CIP (Clean-In-Place)
- Cooling water treatment
- Process water treatment
- Wash plants
- Chemical industry
- Ultrafiltration processes and reverse osmosis
- Irrigation
- Paper and pulp industry
- Food and beverage industries

2.2 Improper operating methods

The operational safety of the pump is only guaranteed if it is used in accordance with section *2.1 Applications*.

Warning

Other applications or the operation of pumps in ambient and operating conditions, which are not approved, are considered improper and are not permitted. Grundfos cannot be held liable for any damage resulting from incorrect use.

Warning

The pump is NOT approved for operation in potentially explosive areas!

Warning

A sunscreen is required for outdoor installation!

Caution

Frequent disengagement from the mains voltage, e.g. via a relay, can result in damage to the pump electronics and in the breakdown of the pump. The dosing accuracy is also reduced as a result of internal start procedures.

Do not control the pump via the mains voltage for dosing purposes!

Only use the "External stop" function to start and stop the pump!

2.3 Symbols on the pump

Symbol	Description
	Indication of universally dangerous spot.
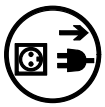	In case of emergency and prior to all maintenance work and repairs, take the mains plug out of the mains supply!
	The device complies with electrical safety class II.
	Connection for deaeration hose at dosing head. If the deaeration hose is not correctly connected, danger will arise due to possible leakage of dosing liquid!

2.4 Nameplate

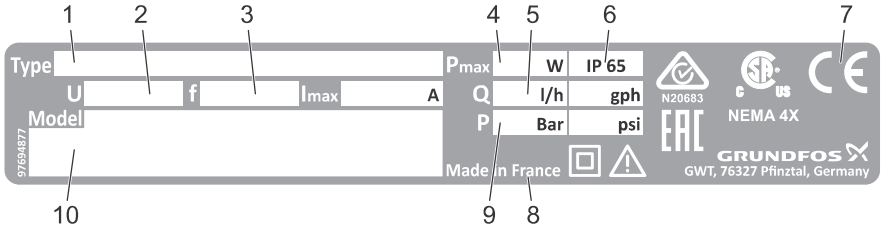

TM04 8144 1716

Fig. 1 Nameplate

Pos.	Description	Pos.	Description
1	Type designation	6	Enclosure class
2	Voltage	7	Mark of approval, CE mark, etc.
3	Frequency	8	Country of origin
4	Power consumption	9	Max. operating pressure
5	Max. dosing flow	10	Model

2.5 Type key

The type key is used to identify the precise pump and is not used for configuration purposes.

Code	Example	DDA	7.5-	16	AR-	PP/	V/	C-	F-	3	1	U2U2	F	G
	Pump type													
	Max. flow [l/h]													
	Max. pressure [bar]													
	Control variant													
AR	Standard													
FC	AR with FlowControl													
FCM	FC with integrated flow measurement													
	Dosing head material													
PP	Polypropylene													
PVC	PVC (polyvinyl chloride, only up to 10 bar)													
PV	PVDF (polyvinylidene fluoride)													
SS	Stainless steel DIN 1.4401													
	Gasket material													
E	EPDM													
V	FKM													
T	PTFE													
	Valve ball material													
C	Ceramic													
SS	Stainless steel DIN 1.4401													
	Control cube position													
F	Front-mounted (can be changed to the right or left)													
	Voltage													
3	1 x 100-240 V, 50/60 Hz													
	Valve type													
1	Standard													
2	Spring-loaded (HV version)													
	Suction/discharge side connection													
U2U2	Hose, 4/6 mm, 6/9 mm, 6/12 mm, 9/12 mm													
U7U7	Hose 0.17" x 1/4"; 1/4" x 3/8"; 3/8" x 1/2"													
AA	Threaded Rp 1/4", female (stainless steel)													
VV	Threaded 1/4" NPT, female (stainless steel)													
XX	No connection													
	Installation set*													
I001	Hose, 4/6 mm (up to 7.5 l/h, 13 bar)													
I002	Hose, 9/12 mm (up to 60 l/h, 9 bar)													
I003	Hose, 0.17" x 1/4" (up to 7.5 l/h, 13 bar)													
I004	Hose, 3/8" x 1/2" (up to 60 l/h, 10 bar)													
	Mains plug													
F	EU													
B	USA, Canada													
G	UK													
I	Australia, New Zealand, Taiwan													
E	Switzerland													
J	Japan													
L	Argentina													
	Design													
G	Grundfos													

* including: 2 pump connections, foot valve, injection unit, 6 m PE discharge hose, 2 m PVC suction hose, 2 m PVC deaeration hose (4/6 mm)

2.6 Product overview

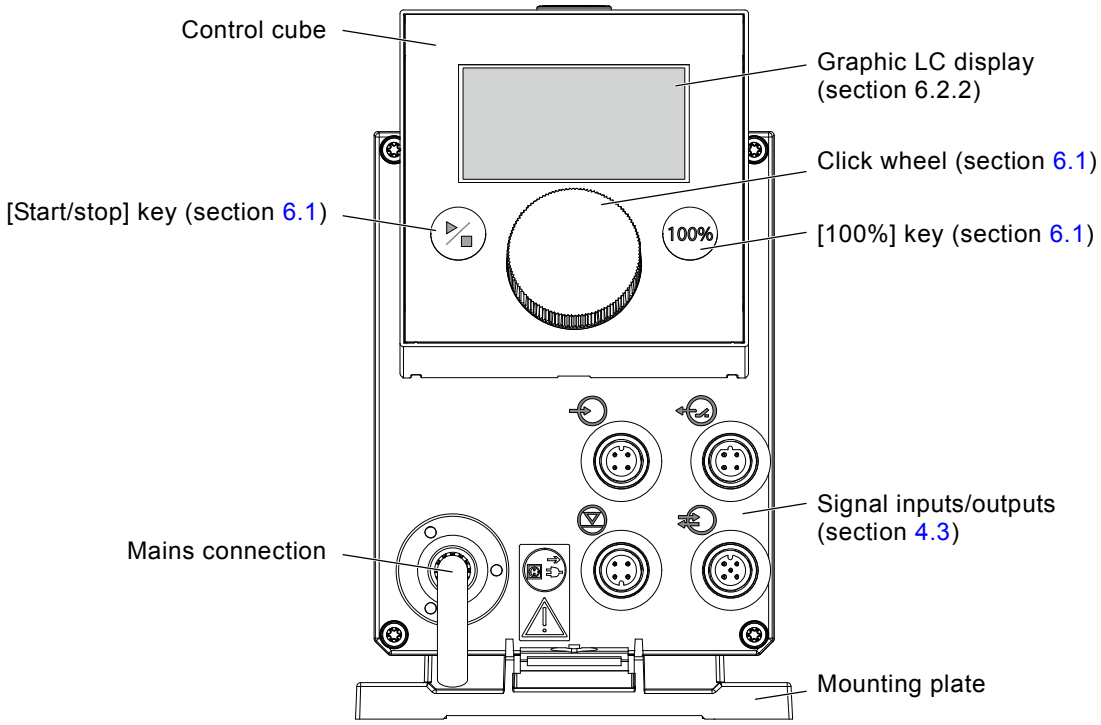

Fig. 2 Front view of the pump

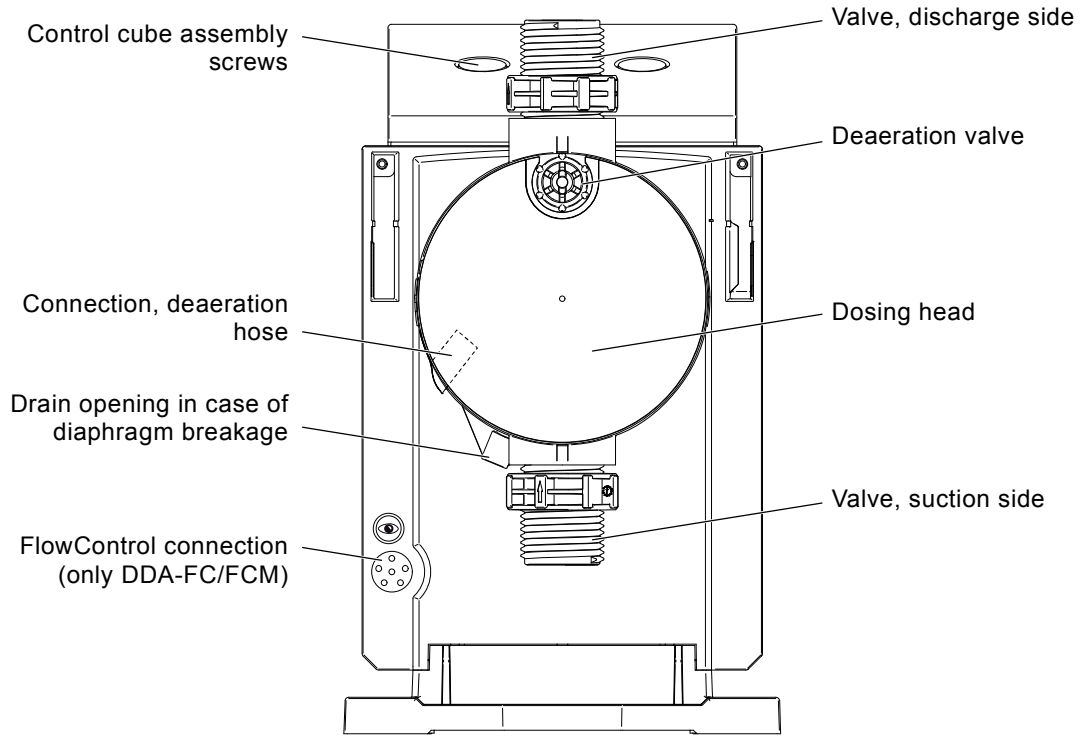

Fig. 3 Rear view of the pump

3. Technical data / Dimensions

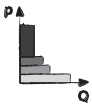

3.1 Technical data

Data			7.5-16	12-10	17-7	30-4
Mechanical data	Turn-down ratio (setting range)	[1:X]	3000	1000	1000	1000
	Max. dosing capacity	[l/h]	7.5	12.0	17.0	30.0
		[gph]	2.0	3.1	4.5	8.0
	Max. dosing capacity with SlowMode 50 %	[l/h]	3.75	6.00	8.50	15.00
		[gph]	1.00	1.55	2.25	4.00
	Max. dosing capacity with SlowMode 25 %	[l/h]	1.88	3.00	4.25	7.50
		[gph]	0.50	0.78	1.13	2.00
	Min. dosing capacity	[l/h]	0.0025	0.0120	0.0170	0.0300
		[gph]	0.0007	0.0031	0.0045	0.0080
	Max. operating pressure[6)]	[bar]	16	10	7	4
		[psi]	230	150	100	60
	Max. stroke frequency[1)]	[strokes/ min]	190	155	205	180
	Stroke volume	[ml]	0.74	1.45	1.55	3.10
	Accuracy of repeatability	[%]	± 1			
	Max. suction lift during operation[2)]	[m]	6			
	Max. suction lift when priming with wet valves[2)]	[m]	2	3	3	2
	Min. pressure difference between suction and discharge side	[bar]	1 (FC and FCM: 2)			
	Max. inlet pressure, suction side	[bar]	2			
	Max. viscosity in SlowMode 25 % with spring-loaded valves[3)]	[mPas] (= cP)	2500	2500	2000	1500
	Max. viscosity in SlowMode 50 % with spring-loaded valves[3)]	[mPas] (= cP)	1800	1300	1300	600
	Max. viscosity without SlowMode with spring-loaded valves[3)]	[mPas] (= cP)	600	500	500	200
	Max. viscosity without spring-loaded valves[3)]	[mPas] (= cP)	50	300	300	150
	Min. internal hose/pipe diameter suction/discharge side[2), 4)]	[mm]	4	6	6	9
	Min. internal hose/pipe diameter suction/discharge side (high viscosity)[4)]	[mm]	9			
	Min./Max. liquid temperature	[°C]	-10/45			
	Min./Max. ambient temperature	[°C]	0/45			
	Min./Max. storage temperature	[°C]	-20/70			
	Max. relative humidity (non-condensing)	[%]	96			
	Max. altitude above sea level	[m]	2000			

Data			7.5-16	12-10	17-7	30-4
Electrical data	Voltage	[V]	100-240 V, - 10 %/+ 10 %, 50/60 Hz			
	Length of mains cable	[m]	1.5			
	Max. inrush current for 2 ms (100 V)	[A]	8			
	Max. inrush current for 2 ms (230 V)	[A]	25			
	Max. power consumption P_1	[W]	24[5)]			
	Enclosure class		IP65, Nema 4X			
	Electrical safety class		II			
	Pollution degree		2			
Signal input	Max. load for level input		12 V, 5 mA			
	Max. load for pulse input		12 V, 5 mA			
	Max. load for External stop input		12 V, 5 mA			
	Min. pulse length	[ms]	5			
	Max. pulse frequency	[Hz]	100			
	Impedance at 0/4-20 mA analog input	[Ω]	15			
	Accuracy of analog input (full-scale value)	[%]	± 1.5			
	Min. resolution of analog input	[mA]	0.05			
	Max. resistance in level/pulse circuit	[Ω]	1000			
Signal output	Max. ohmic load on relay output	[A]	0.5			
	Max. voltage on relay/analog output	[V]	30 VDC/30 VAC			
	Impedance at 0/4-20 mA analog output	[Ω]	500			
	Accuracy of analog output (full-scale value)	[%]	± 1.5			
	Min. resolution of analog output	[mA]	0.02			
Weight/size	Weight (PVC, PP, PVDF)	[kg]	2.4	2.4		2.6
	Weight (stainless steel)	[kg]	3.2	3.2		4.0
	Diaphragm diameter	[mm]	44	50		74
Sound pressure	Max. sound pressure level	[dB(A)]	60			
Approvals			CE, CB, CSA-US, NSF61, EAC, ACS, C-Tick			

1) The maximum stroke frequency varies depending on calibration

2) Data is based on measurements with water

3) Maximum suction lift: 1 m, dosing capacity reduced (approx. 30 %)

4) Length of suction line: 1.5 m, length of discharge line: 10 m (at max. viscosity)

5) With E-Box

6) PVC (polyvinyl chloride), only up to 10 bar

3.2 Dimensions

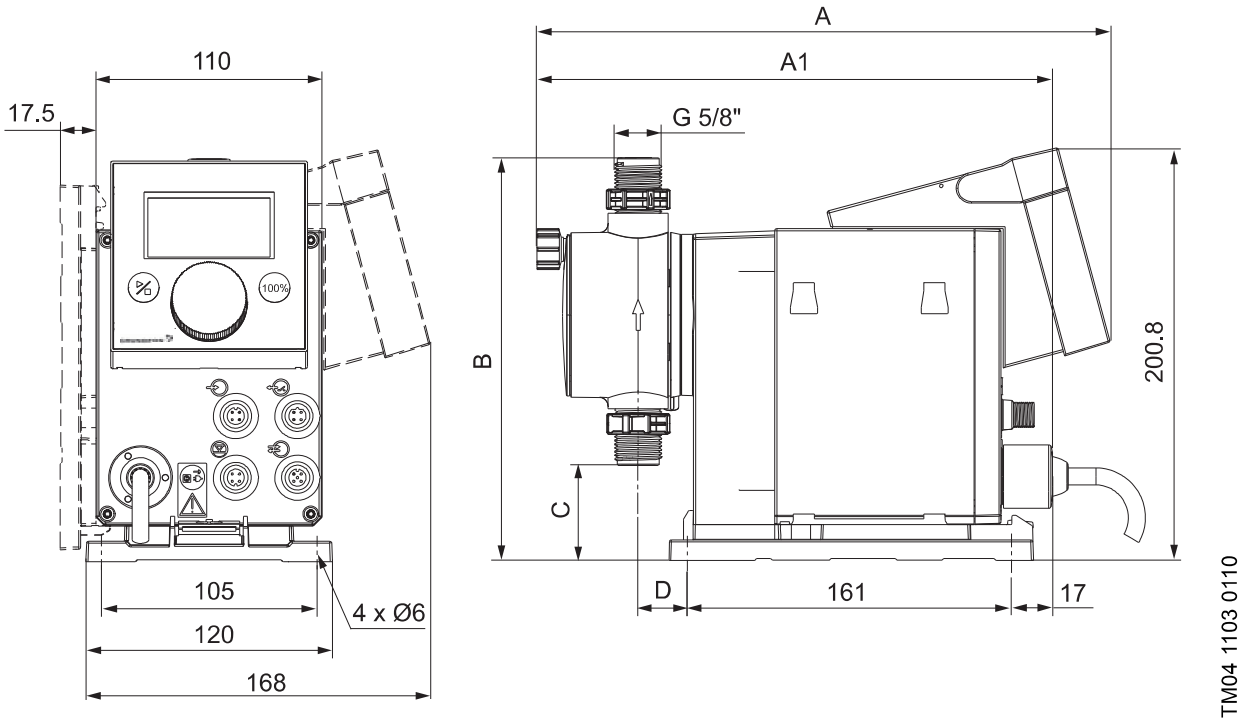

Fig. 4 Dimensional sketch

Pump type	A [mm]	A1 [mm]	B [mm]	C [mm]	D [mm]
DDA 7.5-16	280	251	196	46.5	24
DDA 12-10/17-7	280	251	200.5	39.5	24
DDA 30-4	295	267	204.5	35.5	38.5

4. Assembly and installation

For use in Australia:

Note

Installation of this product must comply with AS/NZS3500!

Certificate of suitability number: CS9431

C-tick number: N20683

4.1 Pump assembly

Warning

Install the pump in such a way that the plug can easily be reached by the operator during operation! This will enable the operator to separate the pump from the mains quickly in case of emergency!

The pump is delivered with a mounting plate. The mounting plate can be mounted vertically e.g. on a wall or horizontally e.g. on a tank. It takes just a few quick steps to firmly secure the pump to the mounting plate by means of a slot mechanism.

The pump can easily be released from the mounting plate for maintenance.

4.1.1 Requirements

- The mounting surface must be stable and must not vibrate.
- Dosing must flow upwards vertically.

4.1.2 Align and install mounting plate

- **Vertical installation**: Mounting plate slot mechanism must be above.
- **Horizontal installation**: Mounting plate slot mechanism must be opposite the dosing head.
- The mounting plate can be used as a drill template, please see fig. 4 for drill hole distances.



TM04 1162 0110

Fig. 5 Locate mounting plate

Warning

Make sure that you do not damage any cables and lines during installation!

1. Indicate drill holes.
2. Drill holes.
3. Secure mounting plate using four screws, diameter 5 mm, to the wall, on the bracket or the tank.

4.1.3 Engage pump in mounting plate

1. Attach the pump to the mounting plate support clamps and slide under slight pressure until it engages.

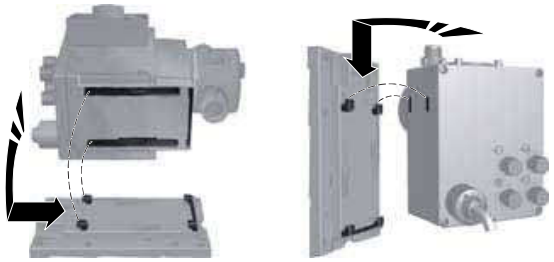

TM04 1159 0110

Fig. 6 Engaging the pump

4.1.4 Adjusting control cube position

The control cube is fitted to the front of the pump on delivery. It can be turned by 90 ° so that the user can select to operate the pump from the right or left side.

Caution

The enclosure class (IP65/Nema 4X) and shock protection are only guaranteed if the control cube is installed correctly!

Caution

Pump must be disconnected from the power supply!

1. Carefully remove both protective caps on the control cube using a thin screwdriver.
2. Loosen screws.
3. Carefully lift off control cube only so far from the pump housing that no tensile stress is produced on the flat band cable.
4. Turn control cube by 90 ° and re-attach.
   – Make sure the O-ring is secure.
5. Tighten screws slightly and attach protective caps.

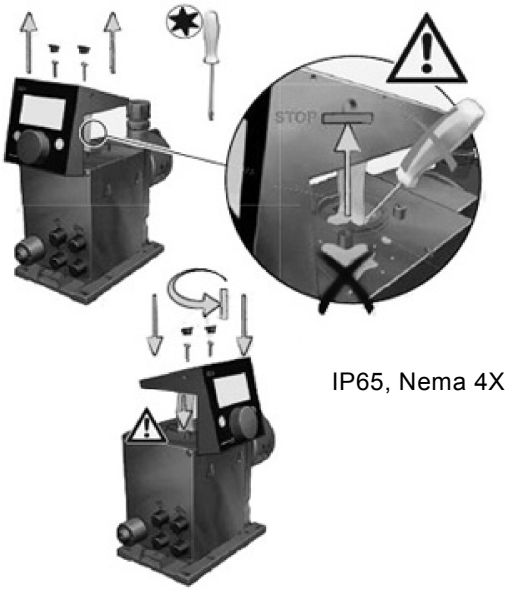

IP65, Nema 4X

TM04 1182 0110

Fig. 7 Adjusting control cube

4.2 Hydraulic connection

Warning

Risk of chemical burns!

Wear protective clothing (gloves and goggles) when working on the dosing head, connections or lines!

The dosing head may contain water from the factory check!

Caution When dosing media which should not come into contact with water, another medium must be dosed beforehand!

Caution Faultless function can only be guaranteed in conjunction with lines supplied by Grundfos!

Caution The lines used must comply with the pressure limits as per section *3.1 Technical data*!

Important information on installation

- Observe suction lift and line diameter, see section *3.1 Technical data*.
- Shorten hoses at right angles.
- Ensure that there are no loops or kinks in the hoses.
- Keep suction line as short as possible.
- Route suction line up towards the suction valve.
- Installing a filter in the suction line protects the entire installation against dirt and reduces the risk of leakage.
- Only control variant FC/FCM: For discharge quantities < 1 l/h we recommend the use of an additional spring-loaded valve (approx. 3 bar) on the discharge side for the safe generation of the necessary differential pressure.

Hose connection procedure

1. Push union nut and tensioning ring across hose.
2. Push cone part fully into hose, see fig. 8.
3. Attach cone part with hose to corresponding pump valve.
4. Tighten union nut manually.
   – Do not use tools!
5. Tighten up union nuts after 2-5 operating hours if using PTFE gaskets!
6. Attach deaeration hose to the corresponding connection (see fig. 3) and run into a container or a collecting tray.

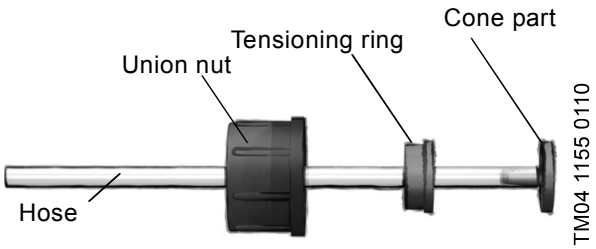

Fig. 8 Hydraulic connection

Note Pressure differential between suction and discharge side must be at least 1 bar/14.5 psi!

Caution Tighten the dosing head screws with a torque wrench once before commissioning and again after 2-5 operating hours at 4 Nm.

Installation example

The pump offers various installation options. In the picture below, the pump is installed in conjunction with a suction line, level switch and multifunction valve on a Grundfos tank.

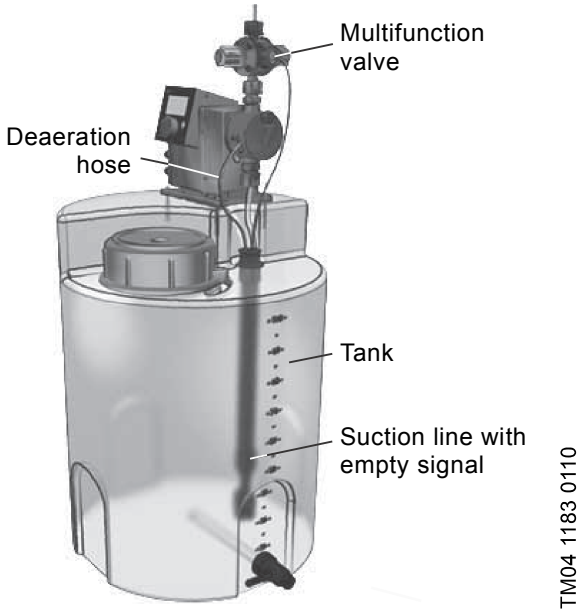

Fig. 9 Installation example

4.3 Electrical connection

Warning

The enclosure class (IP65/Nema 4X) is only guaranteed if plugs or protective caps are correctly installed!

Warning

The pump can start automatically when the mains voltage is switched on!

Do not manipulate mains plug or cable!

The mains plug is the separator separating the pump from the mains.

Note The rated voltage of the pump, see section *2.4 Nameplate*, must conform to local conditions.

Signal connections

Warning

Electric circuits of external devices connected to the pump inputs must be separated from dangerous voltage by means of double or reinforced insulation!

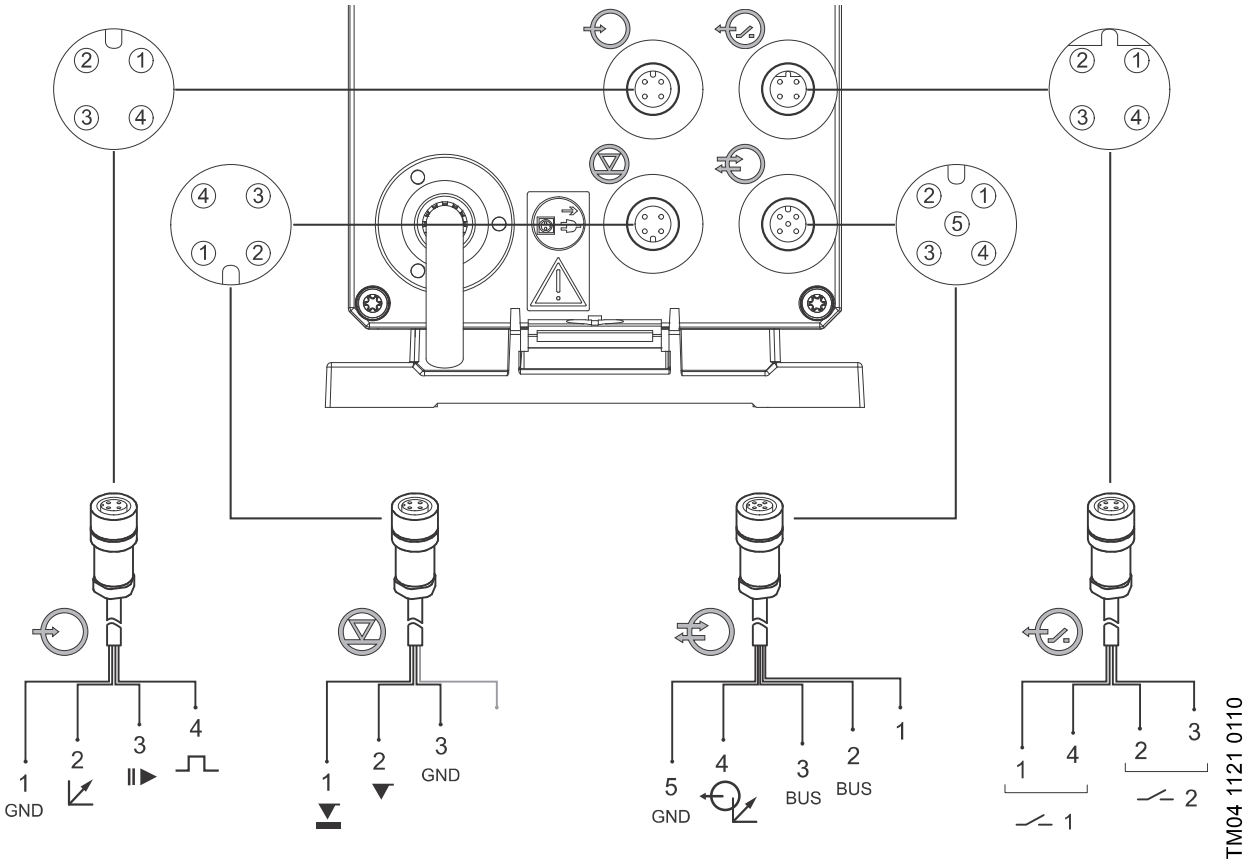

Fig. 10 Wiring diagram of the electrical connections

Analog, External stop and pulse input

Function	Pins				Plug type
	1/brown	2/white	3/blue	4/black	
Analog	GND/(-) mA	(+) mA			mA signal
External stop	GND		X		Pulse
Pulse	GND			X	Pulse

Level signals: Empty signal and Low-level signal

Function	Pins				Plug type
	1	2	3	4	
Low-level signal	X		GND		Pulse
Empty signal		X	GND		Pulse

GENIbus, Analog output

Caution

Danger of damage to the product due to short circuit! Pin 1 supplies 30 VDC.

Never short-circuit pin 1 with any of the other pins!

Function	Pins					Plug type
	1/brown	2/white	3/blue	4/black	5/yellow/ green	
GENIbus	+30 V	GENI bus TXD	GENI bus RXD		GND	Bus
Analog output				(+) mA	GND/(-) mA	mA signal

Relay outputs

Function	Pins				Plug type
	1/brown	2/white	3/blue	4/black	
Relay 1	X			X	Pulse
Relay 2		X	X		Pulse

FlowControl signal connection

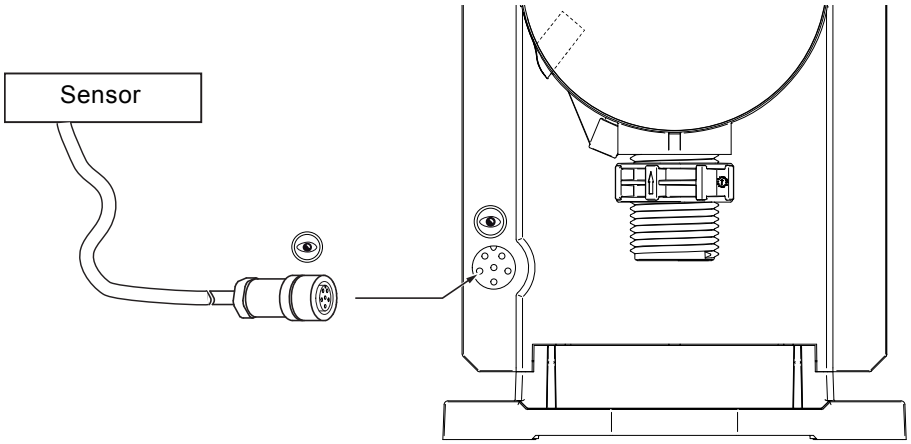

TM04 1158 1716

Fig. 11 FlowControl signal connection

5. Startup

5.1 Setting the menu language

For description of control elements, see section 6.

1. Turn click wheel to highlight the cog symbol.



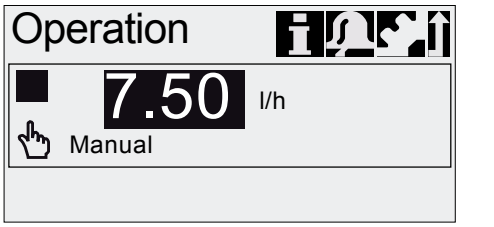

2. Press the click wheel to open the "Setup" menu.



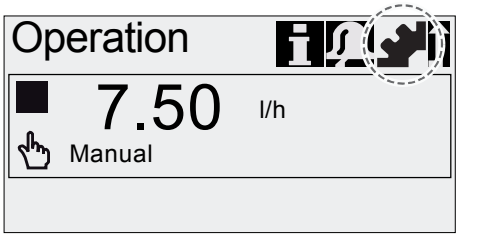

3. Turn the click wheel to highlight the "Language" menu.



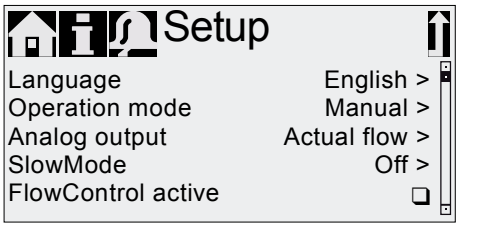

4. Press the click wheel to open the "Language" menu.



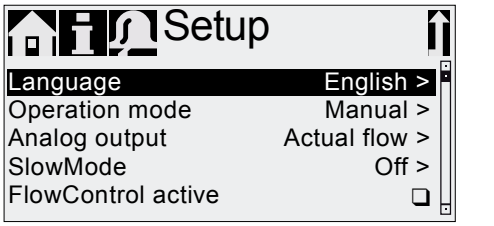

5. Turn the click wheel to highlight the desired language.





6. Press the click wheel to select the highlighted language.



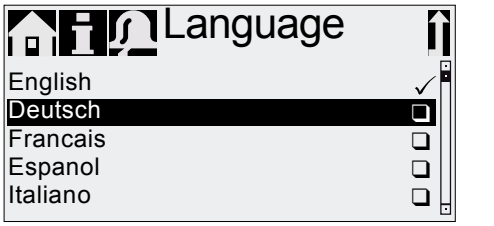

7. Press the click wheel again to confirm the "Confirm settings?" prompt and apply the setting.





TM04 1184 1110

Fig. 12 Set menu language

5.2 Deaerating the pump



Warning
The deaeration hose must be connected correctly and inserted into a suitable tank!

1. Open deaeration valve by approximately half a turn.
2. Press and hold down the [100%] key (deaeration key) until liquid flows continuously without any bubbles from the deaeration hose.
3. Close deaeration valve.

Note

Press the [100%] key and simultaneously turn the click wheel clockwise to increase the duration of the process to up to 300 seconds. After setting the seconds, do not press the key any longer.

5.3 Calibrating the pump

The pump is calibrated in the factory for media with a viscosity similar to water at maximum pump backpressure (see section *3.1 Technical data*).

If the pump is operated with a backpressure that deviates or if dosing a medium whose viscosity deviates, the pump must be calibrated.

For pumps with FCM control variant, it is not necessary to calibrate the pump if there is deviating or fluctuating backpressure as long as the "AutoFlowAdapt" function has been enabled (see section *6.10 AutoFlowAdapt*).

Requirements

- The hydraulics and electrics of the pump are connected (see section *4. Assembly and installation*).
- The pump is integrated into the dosing process under operating conditions.
- The dosing head and suction hose are filled with dosing medium.
- The pump has been deaerated.

Calibration process - example for DDA 7.5-16

1. Fill a measuring beaker with dosing medium. Recommended filling volumes V_1:
   – DDA 7.5-16: 0.3 l
   – DDA 12-10: 0.5 l
   – DDA 17-7: 1.0 l
   – DDA 30-4: 1.5 l

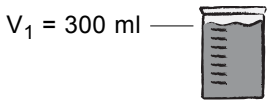

2. Read off and note down the fill volume V_1 (e.g. 300 ml).
3. Place the suction hose in the measuring beaker.



4. Start the calibration process in the "Setup > Calibration" menu.

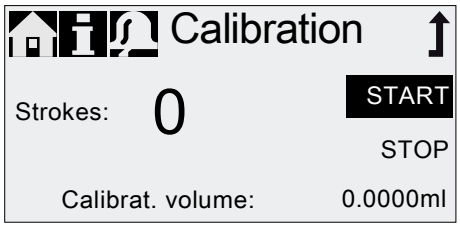

5. The pump executes 200 dosing strokes and displays the factory calibration value (e.g. 125 ml).

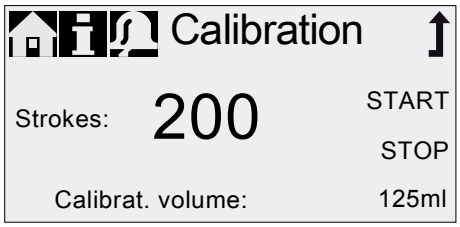

6. Remove the suction hose from the measuring beaker and check the remaining volume V_2 (e.g. 170 ml).

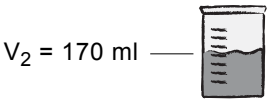

7. From V_1 and V_2, calculate the actual dosed volume $V_d = V_1 - V_2$ (e.g. 300 ml - 170 ml = 130 ml).

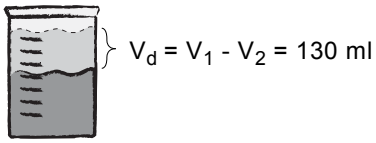

8. Set and apply V_d in the calibration menu.

• The pump is calibrated.

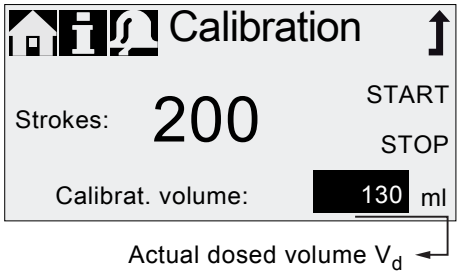

TM04 1154 1110

6. Operation

6.1 Control elements

The pump control panel includes a display and the following control elements.

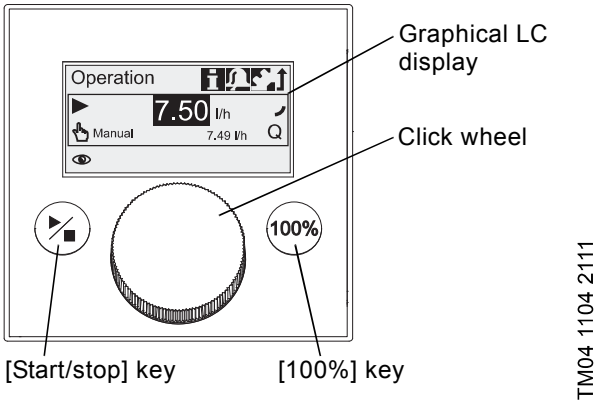

Fig. 13 Control panel

Keys

Key	Function
[Start/stop] key	Starting and stopping the pump.
[100%] key	The pump doses at maximum flow regardless of the operation mode.

Click wheel

The click wheel is used to navigate through the menus, select settings and confirm them.

Turning the click wheel clockwise moves the cursor clockwise in increments in the display. Turning the click wheel counter-clockwise moves the cursor counter-clockwise.

6.2 Display and symbols

6.2.1 Navigation

In the "Info", "Alarm" and "Setup" main menus, the options and submenus are displayed in the rows below. Use the "Back" symbol to return to the higher menu level. The scroll bar at the right edge of the display indicates that there are further menu items which are not shown.

The active symbol (current cursor position) flashes. Press the click wheel to confirm your selection and open the next menu level. The active main menu is displayed as text, the other main menus are displayed as symbols. The position of the cursor is highlighted in black in the sub-menus.

When you position the cursor on a value and press the click wheel, a value is selected. Turning the click wheel clockwise increases the value, turning the click wheel counter-clockwise reduces the value. When you now press the click wheel, the cursor will be released again.

6.2.2 Operating states

The operating state of the pump is indicated by a symbol and display colour.

Display	Fault	Operating state		
White	-	Stop ■	Standby ❙❙	
Green	-			Running ▶
Yellow	Warning	Stop ■	Standby ❙❙	Running ▶
Red	Alarm	Stop ■	Standby ❙❙	

6.2.3 Sleep mode (energy-saving mode)

If in the "Operation" main menu the pump is not operated for 30 seconds, the header disappears. After two minutes, the display brightness is reduced.

If in any other menu the pump is not operated for two minutes, the display switches back to the "Operation" main menu and the display brightness is reduced. This state will be cancelled when the pump is operated or a fault occurs.

6.2.4 Overview of display symbols

The following display symbols may appear in the menus.

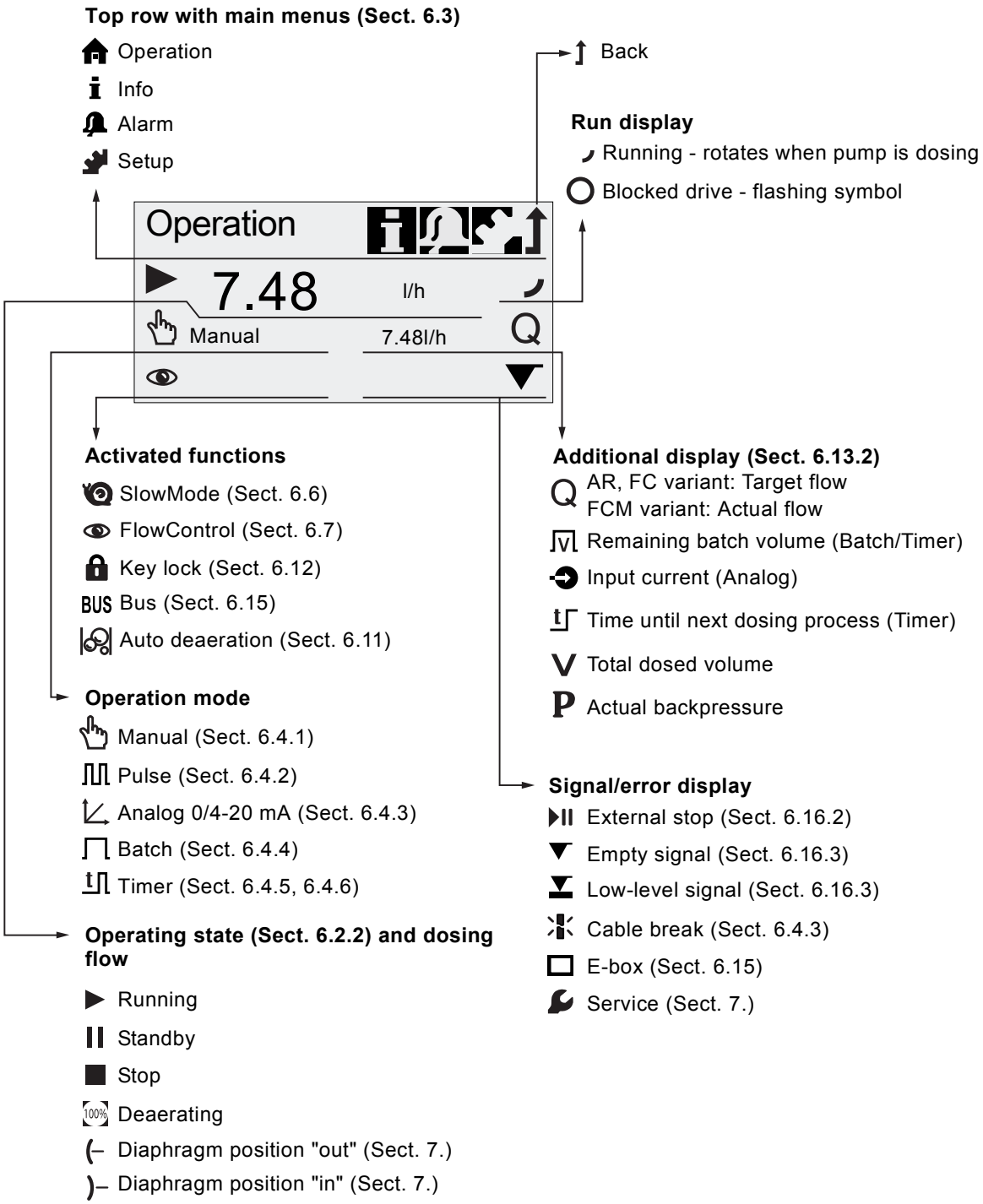

Fig. 14 Overview of display symbols

6.3 Main menus

The main menus are displayed as symbols at the top of the display. The currently active main menu is displayed as text.

6.3.1 Operation

Status information such as the dosing flow, selected operation mode and operating state is displayed in the "Operation" main menu.

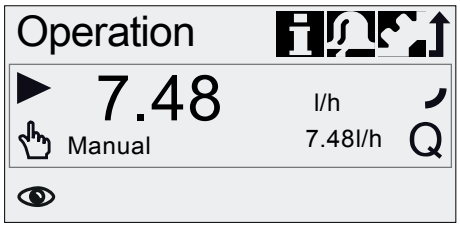

TM04 1157 2011

6.3.2 Info

You can find the date, time and information about the active dosing process, various counters, product data and the service system status in the "Info" main menu. The information can be accessed during operation.

The service system can also be reset from here.

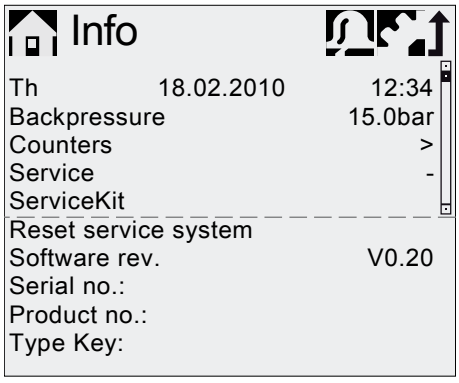

TM04 1106 1010

Counters

The "Info > Counters" menu contains the following counters:

Counters	Resettable
Volume Total dosed volume [l] or US gallons	Yes
Operating hours Accumulated operating hours (pump switched on) [h]	No
Motor runtime Accumulated motor runtime [h]	No
Strokes Accumulated number of dosing strokes	No
Power on/off Accumulated frequency of switching mains voltage on	No

6.3.3 Alarm

You can view errors in the "Alarm" main menu.

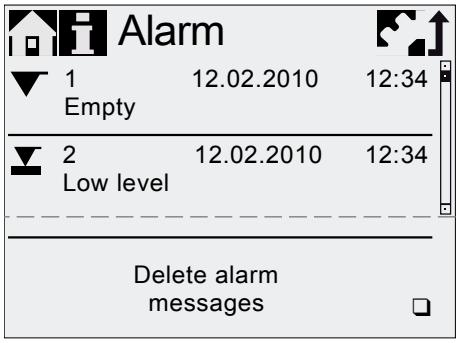

TM04 1109 1010

Up to 10 warnings and alarms, together with their date, time and cause, are listed in chronological order. If the list is full, the oldest entry will be overwritten, see section *8. Faults*.

6.3.4 Setup

The "Setup" main menu contains menus for pump configuration. These menus are described in the following sections.

Note Check all pump settings after any change in the "Setup" menu.

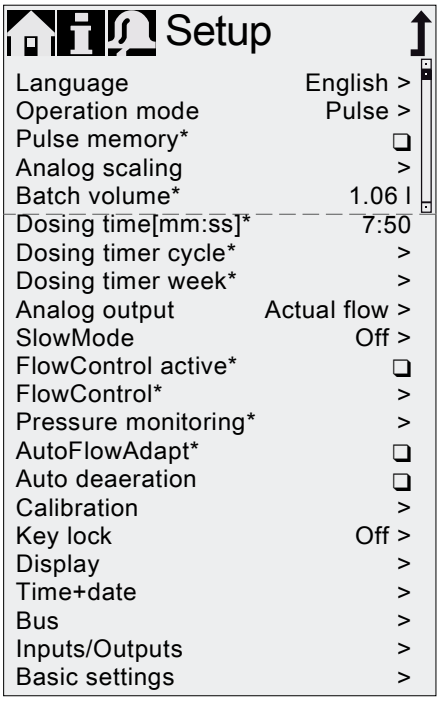

TM04 1110 1010

* These submenus are only displayed for specific default settings and control variants.
The contents of the "Setup" menu also vary depending on the operation mode.

6.4 Operation modes

Six different operation modes can be set in the "Setup > Operation mode" menu.

- Manual, see section 6.4.1
- Pulse, see section 6.4.2
- Analog 0-20 mA, see section 6.4.3
  Analog 4-20 mA, see section 6.4.3
- Batch (pulse-based), see section 6.4.4
- Dosing timer cycle, see section 6.4.5
- Dosing timer week, see section 6.4.6

6.4.1 Manual

In this operation mode, the pump constantly doses the dosing flow set with the click wheel. The dosing flow is set in l/h or ml/h in the "Operation" menu. The pump automatically switches between the units. Alternatively, the display can be reset to US units (gph). See section *6.13 Display Setup*.

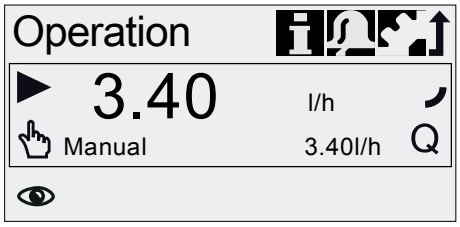

TM04 1125 1110

Fig. 15 Manual mode

The setting range depends on the pump type:

Type	Setting range*	
	[l/h]	[gph]
DDA 7.5-16	0.0025 - 7.5	0.0007 - 2.0
DDA 12-10	0.012 - 12	0.0031 - 3.1
DDA 17-7	0.017 - 17	0.0045 - 4.5
DDA 30-4	0.03 - 30	0.0080 - 8.0

* When the "SlowMode" function is active, the maximum dosing flow is reduced, see section *3.1 Technical data*.

6.4.2 Pulse

In this operation mode, the pump doses the set dosing volume for each incoming (potential-free) pulse, e.g. from a water meter. The pump automatically calculates the optimum stroke frequency for dosing the set volume per pulse.

The calculation is based on:

- the frequency of external pulses
- the set dosing volume/pulse.

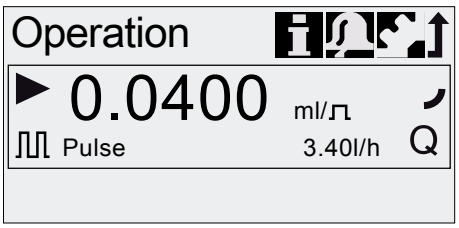

TM04 1126 1110

Fig. 16 Pulse mode

The dosing volume per pulse is set in ml/pulse in the "Operation" menu using the click wheel. The setting range for the dosing volume depends on the pump type:

Type	Setting range [ml/pulse]
DDA 7.5-16	0.0015 - 14.9
DDA 12-10	0.0029 - 29.0
DDA 17-7	0.0031 - 31.0
DDA 30-4	0.0062 - 62.0

The frequency of incoming pulses is multiplied by the set dosing volume. If the pump receives more pulses than it can process at the maximum dosing flow, it runs at the maximum stroke frequency in continuous operation. Excess pulses will be ignored if the memory function is not enabled.

Memory function

When the "Setup > Pulse memory" function is enabled, up to 65,000 unprocessed pulses can be saved for subsequent processing.

Warning
Subsequent processing of saved pulses can cause local increase in concentration!

The contents of the memory will be deleted by:

- Switching off the power supply
- Changing the operation mode
- Interruption (e.g. alarm, External stop).

6.4.3 Analog 0/4-20 mA

In this operation mode, the pump doses according to the external analog signal.
The dosing volume is proportional to the signal input value in mA.

Operation mode	Input value [mA]	Dosing flow [%]
4-20 mA	≤ 4.1	0
	≥ 19.8	100
0-20 mA	≤ 0.1	0
	≥ 19.8	100

If the input value in operation mode 4-20 mA falls below 2 mA, an alarm is displayed and the pump stops. A cable break or signal transmitter error has occurred. The "Cable break" symbol is displayed in the "Signal and error display" area of the display.

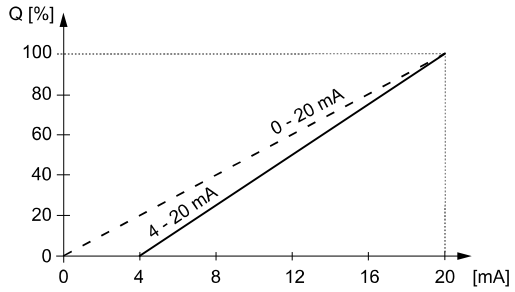

TM04 1120 2010

Fig. 17 Analog scaling

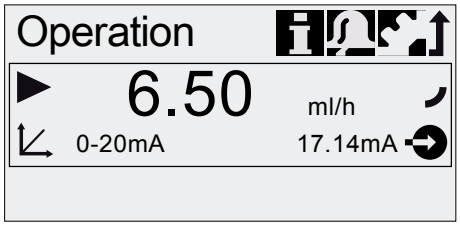

TM04 1127 1110

Fig. 18 Analog operation mode

Set analog scaling

Analog scaling refers to the assignment of the current input value to the dosing flow.

Changes of analog scaling affect also the analog output signal. See section *6.5 Analog output*.

Analog scaling passes through the two reference points (I_1/Q_1) and (I_2/Q_2), which are set in the "Setup > Analog scaling" menu. The dosing flow is controlled according to this setting.

Example 1 (DDA 7.5-16)

Analog scaling with positive gradient:

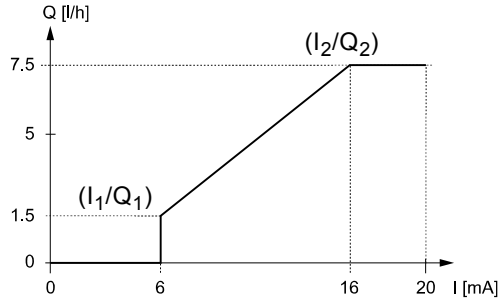

TM04 1160 2010

Fig. 19 Analog scaling with pos. gradient

In example 1, the reference points I_1 = 6 mA, Q_1 = 1.5 l/h and I_2 = 16 mA, Q_2 = 7.5 l/h have been set.

From 0 to 6 mA analog scaling is described by a line that passes through Q = 0 l/h, between 6 mA and 16 mA it rises proportionally from 1.5 l/h to 7.5 l/h and from 16 mA onwards it passes through Q = 7.5 l/h.

Example 2 (DDA 7.5-16)

Analog scaling with negative gradient (Operation mode 0-20 mA):

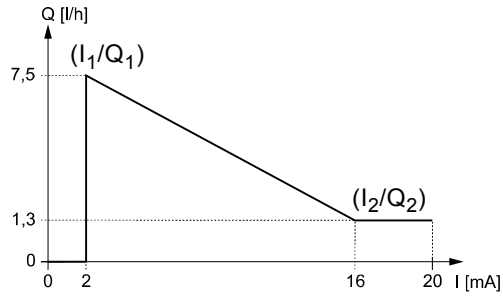

TM04 1101 2010

Fig. 20 Analog scaling with neg. gradient

In example 2, the reference points I_1 = 2 mA, Q_1 = 7.5 l/h and I_2 = 16 mA, Q_2 = 1.3 l/h have been set.

From 0 to 2 mA analog scaling is described by a line that passes through Q = 0 l/h, between 2 mA and 16 mA it drops proportionally from 7.5 l/h to 1.3 l/h and from 16 mA onwards it passes through Q_2 = 1.3 l/h.

Set analog scaling in the "Operation" menu

Analog scaling can also be modified after a security prompt directly in the "Operation" menu. This is how the dosing flow is directly modified for the current flow input value.

Caution Please observe that changes also have a direct effect on point I_2/Q_2 (see fig. 21)!

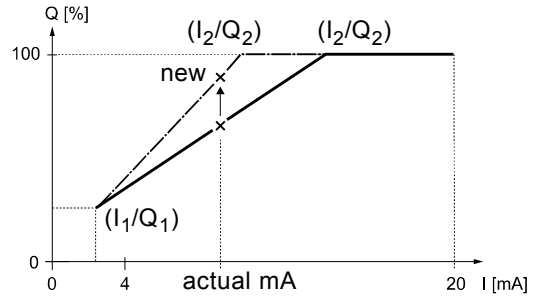

Fig. 21 Set analog scaling ("Operation" menu)

6.4.4 Batch (pulse-based)

In this operation mode, the pump doses the set batch volume in the set dosing time (t_1). A batch is dosed with each incoming pulse.

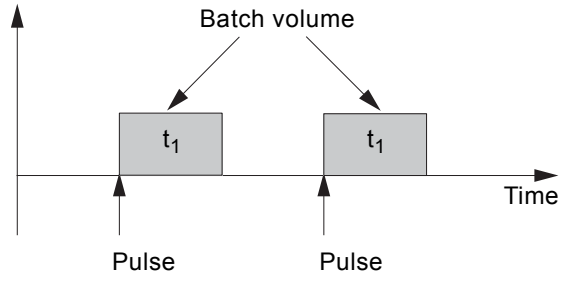

Fig. 22 Batch (pulse-based)

The setting range depends on the pump type:

Type	Setting range per batch		
	from [ml]	to [l]	Resolution* [ml]
DDA 7.5-16	0.74	999	0.0925
DDA 12-10	1.45	999	0.1813
DDA 17-7	1.55	999	0.1938
DDA 30-4	3.10	999	0.3875

* Thanks to the digital motor control, dosing quantities with a resolution of up to 1/8 of the dosing stroke volume can be dosed.

The batch volume (e.g. 75 ml) is set in the "Setup > Batch volume" menu. The minimum dosing time required for this (e.g. 36 seconds) is displayed and can be increased.

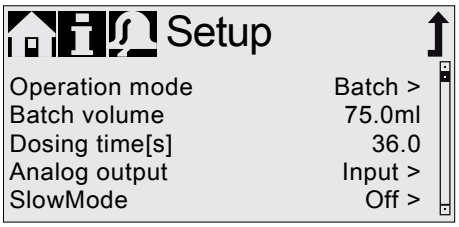

Fig. 23 Batch mode

Signals received during a batch process or an interruption (e.g. alarm, External stop) will be ignored. If the pump is restarted following an interruption, the next batch volume is dosed on the next incoming pulse.

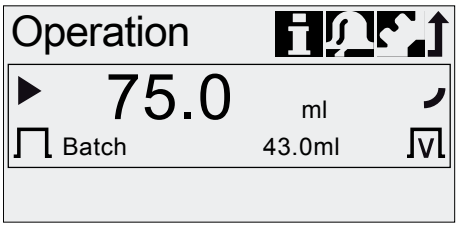

Fig. 24 Batch mode

In the "Operation" menu, the total batch volume (e.g. 75 ml) and the remaining batch volume still to be dosed (e.g. 43 ml) are shown in the display.

6.4.5 Dosing timer cycle

In this operation mode, the pump doses the set batch volume in regular cycles.
Dosing starts when the pump is started after a singular start delay. The setting range for the batch volume corresponds to the values in section *6.4.4 Batch (pulse-based)*.

Warning

When time or date is changed in "Time+date" menu, timer dosing and timer relay output functions (Relay 2) are stopped!

Timer dosing and timer relay output functions must be restarted manually!

Changing time or date can cause increase or decrease in concentration!

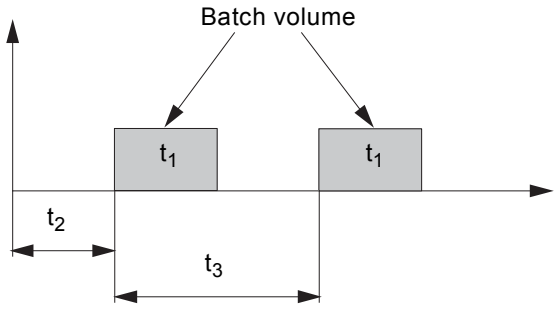

Fig. 25 Dosing timer cycle diagram

t_1	Dosing time
t_2	Start delay
t_3	Cycle time

In the event of an interruption (e.g. interruption of the mains voltage, External stop), the dosing will be stopped while the time continues running.
After suspending the interruption, the pump will continue to dose according to the actual timeline position.

The following settings are required in the "Setup > Dosing timer cycle" menu:

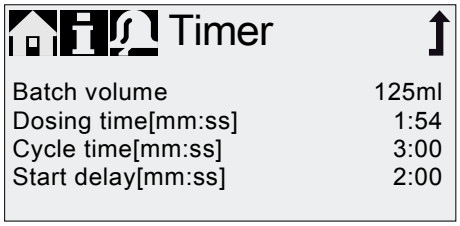

Fig. 26 Dosing timer cycle

The batch volume to be dosed (e.g. 125 ml) is set in the "Setup > Dosing timer cycle" menu. The dosing time required for this (e.g. 1:54) is displayed and can be changed.

The total batch volume (e.g. 125 ml) and the remaining batch volume still to be dosed are displayed in the "Operation" menu. During breaks in dosing, the time until the next dosing process (e.g. 1:21) is displayed.

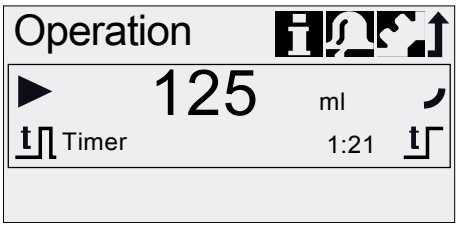

Fig. 27 Dosing timer cycle

6.4.6 Dosing timer week

In this operation mode, up to 16 dosing procedures are defined for a week.
These dosing procedures may take place regularly on one or several week days. The setting range for the batch volume corresponds to the values in section *6.4.4 Batch (pulse-based)*.

Warning

When time or date is changed in "Time+date" menu, timer dosing and timer relay output functions (Relay 2) are stopped!

Timer dosing and timer relay output functions must be restarted manually!

Changing time or date can cause increase or decrease in concentration!

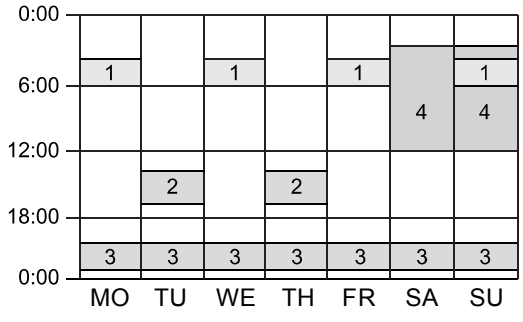

Fig. 28 Example for Dosing timer week function

Note If several procedures overlap, the process with the higher dosing flow has priority!

In the event of an interruption (e.g. disconnection of the mains voltage, External stop), the dosing is stopped while the time continues running.
After suspending the interruption, the pump continues to dose according to the actual timeline position.

The following settings are required in the "Setup > Dosing timer week" menu for each dosing procedure:

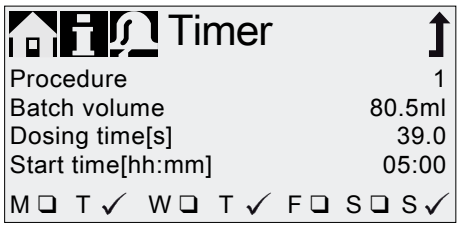

TM04 1138 1110

Fig. 29 Setting the timer

The batch volume (e.g. 80.5 ml) is set in the "Setup > Dosing timer week" menu. The dosing time required for this (e.g. 39.0) is displayed and can be changed.

In the "Operation" menu, the total batch volume (e.g. 80.5 ml) and the remaining batch volume to be dosed is displayed. During breaks in dosing, the time (e.g. 43:32) until the next dosing is displayed.

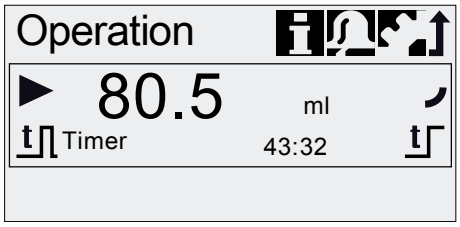

TM04 1136 1110

Fig. 30 Weekly timer dosing (break in dosing)

6.5 Analog output

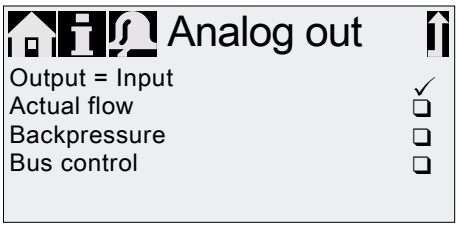

TM04 1153 1110

Fig. 31 Configure analog output

The analog output of the pump is parametrised in the "Setup > Analog output" menu. The following settings are possible:

Setting	Description of output signal	Variant FCM	FC	AR
Output = Input	Analog feedback signal (not for master-slave application). The analog input signal is mapped 1:1 to the analog output.	X	X	X
Actual flow**	Current actual flow • 0/4 mA = 0 % • 20 mA = 100 % see section *6.9 Flow measurement*	X	X*	X*
Backpressure	Backpressure, measured in the dosing head • 0/4 mA = 0 bar • 20 mA = Max. operating pressure see section *6.8 Pressure monitoring*	X	X	
Bus control	Enabled by command in Bus control, see section *6.15 Bus communication*	X	X	X

* Output signal is based on motor speed and pump status (target flow).

** Signal has same analog scaling as the current analog input signal. See *6.4.3 Analog 0/4-20 mA*.

Wiring diagram see section *4.3 Electrical connection*.

Note

In all operation modes, the analog output has a range of 4-20 mA. Exception: Operation mode 0-20 mA. Here, the analog output range is 0-20 mA.

6.6 SlowMode

When the "SlowMode" function is enabled, the pump slows down the suction stroke. The function is enabled in the "Setup > SlowMode" menu and is used to prevent cavitation in the following cases:

- for dosing media with a high viscosity
- for degassing dosing media
- for long suction lines
- for large suction lift.

In the "Setup > SlowMode" menu, the speed of the suction stroke can be reduced to 50 % or 25 %.

Caution Enabling the 'SlowMode' function reduces the maximum dosing flow of the pump to the set percentage value!

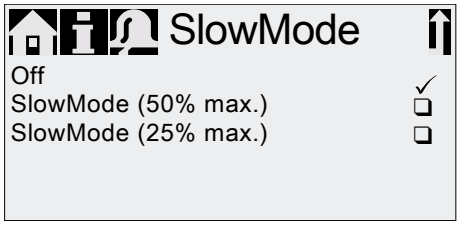

TM04 1153 1110

Fig. 32 SlowMode menu

6.7 FlowControl

Applies to DDA-FC/FCM control variant.

This function is used to monitor the dosing process. Although the pump is running, various influences e.g. air bubbles, can cause a reduced flow or even stop the dosing process. In order to guarantee optimum process safety, the enabled "FlowControl" function directly detects and indicates the following errors and deviations:

- Overpressure
- Damaged discharge line
- Air in the dosing chamber
- Cavitation
- Suction valve leakage > 70 %
- Discharge valve leakage > 70 %.

The occurrence of a fault is indicated by the "eye" symbol flashing. The faults are displayed in the "Alarm" menu (see section *8. Faults*).

FlowControl works with a maintenance-free sensor in the dosing head. During the dosing process, the sensor measures the current pressure and continuously sends the measured value to the microprocessor in the pump. An internal indicator diagram is created from the current measured values and the current diaphragm position (stroke length). Causes for deviations can be identified immediately by aligning the current indicator diagram with a calculated optimum indicator diagram. Air bubbles in the dosing head reduce e.g. the discharge phase and consequently the stroke volume (see fig. 33).

Requirements for a correct indicator diagram are:

- FlowControl function is active
- pressure difference between suction and discharge side is > 2 bar
- No interruption/pause in discharge stroke
- Pressure sensor and cable are functioning properly
- No leakage > 50 % in suction or discharge valve

If one of these requirements is not met, the indicator diagram cannot be evaluated.

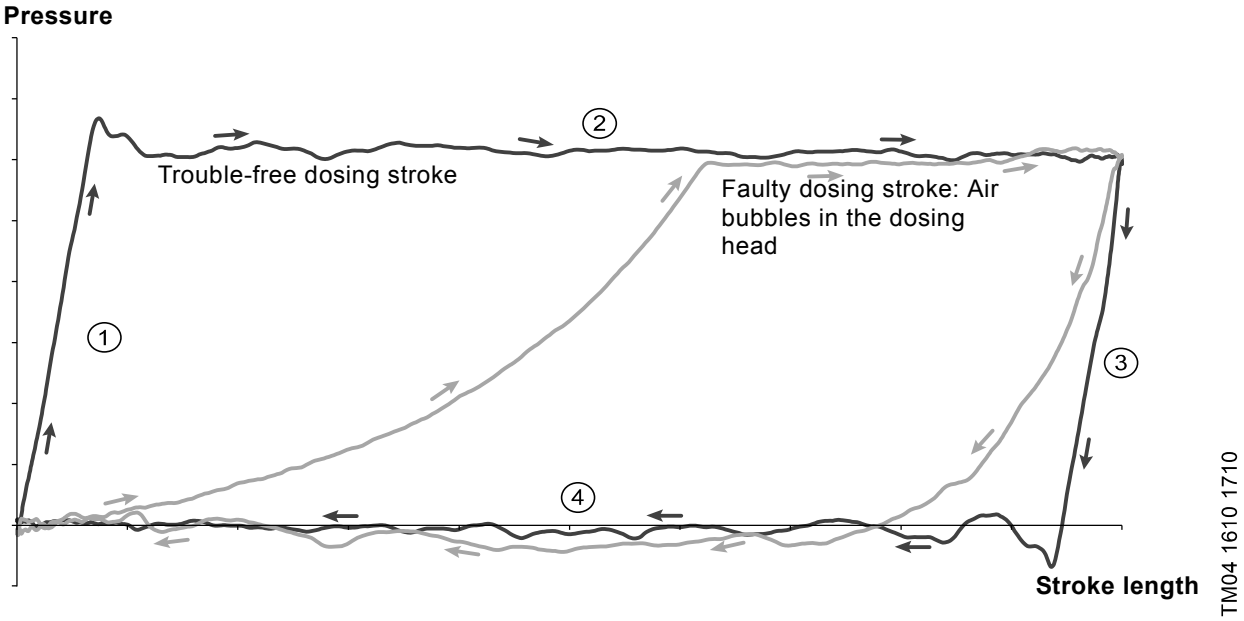

Fig. 33 Indicator diagram

1	Compression phase
2	Discharge phase
3	Expansion phase
4	Suction phase

Setting FlowControl

The "FlowControl" function is set using the two parameters "Sensitivity" and "Delay" in the "Setup > FlowControl" menu.

Sensitivity

In "Sensitivity" the deviation in stroke volume, which will result in an error message, is set in percent.

Sensitivity	Deviation
low	approx. 70 %
medium	approx. 50 %
high	approx. 30 %

Delay

The "Delay" parameter is used to define the time period until an error message is generated: "short", "medium" or "long". The delay depends on the set dosing flow and therefore cannot be measured in strokes or time.

Air bubbles

The "FlowControl" function identifies air bubbles > 60 % of the stroke volume. After switching to "Air bubble" warning status, the pump adapts the stroke frequency to approximately 30-40 % of max. stroke frequency, and starts a special motor drive strategy. The adaptation of the stroke frequency allows the air bubbles to rise from suction to discharge valve. Due to the special motor drive strategy the air bubbles are displaced from the dosing head into the discharge line.

If the air bubbles have not been eliminated after a maximum of 60 strokes, the pump returns to the normal motor drive strategy.

6.8 Pressure monitoring

Applies to DDA-FC/FCM control variant.

A pressure sensor monitors the pressure in the dosing head. If the pressure during the discharge phase falls below 2 bar, a warning is generated (pump continues running). If in the "Setup > Pressure monitoring" menu the function "Min. pressure alarm" is activated, an alarm is generated and the pump is stopped.

If the pressure exceeds the "Max. pressure" set in the "Setup > Pressure monitoring" menu, the pump is shut down, enters the standby state and indicates an alarm.

Caution

The pump restarts automatically once the backpressure falls below the set "Max. pressure"!

6.8.1 Pressure setting ranges

Type	Fixed min. pressure [bar]	Adjustable max. pressure [bar]
DDA 7.5-16	< 2	3-17
DDA 12-10	< 2	3-11
DDA 17-7	< 2	3-8
DDA 30-4	< 2	3-5

Warning

Install a pressure-relief valve in the pressure line to provide protection against impermissibly high pressure!

Caution

The pressure measured in the dosing head is slightly higher than the actual system pressure.

Therefore the "Max. pressure " should be set at least 0.5 bar higher than the system pressure.

6.8.2 Calibration of pressure sensor

The pressure sensor is calibrated in the factory. As a rule, it does not need to be re-calibrated. If specific circumstances (e.g. pressure sensor exchange, extreme air pressure values at the location of the pump) necessitate a calibration, the sensor can be calibrated as follows:

1. Set pump to "Stop" operating state.
2. Make system pressureless and flush.
3. Dismantle suction line and suction valve.

Warning

Calibrating when the suction valve is installed produces incorrect calibration and can cause personal injuries and damage to property!

Only carry out a calibration if this is technically required!

4. Proceed as described below to calibrate:

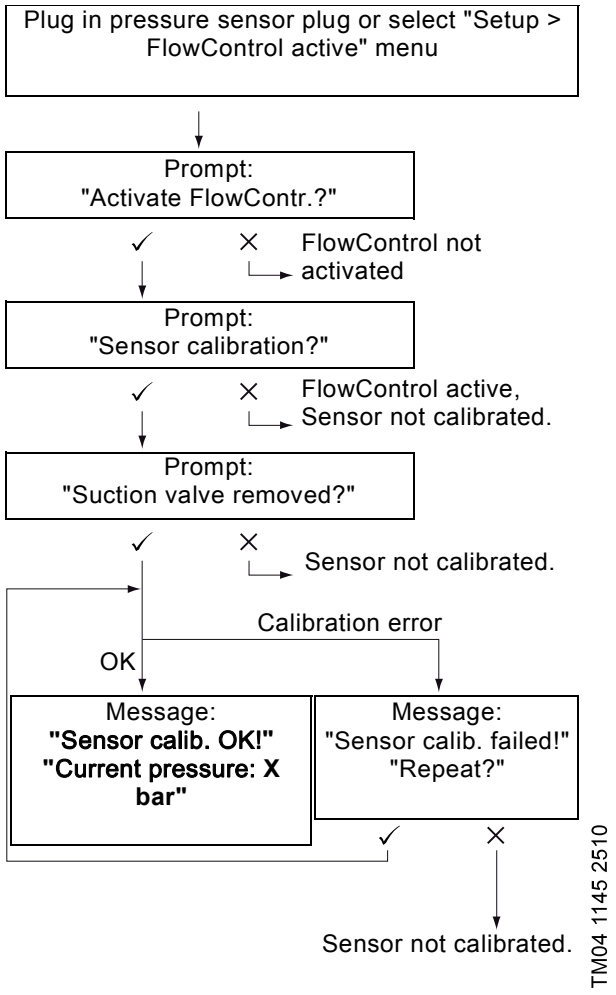

If a calibration is not successfully possible, check plug connections, cable and sensor and replace defective parts where necessary.

6.9 Flow measurement

Applies to DDA-FCM control variant.

The pump accurately measures the actual flow and displays it. Via the 0/4-20 mA analog output, the actual flow signal can easily be integrated into an external process control without additional measuring equipment (see section *6.5 Analog output*).

The flow measurement is based on the indicator diagram as described in section *6.7 FlowControl*. The accumulated length of the discharge phase multiplied by the stroke frequency produces the displayed actual flow. Faults e.g. air bubbles or backpressure that is too low result in a smaller or larger actual flow. When the "AutoFlowAdapt" function is activated (see section *6.10 AutoFlowAdapt*), the pump compensates for these influences by correction of the stroke frequency.

Note

Strokes which cannot be analysed (partial strokes, pressure differential which is too low) are provisionally calculated based on the setpoint value and displayed.

6.10 AutoFlowAdapt

Applies to DDA-FCM control variant.

The "AutoFlowAdapt" function is activated in the "Setup" menu. It detects changes in various parameters and responds accordingly in order to keep the set target flow constant.

Note

Dosing accuracy is increased when "AutoFlowAdapt" is activated.

This function processes information from the pressure sensor in the dosing head. Errors detected by the sensor are processed by the software. The pump responds immediately regardless of the operation mode by adjusting the stroke frequency or where necessary compensating for the deviations with a corresponding indicator diagram.

If the target flow cannot be achieved by the adjustments, a warning is issued.

"AutoFlowAdapt" operates on the basis of the following functions:

- FlowControl: malfunctions are identified (see section *6.7 FlowControl*).
- Pressure monitoring: pressure fluctuations are identified (see section *6.8 Pressure monitoring*).
- Flow measurement: deviations from the target flow are identified (see section *6.9 Flow measurement*).

Example of "AutoFlowAdapt"

Pressure fluctuations

The dosing volume decreases as backpressure increases and conversely the dosing volume increases as the backpressure decreases.

The "AutoFlowAdapt" function identifies pressure fluctuations and responds by adjusting the stroke frequency. The actual flow is thus maintained at a constant level.

6.11 Auto deaeration

Dosing degassing media can result in air pockets in the dosing head during breaks in dosing. This can result in no medium being dosed when restarting the pump. The "Setup > Auto deaeration" function performs pump deaeration automatically at regular intervals. Software-controlled diaphragm movements encourage any bubbles to rise and gather at the discharge valve so that they can be removed on the next dosing stroke.

The function works:

- when the pump is not in the "Stop" operating state
- during breaks in dosing (e.g. External stop, no incoming pulses, etc.).

Note

The diaphragm movements can displace small volumes into the discharge line. When dosing strongly degassing media, this is however virtually impossible.

6.12 Key lock

The key lock is set in the "Setup > Key lock" menu by entering a four-digit code. It protects the pump by preventing changes to settings. Two levels of key lock can be selected:

Level	Description
Settings	All settings can only be changed by entering the lock code. The [Start/stop] key and the [100%] key are not locked.
Settings + keys	The [Start/stop] key and the [100%] key and all settings are locked.

It is still possible to navigate in the "Alarm" and "Info" main menu and reset alarms.

6.12.1 Temporary deactivation

If the "Key lock" function is activated but settings need to be modified, the keys can be unlocked temporarily by entering the deactivation code. If the code is not entered within 10 seconds, the display automatically switches to the "Operation" main menu. The key lock remains active.

6.12.2 Deactivation

The key lock can be deactivated in the "Setup > Key lock" menu via the "Off" menu point. The key lock is deactivated after the general code "2583" or a pre-defined custom code has been entered.

6.13 Display Setup

Use the following settings in the "Setup > Display" menu to adjust the display properties:

- Units (metric/US)
- Display contrast
- Additional display.

6.13.1 Units

Metric units (litres/millilitres/bar) or US units (US gallons/PSI) can be selected. According to the operation mode and menu, the following units of measurement are displayed:

Operation mode / function	Metric units	US units
Manual control	ml/h or l/h	gph
Pulse control	ml/⊓	ml/⊓
0/4-20 mA Analog control	ml/h or l/h	gph
Batch (pulse- or timer-controlled)	ml or l	gal
Calibration	ml	ml
Volume counter	l	gal
Pressure monitoring	bar	psi

6.13.2 Additional display

The additional display provides additional information about the current pump status. The value is shown in the display with the corresponding symbol.

In "Manual" mode the "Actual flow" information can be displayed with Q = 1.28 l/h (see fig. 34).

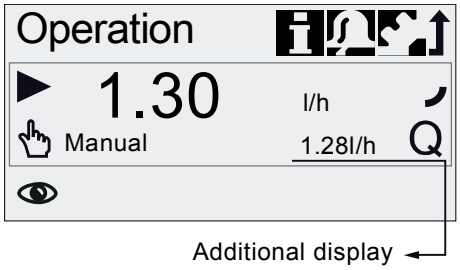

TM04 1151 2011

Fig. 34 Display with additional display

The additional display can be set as follows:

Setting	Description
Default display	Depending on the operation mode:
	Q Actual flow (Manual/Pulse)[1), 2)]
	Q Target flow (Pulse)
	Input current (analog)
	Remaining batch volume (Batch, Timer)
	t Period until next dosing (Timer)
Dosed volume	V Dosed vol. since last reset (see *Counters* on page 21)
Actual flow	Q Current actual flow[1)]
Backpressure	P Current backpressure in the dosing head[3)]

1) only DDA-FCM control variant

2) only if indicator diagram can be evaluated (see *6.7 FlowControl*)

3) only DDA-FCM/FC control variant

6.14 Time+date

The time and date can be set in the "Setup > Time+date" menu.

Warning

When time or date is changed in "Time+date" menu, timer dosing and timer relay output functions (Relay 2) are stopped!

Timer dosing and timer relay output functions must be restarted manually!

Changing time or date can cause increase or decrease in concentration!

Caution

The conversion between summer and winter time does not take place automatically!

6.15 Bus communication

BUS

The bus communication enables remote monitoring and setting of the pump via a fieldbus system.

Further manuals, functional profiles and support files (e.g. GSD-files) are available on the CD delivered with the interface hardware and on www.grundfos.com.

6.15.1 GENIbus communication

The pump is supplied with an integrated module for GENIbus communication. The pump identifies the bus control after connecting to the corresponding signal input. The "Activate communication?" prompt is displayed. After confirmation, the corresponding symbol appears in the "Activated functions" area in the "Operation" menu.

In the "Setup > Bus" menu the GENIbus address can be set from 32 to 231 and bus control can be deactivated.



TM04 1139 2410

Fig. 35 Bus menu

Caution The maximum cable length for GENIbus connection is 3 m and must not be exceeded!

6.15.2 Possible industrial bus types

The pump can be integrated into several networks using the additional E-box (Extension-Box).

Bus type	Interface hardware	Retrofitting possible for pump software
Profibus® DP	E-Box 150	V2.0 and higher
Modbus RTU	E-Box 200	V2.5 and higher

The pump can also be connected to a Grundfos CIU unit (CIU = Communication Interface Unit) equipped with one of the following CIM modules (CIM = Communication Interface Module):

- CIM150 Profibus
- CIM200 Modbus
- CIM270 GRM
- CIM500 Ethernet

For internal communication between the E-Box/CIU and the dosing pump, GENIbus is used.

Caution The maximum cable length for GENIbus connection is 3 m and must not be exceeded!

Caution Prior to installation and start-up, read the documentation delivered with the E-Box or CIU unit!

6.15.3 Activate communication

1. Set the pump to operating state "Stop" with the [Start/stop] key.
2. Switch off the power supply of the pump.
3. Install and connect the E-Box/CIU as described in the respective separate installation and operating instructions.
4. Switch on the power supply of the pump.

The "Activate communication?" prompt is displayed.

After confirmation, the "Bus" symbol appears in the "Activated functions" area of the "Operation" menu, no matter if the prompt was accepted or refused.

If the prompt has been accepted, the bus control function is activated. If the prompt has been refused, bus control function can be activated in "Setup > Bus" menu.

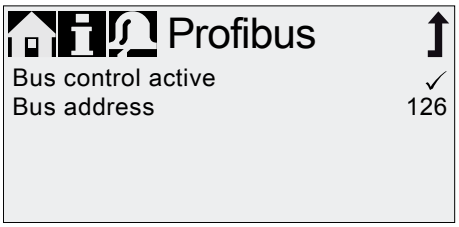

TM04 1139 2410

Fig. 36 Example of submenu for Profibus®

6.15.4 Setting the bus address

1. Enter "Setup > Bus" menu and set desired bus address:

Bus type	Address range
Profibus® DP	~~0 – 126~~0-126
Modbus RTU	~~1 – 247~~1-247

2. The pump needs to be restarted to initialise the new bus address. Switch off the power supply of the pump and wait for approximately 20 seconds.
3. Switch on the power supply of the pump.

The pump is initialised with the new bus address.

6.15.5 Characteristics of bus communication

To start and stop the pump via bus, it needs to be in operating state "Running". When the pump is remotely stopped from bus, the "External stop" symbol is displayed and the pump switches to operating state "Standby".

While bus control function is activated, the "Setup" menu only shows the "Bus" and "Key lock" submenus. The other main menus, the "External stop" function and the keys are still available.

All operation modes (see section *6.4 Operation modes*) can still be used when bus control is activated. This allows to use the bus control only for monitoring and setting the pump. In this case the respective "BusWatchDog" (see funtional profile on E-Box/CIU product CD) should be deactivated in bus control, because otherwise faults in communication can stop the pump.

Note

To change any settings manually, the bus control function must be deactivated temporarily.

The analog output can not be used while the pump is bus-controlled as both functions use the same electrical connection. See section *4.3 Electrical connection*.

6.15.6 Deactivate communication



Warning

After deactivating the bus control function, the pump can start automatically!

Before deactivating the bus control function, set the pump to operating state "Stop"!

Bus control function can be deactivated in the "Setup > Bus" menu. After deactivation all submenus in "Setup" menu are available.

The "Bus" symbol in the display disappears at next restart of the pump, after the E-Box/CIU plug was disconnected.

Caution

After disconnecting any plug, always refit protective cap!

6.15.7 Communication faults

Faults are only detected, if the respective "BusWatchDog" (see functional profile on E-Box/CIU product CD) is activated.



Warning

After a communication fault is repaired, the pump can start automatically, depending on current bus control and pump settings!

Before repairing any fault, set the pump to operating state "Stop"!

In case of bus communication faults (e.g. communication cable break), the pump stops dosing and switches to operating state "Standby" approximately 10 seconds after the fault was detected. An alarm is triggered, detailing the cause of the fault. See section *8. Faults*.

6.16 Inputs/Outputs

In the "Setup > Inputs/Outputs" menu, you can configure the two outputs "Relay 1+Relay 2" and the signal inputs "External stop", "Empty signal" and "Low-level signal".

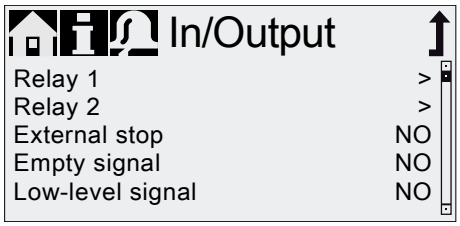

TM04 1152 1110

Fig. 37 Inputs/Outputs menu

Warning

When time or date is changed in "Time+date" menu, timer dosing and timer relay output functions (Relay 2) are stopped!

Timer dosing and timer relay output functions must be restarted manually!

Changing time or date can cause increase or decrease in concentration!

6.16.1 Relay outputs

The pump can switch two external signals using installed relays. The relays are switched by potential-free pulses. The connection diagram of the relays is shown in section *4.3 Electrical connection*. Both relays can be allocated with the following signals:

Relay 1 signal	Relay 2 signal	Description
Alarm*	Alarm	Display red, pump stopped (e.g. empty signal, etc.)
Warning*	Warning	Display yellow, pump is running (e.g. low-level signal, etc.)
Stroke signal	Stroke signal	Each full stroke
Pump dosing	Pump dosing*	Pump running and dosing
Pulse input**	Pulse input**	Each incoming pulse from pulse input
Bus control	Bus control	Activated by a command in the bus communication
	Timer Cycle	See following sections
	Timer Week	See following sections
Contact type		
NO*	NO*	Normally open contact
NC	NC	Normally closed contact

* Factory setting

** The correct transmission of incoming pulses can only be guaranteed up to a pulse frequency of 5 Hz.

Timer Cycle (Relay 2)

For the "Relay 2 > Timer Cycle" function, set the following parameters:

- On (t_1)
- Start delay (t_2)
- Cycle time (t_3)

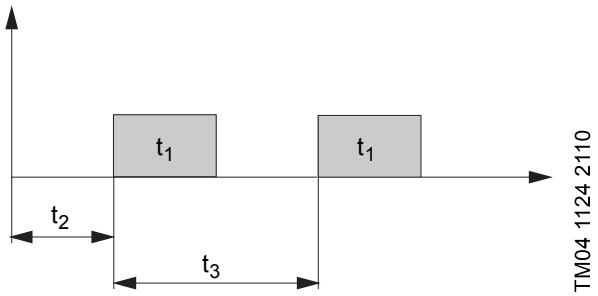

Fig. 38 Diagram

Timer Week (Relay 2)

This function saves up to 16 relay on-times for a week. The following settings can be made for each relay switching operation in the "Relay 2 > Timer Week" menu:

- Procedure (No.)
- On time (duration)
- Start time
- Weekdays.

6.16.2 External stop

The pump can be stopped via an external pulse, e.g. from a control room. When activating the external stop pulse, the pump switches from the operating state "Running" into the operating state "Standby". The corresponding symbol appears in the "Signal/error display" area of the display.

Caution

Frequent disengagement from the mains voltage, e.g. via a relay, can result in damage to the pump electronics and in the breakdown of the pump. The dosing accuracy is also reduced as a result of internal start procedures.

Do not control the pump via the mains voltage for dosing purposes!

Only use the "External stop" function to start and stop the pump!

The contact type is factory-set to normally open contact (NO). In the "Setup > Inputs/Outputs > External stop" menu, the setting can be changed to normally closed contact (NC).

6.16.3 Empty and Low level signals

In order to monitor the filling level in the tank, a dual-level sensor can be connected to the pump. The pump responds to the signals as follows:

Sensor signal	Pump status
Low level	• Display is yellow • ⧗ Flashes • Pump continues running
Empty	• Display is red • ▼ Flashes • Pump stops

Caution When the tank is filled up again, the pump restarts automatically!

Both signal inputs are allocated to the normally open contact (NO) in the factory. They can be re-allocated in the "Setup > Inputs/Outputs" menu to normally closed contact (NC).

6.17 Basic settings

All settings can be reset to the settings default upon delivery in the "Setup > Basic settings" menu.

Selecting "Save customer settings" saves the current configuration to the memory. This can then be activated using "Load customer settings".

The memory always contains the previously saved configuration. Older memory data is overwritten.

7. Service

In order to ensure a long service life and dosing accuracy, wearing parts such as diaphragms and valves must be regularly checked for signs of wear. Where necessary, replace worn parts with original spare parts made from suitable materials.

Should you have any questions, please contact your service partner.

Warning

Maintenance work must only be carried out by qualified staff.

7.1 Regular maintenance

Interval	Task
Daily	Check, if liquid leaks from the drain opening (fig. 41, pos. 11) and if the drain opening is blocked or soiled. If so, follow the instructions given in section *7.6 Diaphragm breakage*.
	Check, if liquid leaks from the dosing head or valves. If necessary, tighten dosing head screws with a torque wrench at 4 Nm. If necessary, tighten valves and cap nuts, or perform service (see *7.4 Perform service*).
	Check, if a service requirement is present at the pump display. If so, follow the instructions given in section *7.3 Service system*.
Weekly	Clean all pump surfaces with a dry and clean cloth.
Every 3 months	Check dosing head screws. If necessary, tighten dosing head screws with a torque wrench at 4 Nm. Replace damaged screws immediately.

7.2 Cleaning

If necessary, clean all pump surfaces with a dry and clean cloth.

7.3 Service system

According to the motor runtime or after a defined period of operation, service requirements will appear. Service requirements appear regardless of the current operating state of the pump and do not affect the dosing process.

Service requirement	Motor runtime [h]*	Time interval [months]*
Service soon!	7500	23
Service now!	8000	24

* Since the last service system reset

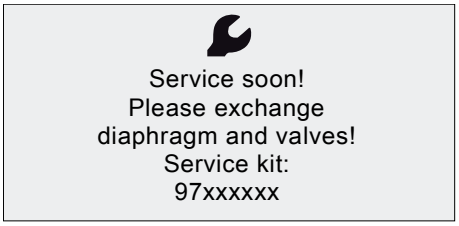

TM04 1131 1110

Fig. 39 Service soon!

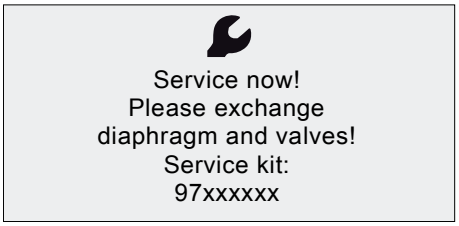

TM04 1131 1110

Fig. 40 Service now!

Caution For media which result in increased wear, the service interval must be shortened.

The service requirement signals when the replacement of wearing parts is due and displays the number of the service kit. Press the click wheel to temporarily hide the service prompt.

When the "Service now!" message appears (displayed daily), the pump must be serviced immediately. The symbol appears in the "Operation" menu.

The number of the service kit required is also displayed in the "Info" menu.

7.4 Perform service

Only spare parts and accessories from Grundfos should be used for maintenance. The usage of non-original spare parts and accessories renders any liability for resulting damages null and void.

Further information about carrying out maintenance can be found in the service kit catalogue on our homepage. See www.grundfos.com.

Warning

Risk of chemical burns!

When dosing dangerous media, observe the corresponding precautions in the safety data sheets!

Wear protective clothing (gloves and goggles) when working on the dosing head, connections or lines!

Do not allow any chemicals to leak from the pump. Collect and dispose of all chemicals correctly!

Caution

Before any work to the pump, the pump must be in the "Stop" operating state or be disconnected from the power supply. The system must be pressureless!

7.4.1 Dosing head overview

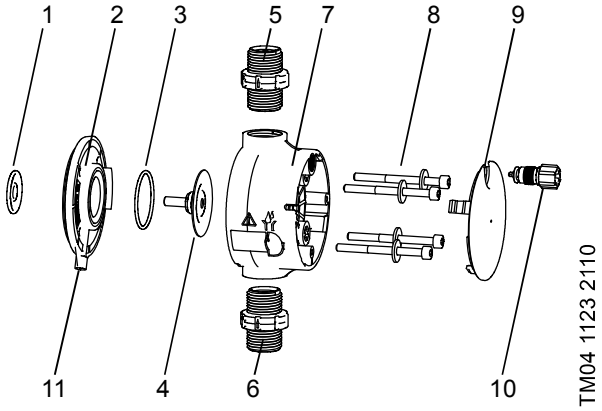

Fig. 41 Changing the diaphragm and valves

1	Safety diaphragm
2	Flange
3	O-ring
4	Diaphragm
5	Valve on discharge side
6	Valve on suction side
7	Dosing head
8	Screws with discs
9	Cover
10	Deaeration valve
11	Drain opening

7.4.2 Dismantling the diaphragm and valves

Warning

Danger of explosion, if dosing liquid has entered the pump housing!

If the diaphragm is possibly damaged, don't connect the pump to the power supply! Proceed as described in section *7.6 Diaphragm breakage*!

This section refers to fig. 41.

1. Make system pressureless.
2. Empty dosing head before maintenance and flush it if necessary.
3. Set pump to "Stop" ■ operating state using the [Start/stop] key.
4. Press the [Start/stop] and [100%] keys at the same time to put the diaphragm into "out" position.
   – Symbol (– must be displayed (see fig. 14).
5. Take suitable steps to ensure that the returning liquid is safely collected.
6. Dismantle suction, pressure and deaeration hose.
7. Dismantle valves on suction and discharge side (5, 6).
8. Remove the cover (9).
9. Loosen screws (8) on the dosing head (7) and remove with discs.
10. Remove the dosing head (7).
11. Unscrew diaphragm (4) counter-clockwise and remove with flange (2).
12. Make sure the drain opening (11) is not blocked or soiled. Clean if necessary.
13. Check the safety diaphragm (1) for wear and damage. Replace if necessary.

If nothing indicates that dosing liquid has entered the pump housing, go on as described in section *7.4.3 Reassembling the diaphragm and valves*. Otherwise proceed as described in section *7.6.2 Dosing liquid in the pump housing*.

7.4.3 Reassembling the diaphragm and valves

The pump must only be reassembled, if nothing indicates that dosing liquid has entered the pump housing. Otherwise proceed as described in section *7.6.2 Dosing liquid in the pump housing*.

This section refers to fig. 41.

1. Attach flange (2) correctly and screw on new diaphragm (4) clockwise.
   – Make sure that the O-ring (3) is seated correctly!
2. Press the [Start/stop] and [100%] keys at the same time to put the diaphragm into "in" position.
   – Symbol)– must be displayed (see fig. 14).
3. Attach the dosing head (7).
4. Install screws with discs (8) and cross-tighten with a torque wrench.
   – Torque: 4 Nm.
5. Attach the cover (9).
6. Install new valves (5, 6).
   – Do not interchange valves and pay attention to direction of arrow.
7. Connect suction, pressure and deaeration hose (see section *4.2 Hydraulic connection*)
8. Press the [Start/stop] key to leave the service mode.

Caution

Tighten the dosing head screws with a torque wrench once before commissioning and again after 2-5 operating hours at 4 Nm.

9. Deaerate dosing pump (see section *5.2 Deaerating the pump*).
10. Please observe the notes on commissioning in section *5. Startup*!

7.5 Resetting the service system

After performing the service, the service system must be reset using the "Info > Reset service system" function.

7.6 Diaphragm breakage

If the diaphragm leaks or is broken, dosing liquid escapes from the drain opening (fig. 41, pos. 11) on the dosing head.

In case of diaphragm breakage, the safety diaphragm (fig. 41, pos. 1) protects the pump housing against ingress of dosing liquid.

When dosing crystallising liquids the drain opening can be blocked by crystallisation. If the pump is not taken out of operation immediately, a pressure can build up between the diaphragm (fig. 41, pos. 4) and the safety diaphragm in the flange (fig. 41, pos. 2). The pressure can press dosing liquid through the safety diaphragm into the pump housing.

Most dosing liquids don't cause any danger when entering the pump housing. However a view liquids can cause a chemical reaction with inner parts of the pump. In the worst case, this reaction can produce explosive gases in the pump housing.

Warning

Danger of explosion, if dosing liquid has entered the pump housing!

Operation with damaged diaphragm can lead to dosing liquid entering the pump housing.

In case of diaphragm breakage, immediately separate the pump from the power supply!

Make sure the pump cannot be put back into operation by accident!

Dismantle the dosing head without connecting the pump to the power supply and make sure no dosing liquid has entered the pump housing. Proceed as described in section *7.6.1 Dismantling in case of diaphragm breakage*.

To avoid any danger resulting from diaphragm breakage, observe the following:

- Perform regular maintenance. See section *7.1 Regular maintenance*.
- Never operate the pump with blocked or soiled drain opening.
  – If the drain opening is blocked or soiled, proceed as described in section *7.6.1 Dismantling in case of diaphragm breakage*.
- Never attach a hose to the drain opening. If a hose is attached to the drain opening, it is impossible to recognise escaping dosing liquid.
- Take suitable precautions to prevent harm to health and damage to property from escaping dosing liquid.
- Never operate the pump with damaged or loose dosing head screws.

7.6.1 Dismantling in case of diaphragm breakage

Warning

Danger of explosion, if dosing liquid has entered the pump housing!

Do not connect the pump to the power supply!

This section refers to fig. 41.

1. Make system pressureless.
2. Empty dosing head before maintenance and flush it if necessary.
3. Take suitable steps to ensure that the returning liquid is safely collected.
4. Dismantle suction, pressure and deaeration hose.
5. Remove the cover (9).
6. Loosen screws (8) on the dosing head (7) and remove with discs.
7. Remove the dosing head (7).
8. Unscrew diaphragm (4) counter-clockwise and remove with flange (2).
9. Make sure the drain opening (11) is not blocked or soiled. Clean if necessary.
10. Check the safety diaphragm (1) for wear and damage. Replace if necessary.

If nothing indicates that dosing liquid has entered the pump housing, go on as described in section *7.4.3 Reassembling the diaphragm and valves*. Otherwise proceed as described in section *7.6.2 Dosing liquid in the pump housing*.

7.6.2 Dosing liquid in the pump housing

Warning

Danger of explosion!

Immediately separate the pump from the power supply!

Make sure the pump cannot be put back into operation by accident!

If dosing liquid has entered the pump housing:

- Send the pump to Grundfos for repair, following the instructions given in section *7.7 Repairs*.
- If a repair isn't economically reasonable, dispose of the pump observing the information in section *9. Disposal*.

7.7 Repairs

Warning

The pump housing must only be opened by personnel authorised by Grundfos!

Repairs must only be carried out by authorised and qualified personnel!

Switch off the pump and disconnect it from the voltage supply before carrying out maintenance work and repairs!

After consulting Grundfos, please send the pump, together with the safety declaration completed by a specialist, to Grundfos. The safety declaration can be found at the end of these instructions. It must be copied, completed and attached to the pump.

The pump must be cleaned prior to dispatch!

Caution If dosing liquid has possibly entered the pump housing, state that explicitly in the safety declaration! Observe section *7.6 Diaphragm breakage*.

If the above requirements are not met, Grundfos may refuse to accept delivery of the pump. The shipping costs will be charged to the sender.

8. Faults



In the event of faults in the dosing pump, a warning or an alarm is triggered.
The corresponding fault symbol flashes in the "Operation" menu, see section *8.1 List of faults*.
The cursor jumps to the "Alarm" main menu symbol. Press the click wheel to open the "Alarm" menu and, where necessary, faults to be acknowledged will be acknowledged.

A yellow display indicates a warning and the pump continues running.

A red display indicates an alarm and the pump is stopped.

The last 10 faults are stored in the "Alarm" main menu. When a new fault occurs, the oldest fault is deleted.

The two most recent faults are shown in the display, you can scroll through all the other faults. The time and cause of the fault are displayed.

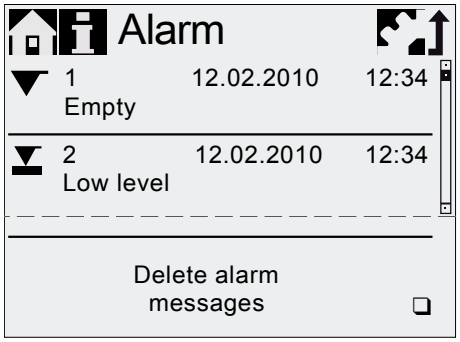

TM04 1109 1010

The list of faults can be deleted at the end of the list.

If there is a service requirement, this appears when the "Alarm" menu is opened. Press the click wheel to temporarily close the service prompt (see section *7.3 Service system*).

8.1 List of faults

8.1.1 Faults with error message

Display in the "Alarm" menu	Possible cause	Possible remedy
▼ Empty (Alarm)	• Dosing medium tank empty	• Fill tank. • Check contact setting (NO/NC).
⧗ Low level (Warning)	• Dosing medium tank almost empty	
Overpressure (Alarm)	• Discharge valve blocked • Isolating valve in discharge line closed • Pressure peaks due to high viscosity • Max. pressure set too low (see section *6.8 Pressure monitoring*)	• Replace valve if necessary (see section *7.4 Perform service*). • Check flow direction of valves (arrow) and correct if necessary. • Open the isolating valve (on the discharge side). • Enlarge diameter of discharge line. • Change pressure setting (see section *6.8 Pressure monitoring*).
Low backpressure (Warning/alarm*)	• Faulty diaphragm • Broken discharge line • Pressure differential between suction and discharge side too low • Leakage in the pressure loading valve at Q < 1 l/h • Deaeration valve open	• Change the diaphragm (see section *7.4 Perform service*). • Check discharge line and repair if necessary. • Install additional spring-loaded valve (approx. 3 bar) on the discharge side. • Close the deaeration valve.
Air bubble (Warning)	• Broken/leaky suction line • Strongly degassing medium • Tank dosing medium empty	• Check suction line and repair if necessary. • Provide positive inlet pressure (place dosing medium tank above the pump). • Enable "SlowMode" (see section *6.6 SlowMode*). • Fill tank.
👁 Cavitation (Warning)	• Blocked/constricted/squeezed suction line • Blocked/constricted suction valve • Suction lift too high • Viscosity too high	• Enable "SlowMode" (see section *6.6 SlowMode*). • Reduce suction lift. • Increase suction hose diameter. • Check suction line and open isolating valve if necessary.
Suct. valve leak (Warning)	• Leaky/dirty suction valve • Deaeration valve open	• Check valve and tighten it up. • Flush system. • Replace valve if necessary (see section *7.4 Perform service*). • Check O-ring position. • Install filter in suction line. • Close the deaeration valve.
Disch. valve leak (Warning)	• Leaky/dirty discharge valve • Leakage in the pressure loading valve • Deaeration valve open	• Check valve and tighten it up. • Flush system. • Replace valve if necessary (see section *7.4 Perform service*). • Check O-ring position. • Install screen in suction line. • Close the deaeration valve. • Install spring-loaded valve on the discharge side.
Flow deviation (Warning)	• Considerable deviation between target and actual flow • Pump not or incorrectly calibrated	• Check installation. • Calibrate the pump (see section *5.3 Calibrating the pump*).

Display in the "Alarm" menu	Possible cause	Possible remedy
Pressure sensor (Warning)	• Broken "FlowControl" cable (see fig. 11) • Sensor defect • Pressure sensor not correctly calibrated.	• Check plug connection. • Change sensor if necessary. • Calibrate pressure sensor correctly (see section *6.8.2 Calibration of pressure sensor*).
Motor blocked (Alarm)	• Backpressure greater than nominal pressure • Damage to gears	• Reduce backpressure. • Arrange for repair of gears, if necessary.
BUS Bus error (Alarm)	• Fieldbus communication error	• Check cables for correct specification and damage; replace if necessary. • Check cable routing and shielding; correct if necessary.
E-Box (Alarm)	• E-Box connection error • Faulty E-Box	• Check plug connection. • Replace E-Box if necessary.
Cable break (Alarm)	• Defect in analog cable 4-20 mA (input current < 2 mA)	• Check cable/plug connections and replace, if necessary. • Check signal transmitter.
Service now (Warning)	• Time interval for service expired	• Perform service (see section *7.4 Perform service*).

* Depending on setting

8.1.2 General faults

Fault	Possible cause	Possible remedy
Dosing flow too high	Inlet pressure greater than backpressure	Install additional spring-loaded valve (approx. 3 bar) on the discharge side.
		Increase pressure differential.
	Incorrect calibration	Calibrate the pump (see section *5.3 Calibrating the pump*).
No dosing flow or dosing flow too low	Air in dosing head	Deaerate the pump.
	Faulty diaphragm	Change the diaphragm (see section *7.4 Perform service*).
	Leakage/fracture in lines	Check and repair lines.
	Valves leaking or blocked	Check and clean valves.
	Valves installed incorrectly	Check that the arrow on the valve housing is pointing in the direction of flow. Check whether all O-rings are installed correctly.
	Blocked suction line	Clean suction line/install filter.
	Suction lift too high	Reduce suction lift.
		Install priming aid.
		Enable "SlowMode" (see section *6.6 SlowMode*).
	Viscosity too high	Enable "SlowMode" (see section *6.6 SlowMode*).
		Use hose with larger diameter.
		Install spring-loaded valve on the discharge side.
	Faulty calibration	Calibrate the pump (see section *5.3 Calibrating the pump*).
	Deaeration valve open	Close the deaeration valve.
Irregular dosing	Valves leaking or blocked	Tighten up valves, replace valves if necessary (see section *7.4 Perform service*).
	Backpressure fluctuations	Keep backpressure constant.
		Activate "AutoFlowAdapt" (only DDA-FCM).
Liquid escaping from the drain opening on the flange	Faulty diaphragm	Immediately separate the pump from the power supply! Observe section *7. Service* and especially section *7.6 Diaphragm breakage*.
Liquid escaping	Dosing head screws not tightened	Tighten up screws (see section *4.2 Hydraulic connection*).
	Valves not tightened	Tighten up valves/union nuts (see section *4.2 Hydraulic connection*).
Pump not sucking in	Suction lift too high	Reduce suction lift; if necessary, provide positive inlet pressure.
	Backpressure too high	Open the deaeration valve.
	Soiled valves	Flush system, replace valves if necessary (see section *7.4 Perform service*).

9. Disposal



This product or parts of it must be disposed of in an environmentally sound way.
Use appropriate waste collection services.
If this is not possible, contact the nearest Grundfos company or service workshop.

Argentina
Bombas GRUNDFOS de Argentina S.A.
Ruta Panamericana km. 37.500 Centro Industrial Garin
1619 - Garin Pcia. de B.A.
Phone: +54-3327 414 444
Telefax: +54-3327 411 111

Australia
GRUNDFOS Pumps Pty. Ltd.
P.O. Box 2040
Regency Park
South Australia 5942
Phone: +61-8-8461-4611
Telefax: +61-8-8340 0155

Austria
GRUNDFOS Pumpen Vertrieb Ges.m.b.H.
Grundfosstraße 2
A-5082 Grödig/Salzburg
Tel.: +43-6246-883-0
Telefax: +43-6246-883-30

Belgium
N.V. GRUNDFOS Bellux S.A.
Boomsesteenweg 81-83
B-2630 Aartselaar
Tél.: +32-3-870 7300
Télécopie: +32-3-870 7301

Belarus
Представительство ГРУНДФОС в Минске
220125, Минск
ул. Шафарнянская, 11, оф. 56
Тел.: +7 (375 17) 286 39 72, 286 39 73
Факс: +7 (375 17) 286 39 71
E-mail: minsk@grundfos.com

Bosnia/Herzegovina
GRUNDFOS Sarajevo
Trg Heroja 16,
BiH-71000 Sarajevo
Phone: +387 33 713 290
Telefax: +387 33 659 079
e-mail: grundfos@bih.net.ba

Brazil
BOMBAS GRUNDFOS DO BRASIL
Av. Humberto de Alencar Castelo Branco, 630
CEP 09850 - 300
São Bernardo do Campo - SP
Phone: +55-11 4393 5533
Telefax: +55-11 4343 5015

Bulgaria
Grundfos Bulgaria EOOD
Slatina District
Iztochna Tangenta street no. 100
BG - 1592 Sofia
Tel. +359 2 49 22 200
Fax. +359 2 49 22 201
email: bulgaria@grundfos.bg

Canada
GRUNDFOS Canada Inc.
2941 Brighton Road
Oakville, Ontario
L6H 6C9
Phone: +1-905 829 9533
Telefax: +1-905 829 9512

China
Grundfos Alldos
Dosing & Disinfection
ALLDOS (Shanghai) Water Technology Co. Ltd.
West Unit, 1 Floor, No. 2 Building (T 4-2)
278 Jinhu Road, Jin Qiao Export Processing Zone
Pudong New Area
Shanghai, 201206
Phone: +86 21 5055 1012
Telefax: +86 21 5032 0596
E-mail: grundfosalldos-CN@grundfos.com

China
GRUNDFOS Pumps (Shanghai) Co. Ltd.
10F The Hub, No. 33 Suhong Road
Minhang District
Shanghai 201106
PRC
Phone: +86-21 6122 5222
Telefax: +86-21 6122 5333

Croatia
GRUNDFOS CROATIA d.o.o.
Cebini 37, Buzin
HR-10010 Zagreb
Phone: +385 1 6595 400
Telefax: +385 1 6595 499
www.hr.grundfos.com

Czech Republic
GRUNDFOS s.r.o.
Čapkovského 21
779 00 Olomouc
Phone: +420-585-716 111
Telefax: +420-585-716 299

Denmark
GRUNDFOS DK A/S
Martin Bachs Vej 3
DK-8850 Bjerringbro
Tlf.: +45-87 50 50 50
Telefax: +45-87 50 51 51
E-mail: info_GDK@grundfos.com
www.grundfos.com/DK

Estonia
GRUNDFOS Pumps Eesti OÜ
Peterburi tee 92G
11415 Tallinn
Tel: + 372 606 1690
Fax: + 372 606 1691

Finland
OY GRUNDFOS Pumput AB
Trukkikuja 1
FI-01360 Vantaa
Phone: +358-(0)207 889 500
Telefax: +358-(0)207 889 550

France
Pompes GRUNDFOS Distribution S.A.
Parc d'Activités de Chesnes
57, rue de Malacombe
F-38290 St. Quentin Fallavier (Lyon)
Tél.: +33-4 74 82 15 15
Télécopie: +33-4 74 94 10 51

Germany
GRUNDFOS Water Treatment GmbH
Reetzstraße 85
D-76327 Pfinztal (Söllingen)
Tel.: +49 7240 61-0
Telefax: +49 7240 61-177
E-mail: gwt@grundfos.com

Germany
GRUNDFOS GMBH
Schlüterstr. 33
40699 Erkrath
Tel.: +49-(0) 211 929 69-0
Telefax: +49-(0) 211 929 69-3799
E-mail: infoservice@grundfos.de
Service in Deutschland:
E-mail: kundendienst@grundfos.de

Greece
GRUNDFOS Hellas A.E.B.E.
20th km. Athinon-Markopoulou Av.
P.O. Box 71
GR-19002 Peania
Phone: +0030-210-66 83 400
Telefax: +0030-210-66 46 273

Hong Kong
GRUNDFOS Pumps (Hong Kong) Ltd.
Unit 1, Ground floor
Siu Wai Industrial Centre
29-33 Wing Hong Street &
68 King Lam Street, Cheung Sha Wan
Kowloon
Phone: +852-27861706 / 27861741
Telefax: +852-27858664

Hungary
GRUNDFOS Hungária Kft.
Park u. 8
H-2045 Törökbálint,
Phone: +36-23 511 110
Telefax: +36-23 511 111

India
GRUNDFOS Pumps India Private Limited
118 Old Mahabalipuram Road
Thoraipakkam
Chennai 600 097
Phone: +91-44 4596 6800

Indonesia
PT. GRUNDFOS POMPA
Graha Intirub Lt. 2 & 3
Jln. Cililitan Besar No.454. Makasar,
Jakarta Timur
ID-Jakarta 13650
Phone: +62 21-469-51900
Telefax: +62 21-460 6910 / 460 6901

Ireland
GRUNDFOS (Ireland) Ltd.
Unit A, Merrywell Business Park
Ballymount Road Lower
Dublin 12
Phone: +353-1-4089 800
Telefax: +353-1-4089 830

Italy
GRUNDFOS Pompe Italia S.r.l.
Via Gran Sasso 4
I-20060 Truccazzano (Milano)
Tel.: +39-02-95838112
Telefax: +39-02-95309290 / 95838461

Japan
GRUNDFOS Pumps K.K.
Gotanda Metalion Bldg. 5F,
5-21-15, Higashi-gotanda
Shiagawa-ku, Tokyo,
141-0022 Japan
Phone: +81 35 448 1391
Telefax: +81 35 448 9619

Korea
GRUNDFOS Pumps Korea Ltd.
6th Floor, Aju Building 679-5
Yeoksam-dong, Kangnam-ku, 135-916
Seoul, Korea
Phone: +82-2-5317 600
Telefax: +82-2-5633 725

Latvia
SIA GRUNDFOS Pumps Latvia
Deglava biznesa centrs
Augusta Deglava ielā 60, LV-1035, Rīga,
Tālr.: + 371 714 9640, 7 149 641
Fakss: + 371 914 9646

Lithuania
GRUNDFOS Pumps UAB
Smolensko g. 6
LT-03201 Vilnius
Tel: + 370 52 395 430
Fax: + 370 52 395 431

Malaysia
GRUNDFOS Pumps Sdn. Bhd.
7 Jalan Peguam U1/25
Glenmarie Industrial Park
40150 Shah Alam
Selangor
Phone: +60-3-5569 2922
Telefax: +60-3-5569 2866

Mexico
Bombas GRUNDFOS de México S.A. de C.V.
Boulevard TLC No. 15
Parque Industrial Stiva Aeropuerto
Apodaca, N.L. 66600
Phone: +52-81-8144 4000
Telefax: +52-81-8144 4010

Netherlands
GRUNDFOS Netherlands
Veluwezoom 35
1326 AE Almere
Postbus 22015
1302 CA ALMERE
Tel.: +31-88-478 6336
Telefax: +31-88-478 6332
E-mail: info_gnl@grundfos.com

New Zealand
GRUNDFOS Pumps NZ Ltd.
17 Beatrice Tinsley Crescent
North Harbour Industrial Estate
Albany, Auckland
Phone: +64-9-415 3240
Telefax: +64-9-415 3250

Norway
GRUNDFOS Pumper A/S
Strømsveien 344
Postboks 235, Leirdal
N-1011 Oslo
Tlf.: +47-22 90 47 00
Telefax: +47-22 32 21 50

Poland
GRUNDFOS Pompy Sp. z o.o.
ul. Klonowa 23
Baranowo k. Poznania
PL-62-081 Przeźmierowo
Tel: (+48-61) 650 13 00
Fax: (+48-61) 650 13 50

Portugal
Bombas GRUNDFOS Portugal, S.A.
Rua Calvet de Magalhães, 241
Apartado 1079
P-2770-153 Paço de Arcos
Tel.: +351-21-440 76 00
Telefax: +351-21-440 76 90

Romania
GRUNDFOS Pompe România SRL
Bd. Biruintei, nr 103
Pantelimon county Ilfov
Phone: +40 21 200 4100
Telefax: +40 21 200 4101
E-mail: romania@grundfos.ro

Russia
ООО Грундфос
Россия, 109544 Москва, ул. Школьная 39
Тел. (+7) 495 737 30 00, 564 88 00
Факс (+7) 495 737 75 36, 564 88 11
E-mail grundfos.moscow@grundfos.com

Serbia
GRUNDFOS Predstavništvo Beograd
Dr. Milutina Ivkovića 2a/29
YU-11000 Beograd
Phone: +381 11 26 47 877 / 11 26 47 496
Telefax: +381 11 26 48 340

Singapore
GRUNDFOS (Singapore) Pte. Ltd.
25 Jalan Tukang
Singapore 619264
Phone: +65-6681 9688
Telefax: +65-6681 9689

Slovakia
GRUNDFOS s.r.o.
Prievozská 4D
821 09 BRATISLAVA
Phona: +421 2 5020 1426
sk.grundfos.com

Slovenia
GRUNDFOS LJUBLJANA, d.o.o.
Leskoškova 9e, 1122 Ljubljana
Phone: +386 (0) 1 568 06 10
Telefax: +386 (0)1 568 0619
E-mail: tehnika-si@grundfos.com

South Africa
Grundfos (PTY) Ltd.
Corner Mountjoy and George Allen Roads
Wilbart Ext. 2
Bedfordview 2008
Phone: (+27) 11 579 4800
Fax: (+27) 11 455 6066
E-mail: lsmart@grundfos.com

Spain
Bombas GRUNDFOS España S.A.
Camino de la Fuentecilla, s/n
E-28110 Algete (Madrid)
Tel.: +34-91-848 8800
Telefax: +34-91-628 0465

Sweden
GRUNDFOS AB
(Box 333) Lunnagårdsgatan 6
431 24 Mölndal
Tel.: +46 31 332 23 000
Telefax: +46 31-331 94 60

Switzerland
GRUNDFOS ALLDOS International AG
Schönmattstraße 4
CH-4153 Reinach
Tel.: +41-61-717 5555
Telefax: +41-61-717 5500
E-mail:
grundfosalldos-CH@grundfos.com

Switzerland
GRUNDFOS Pumpen AG
Bruggacherstrasse 10
CH-8117 Fällanden/ZH
Tel.: +41-44-806 8111
Telefax: +41-44-806 8115

Taiwan
GRUNDFOS Pumps (Taiwan) Ltd.
7 Floor, 219 Min-Chuan Road
Taichung, Taiwan, R.O.C.
Phone: +886-4-2305 0868
Telefax: +886-4-2305 0878

Thailand
GRUNDFOS (Thailand) Ltd.
92 Chaloem Phrakiat Rama 9 Road,
Dokmai, Pravej, Bangkok 10250
Phone: +66-2-725 8999
Telefax: +66-2-725 8998

Turkey
GRUNDFOS POMPA San. ve Tic. Ltd. Sti.
Gebze Organize Sanayi Bölgesi
Ihsan dede Caddesi,
2. yol 200. Sokak No. 204
41490 Gebze/ Kocaeli
Phone: +90 - 262-679 7979
Telefax: +90 - 262-679 7905
E-mail: satis@grundfos.com

Ukraine
Бізнес Центр Європа
Столичне шосе, 103
м. Київ, 03131, Україна
Телефон: (+38 044) 237 04 00
Факс.: (+38 044) 237 04 01
E-mail: ukraine@grundfos.com

United Arab Emirates
GRUNDFOS Gulf Distribution
P.O. Box 16768
Jebel Ali Free Zone
Dubai
Phone: +971-4- 8815 166
Telefax: +971-4-8815 136

United Kingdom
GRUNDFOS Pumps Ltd.
Grovebury Road
Leighton Buzzard/Beds. LU7 4TL
Phone: +44-1525-850000
Telefax: +44-1525-850011

U.S.A.
GRUNDFOS Pumps Corporation
17100 West 118th Terrace
Olathe, Kansas 66061
Phone: +1-913-227-3400
Telefax: +1-913-227-3500

Uzbekistan
Grundfos Tashkent, Uzbekistan The Representative Office of Grundfos Kazakhstan in Uzbekistan
38a, Oybek street, Tashkent
Телефон: (+998) 71 150 3290 / 71 150 3291
Факс: (+998) 71 150 3292

Addresses revised 25.01.2016

© Copyright Grundfos Holding A/S

The name Grundfos, the Grundfos logo, and **be think innovate** are registered trademarks owned by Grundfos Holding A/S or Grundfos A/S, Denmark. All rights reserved worldwide.

95724708 0516

ECM: 1183454

Section 3.4.3

Chemical Dosing Guide

As per influent samples taken on August 25th (Report 25129-2526) t, the plant's inlet parameters are exceeding design specifications putting the system under significant stress. Influent loading is not consentient, so it's difficult to have standard dosing setpoints or control logic. Due to fluctuation of influent parameter, there is a risk of chemical over-dosing.

In the meantime, we're basing nutrient dosing on flow-paced (system adjust automatically based on flow rate) control using the following assumed influent quality:

- BOD: 320 mg/L
- $N–NH_3$: 35 mg/L
- TP: 10 mg/L

General approach

- The plant is designed to achieve treatment with minimal chemicals at full design flow. At maximum flow, nutrients should not be required; only antifoam, alkalinity, and polymer are expected.
- At flows below design, nutrient dosing pumps will run flow-paced to prevent starvation while staying within acceptable loading limits.

DESIGN PARAMETER	UNITS	VALUE
Design Wastewater Flow	m^3/day	9.45
Maximum Design Wastewater Flow	m^3/day	13.5
Peak Design Wastewater (max day)	m^3/day	18.9
Minimum Design Wastewater Flow	m^3/day	1.8
Winter Influent Design Temperature	°C	7
Summer Influent Design Temperature	°C	20
Peak Hour Flow	m^3/day	28

Table 1: Design Flowrate

Full-flow operation (expected chemicals on)

1. Alkalinity
    - Demand: 7.14 mg/L per 1 mg/L $N–NH_3$ nitrified.
    - Effluent target: ≥ 75 mg/L alkalinity for stable performance.
    - Because current alkalinity is unknown, pump capacity has been sized conservatively (worst-case: zero influent alkalinity, to ensure quick response).
    - Control logic: Maintain pH 7.0–7.5. alkalinity dosing pump runs only when outside this range; stops within range. Alarm at pH < 6.5 (LL) or pH > 8.2 (HH). (To be validated on site against effluent alkalinity to confirm ≥ 75 mg/L).
2. Antifoam
    - Flow-paced at minimum effective rate (~5 mg/L) to manage foam.
3. Polymer (dewatering)
    - Initial dose: 25 mg/L.
    - Jar testing with the chemical vendor is required to optimize dose and polymer selection.

Current reduced-flow strategy (avoid biomass starvation; target 100: 5:1 (100 mg/L BOD: 5 mg/L Nitrogen: 1 mg/L phosphorus), without exceeding plant acceptable maximum load):
Carbon source (The dosing is directly proportional to the flow rate):

- ≤ 1.8 m^3/d ➔ 0.576 kg/d (alarm if < 1.8 m^3/d for more than 12 hrs).
- 9.2 m^3/d ➔ 2.94 kg/d.
- 18.9 m^3/d➔ 0 kg/d (no dosing required).

Nitrogen source:

- < 9.2 m^3/d: constant consumption ➔ 0.3024 kg/d
- 9.2 to < 14 m^3/d: ramp-down linearly from 0.3024 → 0 kg/d
- 14 to 18.9 m^3/d: ramp-down linearly from 0.268 → 0 kg/d

Control note: Nutrient dosing pumps activate after 2 hours of sustained sub-design flow to prevent false “no dosing” scenario. Antifoam and polymer are unaffected by these flow-based nutrient adjustments.

Section 3.4.4

Safety Data Sheets

Section 3.4.4.1

Industrial Defoamer

SLS CHEMICAL INC.

SAFETY DATA SHEET
SLS 825

1. CHEMICAL PRODUCT AND COMPANY IDENTIFICATION

PRODUCT NAME : SLS 825	
APPLICATION : Industrial Defoamer	
COMPANY IDENTIFICATION : SLS Chemical Inc. 8830 19 Ave. SW Edmonton, AB T6X 1X6 1 (833) 757-2436	Emergency Contact **CANUTEC: 1-613-996-6666** **SLS Chemical Inc. 1 (833) 757-2436**

NFPA 704M/HMIS RATING
HEALTH : 0 / 1 FLAMMABILITY : 1 / 1 REACTIVITY : 0 / 0 OTHER :
0 = Insignificant 1 = Slight 2 = Moderate 3 = High 4 = Extreme

2. HAZARDS IDENTIFICATION

EMERGENCY OVERVIEW: Material can create slippery conditions.

REMARKS: This product is a mixture. Health hazard information is based on its components.

EMERGENCY OVERVIEW: Repeated or prolonged exposure may cause slight irritation of eyes and skin.

INHALATION: Prolonged or excessive inhalation may cause coughing or sneezing. May cause irritation of respiratory tract.

INGESTION: Low acute oral toxicity.

CHRONIC EXPOSURE: No known carcinogenic or other chronic effects.

3. COMPOSITION/INFORMATION ON INGREDIENTS

CHEMICAL CHARACTERIZATION
Water based fatty-alcohol dispersion.

HAZARDOUS OR REGULATED COMPONENTS
Not applicable

FURTHER INFORMATION
This product contains no WHMIS regulated (hazardous) components above WHMIS Concentration (disclosure) Thresholds..

4. FIRST AID MEASURES

EYE CONTACT :
Flush affected area with water. If symptoms develop, seek medical advice.

SKIN CONTACT :
Immediately wash with plenty of soap and water. If symptoms develop, seek medical advice.

INGESTION :
Do not induce vomiting without medical advice. If conscious, washout mouth and give water to drink. Get medical attention.

INHALATION :
Remove to fresh air, treat symptomatically. Get medical attention.

NOTE TO PHYSICIAN :
Based on the individual reactions of the patient, the physician's judgement should be used to control symptoms and clinical condition.

5. FIRE FIGHTING MEASURES

SUITABLE EXTINGUISHING MEDIA
Use water spray, alcohol-resistant foam, dry chemical or carbon dioxide.

EXTINGUISHING MEDIA WHICH SHALL NOT BE USED FOR SAFETY REASONS:
None

Specific Hazards During Firefighting
This material will not burn until water has evaporated. In case of fire hazardous decomposition products may be produced such as:
Carbon oxides (COx), Hydrocarbons, Smoke, Fumes

SPECIAL PROTECTIVE EQUIPMENT FOR FIREFIGHTERS
Wear full protective clothing and self-contained breathing apparatus.

SPECIFIC METHODS
In the event of fire, cool tanks with water spray. Use extinguishing measures that are appropriate to local circumstances and the surrounding environment.
Fire residues and contaminated fire extinguishing water must be disposed of in accordance with local regulations.

6. ACCIDENTAL RELEASE MEASURES

PERSONAL PRECAUTIONS :
Do not touch spilled material. Restrict access to area as appropriate until clean-up operations are complete. Use personal protective equipment recommended in Section 8 (Exposure Controls/Personal Protection). Stop or reduce any leaks if it is safe to do so. Ventilate spill area if possible. Remove sources of ignition.

METHODS FOR CLEANING UP :

SMALL SPILLS: Soak up spill with absorbent material. Place residues in a suitable, covered, properly labeled container. Wash affected area.

LARGE SPILLS: Contain liquid using absorbent material, by digging trenches or by diking. Reclaim into recovery or salvage drums or tank truck for proper disposal. Clean contaminated surfaces with water or aqueous cleaning agents. Contact an approved waste hauler for disposal of contaminated recovered material. Dispose of material in compliance with regulations indicated in Section 13 (Disposal Considerations).

ENVIRONMENTAL PRECAUTIONS :
Do not contaminate surface water. See Sections 7 and 8 for proper handling and protective measures and Section 13 for proper waste
disposal measures.

7. HANDLING AND STORAGE

HANDLING :
Do not get in eyes, on skin, on clothing. Do not breathe vapors/gases/dust. Use with adequate ventilation. Keep the containers closed when not in use. Do not take internally. Ensure all containers are labelled. Have emergency equipment (for fires, spills, leaks, etc.) readily available.

STORAGE CONDITIONS :
Keep container tightly closed. Store at room temperature in the original container. Avoid freezing.
Incompatible products:
Keep away from oxidizing agents and strongly acid or alkaline materials.
Materials to avoid:
Strong oxidizing agents, Strong acids and strong bases.

8. EXPOSURE CONTROLS/PERSONAL PROTECTION

OCCUPATIONAL EXPOSURE LIMITS :
This product does not contain any substance that has an established exposure limit.

Handle in accordance with good industrial hygiene and safety practice. Ensure that eyewash stations and safety showers are close to the workstation location. Ensure adequate ventilation. Ensure adequate ventilation. Ensure that eyewash stations and safety showers are close to the workstation location.

ENGINEERING MEASURES :
General ventilation is recommended.

RESPIRATORY PROTECTION :
Respiratory protection is not normally needed.

HAND PROTECTION :
Nitrile gloves, PVC gloves, Viton# gloves

SKIN PROTECTION :
Wear standard protective clothing.

EYE PROTECTION :
Wear chemical splash goggles.

HYGIENE RECOMMENDATIONS :
Keep an eye wash fountain available. Keep a safety shower available. If clothing is contaminated, remove clothing and thoroughly wash the affected area. Launder contaminated clothing before reuse.

9. PHYSICAL AND CHEMICAL PROPERTIES

PHYSICAL STATE	Liquid, aqueous dispersion
APPEARANCE	Opaque white or Off-white
ODOR	Not significant
SPECIFIC GRAVITY	0.98
SOLUBILITY IN WATER	Complete
pH (100 %)	7.0 – 8.0 in water
VISCOSITY	420 cps @ 22 °C
BOILING POINT	>100 °C
FREEZING POINT	0 C

10. STABILITY AND REACTIVITY

STABILITY :
Stable under normal conditions.

HAZARDOUS POLYMERIZATION :
Hazardous polymerization will not occur.

CONDITIONS TO AVOID :
None known.

MATERIALS TO AVOID :
Contact with strong oxidizers (e.g. chlorine, peroxides, chromates, nitric acid, perchlorate, concentrated oxygen, permanganate) may generate heat, fires, explosions and/or toxic vapors.

HAZARDOUS DECOMPOSITION PRODUCTS :

No decomposition if stored normally
Under fire conditions: Oxides of carbon, Oxides of nitrogen, Carbon monoxide, carbon dioxide, ammonia.

11. TOXICOLOGICAL INFORMATION

ACUTE TOXICITY
Based on available data, the classification criteria are not met.

IRRITATION AND CORROSION
Skin: Calculation method:
Based on available data, the classification criteria are not met.
Eyes: Calculation method:
Based on available data, the classification criteria are not met.

SENSITIZATION
Calculation method
Based on available data, the classification criteria are not met.

LONG TERM TOXICITY
Carcinogenicity
Based on available data, the classification criteria are not met.
Mutagenicity
Remarks: No data available
No known effect.
Based on available data, the classification criteria are not met.

HUMAN HAZARD CHARACTERIZATION :
Based on our hazard characterization, the potential human hazard is: Low

12. ECOLOGICAL INFORMATION

ECOTOXICOLOGICAL EFFECTS
Aquatic toxicity
LC50/96 h/Oncorhynchus mykiss (rainbow trout)/Acute aquatic toxicity: ca. 3,500 mg/l
LC50/48 h/Daphnia magna (Water flea)/Acute aquatic toxicity: ca. 1,400 mg/l

Remarks: The data is based on the toxicological properties of individual components of the product.
Not harmful to aquatic organisms.
Toxicity to other organisms

MOBILITY
Vapour pressure: 23 hPa (20 °C)
Water solubility: dispersible
Surface tension: not determined

No data available

PERSISTENCE AND DEGRADABILITY
Biological degradability:
The data is based on the toxicological properties of individual components of the product. Inherently biodegradable. Product is not persistent.

BIOACCUMULATIVE POTENTIAL
The product is not expected to bioaccumulate.
Partition coefficient: n-octanol/water: not determined

OTHER ADVERSE EFFECTS
Adsorbed organic bound halogens (AOX):
Remarks: Product does not contain any organic halogens.
None known.
Additional ecological information: This product has no known ecotoxicological effects
.

13. DISPOSAL CONSIDERATIONS

Local and national regulations should be followed.

Dispose of wastes in an approved incinerator or waste treatment/disposal site, in accordance with all applicable regulations. Do not dispose of wastes in local sewer or with normal garbage.

14. TRANSPORT INFORMATION

The information in this section is for reference only and should not take the place of a shipping paper (bill of lading) specific to an order. Please note that the proper Shipping Name / Hazard Class may vary by packaging, properties, and mode of transportation. Typical Proper Shipping Names for this product are:

PRODUCT IS NOT REGULATED DURING TRANSPORTATION ON AIR:SEA:LAND

15. REGULATORY INFORMATION

NATIONAL REGULATIONS, CANADA and USA:

WORKPLACE HAZARDOUS MATERIALS INFORMATION SYSTEM (WHMIS) :
This product has been classified in accordance with the hazard criteria of the Controlled Products Regulations (CPR) and the MSDS contains all the information required by the CPR.

WHMIS CLASSIFICATION :
Not considered a WHMIS controlled product.

CANADIAN ENVIRONMENTAL PROTECTION ACT (CEPA) :
The substances in this preparation are listed on the Domestic Substances List (DSL), are exempt, or have been reported in accordance with the New Substances Notification Regulations.

NOTIFICATION STATUS

- All components of this product are included in the United States TSCA Chemical Inventory or are not required to be listed on the United States TSCA Chemical Inventory.
- This product's Australian Inventory of Chemical Substances (AICS) status has not been determined.
- All components of this product are included in the Canada Domestic Substance List (DSL) or are not required to be listed on the Canada Domestic Substance List (DSL).
- All components of this product are included on the Chinese inventory or are not required to be listed on the Chinese inventory.
- All components of this product are included in the European Inventory of Existing Chemical Substances (EINECS) or are not required to be listed on EINECS.
- All components of this product are included on the Japanese (ENCS) inventory or are not required to be listed on the Japanese (ENCS) inventory.
- All components of this product are included in the Korean (ECL) inventory or are not required to be listed on the Korean (ECL) inventory.
- This product's New Zealand Inventory of Chemical Substances (NZIoC) status has NOT been determined.
- This product's Philippine (PICCS) inventory status has NOT been determined.

16. OTHER INFORMATION

The information hereby provided is based on the supplier’s knowledge at the time of issuing the data. It is provided for information only and does not amount to a guarantee and therefore no legal responsibility or liability will be accepted.

Prepared By : SLS Chemical Inc.
Date issued : January. 1, 2021
Replaces : January 1, 2019

Section 3.4.4.2

Flocculation/Dewatering

SLS CHEMICAL INC.

SAFETY DATA SHEET
SLS 31560

1. CHEMICAL PRODUCT AND COMPANY IDENTIFICATION

PRODUCT NAME : SLS 31560	
APPLICATION : Flocculation/Dewatering	
COMPANY IDENTIFICATION : SLS Chemical Inc. Address 8830 19 Ave. SW Edmonton, AB T6X 1X6 Ph 1 (833) 757 2436	**Emergency Contact 24Hr** **CANUTEC: 1-613-996-6666** **CHEMTREC: 1-800-424-9300** **SLS Chemical Inc 1 (833) 757 2436**

NFPA 704M/HMIS RATING
HEALTH : 0 / 1 FLAMMABILITY : 1 / 1 REACTIVITY : 0 / 0 OTHER :
0 = Insignificant 1 = Slight 2 = Moderate 3 = High 4 = Extreme

2. HAZARDS IDENTIFICATION

CAUTION
May cause irritation with prolonged contact. Toxic to aquatic organisms.
Do not get in eyes, on skin, on clothing. Use with adequate ventilation. Do not take internally. In case of contact with eyes, rinse immediately with plenty of water and seek medical advice. After contact with skin, wash immediately with plenty of soap and water. Water in contact with the product will cause slippery floor conditions. Wear suitable protective clothing, gloves and eye/face protection.
Low Fire Hazard; liquids may burn upon heating to temperatures at or above the flash point. Water in contact with the product will cause slippery floor conditions. May evolve oxides of carbon (COx) under fire conditions. May evolve oxides of nitrogen (NOx) under fire conditions.

HUMAN HEALTH HAZARDS - ACUTE :

EYE CONTACT :
May cause irritation with prolonged contact.

SKIN CONTACT :
May cause irritation with prolonged contact.

INGESTION :
Not a likely route of exposure. No adverse effects expected.

INHALATION :
Not a likely route of exposure. No adverse effects expected.

AGGRAVATION OF EXISTING CONDITIONS :
Skin contact may aggravate an existing dermatitis condition.

HUMAN HEALTH HAZARDS - CHRONIC :
No adverse effects expected other than those mentioned above.

3. COMPOSITION/INFORMATION ON INGREDIENTS

Based on our hazard evaluation, none of the substances in this product are hazardous.

4. FIRST AID MEASURES

EYE CONTACT :
Flush affected area with water. If symptoms develop, seek medical advice.

SKIN CONTACT :
Immediately wash with plenty of soap and water. If symptoms develop, seek medical advice.

INGESTION :
Do not induce vomiting without medical advice. If conscious, washout mouth and give water to drink. Get medical attention.

INHALATION :
Remove to fresh air, treat symptomatically. Get medical attention.

NOTE TO PHYSICIAN :
Based on the individual reactions of the patient, the physician's judgement should be used to control symptoms and clinical condition.

5. FIRE FIGHTING MEASURES

Flash Point :	> 93 °C (PMCC)
LOWER EXPLOSION LIMIT :	Not flammable
UPPER EXPLOSION LIMIT :	Not flammable

EXTINGUISHING MEDIA :
Carbon dioxide, Foam, Dry powder, Other extinguishing agent suitable for Class B fires, For large fires, use water spray or fog, thoroughly drenching the burning material.
Water mist may be used to cool closed containers.

UNSUITABLE EXTINGUISHING MEDIA :
Do not use water unless flooding amounts are available.

FIRE AND EXPLOSION HAZARD :
Low Fire Hazard; liquids may burn upon heating to temperatures at or above the flash point. Water in contact with the product will cause slippery floor conditions. May evolve oxides of carbon (COx) under fire conditions. May evolve oxides of nitrogen (NOx) under fire conditions.

SPECIAL PROTECTIVE EQUIPMENT FOR FIRE FIGHTING :
In case of fire, wear a full face positive-pressure self contained breathing apparatus and protective suit.

SENSITIVITY TO MECHANICAL IMPACT :
Not expected to be sensitive to mechanical impact.

SENSITIVITY TO STATIC DISCHARGE :
Not expected to be sensitive to static discharge.

6. ACCIDENTAL RELEASE MEASURES

PERSONAL PRECAUTIONS :
Do not touch spilled material. Restrict access to area as appropriate until clean-up operations are complete. Use personal protective equipment recommended in Section 8 (Exposure Controls/Personal Protection). Stop or reduce any leaks if it is safe to do so. Ventilate spill area if possible. Remove sources of ignition.

METHODS FOR CLEANING UP :
SMALL SPILLS: Soak up spill with absorbent material. Place residues in a suitable, covered, properly labeled container. Wash affected area. LARGE SPILLS: Contain liquid using absorbent material, by digging trenches or by diking. Reclaim into recovery or salvage drums or tank truck for proper disposal. Clean contaminated surfaces with water or aqueous cleaning agents. Contact an approved waste hauler for disposal of contaminated recovered material. Dispose of material in compliance with regulations indicated in Section 13 (Disposal Considerations).

ENVIRONMENTAL PRECAUTIONS :
Do not contaminate surface water.

7. HANDLING AND STORAGE

HANDLING :
Do not get in eyes, on skin, on clothing. Do not breathe vapors/gases/dust. Use with adequate ventilation. Keep the containers closed when not in use. Do not take internally. Ensure all containers are labelled. Have emergency equipment (for fires, spills, leaks, etc.) readily available.

STORAGE CONDITIONS :
Store away from heat and sources of ignition. Store separately from oxidizers. Store the containers tightly closed.

8. EXPOSURE CONTROLS/PERSONAL PROTECTION

OCCUPATIONAL EXPOSURE LIMITS :
This product does not contain any substance that has an established exposure limit.

ENGINEERING MEASURES :
General ventilation is recommended.

RESPIRATORY PROTECTION :
Respiratory protection is not normally needed.

HAND PROTECTION :
Nitrile gloves, PVC gloves, Viton# gloves

SKIN PROTECTION :
Wear standard protective clothing.

EYE PROTECTION :
Wear chemical splash goggles.

HYGIENE RECOMMENDATIONS :
Keep an eye wash fountain available. Keep a safety shower available. If clothing is contaminated, remove clothing and thoroughly wash the affected area. Launder contaminated clothing before reuse.

9. PHYSICAL AND CHEMICAL PROPERTIES

PHYSICAL STATE	DRY
APPEARANCE	Opaque white or Off-white
ODOR	Hydrocarbon

SPECIFIC GRAVITY	1.01 - 1.04
SOLUBILITY IN WATER	Partial
pH (100 %)	5.0
VISCOSITY	420 cps @ 22 °C
BOILING POINT	97 °C
VOC CONTENT	22.16 %

10. STABILITY AND REACTIVITY

STABILITY :
Stable under normal conditions.

HAZARDOUS POLYMERIZATION :
Hazardous polymerization will not occur.

CONDITIONS TO AVOID :
None known.

MATERIALS TO AVOID :
Contact with strong oxidizers (e.g. chlorine, peroxides, chromates, nitric acid, perchlorate, concentrated oxygen, permanganate) may generate heat, fires, explosions and/or toxic vapors.

HAZARDOUS DECOMPOSITION PRODUCTS :
Under fire conditions: Oxides of carbon, Oxides of nitrogen, Carbon monoxide, carbon dioxide, ammonia.

11. TOXICOLOGICAL INFORMATION

This is a low toxicity product.

Oral LD 50 (rat) >2000mg/kg.

SENSITIZATION :
This product is not expected to be a sensitizer.

CARCINOGENICITY :
None of the substances in this product are listed as carcinogens by the International Agency for Research on Cancer (IARC), the National Toxicology Program (NTP) or the American Conference of Governmental Industrial Hygienists (ACGIH).

HUMAN HAZARD CHARACTERIZATION :
Based on our hazard characterization, the potential human hazard is: Low

12. ECOLOGICAL INFORMATION

ECOTOXICOLOGICAL EFFECTS

96hr LC 50(fish) >10ppm when tested in pure water.

ENVIRONMENTAL HAZARD AND EXPOSURE CHARACTERIZATION
Based on our hazard characterization, the potential environmental hazard is: Low

13. DISPOSAL CONSIDERATIONS

Local and national regulations should be followed.

Dispose of wastes in an approved incinerator or waste treatment/disposal site, in accordance with all applicable regulations. Do not dispose of wastes in local sewer or with normal garbage.

14. TRANSPORT INFORMATION

The information in this section is for reference only and should not take the place of a shipping paper (bill of lading) specific to an order. Please note that the proper Shipping Name / Hazard Class may vary by packaging, properties, and mode of transportation. Typical Proper Shipping Names for this product are:

PRODUCT IS NOT REGULATED DURING TRANSPORTATION

15. REGULATORY INFORMATION

NATIONAL REGULATIONS, CANADA :

WORKPLACE HAZARDOUS MATERIALS INFORMATION SYSTEM (WHMIS) :
This product has been classified in accordance with the hazard criteria of the Controlled Products Regulations (CPR) and the MSDS contains all the information required by the CPR.

WHMIS CLASSIFICATION :
Not considered a WHMIS controlled product.

CANADIAN ENVIRONMENTAL PROTECTION ACT (CEPA) :
The substances in this preparation are listed on the Domestic Substances List (DSL), are exempt, or have been reported in accordance with the New Substances Notification Regulations.

NATIONAL POLLUTANT RELEASE INVENTORY (NPRI) :
This product does not contain any substances listed in Schedule I of the NPRI at a concentration of one percent or more by weight.

TOXIC SUBSTANCES CONTROL ACT (TSCA) :
The substances in this preparation are included on or exempted from the TSCA 8(b) Inventory (40 CFR 710)

16. OTHER INFORMATION

The information hereby provided is based on the supplier's knowledge at the time of issuing the data. It is provided for information only and does not amount to a guarantee and therefore no legal responsibility or liability will be accepted.

Prepared By : SLS Chemical Inc.
Date Issued : January 19, 2022
Replaces : March 19, 2020

Section 3.4.4.3

Reducing Agent for Biological Processes

SAFETY DATA SHEET

MicroC® 2000

1. PRODUCT AND COMPANY IDENTIFICATION

Product Name:	MicroC® 2000	**Publication Date:**	February 26, 2024
Product Code:	NA	**Replaces:**	October 17, 2023
Product Use:	A reducing agent for biological processes		

Supplier Information:

Environmental Operating Solutions, Inc	Phone:	508-743-8440
53 Portside Drive	Fax:	844-308-5537
Pocasset, MA 02559	Website:	www.microc.com

EMERGENCY TELEPHONE NUMBER: **CHEMTREC** **800-424-9300**

2. HAZARDS IDENTIFICATION

OSHA Regulatory Status:
This product when used as intended is not hazardous according to 29 CFR 1910.1200
This product when used as intended is not hazardous according to GHS categories

GHS Pictograms:	None Applicable
Signal Word:	None Applicable
GHS Hazard Classification:	None Applicable
Hazard Statements:	None Applicable

Note: When vaporized, glycerin mist may cause irritation of the respiratory tract.

Potential Health Effects

Routes of Exposure	Ingestion, inhalation, skin contact, eye contact
Eyes	May cause slight irritation
Skin	May cause slight irritation
Inhalation	High mist concentrations may cause irritation of respiratory tract.
Ingestion	May be harmful if swallowed in large quantities

3. COMPOSITION / INFORMATION ON INGREDIENTS

Chemical Name	CAS #	% by Weight
Glycerin; glycerol	56-81-5	70-74%
Water	7732-18-5	22-26%
Sodium Chloride	7647-14-5	4-6%
Methanol	67-56-1	< 1%

4. FIRST AID MEASURES

Eye Contact	Immediately flush eyes thoroughly with plenty of water for 15 minutes and consult a physician immediately.
Skin Contact	Remove contaminated clothing and wash affected area with water and soap. Consult physician if irritation develops
Inhalation	Remove individual to fresh air. Seek medical attention if breathing problems persist
Ingestion	Do not induce vomiting. Rinse mouth thoroughly. Seek medical attention.
General Advice	If individual feels unwell following the exposure to the product consult a physician immediately. Present this Safety Data Sheet to the doctor in attendance
Note to physician	Treat patient symptomatically

5. FIRE FIGHTING MEASURES

Flammability Summary (OSHA and NFPA)	Non-flammable Material
Protection of Firefighters:	Wear suitable protective equipment. Wear self contained breathing apparatus if necessary
Extinguishing Media	Use equipment appropriate to the main source of the fire. Water spray, alcohol foam, dry chemical or CO2. Water or alcohol foam may cause frothing
Specific hazards arising from the chemical	Carbon oxides

6. ACCIDENTAL RELEASE MEASURES

Personal Protection for Spills	Keep unnecessary personnel away from spill. Use personal protective equipment. Ventilate area of leak or spill. Avoid breathing vapors and mist.
Methods for Containment	Eliminate all sources of ignition. Stop flow of material if safe to do so. Dike spilled material. Absorb spill with inert absorbent material. Sand, earth and vermiculite are suitable absorbent materials.
Environmental Precautions	Prevent further leakage. Contain spill if safe to do so. Do not let product enter storm drains if possible.

7. HANDLING AND STORAGE

Precautions for Safe Handling	See other relevant sections of this SDS. Avoid contact with skin and eyes. Avoid breathing mist. Use with adequate ventilation. Do not handle and store near open flames, high heat or sources of ignition.
Storage	Keep containers closed when not in use. Minimize evaporative losses. Keep away from ignition sources.
Incompatible Materials for Storage	None known

8. EXPOSURE CONTROLS / PERSONAL PROTECTION

INSUFFICIENT DATA ON MIXTURE. DATA ON INDIVIDUAL COMPONENTS PROVIDED BELOW

Component	Concentration in Product	ACGIH TLV	OSHA TABLE Z-1 Limits for Air Contaminants	NIOSH
Glycerin CAS No: 56-81-5	70-74% w/w	Form: Glycerin Mist TWA: 10 mg/m3	Form: Total Dust PEL: 15 mg/m3 Form: Respirable Fraction PEL: 5 mg/m3	Insufficient Data on Glycerin Mist
Methanol CAS No: 67-56-1	< 1 % w/w	TWA: 260 mg/m3	PEL: 260 mg/m3	TWA: 260 mg/m3

Engineering Controls — Use proper equipment and storage conditions to control airborne levels below recommended exposure limits.

Personal Protective Equipment

Eye Protection: — Use normal eye protection practices such as safety glasses with side shields. Use chemical goggles if risk of splashing is high.

Skin Protection — Handle with chemical resistant gloves. Dispose of contaminated gloves after use. Nitrile gloves recommended.

Respiratory Protection — If workers could be exposed to concentrations above the exposure limits in Section 8, use a full face respirator with multipurpose combination cartridges.

9. PHYSICAL AND CHEMICAL PROPERTIES

Physical State	Liquid	**Flash Point**	None to Boil (ASTM D93)
Color	Light brown	**Boiling Point**	Not determined
Odor	Musty – Sweet Odor	**Evaporation Rate**	Not determined
Odor Threshold	Not determined	**UEL/LEL**	Not determined
		Flammability (solid, gas)	Not determined
pH	4.00-11.00	**Vapor Pressure**	Not determined
Solubility in Water	Highly soluble in water	**Vapor Density**	Not determined
		Relative Density	Not Determined
Bulk Density	10.2 lbs/gal	**Partition Coefficient**	Not determined
Specific gravity	1.22@ 20°C	**Autoignition Temperatures**	
		Decomposition	
Viscosity	45 cPs @ 20C	**Temperature**	Not determined

Environmental Operating Solutions, Inc.
53 Portside Drive, Pocasset, MA 02559

10. STABILITY AND REACTIVITY

Reactivity	Avoid contact with oxidizing agents (e.g. nitric acid, peroxides, chromates)
Chemical Stability	Stable under normal storage conditions
Possibility of hazardous reactions	None known
Conditions to Avoid	Heat, flames, sparks. Contact with oxidizing agents
Incompatible Materials	None known
Hazardous Decomposition Products	Oxides of carbon under high heat

11. TOXICOLOGY

INSUFFICIENT DATA ON MIXTURE. DATA ON INDIVIDUAL COMPONENTS PROVIDED BELOW

Eye Contact	The components in this product may result in mild eye irritation from contact with liquid or vapors. Symptoms include redness, swelling, watering.
Skin Contact	The components in this product may result in mild skin irritation. Symptoms include redness, itching, burning, dermatitis.
Inhalation	Breathing high mist concentrations may be harmful. Inhalation can cause irritation of the throat and lungs.
Ingestion	Ingestion of this product may result in nausea, vomiting and diarrhea. Aspiration into the lungs can cause damage and inflammation to the lungs.
Target Organs	Lungs, Kidneys
Prolonged Exposure	Symptoms include nausea, headache, vomiting

Glycerin; Glycerol CAS No. 56-81-5

Acute Toxicity	Dermal LD50 = > 10,000 mg/kg (Rabbit) Inhalation LC50 = > 570 mg/m^3 1 hr (Rat) Oral LD50 = 12,600 mg/kg (Rat)
Carcinogenicity	Not listed by ACGIH, IARC, NIOSH, NTP or OSHA
Mutagenicity	No data available
Reproductive Toxicity	No data available

Methanol 67-56-1

Acute Toxicity	Dermal LD50 = 15,800 mg/kg (Rabbit) Inhalation LC50 = 64,000 mg/m^3 4 hr (Rat) Oral LD50 = 5,600 mg/kg (Rat)
Carcinogenicity	Not listed by ACGIH, IARC, NIOSH, NTP or OSHA
Mutagenicity	No data available
Reproductive Toxicity	No data available

12. ECOLOGICAL INFORMATION

Ecotoxicity
MicroC 2000:

Acute Toxicity:	Ceriodaphnia dubia, LC50 @48 hr > 400 mg/L. Pimephales promelas, LC50 @ 96 hr > 400 mg/l.
Chronic Toxicity:	Ceriodaphnia dubia, NOEC 400 mg/L, LOEC > 400 mg/L and IC25 > 400 mg/L. Pimephales promelas, NOEC 200 mg/L, LOEC > 400 mg/L and IC25 284.3 mg/L.
Persistence and degradability	No data available
Bioaccumulative potential	No data available
Mobility in soil	No data available
Other adverse effects	No data available

13. DISPOSAL CONSIDERATIONS

This product as supplied is not classified as a RCRA hazardous waste according to 40 CFR 261. However it should be fully characterized prior to disposal as contamination with other materials may subject it to hazardous waste regulations. RCRA requires the user of the product to determine whether the product meets RCRA criteria for hazardous waste. Always consult with local, state and federal regulations prior to disposal.

14. TRANSPORTATION INFORMATION

US Domestic DOT	Not Regulated
Shipping Name	Glycerin; Glycerol
IMDG	Not dangerous goods
IATA	Not dangerous goods
Marine pollutant	No

15. REGULATORY INFORMATION

United States

Toxic Substances Control Act

The components of this product are listed on the TSCA Inventory of Existing Chemical Substances

Section 302 (EHS) TPQ	Not applicable
Section 304 (EHS) TPQ	Not applicable

SARA Section 311/312 Hazard Categories

Acute - NO
Chronic – NO
Physical - None
Pressure Hazard - NO
Fire Hazard - NO

SARA Section 313

This product may contain trace amounts of a chemical that is subject to reporting requirements of SARA

Methanol CAS # 67-56-1 Typical % Weight in Product 0.0-0.10%

CERCLA

This product may contain trace amounts of a chemical that is subject to reporting requirements of CERCLA

Methanol RQ # 5,000. Typical % Weight in Product 0.0-0.10%

Clean Water Act Section 311 Hazardous Substances (40 CFR 117.3): None

State Right to Know Regulations

California – Proposition 65	WARNING: This product contains a chemical known to the State of California to cause birth defects or other reproductive harm: CAS# 67-56-1 – Methanol
Massachusetts Right to Know	Glycerin, Methanol
Minnesota Hazardous Substances List	Glycerin mist, Methanol
New Jersey Right to Know	Methanol
Pennsylvania Right to Know	Glycerin, Methanol
Rhode Island Right to Know	Glycerin, Methanol

16. ADDITIONAL INFORMATION

SDS REVISION STATUS: February 26, 2024 | Replaces: October 17, 2023

THIS SAFETY DATA SHEET (SDS) HAS BEEN PREPARED IN COMPLIANCE WITH THE FEDERAL OSHA HAZARD COMMUNICATION STANDARD, 29 CFR 1910.1200. THE INFORMATION IN THIS SDS SHOULD BE PROVIDED TO ALL WHO WILL USE, HANDLE, STORE, TRANSPORT, OR OTHERWISE BE EXPOSED TO THIS PRODUCT. WE BELIEVE THIS INFORMATION TO BE RELIABLE AND UP TO DATE AS OF ITS PUBLICATION DATE, BUT MAKE NO WARRANTY THAT IT IS. IF THIS SDS IS MORE THAN THREE YEARS OLD YOU SHOULD CONTACT THE SUPPLIER TO MAKE CERTAIN THAT THE INFORMATION IS CURRENT.

Section 3.4.4.4

Urea

SAFETY DATA SHEET

SECTION 1: Identification of the substance/mixture and of the company/undertaking

1.1 Product identifiers

Product name	Urea
CAS number	57-13-6
Synonyms	Carbamide

1.2 Relevant identified uses of the substance or mixture and uses advised against

Identified uses	Food, Pharma, Technical.

1.3 Details of the supplier of the safety data sheet

Company	Lab Alley, LLC 12501 Pauls Valley Road Austin, Texas 78737 U.S.A.
Telephone	512-668-9918
Fax	512-886-4008

1.4 Emergency telephone

Emergency Phone #	US & Canada: 1-800-535-5053	INFOTRAC
	International 1-352-323-3500	INFOTRAC

SECTION 2: Hazards identification

2.1 Classification of the substance or mixture

GHS Classification in accordance with 29 CFR 1910 (OSHA HCS)
This chemical is not considered hazardous by the 2012 OSHA Hazard Communication Standard (29 CFR 1910.1200).

2.2 GHS Label elements, including precautionary statements

None required.

2.3 Hazards not otherwise classified (HNOC) or not covered by GHS

None identified.

SECTION 3: Composition/information on ingredients

3.1 Components

Chemical name	Common name and synonyms	CAS number	Concentration
Urea	Carbamide	57-13-6	<=100%

SECTION 4: First aid measures

4.1 Description of first-aid measures

General advice

If inhaled Remove to fresh air. Get medical attention immediately if symptoms occur. If not breathing, give artificial respiration.

In case of skin contact Wash off immediately with plenty of water for at least 15 minutes. If skin irritation persists, call a physician.

In case of eye contact Rinse immediately with plenty of water, also under the eyelids, for at least 15 minutes. Get medical attention.

If swallowed Do NOT induce vomiting. Get medical attention if symptoms occur.

4.2 Most important symptoms and effects, both acute and delayed

No information available.

4.3 Indication of any immediate medical attention and special treatment needed

If symptoms persist, call a physician. Treat symptomatically.

SECTION 5: Firefighting measures

5.1 Extinguishing media

Suitable extinguishing media Water spray. Carbon dioxide (CO 2). Dry chemical. Chemical foam.

Unsuitable extinguishing media No information available.

5.2 Specific hazards arising from the substance or mixture

Thermal decomposition can lead to release of irritating gases and vapors. Keep product and empty container away from heat and sources of ignition.
Hazardous Combustion Products: Nitrogen oxides (NOx). Carbon monoxide (CO). Carbon dioxide (CO2). Ammonia.

5.3 Special protective equipment and precautions for firefighters

As in any fire, wear self-contained breathing apparatus pressure-demand, MSHA/NIOSH (approved or equivalent) and full protective gear.

5.4 Further information

Flash Point No information available.

Autoignition Temperature No information available.

Explosion limits

Upper No data available.
Lower No data available.

Sensitivity to Mechanical Impact No information available.
Sensitivity to Static Discharge No information available.

NFPA

Health	Flammability	Instability	Physical hazards
1	0	0	N/A

SECTION 6: Accidental release measures

6.1 Personal precautions, protective equipment and emergency procedures

Ensure adequate ventilation. Use personal protective equipment as required. Avoid dust formation.

6.2 Environmental precautions

Should not be released into the environment.

6.3 Methods and materials for containment and cleaning up

Sweep up and shovel into suitable containers for disposal.

6.4 Reference to other sections

For disposal see Section 13.

SECTION 7: Handling and storage

7.1 Precautions for safe handling

Precautions on safe handling

Ensure adequate ventilation. Wear personal protective equipment/face protection. Do not get in eyes, on skin, or on clothing. Avoid ingestion and inhalation. Avoid dust formation.

Hygiene measures
Handle in accordance with good industrial hygiene and safety practice.

7.2 Conditions for safe storage, including any incompatibilities

Storage conditions
Keep in a dry, cool, and well-ventilated place. Keep container tightly closed.

Incompatibilities
Strong oxidizing agents. Chlorine. Sodium hypochlorite.

SECTION 8: Exposure controls/personal protection

8.1 Occupational exposure limits
This product does not contain any hazardous materials with occupational exposure limits established by the region specific regulatory bodies.

8.2 Exposure controls

Appropriate engineering controls
Ensure adequate ventilation, especially in confined areas. Ensure that eyewash stations and safety showers are close to the workstation location.

Personal protective equipment

Eye/face protection
Wear appropriate protective eyeglasses or chemical safety goggles as described by OSHA's eye and face protection regulations in 29 CFR 1910.133 or European Standard EN166.

Skin protection
Wear appropriate protective gloves and clothing to prevent skin exposure.

Body Protection
Wear appropriate protective gloves and clothing to prevent skin exposure.

Respiratory protection
Follow the OSHA respirator regulations found in 29 CFR 1910.134 or European Standard EN 149. Use a NIOSH/MSHA or European Standard EN 149 approved respirator if exposure limits are exceeded or if irritation or other symptoms are experienced.

Control of environmental exposure
No information available.

SECTION 9: Physical and chemical properties

9.1 Information on basic physical and chemical properties

Physical State	Solid
Appearance	White
Odor	Ammonia-like
Odor Threshold	No information available
pH	7.2 (10% solution)
Melting Point/Range	132.5 - 134.5 °C
Boiling Point/Range	Decomposes below BP
Evaporation Rate	Not applicable
Flammability (solid)	No information available
Flammability or explosive limit	No data available
Upper	
Lower	
Vapor Pressure	0.002 hPa (750°C)
Vapor Density	Not applicable
Density	No information available
Solubility	590 g/l (20°C)
Partition coefficient; n-octanol/water	Log Kow=-2.11; Log P(oct)=-2.97 to -2.26
Autoignition Temp	No information available
Decomposition Temp	At 180°C, decomposition begins
Viscosity	Not applicable
Molecular Formula	C H4 N2 O
Molecular Weight	60.06 g/mol
VOC Content(%)	No information available
Oxidizing properties	No information available

9.2 Other safety information

No information available.

SECTION 10: Stability and reactivity

10.1 Reactivity

No information available.

10.2 Chemical stability

Stable under normal conditions.

10.3 Possibility of hazardous reactions

None under normal processing.

10.4 Conditions to avoid

Incompatible products.

10.5 Incompatible materials
Strong oxidizing agents, Chlorine, Sodium hypochlorite.

10.6 Hazardous decomposition products
Nitrogen oxides (NOx), Carbon monoxide (CO), Carbon dioxide (CO2), Ammonia.

SECTION 11: Toxicological information

11.1 Information on toxicological effects

Product Information, Component Information

Acute toxicity

Component	LD50 Oral	LD50 Dermal	LC50 Inhalation
Urea	8471 mg/kg (Rat)	-	-

Skin corrosion/irritation
No information available.

Serious eye damage/eye irritation
No information available.

Respiratory or skin sensitization
No information available.

Germ cell mutagenicity
Mutagenic effects have occurred in experimental animals.

Carcinogenicity

Component	CAS	IARC	NTP	ACGIH	OSHA	Mexico
Urea	57-13-6	Not listed	Not listed	Not listed	Not listed	Not listed

Specific target organ toxicity - single exposure
None known.

Specific target organ toxicity - repeated exposure
None known.

Reproductive toxicity
No information available.

Chronic effects
No information available.

11.2 Additional Information

The toxicological properties have not been fully investigated. See actual entry in RTECS for complete information.

SECTION 12: Ecological information

12.1 Toxicity

Product		Species	Test Results
Urea	LC50	Poecilia reticulata	16200 - 18300 mg/L/96h
	EC50	Photobacterium phosphoreum	23914 mg/L/5 min
	EC50	Daphnia magna	3910 mg/L/48h static

12.2 Persistence and degradability

No information available.

12.3 Bio accumulative potential

No information available.

12.4 Mobility in soil

No information available.

12.5 Results of PBT and vPvB assessment

No information available.

12.6 Endocrine disrupting properties

No information available.

12.7 Other adverse effects

No information available.

SECTION 13: Disposal considerations

13.1 Waste Disposal Methods

Chemical waste generators must determine whether a discarded chemical is classified as a hazardous waste. Chemical waste generators must also consult local, regional, and national hazardous waste regulations to ensure complete and accurate classification.

SECTION 14: Transport information

DOT (US) Not regulated.

IMDG Not regulated.

IATA Not regulated.

SECTION 15: Regulatory information

US federal regulations This product is a "Hazardous Chemical" as defined by the OSHA Hazard Communication Standard, 29 CFR 1910.1200.

TSCA Section 12(b) Export Notification (40 CFR 707, Subpt. D)

Not applicable.

CERCLA Hazardous Substance List (40 CFR 302.4)

Not regulated.

SARA 304 Emergency release notification

Not regulated.

OSHA Specifically Regulated Substances (29 CFR 1910.1001-1053)

Not regulated.

Superfund Amendments and Reauthorization Act of 1986 (SARA)

SARA 302 Extremely hazardous substance

Not listed.

SARA 311/312 Hazardous

See Section 2 for more information.

SARA 313 (TRI reporting)

Not regulated.

Other federal regulations

Clean Air Act (CAA) Section 112 Hazardous Air Pollutants (HAPs) List

Not regulated.

Clean Air Act (CAA) Section 112(r) Accidental Release Prevention (40 CFR 68.130)

Not regulated.

Clean Water Act (CWA)

Not regulated.

FEMA Priority Substances Respiratory Health and Safety in the Flavor Manufacturing Workplace

Not listed.

US state regulations

US. Massachusetts RTK - Substance List

Not listed.

US. New Jersey Worker and Community Right-to-Know Act

Not listed.

US. Pennsylvania Worker and Community Right-to-Know Law

Not listed.

California Proposition 65

Not listed.

SECTION 16: Other information

Issue date: 01/08/2024
Revision 1: 11/12/2024

SECTION 17: Disclaimer

The information provided on this Safety Data Sheet is correct to the best of our knowledge, information and belief at the date of its publication. The information given is designed only as a guide for safe handling, use, processing, storage, transportation, disposal and release and is not to be considered as a warranty or quality specification. The information relates only to the specific material designated and may not be valid for such material used in combination with any other material or in any process, unless specified in the text.

Section 3.5

Effluent Disinfection

Section 3.5.1

UV Feed Pumps

Pumps
Business Unit

Operating and Maintenance Instructions



NETZSCH Canada, Incorporated
500 Welham Road
Barrie, Ontario L4N 8Z7
Tel: (705) 797-8426
Fax: (705) 797-8427
Toll: 866 683-7867

www.pumps.netzsch.com

WARNING!!!!

When **Variable Frequency Drives (VFD's)**
are being used to vary the speed of the
NETZSCH Progressing Cavity Pumps, then they
MUST be CONSTANT TORQUE VFD's.

How the pump works

NETZSCH Progressing Cavity Pumps operate at a constant torque requirement for a specific operating pressure. The speed of the pump does NOT affect the torque requirement. **For example:** a pump running at 60psi output pressure at a speed of 200 revolutions per minute requires the same toque input as if it were running at 60psi output pressure at a speed of 600 revolutions per minute. The only exception to this rule is during pump startup; at the moment the pump starts the motor must provide more torque than the pump requires when it is running. This is due to the force of static friction that the motor must overcome in order to begin rotation. Although this is only a momentary force, enough torque has to be available to break the static load.

How the VFD works

Variable Frequency Drives work by taking the supplied power and modulating the supplied power frequency in linear proportion to the supplied voltage. This proportional modulation allows the motors speed to be altered without the motor drawing too many amps and burning out. A VFD can be built to perform this modulation in one of two ways. The VFD can be set to modulate the frequency above the normal supplied 60HZ frequency allowing the output to provide a constant amount of power but the torque will drop off as speed is increased **(THIS IS A CONSTANT HP VFD**) or it can modulate the frequency below the normal supplied 60HZ frequency allowing the output to provide constant Torque but the power will decrease as the speed is reduced **(THIS IS A CONSTANT TORQUE VFD).** This relationship is shown in the detail below. The manufacturers of VFD's typically offer two service factors. Normal Duty; which

has an overload capacity of the VFD's full load ampere rating times 110% - 120% for one minute and Heavy Duty; which has an overload capacity of the VFD's full load ampere rating times 150% for one minute. Typically, constant Hp VFD's are sold with a Normal duty rating since the applications don't call for high starting torque which causes amp draw to spike. Constant torque VFD's are usually sold with heavy duty ratings so that they can supply elevated startup amp draws for high starting torque applications.

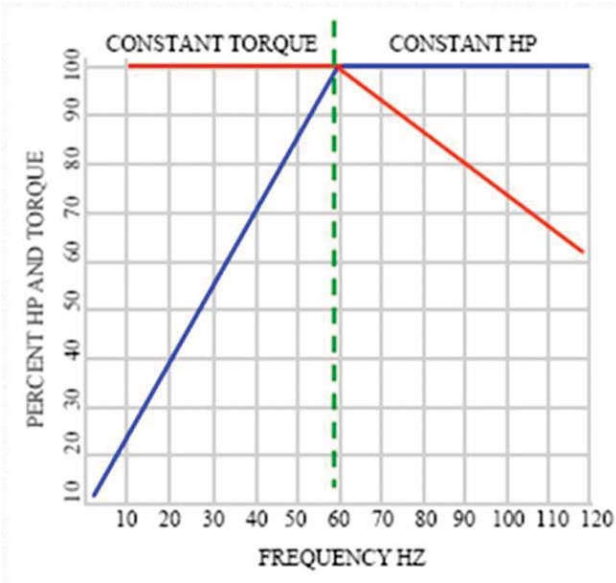

VFD Speed Torque Characteristics

Blue = Horsepower
Red = Torque
Green = Motor Nameplate Frequency (60 Hz)

In Constant Torque Area - VFD supplies rated motor nameplate voltage and motor develops full horsepower at 60 hertz base frequency.

In Constant Horsepower Area - VFD delivers motor nameplate rated voltage from 60 Hertz to 120 hertz (or drive maximum). Motor horse-power is constant in this range but motor torque is reduced as frequency increases.
Note: Motor HP = Torque x RPM

Application:

Because while running a progressing cavity pump the torque value required by the pump is fixed; any reduction in supplied torque as a result of operational speed could cause the pump to fail. Also, depending on the running speed required, a constant HP VFD may not be capable of supplying the torque needed for pump startup. This is the reason a **Constant Torque** VFD **MUST** be used to operate a progressing cavity pump.

	TABLE OF CONTENTS	PAGE 0.0

		Page
1	Safety Precautions	1.0
2	Description	2.0
3	Packing, Transportation, Storage	3.0
4	Installation Instructions	4.0
5	Start-up	5.0
6	Temporary Shutdown	6.0
7	Maintenance	7.0
8	Trouble-Shooting and Remedying	8.0
9	Dismantling and Assembly of the Pump Housing	9.0
10	Dismantling and Assembly of the Rotating Parts	10.0
11	Removal and Fitting of the Connecting Shaft	11.0
12	Dismantling and Assembly of the Shaft Sealing	12.0
13	Dismantling and Assembly of Special Units	13.0
14	Recommended Stock of Wear Parts	14.0
15	List of Spares and Sectional Drawing	15.0
16	List of After-Sales Service Centres	16.0

Remark: Because of data transfer the text sheet printouts of our operating instructions do not contain a personal signature.

1 Safety Instructions

This manual contains basic instructions which must be observed when installing, operating and servicing the machine / equipment. It is essential therefore for the user / installer or responsible technician to read the manual thoroughly prior to installation and operation.
A copy of the manual must always be at hand where the machine / equipment is being used. In addition to the general safety instructions listed in this main section on safety, it is necessary to observe the special safety rules included in other sections of the manual, eg. for private use.

1.1 Safety Signs

The signs below are printed in the manual as general hazard / danger symbols to mark those safety instructions whose non-observance can result in danger to personnel or to the machine / equipment. These signs are:



Hazard sign DIN 4844 - W9
Danger to general public

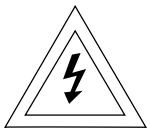

Hazard sign DIN 4844 - W8
Risk of electric shock

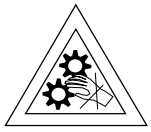

Risk of injury from machinery



Danger from suspended loads

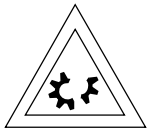

Damage to machinery



Risk of injury to your eyes: goggles required.

Continued Page 1.0R

Warning plates located directly on the pump/ equipment showing for example the correct direction of rotation or the fluid connections used must always be observed and kept completely legible.

1.2 Personnel Qualifications and Training

Operating, maintenance, inspection and installation staff must possess the correct qualifications for their work. Areas of responsibility, scope of authority and staff supervision must be exactly defined by the user. If personnel do not have the necessary knowledge they must receive due training and instruction. If necessary, the user of the machine / equipment can arrange for such training and instruction to be provided by the manufacturer / supplier. The user must also make sure that the content of the manual is fully understood by the staff concerned.

Responsibilites

All work on and operation of the pump/ equipment should be carried out by trained/ competent and qualified operators, tradesmen and / or engineers as appropriate.

Any person responsible for or in charge of

– **working with lifting gear** and ropes when moving a pump / equipment will have to be duly instructed prior to doing the transportation job;

– **mounting a drive** to a pump / equipment must be qualified / trained as an industrial mechanic / technician;

– **setting up installations into a plant** must be qualified / trained as an industrial mechanic/ technician and must be familiar with the design and functioning of the plant in which the pump / equipment is being installed;

– **doing work on starting up, operation and maintenance** must gain knowledge of the pump / equipment principle prior to performing such works and must study the safety instructions and the manual thoroughly;

– **doing repair works**, and prior to doing such works, must be trained and skilled in the job. He must have due knowledge of the pump/ equipments specific details set up in the repair instructions. Unskilled personnel must be trained and repair works checked.

1.3 Dangers arising from Non-Observance of the Safety Instructions

Non-observance of the safety instructions can result in danger to personnel as well as to the environment and the machine. Non-observance of the safety instructions can result in the loss of claims for compensation.

Non-observance of the safety instructions can have, for example, the following consequences:

▲ Failure of essential functions of the machine / equipment

▲ Failure of mandatory maintenance and servicing methods

Continued Page 1.1

- ▲ Danger to personnel from electricity, machinery and chemicals
- ▲ Danger to the environment from leakage of hazardous substances.

1.4 Safety Conscious Working

In addition to the safety instructions listed in the manual, it is essential to observe the national accident prevention directives currently in force and any of the users own internal regulations concerning work and safety.

1.5 Safety Instructions for the User / Operator

- ▲ If there is a risk of danger from any hot or cold machine component, the user must fit protective guards to prevent such components from being touched (according to Standard EN 563).
- ▲ Protective guards fitted to prevent contact with moving parts (eg. couplings) must be in position when the machine / equipment is in use.
- ▲ Leakages (eg. from a shaft seal) of hazardous materials (eg. explosive, toxic, hot material) must be discharged in such a way that neither personnel nor the environment are placed at risk. Legal directives must be observed.
- ▲ All possible danger from electricity must be eliminated (for details see eg. the regulations of your local power supply company).

1.6 Safety Instructions for Maintenance, Inspection and Installation

The user must ensure that all maintenance, inspection and installation work is carried out by authorized and qualified personnel who understand the operating instructions and are adequately trained.

Work on a pump / equipment must only be carried out with the machine stopped and electrical power supply turned off. The pump/ equipment must not be under any pressure and must have cooled off. All procedures detailed in these operating instructions on the stoppage of the machine must always be adhered to.

Pumps / equipment which convey harmful media must be decontaminated.

Immediately after the maintenance work is finished all safety devices and guards must be re-installed and the safety trips must be tested.

Before putting the machine back into operation the points detailed in section "Start-up" should be observed.

Continued Page 1.1R

1.7 Unauthorized Modifications and Manufacture of Spares

Modifications or changes to machines / equipment are only permissible with the manufacturer's agreement. Original spare parts and accessories authorized by the manufacturer ensure safety.
The use of other components revokes any liability for consequences which may result.

1.8 Improper Application

Delivered machinery / equipment is only guaranteed safe for the use specified.

This machine / equipment was designed in accordance with the prescribed conditions of use.
The limits of use are laid down in the conditions of use and should in no way be exceeded.

1.9 Specific Points for the Use of a NEMO® Pump

A NEMO® pump must be used for the **purpose only** for which it was sold.

If you change or wish to change the process medium, you must check with either the supplier or manufacturer that the pump is suitable for the new medium. This is especially important with aggressive, poisonous or otherwise hazardous substances.

Pump criteria include:

1. Compatibility with the medium
2. Suitability for seal design / material, especially the shaft seal
3. Resistance to pressure and temperature of the medium.

Please note that NEMO® pumps are progressing cavity pumps and as such can generate very high pressure.

A blockage or the chance closure of a valve in the discharge line can cause a pressure rise **manifold as high as can be tolerated by the installation**. This can result in the bursting of pipes, which must be avoided especially in the case of dangerous media.

Corresponding safety equipment must therefore be installed, for example an emergency stop button, a pressure relief valve with return pipe or a bursting disc.

During maintenance and repair work on the pump please note the following:

1. Ensure that the pump drive **can not** be turned on without authorization.
2. When opening the pump follow the instructions for handling the medium (eg. protective clothing, no smoking etc).
3. Before putting the pump back into operation ensure that all guards and other safety devices (eg. drive–belt protection, coupling protection) are properly re–installed.

Continued Page 1.2

1 SAFETY PRECAUTIONS

Always bear in mind your safety during operation, maintenance and installation of equipment. Please adhere to the EC-Directive for machinery including the national regulations and follow the US OSHA regulation #1910.219 & 1910.147 titled Mechanical Power transmission apparatus as well as the European Standard EN 292 with the accidents prevention rules laid down by the trade unions and other appropriate technical institutions.

Always bear in mind your safety during operation, maintenance and installation of equipment. Please adhere to the EC-Directive for Machinery including the national regulations and follow the European Standard EN 292 with the accident prevention rules laid down by the trade unions and other appropriate technical institutions.

Continued Page 1.2R

1.10 Notes on Inspection and Repair

The legal regulations for safety at work, such as regulations for the workplace, regulations governing dangerous materials, accident prevention, environmental protection eg. regulations on disposal and water balance obligate all commercial business to protect their employees and / or people and the environment from adverse effects caused by contact with dangerous materials.

Important:

Inspection / repair of machinery and its parts only takes place when a safety conformity certificate has been completed by an authorized and qualified specialist. Please use a copy and leave the original in the operation and maintenance manual.

Where special safety precautions are necessary in spite of careful emptying and cleaning of the machinery, the necessary information must be given.

Machinery operating with radio-active media will only be repaired or inspected by one of our specialist engineers under the safety of the owner.

The safety conformity certificate is part of the inspection / repair service. We reserve the right to refuse acceptance of this order / service for other reasons.

Continued Page 1.3

1.11 Instructions concerning explosion protection

The instructions below are to be considered and kept to when using pumps in potentially explosive areas in order to guarantee durable explosion protection of the pumps and avoid any danger of ignition.

In accordance with the regulations 94 / 9 / EC, the pumps are admitted for use in the area II 2G IIB T 4 or II 2G IIB T 3
(pls. see manufacturer's declaration or declaration of conformity).

It is to be taken into account that in case of aggregates the components (e.g. gears, couplings) mounted on the pumps must comply with the regulations 94 /9 / EC as well. The relevant documentation concerning these components is to be considered.
The application area of aggregates is determined by the application area of the mounted component with the lowest approval and thus may deviate from the allowed application area of the pump.

Temperature category	Max. temperature of the conveying product
T 4	100 °C
T 3	165 °C
T 2	265 °C
T 1	415 °C

The maximum conveying product temperatures apply when mechanical seals of Messrs. Burgmann with **carbide – carbide** and **carbide – carbon** as sliding material combinations are used.
In the case of other manufacturers or other sliding material combinations it is necessary to consult the manufacturer.

1. **Assembly and repair in potentially explosive areas**

   When performing assembly and repair work, it is to be seen to it that no dangers of ignition arise especially during heating up the pump parts. This means e.g. heating up by explosion-proof heating devices or exclusively in non-explosive areas. The temperature of the heated part and the ignition temperature of the materials by which the danger of explosion may be caused are to be considered.

2. **Dry-running protection**

   Under no circumstances is the pump to run dry.
   The pump is to be equipped with an appropriate dry-running protection device.

Continued Page 1.3R

The device for dry-running protection should be self-regulating.
This means that this device can give alarm signals and/or switch off the pump also in case of failures in its own control system.

Dry-running protection concerning stationary immersion pumps (with mounting plate)

Operation is only permitted with redundant or self-regulating automatic devices to guarantee dry-running protection as well as to control the pump capacity.

Dry-running protection concerning movable immersion pumps (drum pumps)

The filling with liquid during the operation is to be ensured by specific requirements of behavior:

- Drum pumps may only be introduced in and removed from the container in switched-off condition
- Drum pumps, after being introduced in the container to be discharged, may only be started after they have immerged in the fluid.
- Drum pumps are to be switched off before they run dry or are to be switched off at once when specific noises ("slurping" or speed rise) suggest that dry running may or will immediately occur.

3. **Overpressure protection**

   The pump must not be loaded over the maximum allowable pressure.
   The pump is to be equipped with an appropriate overpressure protection device. The pump must not convey against a closed slide valve.
   The overpressure protection device should be self-regulating.

4. **Drives**

   The drives must be adjusted to the performance of each pump.
   In the case of a blocking of the pump, the drives must be turned off automatically by means of a motor protection unit.

5. **Alignment of the drive (concerning the pump types SY / SH / SA / SO / SF / SP)**

   It is absolutely necessary that the drive be aligned within the maximum allowable tolerances. Incorrect alignment causes damage to the seals and the shaft bearings.

6. **Potential equalization concerning immersion pumps**

   The immersion pumps are to be integrated in the potential equalization of the installation. Hand-operated movable immersion pumps are to be grounded before being introduced in the container.

Continued Page 1.4

The connection to ground is to be maintained until the pump has been completely pulled out of the container.
There must not be any potential difference between the pump and a conductive container. This means that container and pump are to be connected at a common grounding point and thus be conductively connected with each other.
(see information brochure "Statische Elektrizität, Zündgefahren und Schutzmaßnahmen" (Static electricity, dangers of ignition and preventive measures); Publisher: "Internationale Sektion für die Verhütung von Arbeitsunfällen und Berufskrankheiten in der chemischen Industrie der IVSS" (International section for the prevention of employment accidents and occupational diseases in the chemical industry of the ISSA (International Social Security Association)) , Heidelberg 1995).
The hand-operated movable immersion pumps are to be provided with an indication referring to the grounding measure (pay attention to grounding).

7. **Potential equalization concerning all other pump types (no immersion pumps)**

   All conductive parts of the pump are to be integrated in the potential equalization of the pumping set unless the conductive connection to the ground potential is guaranteed by the drive or connecting shafts or otherwise.

8. **Stator**

   The stator is to be regularly checked for wear. When the allowable wear limit is reached, the stator is to be replaced. Before exchanging the conveying product, the pump operator has to consult the manufacturer concerning the durability of the stator unless the stator has already been confirmed for the intended application.

   Inspection and maintenance interval of the stator:
   - **in the case of an operating time of > 16 h/day, at least twice a year**
   - **in the case of an operating time of < 16 h/day, at least once a year.**

9. **Joints / joint lubrication**

   The sealing and the lubrication of the joints are to be regularly checked. If necessary, the seals and the lubricants are to be replaced.

   Inspection and maintenance interval of the joints:
   - **in the case of an operating time of > 16 h/day, at least twice a year**
   - **in the case of an operating time of < 16 h/day, at least once a year.**

10. **Inspection after initial startup**

    The aspects relevant for ensuring the explosion protection (such as lubrication and wear check) are to be checked six months after the initial startup of the pump at the latest.

Continued Page 1.4R

11. **Shaft bearings**
(concerning the pump types SY / SH / SA / SO / SF / SP)

Replacement of the bearings after 14,500 operating hours (according to prEN 13463-5: replacement after 90 % of the designated service life).

12. **Materials**

Although being allowed as material for the pumps, aluminum should be avoided in potentially explosive areas.
The pumps may only be used if, under the particular operating conditions, the materials are resistant to mechanical and/or chemical influences or corrosion such that the explosion protection will be maintained.

13. **Noise development**
(concerning the pump types SO / BO / SF / BF / SP / BP)

As soon as unusual noises (such as knocking or rubbing) are realized, the pump is to be switched off. The cause of the failure is to be eliminated before the pump is reoperated.
Regular check of the paddle equipment.

14. **Direction of flow of immersion pumps**

The direction of flow of immersion pumps always has to be from the end connection piece to the pressure nozzle at the top. The reverse direction of flow is not allowed.

15. **Mechanical seal of immersion pumps**

Before the initial startup and after a prolonged shutdown, the mechanical seal is to be lubricated from outside before the pump is started. In this connection, the compatibility of the lubricant with the sealing material is to be considered.

16. **Impurities in immersion pumps**

Especially in the case of hand-operated movable immersion pumps it is to be seen to it that no impurities can get into the pump. The pumps are to be deposited only on clean and solid ground or else to be suspended. In case of unusual noises or power losses, the immersion pumps are to be switched off immediately.

17. **Gland**

If a gland packing is applied it has to be observed that the permitted temperature corresponding to the temperature category is not exceeded. Recommendation: fasten the screws of the stuffing box gland only with low torque (approx. 5 Nm).

Continued Page 1.5

Safety Conformity Certificate

The machinery and its accessories together with this safety conformity certificate relating to repair / inspection services given to the undersigned by ourselves

Machine Type .....
Number .....
Delivery Date ..... Delivery Note No. .....

was carefully emptied and cleaned both inside and out in preparation for shipment
☐ yes
☐ no

Special safety precautions with regard to health or media endangered by water are to be implemented
☐ necessary
☐ unnecessary

The machinery is set up to transport materials dangerous to health or water and came in contact with media containing harmful substances
☐ yes
☐ no

The following safety precautions are necessary with regard to irrigation media, overflow liquid and waste management:

.....

.....

We confirm that the above mentioned details are correct and complete and that despatch will follow in accordance with the legal requirements:

Company ..... Telephone .....
..... Fax .....
..... Telex .....

Address

.....

.....

Name ..... Position .....

....
Date Company Stamp / Signature

2 Description

The NEMO® pump is a progressing cavity pump.
The main components which determine the system discovered by Professor René Moineau are a rotating part, called the rotor and a static part, called the stator.
The rotor is a helical screw with an extremely large pitch, large thread depth and small centre diameter with round cross-section for 1/2-geometry and elliptical cross-section for 2/3-geometry. The stator has a two start or resp. 3 start thread and is double or resp. 1.5 the pitch length of the rotor. This provides space for the medium between the rotor and stator. When the rotor turns round inside the stator the medium moves continuously from the inlet to the outlet.

The universal NEMO® pump system unifies many positive characteristics of other pump types:

- Like centrifugal pumps NEMO® pumps have no suction or pressure valves, but do have a stable flow rate in proportion to the number of revolutions.
- Like piston pumps NEMO® pumps have a suction capability of up to 8.5 m vacuum metric.
- Like membrane and peristaltic pumps the NEMO® pump can transport every type of inhomogenous, gaseous and abrasive media, as well as those that are not of a liquid consistency or contain solids and/or fibrous material.
- Like gear pumps and screw pumps the NEMO® pump is capable of coping with high medium viscosities.
- Like piston, membrane, gear or screw pumps the NEMO® pump can perform dosing operations.

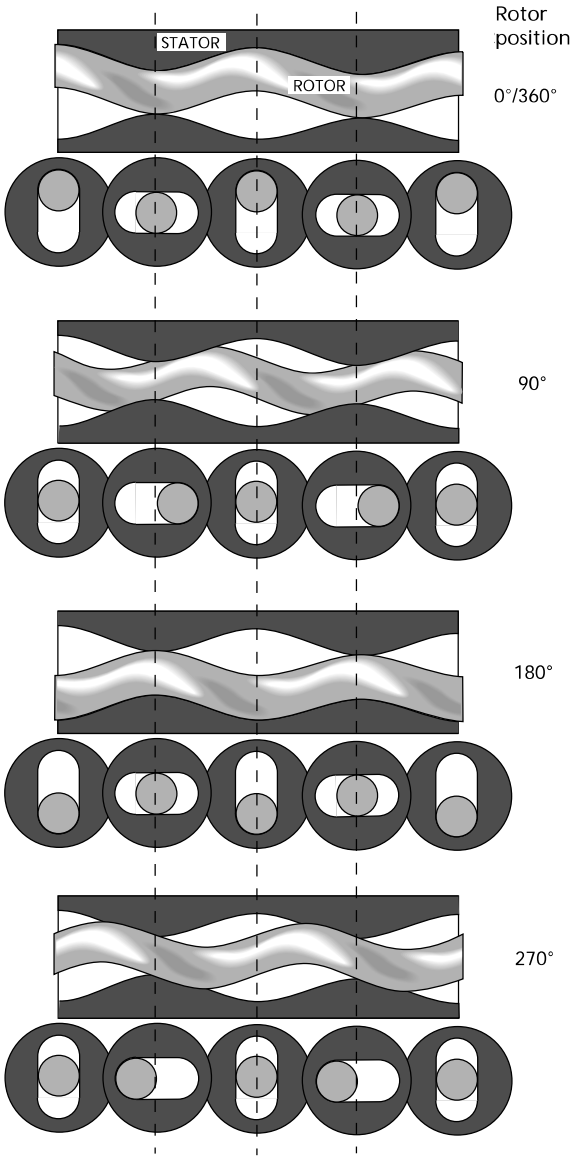

Length and cross-sections through the rotor and stator with 1/2-geometry during a rotation.

Continued Page 2.0R

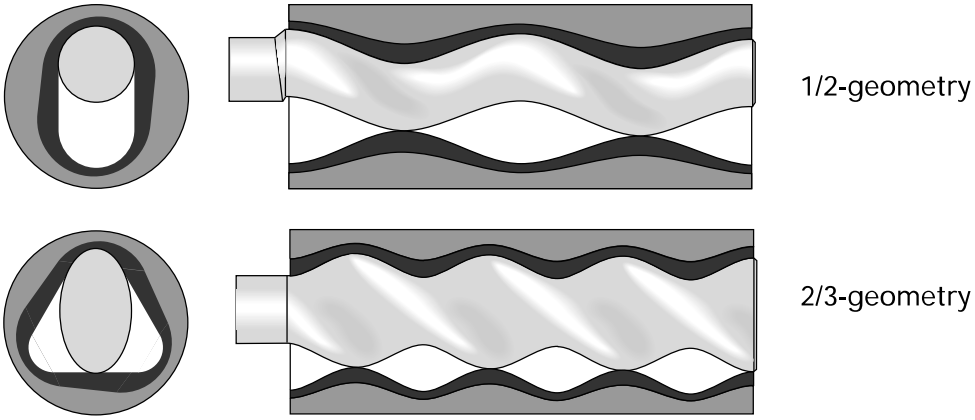

Length and cross-sections through the stator with rotor
with reduced stator wall thickness

2.2 General Data

Noise emissions:

The maximum permitted noise emission level at a work place is 70 dB (A).

The noise level was measured in accordance with DIN Standard 45635-24-01-KL2 to assure that the pump does not exceed 70 dB (A).

Noises generated by the drive and pipes are not included in the above emission value.

A prerequisite for the noise emission level of ≤ 70 dB (A) is that the pump is operated in a cavity free regime and is bolted to a concrete base.

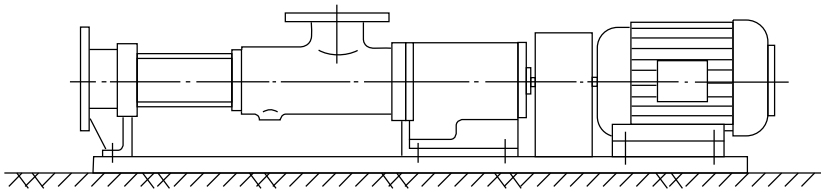

3 Packaging, Transportation, Storage

3.1 Packaging and Transportation

NEMO® pumps are shipped in railroad containers or crates unless the customer specifies otherwise.
The packings are labelled and symbols give the handling instructions in accordance with DIN 55402.
On receipt check for any transport damages.
Transport damages should be reported to the transporter immediately.
The pumps should be transported as closely as possible to the location of installation and only there should they be uncrated.

Uncrated horizontal pumps should be lifted by using a shackle which can be attached to the baseplate. The bolt holes of the frame or the lifting lugs attached to the baseplate could be used as shown on the installation drawing.

Vertical pumps should be lifted by using the bolt down holes, lifting lugs or shackles attached to the baseplate. This is shown on the installation drawing. For most applications, the drive is mounted on top of the pump.



Be careful when lifting top heavy pumps. The centre of gravity may be above the points where the lifting gear is attached to. If the case, secure additionally against tipping over!

Vertical pumps should not be deposited unless they are secured vertically. **Hazards of tipping!** Deposit only in horizontal position!



It is essential to avoid that the total pump unit be suspended with eye bolts of the motor or gear box. These eye bolts should be used for lifting the motor and/or the gear box **only.**

The Accident Prevention Rules, Section 18.4 relating to lifting accessories for the lifting of loads (VBG 9a) must be strictly adhered to.

Because of the variety of possible pump designs and applications, only general instructions can be given here. These should be good enough for experienced assemblymen or transportation experts.
When in doubt, please ask for detailed information on the pump unit concerned.

Continued Page 3.0R

When moving the pump or unit on **wheels** strictly attend to the following:

- Pad lock the motor drive and secure against unintended starting up.
- Move the pump unit carefully and slowly, especially where the ground is uneven. **Hazards of tipping!**
- Ensure a stable position of the pump or unit at the operating/storage place and secure it by actuating **all** clamping devices on **all** the wheels or rollers against voluntary moving away.
- Where fitted loosely, carefully watch the pipe bends when pumping. **Power of repulsion!**
- Where necessary, secure the pump unit additionally with support blocks.

3.2 Storage

The pumps are preserved for transport unless specified otherwise.
In cases of longer storage the pumps should be handled as follows until installation:

- **Stator:**

If the pump is not to be used immediately, then the elastomer along the contact line between rotor and stator may become permanently distorted (compression-set). This will increase the break away torque. Therefore, the stator should be removed and kept separately in a clean, cool and dry environment.
Standard DIN 7716 summarizes detailed information on the storage of rubber products, some of which is gathered here, and the following notice applies to a storage for a period of up to six months.

General

Most of the rubber products may change their physical properties under unfavourable conditions or if treated improperly, which will result in a shorter lifetime.
Or they may become useless through excessive hardening, aging, regenerating or permanent deformation, also because of blistering, cracking or other damages appearing on the surfaces.
The changes may occur under the influence of oxygen, ozone, heat, light, humidity, solvents or because of storing the products under tension.
If stored and treated properly, the rubber products will keep their properties, even over a long period of time (some years), almost unchanged.
This does, however, not apply to uncured rubber compounds.

Continued Page 3.1

Store room

The environment in which rubber products are being kept must be cool, dry, free of dust and rather airy, and they must not be stored in the open, not even in a weather sheltered space.
Rubber products should be kept in surroundings not having less than minus 10 °C and not more than plus 15 °C.
Store rooms should not be damp, and it must be ensured that there will be no condensation.
Most favourable is an environment offering a relative humidity under 65 %.
Rubber products must be protected against light, particularly direct sunlight or artificial light when having a high UV portion.
They should furthermore be kept away from ventilation, especially draught, by wrapping them up.
As ozone is very aggressive and harmful there should be no store room used which houses equipment likely to produce ozone, e.g. electric motors or other equipment which might bring about sparks or other electrical discharges.
There must be no solvents, oil, grease, lubricants or any chemicals kept in a store room.

- **Rotor**

  Please support with wooden blocks and cover up against harm from mechanical impact.
  For rotors of RCC (material number 1.2436):
  coat the surfaces with protective grease to avoid rusting.

- **Shaft Sealing by packing gland**

  Remove the gland and coat the exposed shaft surface with grease.

- **Pump parts in stainless steel**

  No grease coating necessary.

- **Other, non-coated pump parts**

  Protect with grease.

- **Drives**

  Please observe the drive supplier's instructions.

4 Mounting and Installation

If the NEMO® pump was stored and the rotor grease protected: Remove the grease before installing the stator. Clean the rotor thoroughly in order to avoid unsuitability of the grease with the stator material and the pumping medium.

Screw the pump at all fixing points (bearing housing / drive stool, end stud, support feet) using all fixing bores securely down to the sub-structure (ground plate, machine frame, foundation etc.).

4.1 Direction of Rotation

The direction of rotation of the pump is given on the model plate and in the order confirmation. The direction of delivery of the NEMO® pump is a function of the direction of rotation.

Changes must be agreed upon and confirmed by the supplier.

4.2 Pressure

If not explicitly confirmed otherwise in the order confirmation, the **maximum permissible pressure (e.g. when turning clockwise) inside the pump housing (A)**

– for models with pump housing of cast iron 6 bar

– for models with welded pump housing 10 bar.

The maximum permissible pressures inside the end flange (B) is a function of the design applied for connections

- with flange: maximum nominal pressure (e.g. PN 16)
- with threaded internal socket: maximum 25 bar
- with DIN 11851 "dairy" thread up to DN 100 for one or two stage pumps: max. 12 bar, for multi stage pumps: max. 25 bar
- for other versions: maximum permissible pressure of the socket connection, but not more than 6 bar per pump stage, depending on the stator installed.

4.3 Piping System

- Arrange suction and pressure pipes so that when the pump is not running, the medium is still present before and after the pump. Sufficient media should remain inside in order to lubricate the pump during restart.

Continued Page 4.0R

4 INSTALLATION INSTRUCTIONS

■ The installation of a removable distance piece between the end flange (B) and the pipe work is recommended in order to make the dismantling of the stator easy. The distance piece (see sketch) needs to have a minimum "ABL" disassembly length the values of which are shown in the table below, depending on the pump size and the number of stages.

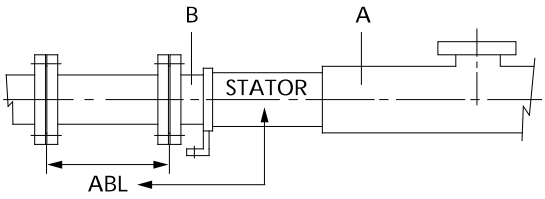

Disassembly length ABL in mm:

Pump size	Number of stages			
	1 *)	2	3	4
0 1 5	90	160	230	310
0 2 1	130	230	340	450
0 3 1	170	310	450	590
0 3 8	230	430	630	830
0 4 5	270	500	730	960
0 5 3	320	600	880	1170
0 6 3	370	690	1010	1330
0 7 6	420	800	1170	1540
0 9 0	500	950	1390	1840
1 0 5	630	1180	1740	-
1 2 5	740	1400	-	-

*) for one stage pumps with L or P geometry the ABL values of 2 stage pumps are valid

Continued Page 4.1

Type key

Example: NM 090 BY 02 S 12 B

- Internal
- **Pump size**
- Type
- Model
- **Number of stages**
- Geometry
- max. permissible pressure difference
- anti–clockwise
- Joint

The disassembly length "ABL" is also shown in the arrangement drawings in accordance with our Standard QSH V - TB 01 - 002.

- Clean the pipe work and rinse thoroughly before installing the pump.
- Connect the pipe work ensuring that no external stress attacks the pump body. The installation of compensators between the pump and the pipework is recommended:
  - No risk of damage to the pump housing from pipelines "resting" on the pump.
  - No risk of damage to the pump housing through vibrating pipelines.
- The twisting loads (F_x, F_y, F_z) and bending loads (M_x, M_y, M_z) permitted to be put on the suction/discharge flange comply with the requirements of API 676 and exceed the requirements of EN ISO 14847. They are shown in the table below.

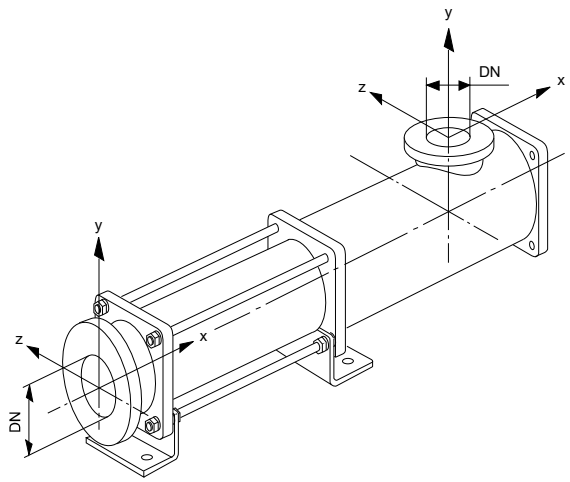

Continued Page 4.1R

Pump type NM	Standard nominal diameter DN	F_x, F_y, F_z N	M_x, M_y, M_z Nm	
015 021	(32) G 1¼"	550	(300)	Screwed joints must not be charged with loads which may result in tightening or loosening these joints
31	50	780	420	
38	65	990	530	
45 53	80	1160	620	
63	100	1490	800	
76	125	1820	980	
90 105	150	2190	1180	
125	200	2850	1530	

4.4 Shaft Sealing

- Where applicable, ensure that adequate supply lines for the buffer, flushing or quenching fluid for the shaft seals are connected **before** the pump is put into **operation**.
  For more details see Section 7.4!

4.5 Electrical Connection



All work relating to electricity shall only be made by **authorized and qualified personnel** and it should be in compliance with the requirements of the relevant national regulations!

In particular for control systems should the latest version of the **EC-Directive for Machinery 98/37/EEC, Annex I, Section 1.2 Controls** be carefully observed!

Note for frequency converter operation:
It is absolutely necessary to connect the PTC-resistors of the drive in case of frequency converter operation to protect the drive against overheating.

5 Start-up

The NEMO® pump design requires strict attention to the following:



Never run the NEMO® pump dry!
A few rotations in dry condition
will damage the stator!

- Before starting up for the first time, fill the pump with medium.
  In the case of high viscosity media fill with a liquid.
  Pump priming is vital to ensure lubrication of the rubber stator.
  Fill the piping on the pump suction side.
  In anti–clockwise rotation only: Fill the pump housing.

The NEMO® pump is a progressing cavity pump which can produce pressures that may cause the bursting of vessels or pipes.



The power transmission train (shaft, coupling rod, joints, rotor) of the pump may be overloaded thus resulting in damage or breakage.

Also the pump housing parts with their connections may be overloaded and break. There is a table in Section 4 of these Maintenance and Operating Instructions showing the pressure resistance of the pump housing parts.



Never run the pump against a closed inlet or outlet valve!

- **Open valves and vents before starting the pump!**
- **Check the direction of rotation by briefly switching on the pump motor.**

DETERMINING WHEN TO LOCKOUT

Having performed a hazard analysis on your company's equipment, you can now determine when machines must be locked out – i.e., when employees are exposed to injury from each (or any) of a machine's hazardous energy sources during servicing or maintenance activities. To do this, use your Hazard Analysis Checklist and the "Four Key Questions for Lockout Implementation."

OSHA Requirements

OSHA rules state that equipment must be locked out during equipment servicing and maintenance whenever employees are exposed to injury from unintentional machine movement or startup. According to OSHA's regulations, servicing or maintenance procedures that require lockout include:

"Workplace activities such as construction, installing, setting up, inspecting, modifying, and maintaining and/or servicing machines or equipment. These activities include lubrication, cleaning, or un-jamming of machines or equipment and making adjustments or tool changes, where the employee may be exposed to the unexpected energization or startup of the equipment or release of hazardous energy."

In addition, lockout is required during any machine service or maintenance that requires an employee to:

- Remove or bypass a safety device; or
- Place any part of his or her body into a point of operation or similar danger zone during a machine's operating cycle.

Routine, Repetitive Activities

Routing and repetitive servicing procedures that take place during normal production operations, such as minor tool changes and adjustments, do not require lockout tagout, as long as the work is performed using "alternative measures which provide effective protection." These "alternative measures" include safeguarding methods approved by OSHA and ANSI (American Standards Institute) to protect operators, such as:

- Presence sensing devices
- Interlocking barrier guards

Remember, the factor that determines whether these or any other safeguarding methods eliminate the need for lockout tagout during routine, repetitive activities is whether the employee is protected from injury.

If lockout is not required, you MUST have clearly written procedure that describe the alternative safeguarding measures used and the tasks that may be performed. Refer to OSHA and ANSI standards for approved safeguarding methods.

6 Temporary Shutdown

- After stopping the pump empty and if necessary rinse it if



  - the medium might freeze due to the temperature surrounding the pump. Especially where there is a danger of frost if the pump is installed outside a building
  - the medium tends to solidify or harden
  - the medium tends to glue up the shaft seal.

- Stator:

  When stored for a long period, the elastomer along the contact line between the rotor and stator may become permanently distorted (compression-set).
  This will increase the break away torque. For this reason, the stator should be removed (please observe Section 9!), and stored in a cool, dry place in air tight package to give protection against light and air.

- Rotor:

  Remove **ceramic rotors** (please observe Section 10!) and store away, safe in the original packing.

  Support **other rotors** on wooden blocks and cover to protect them from mechanical damage, after the stator has been removed.

  Rotors made of RCC (material number 1.2436):
  Protect the rotor surfaces against corrosion with protective grease.



  Remove the grease before re–installing the stator and clean the rotor thoroughly in order to avoid unsuitability of the grease with the pumping medium or the stator material.

- Stand-by pump:

  A stand-by pump is sometimes used as a back-up for the main pump and, when standing idle for longer periods, should be operated from time to time. The pump may otherwise become seized when being started up. This is due to compression set i.e. distortion of the stator against the surface of the rotor.

7 Maintenance

7.1 Pumps in General

- The pumps should be regularly rinsed or cleaned if deposits of medium are likely to build up (sedimentation).





If the pump needs to be opened to do this, ensure that the pump and motor are switched off and cannot be turned on accidently (eg. by removing the fuse).

Periodical standstill to allow for cleaning during operation depends on the medium and type of operation.

- The pump can be cleaned:

  - through the cleaning ports provided in the pump housing
  - manually by dismantling the pump
  - automatically (CIP cleaning) for special housings with a flushing section (important instructions for CIP procedures are given in Section 5 (START UP).

7.2 Lubrication

The NEMO® pump does not require frequent lubrication.

- Maintenance of the drive should be carried out according to the drive manufacturers instructions.

- Maintenance
  - where no manufacturers instructions are available and
  - when normal conditions of use exist:

  - Strip down the drive unit
  - Remove the bearings
  - Clean all parts
  - Renew the lubricant

  every 5000 operating hours or at least every two years.



Special lubricants are often specified for mechanically controlled variable speed drives.
It is therefore important to follow the drive manufacturers maintenance instructions.

7.3 Lubricating the Pin Joints with SM-Pin Joint Seals

- It is advisable to change the oil and check the seals of the pin joints:
  - when renewing worn joint parts
  - when opening the pump for any reason.

  The quantity of oil added per pin joint is a function of the joint external diameter D:

Joint external diameter D in mm (see sketch)	Basic joint size	Quantity of oil per joint in cm^3
28	NM 015	1,5
30	NM 021	2
40	NM 031	5
54	NM 038	15
65	NM 045	22
76	NM 053	36
83	NM 063	78
102	NM 076	165
125	NM 090	205
148	NM 105	450
162	NM 125	470
Journal cross joint 175	NM125	1650

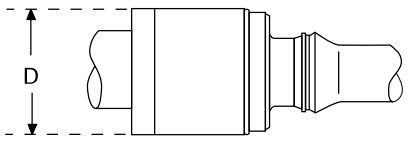

Pin joint

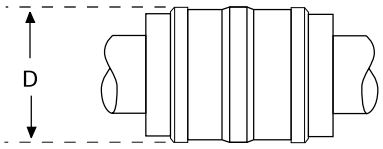

Journal cross joint

Continued Page 7.2R

Lubricating Oil:

Industrial application	Designation DIN 51502	Permitted Product
Food and Beverage Industry only	Authorized for use in foodstuffs — CLP HC 460	"KLÜBER" KLÜBEROIL 4 UH 1 - 460 authorized under USDA H1



This synthetic oil meets both the German "Arzneimittelbuch" requirements and the still stricter US American FDA regulations.
Nevertheless, it is not quite harmless if swallowed in more than minor quantities!

At a sudden break in a joint up to 450 ml of lubricating oil together with metal rubbings may enter the pumping medium. It is therefore of essential importance to regularly check the state of the joint seals and renew in time, if necessary.

If the pin joints operate without lubricating oil or seals, there will be no risk of contaminating the medium with oil. This operation, however, results in a higher amount of rubbed off metal parts through wear on the joints. These metal rubbings will inevitably and continuously come into contact with the pumping medium.

General Industry	CLP 460	"SHELL" Omala 460
	with SM-pin joint seal (8235) of EPDM CLP PG 320	prescribed: KLÜBERSYNTH GH 6-320

7.5 Shaft Sealing through Single Mechanical Seal

There are various constructions of mechanical seals. Especially advantageous is the use of standard mechanical seals according to DIN 24960. These seals have regardless of their brand the same fitting dimensions which makes them interchangeable. Mechanical seals with a coil spring can only be used for pumps which are run in one direction of rotation.

- The seal specification of a NEMO® pump is recorded on the order confirmation sheet.
- Pumps fitted with direction dependent seals should **never** be run in the opposite direction of the rotation arrow.
- If excessive leakages occur the spring tension and the seal surfaces should be checked, and the seal be replaced, if necessary.

Single mechanical seals usually work without any additional equipment. Their application range can be increased by operating them with a rinsing or cooling system.

a) **Quench**, in accordance with ISO 5199, Appendix E, Plan Nos. 08, 09, 10 or 13 or API 610, Appendix D, Plan No. 62.

Quench is the designation commonly used in sealing engineering for an arrangement that applies a non pressurized external fluid to the atmospheric side of a mechanical seal. The quench is used when

- a single mechanical seal will not work or only to a limited extent without auxiliary measures or
- a double mechanical seal with pressurized buffer fluid is not necessary.

Recommended for the following applications:

- Low temperature (danger of freezing)
- Operation in a vacuum (dry running)
- Media which must be isolated from the atmosphere (eg. due to build up of solid deposits or because of less severe damage to the environment, like smell).

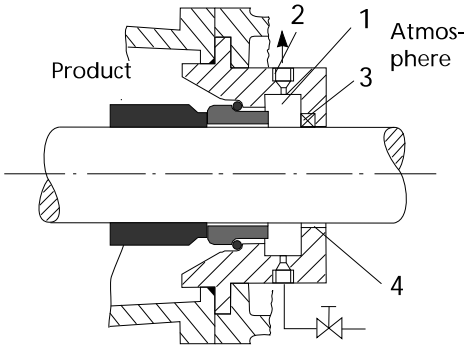

Continued Page 7.5R

Leakages will be transportet away by the quenching liquid.
In vacuum operation dry running of the seals is avoided.



No pressure higher than that of the pumped medium **in front** of the mechanical seal is allowed to build up in the quenching area (1) **behind** the mechanical seal. Otherwise the counter ring will be pushed out of the housing. **Free discharge** from (2) is necessary!

Closing off the quenching area from the atmosphere can be done in three ways:

1. In the case that high emission levels can be tolerated:
   Through a throttle bush (4). Cooling liquid not permanently used, only released from time to time.
2. In the case that medium emission levels can be tolerated:
   By a radial shaft seal ring (3). Permanent radial shaft seal lubrication through quenching liquid is necessary.

b) **Top lubrication**

Attention: For vertically installed pumps with overhead drive as type NT:

On initial start-up the mechanical seal has not come in contact with the medium. It runs therefore dry for a short period of time until the air is displaced from the pump housing.

- On first start–up and if stood idle for longer periods lubricate the mechanical seal before switching on the pump.
- Apply water, glycerine or oil depending on their compatibility with the pumping medium and the elastomer of the mechanical seal.
- Fill the quench cup of the mechanical seal housing.

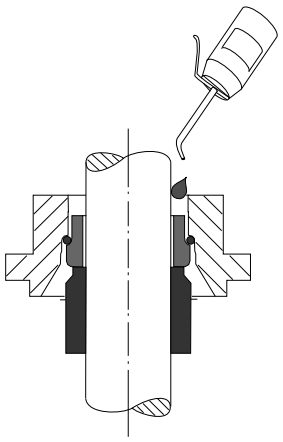

8 Trouble-Shooting and Remedying

8.1 Trouble Chart

The chart overleaf lists possible problems

- the type
- the likely reason / cause
- the remedy.

- A problem may have various causes: Several boxes in the vertical column are marked with a cross.
- A reason/cause may result in various problems:
  Several boxes in the horizontal column are marked with a cross.

8.2 How do you trace the kind of problem to find the possible cause ?

- The column describing a possible problem shows one or several boxes marked with a cross.
- On the corresponding lines you will find the possible reasons/cause and some hints how to handle the problem .
  Thus the actual cause of the problem can be narrowed down and eventually detected.
- If you find further cross-marked boxes on one of the lines and should there appear corresponding problems as well, then the likely cause of the problem has been detected.

- The table helps in finding the root of the problem and will give you the remedy if it is straight forward. For more complicated problems the manufacturer has to be consulted.

Continued Page 8.0R

The NEMO®-pump is a well established product which was thoroughly tested before leaving the factory. If you use the pump in keeping with your Order Specification and treat it in accordance with our Operating and Maintenance Instructions, it will run satisfactorily for a long period of time.

Possible Problems											
The pump is no longer starting	The pump is no longer sucking	The pumped medium is too little	The pressure is too low	The pumped medium is unstable	The pump is running loudly	The pump is stuck	The drive is overloaded	The stator life time is too short	The rotor life time is too short	The shaft seal is leaking	**Possible Causes** (Remedy overleaf)
X							X				In new pumps or stators : the static friction is too great.
X		X	X				X				The pump electrical equipment is not compatible with the electrical supply.
		X					X	X	X		The pressure is too high.
X						X	X				There are foreign bodies in the pump.
X						X	X	X	X		The temperature of the liquid medium is too high, the stator is too ductile.
X						X	X	X			The stator has swollen, the elastomer is not compatible with the medium.
X						X	X	X			The solids content of the medium is too high and leads to blockages.
X						X	X	X	X	X	The liquid medium sediments or hardens when left to stand.
		X	X	X							There is air in the suction pipe.
	X	X	X	X							The suction pipe is leaking.
	X	X	X	X							The shaft seal is leaking.
		X	X								The rpm is too low.
	X	X	X								With reduced diameter rotors : operating temperature has not been reached.
		X	X	X	X			X	X		The suction is too great or pressure too low (cavitation).
		X	X		X	X	X	X			The pump is running dry.
	X	X	X		X						The stator is worn out, or temperature of liquid is too low.
	X	X	X		X			X	X		The stator material is brittle.
	X	X	X		X			X			The rotor is worn out.
					X						The joints are worn out.
					X						The pump and drive are not axially aligned.
					X						The elastic element of the coupling is worn out.
					X					X	The roller bearings are destroyed.
							X				The rpm is too high.
							X				The viscosity is too high.
							X				The specific weight of the medium is too high.
							X			X	The stuffing box is incorrectly tightened.
										X	The packing is not suited to the liquid medium.
	X									X	Mechanical seal : rotation is incorrect.
										X	Mechanical seal : mechanical seal and mating ring have failed.
										X	Mechanical seal : elastomers damaged, swollen or brittle.

Remedy
Fill the pump up, then pump through manually using a suitable appliance; if necessary use glycerine as lubricant in the stator.
Check order information. Examine electrical installation (possibly 2 phase operation).
Measure the pressure with a manometer and check against order details. Reduce the pressure or change the drive.
Remove foreign bodies and eliminate possible damage.
If the liquid medium temperature cannot be lowered, use a reduced diameter rotor.
Check whether the liquid medium agrees with the order requirements. Possibly change stator material..
Increase the liquid part of the medium.
Clean the pump and rinse through after each run.
Increase the suction liquid level, prevent turbulance and air bubbles at the inlet.
Check seals and tighten pipe connections.
Stuffing box : tighten or renew. Mechanical seal : renew seals, eliminate solid deposits.
In the case of adjustable drives : increase the rpm. If necessary change the drive.
Warm up the pump (stator) to operating temperature first of all.
Decrease suction resistance, lower the temperature of the liquid medium, install the pump at a lower location.
Fill up the pump, provide for dry running protection, move the pipes.
Replace with a new stator or ensure correct liquid temperature.
Fit a new stator. Check the liquid medium agrees with order details; if necessary change the stator material.
Change rotor, establish the cause. Wear and tear, corrosion, cavitation; if necessary change to a different material or coating.
Replace relevant parts, carefully reseal and lubricate.
Re-align the unit.
Use a new connection and re-align the pump.
Replace roller bearings, lubricate, reseal. At higher temperatures observe the lubricant and the bearings.
In the case of adjustable drives : lower the rpm.
Measure the viscosity and compare with order details. If necessary adjust viscosity or change the drive.
Measure specific weight and compare with order details. If necessary adjust specific weight or change the drive.
Service stuffing box according to page 7.4, if necessary renew worn shaft.
Replace fitted packing with another packing type.
Change electrical connection.
Replace relevant rings with new ones.
Replace elastomers. Check whether the liquid medium agrees with order details, if necessary change material.

9 Removal and Fitting of End Stud, Stator and Pump Housing



The pump with attached pipework should be empty and must have cooled off!
Disconnect the pipework on the suction side and pressure side of the pump.

Caution for pumps with ceramic rotors!



Where a pump is fitted with a **ceramic** rotor (1999) the following operations should be carried out **with great care.**
Do not use any force or sharp tools! Special care must be taken to prevent heavy strokes, vibrations or impact by a hammer.

Dismantling

- Remove the securing screws (S) from support feet (2035) to baseplate (G).

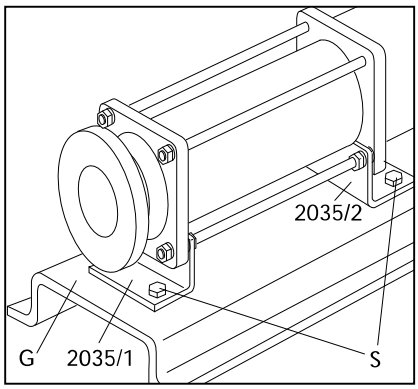

- Unscrew the hex nuts A (3020) and remove with spring washers (3015), then withdraw the end stud (2005) and first support foot (2035/1) with washers (3070).

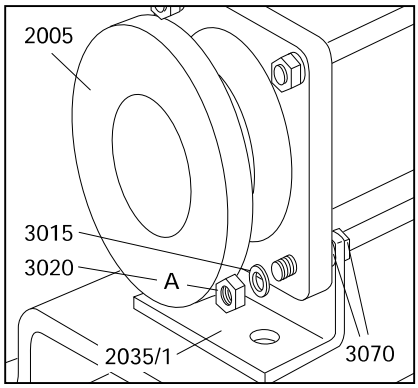

Continued Page 9.0R

9 DISMANTLING AND ASSEMBLY OF THE PUMP HOUSING

- Support pump housing (2010) and stator (3005) with wooden blocks.
- Loosen the hex nuts B (3020), where fitted, and remove the thru bolts (3010).

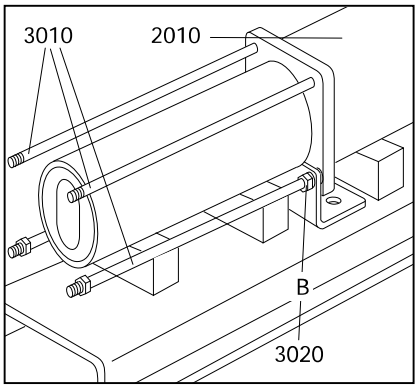

- Where fitted, remove the second support foot (2035/2) and the washers (3070).

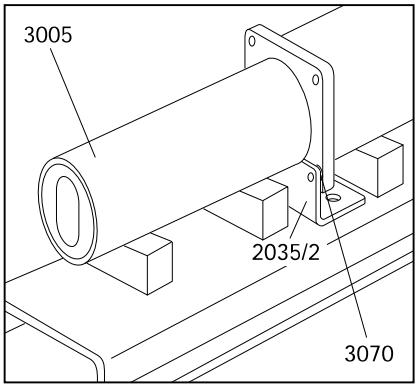

Caution for pumps with ceramic rotors!

When the stator (3005) is removed from the **ceramic** rotor (1999), the stator must be supported to prevent it from suddenly tilting away downwards. The same applies to the rotor (1999) as soon as it is disengaged from the stator (3005). Removing the stator (3005) from the **ceramic** rotor (1999) is easier by using an extractor. This should be done slowly and with care in a rotating movement. When sliding pump housing (2010) over **ceramic** rotor (1999), both coupling rod (1998) and rotor (1999) should be lifted as the **ceramic** rotor (1999) must not knock onto the pump housing (2010).

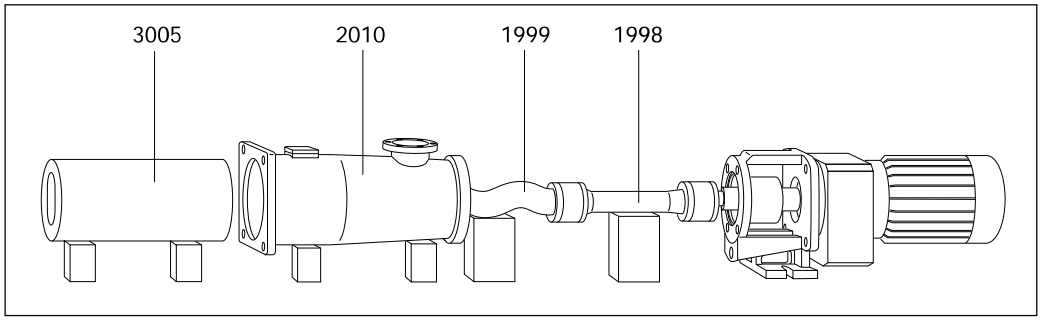

Continued Page 9.1

Caution for pumps with tubular rotors:

Where the walls of tubular rotors are worn in the wear zones, pumping medium may occur inside the rotor and may come out when pulling off the stator.
Ensure that protective measures have been taken when pumping dangerous media!

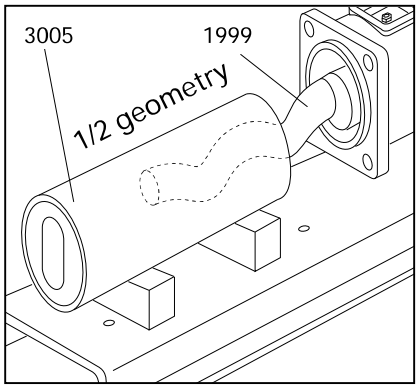

- Pull the stator (3005) out forward.
  A stator extractor can be supplied as special accessory.

- Remove the hex nuts (2030) with spring washers (2025).
- Pull the pump housing (2010) off forward.

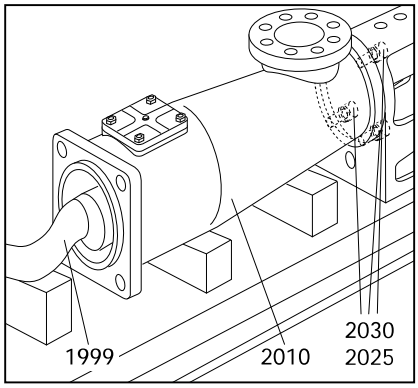

Assembly

- Refitting is a simple reversal of this procedure.

  When refitting the stator (3005) check direction of stator (3005) is correct! The funnel-shaped inflow side (E) of the stator (3005) must show to
  - the pump housing (2010) when rotation is **anti-clockwise**
  - the end stud (2005) when rotation is **clockwise**

  when viewed on pump shaft end.

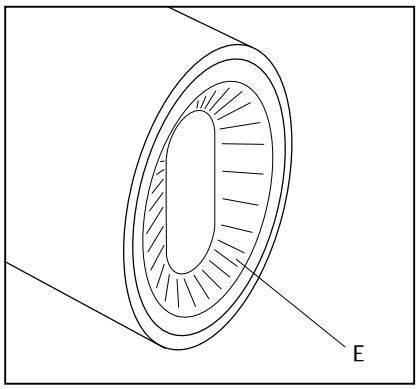

- **Elastomer stators (A)** have integrated front side sealing profiles (D). They don't need additional gaskets for sealing off the end stud (2005) and the pump housing (2010).

- **Solid stators (B)** have **no** integrated front side sealing profiles. Therefore additional gaskets (8005) should be installed to seal off the end stud (2005) as well as the pump housing (2010).

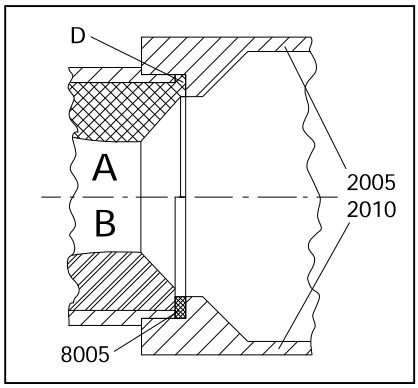

Continued Page 9.1R

9 DISMANTLING AND ASSEMBLY OF THE PUMP HOUSING



Be careful when engaging the stator (3005) and rotor (1999). Do not trap your fingers!
Do not reach inside the stator!

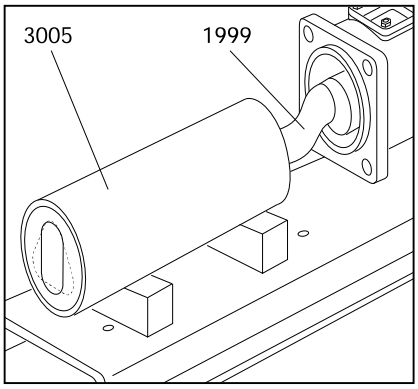

- Push the stator (3005) with a rotating movement on to rotor (1999).
  Apply an assembly device and some glycerine to ease engaging the stator (3005) and rotor (1999).

- When tightening hex nuts (2030) a gap will remain between drive stool (0085) and pump housing (2010).



Please do not try to close this gap by overtightening the nuts!
Drive stool (0085) may break!

Torque values for hex nuts (2030):

Size	M6	M8	M10	M12	M16	M20	M24	M30
Required torque Nm	8	15	30	45	75	80	100	120

- Fastening the end stud (2005):

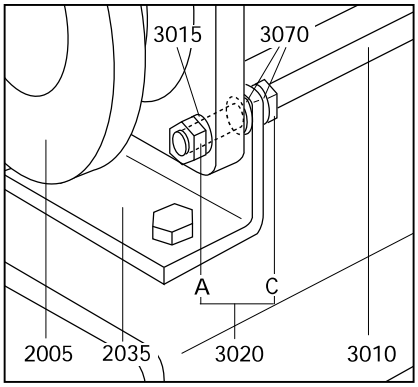

Screw the hex nuts C (3020) down into the thru bolts (3010) as far as possible.
Slip on the first washers (3070), the support foot (2035), the second washers (3070), the end stud (2005) and tighten with spring washers (3015) and hex nuts A (3020).
Finally, fasten the support foot (2035) from behind with the two hex nuts C (3020).

Ensure during refitting that the O-ring (8015) or, where a heating jacket (3025) is installed, the O-rings (8030) are in perfect condition and will sit correctly.



Ensure that the drain plug (2015) is not screwed too tightly into the pump housing (2010), since otherwise its conical thread may break the pump housing (2010).
The torque should be about 40 - 50 Nm.

10 Dismantling and Assembly of the Rotating Parts with Pin Joints with SM-Pin Joint Seal (basic joint size NM015 - NM125)

10.1 Removal of Rotor and Coupling Rod

Where a pump is fitted with a **ceramic** rotor (1999) the following operations should be carried out **with great care.** Do not use any force or sharp tools! Special care must be taken to prevent heavy strokes, vibrations or impact by a hammer.
For removal of the rotor (1999) and coupling rod (1998) the pin joints should be dismantled as follows:

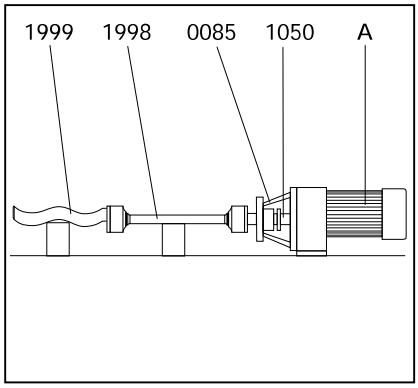

- Place the dismantled unit – consisting of drive stool (0085) with drive (A) and connecting shaft (1050), coupling rod (1998) and rotor (1999) – on the work-bench with a wooden block supporting the rotor (1999).

Basic joint size NM125:

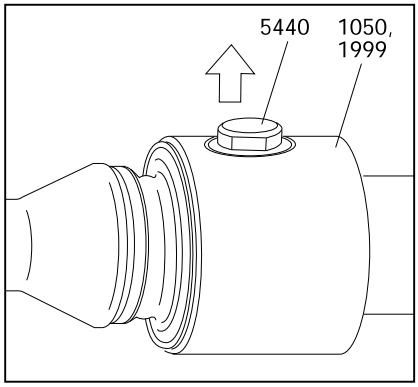

- Unscrew the wear sleeves (5440) from the head of rotor (1999) or connecting shaft (1050)

Basic joint size NM021 - NM105:

- Push circlip (5065) out of its groove and slip off over the head of rotor (1999 or connecting shaft (1050).

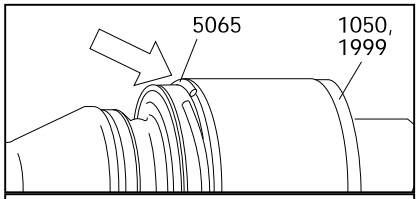

Pumps fitted with a ceramic rotor (1999):

- **Carefully** turn safety sleeve (5115) with a squeeze belt wrench, and remove.

The following method should **not** be employed for pumps fitted with a **ceramic** rotor.

Pumps fitted with a metallic rotor (1999):

- If necessary hit the edge of sleeve (5115) at an angle with the help of a wooden block and a plastic hammer. Taking care not to damage the O-rings (8060)!

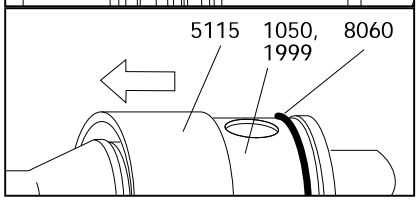

Continued Page 10.0R

10 DISMANTLING AND ASSEMBLY OF THE ROTATING PARTS

Basic joint size NM021 - NM125:

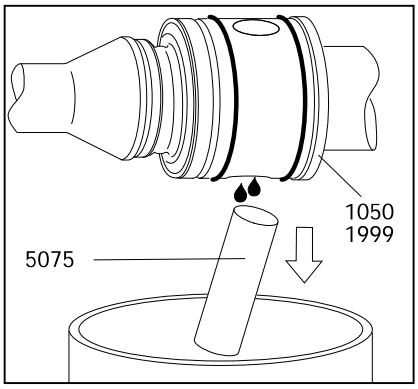

- Press the pin (5075) out of the head of rotor (1999) or connecting shaft (1050). If necessary use a hammer and a thin cylindrical pin (DIN 6450 C).
  Drain the oil into a receptacle.

  Caution for pumps with ceramic rotors!

  Where a pin (5075) may not come out easily, the metallic head of rotor (1999) should be supported on wooden blocks. Then the pin (5075) can be driven out with the help of a pin punch (DIN 6450 C). This should be done **with care**, holding the **ceramic** rotor with your hands.
  Please dispose of this oil in the proper manner.

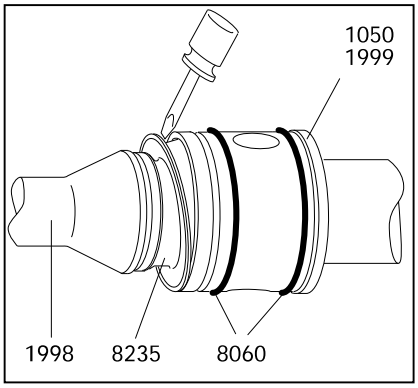

- Using a screwdriver, carefully lever the SM-pin joint seal (8235) out of the head of rotor (1999) or connecting shaft (1050).



Taking care not to damage the SM-pin joint seal (8235)!

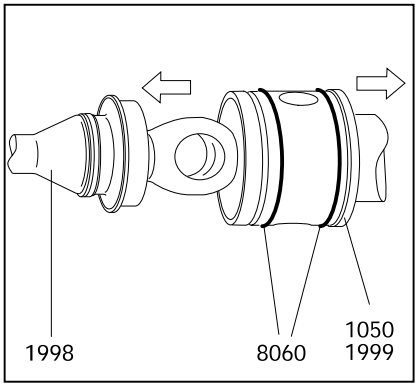

- Pull apart the rotor (1999)/ coupling rod (1998) / connecting shaft (1050) assembly. Remove the O-rings (8060).

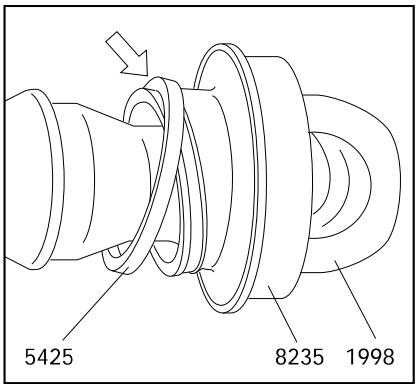

- Push the SM-pin joint seal (8235) towards the head of coupling rod (1998). In the narrow coupling rod section press the clamp ring (5425) out of the groove of the seal. Then slip the SM-pin joint seal (8235) and clamp ring (5425) off over the head of the coupling rod (1998).

Continued Page 10.1

10.2 Fitting the Rotor and Coupling Rod

For fitting the rotor (1999) with coupling rod (1998), the two pin joints should be assembled as follows:

- Slip the clamp ring (5425) over the head of coupling rod (1998).

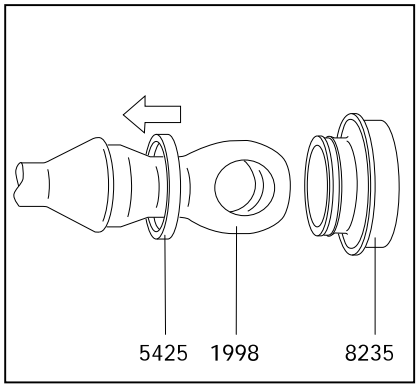

- Push the SM-pin joint seal (8235) over the head of coupling rod (1998) towards its narrow section, there sqeezing the clamp ring (5425) into the groove of the SM-pin joint seal (8235).

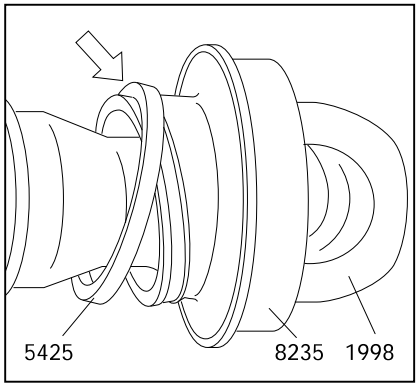

- Push the SM-pin joint seal (8235) with the correctly placed clamp ring (5425) up to the shoulder of coupling rod (1998).

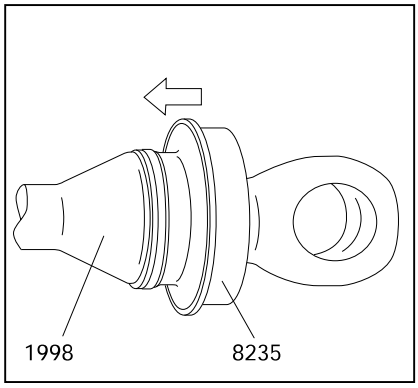

Continued Page 10.1R

10 DISMANTLING AND ASSEMBLY OF THE ROTATING PARTS

Basic joint size NM021 - NM105:

- Slip the circlip (5065) on to the coupling rod (1998). Slide the sleeve (5115) on to coupling rod (1998) so the inside diameter of chamfering (A) is being placed towards the coupling rod (1998) extension. Chamfering (A) will later on ease the installation over the O-rings (8060).
  Orient the head of coupling rod (1998) until it is in vertical position for the bore (B) for the pin (5075).

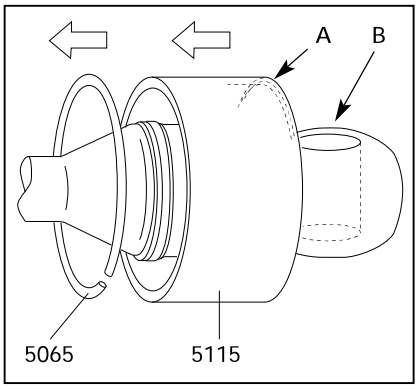

- Slide the coupling rod (1998) with SM-pin joint seal (8235) into the bore of rotor (1999) or connecting shaft (1050) and insert the pin (5075) from below and push up to the upper edge of coupling rod (1998).
  Support the pin (5075) against dropping out.
  Slide the SM-pin joint seal (8235) into the rotor (1999) or connecting shaft (1050) only from below, and in a slightly slanted position.

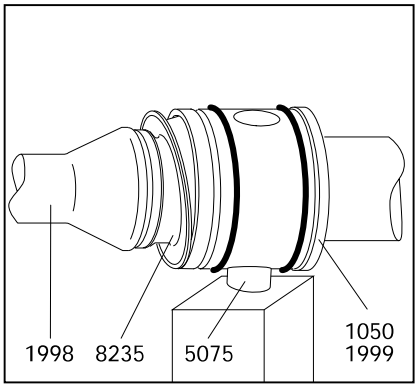

- For lubrication, use an oil can which should be fitted with a thin plastic hose having an outside diameter of not more than 4 mm.
  Insert this hose into the upper oil port opening in the rotor (1999) or connecting shaft (1050). Then slide the hose end past the coupling rod (1998) all the way down to the bottom section of the rotor head (1999) or connecting shaft (1050).
  Slowly fill with lubricating oil up to the filling port.

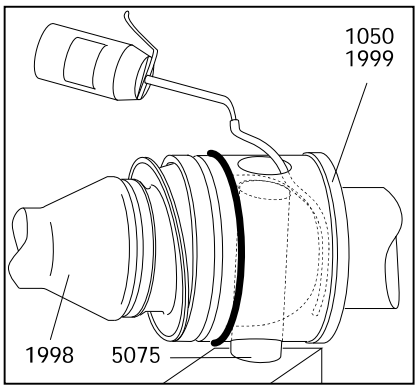

- Pull the hose out.
  Then insert the hose end through the small gap on the topside of SM-pin joint seal (8235) and guide it down to the bottom of the hollow space between coupling rod (1998) and SM-pin joint seal (8235).
  Slowly fill with lubricating oil up to the gap.

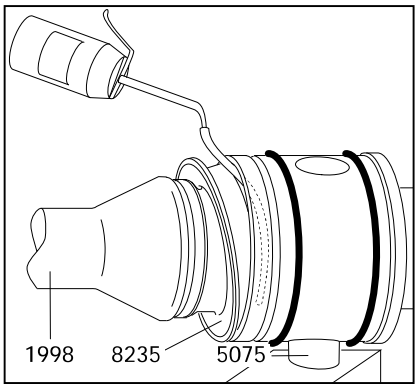

Continued Page 10.2

- Pull the hose out.
  Push the pin (5075) entirely into the bore of head of rotor (1999) or connecting shaft (1050) and retain in place.
  Only now, press the SM-pin joint seal (8235) into the bore of head of rotor (1999) or connecting shaft (1050) and push up to the shoulder. In doing so the SM-pin joint seal (8235) should be slightly bulbous around the outer surface. Wipe off overflow oil. Use this oil for lubricating the O-rings (8060).

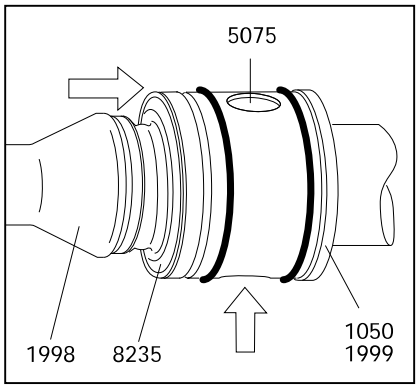

- Slip the sleeve (5110) or (5115), with its chamfering (A) forward, on to the head of rotor (1999) or connecting shaft (1050) and push up to the shoulder.

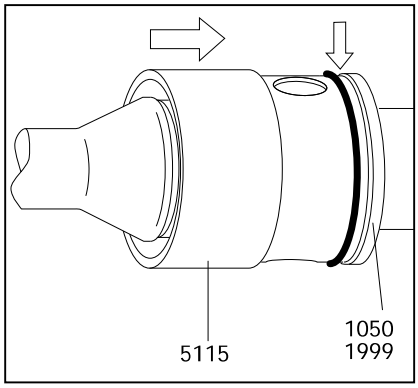

- Place the circlip (5065) into its groove on the rotor head (1999) or connecting shaft (1050) and carefully snap in place all around.

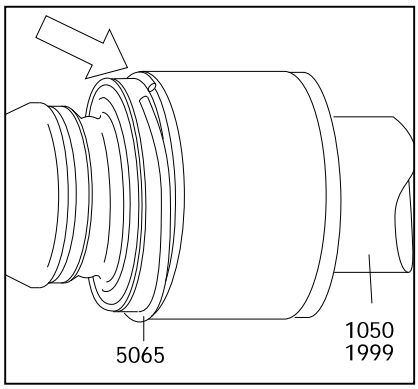

- **Basic joint size NM125:**

  Slide the coupling rod (1998) into the bore of the head of rotor (1999) and connecting shaft (1050) and insert the pins (5075).
  Insert the SM-pin joint seal (8235) (8235) into the head of rotor (1999) and connecting shaft (1050).
  Only then screw in one wear sleeve (5440) with O-ring (8060) into the head of rotor (1999) and connecting shaft (1050) and turn upside down.

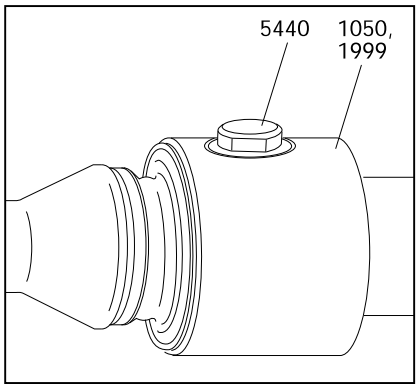

10 DISMANTLING AND ASSEMBLY OF THE ROTATING PARTS

- For lubrication, use an oil can which should be fitted with a thin plastic hose having an outside diameter of not more than 4 mm.
  Insert this hose into the upper oil port opening in the rotor (1999) or connecting shaft (1050). Then slide the hose end past the coupling rod (1998) all the way down to the bottom section of the rotor head (1999) or connecting shaft (1050).
  Slowly fill with lubricating oil up to the filling port.

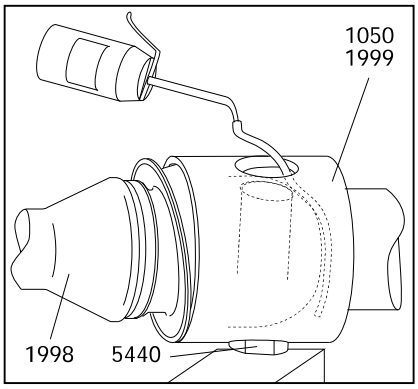

- Pull the hose out.
  Then insert the hose end through the small gap on the topside of SM-pin joint seal (8235) and guide it down to the bottom of the hollow space between coupling rod (1998) and SM-pin joint seal (8235).
  Slowly fill with lubricating oil up to the gap.
- Screw in the second wear sleeve (5440) with O-ring (8060) into the head of rotor (1999) and connecting shaft (1050).

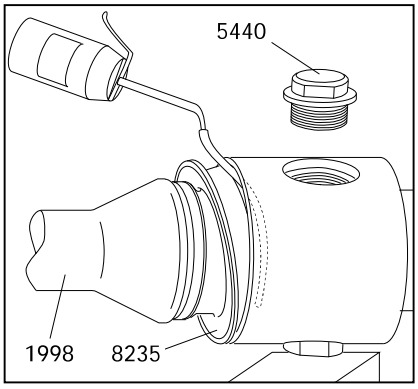

- **Basic joint size NM021 - NM125:**

  Drive connecting shaft (1050), coupling rod (1998) and rotor (1999) are now joined by means of the two pin joints.
  Pump housing (2010), stator (3005) and end stud (2005) may now be fitted.

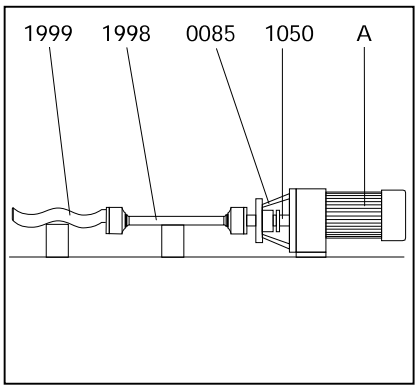

Continued Page 10.3

10.3 Dismantling and Assembly of the Rotating Parts with Pin Joints with SM-Pin Joint Seal (joint basic size NM015)

For removal and refitting of the rotor (1999) and coupling rod (1998) the pin joints should be dismantled and re-assembled as follows:

Dismantling:

- Push the SM-pin joint seal (8235) away from the rotor (1999), drive shaft (1005) or connecting shaft (1050) so the bore for the pin (5075) comes free.

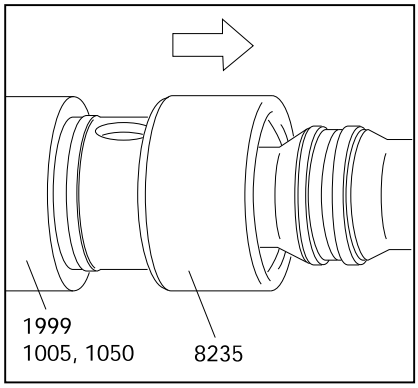

- Press the pin (5075) out of the rotor (1999), connecting shaft (1050) or drive shaft (1005). Then withdraw the coupling rod (1998) from the bore of rotor (1999), connecting shaft (1050) or drive shaft (1005).

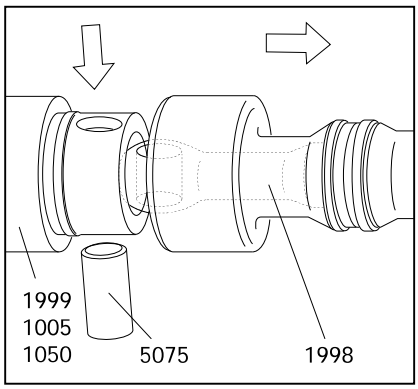

- Push the SM-pin joint seal (8235) towards the head of coupling rod (1998). In the narrow coupling rod section press the clamp ring (5425) out of the groove of the seal. Then slip the SM-pin joint seal (8235) and clamp ring (5425) off over the head of the coupling rod (1998).

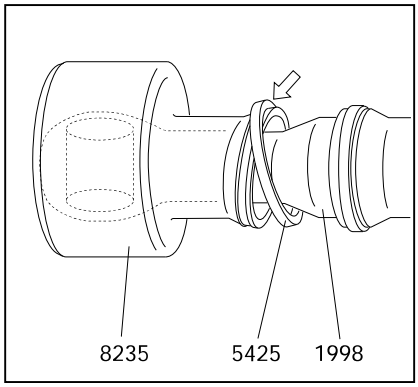

Continued Page 10.0R

10 DISMANTLING AND ASSEMBLY OF THE ROTATING PARTS

Re-Assembly:

- Slip the clamp ring (5425) and the SM-pin joint seal (8235) on over the head of the coupling rod (1998).

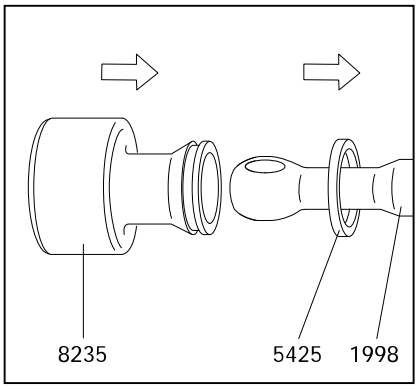

- Push the SM-pin joint seal (8235) towards the narrow section on the head of coupling rod (1998) and place the clamp ring (5425) back into the groove of the SM-pin joint seal (8235).
  Then move the SM-pin joint seal (8235) up to the coupling rod (1998) shoulder.

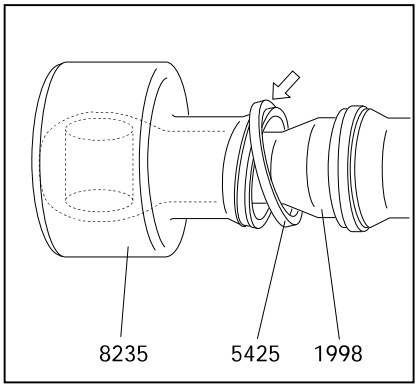

- Place the head of coupling rod (1998) into the bore of the rotor (1999), drive shaft (1005) or connecting shaft (1050).

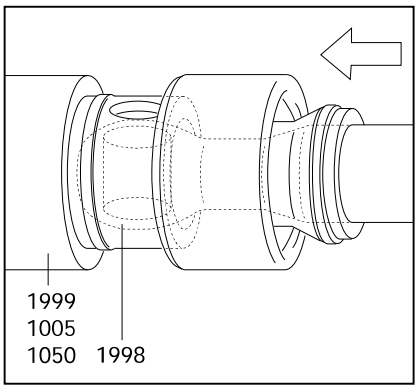

- Join the rotor (1999), drive shaft (1005) or connecting shaft (1050) and coupling rod (1998) by the pin (5075).
  Then push the SM-pin joint seal (8235) up to the shoulder of the rotor (1999), drive shaft (1005) or connecting shaft (1050).

  Re-assemble the second pin joint in the same manner.

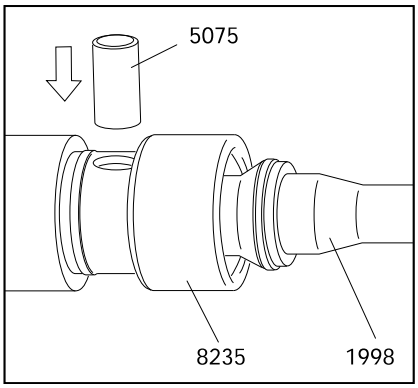

11 Removal and Fitting of the Connecting Shaft with Shaft Seal

Removal:

- Push the circlip (1035) in the direction to the mechanical seal.
- Remove pin (1030).
- Remove the shaft seal housing (7005) and mechanical seal (7010) together with connecting shaft (1050) and set ring (1035) from drive stool (0085) and the drive shaft.
  The thread of cylindrical head screw (1040) can be used as forcing screw.
- If a mechanical seal is installed, see description "Removal and Fitting of Mechanical Seal" after Page 12.0.

Fitting:

- Apply grease into the bore of the connecting shaft (1050) to avoid rust (e.g. TCE-Metallic 600).
- Assemble the shaft seal housing (7005) and mechanical seal (7010) together with connecting shaft (1050) and set ring (1035) with drive stool (0085) and push connecting shaft (1050) on to the drive shaft.
  At this please observe the installation direction of set ring (1035) (please see mark).
- If a mechanical seal is installed, see description "Removal and Fitting of Mechanical Seal" after Page 12.0.
- Connect the connecting shaft (1050) and the drive shaft by pin (1030).
  Push set ring (1035) on pin (1030).

12.1 Removal and Fitting of the Single Mechanical Seal

- **Carefully** slide out mechanical seal housing (7005) together with the parts of the mechanical seal contained in it from connecting shaft (1050).
- **Carefully** push mechanical seal (7010) stationary seat out of mechanical seal housing (7005).

Refitting is a simple reversal of the above procedure.

- To reduce frictional forces during seal assembly, apply some glycerine to the shaft and the seal housing in the area of the gaskets.
- Special care must be taken when fitting double PTFE-coated gaskets: the **joint** of the outer coating must point away from the seal assembly direction, otherwise the coating may open or be pulled off!



Ensure that the distribution of pressure is uniform when inserting the pressure sensitive counter rings. When inserting larger rings, use a suitable mandrel.
Do not allow any foreign bodies to get between the sliding surfaces.

- Exactly keep to the seal installation dimensions and ensure that the sealing faces are correctly pressed together (see table on sectional drawing W 209.000 or W 210.000).
- Insert mechanical seal (7010) stationary seat into mechanical seal housing (7005).
- Insert mechanical seal housing (7005) together with the stationary seat into the drive stool **without the installed connecting shaft (1050).**
- If necessary take the installation dimension from the table and add the thickness S of the set ring (7086) when existing.
- Mark this installation dimension on the connecting shaft (1050).
- Fix the rotating unit of the mechanical seal (7010) on the connceting shaft (1050) depending on the installation dimension so that the rotating unit of the mechanical seal (7010) or the set ring (7086) is at the mark.
- Insert connecting shaft (1050) with the rotating unit of the mechanical seal (7010) into drive stool (0085) and install lip seal (7091, if existing. Push the set ring (1035) on to connecting shaft (1050) and observe at this the installation direction (see mark).
Push connecting shaft (1050) on to the drive shaft and connect with pin (1030). Push the set ring (1035) on pin (1030).

Inspection Opening at the Pump Housing

gray cast iron model on from size NM045

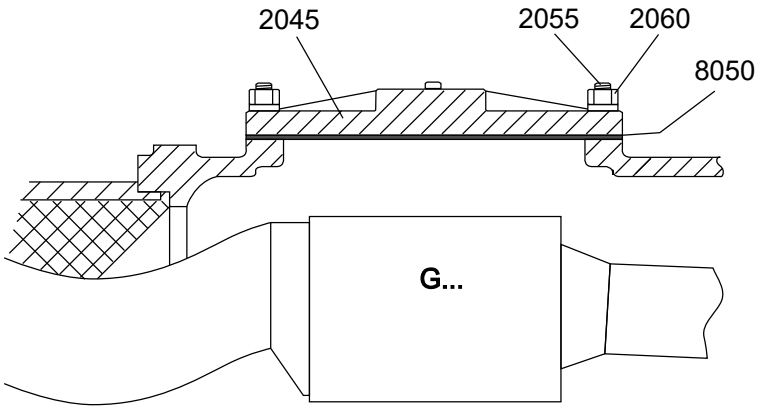

design for welded housings – nominal size DN 76,1 – ISO 2852

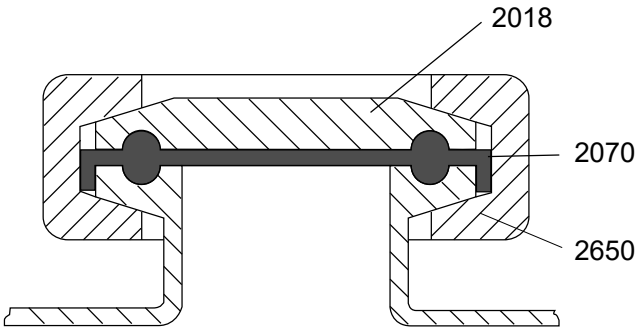

14 Recommended Spare Parts

In general, we have all spare parts in stock. Our subsidiaries and exclusive representatives also hold a certain stock. For special cases and when short waiting periods are not acceptable, we recommend to keep an amount of spare parts, corresponding to the pump, in stock on site (please see table below).

- **Rotor**
- **Stator**
- **Elastomer parts as O-rings and sleeves**
- **joint parts**
- **shaft seals.**

To avoid mistakes in delivery, please identify the parts by their position number shown in the spare parts list or on the sectional drawing.

For placing a spare parts order, it is absolutely necessary to give the following details:

Pieces (see column 2) - Designation (see column 3) - Identification Number (see column 4)

The column details are taken from the spare parts list. See example.

Example:

SPARE PARTS LIST		10.05.94		10:50:18	Page: 1 / 5
1		2		3	4
PART EURO	POS.	Quantity	Unit	Designation Size – Norm – Material/Surface	Ident-Number
3410	0005	1,000	pc	bearing housing	850221
2910	0010	1,000	pc	distance sleeve	850220
3520	0015	1,000	pc	bearing cover	850222

15 Sectional Drawings and List of Spare Parts

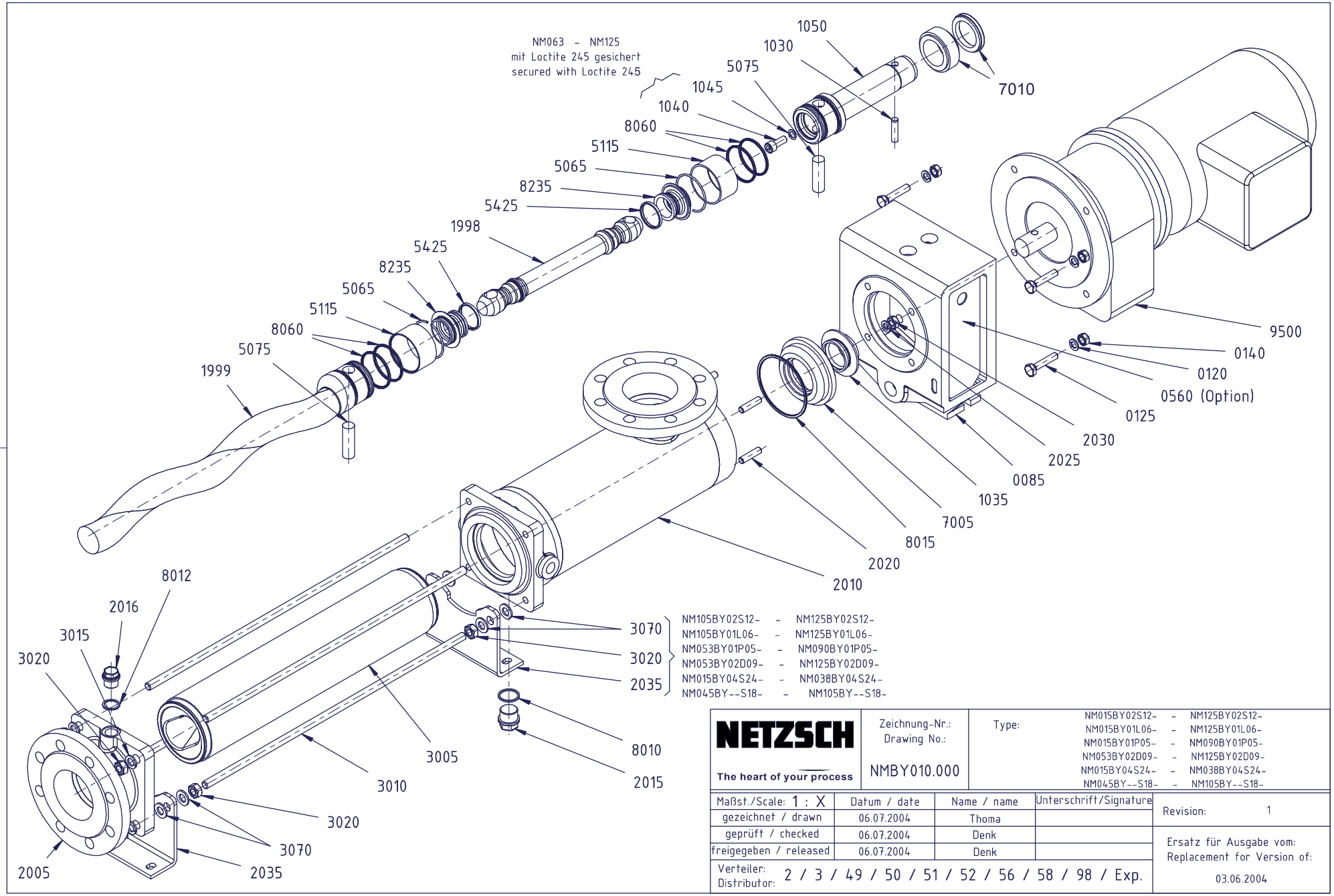

NETZSCH

The heart of your process

Zeichnung-Nr.: Drawing No.:	NMBY010.000
Type:	NM015BY02S12- - NM125BY02S12- NM015BY01L06- - NM125BY01L06- NM015BY01P05- - NM090BY01P05- NM053BY02D09- - NM125BY02D09- NM015BY04S24- - NM038BY04S24- NM045BY--S18- - NM105BY--S18-

Maßst./Scale: 1 : X	Datum / date	Name / name	Unterschrift/Signature
gezeichnet / drawn	06.07.2004	Thoma	
geprüft / checked	06.07.2004	Denk	
freigegeben / released	06.07.2004	Denk	

Verteiler: Distributor: 2 / 3 / 49 / 50 / 51 / 52 / 56 / 58 / 98 / Exp.

Revision: 1

Ersatz für Ausgabe vom: Replacement for Version of: 03.06.2004

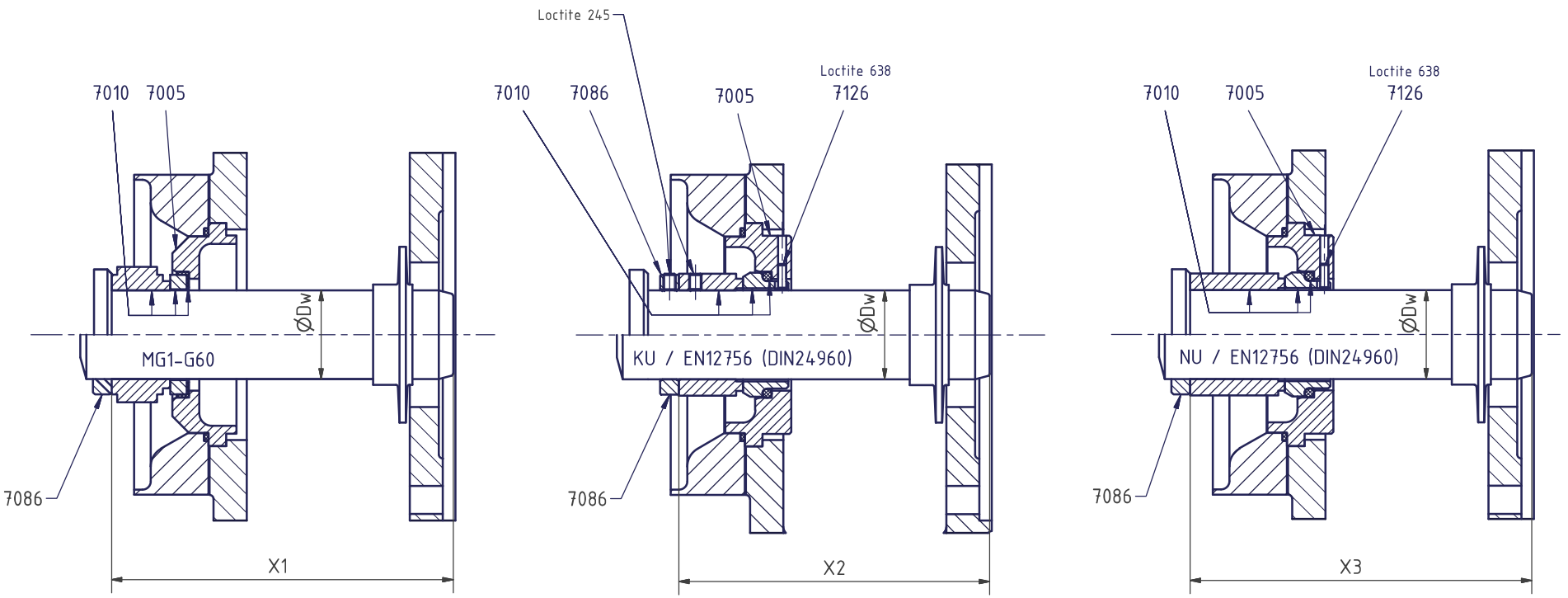

Dw 35 - Dw 100

Dw	MG1-G60	KU / EN12756 (DIN24960)	NU / EN12756 (DIN24960)
	X1	X2	X3
25	116,5	116,5	–
35	152,1	139,6	152,1
40	147,5	137,5	147,5
43	165,5	150,5	165,5
55	181	158,5	181
65	201,5	174	201,5
70	207	187	207
85	219	189	219
100	249	224	249

NETZSCH

Zeichnung-Nr.: Drawing No.: W209.000

Einf. wirk. GLRD
Single Mechanical Seal

Type: NM015B/S- (P) - NM105B/S- (P)

Maßst./Scale: 1 : X	Datum / date	Name / name	Unterschrift/Signature
gezeichnet / drawn	29.07.2011	Thoma	
geprüft / checked	29.07.2011	Denk	
freigegeben / released	29.07.2011	Denk	

Verteiler: Distributor: 2 / 3 / 49 / 50 / 51 / 52 / 58 / 94 / 95 / 97 / 98 / exp

Revision: 5

Ersatz für Ausgabe vom: Replacement for Version of: 20.08.2009

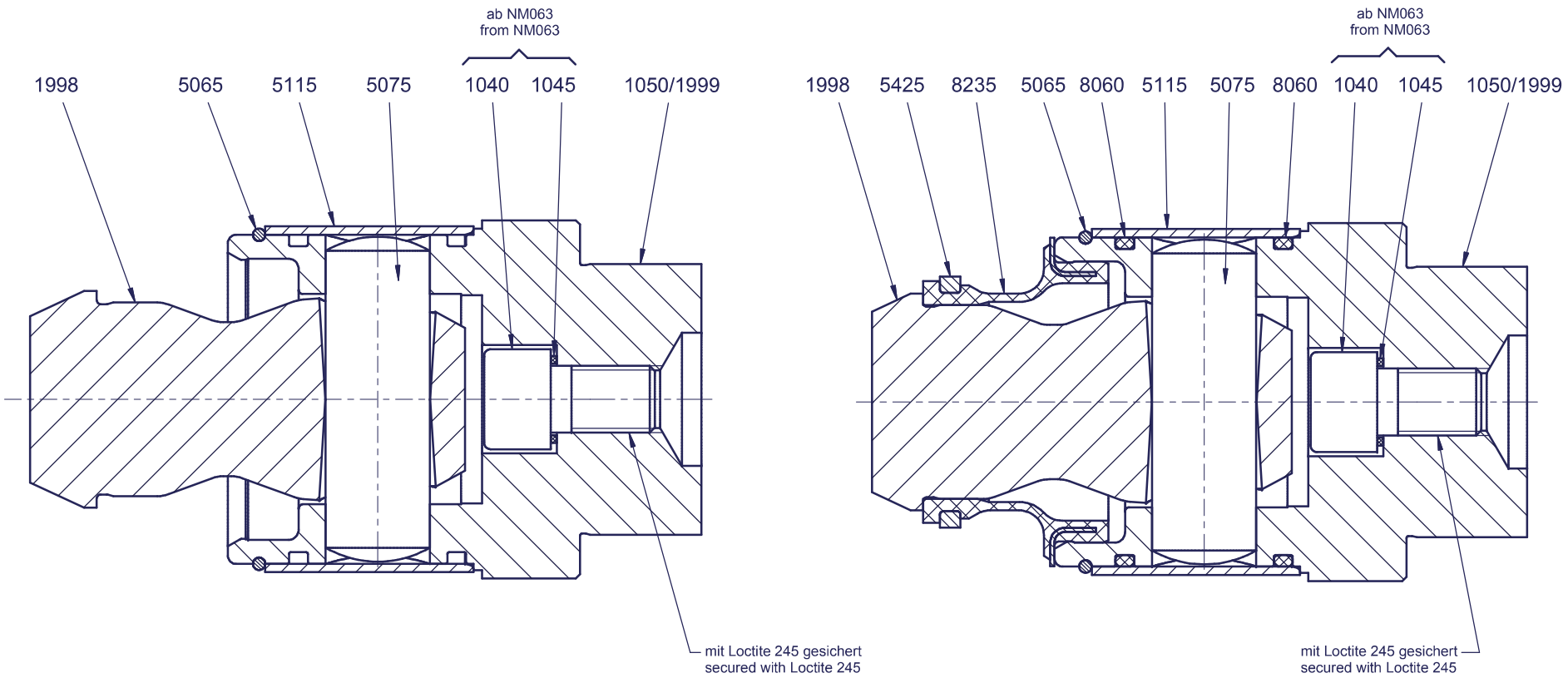

nur/only NM015B- (P)

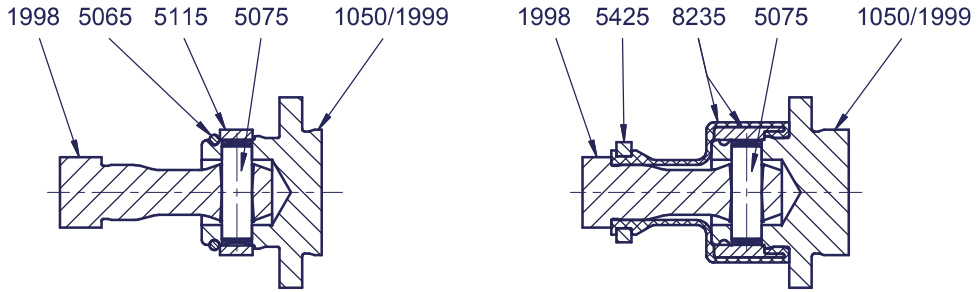

NETZSCH The heart of your process	Zeichnung-Nr.: Drawing No.: G146.000	Bolzengelenk ohne/mit SM-Bolzenabdichtung Pin Joint without/with SM-Pin Joint Seal			Type: NM015B- (P) - NM105B- (P)
Maßst./Scale: 1 : X	Datum / date	Name / name	Unterschrift/Signature	Revision:	1
gezeichnet / drawn	14.10.2003	Preintner			
geprüft / checked	14.10.2003	Thoma		Ersatz für Ausgabe vom: Replacement for Version of:	
freigegeben / released	14.10.2003	Thoma			
Verteiler: Distributor:	2 / 3 / 50 / 51 / 52 / 58 / 98			23.05.2003	

Inquiry/Order Form

NETZSCH

►Please copy before use

☐ Inquiry ☐ Order

NETZSCH Canada, Inc.
500 Welham Road
Barrie, ON, L4N 8Z7

Tel: 1-705-797-8426
Fax:1-705-797-8427
ntc@netzsch.com
www.pumps.netzsch.com

Company Address

Person in Charge

Tel:

Fax:

Delivery address

Billing address

Important: Please fill in		
Machine #	Pump Com #	Type
Quantity	Pos. No.	Description

Required delivery date_____

Address_____

Date_____ Signature/co. stamp_____

DATA SHEET

Three Phase Induction Motor - Squirrel Cage

Customer	:

Product line	: NEMA Premium Efficiency Three-Phase	Product code :	14337968

Frame	: 143/5TC	Cooling method	: IC411 - TEFC
Insulation class	: F	Mounting	: F-1
Duty cycle	: Cont.(S1)	Rotation¹	: Both (CW and CCW)
Ambient temperature	: -20°C to +40°C	Starting method	: Direct On Line
Altitude	: 1000 m.a.s.l.	Approx. weight³	: 31.5 kg
Protection degree	: IP55	Moment of inertia (J)	: 0.0041 kgm²
Design	: B		

Output [HP]		1
Poles		4
Frequency [Hz]		60
Rated voltage [V]		575
Rated current [A]		1.14
L. R. Amperes [A]		9.84
LRC [A]		8.6x(Code M)
No load current [A]		0.748
Rated speed [RPM]		1760
Slip [%]		2.22
Rated torque [kgfm]		0.414
Locked rotor torque [%]		290
Breakdown torque [%]		370
Service factor		1.15
Temperature rise		80 K
Locked rotor time		32s (cold) 18s (hot)
Noise level²		51.0 dB(A)
Efficiency (%)	25%	
	50%	80.0
	75%	82.5
	100%	85.5
Power Factor	25%	
	50%	0.57
	75%	0.70
	100%	0.77

		Drive end	Non drive end
Bearing type	:	6205 2RS	6204 2RS
Sealing	:	Oil Seal	Lip Seal
Lubrication interval	:	-	-
Lubricant amount	:	-	-
Lubricant type	:	Mobil Polyrex EM	

Foundation loads

Max. traction : 27 kgf

Max. compression : 59 kgf

Notes

This revision replaces and cancel the previous one, which must be eliminated.
(1) Looking the motor from the shaft end.
(2) Measured at 1m and with tolerance of +3dB(A).
(3) Approximate weight subject to changes after manufacturing process.
(4) At 100% of full load.

These are average values based on tests with sinusoidal power supply, subject to the tolerances stipulated in NEMA MG-1.

Rev.	Changes Summary	Performed	Checked	Date

Performed by				
Checked by			Page	Revision
Date	17/05/2022		1 / 3	

This document is exclusive property of WEG S/A. Reprinting is not allowed without written authorization of WEG S/A.
Subject to change without notice

Customer :

Thermal protection

ID	Application	Type	Quantity	Sensing Temperature
1	Winding	Thermostat - 2 wires	1 x Phase	155 ºC

Rev.	Changes Summary	Performed	Checked	Date

Performed by				
Checked by			Page	Revision
Date	17/05/2022		2 / 3	

This document is exclusive property of WEG S/A. Reprinting is not allowed without written authorization of WEG S/A.
Subject to change without notice

LOAD PERFORMANCE CURVE

Three Phase Induction Motor - Squirrel Cage

Customer	:

Product line	: NEMA Premium Efficiency Three-Phase	Product code :	14337968

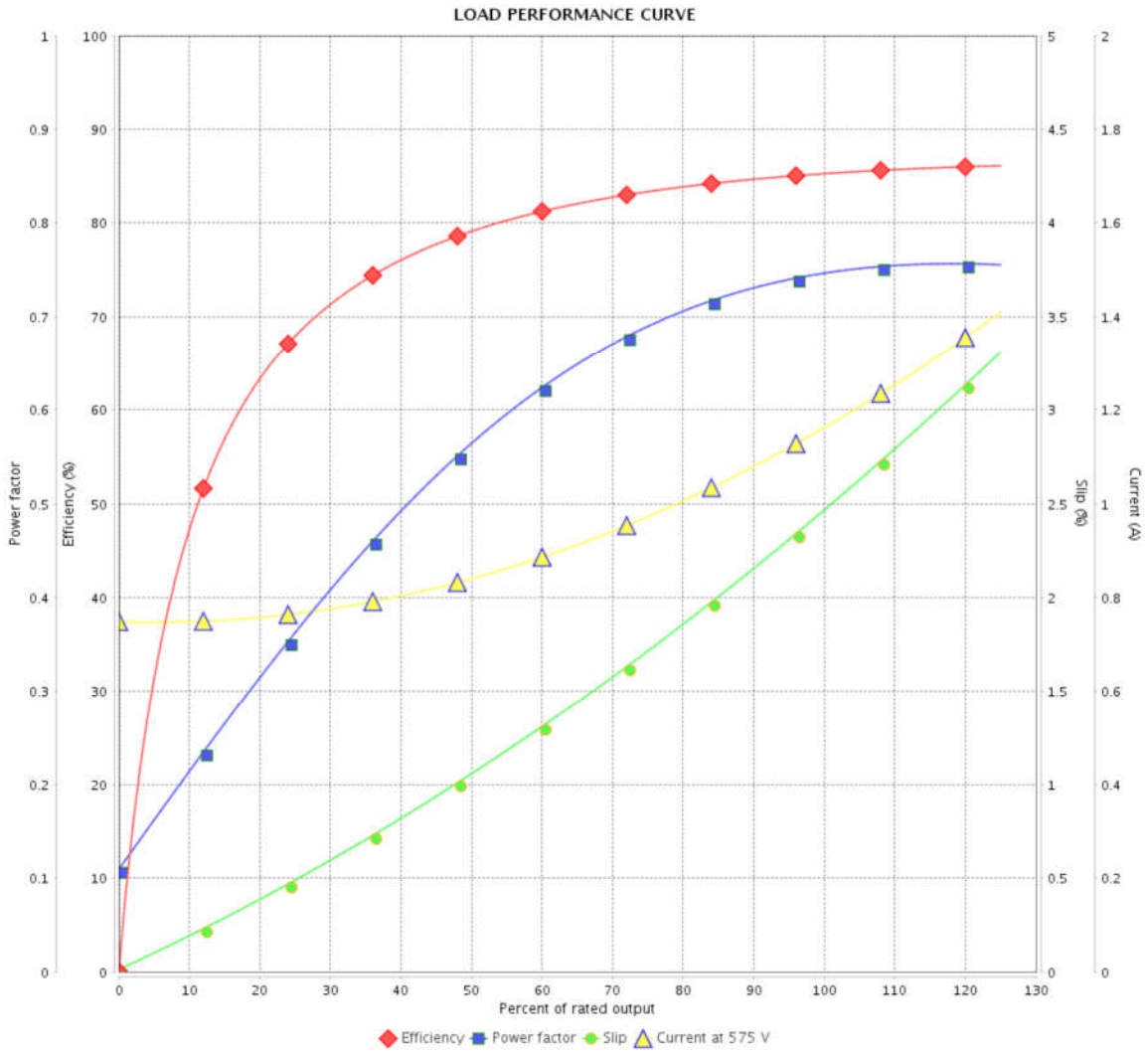

Performance	: 575 V 60 Hz 4P

Rated current	: 1.14 A	Moment of inertia (J)	: 0.0041 kgm²
LRC	: 8.6	Duty cycle	: Cont.(S1)
Rated torque	: 0.414 kgfm	Insulation class	: F
Locked rotor torque	: 290 %	Service factor	: 1.15
Breakdown torque	: 370 %	Temperature rise	: 80 K
Rated speed	: 1760 rpm	Design	: B

Rev.	Changes Summary	Performed	Checked	Date

Performed by				
Checked by			Page	Revision
Date	17/05/2022		3 / 3	

This document is exclusive property of WEG S/A. Reprinting is not allowed without written authorization of WEG S/A.
Subject to change without notice

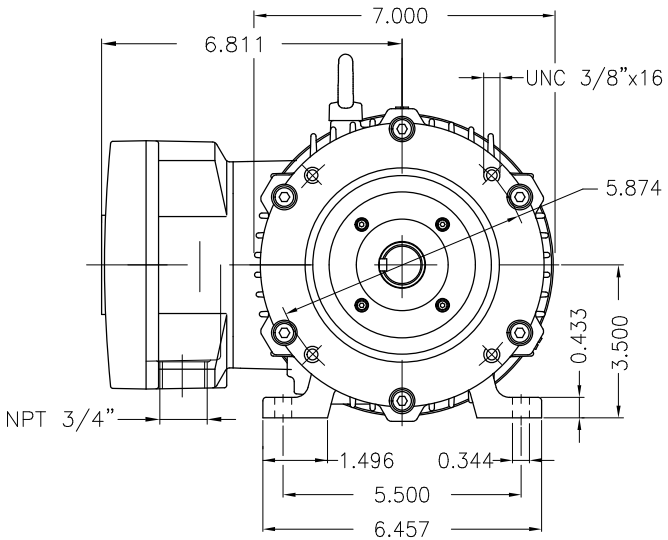

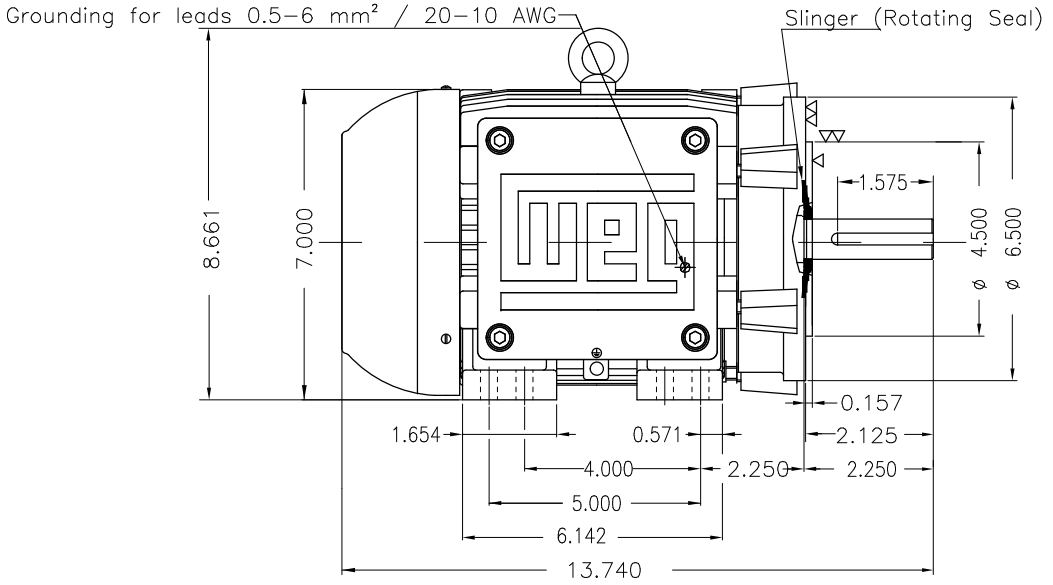

DE Shaft End

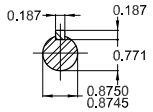

Color RAL 5009
Painting plan 202P
Mounting NEMA F-1
Mounting B34R(D)

1 HP 04 Poles 60 Hz | A

ECM	LOC	SUMMARY OF MODIFICATIONS	EXECUTED	CHECKED	RELEASED	DATE	VER

EXECUTED DATAVIEWERUSER
CHECKED
RELEASED
REL DT.

THREE PH. MOTOR EXPLOSION PROOF PREM. EFF.
FRAME 143/5TC IP55 TEFC

PREVIEW
WDD

WMO Jaragua do Sul Product Engineering

SHEET 1 / 1

Dimensions in Inches
XME A3

WEG's property. Forbidden reproduction without previous authorization.

MOTORS AND DRIVES

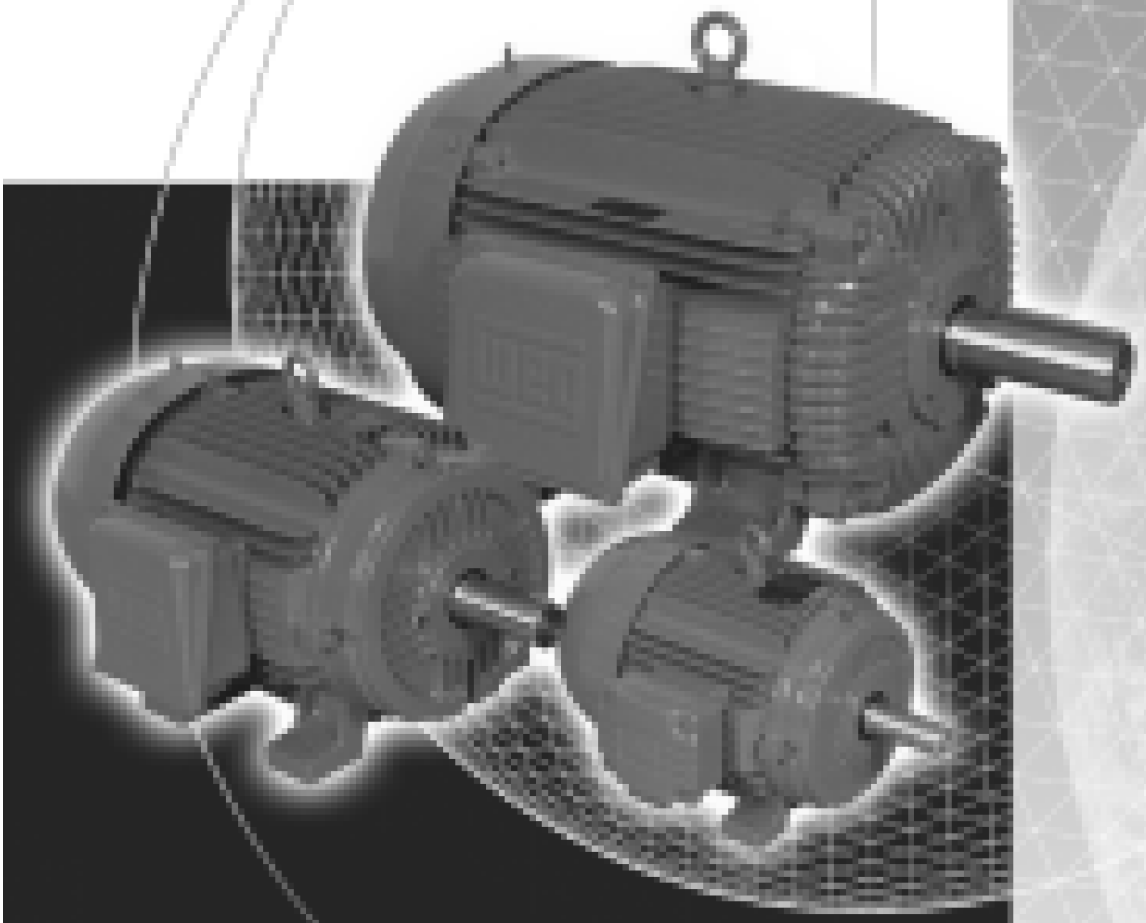

INSTALLATION AND MAINTENANCE INSTRUCTIONS FOR ELECTRIC MOTORS

Frames 143/5T - 586/7T

QUALITY SYSTEM ISO9001 WEG MOTORES

ISO 9001



READ CAREFULLY THIS MANUAL BEFORE INSTALLING THE MOTOR.

RECEIVING CHECK

✓ Check if any damage has occured during transportation.
✓ Check nameplate data.
✓ Remove shaft locking device (if any) before operating the motor.
✓ Turn the shaft with the hand to make sure if it is turning freely.

HANDLING AND TRANSPORTATION

1 - General



MOTORS MUST NOT BE LIFTED BY THE SHAFT, BUT BY THE EYE BOLTS WHICH ARE PROPERLY DESIGNED TO SUPPORT THE MOTOR WEIGHT.

Lifting devices, when supplied, are designed only to support the motor. If the motor has two lifting devices then a double chain must be used to lift it.

Lifting and lowering must be done gently without any shocks, otherwise the bearings can get damaged.



DURING TRANSPORTATION, MOTORS FITTED WITH ROLLER OR ANGULAR CONTACT BEARINGS ARE PROTECTED AGAINST BEARING DAMAGES WITH A SHAFT LOCKING DEVICE.



THIS LOCKING DEVICE MUST BE USED ON ANY FURTHER TRANSPORT OF THE MOTOR, EVEN WHEN THIS MEANS TO UNCOPULE THE MOTOR FROM THE DRIVEN MACHINE.

STORAGE

If motors are not immediately installed, they must be stored in dry places, free of dust, vibrations, gases, corrosive smokes, under constant temperature and in normal position free from other objects.

In case the motors are stored for more than two years, the bearings must be changed or the lubrication grease must be totally replaced after cleaning.

Single phase motors when kept in stock for 2 years or more must have their capacitors replaced (if any).

We recommend to turn the shaft (by hands) at least once a month, and to measure the insulation resistance before installing it, in cases of motors stored for more than 6 months or when subject to high humidity areas.

If motor is fitted with space heaters, these should be switched on.

Insulation Resistance Check

Measure the insulation resistance before operating the motor and/or when there is any sign of humidity in the winding.

The resistance measured at 25°C (77°F) must be:

Ri > (20 x U) / (1000 + 2P) [Mohm] (measured with a MEGGER at 500 V d.c.); where U = voltage (V); P = power (kW).

If the insulation resistance is less than 2 megaohms, the winding must be dried according to the following:
✓ Warm it up inside an oven at a minimum temperature of 80°C (176°F) increasing 5°C (41°F) every hour until 105°C (221°F), remaining under this temperature for at least one hour. Check if the stator insulation resistance remains constant within the accepted values. If not, stator must be reimpregnated.

INSTALLATION

1 - Safety

All personnel involved with electrical installations, either handling, lifting, operation or maintenance must be well informed and up-to-dated concerning the safety standard and principles that govern the work and carefully follow them.

We strongly recommend that these jobs are carried out by qualified personnel.



MAKE SURE THAT THE ELECTRIC MOTORS ARE SWITCHED OFF BEFORE STARTING ANY MAINTENANCE SERVICE.

Motors must be protected against accidental starts.

When performing any maintenance service, disconnect the motor from the power supply. Make sure all accessories have been switched off and disconnected.

Do not change the regulation of the protecting devices to avoid damaging.



LEAD CONNECTION IN SULATION INSIDE THE TERMINAL BOX MUST BE DONE WITH AN INSULATING MATERIAL COMPATIBLE WITH MOTOR THERMAL CLASS WHICH IS SHOWN ON THE MOTOR NAMEPLATE.

2 - Operating Conditions

Electric motors, in general, are designed for operation at an altitude of 1000m above sea level for an ambient temperature between 25°C (77°F) and 40°C (104°F). Any variation is stated on the nameplate.



COMPARE THE CURRENT, VOLTAGE, FREQUENCY, SPEED, OUTPUT AND OTHER VALUES DEMANDED BY THE APPLICATION WITH THE DATA GIVEN ON THE NAMEPLATE.

Motors supplied for hazardous locations must be installed in areas that comply with that specified on the motor nameplate.



KEEP AIR INLET AND OUTLET FREE AND CLEAN. THE AIR BLOWN OUT BY THE MOTOR SHALL NOT ENTER AGAIN. THE DISTANCE BETWEEN THE AIR INLET AND THE WALL MUST BE AROUND ¼ OF THE INLET OPENING DIAMETER.

3 - Foundation

Motors provided with feet must be installed on though foundations to avoid excessive vibrations.

The purchaser is fully responsible for the foundation.

Metal parts must be painted to avoid corrosion.

The foundation must be uniform and sufficiently tough to support any short circuit strengths. It must be designed in such a way to stop any vibration originated from resonance.

4 - Drain Holes

Make sure the drains are placed in the lower part of the motor when the mounting configuration differs from that specified on the motor purchase order.

5 - Balancing

WEG MOTORS ARE DYNAMICALLY BALANCED, WITH HALF KEY AT NO LOAD AND UNCOUPLED.

Transmission elements such as pulleys, couplings, etc must be dynamically balanced with half key before installation. Use always appropriate tools for installation and removal.

6 - Alignment

ALIGN THE SHAFT ENDS AND USE FLEXIBLE COUPLING, WHENEVER POSSIBLE.

Ensure that the motor mounting devices do not allow modifications on the alignment and further damages to the bearings.

When assembling a half-coupling, be sure to use suitable equipment and tools to protect the bearings.

Suitable assembly of half-coupling: check that clearance Y is less than 0.05mm and that the difference X1 to X2 is less than 0.05m as well.

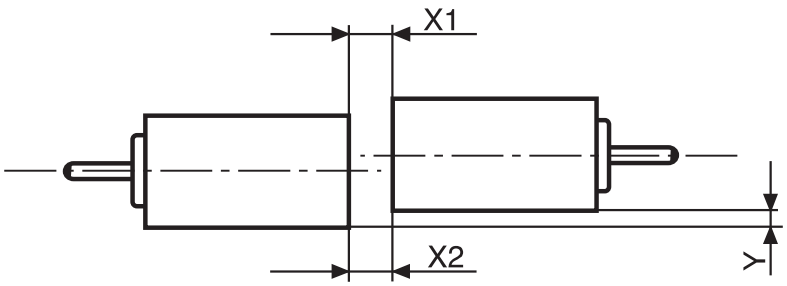

Note: The "X" dimension must be at least 3mm.

7 - Belt Drive

When using pulley or belt coupling the following must be observed:
✓ Belts must be tighten just enough to avoid slippage when running, according to the specifications stated on the belt supplier recommendation.

WARNING:
Excessive tension on the pulleys will damage the bearings and lead to a probable shaft rupture.

8 - Connection

WARNING: Voltage may be connected at standstill inside the terminal box for heating elements or direct winding heating.

WARNING: The capacitor on single-phase motors can retain a charge which appears across the motor terminals, even when the motor has reached standstill.



A WRONG CONNECTION CAN BURN THE MOTOR.

Voltage and connection are indicated on the nameplate. The acceptable voltage variation is ± 10%, the acceptable frequency variation is ± 5% and the total acceptable variation is ± 10%.

9 - Starting Methods

The motor is rather started through direct starting. All Weg motors must be connected as shown on the motor nameplate, failure to follow the motor nameplate could lead to motor failure.

In case this is not possible, use compatible methods to the motor load and voltage.

✓ 3 lead single voltage and 9 lead dual voltage motors can be started as follows:
Full Voltage Direct On Line.
Auto-Transformer Starting.
Electronic Soft-Starting.
VFD Starting - subject to verification and application analysis.

✓ 6 lead single voltage motors and 12 lead dual voltage motors can be connected as follows:
Full Voltage Direct On Line.
WYE/DELTA Starting.
Auto-Transformer Starting.
Electronic Soft-Starting.
VFD Starting - subject to verification and application analysis.

The rotation direction is clockwise if the motor is viewed from DE side and if the phases are connected according to the sequence L1, L2, L3.

To change the rotation direction, interchange two of the connecting leads.



THE CONNECTION TO THE POWER SUPPLY MUST BE DONE BY QUALIFIED PERSONNEL AND WITH FULL ATTENTION TO ASSURE A SAFE AND PERMANENT CONNECTION. AFTER CONNECTING THE MOTOR, CHECK FOR ANY STRANGE BODY INSIDE THE TERMINAL BOX. THE CABLE INLETS NOT IN USE MUST BE CLOSED.

Make sure to use the correct cable dimension, based on the rated current stamped on the motor nameplate.



BEFORE ENERGIZING THE TERMINALS, CHECK IF THE EARTHING IS MADE ACCORDING TO THE ACTUAL STANDARDS. THIS IS ESSENTIAL AGAINST ACCIDENT RISKS.

When the motor is supplied with protective or monitor temperature device such as thermostats, thermistors, thermal protector, etc, connect their terminals to the corresponding devices on the control panel.

10- Start-Up



THE KEY MUST BE FASTENED OR REMOVED BEFORE STARTING THE MOTOR.

a) The motor must start and operate smoothly. In case this does not occur, turn it off and check the connections and the mounting before starting it again.

b) If there is excessive vibration, check if the fastening screws are correctly fastened. Check also if the vibration comes from a neighbour machine. Periodical vibration checks must be done.

c) Run the motor under rated load for a short period of time and compare if the running current is equal to that stamped on the nameplate.

MAINTENANCE



WARNING:
SAFETY CHECK LIST.

1 - General Inspection

- ✓ Check the motor periodically.
- ✓ Keep the motor clean and assure free air flow.
- ✓ Check the seals or V Ring and replace them, if required.
- ✓ Check the connections as well as supporting screws.
- ✓ Check the bearings and observe:
  Any excessive noise, bearing temperature and grease condition.
- ✓ When a changing, under normal conditions, is detected, check the motor and replace the required parts.
  The frequency of the inspections depends on the motor type and on the application conditions.

LUBRICATION



FOLLOW THE REGREASING INTERVALS. THIS IS FUNDAMENTAL FOR PROPER MOTOR OPERATION.

1 - Machines without Grease Nipples

In these cases the regreasing shall be done at the preventive maintenance job observing the following aspects:

✓ Disassemble carefully the motors.
✓ Take all the grease out.
✓ Wash the bearing with querosene or diesel.
✓ Regrease the bearing immediately.

2 - Machines Fitted with Grease Nipples

It is strongly recommended to grease the machine while running. This allows the grease renewal in the bearing housing. When this is not possible due to turning parts by the grease device (pulleys, bushing, etc) that offer some risk to the physical integrity of the operator, proceed as follows:

✓ Clean the area near to the grease nipple.
✓ Put approximately half of the total grease and run the motor for 1 minute at full speed. Then turn off the motor and pump the rest of the grease.
✓ The injection of all the grease with the motor in standstill can make the grease penetrate into the motor, through the inner seal of the bearing housing.

When regreasing, use only special bearing grease with the following properties:

RELUBRICATION INTERVALS RECOMMENDED - POLYREX® EM GREASE (ESSO/EXXON)

Frame	Amount of grease (g)	3600 rpm	3000 rpm	1800 rpm	1500 rpm	1200 rpm	1000 rpm	900 rpm	750 rpm	720 rpm	600 rpm	500 rpm
Relubrication intervals in hours - ball bearings												
254/6T	*13*	*15700*	*18100*	*20000*	*20000*	*20000*	*20000*	*20000*	*20000*	*20000*	*20000*	*20000*
284/6T	*18*	*11500*	*13700*	*20000*	*20000*	*20000*	*20000*	*20000*	*20000*	*20000*	*20000*	*20000*
324/6T	*21*	*9800*	*11900*	*20000*	*20000*	*20000*	*20000*	*20000*	*20000*	*20000*	*20000*	*20000*
364/5T	*27*	*3600*	*4500*	*9700*	*11600*	*14200*	*16400*	*17300*	*19700*	*20000*	*20000*	*20000*
404/5TS	*27*	*3600*	*4500*	*9700*	*11600*	*14200*	*16400*	*17300*	*19700*	*20000*	*20000*	*20000*
444/5TS	*27*	*3600*	*4500*	*9700*	*11600*	*14200*	*16400*	*17300*	*19700*	*20000*	*20000*	*20000*
504/5TS	*27*	*3600*	*4500*	*9700*	*11600*	*14200*	*16400*	*17300*	*19700*	*20000*	*20000*	*20000*
586/7TS	*27*	*3600*	*4500*	*9700*	*11600*	*14200*	*16400*	*17300*	*19700*	*20000*	*20000*	*20000*
Relubrication intervals in hours - cylindrical roller bearings												
324/5T	*21*	*9800*	*11900*	*20000*	*20000*	*20000*	*20000*	*20000*	*20000*	*20000*	*20000*	*20000*
364/5T	*27*			*9700*	*11600*	*14200*	*16400*	*17300*	*19700*	*20000*	*20000*	*20000*
404/5T	*34*			*6000*	*7600*	*9500*	*11600*	*13800*	*15500*	*15500*	*17800*	*20000*
444/5T	*45*			*4700*	*6000*	*7600*	*9800*	*12200*	*13700*	*13700*	*15700*	*20000*
447/5T	*45*			*4700*	*6000*	*7600*	*9800*	*12200*	*13700*	*13700*	*15700*	*20000*
504/5T	*45*			*4700*	*6000*	*7600*	*9800*	*12200*	*13700*	*13700*	*15700*	*20000*
586/7T	*60*			*3300*	*4400*	*5900*	*7800*	*10700*	*11500*	*11500*	*13400*	*17300*

WARNING:

The table above is specifically intended for relubrication with Polyrex® EM grease and bearing absolute operating temperature of:

✓ 70°C (158°F) for 254/6T to 324/6T frame motors;
✓ 85°C (185°F) for 364/5T to 586/7T frame motors.

For every 15°C (59°F) above these limits, relubrication interval must be reduced by half.

Shielded bearing (ZZ) are lubricated for bering's life as long as they operate under normal ambient conditions and temperature of 70°C(158°F).



WE RECOMMEND TO USE BALL BEARINGS FOR MOTORS DIRECTLY COUPLED TO THE LOAD.



WARNING:
EXCESS OF GREASE CAN CAUSE BEARING OVERHEATING RESULTING IN COMPLETE DAMAGE.

Compatibility of Polyrex® EM grease with other types of grease:

Containing polyurea thickener and mineral oil, the Polyrex® EM grease is compatible with other types of grease that contain:

- ✓ Lithium base or complex of lithium or polyurea and highly refined mineral oil;
- ✓ Inhibitor additive against corrosion, rust and anti-oxidant additive.

Notes:

- ✓ Although Polyrex® EM is compatible with the types of grease given above, we do no recommend to mix it with any other greases.
- ✓ If you intend to use a type of grease different than those recommended above, first contact WEG.
- ✓ On applications (with high or low temperatures, speed variation, etc), the type of grease and relubrication interval are given on an additicional nameplate attached to the motor.
- ✓ Vertical mounted motors must have the relubrication intervals reduced by half.



THE USE OF STANDARD MOTORS IN SPECIFIC AREAS OR SPECIAL APPLICATIONS MUST BE DONE BY CONSULT TO THE GREASE MANUFACTURER OR WEG.

ASSEMBLY AND DISASSEMBLY

Disassembly and assembly must be done by qualified personnel using only suitable tools and appropriated methods. The stator grips must be applied over the side face of the inner ring to be disassembled or over and adjacent part.

It is essential that the bearings disassembly and assembly be done under cleanning conditions to ensure good operation

and to avoid damages. New bearings shall only be taken out from their cases when assembling them.

Before installing a new bearing it is required to check the shaft fitting for any sharp edge or strike signals.

For bearing assembly, warm their inner parts with suitable equipment - inductive process - or use suitable tools.

SPARE PARTS

When ordering spare parts, please specify the full type designation and product code as stated on the motor nameplate.

Please also inform the motor serial number stated on the nameplate.

MOTORS FOR HAZARDOUS LOCATIONS

Besides the recommendations given previously, these ones must be also followed:



THE SPECIFICATION OF THE MOTOR INSTALLATION PLACE IS FOR CUSTOMER'S RESPONSIBILITY, WHO WILL ALSO DETERMINE THE ENVIRONMENT CHARACTERISTICS.

Motors for hazardous locations are manufactured according to specific standards for such environments and they are certified by worldwide certifying entities.

1 - Installation

The complete installation must follow procedures given by the local legislation in effect.



THE INSTALLATION OF HAZARDOUS LOCATION MOTORS MUST BE CARRIED OUT BY SKILLED PEOPLE, AND THE THERMAL PROTECTION MUST BE ALWAYS INSTALLED, EITHER INSIDE OR OUTSIDE THE MOTOR, OPERATING AT THE RATED CURRENT.

2 - Maintenance

Maintenance must be carried out by repair shops authorized by WEG.

Repair shops and people without WEG's authorization who will perform any service or hazardous location motors will be fully responsible for such service as well as for any consequential damage.



ANY ELECTRICAL OR MECHANICAL MODIFICATION MADE ON HAZARDOUS LOCATION MOTORS WILL VOID THE CERTIFICATION.

When performing maintenance, installation or relubrication, follow these instructions:

- ✓ Check if all components are free of edges, knocks or dirt.
- ✓ Make sure all parts are in perfect conditions.
- ✓ Lubricate the surfaces of the endshield fittings with protective oil to make the assembly easier.
- ✓ Use only rubber hammer to fit the parts.
- ✓ Check for correct bolts tightening.
- ✓ Use clearance calibrator for correct T-box fitting (smaller than 0.05mm).



DO NOT REUSE DAMAGED OR WORN PARTS. REPLACE THEM BY NEW ONES SUPPLIED BY THE FACTORY.

MOTORS DRIVEN BY VFD

Applications using VFD´s without filter can affect motor performance as follows:

- ✓ Lower efficiency.
- ✓ Higher vibration.
- ✓ Higher noise level.
- ✓ Higher rated current.
- ✓ Higher temperature rise.
- ✓ Reduced motor insulation.
- ✓ Reduced bearing life.

1 - Standard Motors

- ✓ Voltages lower than 440V do not require filter.
- ✓ Voltages equal or higher than 440V or lower than 575V require filter for motor power supply cables longer than 20 meters.
- ✓ Voltages equal or higher than 575V require filter for any size of power supply cables.



IF SUCH RECOMMENDATIONS ARE NOT FOLLOWED ACCORDINGLY, MOTOR WARRANTY WILL BE VOID.

2 - Inverter Duty Motors

- ✓ Check power supply voltage of the forced cooling set.
- ✓ Filters are not required.

WARRANTY TERMS
SERIES AND ENGINEERING PRODUCTS

WEG warrants its products against defects in workmanship and materials for 18 months from the invoice date issued by the factory, authorized distributor or agent limited to 24 months from manufacturing date independent of installation date as long as the following items are fulfilled accordingly:
- Proper transportation, handling and storage;
- Correct installation based on the specified ambient conditions and free of corrosive gases;
- Operation under motor capacity limits;
- Observation of the periodical maintenance services;
- Repair and/or replacement effected only by personnel duly authorized in writing by WEG;
- The failed product be available to the supplier and/or repair shop for a required period to detect the cause of the failure and corresponding repair;
- Immediate notice by the purchaser about failures occured and that these are accepted by WEG as manufacturing defects.

This warranty does not include disassembly services at the urchaser facilities, transportation costs with product, tickets, accomodation and meals for technical personnel when requested by the customer. The warranty service will be only carried out at WEG Authorized Repair Shops or at WEG´s facilities.

Components whose useful life, under normal use, is shorter than the warranty period are not covered by these warranty terms.

The repair and/or replacement of parts or components, when effected by WEG and/or any WEG Authorized Repair Shop, will not give warranty extension.

This constitutes WEG´s only warranty in connection with this sale and the company will have no obligation or liability whatsoever to people, third parties, other equipment or installations, including without limitation, any claims for consequential damages or labor costs.

Section 3.5.2

UV Inlet Flowmeter

SM6601

Magnetic-inductive flow meter

SMN12GGXFRKG/US-100

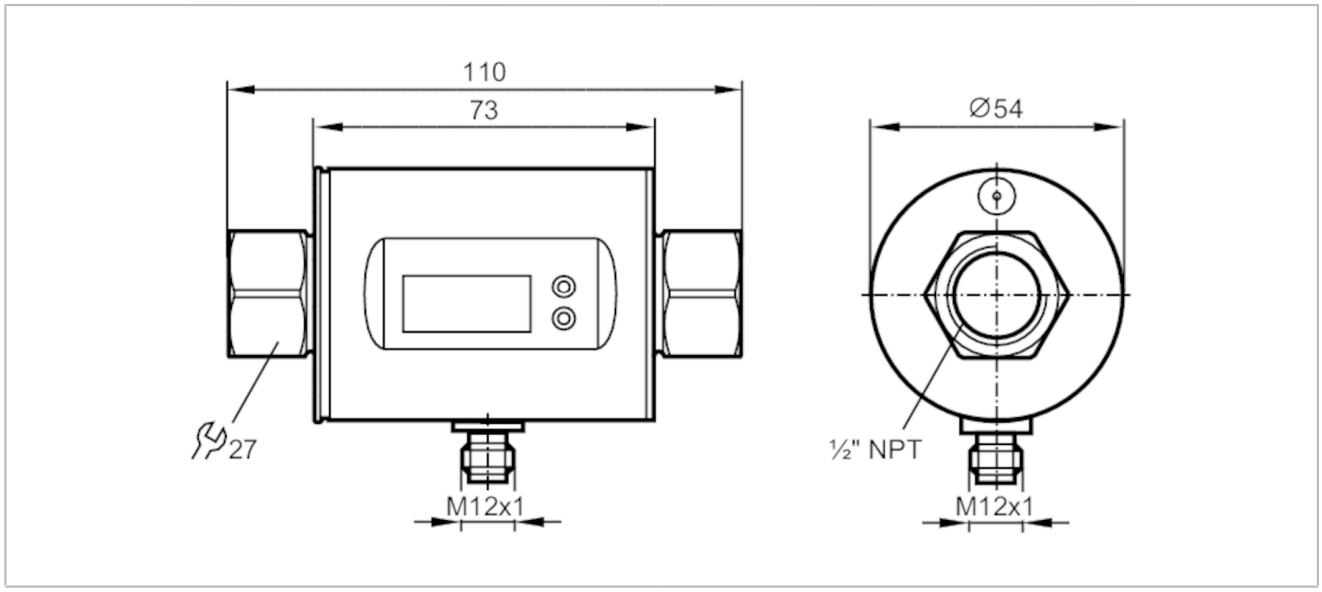

CE CRN cULus LISTED EAC EC 1935/2004 IO-Link UKCA

Product characteristics			
Number of inputs and outputs		Number of digital outputs: 2; Number of analog outputs: 1	
Measuring range		1.5...396 gph	0.03...6.6 gpm
Process connection		threaded connection 1/2" NPT DN15	
Application			
System		gold-plated contacts	
Application		Totalizer function; for industrial applications	
Media		Conductive liquids; water; water-based media	
Note on media		conductivity: ≥ 20 µS/cm	
		viscosity: < 70 mm²/s (40 °C)	
Medium temperature	[°F]	14...158	
Pressure rating	[bar]	16	
Pressure rating	[psi]	232	
MAWP (for applications according to CRN)	[bar]	17.7	
Electrical data			
Operating voltage	[V]	18...30 DC; (according to EN 50178 SELV/PELV)	
Current consumption	[mA]	95; (24 V)	
Min. insulation resistance	[MΩ]	100; (500 V DC)	
Protection class		III	
Reverse polarity protection		yes	
Power-on delay time	[s]	5	
Inputs / outputs			
Number of inputs and outputs		Number of digital outputs: 2; Number of analog outputs: 1	
Inputs			
Inputs		counter reset	

SM6601

Magnetic-inductive flow meter

SMN12GGXFRKG/US-100

Outputs			
Total number of outputs		2	
Output signal		switching signal; analog signal; pulse signal; IO-Link; (configurable)	
Electrical design		PNP/NPN	
Number of digital outputs		2	
Output function		normally open / closed; (configurable)	
Max. voltage drop switching output DC	[V]	2	
Permanent current rating of switching output DC	[mA]	200	
Number of analog outputs		1	
Analog current output	[mA]	4...20; (scalable)	
Max. load	[Ω]	500	
Analog voltage output	[V]	0...10; (scalable)	
Min. load resistance	[Ω]	2000	
Pulse output		flow rate meter	
Short-circuit protection		yes	
Type of short-circuit protection		yes (non-latching)	
Overload protection		yes	
Measuring/setting range			
Measuring range		1.5...396 gph	0.03...6.6 gpm
Display range		-475.5...475.5 gph	-7.925...7.925 gpm
Resolution		0.5 gph	0.01 gpm
Set point SP		3.5...396.5 gph	0.06...6.6 gpm
Reset point rP		1.5...394 gph	0.03...6.57 gpm
Analog start point ASP		0...318 gph	0...5.3 gpm
Analog end point AEP		78...396 gph	1.3...6.6 gpm
In steps of		0.5 gph	0.01 gpm
Volumetric flow quantity monitoring			
Pulse value		0.01...30 000 000 gal	
Pulse length	[s]	0,01...2	
Temperature monitoring			
Measuring range	[°F]	-4...176	
Resolution	[°F]	0.1	
Set point SP	[°F]	-2.5...176	
Reset point rP	[°F]	-3.5...175	
Analog start point	[°F]	-4...140.5	
Analog end point	[°F]	31.5...176	
In steps of	[°F]	0.5	
Accuracy / deviations			
Flow monitoring			
Accuracy (in the measuring range)		± (0,8 % MW + 0,5 % MEW)	
Repeatability		± 0,2% MEW	

SM6601

Magnetic-inductive flow meter

SMN12GGXFRKG/US-100

Temperature monitoring			
Accuracy	[K]	± 2,5 (Q > 0,26 gpm)	
Reaction times			
Flow monitoring			
Response time	[s]	0.15; (dAP = 0, T19)	
Delay time programmable dS, dr	[s]	0...50	
Damping for the switching output dAP	[s]	0...5	
Temperature monitoring			
Dynamic response T05 / T09	[s]	T09 = 20 (Q > 0,26 gpm)	
Software / programming			
Parameter setting options		Flow monitoring; quantity meter; Preset counter; Temperature monitoring; hysteresis / window; normally open / closed; switching logic; current/ voltage/pulse output; Start-up delay; display can be deactivated; Display unit	
Interfaces			
Communication interface		IO-Link	
Transmission type		COM2 (38,4 kBaud)	
IO-Link revision		1.1	
SDCI standard		IEC 61131-9	
Profiles		Smart Sensor: Process Data Variable; Device Identification, Device Diagnosis	
SIO mode		yes	
Required master port class		A	
Process data analog		3	
Process data binary		2	
Min. process cycle time	[ms]	5	
Supported DeviceIDs		Type of operation	DeviceID
		default	570
Operating conditions			
Ambient temperature	[°F]	14...140	
Storage temperature	[°F]	-13...176	
Protection		IP 67	
Tests / approvals			
EMC		DIN EN 60947-5-9	
Shock resistance		DIN EN 68000-2-27	20 g (11 ms)
Vibration resistance		DIN EN 60068-2-6	5 g (10...2000 Hz)
MTTF	[years]	145	
Pressure equipment directive		sound engineering practice; can be used for group 2 fluids; group 1 fluids on request	
Mechanical data			
Weight	[g]	593.5	
Material		stainless steel (1.4404 / 316L); PBT-GF20; PC; FKM; TPE	
Materials (wetted parts)		stainless steel (1.4404 / 316L); PEEK; FKM	
Process connection		threaded connection 1/2" NPT DN15	

SM6601

Magnetic-inductive flow meter

SMN12GGXFRKG/US-100

Displays / operating elements

Display	Display unit	6 x LED, green (gpm, gph, gal, °F, 10^3, 1000 x 10^3)
	Switching status	2 x LED, yellow
	Measured values	alphanumeric display, 4-digit
	Programming	alphanumeric display, 4-digit

Remarks

Remarks	MW = Measured value
	MEW = Final value of the measuring range
Pack quantity	1 pcs.

Electrical connection

Connector: 1 x M12; Contacts: gold-plated



SM6601

Magnetic-inductive flow meter

SMN12GGXFRKG/US-100

Connection

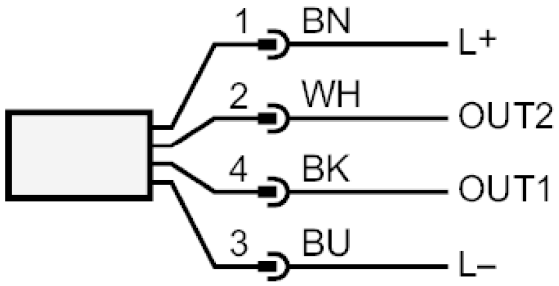

	Colors to DIN EN 60947-5-2
OUT1:	Switching output Volumetric flow quantity monitoring
	Pulse output quantity meter
	signal output Preset counter
	IO-Link
OUT2:	Switching output Volumetric flow quantity monitoring
	Switching output Temperature monitoring
	analog output Volumetric flow quantity monitoring
	analog output Temperature monitoring
	Input counter reset
	Core colors :
BK =	black
BN =	brown
BU =	blue
WH =	white

SM6601

Magnetic-inductive flow meter

SMN12GGXFRKG/US-100

Diagrams and graphs

Pressure loss

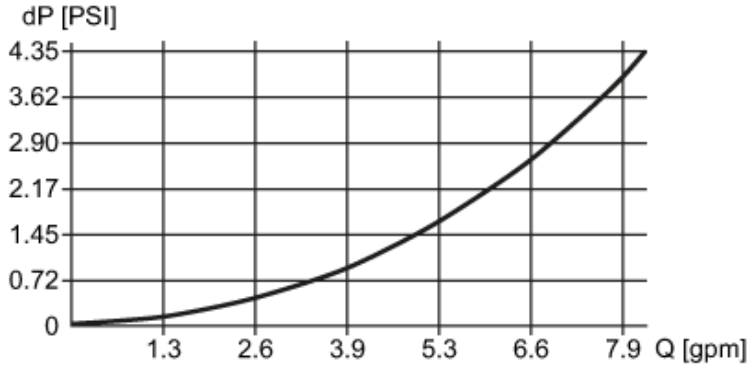

dP Pressure loss

Q volumetric flow quantity

345 Carlingview Drive
Toronto, Ontario
CANADA M9W 6N9
Tel.: 416.734.3300
Fax.: 416.231.1626
Toll Free: 1.877.682.8772
www.tssa.org

April 18, 2018

KARL KLINGER
IFM EFECTOR INC
1100 ATWATER DR
MALVERN PA 19355
US

Service Request Type: BPV-Fitting Registration
Service Request No.: 2079952
Your Reference No.:
Registered to: IFM PROVER GMBH

Dear KARL KLINGER,

Technical Standards and Safety Authority (TSSA) is pleased to inform you that your submission has been reviewed and registered as follows:

CRN No.: 0F20267.5

Main Design No.: SCOPE OF REGISTRATION - IFM SENSORS
Expiry Date: 18-Apr-2028

Please be advised that a valid quality control system must be maintained for the fitting registration to remain valid until the expiry date.

The stamped copy of the approved registration and the invoice are mailed separately. Should you have any questions or require further assistance, please contact a Customer Service Advisor at 1.877.682.TSSA (8772) or e-mail customerservices@tssa.org. We will be happy to assist you. When contacting TSSA regarding this file, please refer to the Service Request number provided above

Yours truly,

Liliana Constantinescu
Tel. : 416-734-3425

NOTE: You cannot save the DATA you entered on this form, you must print a copy and FAX it or MAIL it!

Technical Standards and Safety Authority
345 Carlingview Drive
Toronto, Ontario M9W 6N9
www.tssa.org

Show facsimile of manufacturer's logo or trademark, as it will appear on the fitting, in the space below

STATUTORY DECLARATION
Registration of Fittings

I, Karl Klinger, Director of Marketing
(Name and Position, e.g. President, Plant Manager, Chief Engineer)

of ifm efector, inc.
(Name of Manufacturer)

Located at 1100 Atwater Drive, Malvern, PA 19355 610-524-2000 610-524-2800
(Plant Address) *(Telephone No.)* *(Fax No.)*

☐ do solemnly declare that the fittings listed hereunder, which are subject to the ***Technical Standards and Safety Act***, Boilers and Pressure Vessels Regulation, comply with all of the requirements of

(Title of recognized North American Standard)

which specifies the dimensions, materials of construction, pressure/temperature ratings, identification marking the fittings and service;

☑ or are not covered by the provisions of a recognized North American standard and are therefore manufactured to comply with ASME B31.3 2012 ED. as supported by the attached data which identifies the dimensions, material of construction, pressure/temperature ratings and the basis for such ratings, the marking of the fitting for identification and service.

I further declare that the manufacture of these fittings is controlled by a quality system meeting the requirements of ISO 9001:2008 which has been verified by the following authority, DQS GmbH.

The items covered by this declaration, for which I seek registration, are category F type fittings. In support of this application, the following information and/or test data are attached as follows:

Test reports and drawings for sensor families LM (level), PG, PI & PM (pressure) and SA, SB, SI, SM & SV (flow)
(drawings, calculations, test reports, etc.)

Declared before me at 1100 Atwater Dr **in the** State **of** PA

the 4th **day of** May **AD 20** 17.

COMMONWEALTH OF PENNSYLVANIA
NOTARIAL SEAL
Maureen G. Marabella, Notary Public
West Whiteland Twp., Chester County
My Commission Expires July 27, 2018
MEMBER, PENNSYLVANIA ASSOCIATION OF NOTARIES

Commissioner for Oaths:

Maureen Marabella
(Printed name)

Maureen G Marabella
(Signature)

K. Klinger
(Signature of Declarer)

FOR OFFICE USE ONLY

To the best of my knowledge and belief, the application meets the requirements of the ***Technical Standards and Safety Act***, Boilers and Pressure Vessels Regulation, and CSA Standard B51 and is accepted for registration in Category F.

CRN: OF 20267.5

Registered by:

Dated: April 18, 2018

NOTE: This registration expires on: April 18, 2028

Technical Standards and Safety Authority — Boilers and Pressure Vessels Safety Program
REGISTERED
C.R.N.: OF 20267.5
Signed:
Date: April 18, 2018

**Information provided in this application is releasable under the Freedom of Information and Privacy Protection Act and may be disclosed upon request.*

PV 09553 (04/17)

See attached stamped Scope of registration

IFM Flow Sensors - CRN Scope of Registration

Design Code: ASME B31.3 2014 Edition
Design Pressure and Temperature: See Chart Below
Hydrotest Pressure: See Chart Below
Corrosion Allowance: None
Impact Testing: Exempt per paragraph 323.2.2
Radiography: None

Nearest equivalent ASME or ASTM material specification:		
1.4404	ASTM A276 Type 316L	UNS S31603
1.4404	ASTM A312 Type TP316L	UNS S31603

Cat. No.	Description	Pressure / bar				Temp. Range	1: Process Connection						2: gasket					3: Tube					4: Sensor tip				
		Tested Bursting Pressure B	Factor of safety	Rated MAWP	MAWP in Data Sheet		Dimension	Material Number	Material Name	ref. to Standard	Art. No.	Refer to Assembly Drawing	Material Number	Material Name	ref. to Standard	Art. No.	Refer to Assembly Drawing	Material Number	Material Name	ref. to Standard	Art. No.	Refer to Assembly Drawing	Material Number	Material Name	ref. to Standard	Art. No.	Refer to Assembly Drawing
SA2000	tested sensor				85	-20...90 °C -4...194 °F	G1/2"	1.4404	X2CrNiMo17-12-2	DIN EN 10088-3: 2014	80230120	11121114	FKM	na	na	700426	11121114	No tube					1.4404	X2CrNiMo17-12-2	DIN EN 10088-3: 2014	80235277	11121114
SA2004	ref to SA2000				85	-20...90 °C -4...194 °F	G1/2"	1.4404	X2CrNiMo17-12-2	DIN EN 10088-3: 2014	80230120	11121114	FKM	na	na	700426	11121114	No tube					1.4404	X2CrNiMo17-12-2	DIN EN 10088-3: 2014	80235277	11121114
SA6010	tested sensor				100	-20...90 °C -4...194 °F	1/2-14 NPT male	1.4404	X2CrNiMo17-12-2	DIN EN 10088-3: 2014	80230119	11136109	No gasket					No tube					1.4404	X2CrNiMo17-12-2	DIN EN 10088-3: 2014	80235277	11136109
SA6014	ref to SA6010				100	-20...90 °C -4...194 °F	1/2-14 NPT male	1.4404	X2CrNiMo17-12-2	DIN EN 10088-3: 2014	80230119	11136109	No gasket					No tube					1.4404	X2CrNiMo17-12-2	DIN EN 10088-3: 2014	80235277	11136109
SA4100	tested sensor				50	-20...100 °C -4...212 °F	Dia 8mm	1.4404	X2CrNiMo17-12-2	DIN EN 10088-3: 2014	80230118	11120039	No gasket					1.4404	X2CrNiMo17-12-2	DIN EN 10088-3: 2014	80221732	11120039	1.4404	X2CrNiMo17-12-2	DIN EN 10088-3: 2014	80235277	11120039
SA4104	ref to SA4100				50	-20...100 °C -4...212 °F	Dia 8mm	1.4404	X2CrNiMo17-12-2	DIN EN 10088-3: 2014	80230118	11120039	No gasket					1.4404	X2CrNiMo17-12-2	DIN EN 10088-3: 2014	80221732	11120039	1.4404	X2CrNiMo17-12-2	DIN EN 10088-3: 2014	80235277	11120039
SA4110	ref to SA4100				50	-20...100 °C -4...212 °F	Dia 8mm	1.4404	X2CrNiMo17-12-2	DIN EN 10088-3: 2014	80230118	11120039	No gasket					1.4404	X2CrNiMo17-12-2	DIN EN 10088-3: 2014	80221732	11120039	1.4404	X2CrNiMo17-12-2	DIN EN 10088-3: 2014	80235277	11120039
SA4300	ref to SA4100				50	-20...100 °C -4...212 °F	Dia 8mm	1.4404	X2CrNiMo17-12-2	DIN EN 10088-3: 2014	80230118	11120039	No gasket					1.4404	X2CrNiMo17-12-2	DIN EN 10088-3: 2014	80221238	11120039	1.4404	X2CrNiMo17-12-2	DIN EN 10088-3: 2014	80235277	11120039
SA4304	ref to SA4100				50	-20...100 °C -4...212 °F	Dia 8mm	1.4404	X2CrNiMo17-12-2	DIN EN 10088-3: 2014	80230118	11120039	No gasket					1.4404	X2CrNiMo17-12-2	DIN EN 10088-3: 2014	80221238	11120039	1.4404	X2CrNiMo17-12-2	DIN EN 10088-3: 2014	80235277	11120039
SA4310	ref to SA4100				50	-20...100 °C -4...212 °F	Dia 8mm	1.4404	X2CrNiMo17-12-2	DIN EN 10088-3: 2014	80230118	11120039	No gasket					1.4404	X2CrNiMo17-12-2	DIN EN 10088-3: 2014	80221238	11120039	1.4404	X2CrNiMo17-12-2	DIN EN 10088-3: 2014	80235277	11120039
SA5000	tested sensor				100	-20...90 °C -4...194 °F	Conic 24° / Dia: 9,8mm	1.4404	X2CrNiMo17-12-2	DIN EN 10088-3: 2014	80230117	11119714	FKM	na	na	580801	11119714	1.4404	X2CrNiMo17-12-2	DIN EN 10088-3: 2014	80011927	11119714	1.4404	X2CrNiMo17-12-2	DIN EN 10088-3: 2014	80235277	11119714
SA5004	ref to SA5000				100	-20...90 °C -4...194 °F	Conic 24° / Dia: 9,8mm	1.4404	X2CrNiMo17-12-2	DIN EN 10088-3: 2014	80230117	11119714	FKM	na	na	580801	11119714	1.4404	X2CrNiMo17-12-2	DIN EN 10088-3: 2014	80011927	11119714	1.4404	X2CrNiMo17-12-2	DIN EN 10088-3: 2014	80235277	11119714
SA5030	ref to SA5000				100	-20...90 °C -4...194 °F	Conic 24° / Dia: 9,8mm	1.4404	X2CrNiMo17-12-2	DIN EN 10088-3: 2014	80230117	11119714	FKM	na	na	580801	11119714	1.4404	X2CrNiMo17-12-2	DIN EN 10088-3: 2014	80011927	11119714	1.4404	X2CrNiMo17-12-2	DIN EN 10088-3: 2014	80235277	11119714

THIS IS PART OF
CRN 0F20267.5
Technical Standards & Safety Authority
Boilers & Pressure Vessels
Safety Program

IFM Level Sensors - CRN Scope of Registration

Design Code: ASME B31.3 2014 Edition
Design Pressure and Temperature: See Chart Below
Hydrotest Pressure: See Chart Below
Corrosion Allowance: None
Impact Testing: Exempt per paragraph 323.2.2
Radiography: None

Nearest equivalent ASME or ASTM material specification:		
1.4404	ASTM A276 Type 316L	UNS S31603
CW614N	ASTM B455	UNS C36500

Cat. No.	Description	Pressure / bar				Temp. Range	1: PCB				2: Process Connection					3: Potting Compound				4: Gasket				5: O-Ring				6: Filler				7: Electrode				7: Sensor Tip				Assembly Group / dimension Drawing
		Tested Bursting Pressure B	Factor of safety	Max. MAWP	MAWP in Data Sheet		Material No.	Material Name	ref. to Standard	Art. No.	Dimension	Material No.	Material Name	ref. to Standard	Art. No.	Material No.	Material Name	ref. to Standard	Art. No.	Material No.	Material Name	ref. to Standard	Art. No.	Material No.	Material Name	ref. to Standard	Art. No.	Material No.	Material Name	ref. to Standard	Art. No.	Material No.	Material Name	ref. to Standard	Art. No.	Material No.	Material Name	ref. to Standard	Art. No.	Drawing No.
LMC100	Level Sensor				40	-40 ... 100 °C -40 ... 212 °F	-	FR4	-	80261079	G 1/2	1.4404	XGCrNiMo17-12-2	DIN EN 10088	80254822	-	Epoxy Resin	-	5740203 / 703246	-	U-Ring NBR	-	80236281	-	FKM	-	80254403	-	PP GF30	-	80254166	CW614N	CuZn39Pb3	DIN EN 12164	80254946	-	PEEK	-	80236617	11120069
LMC110	Level Sensor				40	-40 ... 100 °C -40 ... 212 °F	-	FR4	-	80261079	G 1/2	1.4404	XGCrNiMo17-12-2	DIN EN 10088	80254822	-	Epoxy Resin	-	5740203 / 703246	-	U-Ring NBR	-	80236281	-	FKM	-	80254403	-	PP GF30	-	80254166	CW614N	CuZn39Pb3	DIN EN 12164	80254946	-	PEEK	-	80236617	11120069
LMC400	Level Sensor				40	-40 ... 100 °C -40 ... 212 °F	-	FR4	-	80261079	G 1/2	1.4404	XGCrNiMo17-12-2	DIN EN 10088	80254822	-	Epoxy Resin	-	5740203 / 703246	-	U-Ring NBR	-	80236281	-	FKM	-	80254403	-	PP GF30	-	80254166	CW614N	CuZn39Pb3	DIN EN 12164	80254946	-	PEEK	-	80236617	11120069
LMC410	Level Sensor				40	-40 ... 100 °C -40 ... 212 °F	-	FR4	-	80261079	G 1/2	1.4404	XGCrNiMo17-12-2	DIN EN 10088	80254822	-	Epoxy Resin	-	5740203 / 703246	-	U-Ring NBR	-	80236281	-	FKM	-	80254403	-	PP GF30	-	80254166	CW614N	CuZn39Pb3	DIN EN 12164	80254946	-	PEEK	-	80236617	11120069
LMC500	Level Sensor				40	-40 ... 100 °C -40 ... 212 °F	-	FR4	-	80261079	1/2 NPT	1.4404	XGCrNiMo17-12-2	DIN EN 10088	80254822	-	Epoxy Resin	-	5740203 / 703246	-	-	-	-	-	FKM	-	80254403	-	PP GF30	-	80254166	CW614N	CuZn39Pb3	DIN EN 12164	80254946	-	PEEK	-	80236617	11120069
LMC510	Level Sensor				40	-40 ... 100 °C -40 ... 212 °F	-	FR4	-	80261079	1/2 NPT	1.4404	XGCrNiMo17-12-2	DIN EN 10088	80254822	-	Epoxy Resin	-	5740203 / 703246	-	-	-	-	-	FKM	-	80254403	-	PP GF30	-	80254166	CW614N	CuZn39Pb3	DIN EN 12164	80254946	-	PEEK	-	80236617	11120069

THIS IS PART OF CRN OF20267.5
Technical Standards & Safety Authority
Boilers & Pressure Vessels
Safety Program

IFM Flow Sensors - CRN Scope of Registration

Design Code: ASME B31.3 2014 Edition
Design Pressure and Temperature: See Chart Below
Hydrotest Pressure: See Chart Below
Corrosion Allowance: None
Impact Testing: Exempt per paragraph 323.2.2
Radiography: None

Nearest equivalent ASME or ASTM material specification:		
1.4404	ASTM A276 Type 316L	UNS S31603
CW617N	ASTM B124	UNS C37700

Cat. No.	Description	Pressure Data				Temp. Range	1: Process Connection					2: Manifold					3: Plug						4: Connecting Piece				
		Tested Bursting Pressure B	Factor of safety	Max. MAWP	MAWP in Data Sheet		Dimension	Material Number	Material Name	ref. to Standard	Art. No.	Refer to Assembly Drawing	Material Number	Material Name	ref. to Standard	Art. No.	Refer to Assembly Drawing	Dimension	Material Number	Material Name	ref. to Standard	Art. No.	Refer to Assembly Drawing	Material Number	Material Name	ref. to Standard	Art. No.	Refer to Assembly Drawing
SIY202	Flow Sensor	[redacted]			40	-10...100 °C 14...212 °F	Rp 3/4	[redacted]					PPS GF40	[redacted]				G3/4	1.4404	X2CrNiMo17-12-2	DIN EN 10088-3	80225910	11128406	n/a	n/a	n/a	n/a	11128408
SIY203	Flow Sensor				40	-10...100 °C 14...212 °F	Rp 3/4						PPS GF40					G3/4	1.4404	X2CrNiMo17-12-2	DIN EN 10088-3	80225910	11128406	n/a	n/a	n/a	n/a	11128408
SIY234	Flow Sensor				40	-10...100 °C 14...212 °F	Rp 3/4						PPS GF40					G3/4	1.4404	X2CrNiMo17-12-2	DIN EN 10088-3	80225910	11128406	n/a	n/a	n/a	n/a	11128408
SIG232	Flow Sensor				40	-10...100 °C 14...212 °F	G 1/2						PPS GF40					G3/4	1.4404	X2CrNiMo17-12-2	DIN EN 10088-3	80225910	11128406	n/a	n/a	n/a	n/a	11128408
SIG233	Flow Sensor				40	-10...100 °C 14...212 °F	G 1/2						PPS GF40					G3/4	1.4404	X2CrNiMo17-12-2	DIN EN 10088-3	80225910	11128406	n/a	n/a	n/a	n/a	11128408
SIG234	Flow Sensor				40	-10...100 °C 14...212 °F	G 1/2						PPS GF40					G3/4	1.4404	X2CrNiMo17-12-2	DIN EN 10088-3	80225910	11128406	n/a	n/a	n/a	n/a	11128408
SIN232	Flow Sensor				40	-10...100 °C 14...212 °F	NPT 3/4						PPS GF40					G3/4	1.4404	X2CrNiMo17-12-2	DIN EN 10088-3	80225910	11128406	n/a	n/a	n/a	n/a	11128408
SIN233	Flow Sensor				40	-10...100 °C 14...212 °F	NPT 3/4						PPS GF40					G3/4	1.4404	X2CrNiMo17-12-2	DIN EN 10088-3	80225910	11128406	n/a	n/a	n/a	n/a	11128408
SIN234	Flow Sensor				40	-10...100 °C 14...212 °F	NPT 3/4						PPS GF40					G3/4	1.4404	X2CrNiMo17-12-2	DIN EN 10088-3	80225910	11128406	n/a	n/a	n/a	n/a	11128408
SIY246	Flow Sensor				25	-10...100 °C 14...212 °F	Rp 1						PPS GF40					G1	1.4404	X2CrNiMo17-12-2	DIN EN 10088-3	80225936	11128449	n/a	n/a	n/a	n/a	11128449
SIG246	Flow Sensor				25	-10...100 °C 14...212 °F	G 3/4						PPS GF40					G1	1.4404	X2CrNiMo17-12-2	DIN EN 10088-3	80225936	11128449	n/a	n/a	n/a	n/a	11128449
SIN248	Flow Sensor				25	-10...100 °C 14...212 °F	NPT 1						PPS GF40					G1	1.4404	X2CrNiMo17-12-2	DIN EN 10088-3	80225936	11128449	n/a	n/a	n/a	n/a	11128449
SIY257	Flow Sensor				25	-10...100 °C 14...212 °F	Rp 1 1/2						PPS GF40					G 1 1/2	1.4404	X2CrNiMo17-12-2	DIN EN 10088-3	80225937	11128449	1.4404	X2CrNiMo17-12-2	DIN EN 10088-3	80225939	11128449
SIG257	Flow Sensor				25	-10...100 °C 14...212 °F	G 1 1/2						PPS GF40					G 1 1/2	1.4404	X2CrNiMo17-12-2	DIN EN 10088-3	80225937	11128449	1.4404	X2CrNiMo17-12-2	DIN EN 10088-3	80225939	11128449
SIN257	Flow Sensor				25	-10...100 °C 14...212 °F	NPT 1 1/2						PPS GF40					G 1 1/2	1.4404	X2CrNiMo17-12-2	DIN EN 10088-3	80225937	11128449	1.4404	X2CrNiMo17-12-2	DIN EN 10088-3	80225939	11128449

THIS IS PART OF CRN OF20267.5
Provincial Boilers, Pressure Vessel & Fuel Safety Authority
Boilers & Pressure Vessels Safety Program

IFM Pressure Sensors - CRN Scope of Registration

Design Code: ASME B31.3 2014 Edition
Design Pressure and Temperature: See Chart Below
Hydrotest Pressure: See Chart Below
Corrosion Allowance: None
Impact Testing: Exempt per paragraph 323.2.2
Radiography: None

Nearest equivalent ASME or ASTM material specification:		
1.4435	ASTM A276 Type 316L	UNS S31603
CW614N	ASTM B455	UNS C38500

Cat. No.	Description	Pressure / bar				Temp. Range	1: Process Connection						2: Pressure Cell						3: Cell Fixing					4: Gasket Support					5: Gasket						Assembly Group / Dimension Drawing	Grouping Reason
		Tested Bursting Pressure	Factor of safety	Max. MAWP	NAWP in Data Sheet		Dimension	Material Number	Material Name	ref. to Standard	Art. No.	Refer to Assembly Drawing	Nominal Pressure	Material Number	Material Name	ref. to Standard	Art. No.	Refer to Assembly Drawing	Material Number	Material Name	ref. to Standard	Art. No.	Refer to Assembly Drawing	Material Number	Material Name	ref. to Standard	Art. No.	Refer to Assembly Drawing	Material Number	Material Name	ref. to Standard	Art. No.	Refer to Assembly Drawing	Drawing No.	Drawing No.
PG2734	Pressure Sensor	[redacted]			50	-25...150 °C -13...302 °F	G1 EXTERNAL ASEPTOFLEX VARIO	1.4435	X2CrNiMo18-14-3	DIN EN 10088-3	50015939	11128653	1000 kPa (10 bar)	AL2O3 99.9%	n/a	n/a	[illegible]	11128653	[redacted]										PTFE	n/a	n/a	[illegible]	11128653	11128653	11128653
PG2789	Pressure Sensor	[redacted]			4	-25...150 °C -13...302 °F	G1 EXTERNAL ASEPTOFLEX VARIO	1.4435	X2CrNiMo18-14-3	DIN EN 10088-3	80234172	11128662	0,1 bar	AL2O3 99.9%	n/a	n/a	[illegible]	11128662	[redacted]										PTFE	n/a	n/a	[illegible]	11128662	11128662	11128662
PG2793	Pressure Sensor	[redacted]			60	-25...150 °C -13...302 °F	G1 EXTERNAL ASEPTOFLEX VARIO	1.4435	X2CrNiMo18-14-3	DIN EN 10088-3	50015939	11128653	25 bar	AL2O3 99.9%	n/a	n/a	[illegible]	11128653	[redacted]										PTFE	n/a	n/a	[illegible]	11128653	11128653	11128653
PG2794	Pressure Sensor	[redacted]			50	-25...150 °C -13...302 °F	G1 EXTERNAL ASEPTOFLEX VARIO	1.4435	X2CrNiMo18-14-3	DIN EN 10088-3	50015939	11128653	10 bar	AL2O3 99.9%	n/a	n/a	[illegible]	11128653	[redacted]										PTFE	n/a	n/a	[illegible]	11128653	11128653	11128653
PG2795	Pressure Sensor	[redacted]			30	-25...150 °C -13...302 °F	G1 EXTERNAL ASEPTOFLEX VARIO	1.4435	X2CrNiMo18-14-3	DIN EN 10088-3	50015939	11128653	4 bar	AL2O3 99.9%	n/a	n/a	[illegible]	11128653	[redacted]										PTFE	n/a	n/a	[illegible]	11128653	11128653	11128653
PG2796	Pressure Sensor	[redacted]			20	-25...150 °C -13...302 °F	G1 EXTERNAL ASEPTOFLEX VARIO	1.4435	X2CrNiMo18-14-3	DIN EN 10088-3	50015939	11128653	2,5 bar	AL2O3 99.9%	n/a	n/a	[illegible]	11128653	[redacted]										PTFE	n/a	n/a	[illegible]	11128653	11128653	11128653
PG2797	Pressure Sensor	[redacted]			10	-25...150 °C -13...302 °F	G1 EXTERNAL ASEPTOFLEX VARIO	1.4435	X2CrNiMo18-14-3	DIN EN 10088-3	50015939	11128653	1 bar	AL2O3 99.9%	n/a	n/a	[illegible]	11128653	[redacted]										PTFE	n/a	n/a	[illegible]	11128653	11128653	11128653
PG2798	Pressure Sensor	[redacted]			10	-25...150 °C -13...302 °F	G1 EXTERNAL ASEPTOFLEX VARIO	1.4435	X2CrNiMo18-14-3	DIN EN 10088-3	80234172	11128662	0,25 bar	AL2O3 99.9%	n/a	n/a	[illegible]	11128662	[redacted]										PTFE	n/a	n/a	[illegible]	11128662	11128662	11128662
PG2799	Pressure Sensor	[redacted]			10	-25...150 °C -13...302 °F	G1 EXTERNAL ASEPTOFLEX VARIO	1.4435	X2CrNiMo18-14-3	DIN EN 10088-3	50015939	11128653	±1 bar	AL2O3 99.9%	n/a	n/a	[illegible]	11128653	[redacted]										PTFE	n/a	n/a	[illegible]	11128653	11128653	11128653
PG2889	Pressure Sensor	[redacted]			4	-25...150 °C -13...302 °F	G1 EXTERNAL SEALING CONE WITH UNION NUT	1.4435	X2CrNiMo18-14-3	DIN EN 10088-3	50019345	11130069	0,1 bar	AL2O3 99.9%	n/a	n/a	[illegible]	11130069	[redacted]										PTFE	n/a	n/a	[illegible]	11130069	11130069	11130069
PG2893	Pressure Sensor	[redacted]			60	-25...150 °C -13...302 °F	G1 EXTERNAL SEALING CONE WITH UNION NUT	1.4435	X2CrNiMo18-14-3	DIN EN 10088-3	50018943	11130072	25 bar	AL2O3 99.9%	n/a	n/a	[illegible]	11130072	[redacted]										PTFE	n/a	n/a	[illegible]	11130072	11130072	11130072
PG2894	Pressure Sensor	[redacted]			50	-25...150 °C -13...302 °F	G1 EXTERNAL SEALING CONE WITH UNION NUT	1.4435	X2CrNiMo18-14-3	DIN EN 10088-3	50018943	11130072	10 bar	AL2O3 99.9%	n/a	n/a	[illegible]	11130072	[redacted]										PTFE	n/a	n/a	[illegible]	11130072	11130072	11130072
PG2895	Pressure Sensor	[redacted]			30	-25...150 °C -13...302 °F	G1 EXTERNAL SEALING CONE WITH UNION NUT	1.4435	X2CrNiMo18-14-3	DIN EN 10088-3	50018943	11130072	4 bar	AL2O3 99.9%	n/a	n/a	[illegible]	11130072	[redacted]										PTFE	n/a	n/a	[illegible]	11130072	11130072	11130072
PG2896	Pressure Sensor	[redacted]			20	-25...150 °C -13...302 °F	G1 EXTERNAL SEALING CONE WITH UNION NUT	1.4435	X2CrNiMo18-14-3	DIN EN 10088-3	50018943	11130072	2,5 bar	AL2O3 99.9%	n/a	n/a	[illegible]	11130072	[redacted]										PTFE	n/a	n/a	[illegible]	11130072	11130072	11130072
PG2897	Pressure Sensor	[redacted]			10	-25...150 °C -13...302 °F	G1 EXTERNAL SEALING CONE WITH UNION NUT	1.4435	X2CrNiMo18-14-3	DIN EN 10088-3	50018943	11130072	1 bar	AL2O3 99.9%	n/a	n/a	[illegible]	11130072	[redacted]										PTFE	n/a	n/a	[illegible]	11130072	11130072	11130072
PG2898	Pressure Sensor	[redacted]			10	-25...150 °C -13...302 °F	G1 EXTERNAL SEALING CONE WITH UNION NUT	1.4435	X2CrNiMo18-14-3	DIN EN 10088-3	50019345	11130069	0,25 bar	AL2O3 99.9%	n/a	n/a	[illegible]	11130069	[redacted]										PTFE	n/a	n/a	[illegible]	11130069	11130069	11130069
PG2899	Pressure Sensor	[redacted]			10	-25...150 °C -13...302 °F	G1 EXTERNAL SEALING CONE WITH UNION NUT	1.4435	X2CrNiMo18-14-3	DIN EN 10088-3	50018943	11130072	±1 bar	AL2O3 99.9%	n/a	n/a	[illegible]	11130072	[redacted]										PTFE	n/a	n/a	[illegible]	11130072	11130072	11130072
PI2714	Pressure Sensor	[redacted]			60	-25...150 °C -13...302 °F	G1 EXTERNAL ASEPTOFLEX VARIO	1.4435	X2CrNiMo18-14-3	DIN EN 10088-3	80255321	11128653	16 bar	AL2O3 99.9%	n/a	n/a	[illegible]	11128653	[redacted]										PTFE	n/a	n/a	[illegible]	11128653	11128653	11128653
PI2715	Pressure Sensor	[redacted]			30	-25...150 °C -13...302 °F	G1 EXTERNAL ASEPTOFLEX VARIO	1.4435	X2CrNiMo18-14-3	DIN EN 10088-3	80255321	11128653	6 bar	AL2O3 99.9%	n/a	n/a	[illegible]	11128653	[redacted]										PTFE	n/a	n/a	[illegible]	11128653	11128653	11128653
PI2717	Pressure Sensor	[redacted]			15	-25...150 °C -13...302 °F	G1 EXTERNAL ASEPTOFLEX VARIO	1.4435	X2CrNiMo18-14-3	DIN EN 10088-3	80255321	11128653	1,6 bar	AL2O3 99.9%	n/a	n/a	[illegible]	11128653	[redacted]										PTFE	n/a	n/a	[illegible]	11128653	11128653	11128653
PI2789	Pressure Sensor	[redacted]			4	-25...150 °C -13...302 °F	G1 EXTERNAL ASEPTOFLEX VARIO	1.4435	X2CrNiMo18-14-3	DIN EN 10088-3	80237713	11128662	0,1 bar	AL2O3 99.9%	n/a	n/a	[illegible]	11128662	[redacted]										PTFE	n/a	n/a	[illegible]	11128662	11128662	11128662
PI2793	Pressure Sensor	[redacted]			60	-25...150 °C -13...302 °F	G1 EXTERNAL ASEPTOFLEX VARIO	1.4435	X2CrNiMo18-14-3	DIN EN 10088-3	50020668	11128653	25 bar	AL2O3 99.9%	n/a	n/a	[illegible]	11128653	[redacted]										PTFE	n/a	n/a	[illegible]	11128653	11128653	11128653
PI2794	Pressure Sensor	[redacted]			50	-25...150 °C -13...302 °F	G1 EXTERNAL ASEPTOFLEX VARIO	1.4435	X2CrNiMo18-14-3	DIN EN 10088-3	50020668	11128653	10 bar	AL2O3 99.9%	n/a	n/a	[illegible]	11128653	[redacted]										PTFE	n/a	n/a	[illegible]	11128653	11128653	11128653
PI2795	Pressure Sensor	[redacted]			30	-25...150 °C -13...302 °F	G1 EXTERNAL ASEPTOFLEX VARIO	1.4435	X2CrNiMo18-14-3	DIN EN 10088-3	50020668	11128653	4 bar	AL2O3 99.9%	n/a	n/a	[illegible]	11128653	[redacted]										PTFE	n/a	n/a	[illegible]	11128653	11128653	11128653
PI2796	Pressure Sensor	[redacted]			20	-25...150 °C -13...302 °F	G1 EXTERNAL ASEPTOFLEX VARIO	1.4435	X2CrNiMo18-14-3	DIN EN 10088-3	50020668	11128653	2,5 bar	AL2O3 99.9%	n/a	n/a	[illegible]	11128653	[redacted]										PTFE	n/a	n/a	[illegible]	11128653	11128653	11128653
PI2797	Pressure Sensor	[redacted]			10	-25...150 °C -13...302 °F	G1 EXTERNAL ASEPTOFLEX VARIO	1.4435	X2CrNiMo18-14-3	DIN EN 10088-3	50020668	11128653	1 bar	AL2O3 99.9%	n/a	n/a	[illegible]	11128653	[redacted]										PTFE	n/a	n/a	[illegible]	11128653	11128653	11128653
PI2798	Pressure Sensor	[redacted]			10	-25...150 °C -13...302 °F	G1 EXTERNAL ASEPTOFLEX VARIO	1.4435	X2CrNiMo18-14-3	DIN EN 10088-3	80237713	11128662	0,25 bar	AL2O3 99.9%	n/a	n/a	[illegible]	11128662	[redacted]										PTFE	n/a	n/a	[illegible]	11128662	11128662	11128662
PI2799	Pressure Sensor	[redacted]			10	-25...150 °C -13...302 °F	G1 EXTERNAL ASEPTOFLEX VARIO	1.4435	X2CrNiMo18-14-3	DIN EN 10088-3	50020668	11128653	±1 bar	AL2O3 99.9%	n/a	n/a	[illegible]	11128653	[redacted]										PTFE	n/a	n/a	[illegible]	11128653	11128653	11128653
PI2814	Pressure Sensor	[redacted]			50	-25...150 °C -13...302 °F	G1 EXTERNAL SEALING CONE WITH UNION NUT	1.4435	X2CrNiMo18-14-3	DIN EN 10088-3	80256382	11130072	16 bar	AL2O3 99.9%	n/a	n/a	[illegible]	11130072	[redacted]										PTFE	n/a	n/a	[illegible]	11130072	11130072	11130072
PI2816	Pressure Sensor	[redacted]			30	-25...150 °C -13...302 °F	G1 EXTERNAL SEALING CONE WITH UNION NUT	1.4435	X2CrNiMo18-14-3	DIN EN 10088-3	80256382	11130072	6 bar	AL2O3 99.9%	n/a	n/a	[illegible]	11130072	[redacted]										PTFE	n/a	n/a	[illegible]	11130072	11130072	11130072
PI2817	Pressure Sensor	[redacted]			15	-25...150 °C -13...302 °F	G1 EXTERNAL SEALING CONE WITH UNION NUT	1.4435	X2CrNiMo18-14-3	DIN EN 10088-3	80256382	11130072	1,6 bar	AL2O3 99.9%	n/a	n/a	[illegible]	11130072	[redacted]										PTFE	n/a	n/a	[illegible]	11130072	11130072	11130072
PI2889	Pressure Sensor	[redacted]			4	-25...150 °C -13...302 °F	G1 EXTERNAL SEALING CONE WITH UNION NUT	1.4435	X2CrNiMo18-14-3	DIN EN 10088-3	50019345	11130069	0,1 bar	AL2O3 99.9%	n/a	n/a	[illegible]	11130069	[redacted]										PTFE	n/a	n/a	[illegible]	11130069	11130069	11130069
PI2893	Pressure Sensor	[redacted]			60	-25...150 °C -13...302 °F	G1 EXTERNAL SEALING CONE WITH UNION NUT	1.4435	X2CrNiMo18-14-3	DIN EN 10088-3	50018943	11130072	25 bar	AL2O3 99.9%	n/a	n/a	[illegible]	11130072	[redacted]										PTFE	n/a	n/a	[illegible]	11130072	11130072	11130072
PI2894	Pressure Sensor	[redacted]			50	-25...150 °C -13...302 °F	G1 EXTERNAL SEALING CONE WITH UNION NUT	1.4435	X2CrNiMo18-14-3	DIN EN 10088-3	50018943	11130072	10 bar	AL2O3 99.9%	n/a	n/a	[illegible]	11130072	[redacted]										PTFE	n/a	n/a	[illegible]	11130072	11130072	11130072
PI2895	Pressure Sensor	[redacted]			30	-25...150 °C -13...302 °F	G1 EXTERNAL SEALING CONE WITH UNION NUT	1.4435	X2CrNiMo18-14-3	DIN EN 10088-3	50018943	11130072	4 bar	AL2O3 99.9%	n/a	n/a	[illegible]	11130072	[redacted]										PTFE	n/a	n/a	[illegible]	11130072	11130072	11130072
PI2896	Pressure Sensor	[redacted]			20	-25...150 °C -13...302 °F	G1 EXTERNAL SEALING CONE WITH UNION NUT	1.4435	X2CrNiMo18-14-3	DIN EN 10088-3	50018943	11130072	2,5 bar	AL2O3 99.9%	n/a	n/a	[illegible]	11130072	[redacted]										PTFE	n/a	n/a	[illegible]	11130072	11130072	11130072
PI2897	Pressure Sensor	[redacted]			10	-25...150 °C -13...302 °F	G1 EXTERNAL SEALING CONE WITH UNION NUT	1.4435	X2CrNiMo18-14-3	DIN EN 10088-3	50018943	11130072	1 bar	AL2O3 99.9%	n/a	n/a	[illegible]	11130072	[redacted]										PTFE	n/a	n/a	[illegible]	11130072	11130072	11130072
PI2898	Pressure Sensor	[redacted]			10	-25...150 °C -13...302 °F	G1 EXTERNAL SEALING CONE WITH UNION NUT	1.4435	X2CrNiMo18-14-3	DIN EN 10088-3	50019345	11130069	0,25 bar	AL2O3 99.9%	n/a	n/a	[illegible]	11130069	[redacted]										PTFE	n/a	n/a	[illegible]	11130069	11130069	11130069
PI2899	Pressure Sensor	[redacted]			10	-25...150 °C -13...302 °F	G1 EXTERNAL SEALING CONE WITH UNION NUT	1.4435	X2CrNiMo18-14-3	DIN EN 10088-3	50018943	11130072	±1 bar	AL2O3 99.9%	n/a	n/a	[illegible]	11130072	[redacted]										PTFE	n/a	n/a	[illegible]	11130072	11130072	11130072
PM1603	Pressure Sensor	[redacted]			45	-25...150 °C -13...302 °F	G1 EXTERNAL SEALING CONE	1.4435	X2CrNiMo18-14-3	DIN EN 10088-3	80255344	11128633	25 bar	AL2O3 99.9%	n/a	n/a	[illegible]	11128633	[redacted]										PTFE	n/a	n/a	[illegible]	11128633	11128633	11128633
PM1604	Pressure Sensor	[redacted]			30	-25...150 °C -13...302 °F	G1 EXTERNAL SEALING CONE	1.4435	X2CrNiMo18-14-3	DIN EN 10088-3	80255344	11128633	10 bar	AL2O3 99.9%	n/a	n/a	[illegible]	11128633	[redacted]										PTFE	n/a	n/a	[illegible]	11128633	11128633	11128633
PM1605	Pressure Sensor	[redacted]			20	-25...150 °C -13...302 °F	G1 EXTERNAL SEALING CONE	1.4435	X2CrNiMo18-14-3	DIN EN 10088-3	80255344	11128633	4 bar	AL2O3 99.9%	n/a	n/a	[illegible]	11128633	[redacted]										PTFE	n/a	n/a	[illegible]	11128633	11128633	11128633
PM1606	Pressure Sensor	[redacted]			20	-25...150 °C -13...302 °F	G1 EXTERNAL SEALING CONE	1.4435	X2CrNiMo18-14-3	DIN EN 10088-3	80255344	11128633	2,5 bar	AL2O3 99.9%	n/a	n/a	[illegible]	11128633	[redacted]										PTFE	n/a	n/a	[illegible]	11128633	11128633	11128633
PM1607	Pressure Sensor	[redacted]			10	-25...150 °C -13...302 °F	G1 EXTERNAL SEALING CONE	1.4435	X2CrNiMo18-14-3	DIN EN 10088-3	80255344	11128644	1 bar	AL2O3 99.9%	n/a	n/a	[illegible]	11128644	[redacted]										PTFE	n/a	n/a	[illegible]	11128644	11128644	11128644
PM1608	Pressure Sensor	[redacted]			10	-25...150 °C -13...302 °F	G1 EXTERNAL SEALING CONE	1.4435	X2CrNiMo18-14-3	DIN EN 10088-3	80233143	11128645	0,25 bar	AL2O3 99.9%	n/a	n/a	[illegible]	11128645	[redacted]										PTFE	n/a	n/a	[illegible]	11128645	11128645	11128645
PM1609	Pressure Sensor	[redacted]			10	-25...150 °C -13...302 °F	G1 EXTERNAL SEALING CONE	1.4435	X2CrNiMo18-14-3	DIN EN 10088-3	80255344	11128644	1 bar	AL2O3 99.9%	n/a	n/a	[illegible]	11128644	[redacted]										PTFE	n/a	n/a	[illegible]	11128644	11128644	11128644

THIS IS PART OF CRN 0F20267.5
Technical Standards & Safety Authority
Boilers & Pressure Vessels
Safety Program

IFM Pressure Sensors - CRN Scope of Registration

Design Code: ASME B31.3 2014 Edition
Design Pressure and Temperature: See Chart Below
Hydrotest Pressure: See Chart Below
Corrosion Allowance: None
Impact Testing: Overkill per paragraph 323.2.2
Radiography: None

Nearest equivalent ASME or ASTM material specification:		
1.4435	ASTM A276 Type 316L	UNS S31603
CW614N	ASTM B453	UNS C36500

Cat. No.	Description	Pressure / bar				Temp. Range	1: Process Connection						2: Pressure Cell					3: Cell Fixing					4: Gasket Support					5: Gasket					Assembly Group / Dimension Drawing	Grouping Reason
		Tested Bursting Pressure B	Factor of safety	Max. MAWP	MAWP in Data Sheet		Dimension	Material Number	Material Name	ref. to Standard	Art. No.	Refer to Assembly Drawing	Nominal Pressure	Material Number	Material Name	ref. to Standard	Art. No.	Refer to Assembly Drawing	Material Number	Material Name	ref. to Standard	Art. No.	Refer to Assembly Drawing	Material Number	Material Name	ref. to Standard	Art. No.	Refer to Assembly Drawing	Material Number	Material Name	ref. to Standard	Art. No.	Refer to Assembly Drawing	Drawing No.	Drawing No.
PM1614	Pressure Sensor	[redacted]			55	-25...150 °C -13...302 °F	G1 EXTERNAL SEALING CONE	1.4435	X2CrNiMo18-14-3	DIN EN 10088-3	80269344	11128633	16 bar	Al2O3 99.9%	n/a	n/a	80236614	11128633	[redacted]									PTFE	n/a	n/a	553739	11128633	11128633	11128633
PM1613	Pressure Sensor				30	-25...150 °C -13...302 °F	G1 EXTERNAL SEALING CONE	1.4435	X2CrNiMo18-14-3	DIN EN 10088-3	80255344	11128659	6 bar	Al2O3 99.9%	n/a	n/a	556569	11128633										PTFE	n/a	n/a	553739	11128633	11128633	11128633
PM1617	Pressure Sensor				15	-25...150 °C -13...302 °F	G1 EXTERNAL SEALING CONE	1.4435	X2CrNiMo18-14-3	DIN EN 10088-3	80269344	11128633	1,6 bar	Al2O3 99.9%	n/a	n/a	80236653	11128633										PTFE	n/a	n/a	553739	11128633	11128633	11128633
PM1689	Pressure Sensor				4	-25...150 °C -13...302 °F	G1 EXTERNAL SEALING CONE	1.4435	X2CrNiMo18-14-3	DIN EN 10088-3	80251143	11128645	0,1 bar	Al2O3 99.9%	n/a	n/a	556568	11128645										PTFE	n/a	n/a	553736	11128645	11128645	11128645
PM1709	Pressure Sensor				60	-25...150 °C -13...302 °F	G1 EXTERNAL ASEPTOFLEX VARIO	1.4435	X2CrNiMo18-14-3	DIN EN 10088-3	80255341	11128653	25 bar	Al2O3 99.9%	n/a	n/a	553353	11128653										PTFE	n/a	n/a	553739	11128653	11128653	11128653
PM1704	Pressure Sensor				50	-25...150 °C -13...302 °F	G1 EXTERNAL ASEPTOFLEX VARIO	1.4435	X2CrNiMo18-14-3	DIN EN 10088-3	80255341	11128653	10 bar	Al2O3 99.9%	n/a	n/a	553354	11128653										PTFE	n/a	n/a	553739	11128653	11128653	11128653
PM1708	Pressure Sensor				30	-25...150 °C -13...302 °F	G1 EXTERNAL ASEPTOFLEX VARIO	1.4435	X2CrNiMo18-14-3	DIN EN 10088-3	80255341	11128653	4 bar	Al2O3 99.9%	n/a	n/a	553351	11128653										PTFE	n/a	n/a	553739	11128653	11128653	11128653
PM1705	Pressure Sensor				20	-25...150 °C -13...302 °F	G1 EXTERNAL ASEPTOFLEX VARIO	1.4435	X2CrNiMo18-14-3	DIN EN 10088-3	80255341	11128653	2,5 bar	Al2O3 99.9%	n/a	n/a	553355	11128653										PTFE	n/a	n/a	553739	11128653	11128653	11128653
PM1707	Pressure Sensor				10	-25...150 °C -13...302 °F	G1 EXTERNAL ASEPTOFLEX VARIO	1.4435	X2CrNiMo18-14-3	DIN EN 10088-3	80233008	11128659	1 bar	Al2O3 99.9%	n/a	n/a	553357	11128659										PTFE	n/a	n/a	553739	11128659	11128659	11128659
PM1706	Pressure Sensor				10	-25...150 °C -13...302 °F	G1 EXTERNAL ASEPTOFLEX VARIO	1.4435	X2CrNiMo18-14-3	DIN EN 10088-3	80231172	11128662	0,25 bar	Al2O3 99.9%	n/a	n/a	553358	11128662										PTFE	n/a	n/a	553736	11128662	11128662	11128662
PM1789	Pressure Sensor				10	-25...150 °C -13...302 °F	G1 EXTERNAL ASEPTOFLEX VARIO	1.4435	X2CrNiMo18-14-3	DIN EN 10088-3	80255341	11128659	1 bar	Al2O3 99.9%	n/a	n/a	553357	11128659										PTFE	n/a	n/a	553739	11128659	11128659	11128659
PM171A	Pressure Sensor				60	-25...150 °C -13...302 °F	G1 EXTERNAL ASEPTOFLEX VARIO	1.4435	X2CrNiMo18-14-3	DIN EN 10088-3	80255341	11128659	16 bar	Al2O3 99.9%	n/a	n/a	80236654	11128659										PTFE	n/a	n/a	553736	11128653	11128653	11128653
PM1715	Pressure Sensor				30	-25...150 °C -13...302 °F	G1 EXTERNAL ASEPTOFLEX VARIO	1.4435	X2CrNiMo18-14-3	DIN EN 10088-3	80255341	11128653	6 bar	Al2O3 99.9%	n/a	n/a	556565	11128653										PTFE	n/a	n/a	553739	11128653	11128653	11128653
PM1717	Pressure Sensor				15	-25...150 °C -13...302 °F	G1 EXTERNAL ASEPTOFLEX VARIO	1.4435	X2CrNiMo18-14-3	DIN EN 10088-3	80255341	11128653	1,6 bar	Al2O3 99.9%	n/a	n/a	80236653	11128653										PTFE	n/a	n/a	553736	11128653	11128653	11128653
[redacted]	Pressure Sensor				4	-25...150 °C -13...302 °F	G1 EXTERNAL ASEPTOFLEX VARIO	1.4435	X2CrNiMo18-14-3	DIN EN 10088-3	80234172	11128662	0,1 bar	Al2O3 99.9%	n/a	n/a	556568	11128662										PTFE	n/a	n/a	553738	11128662	11128662	11128662

PM1789

IFM Flow Sensors - CRN Scope of Registration

Design Code: ASME B31.3 2014 Edition
Design Temperature: See Chart Below
Burst Pressure: See Chart Below
Corrosion Allowance: None
Impact Testing: Exempt per paragraph 323.2.2
Radiography: None

Nearest equivalent ASME or ASTM material specification:		
1.4404	ASTM A276 Type 316L	UNS S31603
1.4310	ASTM A240 Type 301	UNS S30100
1.4301	ASTM A193 Type 304	UNS S30400

Cat. No.	Description	Pressure / bar				Temp. Range	1: Process Connection						2: gasket process connection					3: Sensor tube					4: Sensor with gasket					5: adapter nut					
		Tested Burstng Pressure B	Factor of safety	Rated MAWP	MAWP in Data Sheet		Dimension	Material Number	Material Name	ref. to Standard	Art. No.	Refer to Assembly Drawing	Material Number	Material Name	ref. to Standard	Art. No.	Refer to Assembly Drawing	Material Number	Material Name	ref. to Standard	Art. No.	Refer to Assembly Drawing	Material Number	Material Name	ref. to Standard	Art. No.	Refer to Assembly Drawing	Material Number	Material Nome	ref. to Standard	Art. No.	Refer to Assembly Drawing	M
SV4200	tested sensor				3.9	-10...90 °C -14...194 °F	G1/2" female	1.4404	X2CrNiMo17-12-2	DIN EN 10088-3: 2014	80227509	11120324	na	FKM	na	80223885	11120324										1.4404	X2CrNiMo17-12-2	DIN EN 10088-3: 2014	80227508	11120324	
SV4204	ref to SV4200				3.9	-10...90 °C -14...194 °F	G1/2" female	1.4404	X2CrNiMo17-12-2	DIN EN 10088-3: 2014	80227509	11120324	na	FKM	na	80223885	11120324										1.4404	X2CrNiMo17-12-2	DIN EN 10088-3: 2014	80227508	11120324	
SV4610	ref to SV4200				3.9	-10...90 °C -14...194 °F	1/2-14NPT female	1.4404	X2CrNiMo17-12-2	DIN EN 10088-3: 2014	80227504	11120324	na	FKM	na	80223885	11120324										1.4404	X2CrNiMo17-12-2	DIN EN 10088-3: 2014	80227508	11120324	
SV4614	ref to SV4200				3.9	-10...90 °C -14...194 °F	1/2-14NPT female	1.4404	X2CrNiMo17-12-2	DIN EN 10088-3: 2014	80227504	11120324	na	FKM	na	80223885	11120324										1.4404	X2CrNiMo17-12-2	DIN EN 10088-3: 2014	80227508	11120324	
SV5200	tested sensor				4.8	-10...90 °C -14...194 °F	G1/2" female	1.4404	X2CrNiMo17-12-2	DIN EN 10088-3: 2014	80227509	11120324	na	FKM	na	80223885	11120324										1.4404	X2CrNiMo17-12-2	DIN EN 10088-3: 2014	80227508	11120324	
SV5204	ref to SV5200				4.8	-10...90 °C -14...194 °F	G1/2" female	1.4404	X2CrNiMo17-12-2	DIN EN 10088-3: 2014	80227509	11120324	na	FKM	na	80223885	11120324										1.4404	X2CrNiMo17-12-2	DIN EN 10088-3: 2014	80227508	11120324	
SV5610	ref to SV5200				4.8	-10...90 °C -14...194 °F	1/2-14NPT female	1.4404	X2CrNiMo17-12-2	DIN EN 10088-3: 2014	80227504	11120324	na	FKM	na	80223885	11120324										1.4404	X2CrNiMo17-12-2	DIN EN 10088-3: 2014	80227508	11120324	
SV5614	ref to SV5200				4.8	-10...90 °C -14...194 °F	1/2-14NPT female	1.4404	X2CrNiMo17-12-2	DIN EN 10088-3: 2014	80227504	11120324	na	FKM	na	80223885	11120324										1.4404	X2CrNiMo17-12-2	DIN EN 10088-3: 2014	80227508	11120324	
SV7200	tested sensor				4.3	-10...90 °C -14...194 °F	G3/4" female	1.4404	X2CrNiMo17-12-2	DIN EN 10088-3: 2014	80228487	11120564	na	FKM	na	80223884	11120564										1.4404	X2CrNiMo17-12-2	DIN EN 10088-3: 2014	80228486	11120564	
SV7204	ref to SV7200				4.3	-10...90 °C -14...194 °F	G3/4" female	1.4404	X2CrNiMo17-12-2	DIN EN 10088-3: 2014	80228487	11120564	na	FKM	na	80223884	11120564										1.4404	X2CrNiMo17-12-2	DIN EN 10088-3: 2014	80228486	11120564	
SV7610	ref to SV7200				4.3	-10...90 °C -14...194 °F	3/4-14 NPT female	1.4404	X2CrNiMo17-12-2	DIN EN 10088-3: 2014	80229060	11120564	na	FKM	na	80223884	11120564										1.4404	X2CrNiMo17-12-2	DIN EN 10088-3: 2014	80228486	11120564	
SV7614	ref to SV7200				4.3	-10...90 °C -14...194 °F	3/4-14 NPT female	1.4404	X2CrNiMo17-12-2	DIN EN 10088-3: 2014	80229060	11120564	na	FKM	na	80223884	11120564										1.4404	X2CrNiMo17-12-2	DIN EN 10088-3: 2014	80228486	11120564	

THIS IS PART OF
CRN OF20267.5
Technical Standards & Safety Authority
Boilers & Pressure Vessels
Safety Program

IFM Flow Sensors - CRN Scope of Registration

Design Code: ASME B31.3 2014 Edition
Design Temperature: See Chart Below
Burst Pressure: See Chart Below
Corrosion Allowance: None
Impact Testing: Exempt per paragraph 323.2.2
Radiography: None

THIS IS PART OF
CRN
OF 20267.5
Technical Standards & Safety Authority
Boilers, Pressure Vessels
Safety Group

Nearest equivalent ASME or ASTM material specification:		
1.4404	ASTM A276 Type 316L	UNS S31603
1.4571	ASTM A276 Type 316Ti	UNS S31635
1.4301	ASTM A276 Type 304	UNS S30400
EN AW-6082	6082 ASTM B221	UNS A96082
EN AW-6060	6060 ASTM B221	UNS A96060
2.4610	ASTM B574	UNS N06455

Cat. No.	Description	Pressure / bar				Temp. Range	1: Process Connection						2: gasket process connetction					3: Sensor tube					4: Sensor electrode					5: temperature electrode					Mat Num
		Tested Bursting Pressure B	Factor of safety	Rated MAWP	MAWP in Data Sheet		Dimension	Material Number	Material Name	ref. to Standard	Art. No.	Refer to Assembly Drawing	Material Number	Material Name	ref. to Standard	Art. No.	Refer to Assembly Drawing	Material Number	Material Name	ref. to Standard	Art. No.	Refer to Assembly Drawing	Material Number	Material Name	ref. to Standard	Art. No.	Refer to Assembly Drawing	Material Number	Material Name	ref. to Standard	Art. No.	Refer to Assembly Drawing	
SM2000	tested sensor				16.5	-10...70 °C -14...158 °F	G2" male	1.4571	X6CrNiMoTi17-12-2	DIN EN 10088: 2014	50025336	11119889	na	FKM	na	50024186	11119889															
SM2001	ref to SM2000				16.5	-10...70 °C -14...158 °F	G2" male	1.4571	X6CrNiMoTi17-12-2	DIN EN 10088: 2014	50025336	11119889	na	FKM	na	50024186	11119889															
SM2004	ref to SM2000				16.5	-10...70 °C -14...158 °F	G2" male	1.4571	X6CrNiMoTi17-12-2	DIN EN 10088: 2014	50025336	11119889	na	FKM	na	50024186	11119889															
SM2100	ref to SM2000				16.5	-10...70 °C -14...158 °F	G2" male	1.4571	X6CrNiMoTi17-12-2	DIN EN 10088: 2014	50025336	11119889	na	EPDM	na	80229726	11119889															
SM2601	ref to SM2000				16.5	-10...70 °C -14...158 °F	2-11,5NPT female	1.4571	X6CrNiMoTi17-12-2	DIN EN 10088: 2014	80012058	11119889	na	FKM	na	50024186	11119889															
SM2604	ref to SM2000				16.5	-10...70 °C -14...158 °F	2-11,5NPT female	1.4571	X6CrNiMoTi17-12-2	DIN EN 10088: 2014	80012058	11119889	na	FKM	na	50024186	11119889															
SM9000	ref to SM2000				16.5	-10...70 °C -14...158 °F	G11/2" male	1.4571	X6CrNiMoTi17-12-2	DIN EN 10088: 2014	50025336	11119889	na	FKM	na	50024186	11119889															
SM9001	ref to SM2000				16.5	-10...70 °C -14...158 °F	G11/2" male	1.4571	X6CrNiMoTi17-12-2	DIN EN 10088: 2014	50025336	11119889	na	FKM	na	50024186	11119889															
SM9004	ref to SM2000				16.5	-10...70 °C -14...158 °F	G11/2" male	1.4571	X6CrNiMoTi17-12-2	DIN EN 10088: 2014	50025336	11119889	na	FKM	na	50024186	11119889															
SM9100	ref to SM2000				16.5	-10...70 °C -14...158 °F	G11/2" male	1.4571	X6CrNiMoTi17-12-2	DIN EN 10088: 2014	50025336	11119889	na	EPDM	na	80229726	11119889															
SM9601	ref to SM2000				16.5	-10...70 °C -14...158 °F	11/2-11,5NPT female	1.4571	X6CrNiMoTi17-12-2	DIN EN 10088: 2014	80012057	11119889	na	FKM	na	50024186	11119889															
SM9604	ref to SM2000				16.5	-10...70 °C -14...158 °F	11/2-11,5NPT female	1.4571	X6CrNiMoTi17-12-2	DIN EN 10088: 2014	80012057	11119889	na	FKM	na	50024186	11119889															
SM6000	tested sensor				17.7	-10...70 °C -14...158 °F	G 1/2" male	1.4404	X2CrNiMo17-12-2	DIN EN 10088: 2014	50014379 50014387	11119987	na	FKM	na	50017755	11119987															
SM6001	ref to SM6000				17.7	-10...70 °C -14...158 °F	G 1/2" male	1.4404	X2CrNiMo17-12-2	DIN EN 10088: 2014	50014379 50014387	11119987	na	FKM	na	50017755	11119987															
SM6004	ref to SM6000				17.7	-10...70 °C -14...158 °F	G 1/2" male	1.4404	X2CrNiMo17-12-2	DIN EN 10088: 2014	50014379 50014387	11119987	na	FKM	na	50017755	11119987															
SM6050	ref to SM6000				17.7	-10...70 °C -14...158 °F	G 1/2" male	1.4404	X2CrNiMo17-12-2	DIN EN 10088: 2014	50014379 50014387	11119987	na	FKM	na	50017755	11119987															
SM6100	ref to SM6000				17.7	-10...70 °C -14...158 °F	G 1/2" male	1.4404	X2CrNiMo17-12-2	DIN EN 10088: 2014	50014379 50014387	11119987	na	EPDM	na	80229663	11119987															
SM6601	ref to SM6000				17.7	-10...70 °C -14...158 °F	1/2-14 NPT female	1.4404	X2CrNiMo17-12-2	DIN EN 10088: 2014	80012032 80010316	11119987	na	FKM	na	50017755	11119987															
SM6604	ref to SM6000				17.7	-10...70 °C -14...158 °F	1/2-14 NPT female	1.4404	X2CrNiMo17-12-2	DIN EN 10088: 2014	80012032 80010316	11119987	na	FKM	na	50017755	11119987															
SM7000	tested sensor				11.2	-10...70 °C -14...158 °F	G 3/4" male	1.4404	X2CrNiMo17-12-2	DIN EN 10088: 2014	50014420 50014421	11120033	na	FKM	na	50014580	11120033															
SM7001	ref to SM7000				11.2	-10...70 °C -14...158 °F	G 3/4" male	1.4404	X2CrNiMo17-12-2	DIN EN 10088: 2014	50014420 50014421	11120033	na	FKM	na	50014580	11120033															
SM7004	ref to SM7000				11.2	-10...70 °C -14...158 °F	G 3/4" male	1.4404	X2CrNiMo17-12-2	DIN EN 10088: 2014	50014420 50014421	11120033	na	FKM	na	50014580	11120033															

SM7050	ref to SM70	11.2	-10...70 °C -14...158 °F	G 3/4" male	1.4404	X2CrNiMo17-12-2	DIN EN 10088: 2014	50014420 50014421	11120033	na	FKM	na	50014580	11120033		
SM7100	ref to SM700	11.2	-10...70 °C -14...158 °F	G 3/4" male	1.4404	X2CrNiMo17-12-2	DIN EN 10088: 2014	50014420 50014421	11120033	na	EPDM	na	80229665	11120033		
SM7601	ref to SM700	11.2	-10...70 °C -14...158 °F	3/4-14 NPT female	1.4404	X2CrNiMo17-12-2	DIN EN 10088: 2014	80012033 80012034	11120033	na	FKM	na	50014580	11120033		
SM7604	ref to SM700	11.2	-10...70 °C -14...158 °F	3/4-14 NPT female	1.4404	X2CrNiMo17-12-2	DIN EN 10088: 2014	80012033 80012034	11120033	na	FKM	na	50014580	11120033		
SM0505	ref to SM700	11.2	-10...70 °C -14...158 °F	G 3/4" male	1.4404	X2CrNiMo17-12-2	DIN EN 10088: 2014	50014420 50014421	11120033	na	FKM	na	50014580	11120033		
SM8000	ref to SM7000	11.2	-10...70 °C -14...158 °F	G 1" male	1.4404	X2CrNiMo17-12-2	DIN EN 10088: 2014	50014422 50014425	11120033	na	FKM	na	50014580	11120033		
SM8001	ref to SM7000	11.2	-10...70 °C -14...158 °F	G 1" male	1.4404	X2CrNiMo17-12-2	DIN EN 10088: 2014	50014422 50014425	11120033	na	FKM	na	50014580	11120033		
SM8004	ref to SM7000	11.2	-10...70 °C -14...158 °F	G 1" male	1.4404	X2CrNiMo17-12-2	DIN EN 10088: 2014	50014422 50014425	11120033	na	FKM	na	50014580	11120033		
SM8050	ref to SM7000	11.2	-10...70 °C -14...158 °F	G 1" male	1.4404	X2CrNiMo17-12-2	DIN EN 10088: 2014	50014422 50014425	11120033	na	FKM	na	50014580	11120033		
SM8100	ref to SM7000	11.2	-10...70 °C -14...158 °F	G 1" male	1.4404	X2CrNiMo17-12-2	DIN EN 10088: 2014	50014422 50014425	11120033	na	EPDM	na	80229665	11120033		
SM8601	ref to SM7000	11.2	-10...70 °C -14...158 °F	1-11,5 NPT female	1.4404	X2CrNiMo17-12-2	DIN EN 10088: 2014	80012035 80012056	11120033	na	FKM	na	50014580	11120033		
SM8604	ref to SM7000	11.2	-10...70 °C -14...158 °F	1-11,5 NPT female	1.4404	X2CrNiMo17-12-2	DIN EN 10088: 2014	80012035 80012056	11120033	na	FKM	na	50014580	11120033		

Operating instructions
Magnetic-inductive flow meter

SM4x00
SM6x00
SM7x00
SM8x00
SM6x01
SM7x01
SM8x01

UK

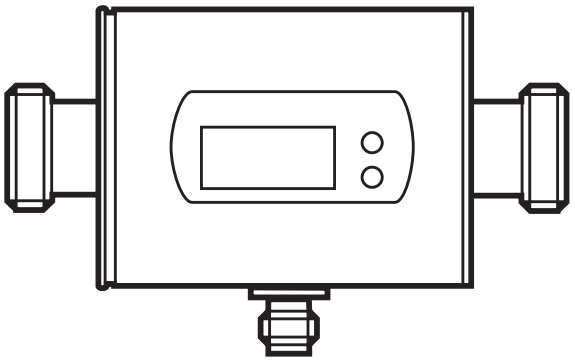

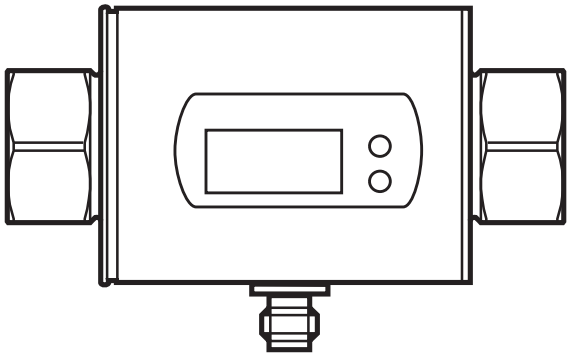

11393456 / 00 06 / 2020

Contents

1 Preliminary note 4

2 Safety instructions 4

3 Functions and features 5

4 Function 5
- 4.1 Processing of the measured signals 6
- 4.2 Direction of flow 6
  - 4.2.1 Determination of the direction of flow (Fdir) 6
  - 4.2.2 Detection of the direction of flow (dir.F) 7
- 4.3 Consumed quantity monitoring (ImP) 7
  - 4.3.1 Display and counting method of the quantity meter 8
  - 4.3.2 Consumed quantity monitoring via pulse output 8
  - 4.3.3 Consumed quantity monitoring via preset counter 9
- 4.4 Switching function 10
- 4.5 Analogue function 11
- 4.6 Measured value damping (dAP) 13
- 4.7 Start-up delay (dST) 13
- 4.8 Low flow cut-off (LFC) 15
- 4.9 IO-Link 15

5 Mounting 16
- 5.1 Recommended installation position 16
- 5.2 Not recommended installation position 17
- 5.3 Grounding 18
- 5.4 Installation in pipes 19

6 Electrical connection 20

7 Operating and display elements 22

8 Menu 24

9 Set-up 26

10 Parameter setting 26
- 10.1 Parameter setting in general 27
  - 10.1.1 Change to the menu "Extended functions" 27
  - 10.1.2 Locking / Unlocking 28
  - 10.1.3 Timeout 28

10.2 Settings for volumetric flow monitoring 28
10.2.1 Limit monitoring volumetric flow (OUT1) 28
10.2.2 Limit monitoring volumetric flow (OUT2) 28
10.2.3 Analogue output flow rate (OUT2) 28
10.2.4 Detection of the direction of flow (OUT1 or OUT2) 28
10.3 Settings for consumed quantity monitoring 29
10.3.1 Quantity monitoring by pulse output (OUT1) 29
10.3.2 Quantity monitoring by preset counter (OUT1) 29
10.3.3 Pulse value 29
10.3.4 Manual counter reset 29
10.3.5 Time-controlled counter reset 29
10.3.6 Deactivation of the counter reset 30
10.3.7 Counter reset using an external signal 30
10.4 Settings for temperature monitoring 30
10.4.1 Limit monitoring temperature (OUT2) 30
10.4.2 Analogue output temperature (OUT2) 30
10.5 User settings (optional) 30
10.5.1 Standard unit of measurement for volumetric flow 30
10.5.2 Standard display 31
10.5.3 Output logic 31
10.5.4 Start-up delay 31
10.5.5 Measured value damping 31
10.5.6 Error behaviour of the outputs 31
10.5.7 Low flow cut-off 32
10.5.8 Counting method of the totaliser 32
10.5.9 Direction of flow 32
10.6 Service functions 32
10.6.1 Read min/max values 32
10.6.2 Restoring the factory settings 32

11 Operation 33
11.1 Reading the process value 33
11.2 Changing the process value display in the RUN mode 33
11.3 Reading the set parameters 33

12 Troubleshooting 34

13 Technical data 35

14 Factory setting 36

1 Preliminary note

▶ Instructions

> Reaction, result

[…] Designation of keys, buttons or indications

→ Cross-reference



Important note
Non-compliance may result in malfunction or interference.



Information
Supplementary note.

⚠ CAUTION

Warning of personal injury.
Slight reversible injuries may result.

2 Safety instructions

- Read this document before setting up the product and keep it during the entire service life.
- The product must be suitable for the corresponding applications and environmental conditions without any restrictions.
- Only use the product for its intended purpose (→ 3 Functions and features).
- Only use the product for permissible media (→ Technical data).
- If the operating instructions or the technical data are not adhered to, personal injury and/or damage to property may occur.
- The manufacturer assumes no liability or warranty for any consequences caused by tampering with the product or incorrect use by the operator.
- Installation, electrical connection, set-up, operation and maintenance of the unit must be carried out by qualified personnel authorised by the machine operator.
- Protect units and cables against damage.
- For medium temperatures above 50 °C (122 °F) some parts of the housing can heat up to over 65 °C (149 °F). Moreover, during installation or in case of a fault (e.g. housing damage) media under high pressure or hot media can leak from the system. To avoid personal injury, take the following measures:

- ▶ Install the units according to the applicable rules and regulations.
- ▶ Ensure that the system is free of pressure during installation.
- ▶ Protect the housing against contact with flammable substances and unintentional contact. To do so, equip the units with suitable protection (e.g. protective cover).
- ▶ Do not press the pushbuttons manually. instead use another object (e.g. ballpoint pen).

3 Functions and features

The unit monitors liquid media. It detects the 3 process categories volumetric flow, consumed quantity, medium temperature.

Pressure Equipment Directive (PED)

The units comply with the Pressure Equipment Directive and are designed and manufactured for group 2 fluids in accordance with the sound engineering practice. Use of group 1 fluids on request.

Application area

Conductive liquids with the following properties:

- Conductivity: ≥ 20 µS/cm
- Viscosity: < 70 mm^2/s at 40 °C; < 70 cSt at 104 °F

4 Function

- The unit detects the flow based on the magnetic-inductive volumetric flow measuring principle.
- The unit also detects the medium temperature.
- It features an IO-Link interface.
- The unit displays the current process value.

4.1 Processing of the measured signals

The unit generates 2 output signals according to the parameter settings:

OUT1/IO-Link: 4 selection options	Parameter setting
- Switching signal for volumetric flow quantity limit	→ 10.2.1
- Pulse signal for quantity meter	→ 10.3.1
- Switching signal for preset counter	→ 10.3.2
- Switching signal for direction of flow	→ 10.2.4

OUT2: 6 selection options	Parameter setting
- Switching signal for volumetric flow quantity limit	→ 10.2.2
- Switching signal for temperature limit	→ 10.4.1
- Analogue signal for volumetric flow quantity	→ 10.2.3
- Analogue signal for temperature	→ 10.4.2
- Switching signal for direction of flow	→ 10.2.4
- Input for external counter reset signal (InD)	→ 10.3.7

4.2 Direction of flow

In addition to the flow velocity and the volumetric flow quantity, the unit also detects the direction of flow.

4.2.1 Determination of the direction of flow (Fdir)

An arrow with the text "flow direction" on the unit indicates the positive flow direction. The flow direction can be inversed (→ 10.5.9).

▶ Use the supplied label to mark the changed flow direction (new positive direction of flow).

Flow...	Process value display
corresponds to the marked flow direction	+ (positive)
against the marked flow direction	- (negative)

4.2.2 Detection of the direction of flow (dir.F)

When dir.F is activated (→ 10.2.4), the direction of flow is indicated by a switching signal.

The output is switched on until the set minimum volumetric flow quantity in negative direction of flow (- LFC) is not reached (1).
Afterwards the following applies:

- The output switches ON when + LFC is exceeded (2).
- The output switches OFF when - LFC is not reached (3).

UK

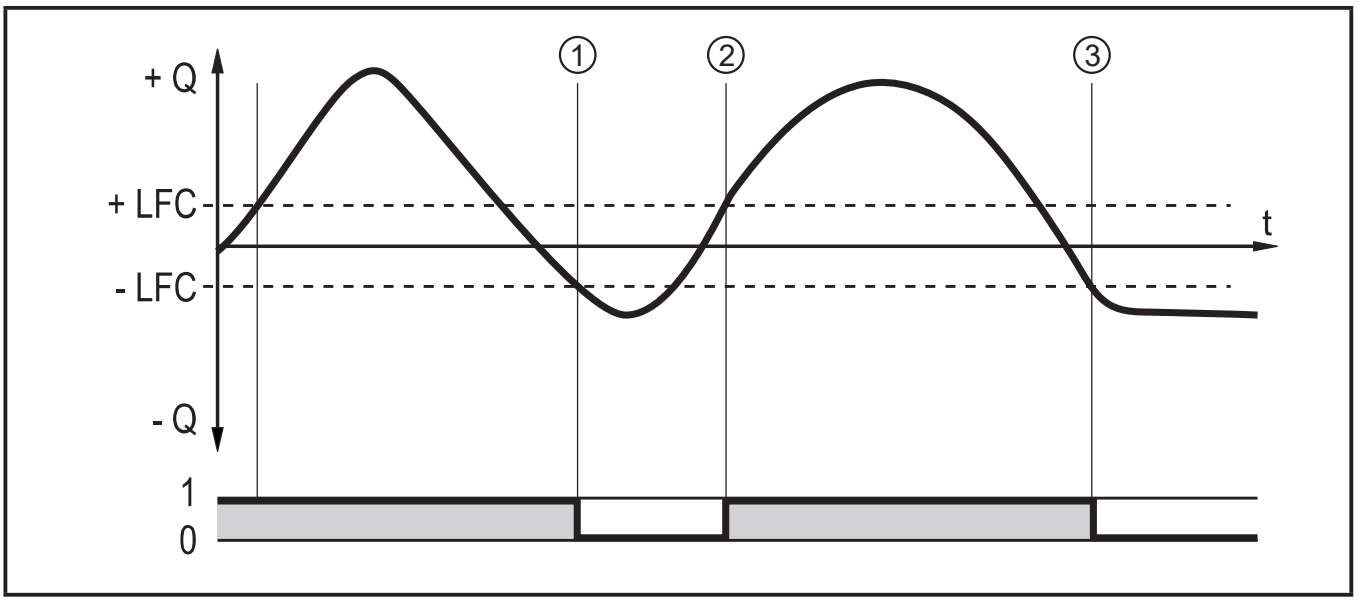

+ Q : Flow in positive direction of flow
- Q : Flow in negative direction of flow
+ LFC: Minimum volumetric flow quantity in positive direction of flow
- LFC : Minimum volumetric flow quantity in negative direction of flow

Positive direction of flow = marked direction of flow,
with the factory setting marked by the arrow on the unit or after change via Fdir marked by the attached label (→ 4.2.1).

4.3 Consumed quantity monitoring (ImP)

The unit has an internal quantity meter (totaliser). It continuously totals the consumed quantity after the last reset. Pulse signals or a switching signal can be used to monitor the consumed quantity.
→ 10.3.1 Quantity monitoring by pulse output (OUT1)
→ 10.3.2 Quantity monitoring by preset counter (OUT1)

4.3.1 Display and counting method of the quantity meter

Meter reading:

- The current meter count can be indicated (→ 11.2).
- In addition the value before the last reset is saved. This value can also be displayed (→ 11.2).

The meter saves the totalled volumetric flow quantity every 10 minutes. After a power failure this value is available as the current meter reading. If a time-controlled reset is set, the elapsed time of the set reset interval is also saved. So the possible data loss can be maximum 10 minutes.

Counter reset:

- There are different ways to reset the quantity meter.
  → 10.3.4 Manual counter reset
  → 10.3.5 Time-controlled counter reset
  → 10.3.7 Counter reset using an external signal
- If the quantity meter is not reset using one of the above-mentioned processes, an automatic reset will be made when the maximum volumetric flow quantity that can be displayed is exceeded (overflow).

Taking into consideration the direction of flow:

- The quantity meter takes account of the flow direction for totalisation. The following counting methods can be defined via the parameter [FPro] (→ 10.5.8):

[FPro]	Counting method
0+	Negative flow values (against the marked direction of flow) are not taken into consideration for totalling.
– +	Negative flow values are subtracted from the consumed quantity.

4.3.2 Consumed quantity monitoring via pulse output

Output 1 indicates a pulse signal when the set volumetric flow quantity has been reached (pulse value → 10.3.3).

Depending on the setting of the counting method [FPro] totalling of the volumetric flow quantity takes into account the flow in negative direction of flow (– +) or does not take it into account (0+) → 4.3.1.

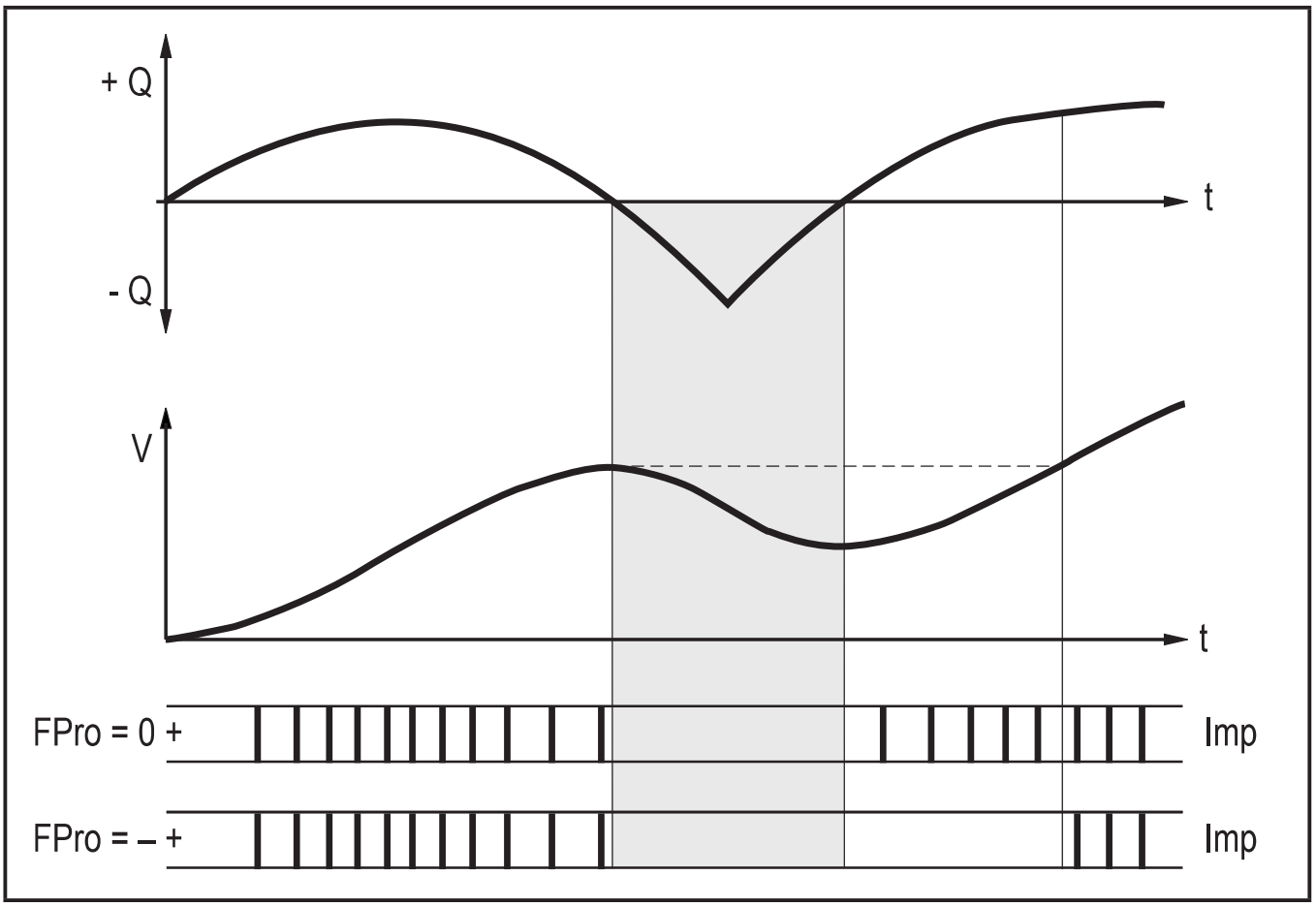

+ Q = volumetric flow quantity in positive direction
- Q = volumetric flow quantity in negative direction
V = volumetric flow quantity absolute (= sum of negative and positive flow)

4.3.3 Consumed quantity monitoring via preset counter

2 kinds of monitoring are possible which can be set via the parameter [rTo].

[rTo]	Output	Counter reset
OFF (→ 10.3.6)	OUT1 switches when the volumetric flow quantity set with [ImPS] has been reached.	The preset counter is only reset - when a manual reset is made (→ 10.3.4) or - when the maximum display range has been exceeded.
1, 2,... h 1, 2,... d 1, 2,... w (→ 10.3.5)	OUT1 switches when the volumetric flow quantity set with [ImPS] is reached within the set time.	The preset counter is reset automatically when the time has elapsed and counting starts again.

4.4 Switching function

OUTx changes its switching status if it is above or below the set switching limits (flow or temperature). Hysteresis or window function can be selected. Example of volumetric flow monitoring:

Hysteresis function

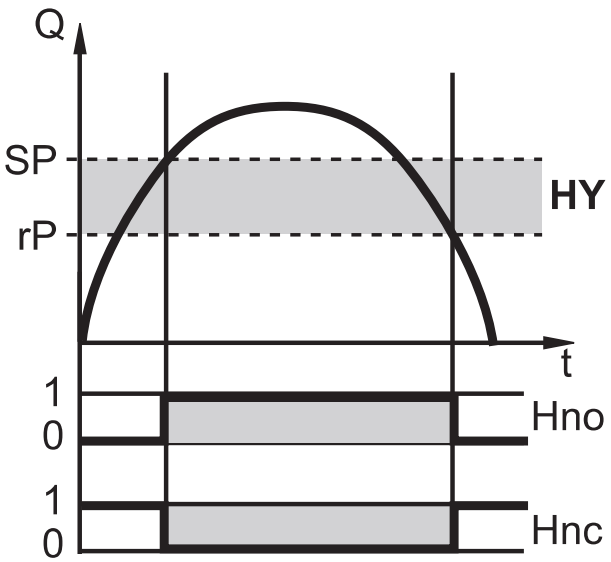

SP = set point
rP = reset point
HY = hysteresis
Hno = hysteresis NO (normally open)
Hnc = hysteresis NC (normally closed)

Window function

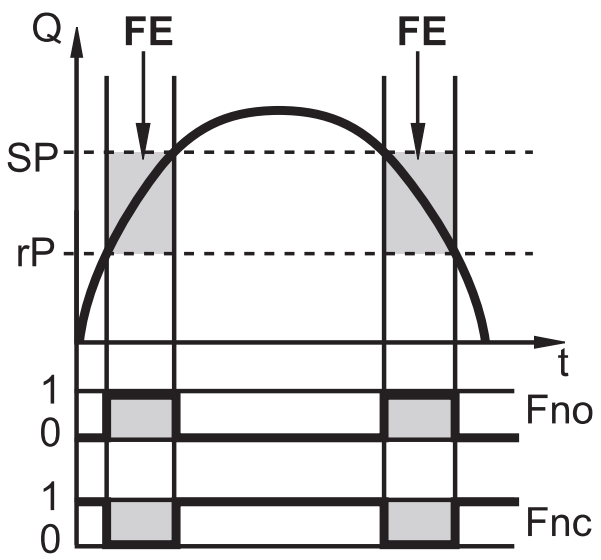

SP = upper limit
rP = lower limit
FE = window
Fno = window NO (normally open)
Fnc = window NC (normally closed)

When the hysteresis function is set, the set point [SP] is defined first and then the reset point [rP] which must have a lower value. If only the set point is changed, the reset point remains constant.

When set to the window function, the upper limit [SP] and the lower limit [rP] have a fixed hysteresis of 0.5 % of the final value of the measuring range. This keeps the switching status of the output stable if the flow rate varies slightly.

4.5 Analogue function

- The unit provides an analogue signal that is proportional to the volumetric flow quantity and the medium temperature.
- The analogue signal can be provided as current or voltage signal.
- Within the measuring range the analogue signal is 4...20 mA (current output) or 0...10 V (voltage output).
- If the measured value is outside the measuring range or in the event of an internal error, the current or voltage signals indicated in Figure 1 are provided.
- The measuring range is scalable:
  [ASP2] determines at which measured value the output signal is 4 mA or 0 V.
  [AEP2] determines at which measured value the output signal is 20 mA or 10 V.

  Minimum distance between [ASP2] and [AEP2] = 20 % of the final value of the measuring range.

MAW	Initial value of the measuring range	For non-scaled measuring range (= factory setting)
MEW	Final value of the measuring range	
ASP2	Analogue start point	For scaled measuring range
AEP2	Analogue end point	

Table 1: Definitions

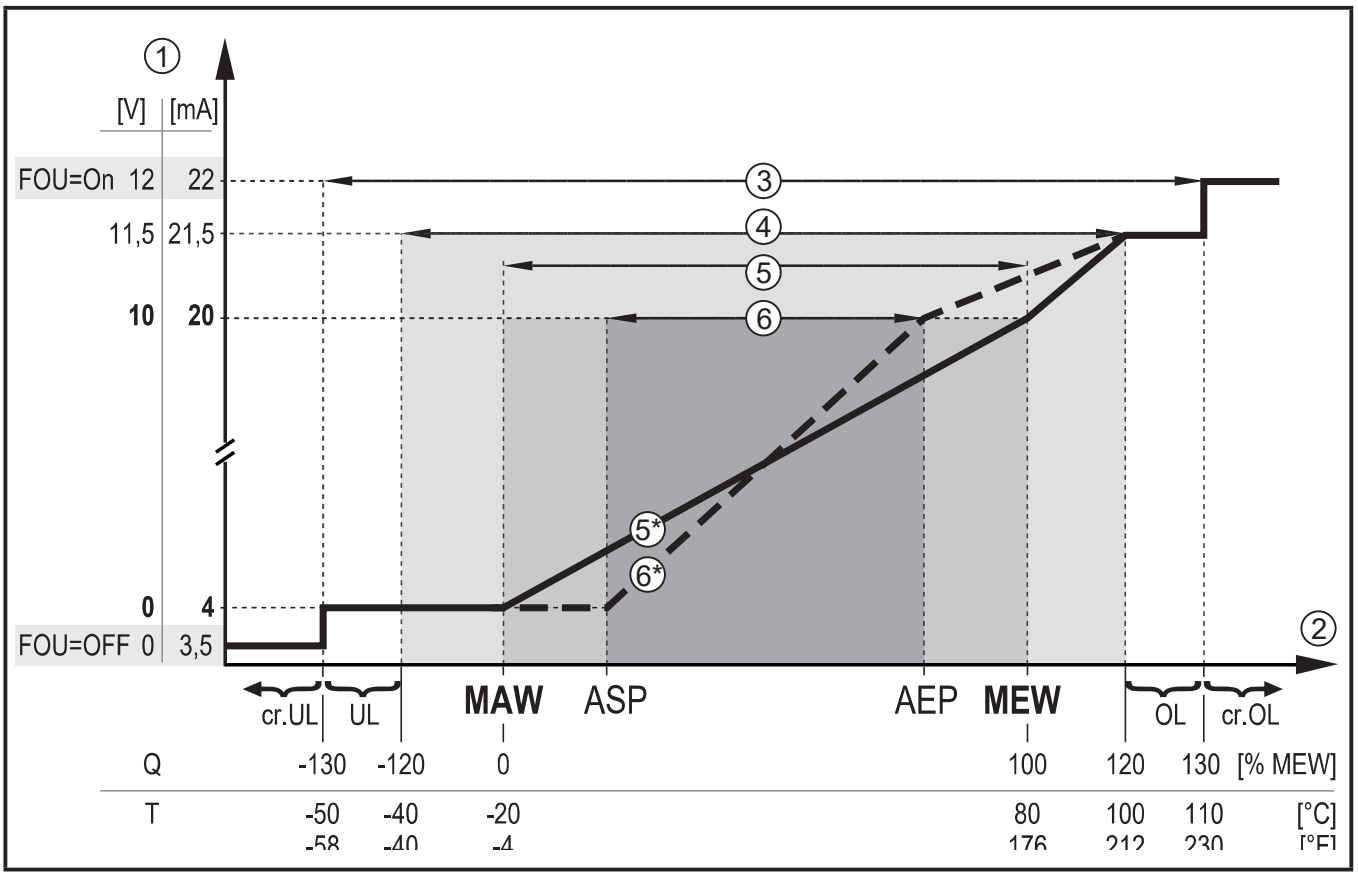

Figure 1: Characteristics of the analogue output according to the standard IEC 60947-5-7.

Q: Flow (a negative flow value means flow against the marked flow direction)
T: Temperature
UL: Below the display range
OL: Above the display range
cr.UL: Below the detection zone (error)
cr.OL: Above the detection zone (error)
FOU=On: Default setting at which the analogue signal goes to the upper final value in case of an error.*
FOU=OFF: Default setting at which the analogue signal goes to the lower final value in case of an error.*

* The type of error is displayed: cr.UL, cr.OL, Err (→ 12).

① Analogue signal (voltage or current)
② Measured value (flow or temperature)
③ Detection zone
④ Display range
⑤ Measuring range
⑤* Analogue signal in the measuring range with factory setting
⑥ Scaled measuring range
⑥* Analogue signal for scaled measuring range

4.6 Measured value damping (dAP)

The damping time allows to set after how many seconds the output signal has reached 63 % of the final value if the flow value changes suddenly. The set damping time stabilises the outputs, the display and the process value transfer via the IO-Link interface. The signals [UL] and [OL] (→ 12 Troubleshooting) are defined under consideration of the damping time.

4.7 Start-up delay (dST)

The start-up delay [dST] influences the switching outputs of the volumetric flow monitoring.

If the start-up delay is active ([dST] > [0]), note: As soon as the volumetric flow exceeds the LFC value (→ 4.8), the following processes are carried out:

> The start-up delay is activated.

> The outputs switch as programmed: ON for NO function, OFF for NC function.

After the start of the start-up delay there are 3 options:

1. The volumetric flow increases quickly and reaches the set point / good range within [dST].
   > Outputs remain active.
2. The volumetric flow increases slowly and does not reach the set point /good range within [dST] > Outputs are reset.
3. Volumetric flow quantity falls below [LFC] within [dST].
   > Outputs are reset at once; [dST] is stopped.

Example: dST for hysteresis function

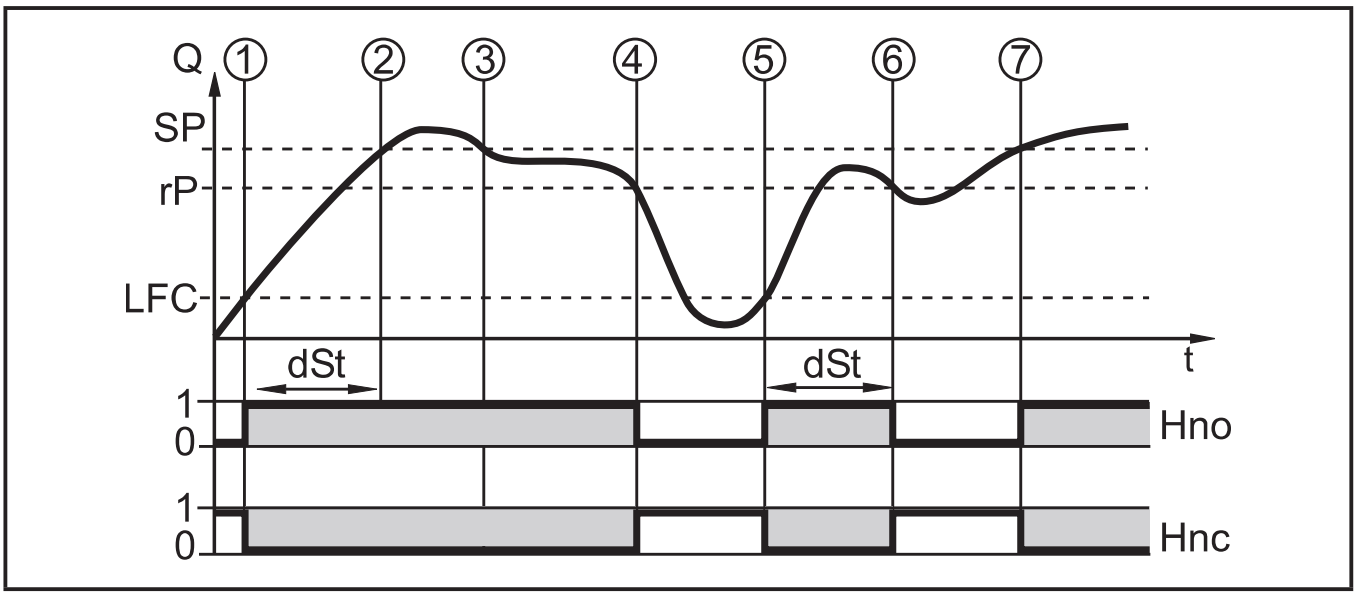

	Condition	Reaction
1	Volumetric flow quantity Q reaches LFC	dST starts, output becomes active
2	dST elapsed, Q reached SP	Output remains active
3	Q below SP but above rP	Output remains active
4	Q below rP	Output is reset
5	Q reaches again LFC	dST starts, output becomes active
6	dST elapsed, Q has not reached SP	Output is reset
7	Q reaches SP	Output becomes active

Example: dST for window function

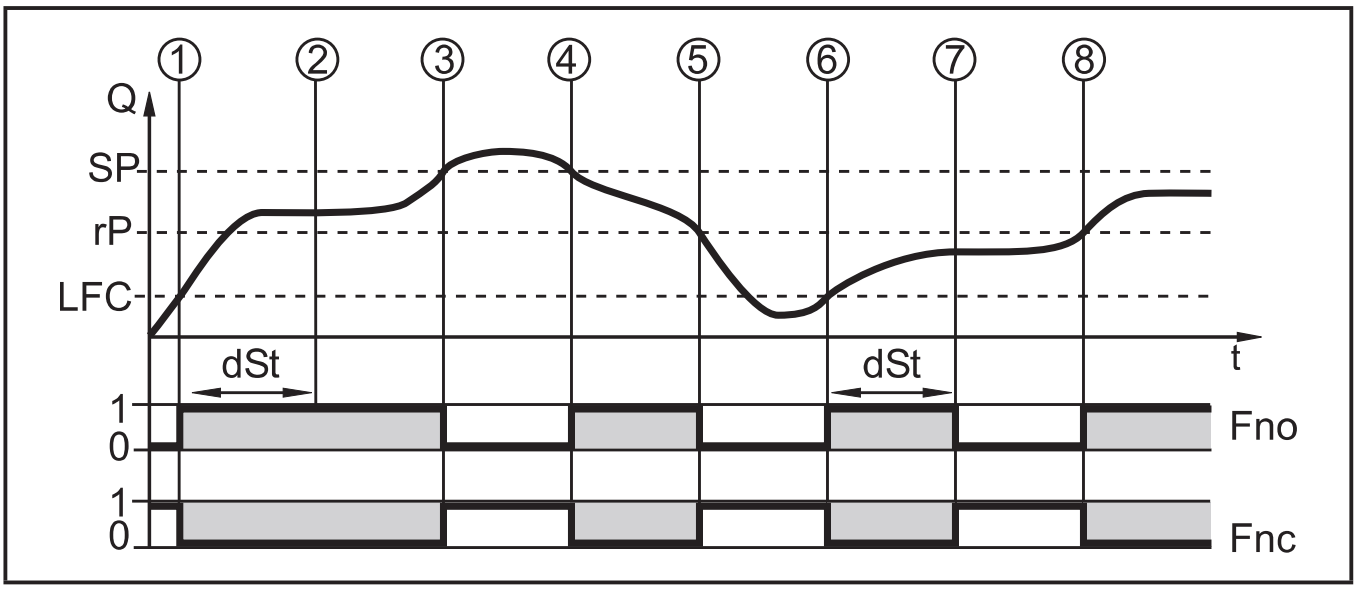

UK

	Condition	Reaction
1	Volumetric flow quantity Q reaches LFC	dST starts, output becomes active
2	dST elapsed, Q reached good range	Output remains active
3	Q above SP (leaves good range)	Output is reset
4	Q again below SP	Output becomes active again
5	Q below rP (leaves good range)	Output is reset again
6	Q reaches again LFC	dST starts, output becomes active
7	dST elapsed, Q has not reached good range	Output is reset
8	Q reaches good range	Output becomes active

4.8 Low flow cut-off (LFC)

With the function Low Flow cut-off small volumetric flow quantities can be suppressed (→ 10.5.7). Flows below the LFC value are evaluated by the sensor as standstill (Q = 0).

4.9 IO-Link

This unit has an IO-Link communication interface which enables direct access to process and diagnostic data. In addition it is possible to set the parameters of the unit during operation. Operation of the unit via IO-Link interface requires an IO-Link capable module (IO-Link master).

With a PC, suitable IO-Link software and an IO-Link adapter cable communication is possible when the system is not in operation.

For the IODDs necessary for the configuration of the unit, detailed information about process data structure, diagnostic information, parameter addresses and the necessary information about the required IO-Link hardware and software visit www.ifm.com.

5 Mounting

- ▶ Ensure that the system is free of pressure during installation.
- ▶ Ensure that no media can leak at the mounting location during installation.
- ▶ Attach the supplied warning label to the sensor cable.

The unit can be installed independently of the orientation if the following is ensured:

- No air bubbles can form in the pipe system.
- The pipes are always completely filled.

5.1 Recommended installation position

- ▶ Install the unit so that the measuring pipe is always completely filled.
- ▶ Arrange for inlet and outlet pipe lengths. Disturbances caused by bends, valves, reductions, etc. are compensated for. It applies in particular: no shut-off and control devices are allowed directly in front of the unit.

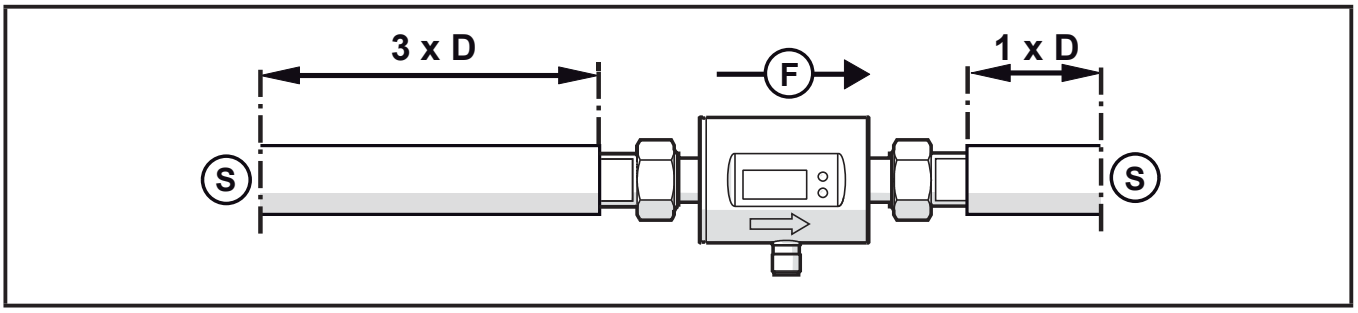

S = disturbance (e.g. shut-off / control device, pump, bends)
D = pipe diameter
F = direction of flow

▶ Install in front of or in a rising pipe.

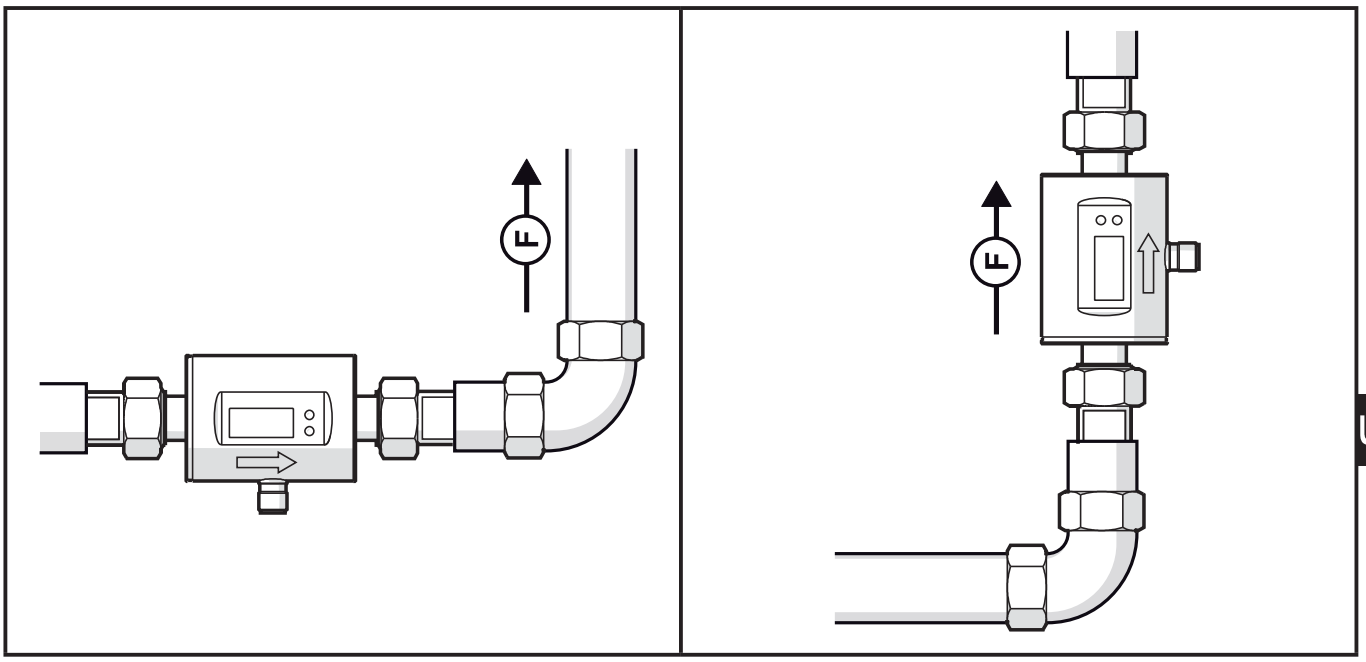

UK

5.2 Not recommended installation position

▶ Avoid the following installation positions:

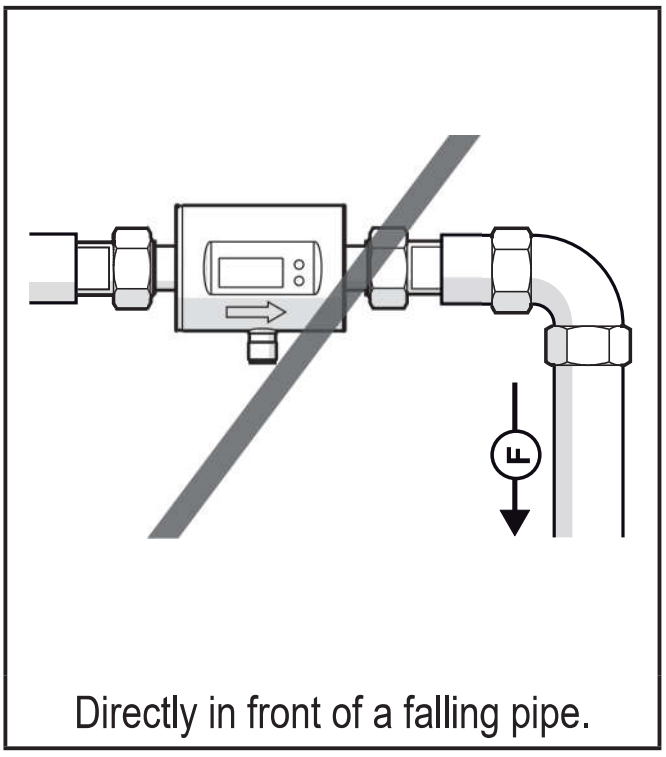

Directly in front of a falling pipe.

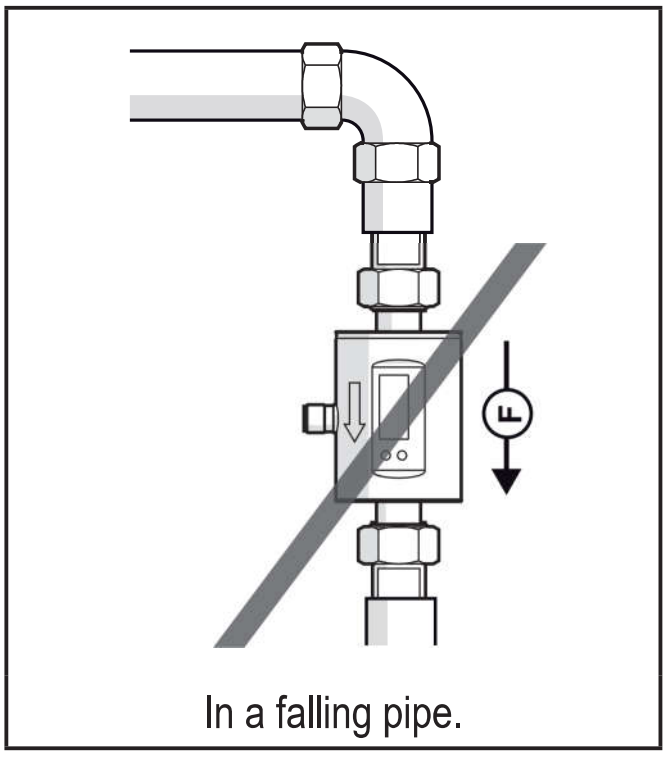

In a falling pipe.

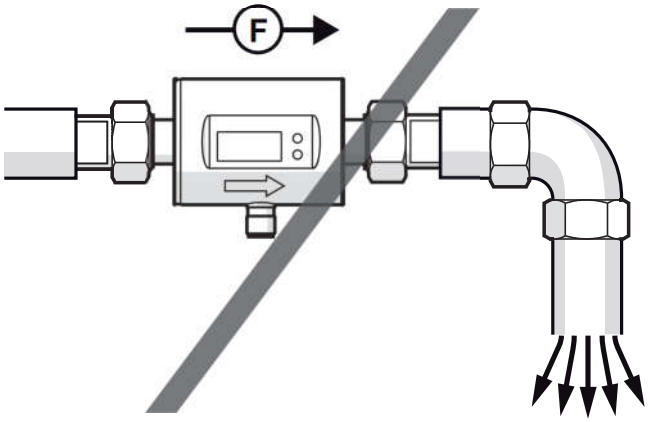

Directly in front of
the spout of the pipe.

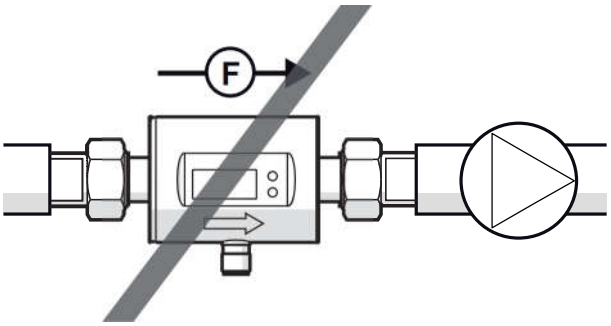

On the suction side of a pump.

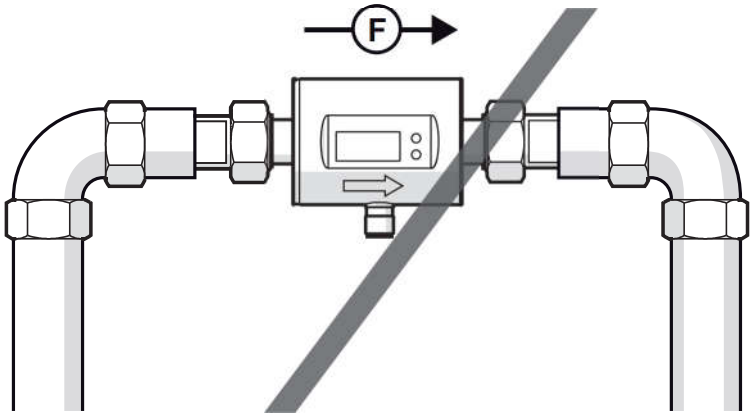

At the highest point
of the pipe system.

F = flow direction

5.3 Grounding

If installed in an ungrounded pipe system (e.g. plastic pipes), the unit must be grounded (functional earth).

Ground brackets for the M12 connector are available as accessories
→ www.ifm.com.

5.4 Installation in pipes

The units with a G thread can be installed in the pipes using adapters.

Information about the available mounting accessories at www.ifm.com.

A correct fit of the unit and ingress resistance of the connection are only ensured using ifm adapters.

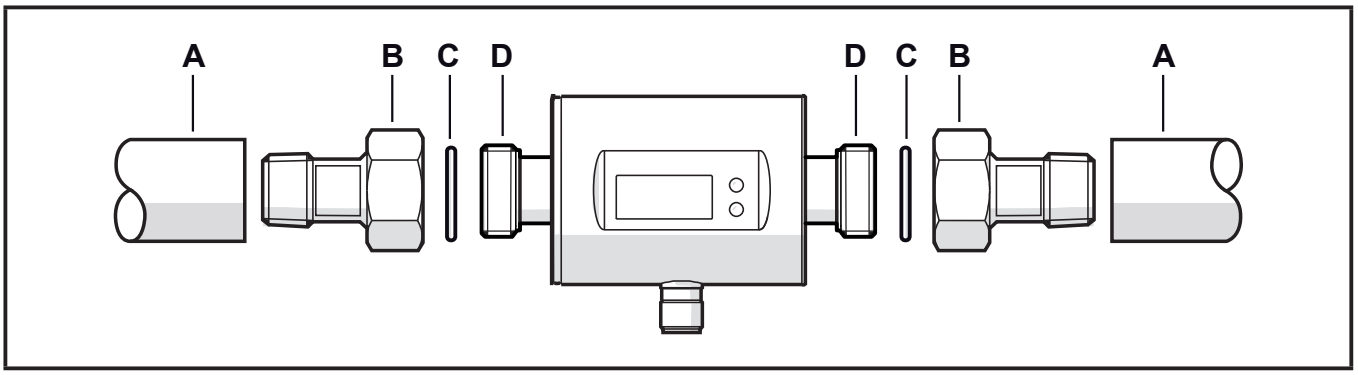

1. Grease the threads of the process connection, adapter and sensor. Use a lubricating paste which is suitable and approved for the application.
2. Screw the adapter (B) into the pipe (A).
3. Place the seals (C) and install the unit according to the marked flow direction.
4. Screw the adapter (B) with the threads (D) until it is hand-tight.
5. Tighten the two adapters in opposite direction:
   Tightening torque: SM6/SM7/SM8 = 30 Nm; SM4 = 15 Nm.

After installation air bubbles in the system can affect the measurement.

▶ Corrective measures: Rinse the system after installation for ventilation.

In case of horizontal installation:
As a result of design requirements a small quantity of the medium always remains in the measuring channel after switching off the pump.

6 Electrical connection

The unit must be connected by a qualified electrician.
The national and international regulations for the installation of electrical equipment must be adhered to.
Voltage supply according to EN 50178, SELV, PELV.

▶ Disconnect power.

▶ Connect the unit as follows:

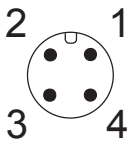

BK: black
BN: brown
BU: blue
WH: white

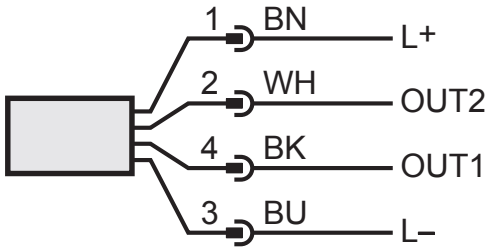

Colours to DIN EN 60947-5-2

Sample circuits:

2 x positive switching

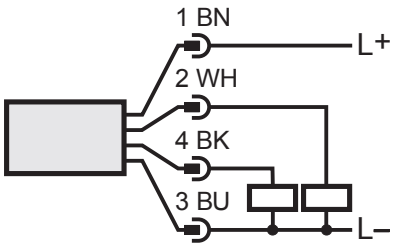

2 x negative switching

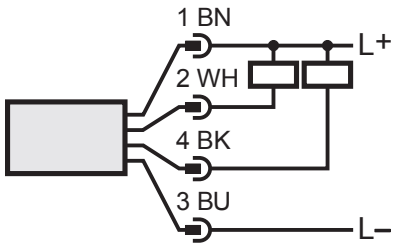

1 x positive switching / 1 x analogue

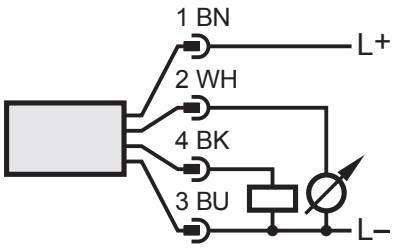

1 x negative switching / 1 x analogue

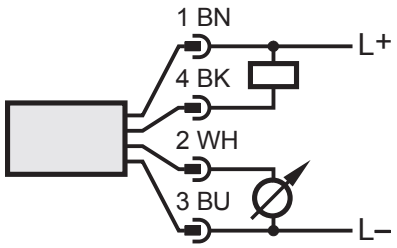

Pin 1	L+
Pin 3	L-
Pin 4 (OUT1)	• Switching signal: limits for volumetric flow • Pulse signal: 1 pulse every time the defined volumetric flow quantity is reached • Switching signal: quantity meter reached preset value • Switching signal for direction of flow • IO-Link
Pin 2 (OUT2/ InD)	• Switching signal: limits for volumetric flow • Switching signal: limits for temperature • Analogue signal for volumetric flow quantity • Analogue signal for temperature • Switching signal for direction of flow • Input for external counter reset signal (InD)

7 Operating and display elements

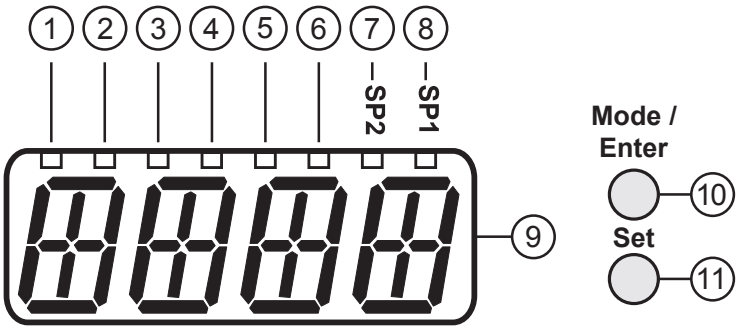

1-6: Indicator LEDs for process value indication

SMxx00: LED		Process value display		Unit SMxx00	Unit SM4x00
1	□	Current flow volume per minute		l/min	ml/min
2	□	Current flow volume per hour		m^3/h	l/h
3	□	Current consumed quantity (= meter reading) since the last reset	Totaliser *	l	l
4	□			m^3	m^3
4 + 6	□			$m^3 \times 10^3$	$m^3 \times 10^3$
3	⧈	Consumed quantity (= meter reading) before the last reset		l	l
4	⧈			m^3	m^3
4 + 6	⧈			$m^3 \times 10^3$	$m^3 \times 10^3$
5	□	Current medium temperature		°C	°C

SMxx01: LED		Process value display		Unit
1	□	Current flow volume per minute		gpm
2	□	Current flow volume per hour		gph
3	□	Current consumed quantity (= meter reading) since the last reset	Totaliser *	gal
3 + 5	□			gal x 10^3
3 + 6	□			gal x 10^6
3	⧈	Consumed quantity (= meter reading) before the last reset		gal
3 + 5	⧈			gal x 10^3
3 + 6	⧈			gal x 10^6
4	□	Current medium temperature		°F

□ LED is lit; ⧈ LED flashes

* The consumed quantity is automatically displayed in the unit of measurement providing the highest accuracy.

7-8: Indicator LEDs for switching output
LED 7: Switching status OUT2 (lights when output 2 is switched) LED 8: Switching status OUT1 (lights when output 1 is switched)
9: Alphanumeric display, 4 digits
• Current volumetric flow quantity with setting [SELd] = FLOW • Meter reading of the totaliser with setting [SELd] = TOTL • Current medium temperature with setting [SELd] = TEMP • Parameters and parameter values
10: [Mode/Enter] button
• Change from the RUN mode to the main menu • Select parameters • Acknowledge the set parameter value
11: [Set] button
• Change parameter values (hold button pressed) • Change of the display unit in the normal operating mode (RUN mode)

8 Menu

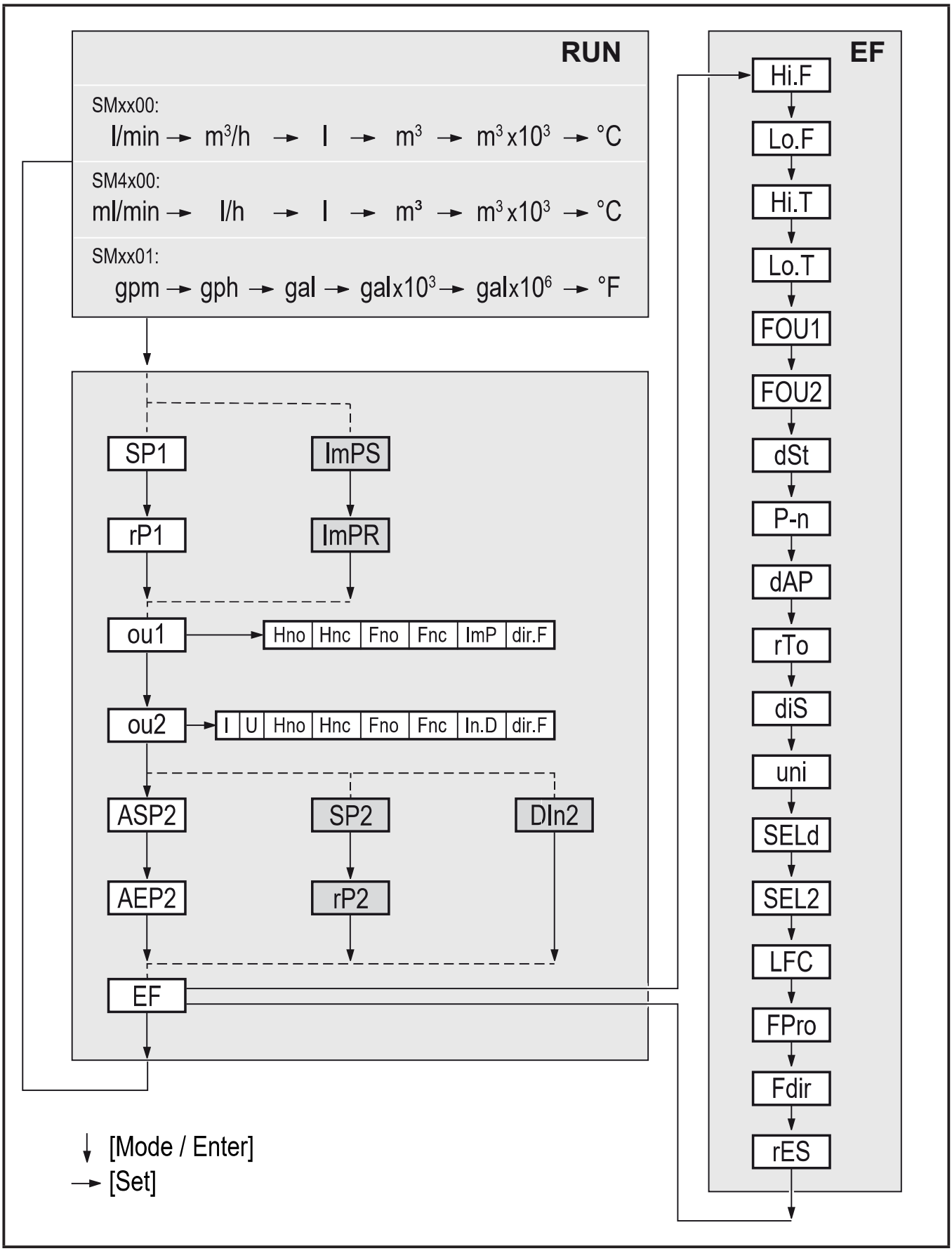

Parameters with white background are indicated in case of factory setting (→ 14). Parameters with grey background are indicated in case of changes of the preset for ou1 and ou2.

Parameters	Explanation and setting options (→ 4 Function)
SP1 / rP1	Maximum / minimum value for volumetric flow on OUT1.
ImPS	Pulse value = volumetric flow quantity at which 1 pulse is delivered.
ImPR	Configuration of the output for consumed quantity monitoring: YES (pulse signal), no (switching signal).
ou1	Output function for OUT1 (volumetric flow): - Hno, Hnc, Fno, Fnc: switching signal for the limits - ImP: consumed quantity monitoring (totaliser function) - dir.F: detection of direction
ou2	Output function for OUT2 (volumetric flow or temperature): - Hno, Hnc, Fno, Fnc: switching signal for the limits - I (current signal 4...20 mA), U (voltage signal 0...10 V) - dir.F: detection of direction Input function for OUT2: - In.D: input for external meter reset signal
ASP2 / AEP2	Analogue start point / analogue end point for volumetric flow or temperature on OUT2.
SP2 / rP2	Maximum / minimum value for volumetric flow or temperature on OUT2.
DIn2	Configuration of the input for external meter reset signal: HIGH, +EDG, LOW, -EDG (→ 10.3.7)
EF	Extended functions: opening of the lower menu level.
Hi.F / Hi.T	Maximum value memory for volumetric flow / temperature.
Lo.F / Lo.T	Minimum value memory for volumetric flow / temperature.
FOU1 / FOU2	Behaviour of OUT1 / OUT2 in case of an internal fault: OU, On, OFF (→ 10.5.6).
dST	Start-up delay in seconds.
P-n	Output logic: PnP, nPn.
dAP	Measured value damping: damping constant in seconds.
rTo	rES.T (meter reset: manual), h/d/w (time-controlled: hours/days/weeks), OFF.
diS	Update rate and orientation of the display: d1...d3, rd1...rd3, OFF (→ 10.5.2).
uni	Standard unit of measurement for volumetric flow
SELd	Standard measured variable of the display: FLOW (volumetric flow value), TEMP (medium temperature), TOTL (meter reading).
SEL2	Standard unit of measurement for evaluation by OUT2: FLOW (volumetric flow) or TEMP (temperature).

LFC	Low flow cut-off.
FPro	Counting method of the totaliser: –+ or 0+ (→ 10.5.8).
Fdir	Direction of flow: + or - (→ 10.5.9).
rES	Restoring the factory settings.

9 Set-up

After power on and expiry of the power-on delay time of approx. 5 s the unit is in the RUN mode (= normal operating mode). It carries out its measurement and evaluation functions and generates output signals according to the set parameters.

- During the power-on delay time the outputs are switched as programmed:
  - ON with normally open function (Hno / Fno)
  - OFF with normally closed function (Hnc / Fnc).
  - ON for detection of direction (dir.F)
- If output 2 is configured as analogue output, the output signal is at 20 mA (current output) or 10 V (voltage output).

10 Parameter setting

Parameters can be set before installation or during operation.

If you change parameters during operation, this will influence the function.

▶ Ensure that there will be no malfunctions in your plant.

During parameter setting the unit remains in the operating mode. It continues to monitor with the existing parameter until the parameter setting has been completed.

The parameters can also be set via the IO-Link interface (→ 4.9).

⚠ CAUTION

For medium temperatures above 50 °C (122 °F) some parts of the housing can heat up to over 65 °C (149 °F).

▶ Do not press the pushbuttons manually. Instead use another object (e.g. ballpoint pen).

10.1 Parameter setting in general

1. Change from the RUN mode to the main menu and selection of the requested parameter	[Mode/Enter]
2. Acknowledge the set parameter value	[Set]
3. Change the setting mode	[Set] > 5 s
4. Modification of the parameter value - incrementally by pressing once - continuously by keeping the button pressed To reduce the value: let the display move to the maximum setting value. Then the cycle starts again at the minimum setting value.	[Set]
5. Acknowledge the set parameter value	[Mode/Enter]
6. Return to the RUN mode	> 30 seconds (timeout) or [Mode/Enter] until the RUN mode is reached.

10.1.1 Change to the menu "Extended functions"

1. Change from the RUN mode to the main menu and selection of the parameter EF	[Mode/Enter]
2. Change to sub-menu EF	[Set]

10.1.2 Locking / Unlocking

The unit can be locked electronically to prevent unintentional settings. On delivery: not locked.

Locking	▶ Make sure that the unit is in the normal operating mode. ▶ Press [Mode/Enter] and [Set] simultaneously for 10 s until [Loc] is displayed.
Unlocking	▶ Make sure that the unit is in the normal operating mode. ▶ Press [Mode/Enter] and [Set] simultaneously for 10 s until [uLoc] is displayed.

10.1.3 Timeout

If no button is pressed for 30 s during parameter setting, the unit returns to the operating mode with unchanged values.

10.2 Settings for volumetric flow monitoring

10.2.1 Limit monitoring volumetric flow (OUT1)

- ▶ Select [ou1] and set the switching function: Hno, Hnc, Fno or Fnc.
- ▶ Select [SP1] and set the upper limit of the volumetric flow.
- ▶ Select [rP1] and set the lower limit of the volumetric flow.

10.2.2 Limit monitoring volumetric flow (OUT2)

- ▶ Select [SEL2] and set FLOW.
- ▶ Select [ou2] and set the switching function: Hno, Hnc, Fno or Fnc.
- ▶ Select [SP2] and set the upper limit of the volumetric flow.
- ▶ Select [rP2] and set the lower limit of the volumetric flow.

10.2.3 Analogue output flow rate (OUT2)

- ▶ Select [SEL2] and set FLOW.
- ▶ Select [ou2] and set the analogue function: I (4...20 mA) or U (0...10 V).
- ▶ Select [ASP2] and set the volumetric flow value at which the minimum current or voltage value is provided.
- ▶ Select [AEP2] and set the volumetric flow value at which the maximum current or voltage value is provided.

10.2.4 Detection of the direction of flow (OUT1 or OUT2)

- ▶ Select [ou1] or [ou2] and set dir.F.

10.3 Settings for consumed quantity monitoring

10.3.1 Quantity monitoring by pulse output (OUT1)

- ▶ Select [ou1] and set ImP.
- ▶ Select [ImPR] and set YES.
- ▶ Select [ImPS] and set the volumetric flow quantity at which 1 pulse is provided (→ 10.3.3).

10.3.2 Quantity monitoring by preset counter (OUT1)

- ▶ Select [ou1] and set ImP.
- ▶ Select [ImPR] and set no.
- ▶ Select [ImPS] and set the volumetric flow quantity at which output 1 switches (→ 10.3.3).

10.3.3 Pulse value

- ▶ Select [ou1] and set the consumed quantity monitoring: → 10.3.1 or → 10.3.2.
- ▶ Select [ImPS].
- ▶ Press [Set] briefly.
- > The currently set value is displayed.
- ▶ Keep [Set] pressed until "cccc" is displayed.
- ▶ Press [Set] to select the setting range.
- > With each press of the pushbutton the display changes to the next setting range (decimal point shifts and / or LED* changes).
- ▶ Press [Mode/Enter] to confirm the setting range.
- ▶ Press [Set] until the requested numerical value is displayed.
- ▶ Press [Mode/Enter] briefly.

* LED 1...6 → 7 Operating and display elements

10.3.4 Manual counter reset

- ▶ Select [rTo] and set rES.T.
- > The counter is reset to zero.

10.3.5 Time-controlled counter reset

- ▶ Select [rTo] and set the requested value (intervals of hours, days or weeks).
- > The counter is reset automatically with the value now set.

10.3.6 Deactivation of the counter reset

▶ Select [rTo] and set OFF.
> The meter is only reset after overflow (= factory setting).

10.3.7 Counter reset using an external signal

▶ Select [ou2] and set In.D.
▶ Select [DIn2] and set the counter reset signal:
HIGH = reset for high signal
LOW = reset for low signal
+EDG = reset for rising edge
-EDG = reset for falling edge

10.4 Settings for temperature monitoring

10.4.1 Limit monitoring temperature (OUT2)

▶ Select [SEL2] and set TEMP.
▶ Select [ou2] and set the switching function: Hno, Hnc, Fno or Fnc.
▶ Select [SP1] and set the upper temperature limit.
▶ Select [rP2] and set the lower temperature limit.

10.4.2 Analogue output temperature (OUT2)

▶ Select [SEL2] and set TEMP.
▶ Select [ou2] and set the analogue function: I (4...20 mA) or U (0...10 V).
▶ Select [ASP2] and set the temperature value at which the minimum current or voltage value is provided.
▶ Select [AEP2] and set the temperature value at which the maximum current or voltage value is provided.

10.5 User settings (optional)

10.5.1 Standard unit of measurement for volumetric flow

▶ Select [uni] and set the unit of measurement.

The setting only has an effect on the volumetric flow value. The consumed quantity (meter reading) is automatically displayed in the unit of measurement providing the highest accuracy.

10.5.2 Standard display

▶ Select [SELd] and define the standard unit of measurement
FLOW = display shows the current volumetric flow value in the standard unit of measurement.
TOTL = display shows the current meter reading in the unit providing the highest accuracy.
TEMP = the current medium temperature in °C / F° is displayed.
▶ Select [diS] and set the update rate and orientation of the display:
d1 = update of the measured values every 50 ms.
d2 = update of the measured values every 200 ms.
d3 = update of the measured values every 600 ms.
rd1, rd2, rd3 = display like d1, d2, d3; rotated by 180.
OFF = the display is switched off in the operating mode. The LEDs remain active even if the display is deactivated. Error messages are displayed even if the display is deactivated.

10.5.3 Output logic

▶ Select [P-n] and set PnP or nPn.

10.5.4 Start-up delay

▶ Select [dST] and set the numerical value in seconds.

10.5.5 Measured value damping

▶ Select [dAP] and set the damping constant in seconds (τ value 63 %).

10.5.6 Error behaviour of the outputs

▶ Select [FOU1] and set the value:
- On = Output 1 switches ON in case of a fault.
- OFF = Output 1 switches OFF in case of an error.
- OU = Output 1 switches irrespective of the fault as defined with the parameters.

▶ Select [FOU2] and set the value:

1. Switching output:
- On = Output 2 switches ON in case of a fault.
- OFF = Output 2 switches OFF in case of a fault.
- OU = Output 2 switches irrespective of the fault as defined with the parameters.

2. Analogue output:
- On = The analogue signal goes to the upper fault value (→ 4.5).
OFF = The analogue value goes to the lower fault value (→ 4.5).
OU = The analogue signal corresponds to the measured value.

10.5.7 Low flow cut-off

▶ Select [LFC] and set the limit.

10.5.8 Counting method of the totaliser

▶ Select [FPro] and set the value:
-+ = totalling the volumetric flow values with the correct sign.
0+ = totalling only positive volumetric flow values.

10.5.9 Direction of flow

▶ Select [Fdir] and set the direction of flow:
+ = flow in the direction of the flow arrow (= factory setting)
- = flow against the flow arrow ▶ label over the arrow

10.6 Service functions

10.6.1 Read min/max values

Read minimum or maximum measured values:
▶ Select Hi.x or Lo.x.
Hi.F = maximum volumetric flow, Lo.F = minimum volumetric flow
Hi.T = maximum temperature, Lo.T = minimum temperature

Delete memory:
▶ Select Hi.x or Lo.x.
▶ Press and hold [Set] until [----] is displayed.
▶ Briefly press [Mode/Enter].



It makes sense to delete the memories as soon as the unit operates under normal operating conditions for the first time.

10.6.2 Restoring the factory settings

▶ Select [rES].
▶ Press and hold [Set] until [----] is displayed.
▶ Briefly press [Mode/Enter].



→ 14 Factory setting. We recommend taking down your own settings in that table before carrying out a reset.

11 Operation

11.1 Reading the process value

The LEDs 1-6 signal which process value is currently displayed.
The process value to be displayed as standard (temperature, volumetric flow quantity or meter reading of the totaliser) can be preset → 10.5.2 Standard display.
A standard unit of measurement can be defined for the volumetric flow quantity → 10.5.1.

11.2 Changing the process value display in the RUN mode

▶ Briefly press [Set] in the RUN mode. Press the pushbutton to move to the next display unit.

> The unit displays the current measured value in the selected display unit for approx. 30 s, the corresponding indicator LED lights (→ 7).

11.3 Reading the set parameters

▶ Briefly press [Mode/Enter] to scroll through the parameters.

▶ Briefly press [Set] when the requested parameter is displayed.

> The unit displays the corresponding parameter value. After about 30 s it returns to the RUN mode.

12 Troubleshooting

The unit has many self-diagnostic options. It monitors itself automatically during operation.

Warnings and error states are displayed, even when the display is switched off. Error indications are also available via IO-Link.

Display	Type	Description	Fault correction
Err	Error	Unit faulty / malfunction	▶ Replace the unit.
No display	Error	• Supply voltage too low. • Setting [diS] = OFF	▶ Check the supply voltage. ▶ Change the setting [diS] → 10.5.2
Loc	Warning	Setting pushbuttons on the unit locked, parameter change rejected.	▶ Unlock the unit → 10.1.2
C.Loc	Warning	Setting buttons on the unit temporarily locked, parameter setting via IO-Link communication active.	▶ Finish parameter setting via IO-Link communication.
S.Loc	Warning	Setting buttons locked via parameter software, parameter change rejected.	▶ Unlock the unit via IO-Link interface using the parameter setting software.
UL	Warning	Below the display range. • Current value between -130 % ... -120 % MEW • Temperature value between -50...-40 °C or -58...-40 °F	▶ Check flow range / temperature range.
cr.UL	Error	Below the detection zone. • Flow value < -130 % MEW • Temperature value < - 50 °C or -58 °F	▶ Check flow range / temperature range.
OL	Warning	Display range exceeded. • Current value between 120 % ... 130 % MEW • Temperature value between 100...110 °C or 212...230 °F	▶ Check flow range / temperature range.
cr.OL	Error	Detection zone exceeded. • Flow value > 130 % MEW • Temperature value > 110 °C or 230 °F	▶ Check flow range / temperature range.

Display	Type	Description	Fault correction
PArA	Error	Parameter setting outside the valid range.	▶ Repeat parameter setting.
SC1	Warning	Switching status LED for OUT1 flashing: short circuit OUT1.	▶ Check switching output OUT1 for short-circuit or excessive current.
SC2	Warning	Switching status LED for OUT2 flashing: short circuit OUT2.	▶ Check switching output OUT2 for short-circuit or excessive current.
SC	Warning	Switching status LEDs for OUT1 and OUT2 flashing: short circuit in both outputs.	▶ Check switching outputs OUT1 and OUT2 for short-circuit or excessive current.

MEW = final value of the measuring range

13 Technical data

Technical data and scale drawing at www.ifm.com.

14 Factory setting

Parameter	Factory setting	User setting
SP1	20 %	
rP1	19.5 %	
ImPS	SM4x00: 0.001 l SMxx00: 0.01 l SMxx01: 0.01 gal	
ImPR	Yes	
OU1	Hno	
OU2	I	
SP2 (FLOW)	40 %	
rP2 (FLOW)	39.5 %	
SP2 (TEMP)	40 %	
rP2 (TEMP)	39.5 %	
ASP2 (FLOW)	0 %	
AEP2 (FLOW)	100 %	
ASP2 (TEMP)	0 %	
AEP2 (TEMP)	100 %	
Fdir	+	
FPro	0+	
LFC	SM4x00: 20 ml SMxx00 / SMxx01: MAW	
DIn2	+EDG	
FOU1	OFF	
FOU2	OFF	
dST	0	
P-n	PnP	

Parameter	Factory setting	User setting
dAP	0.6 s	
rTo	OFF	
diS	d3	
Uni	SM4x00: ml/min SMxx00: l/min SMxx01: gpm	
SELd	FLOW	
SEL2	FLOW	

MAW = Initial value of the measuring range

The percentage values refer to the final value of the measuring range.

Technical data, approvals, accessories and further information at www.ifm.com.

Section 3.5.3

UV System

UV PURE®

Call Us: 1-888-407-9997

Technical Data Sheet
Hallett™ 500W

www.uvpure.com

Wastewater Applications

Model	Hallett 500W
Validation protocol	Third Party (PENDING)

Operating Range

Flow (single unit)	Up to 40 US gpm (151 Lpm)
UV dose	Min. 30 mJ/cm^2
UV Transmittance [UVT] (water)	50 - 95% UVT
Hardness (water)	Maximum 855 mg/L (50 gpg)
Iron (water)	Maximum 3 mg/L (3 ppm)
Temperature (air and water)	34 - 104°F (1 - 40°C)
Water pressure	5 - 100 psig (34 - 690 kPa)
Relative humidity (air)	Maximum 70%

Features

Quartz sleeve cleaning	Built-in - automatic mechanical wiper
Wiper position switch	Built-in
Purge valve	Built-in
Cooling	Built-in - forced air
Flow restrictor	Optional - internal
Shut-off valve	Optional - automatic solenoid

Electrical/Instrumentation

Voltage	120 V AC, 50/60 Hz
Power consumption (nominal)	196 W
Certifications	UL 979
UV lamps	Dual LPHO - air mounted
Lamp life (typical)	9,000 hours
Lamp cycles (recommended)	Maximum 2 per 24 hours
Sensors	Dual UV - calibrated to NIST standards
Dry contacts	Built-in - 2 provided (warning and alarm)
Interface	Colour LCD resistive touchscreen display
Alarming	Indicator light and audible alarms
Remote start/stop	Built-in
Onboard diagnostics	Built-in
4-20mA Output & Modbus	Optional

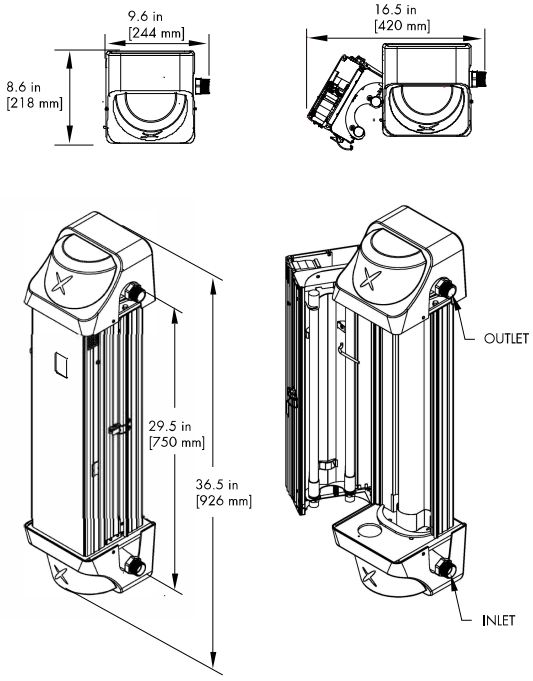

Physical

Dimensions (H x W x D)	36.5 x 9.6 x 8.6 in (926 x 244 x 218 mm)
Weight (dry)	32 lb (14.6 kg)
Weight (wet)	36 lb (16.3 kg)
Wetted parts	Meets NSF/ANSI/CAN 61 & NSF/ANSI 372 for water up to 73°F (23°C)
Body materials	Anodized aluminum and 316 Stainless Steel
Body configuration	Double door with side hinges
Inlet/outlet ports	1" MNPT Stainless Steel, optional - Stainless Steel hose
Ingress Protection rating	IP 51, optional - IP 66 for NEMA cabinet systems
Multiple units	Multiplex manifold and cabinets available
Warranty	5-year limited warranty for structural, hardware and mechanical components; 3-year limited warranty on electrical components and quartz sleeves; 12-month limited warranty on bulbs; and 1-year limited warranty on sensor probes

Contact a UV Pure representative to confirm product operating parameters for specific applications.

info@uvpure.com

v.20200914

UV Pure, UV Pure logo, Crossfire Technology, Crossfire Technology logo, and Hallett logo are registered trademarks in Canada and USA of UV Pure Technologies Inc. Hallett, Upstream, Cactus, and 'Safe water. always.' are trademarks of UV Pure Technologies Inc.

MADE IN CANADA

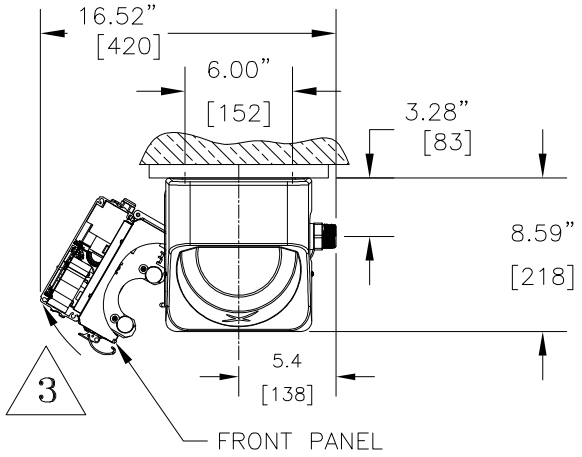

PRODUCT SPECIFICATIONS

MODEL:	**HALLETT 500PN**
OPERATING PRESSURE:	5–100 psig (34–690 kPa)
WATER TEMPERATURE:	34–104° F (1–40° C)
AIR TEMPERATURE:	34–104° F (1–40° C)
VOLTAGE:	120 Vac
POWER CONSUMPTION:	196 W (max.)
WEIGHT:	32.2 LBS (14.6kg)

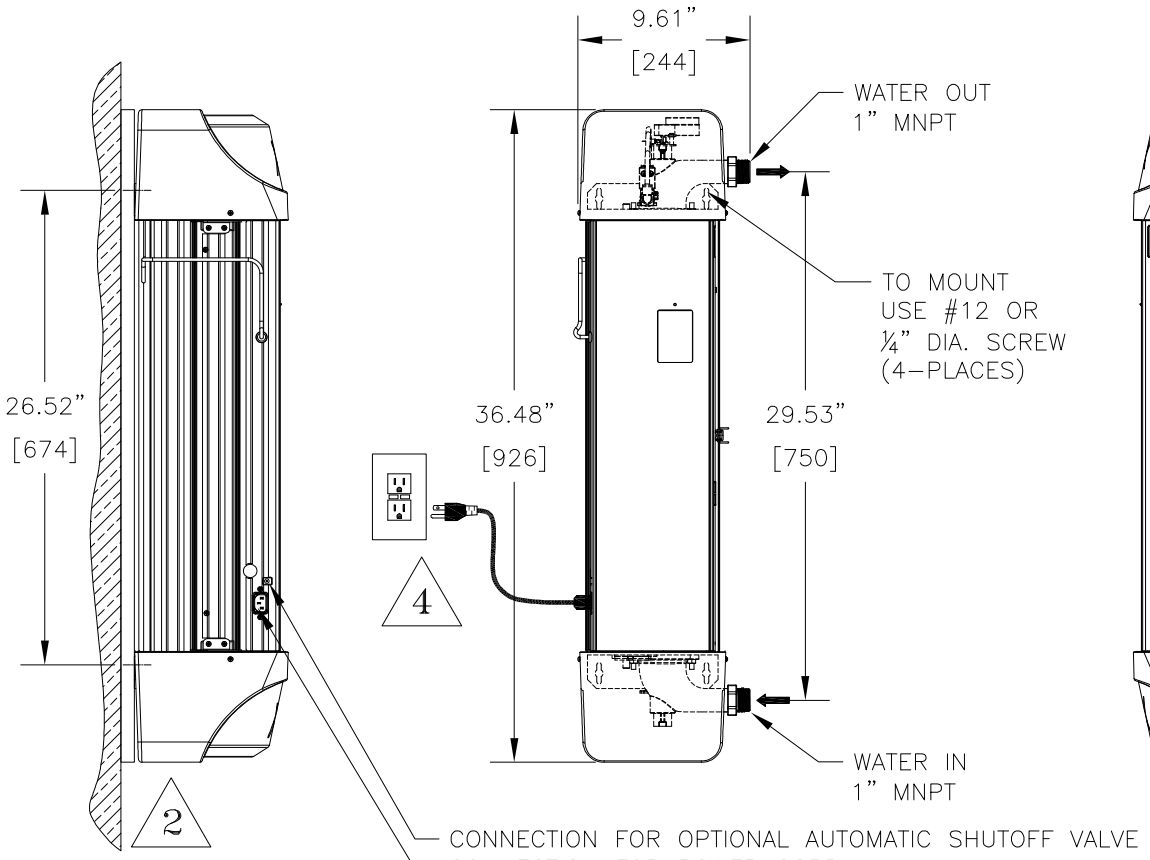

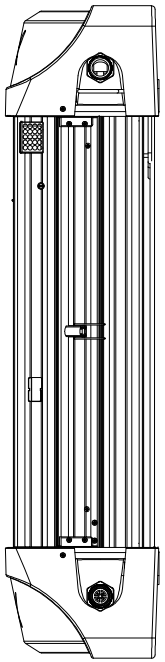

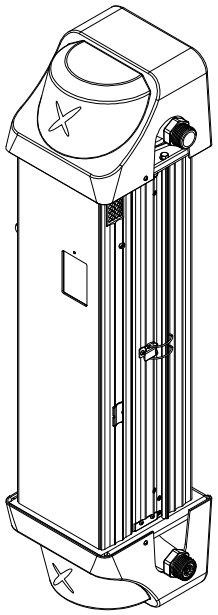

ISOMETRIC VIEW

THIS DRAWING, ITS SPECIFICATIONS AND DESIGNS, IS THE PROPERTY OF UV PURE TECHNOLOGIES INC. AND IS SUBJECT TO RETURN UPON REQUEST. IT IS SUBMITTED ON THE CONDITION THAT IT WILL NOT BE USED OR REPRODUCED IN ANY WAY WITHOUT UV PURE'S WRITTEN APPROVAL.

REVISIONS

REV	DESCRIPTION	DATE	APPV'D
A			
B			
C			
D			
E			

NOTES

1– ALL DIMENSIONS ARE IN INCHES, APPROX. EQUIV. IN METRIC [mm] INSIDE PARENTHESIS.

2– UNIT TO BE MOUNTED VERTICALLY ON A SOLID WALL.

3– FRONT PANEL SWINGS OPEN TO LEFT FOR UV LAMP REPLACEMENT.

4– UNIT TO BE PLUGGED IN GROUND–FAULT CIRCUIT–INTERRUPTER (GFCI).

FINISH

MATERIAL

DIMENSIONS IN INCHES (unless otherwise specified)

TOLERANCES (unless otherwise specified)

ANGULAR	±0°30'	DECIMAL 2 PLACES	±.010
FRACTIONAL	±1/32	DECIMAL 3 PLACES	±.005
DECIMAL 1 PLACE	±.015	DECIMAL 4 PLACES	±.0005

UV PURE TECHNOLOGIES INC.
455 MILNER AVE., UNIT 1
TORONTO, ONTARIO
M1B 2K4

	NAME	SIGN.	DATE
DRAFT.	S.P.		18 JUL 19
DESIGN.			
CHECK			
APPR.			

TITLE	HALLLETT 500PN LAYOUT DRAWING		
SHEET No.	SHEET 1 OF 1	SCALE	NONE
DWG. No.	GJ4	REV.	—

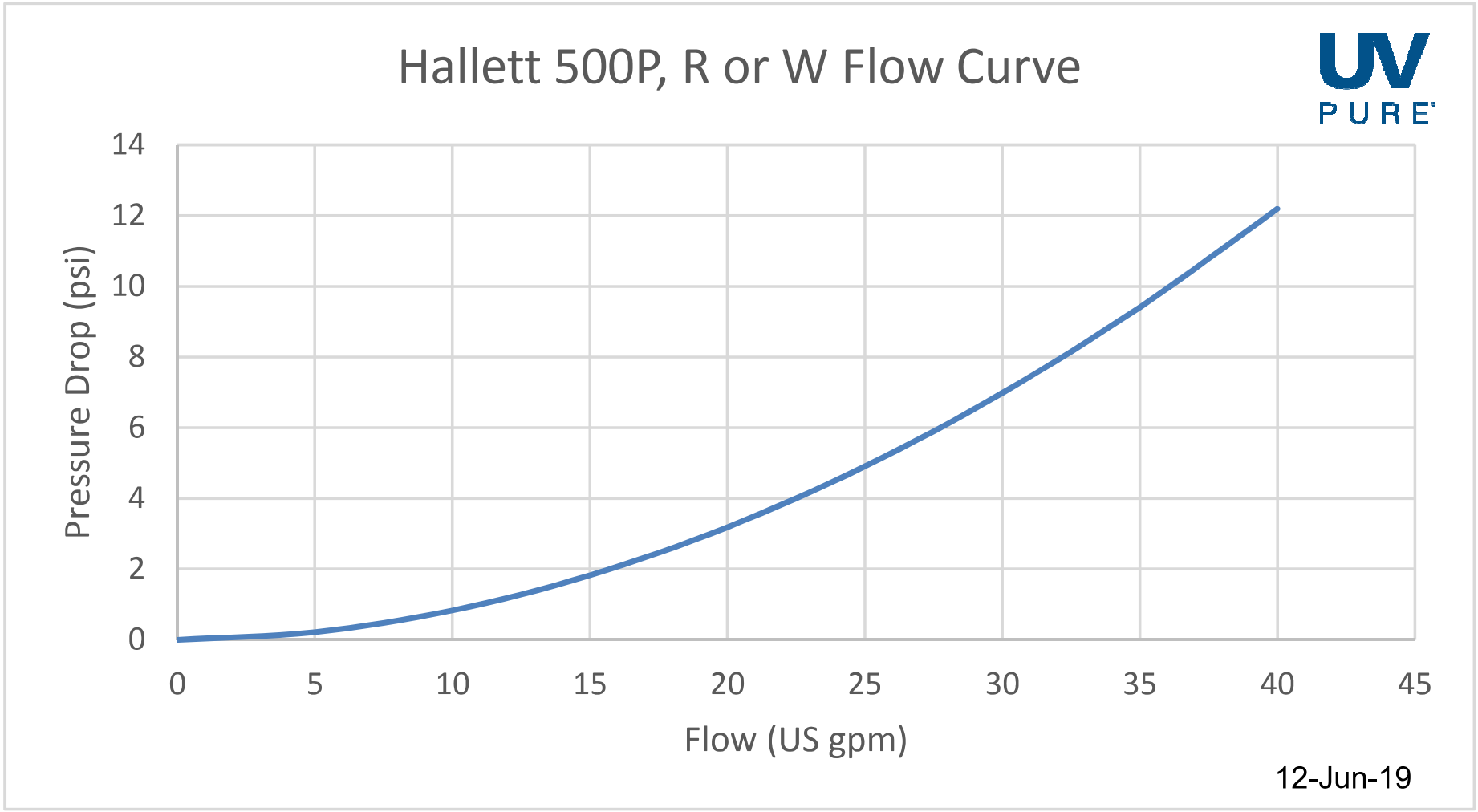
Hallett 500P, R or W Flow Curve
UV PURE
Pressure Drop (psi)
14
12
10
8
6
4
2
0
0
5
10
15
20
25
30
35
40
45
Flow (US gpm)
12-Jun-19

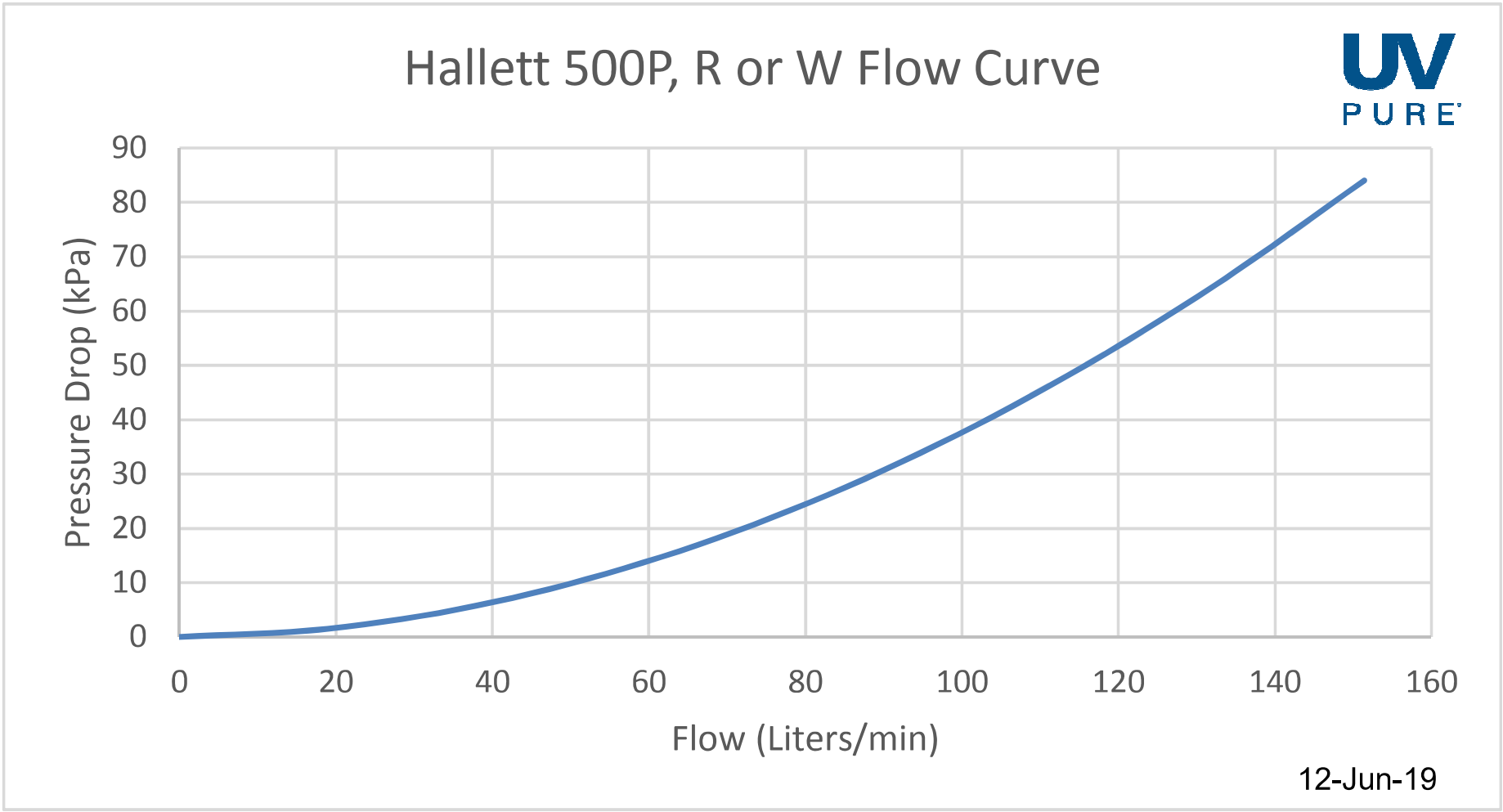
Hallett 500P, R or W Flow Curve
UV PURE
Pressure Drop (kPa)
90
80
70
60
50
40
30
20
10
0
0
20
40
60
80
100
120
140
160
Flow (Liters/min)
12-Jun-19

120Vac, 15A, 1PH, 60 Hz, SUPPLY (GROUND–FAULT CIRCUIT INTERRUPTER)
SEE TABLE FOR POWER DRAW

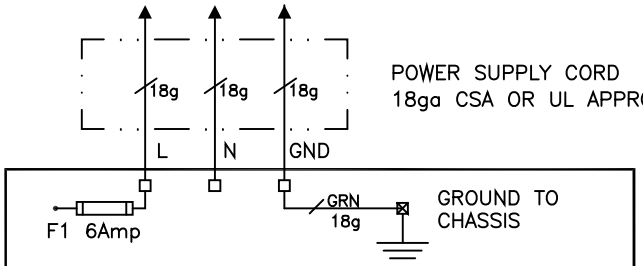

POWER SUPPLY CORD
18ga CSA OR UL APPROVED

MODEL	MAX POWER
HALLETT 1000XX	403W
HALLETT 750XX	222W
HALLETT 500XX	196W
HALLETT 400XX	162W

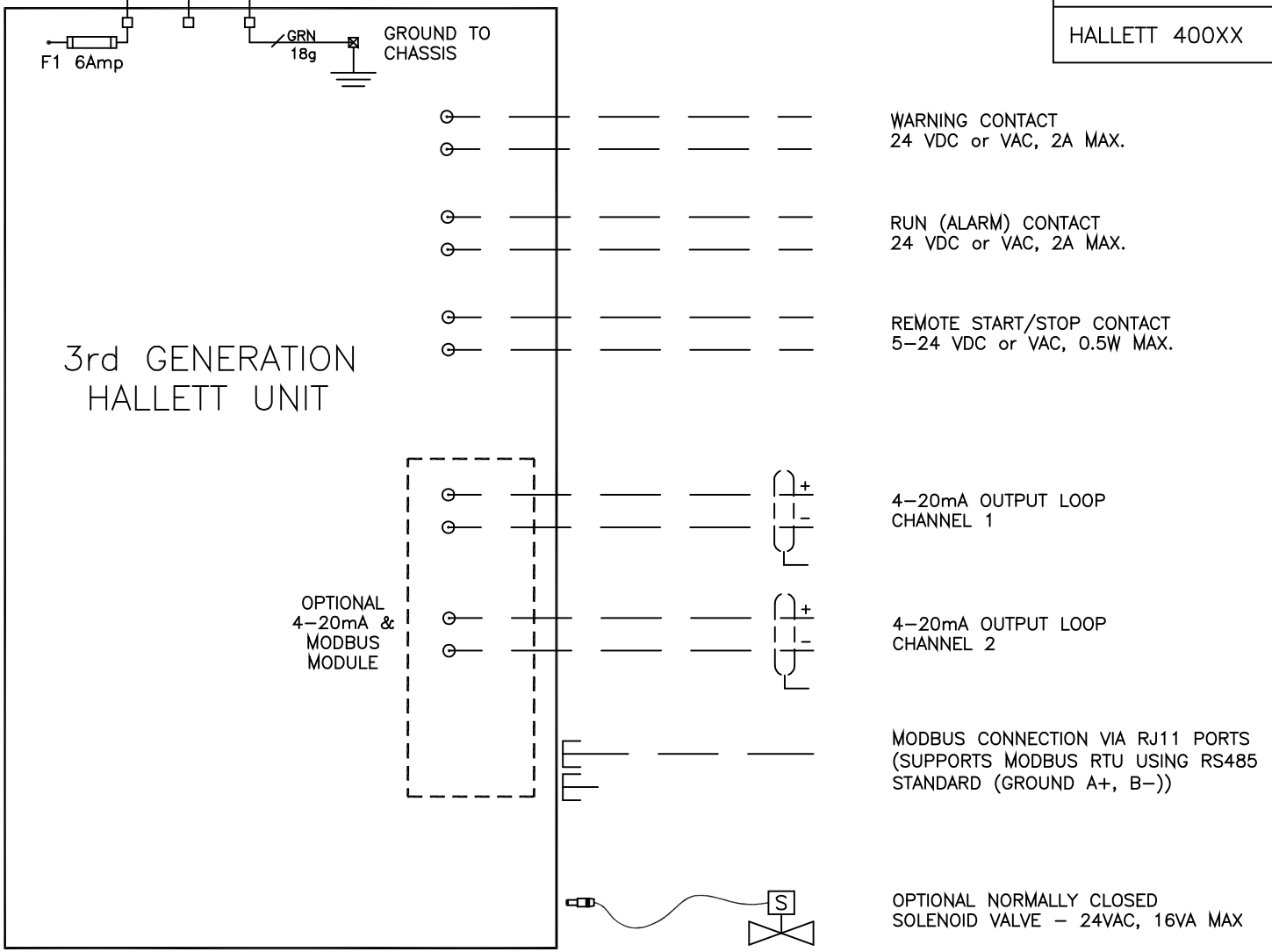

WARNING CONTACT
24 VDC or VAC, 2A MAX.

RUN (ALARM) CONTACT
24 VDC or VAC, 2A MAX.

REMOTE START/STOP CONTACT
5–24 VDC or VAC, 0.5W MAX.

4–20mA OUTPUT LOOP
CHANNEL 1

4–20mA OUTPUT LOOP
CHANNEL 2

MODBUS CONNECTION VIA RJ11 PORTS
(SUPPORTS MODBUS RTU USING RS485
STANDARD (GROUND A+, B–))

OPTIONAL NORMALLY CLOSED
SOLENOID VALVE – 24VAC, 16VA MAX

THIS DRAWING, ITS SPECIFICATIONS AND DESIGNS, IS THE PROPERTY OF UV PURE TECHNOLOGIES INC. AND IS SUBJECT TO RETURN UPON REQUEST. IT IS SUBMITTED ON THE CONDITION THAT IT WILL NOT BE USED OR REPRODUCED IN ANY WAY WITHOUT UV PURE'S WRITTEN APPROVAL.

REVISIONS

REV	DESCRIPTION	DATE	APPV'D
A	ECO 489 – S.P.	24 MAR 20	
B			
C			
D			
E			

NOTES

1. FUSE F1 IS 6A 250VAC 3AG OR EQUIVALENT

2– EXTERNAL WIRING TO ENTER THROUGH PROVIDED HOLE IN SIDE WALL. STRAIN RELIEF KIT GD21 AVAILABLE.

3–UNLESS SPECIFIED, EXTERNAL WIRING CONNECTED TO SPRING CAGE TERMINALS, 20–16 AWG.

4–WIRING FOR ANALOG LOOPS SHOULD BE SHIELDED. EACH LOOP REQUIRES SEPARATE POWER SUPPLY OR ISOLATION. SEE DOCUMENT GH27.

5–FOR MODBUS INFORMATION SEE DOCUMENT GH57.

6–OPTIONAL SHUTOFF VALVE CONNECTED VIA BARREL CONNECTOR.

FINISH

MATERIAL

DIMENSIONS IN INCHES (unless otherwise specified)

TOLERANCES (unless otherwise specified)

ANGULAR	±0°30'	DECIMAL 2 PLACES ±.010
FRACTIONAL	±1/32	DECIMAL 3 PLACES ±.005
DECIMAL 1 PLACE	±.015	DECIMAL 4 PLACES ±.0005

UV PURE TECHNOLOGIES INC.
455 MILNER AVE., UNIT 1
TORONTO, ONTARIO
M1B 2K4

	NAME	SIGN.	DATE
DRAFT.	S.P.		18 OCT 19
DESIGN.			
CHECK			
APPR.			

TITLE: ELECTRICAL SCHEMATIC
GEN3 HALLETT UNITS

SHEET No.: SHEET 1 OF 1
SCALE: NONE
DWG. No.: GA38
REV.: A

UV Pure Technologies Inc.

ULTRAVIOLET WATER DISINFECTION SYSTEM

ORIGINAL INSTRUCTIONS

MODEL:
SERIAL #:
Installation Date:

Hallett 500PN & 750PN are NSF/ANSI 55 CLASS A CERTIFIED by NSF

NSF/ANSI 61 Section 8 for material safety only and NSF/ANSI 372. Not certified by WQA for contaminant reductions or structural integrity.

LR1382

IEC 60335

†

††

SAVE THESE INSTRUCTIONS

Copyright UV Pure Technologies Inc. 2021
All rights reserved. No part of this document may be photocopied, reproduced, transmitted, or translated to another language without the prior written consent of UV Pure Technologies Inc.

UV Pure®, Hallett®, and Crossfire Technology® are registered trademarks of UV Pure Technologies Inc.

Publication Number: GH44H
June 2021

† 120V versions of the product are certified by QPS
†† 230V versions of the product meet IEC 60335.1, IEC 60335-2-109 (National Differences: EU Group Differences, AU, NZ, SG) and are CE.

NOTICE

THANK YOU

By purchasing a UV system with Crossfire Technology, you can now be certain that your application is receiving world-class treatment.

UV Pure units are designed to outperform conventional systems by delivering highly effective UV dosage rates for the inactivation of pathogens, including:

- viruses
- bacteria
- cryptosporidium
- giardia
- legionella
- E. coli
- Total coliforms

UV Pure products conform to the applicable provisions of the Code of Federal Regulations (CFR) requirements including, Title 21, Chapter 1,Subchapter J, Radiological Health.

1. IMPORTANT INSTRUCTIONS AND SAFETY INFORMATION

When operating the Hallett unit, basic precautions should always be followed to reduce the risk of fire, electric shock, and injury to persons, including the following:

1. Read all the instructions before installing or operating the system.
2. Pay attention to all warning and caution statements, and also safety symbols throughout these instructions. Failure to do so may result in personal injury and/or damage to equipment.
3. This unit is not intended for use by persons (including children) with reduced physical, sensory or mental capabilities, or lack of experience and knowledge, unless they have been given supervision or instruction concerning use of the unit by a person responsible for their safety.
4. Do not contact moving parts.
5. Only use attachments or spare parts recommended or sold by UV Pure.
6. The unit is intended only for indoor use in a dry location.
7. Do not unplug the unit by pulling on cord. To unplug, grasp the plug, not the cord.
8. Unplug the unit from the outlet when not in use and before any servicing or cleaning.
9. The UV chamber contains an interlock to disable the UV lamps if the event the chamber is accessed when the power is on. Do not defeat its purpose or attempt to service without opening the panel completely.
10. Do not operate the unit with a damaged cord or plug, or after a significant malfunction or is dropped or damaged in any manner. Return the unit to the nearest authorized service facility for examination, repair, or electrical or mechanical adjustment. If the supply cord is damaged, it must be replaced by a special cord available from UV Pure.
11. Connect the unit only to a circuit that is protected by a ground-fault circuit-interrupter (GFCI). See Grounding Instructions.
12. If an extension cord is necessary, the cord should contain a ground and be rated for the same amperage as the unit or combined units.
13. Do not plug in the unit if water is present on the unit or if any nearby piping connections are leaking.
14. Service to the unit does not require the removal of the aluminum endplates and they must remain assembled.
15. In the event of an alarm or shut down of the UV unit and water continues to flow either accidentally or for emergency purposes, or if the UV system is bypassed, it is recommended that any water used for drinking be boiled.
16. Do not operate the unit dry.
17. Do not operate this unit at altitudes over 3000m.
18. If the unit is installed in a room storing chemicals or is exposed to unnatural substances such as hydrogen sulphide, the room must be ventilated.

Grounding Instructions

This UV unit must be grounded. In the event of a malfunction or breakdown, grounding will reduce the risk of electric shock by providing a path of least resistance for electric current. This unit is equipped with a cord having an appliance-grounding conductor and a grounding plug. The plug must be plugged into an appropriate outlet that is installed and grounded in accordance with all local codes and ordinances. The piping connected to the UV unit must also be properly grounded. Install a grounding lug or strap as required.

WARNING - Improper connection of the equipment-grounding conductor can result in a risk of electric shock. Check with a qualified electrician or service representative if you are in doubt whether the unit is properly grounded. Do not modify the plug provided with this unit; if it will not fit the outlet, have a proper outlet installed by a qualified technician.

WARNING: If connection is made to a potable water system, the system shall be protected against backflow.

Ground-Fault Circuit-Interrupter

To comply with National Electrical Code, NFPA 70, the circuit where the UV unit(s) is connected must be protected by a ground-fault circuit-interrupter (GFCI). UV Pure recommends the use of Hubbell GFCIs for 120Vac.

Safety Symbols



WARNING: **Potential Shock Hazard**
Shutdown and unplug the unit before servicing.



DANGER: Ultraviolet Radiation
Disconnect power before replacing lamps. The lamps in the unit emit ultraviolet (UV) light that can cause permanent damage to the skin & eyes. **Never look at the lamp when it is operating.** Do not plug the unit in unless it is properly installed and all the panels are closed and secured. Do not open a panel or perform any service unless the unit has been unplugged. Never look into the unit or place any exposed skin into the illuminated areas when it is operating. Do not operate a unit that has been damaged or missing any components or safety devices. If a part is missing from your unit, contact your dealer**.**



CAUTION: **Safety Alert**
Pay attention to warning or caution statements in the instructions.



CAUTION: **UV Lamps Contain Mercury**
The UV lamps are fragile and must be handled with care. If lamp breakage occurs, avoid inhalation or ingestion of debris and avoid exposure to skin and eyes. Do not use a vacuum cleaner or broom for

cleanup. Follow local guidelines and regulations to remove and dispose of old UV lamps or mercury debris.





CAUTION: **Wear appropriate safety equipment**
Wear safety glasses when performing maintenance on the unit.
For non-potable applications, do not handle wetted parts with bare hands - use latex or vinyl gloves or equivalent.



CAUTION: **Quartz sleeves are fragile**
The quartz sleeve can break or chip if mishandled. Always handle it with care and keep it in a safe place if it is removed from the unit. Do not strike the quartz sleeve with any tool, since even the smallest chip can cause it to break under pressure.

1. Important Instructions and Safety Information 3
Grounding Instructions 4
Ground-Fault Circuit-Interrupter 4
Safety Symbols 4
2. About the Hallett 7
3. Product Specifications 9
4. Installation Instructions 13
Before Beginning Installation 13
Water Conditions - Pre-treatment Parameters 13
Parts Included 13
Other Materials Needed 14
Tools Needed 15
Location 15
Time Required 15
Assembling the Unit 16
Connecting the Pipes 16
Parallel Installation 18
Control Interfaces 19
External Contacts 19
Remote Start/Stop 19
4-20mA & Modbus Option 19
Data Logging on USB Option 20
5. Operating Instructions 20
Unit Functions 21
Navigating the Menus 22
Starting the Unit 25
Plugging in the Hallett for the first time 25
Flushing Instructions 26
Shutting Down of Unit and Seasonal Use 26
Disinfecting the Plumbing 26
Automatic Quartz Sleeve Cleaning Device (available on most models) 27
Built in Purge Valve (available on most models) 28
6. Troubleshooting 28
7. Maintenance 30
Accessing the UV Chamber 30
Replacing and Cleaning UV Lamps 31
Draining the Unit 35
Cleaning the Unit 35
Determining the Need for Cleaning 35
In-place cleaning 36
Disassembling the Unit 37
Cleaning/Removing the Quartz Sleeve 39
Reassembling the Unit 40
Hallett Spare Parts List 44
8. Service Record Sheet 45
9. UV Pure Technologies Limited Warranty 46
10. NSF Statement 50

2. ABOUT THE HALLETT

The Hallett system, manufactured by UV Pure Technologies, is the world's only ultraviolet water disinfection device with patented Crossfire Technology.

> Patented in US 6,707,048, Canada 2,463,503, Australia 2,002,333,084, Mexico 248805
> Patent Pending in Japan, UK, Europe, & Eurasia

UV Pure's UV systems employ revolutionary Crossfire Technology that is self-cleaning, self-monitoring, and fail-safe. The Hallett system with Crossfire Technology is designed to eliminate the potential risks associated with conventional single lamp UV systems.

Committed to exceeding UV disinfection standards, UV Pure has turned conventional technology inside-out by flowing the water inside the quartz sleeve and including two lamps mounted in air, dual or quad smart sensors, software-designed reflectors and an optional fail-safe solenoid valve.

Crossfire Technology is complete UV disinfection: Crossfire Technology incorporates *two* proprietary high-output UV lamps, with software-designed reflectors, that target pathogens with radiation from 360º, to deactivate pathogens and provide microbiologically safe drinking water or in the case of waste or reuse water, reduces pathogen counts below required discharge limits. Amalgam UV lamp technology has been introduced into the largest units to not only provide higher UV output, but also increased stability over a wider range of operating temperatures. In addition, the amalgam lamps can be cycled more often than conventional low pressure high output (LPHO) UV lamps – See Product Specifications Tables.

Crossfire Technology is capable of treating low UVT water: The Ultraviolet Transmittance (UVT) of water impacts the amount of treatment since UV light is absorbed rather than being available for disinfection. With a shorter path length for the UV light to travel, Crossfire Technology outperforms conventional UV systems and can treat potable applications as low as 50% UVT and also reuse and waste water in low UVT applications.

Crossfire Technology is engineered to be risk-free and fail-safe: Crossfire Technology uses dual or quad smart UV sensors mounted in air, which are designed to not foul and are more reliable indicators of system performance than ordinary systems. The lamps are fan-cooled and maintain consistent levels of UV output for maximum pathogen deactivation. Computerized alarms and an optional auto shutoff fail-safe valve are designed so that only treated water will pass through the unit.

Crossfire Technology is self-cleaning: Crossfire Technology uses a stainless steel wiper to clean the inside of the quartz sleeve eliminating fouling and the need for a water softener making abrasive quartz sleeve cleaning a thing of the past – saving money and the environment. The wiper is automated to cycle for 5 minutes every 4 hours. The cycle begins 5

minutes after power is applied. Self-cleaning not available on the NC models.

Crossfire Technology is virtually maintenance-free: Crossfire technology utilizes two lamps mounted in air, outside the quartz sleeve so maintaining a UV Pure unit is as easy as changing a light bulb with no system draining required. The UV lamps require replacement after 12 or 16 months of operation depending on the lamp type and notification of lamp replacement is given via a warning one month in advance.

Crossfire Technology is easy to install: The units are provided with either 1” or 2” male NPT connections. Optional stainless steel flexible hoses with Female Iron Pipe (FIP) connections are available for purchase for quick and simple installation.

The Hallett has a smart display: The operator interface is a colour touchscreen designed to allow unprecedented access to information such as lamp lifetime, real-time message history and UV dose display. A real-time clock is now available for improved troubleshooting and fault resolution.

The Hallett has a built-in purge valve: The purge valve eliminates the need to shut down the unit in the event of no water flow for hours, or even days (as long as a pressurized water supply is present). It is designed to prevent buildup of metals and minerals on internal components. The purge valve also eliminates nuisance alarms from changing water transmittance conditions. The purge valve is not available on some models.

The Hallett has remote status indication: The units come standard with warning and run contacts to remotely signal a control panel. In addition, the units can be started & stopped via external device.

The Hallett has a built-in surge protection: The power distribution circuit board contains filters and surge protection devices to increase the reliability of the on-board electronics and ballasts for the UV lamp.

The Hallett offers new interfaces: The Hallett units are available with a pair of 4-20mA outputs for UV Intensity, Net UV Transmittance, or UV Dose through an optional add-on device. Modbus, a smart electronic communication protocol, will also be available when the 4-20mA option is purchased.

The Hallett offers data logging: The Hallett units are available with an optional USB drive to continuously record performance on a daily basis.

3. PRODUCT SPECIFICATIONS

Specifications & Features common to all units

Operating Pressure[1]	5-100 psig (34-690 kPa)
Water Temperature Range (Hallett 1000XX)[2]	34-95° F (1-35° C) [5]
Water Temperature Range (Hallett 400-750XX)[2]	34-104° F (1-40° C) [5]
Air Temperature Range[2]	34-104° F (1-40° C)
Maximum Relative Humidity[3]	70%
Voltage Input	120Vac 50/60Hz for North America. 230 or 240 Vac 50/60Hz for International. **See power input label on left side of unit near power cord.**
Manifold materials	316 Stainless Steel
External Contact	2 available - Standard
Remote Start/Stop	Standard
Data Logging to USB Drive	Optional on all units
Automatic Solenoid Shutoff Valve	Optional on all units
Wetted Parts[4]	Meets NSF/ANSI/CAN 61 & NSF/ANSI 372

[1] Purging requires pressure to work properly. The optional shutoff valve requires min. 10psig to operate.
[2] In extreme conditions, high air temperatures may require lower water temperatures for proper operation and vice versa.
[3] For continuous flow potable applications, it is recommended to dehumidify the room where the UV unit is located.
[4] The Hallett 400NC does not meet NSF/ANSI/CAN 61 or 372
[5] Certified by WQA to 73° F or 23° C

Flow restrictors are devices that limit the water flow through the UV unit despite the demand or the amount of supply pressure. A flow restrictor is mandatory for an NSF/ANSI 55 Class A system but optional for other units.



Warning: Removal of this device may allow the water flow to exceed the validated performance of the system which therefore may not provide the necessary UV dose to inactivate all pathogens.

Potable Water

Hallett Models	Hallett 1000P	Hallett 750PN	Hallett 750P	Hallett 500PN	Hallett 500P
Max. Flow Rate[1]	100 gpm 378 L/min 22.7 m^3/hr	27.4 gpm 104 L/min 6.2 m^3/hr	30 gpm 114 L/min 6.8 m^3/hr	16.5 gpm 62 L/min 3.8 m^3/hr	23 gpm 87 L/min 5.2 m^3/hr
Performance Certifications[2]	USEPA UVDGM 2006	NSF/ANSI 55 Class A	3rd Party	NSF/ANSI 55 Class A	3rd Party
Min. UVT[3]	95%	75%	50-75%	75%	50-75%
Flow Restrictor	Optional	Yes	Optional	Yes	Optional
Pressure Drop	4.4 psig (30 kPa)	22.7 psig[4] (156 kPa)	7.4 psig (51 kPa)	22.7 psig[4] (156 kPa)	4.2 psig (29 kPa)
Lamp Type	Amalgam	LPHO	LPHO	LPHO	LPHO
Lamp Life[5]	16 months	12 months	12 months	12 months	12 months
Cycles/day[6]	6-12	2 (I.S.) 6-12 (P.H.)	2 (I.S.) 6-12 (P.H.)	2 (I.S.) 6-12 (P.H.)	2 (I.S.) 6-12 (P.H.)
UV Sensor	Quad	Dual	Dual	Dual	Dual
Built-in Purge Valve	Standard	Standard	Standard	Standard	Standard
Automatic Quartz Sleeve Cleaning Device	Standard	Standard	Standard	Standard	Standard
Wiper Position Switch	Standard	Standard	Standard	Standard	Standard
Lamp Heaters	No	Standard	Standard	Standard	Standard
4-20mA Output	Optional	Optional	Optional	Optional	Optional
Modbus connectivity	Optional	Optional	Optional	Optional	Optional
Power Draw	403W	222W	222W	196W	196W
Inlet & Outlet Port size	2" MNPT	1" MNPT	1" MNPT	1" MNPT	1" MNPT
Nominal Dimensions (H x W x D)	56x11x9" (142x29x 22cm)	40x10x9" (103x24x 22cm)	40x10x9" (103x24x 22cm)	36x10x9" (93x24x 22cm)	36x10x9" (93x24x 22cm)

1 Based on UV Dose of 40mJ/cm^2 at alarm setpoint.
2 NSF/ANSI 55 Class A certifications substantiated by NSF International only. Third party validations are pending.
3 The Hallett 1000P can operate over a wide range of UVTs with the UV dose EPA validated between 16-200mJ/cm^2. Consult UV Pure to correctly configure the unit. The Hallett 750P and 500P can be configured to high or low UVT applications by service technicians.
4 The flow restrictor adds significant pressure drop so the value presented is at 75% of maximum flow capacity.
5 Amalgam lamp lifetime is 12,000hrs/500 days and LPHO lifetime is 9000hrs/375 days
6 Instant Start (I.S.) LPHO limited to 2 cycles/day; Preheat (P.H.) models have 6-12 cycles/day. Exceeding the recommended daily cycles will accelerate the age of the UV lamps. LPHO lamps perform more reliably when operated 24/7.

Reuse and Waste Water

Hallett Models	Hallett 1000X[1]	Hallett 750W	Hallett 750R	Hallett 500W	Hallett 500R
Default Flow Rate[2]	70 gpm 265 L/min 15.9 m^3/hr	18 gpm 68 L/min 4.1 m^3/hr	13 gpm 49 L/min 3 m^3/hr	14 gpm 53 L/min 3.2 m^3/hr	10 gpm 38 L/min 2.3 m^3/hr
Performance Certifications[3]	NWRI / EPA	3rd Party	3rd Party	3rd Party	3rd Party
Min. UVT[2]	77%	50%	50%	50%	50%
Flow Restrictor	Optional	Optional	Optional	Optional	Optional
Pressure Drop[4]	2.6 psig (18 kPa)	2.8 psig (19 kPa)	1.4 psig (10 kPa)	1.6 psig (11 kPa)	0.8 psig (6 kPa)
Lamp Type	Amalgam	LPHO	LPHO	LPHO	LPHO
Lamp Life[5]	16 months	12 months	12 months	12 months	12 months
Cycles/day[6]	6-12	2 (I.S.) 6-12 (P.H.)	2 (I.S.) 6-12 (P.H.)	2 (I.S.) 6-12 (P.H.)	2 (I.S.) 6-12 (P.H.)
UV Sensor	Quad	Dual	Dual	Dual	Dual
Built-in Purge Valve	Standard	Standard	Standard	Standard	Standard
Automatic Quartz Sleeve Cleaning Device	Standard	Standard	Standard	Standard	Standard
Wiper Position Switch	Standard	Standard	Standard	Standard	Standard
Lamp Heaters	No	Standard	Standard	Standard	Standard
4-20mA Output	Optional	Optional	Optional	Optional	Optional
Modbus connectivity	Optional	Optional	Optional	Optional	Optional
Power Draw	403W	222W	222W	196W	196W
Inlet & Outlet Port size	2" MNPT	1" MNPT	1" MNPT	1" MNPT	1" MNPT
Nominal Dimensions (H x W x D)	56x11x9" (142x29x 22cm)	40x10x9" (103x24x 22cm)	40x10x9" (103x24x 22cm)	36x10x9" (93x24x 22cm)	36x10x9" (93x24x 22cm)

1 The suffix X will be either R for Reuse or W for Waste water.
2 The maximum flow of the unit will depend on various parameters such as UVT, TSS, and level of UV dose required. The Hallett 1000X is capable of specific flow and UVT configurations. The peak flow & min. UVT for the unit is indicated in the proposal document prepared by UV Pure. The Hallett 750W, 750R, 500W and 500R can be configured to high or low UVT applications by service technicians.
3 The Hallett 1000X is NWRI validated between 19-150mJ/cm^2. Third party validations are pending.
4 Values presented are without the flow restrictor. The flow restrictor adds significant pressure drop.
5 Amalgam lamp lifetime is 12,000hrs/500 days and LPHO lifetime is 9000hrs/375 days
6 Instant Start (I.S.) LPHO limited to 2 cycles/day; Preheat (P.H.) models have 6-12 cycles/day. Exceeding the recommended daily cycles will accelerate the age of the UV lamps. LPHO lamps perform more reliably when operated 24/7.

Unregulated Water Applications

Hallett Models[1]	**Hallett 1000NC**	**Hallett 750NC**	**Hallett 500NC**	**Hallett 400NC**[7]
Max. Flow Rate[2]	90 gpm 341 L/min 20.4 m^3/hr	34 gpm 129 L/min 7.7 m^3/hr	29 gpm 110 L/min 6.6 m^3/hr	21 gpm 79 L/min 4.8 m^3/hr
Performance Certifications[3]	3rd Party	3rd Party	3rd Party	3rd Party
Flow Restrictor	Optional	Optional	Optional	Optional
Pressure Drop[4]	1.9 psig (13 kPa)	6.6 psig (46 kPa)	4.6 psig (32 kPa)	2.3 psig (16 kPa)
Lamp Type	Amalgam	LPHO	LPHO	LPHO
Lamp Life[5]	16 months	12 months	12 months	12 months
Cycles/day[6]	6-12	2 (I.S.) 6-12 (P.H.)	2 (I.S.) 6-12 (P.H.)	2 (I.S.) 6-12 (P.H.)
UV Sensor	Dual	Dual	Dual	Dual
Built-in Purge Valve	Yes	No	No	No
Automatic Quartz Sleeve Cleaning Device	No	No	No	No
Wiper Position Switch	No	No	No	No
Lamp Heaters	No	No	No	No
4-20mA Output	No	No	No	No
Modbus connectivity	No	No	No	No
Power Draw	403W	222W	196W	162W
Inlet & Outlet Port size	2" MNPT	1" MNPT	1" MNPT	1" MNPT
Nominal Dimensions (H x W x D)	56x11x9" (142x29x 22cm)	40x10x9" (103x24x 22cm)	36x10x9" (93x24x 22cm)	32x10x9" (82x24x 22cm)

1 The NC Hallett models require pretreatment for high hardness or iron levels. Review sales literature for pre-conditioning requirements.
2 The max. flow is based on UV Dose of 40mJ/cm^2 at alarm setpoint at UVT of 85%. The max. flow and min. UVT values can be modified to suit applications.
3 Third party validations are pending.
4 Values presented are without the flow restrictor. The flow restrictor adds significant pressure drop.
5 Amalgam lamp lifetime is 12,000hrs/500 days and LPHO lifetime is 9000hrs/375 days
6 Instant Start (I.S.) LPHO limited to 2 cycles/day; Preheat (P.H.) models have 6-12 cycles/day. Exceeding the recommended daily cycles will accelerate the age of the UV lamps. LPHO lamps perform more reliably when operated 24/7.
7 The Hallett 400NC does not meet NSF/ANSI/CAN 61 or 372

4. INSTALLATION INSTRUCTIONS

Before Beginning Installation

Water Conditions - Pre-treatment Parameters

Note this section is designed to ensure the optimal performance of your Hallett system. Please review the following pre-treatment parameters prior to installation. If any specifications are of concern or unclear please contact your water treatment dealer or specialist. Note some of the information below is technical in nature and you may want to contact your water treatment specialist to review the parameters.



IMPORTANT - Should any of the following water parameters exceed the recommended limits; the system will not be serviceable under warranty. **DO NOT INSTALL THE UNIT** until you have confirmed the unit's capabilities matches the application – see Product Specifications Tables.

Water Parameters for Treating <u>Potable</u> Water:
The minimum water requirements are:

- **UV Transmittance (UVT)** – see Product Specification Tables. It is recommended for the water to be tested for UV transmittance in any applications using cisterns, surface water or ground water under the influence of surface water.
- **Total Dissolved solids (TDS)** - must be less than or equal to 1000 mg/L (mg/L=ppm)
- **Level of turbidity** - or cloudiness - of less than or equal to 1 NTU (nephelometric turbidity unit). In a point of entry application, a 5 micron sediment filter is recommended before the unit to reduce turbidity (the presence of a filter will also simplify disinfection of plumbing – see *Disinfecting the Plumbing* section). For surface waters, a dual gradient pre-filter (75x25 or 50x5) is recommended.

Water Parameters for Treating <u>Waste & Reuse</u> Water:
The minimum water requirements are:

- **UV Transmittance** (**UVT)** – The minimum UVT level is 50% or as indicated in the proposal document prepared by UV Pure.
  Total Suspended Solids (TSS) - The amount of suspended solids affect treatment by blocking UV light. The maximum TSS level is 20 mg/L or as indicated in the proposal document prepared by UV Pure.

Parts Included

- UV system complete with integral wall brackets (1)
- Ultraviolet lamps (2) – installed within the unit
- Instruction manual (1)
- Power cord (1) (located within packaging)
- 20 feet of flexible hose to connect purge valve to drain (if applicable)
- Flow Restrictor (only for NSF/ANSI 55 Class A units, optional for other units)

Optional - Automatic shutoff solenoid valve
- Stainless flexible hoses (useful for installation & maintenance)
- Pre-treatment sediment and or carbon filter designed to remove water particles, odor or trace chemicals for improved taste.
- Strain Relief Kit for external wiring # GD21

UNIT (MODEL)	Ø NPT MALE	A inches [mm]	B inches [mm]	C inches [mm]	D inches [mm]	E inches [mm]
Hallett 1000XX	2"	55.8" [1418]	47.8" [1214]	11.5" [291]	18.4" [467]	45.9" [1166]
Hallett 750XX	1"	40.4" [1026]	33.5" [850]	9.6" [244]	16.5" [420]	30.5" [774]
Hallett 500XX	1"	36.5" [926]	29.5" [750]	9.6" [244]	16.5" [420]	26.5" [674]
Hallett 400XX	1"	32.4" [823]	25.4" [646]	9.6" [244]	16.5" [420]	22.4" [570]

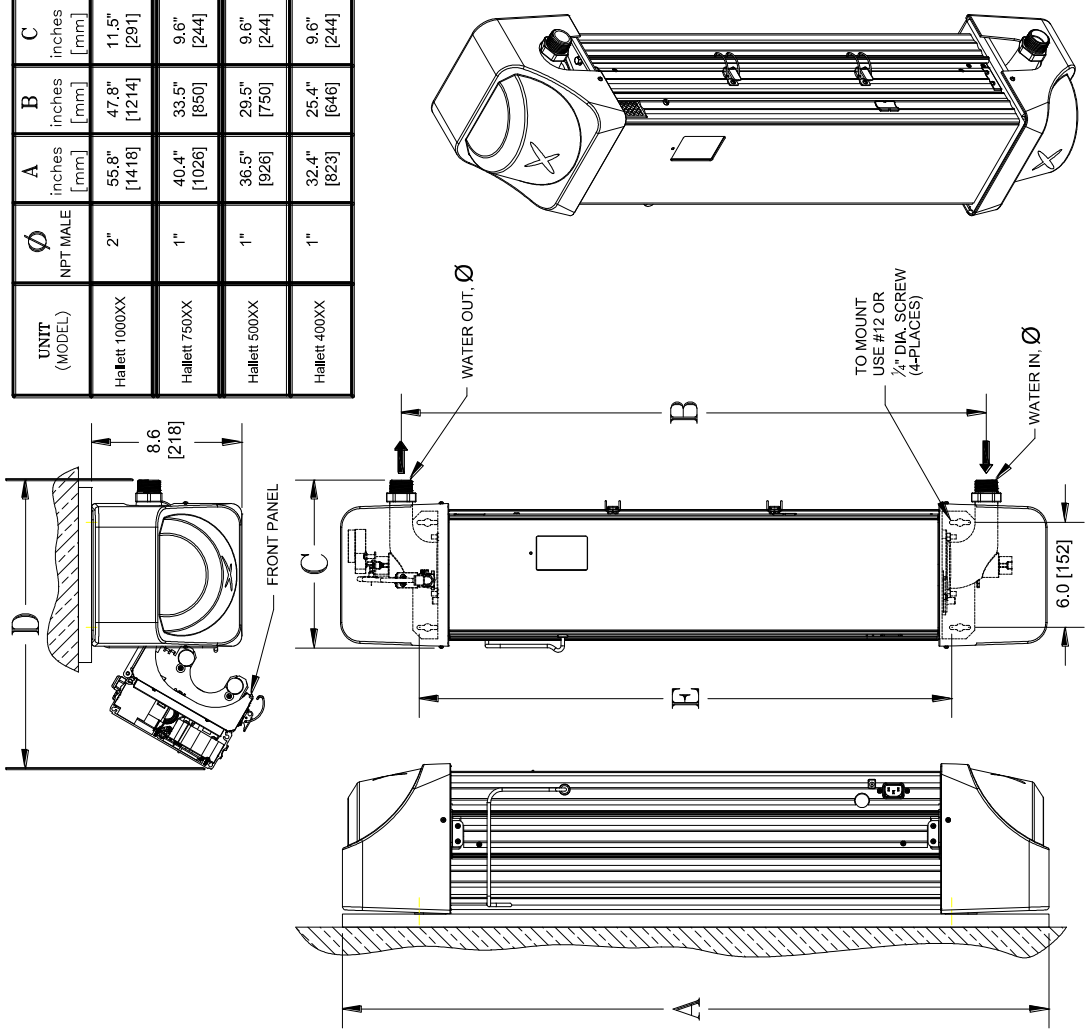

Figure 4.1

Other Materials Needed

The UV Pure unit requires four #12 to 1/4" diameter fasteners (not provided) to mount to a wall. Pipe insulation is recommended for any overhead piping to prevent condensation from dripping onto unit. The unit also requires a drain for the purge valve discharge line.

Warning – Use metal piping such as copper or stainless steel at the **outlet** of the UV unit since water temperatures can reach 176°F (80°C) if the UV unit operates without water flow or the ability to purge. **DO NOT USE PVC**.

These fittings, pipe insulation, and any piping compatible with the plumbing should be on hand before you begin installation. See Figure 4.2 and make a list of all necessary components including solder, paste and thread sealant. Bypass piping and valves that isolate the unit are optional, (but recommended) as is a drain valve for draining the unit.

Tools Needed

- pipe cutter, torch and other typical plumbing tools for modifying piping
- Wrench for tightening hose connections
- Phillips screwdriver
- Slotted screwdriver

Location



Warning - The unit must be positioned vertically on a solid wall **(the performance of the system will be adversely affected if mounted horizontally or is subjected to vibrations).** The installation of the unit (see Figures 4.1 through 4.4) should be done in compliance with all applicable federal, state/provincial, and local regulations. We recommend that the unit be installed by a qualified service technician. Failure to install the system properly may result in property damage (leaks/flooding) or personal injury (electrical shock) and will void warranty.

In a potable water application, the UV Pure unit should be installed downstream of (after) any pre-treatment devices such as filters, water softeners etc and also any pressure tanks. However, it must be installed **before any branches** in the piping so that **all** the water is disinfected before splitting and distributing throughout the home or facility. The unit **must be before** any chlorine injection system or this will void warranty.

Time Required

Please note that full installation of the Hallett requires shutting off the main water supply for a number of hours. If disinfection is necessary, all pipes must be treated and flushed. Once the unit is plugged in, the new UV lamps may take from a few moments to several hours to reach full power depending on the type of lamps. Having a Dose Alarm is normal with a new system (or with newly installed lamps) until the lamps have reached full power.

Summary of Installation:
Unpack and install Hallett on a wall
Prepare connections to inlet and outlet ports
Install purge valve discharge line to a suitable drain line
Install optional shutoff solenoid valve
Install optional bypass & drain plumbing
Check for leaks
Install insulation to overhead piping
Connect system power cord from unit to GFCI

Assembling the Unit

Step 1: Unpack the unit, being careful to remove all packaging material. Inspect the unit for damage particularly the quartz sleeve – See the *Accessing UV Chamber* section. Check if UV lamps are fully inserted. Write model number, serial number, & installation date on front on the Instruction Manual.

Step 2: The UV unit has keyhole slots for convenient mounting – use all four mounts. **Do not mount the unit directly to an outside wall; mount on plywood or shims – See Figure 4.1.** Remove the top and bottom covers of the unit to make the mounting holes accessible. Mounting hole templates are provided to simplify installation.

Step 3: The unit can be connected directly to the water mains or using the optional Stainless flexible hoses purchased through UV Pure. Use only new hoses; old hoses should be discarded. If hoses are being used, connect them now to both the top and bottom of the unit. Make sure that the sealing washer is inside the hose end before making the connection. Hold the stainless manifold with a wrench then tighten the hose securely.

Connecting the Pipes



Warning - Water must flow into the inlet at the bottom of the unit. The outlet is located at the top of the unit. For 1" systems, hold the stainless manifolds with a wrench when tightening mating connections. For 2" systems, the pump flange should be removed and threaded into mating connection then reconnected to UV unit. Do not damage sealing surfaces.



Caution: Always shut off the water supply and relieve the water pressure before beginning any plumbing modifications.

Step 1: See Figure 4.2 on how to arrange the piping and optional devices such as the solenoid valve, bypass line, sample ports and drain. If the pressure tank is downstream of the unit, a purge valve relocation kit is required (# GE3).

Step 2: The optional solenoid valve ensures that should the system fail, due to power loss, low UVT or low UV lamp output, the system will fail in safe mode and shut down the water flow. It is recommended install the solenoid valve just after the UV unit provided that a flood detection device exists at the site – this allows the unit to purge during alarm situations. If a flood detection device is not present, install the solenoid valve ahead of the UV unit. The direction of flow through the solenoid valve is important – verify flow direction with label on the valve. Water will not flow backwards through the valve. Keep the coil of the valve pointing upward (to prevent water from dripping on it). The valve requires minimum 69kPa (10psig) to fully open.

The optional solenoid valve is normally closed and must be powered to open. Some of the solenoid valves offered have a manual override (white lever) that can be used to force the valve open. In any regulated sites such as municipal applications, the manual override should not be used. For normal operation,

always leave valve in automatic position. In the *Advanced Settings* menu, item 2.7.3, toggle the valve to be “Installed” and a monthly reminder will appear to test valve. Please test valve monthly.

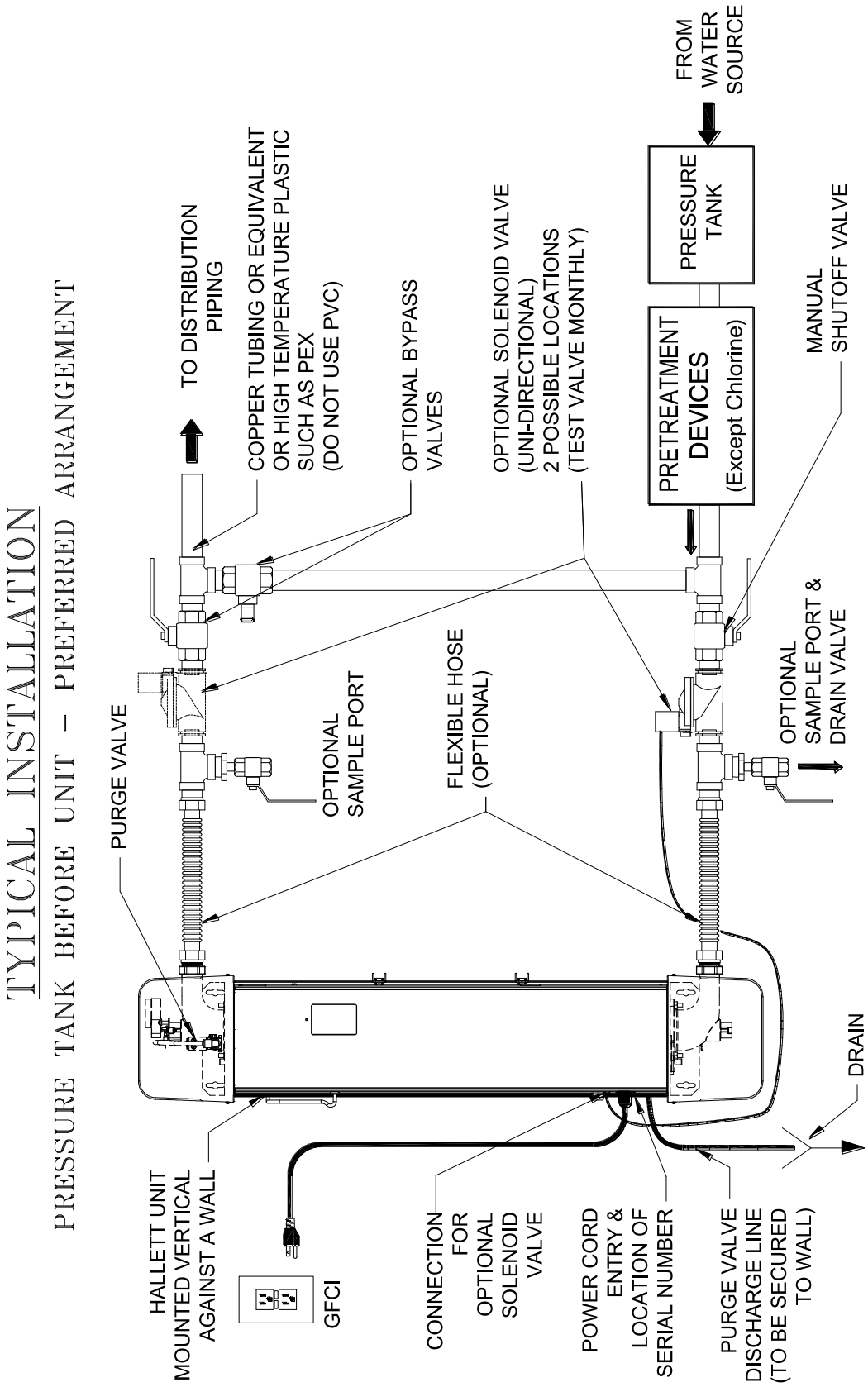

Figure 4.2

Step 3: Connect the purge valve to a drain using the tubing provided – see Figure 4.3. Note that an air gap is typically required between tubing and drain - follow local plumbing regulations. The tubing can be placed down the back side of the unit. The tubing should be secured to the wall or floor to prevent it from moving during the purging cycle. **During startup of the unit, it is strongly recommended to test the purge valve to confirm connections are free of leaks and the water discharges to drain.**

Step 4: Caution: do not allow the inside of the unit to get wet. Before opening the water supply, double check all connections and taps. Slowly turn on the water supply, vent out trapped air and check for leaks. If leaks exist, investigate the cause and repair before plugging in the unit.

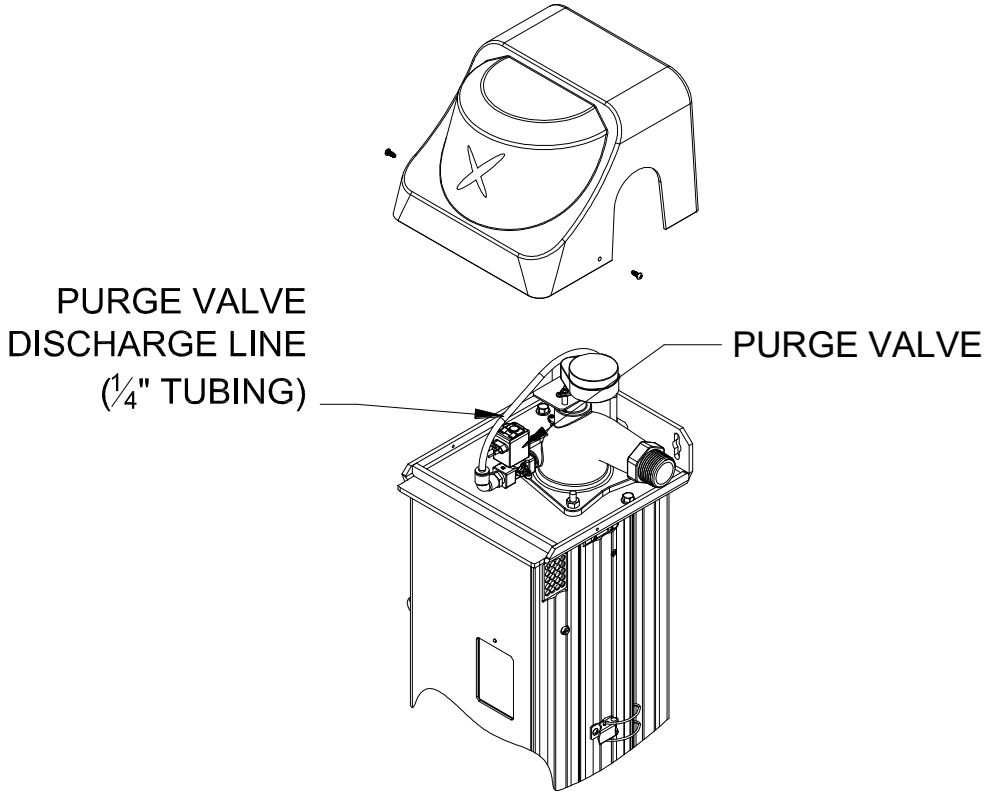

Figure 4.3

Step 5: Once the system is checked for leaks under full system pressure, install pipe insulation to any overhead piping to prevent condensation from falling onto or into the unit.

Important: after the unit has been operating for a few hours, check all connections for leaks (specifically at flexible hoses if purchased). **Repeat this procedure periodically.**

Parallel Installation

When more than one unit is installed in parallel (flow split between units), the

units must be installed with manual shutoff valves both upstream and downstream of each unit. This allows one unit to be serviced without interrupting the flow to the other units. Another requirement is the installation of a check valve downstream of the UV unit (after the UV unit). This will prevent the backflow of water to a unit.

Installation is now complete.

Control Interfaces



WARNING: Shutdown and unplug the unit before installing any external wiring.

External wiring can be introduced through a port in the left side of the unit – see Figure 4.4. By default, a plug is installed into this port in a standard unit and a strain relief (Kit # GD21) can be purchased if connection to remote devices is required. For External Contacts and Remote Start/Stop, 20 gauge wire is recommended and if the 4-20mA option is used, 20 gauge wire with foil and drain wire. Install wires onto spring cage terminals provided.

External Contacts

All Hallett systems provide two “dry” contacts for remote alarms or autodialers – the word “dry” indicates no voltage present at the contact. The first contact labeled RUN is a “System Run” condition – when closed, the unit is treating; if the contact is open, the unit is in alarm, has lost power, or perhaps the wire has been cut. The second contact labeled WARNING is to indicate the existence of an abnormal condition such as high water temperature. When this contact is open, the system is normal; when this contact is closed, a warning condition exists. Both contacts are meant for control purposes only, not to drive devices. The maximum rating of the contact is 24 Vac or Vdc, 2A.

Remote Start/Stop

All Hallett systems have remote start/stop capability which allows them to remain idle without operating the UV lamps. When a signal is given (voltage applied), UV lamps are energized. This is convenient for locations requiring periodic disinfection such as pump houses. The voltage rating range of the contact is 5-24 Vdc or Vac, 0.5W max. The remote start/stop is disabled by default and can be enabled in the Advanced Settings menu.



Caution: Avoid continuously starting and stopping the unit within a 24 hr period, as this will accelerate the aging of the UV lamps and will not be covered under warranty. See Product Specification Tables for permissible lamp cycles.

4-20mA & Modbus Option

A 4-20mA option is available on certain models. This device will provide a continuous analog output signal for UV Intensity and UV Transmittance. Modbus capability will also be available when the 4-20mA option is purchased. For more details, refer to the 4-20mA Instruction Sheets which are supplemental to this manual.

Data Logging on USB Option

Data logging capability is an available option on all Hallett units. A small USB drive is used to record system performance every 30 seconds. The USB drive has the capacity to store up to 4 years' worth of daily records. For more details, refer to the Data Logging Instruction Sheets which are supplemental to this manual.

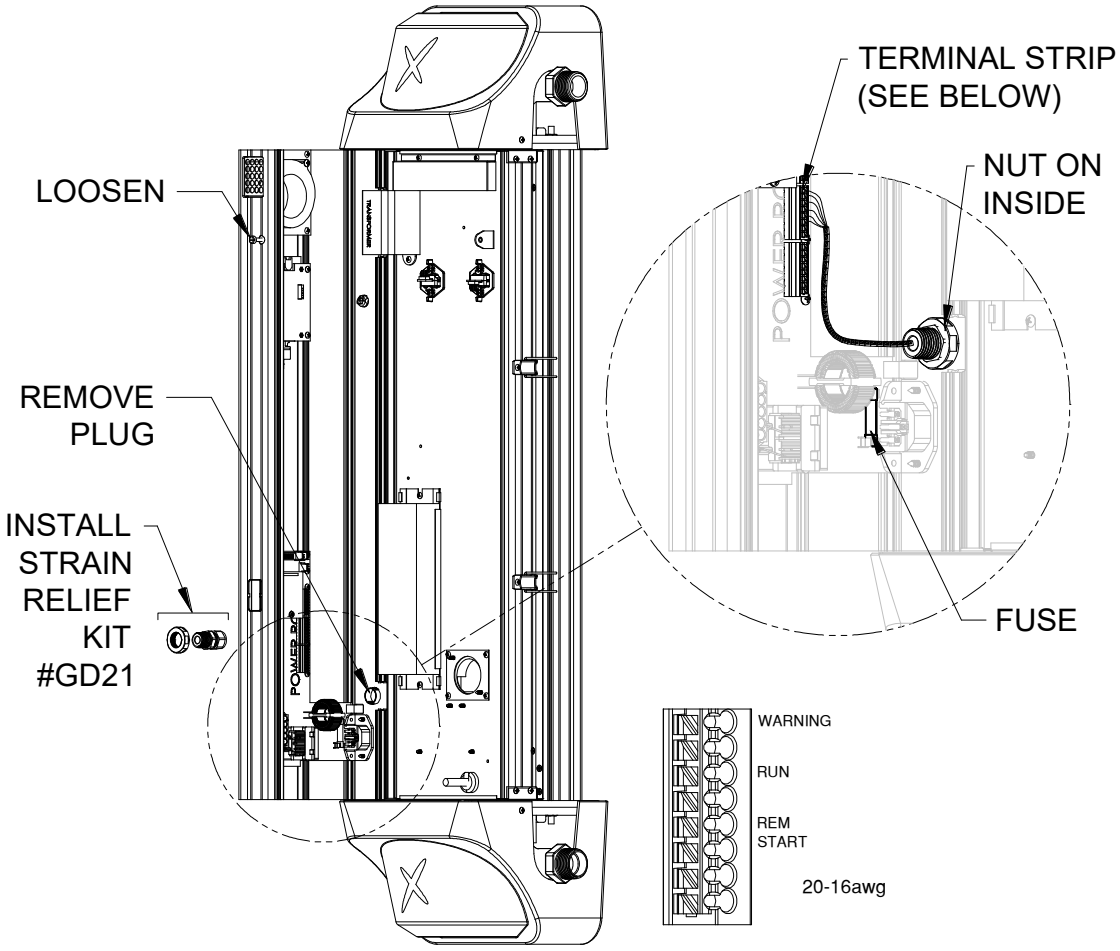

Figure 4.4

5. Operating Instructions

The Hallett applies advanced Crossfire Technology yet is simple to operate. The automatic quartz sleeve cleaning technology available on most models has been designed to reduce, and in most cases, eliminate the periodic shutdowns necessary to inspect the cleanliness of the quartz sleeve. The only required maintenance is the replacement of the two UV lamps.

The unit should be operated with both top and bottom plastic covers installed.

Unit Functions

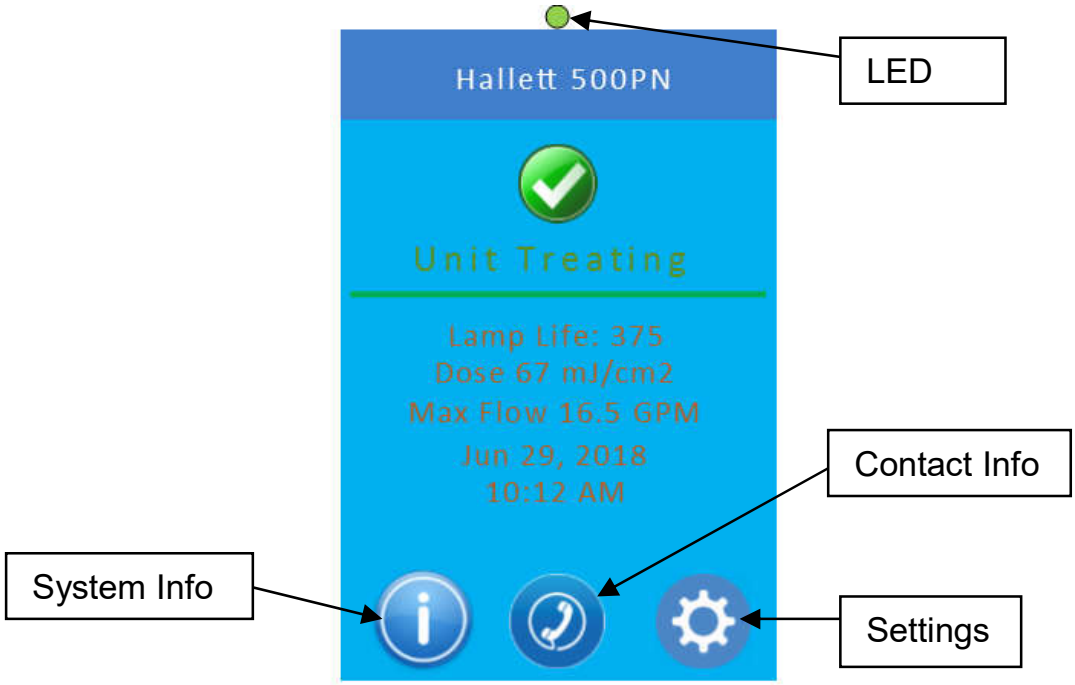

Figure 5.1

The user interface consists of a color touchscreen and a single multi-color LED. See Figure 5.1. The LED will always be illuminated when the UV unit is plugged in and powered up. The touchscreen enters sleep mode after 10 minutes and requires the user to touch it to wake it up. The touchscreen will change colors if any significant event occurs such as warnings or alarms. See the section on *Navigating the Menus* for a complete layout of the screens.

Indicating LED

Green Light – an illuminated green light indicates the unit is treating normally. A slow flashing green light means the UV lamps are not yet at full power or the unit is in standby mode awaiting a remote start. A fast flashing green light means the wiper is cycling.

Red Light – an illuminated red light indicates either a warning or an alarm has occurred. A warning is a condition that, if not addressed, could impact the unit's performance. Warnings should be addressed as soon as possible. Warnings are accompanied with a flashing red LED, a single beep, a message, and a yellow screen. An alarm is a condition that has significantly impacted the unit's performance and it must be addressed immediately. Alarms are accompanied with a solid red LED, continuous beeping, a message, and a red screen.

Audio Alarm

The audio alarm or beeper, will alert the operator to any conditions out of the ordinary. A single beep will sound if a warning occurs; continuous beeping will sound if an alarm occurs. The audio alarm may be disabled temporarily or permanently in the Settings Menu, item 2.3. The sound level of a unit operating normally is less than 70db(A). However, sound levels can exceed 85 db(A) with the audio alarm on.

Navigating the Menus

0 Home

- 0.1 Model name
- 0.2 Treatment Status
- 0.3 Lamp Life
- 0.4 UV Dose
- 0.5 Max Flow or Flow Signal (Optional)
- 0.6 Date & Time

0A Contact Info

Text: Company, Phone, Installation date

1 System Info

- 1.1 UVT
- 1.2 UVI
- 1.3 Left Lamp UV
- 1.4 Left Water UV
- 1.5 Right Lamp UV (If available)
- 1.6 Right Water UV (If available)
- 1.7 PCB Temp
- 1.8 Sys Temp
- 1.9 Water Temp
- 1.10 Lamp Temp
- 1.11 Wiper Countdown
- 1.12 Daily Starts
- 1.13 Firmware Version
- 1.14 Total Starts
- 1.15 Power-ups
- 1.16 Life-time counter
- 1.17 CH1 - Analog Output
- 1.18 CH2 - Analog Output

2 Settings

- 2.1 Date & Time
- 2.2 Power Down
- 2.3 Audible Alarm
- 2.4 Units (Imperial/Metric)
- 2.5 Reset Lamp Counter
- 2.6 Message History (Last 100 messages)
  - 2.6.1 {Message 1}
    - 2.6.1.1 UV Dose
    - 2.6.1.2 Water Temp
    - 2.6.1.3 Estimated UVI
    - 2.6.1.4 Estimated UVT
    - 2.6.1.5 Left Lamp UV
    - 2.6.1.6 Left Water
    - 2.6.1.7 Right Lamp UV
    - 2.6.1.8 Right Water
    - 2.6.1.9 Lamp Temp
    - 2.6.2.0 PCB Temp
    - 2.6.2.1 System Temp
  - 2.6.2 {Message 2}
  - 2.6.3 ...

Typical message screens shown below:





- 2.7 Advanced Settings
  - 2.7.1 Force Outputs
    - 2.7.1.1 Lamps
    - 2.7.1.2 Wiper
    - 2.7.1.3 Purge Valve
    - 2.7.1.4 Shutoff Valve
    - 2.7.1.5 Fan UV
    - 2.7.1.6 Fan PCB
    - 2.7.1.7 Warning Contact
    - 2.7.1.8 Run Contact
    - 2.7.1.9 Buzzer
    - 2.7.1.10 Heaters
    - 2.7.1.11 C1-4-20mA signal
    - 2.7.1.12 C2-4-20mA signal
    - 2.7.1.13 Interlock for UV door
    - 2.7.1.14 Wiper Positioner switch
    - 2.7.1.15 Remote Start/Stop Signal
    - 2.7.1.16 Fault 1
    - 2.7.1.17 Fault 2
    - 2.7.1.18 Lamp Temp
    - 2.7.1.19 Water Temp
    - 2.7.1.20 Analog In
    - 2.7.1.21 System Temp
    - 2.7.1.22 PCB Temp
    - 2.7.1.23 DC Volts
    - 2.7.1.24 L Lamp Sensor
    - 2.7.1.25 L Water Sensor
    - 2.7.1.26 R Lamp Sensor
    - 2.7.1.27 R Water Sensor
    - 2.7.1.28 CAL - L Lamp
    - 2.7.1.29 CAL - L Water
    - 2.7.1.30 CAL - R Lamp
    - 2.7.1.31 CAL - R Water
  - 2.7.2 Remote Start
  - 2.7.3 Shutoff Valve
  - 2.7.4 Set Defaults
  - 2.7.5 Language
- 2.8 Password for Advanced Menus

Starting the Unit

Plugging in the Hallett for the first time

Step 1: Ensure that all external wiring is complete (see *Control Interface*s section) and all the panels of the unit are closed before connecting the power cord.

Step 2: Plug the female end of the power cord into the power entry module located on the left side of the front panel. Plug the male end of the power cord into a ground-fault circuit-interrupter (GFCI).



Caution: Avoid continuously starting and stopping the unit within a 24 hr period, as this will accelerate the aging of the UV lamps and will not be covered under warranty. See Product Specification Table for permissible lamp cycles.



Caution: Do not operate unit dry. There must be water in the treatment chamber to prevent damage to internal components.

In the event of a lack of water or water supply being turned off, shutdown the unit until the water supply can be restored. In the event of a power failure, the unit will shut down and the optional solenoid valve will close, preventing water from flowing. When the power returns, the unit will automatically restart and perform a self-test. If no faults are detected, the unit will return to normal operation and the optional solenoid valve will open. Note that even during a brownout, the supply voltage may drop low enough to cause the unit to shut down. If the unit does not automatically restart as described above, shutdown and unplug the unit and plug it in again.

Step 3: Once the unit is plugged in, the LED illuminates, an audible tone is issued and the display becomes active to confirm all three devices are functional. The unit then performs a self-diagnostic. The user/installer should enter the date of installation in the Settings Menu, and treatment parameters if required.

Step 4: When the UV Lamps have started, (lamp ignition for amalgam lamps may take up to 30 seconds) the unit will wait at 10 - 15 minutes depending on the model to allow the lamps to stabilize before transitioning into Treating mode. This will occur every time the UV lamps are powered up. During this warm up, the green LED will flash, the unit will display the countdown to startup, and the optional shutoff valve will remain closed. **New LPHO lamps may take from a few moments to several hours to reach full power. Continue to operate the unit until the lamps reach full power – this may last 24 hours. It is recommended for new LPHO lamps to be operated initially 3-4 hours as a burn-in to achieve lamp stability.** When the warm up process is complete, a solid green light appears and the message “Unit Treating” will be displayed. The optional solenoid valve will be allowed to

open only if treatment levels are adequate, otherwise it will remain closed. This is the normal operating mode of the unit.

During normal operation if a power outage occurs, upon return of the power, the unit will start up automatically and perform a diagnostic check. After a 10-15 minute stabilization period, the unit will begin treating if treatment levels are adequate, otherwise an alarm will be issued if the unit is not treating.

Test the wiper motor and purge valve - see Advanced Settings menu, items 2.7.1.2 and 2.7.1.3.

Flushing Instructions

Flushing the system is required after installation or after any disassembly and cleaning. Flushing may also be required to remove colored or contaminated water from the unit. Most filters (if installed) also require flushing prior to use – follow the manufacturer's recommendations.

The system may be flushed in two ways. It can be done manually by disassembling the unit and filling and draining the unit by hand (see *In-place Cleaning* section). Flushing may also be done while the unit is operating. Plug in the unit and open a tap closest to the unit and have the water flow for a minimum of 15 minutes.

Shutting Down of Unit and Seasonal Use

To shut the unit down, initiate the Power Down procedure located as the second item in the Settings Menu. When this procedure is complete, simply unplug the unit.

The Hallett can operate for extended periods of time without water usage **as long as pressurized water is present to allow for purging.** The unit may be shutdown in the case of seasonal residences or during a vacation. If the possibility of freezing exists, the unit and any valves and filters must be drained. (See *Draining the Unit* section.)

Disinfecting the Plumbing

Disinfection of the household or facility plumbing should be performed after the Hallett has been installed and is operating. This procedure should also be done if the unit is not functioning normally; if a bypass has been used; or if there has been a high background bacteria count in a water sample. UV Pure has found that disinfecting the plumbing will ensure that any potential bacteria or contaminants in the distribution system are treated prior to system use.

Please note that this procedure is ineffective against protozoa that can be found in surface water or shallow wells under the influence of surface water. Under these circumstances, it is important to perform the disinfecting procedure and then operate the Hallett. UV Pure has found that this procedure does not work with sediments or heavy biofilm and encrustations, which must be removed mechanically.





UV Pure recommends sanitizing the household or facility plumbing by adding

50 ppm chlorine from bleach for 12 hours and then flushing. This can be achieved by doing the following:

Step 1: Shutdown and unplug the unit.

Step 2: Shut off the water supply and relieve the water pressure by opening a tap.

Step 3: Remove the filter from its housing and fill the housing with bleach

Step 4: Re-mount the housing (but not the filter) and plug in the unit to turn it on.

Step 5: Once the unit is operating, turn on the water supply and have the water flow to all taps (hot and cold), toilets, the washing machine and other water-using appliances – the bleach must fill every inch of plumbing. The Dose Alarm may arise due to low UVT after the introduction of bleach. If this occurs, use the manual override on the optional solenoid valve to keep valve open during procedure. **Return override to auto position afterward.**

Step 6: When you detect the odor of chlorine at each spot, turn off the water and let the bleach remain in the lines for at least 12 hours and **turn off** the UV unit during this time.



Caution: Do not allow corrosive chemicals to remain in the unit for more than 12 hours – Do not operate unit during this time period as heating the water will increase corrosive nature of chemicals.

Step 7: After the waiting period is over, plug in the unit. Once stable, flush every line for at least five minutes or until the odor of chlorine is gone. See local regulations for proper disposal of chlorine residual, especially in the case of discharge into a septic system.

Step 8: Now that the disinfection procedure is complete you will need to return the filter to its housing. Shut off the water supply, relieve water pressure by opening a tap, and return the filter to the housing. Allow a few days after a disinfection procedure before getting a sample since residual chlorine may affect the results.

Have the water tested by a local recognized testing agency prior to any water consumption. UV Pure partners with water testing organizations in select locations throughout North America. Contact UV Pure for potential water testing partners: 1-888-407-9997. The testing should be performed on a regular basis as required by local regulations.

Automatic Quartz Sleeve Cleaning Device (available on most models)

The self-cleaning feature of the Hallett system involves a wiper turning inside the quartz sleeve. The wiper operates soon after power up of the lamps and then every 4 hours it will cycle for 5 minutes. The wiper can be enabled anytime in the Advanced Settings menu, item 2.2.1.2. The LED will flash

quickly during a wiper cycle.

Built in Purge Valve (available on most models)

The Hallett contains a flushing or purge valve that cycles water through the unit during long periods of no water usage. The unit monitors water usage by measuring the rise in water temperature within the treatment chamber. During periods of no water flow, the purge valve on the small units can expel 1 gallon (4 liters) of water every 60-90 minutes; the largest unit can expel up to 4 gallons (15 liters). If the largest unit fails to purge and the water temperature exceeds 113°F (45°C), the unit will shutdown to prevent overheating.

6. TROUBLESHOOTING

The Hallett will operate unattended until a fault arises.

If an **alarm** occurs, the solenoid valve (optional) will close, preventing water from flowing; the LED turns red; the audio alarm will beep continuously; the touchscreen turns red and displays a message; the RUN contact will open to indicate the unit is no longer treating. The fault should be corrected to return the unit to normal operation and have the water flow again.

If a **warning** occurs, the solenoid valve (optional) remains open; the LED flashes red; the audio alarm will beep once; the screen turns yellow and displays a message; the warning contact will close to indicate the unit is still treating but in an abnormal state. The warning should be addressed as soon as possible and if left unattended, could turn into an alarm.

The Message History, available in the Settings menu, item 2.6, is very useful in troubleshooting since it contains up to 100 messages/events with associated recorded data such as times, UVI, UVT, UV sensor values, and temperatures.

In the event of an alarm, in many cases, a physical inspection of the unit with the power off should be done to try to identify a cause. A slow water leak for instance, near the top of the unit could stain lamps or reflectors and may not be uncovered without a full system inspection.

Dose Alarm

The Dose Alarm occurs when there is insufficient UV dose to treat the maximum flow rate prescribed by the unit. The Dose Alarm could be a result of low UV intensity or low UV Transmittance (UVT) or a combination of both. Review both values in the System Info Menu to determine which is causing the alarm and take corrective action. It is highly recommended to have a UVT sample taken to confirm system prediction.

The Advanced Settings menu under Force Outputs conveniently provides the ability to manually turn on and off devices to confirm their operation. Devices return back to their automatic position after 10 minutes.

Cycling the power is also useful to occasionally reset the software.

Troubleshooting Guide

System Status	Possible Cause	Corrective Action
No Power (LED is off, touchscreen is off)	Ground-fault circuit-interrupter (GFCI) tripped.	Check for water leaks. Reset GFCI.
	Fuse Blown.	Check for water leaks. Replace fuse (see Fig. 4.4 for fuse location)
	Touchscreen pcb not connected to power pcb.	Ensure ribbon cable is connected at both ends.
	Circuit Board is damaged.	Confirm if Power pcb has any illuminated LEDs. If so replace Touchscreen pcb (LCD).
UV Lamps not starting (occurs after 6 unsuccessful attempts)	UV Chamber interlock not engaged.	Check that each latch is correctly positioned and secure UV chamber door.
	# of lamp starts have exceeded specification.	Review Total Lamp starts in System Info Menu. Replace lamps but reduce future lamp cycles.
	UV lamp failure	Replace lamps
	UV Ballast Failure	Replace ballast
	Over temperature condition.	Either the system, pcb or water temperature has occurred. Allow to cool off and investigate cause by reviewing Message History.
UV Lamps on but UVI is low	Lamps are warming up after a power interruption.	Allow lamps up to 15 minutes to reach full power
	New LPHO lamps installed.	First time LPHO lamps are turned on it may take 3 to 4 hours to reach full power. After this initial “burn-in”, warmup time will be a few minutes.
	The UV output of the lamps have diminished.	Lamps have exceeded their lifetime. Replace lamps.
		# of lamp starts have exceeded specification. Replace lamps but reduce future lamp cycles.
	UV sensor requires recalibration/replacement.	Install reference sensor to confirm status of unit sensor.
	UV Lamps operating outside of recommended temperature conditions.	Check if UV blower is operating correctly.
		For cold water applications, increase room temperature or install LPHO lamp heater kit.
Water Temperature High Warning & Alarm	Warning issued when water temperature within the UV chamber exceeds 95°F (35°C) for H1000XX and 104°F (40°C) for H400-H750XX. Alarm issued when water temperature within the UV chamber exceeds 113°F (45°C) – UV Lamps are turned off (applies to Hallett 1000XX models)	Check if sufficient water pressure to operate purge valve. Check for blockage in purge discharge tubing. Check for debris in purge valve.
System Temperature High Warning & Alarm	The system temperature has exceeded a safe operating level causing the UV lamps to be turned off.	Check if water flow has been turned off. Check if operating temperatures have exceeded specifications. Check if both system blowers are operating correctly.
Circuit Board Temperature High Alarm	The temperature within the electrical chamber has exceeded a safe operating level causing the UV lamps to be turned off.	Check if operating temperatures have exceeded specifications. Check if the pcb blower is operating.
Wiper Not Turning Warning	The system has failed to detect wiper motion during the routine wiper cycle.	Check wiper motor operation
		Check wiper position switch & cam.

7. MAINTENANCE

The disinfection of water will occur as long as the unit is properly maintained with genuine parts in accordance with the instructions set out in this manual. Operating a malfunctioning unit or defeating any system sensors may jeopardize the safety of the water. Online videos are available to help with typical maintenance tasks. Simple tasks such as quartz inspections and lamp replacements can be done by end-user. More in-depth activities such as quartz replacement, should be done by authorized service representatives.

Test Shutoff Valve Monthly
The optional solenoid shutoff valve should be tested monthly to confirm it opens and closes. Unplug valve from unit to confirm water stops flowing. Plug the valve in again to confirm water continues to flow.

Clean Air Filter Periodically
The Hallett contain a washable air filter in the located at the air inlet port (See Figure 7.1). Periodically check and clean the filter to ensure blower operation is not impeded.

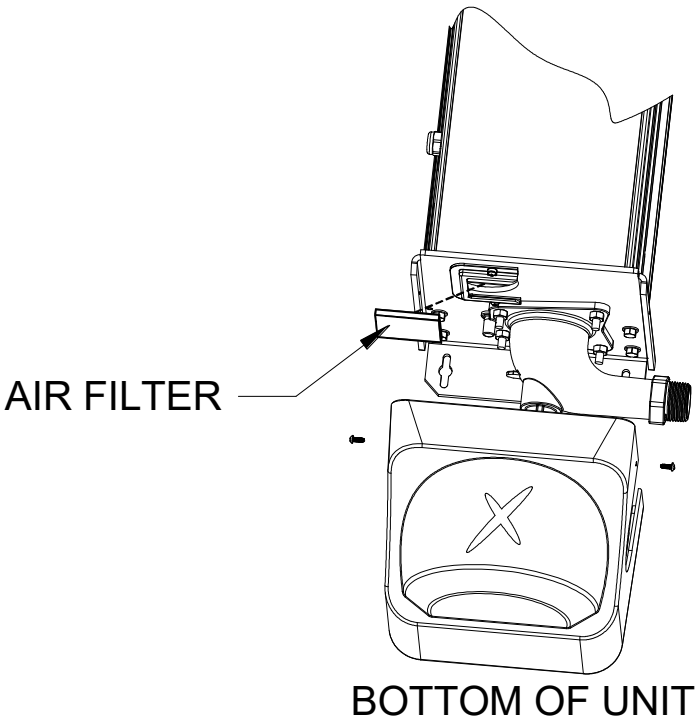

Figure 7.1



Accessing the UV Chamber



The UV chamber can easily be opened for lamp replacement or quartz sleeve inspection without having to drain the unit and without any tools.



Caution: Always shutdown and unplug the unit before accessing the UV chamber.

Step 1: Shutdown and unplug the unit then wait 5 minutes before opening the

UV chamber to allow the lamps to cool. The lamps heat up after continuous use and can burn your skin if touched.

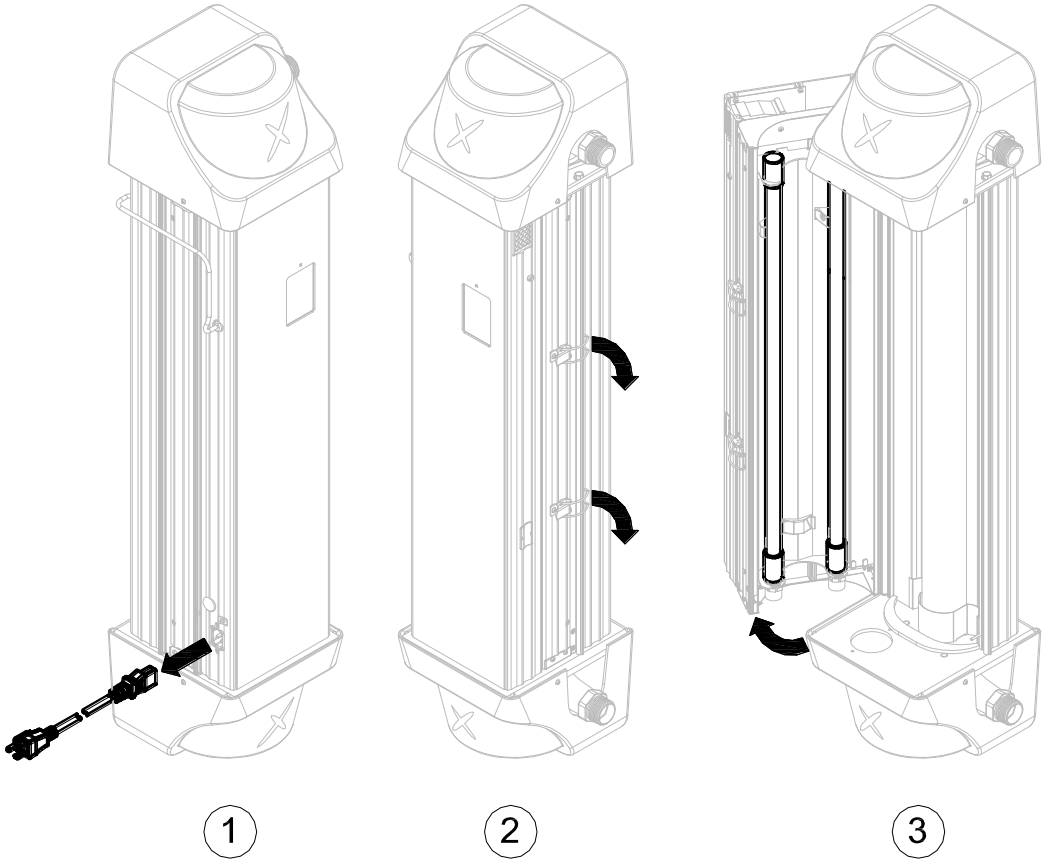

Figure 7.2

Step 2: See Figure 7.2. Open the UV Chamber by undoing the over-the-center latch (may be more than 1). Note where the latch wire engages the extrusion feature – it must be re-latched in same manner.

Step 3: Slowly swing the door completely to the left to reveal the two UV lamps installed in the front half of the UV chamber. Note that the quartz sleeve can be easily inspected.

Step 4: To close the UV chamber, slowly swing the door back towards the back half of the UV chamber. Close all over-the-center latches ensuring the wire correctly grabs the extrusion feature.

Step 5: Plug the unit in again.

Replacing and Cleaning UV Lamps

The Hallett contains two ultraviolet (UV) lamps that emit high-intensity UV light in the germicidal range, providing effective disinfection of the water flowing through the unit. The lamps in the unit will decay over time and they should be replaced every 12 or 16 months for optimum performance – see Product Specification Tables for lamp lifetimes. Note that lamps will only decay while in operation. Shutting down the system for seasonal use will

extend lamp life.

The unit has an internal timer to keep track of the lifetime of the lamps. The Hallett will issue a warning when the end of lamp lifetime approaches and it will warn again when the lamp lifetime is exceeded. The amount of life remaining on the lamps is measured in days and can be seen in the Home menu.

The lamps can be replaced in a few minutes. See Figures 7.3-7.5.



Caution: Do not allow water to flow until new lamps have been installed and reach full power.



Never touch the bulb (quartz portion) of a lamp with your fingers. Handle the lamp by its ends only. If the surface of the lamp becomes dusty or dirty, use a clean lint-free cloth and some rubbing alcohol to remove the dirt. For more difficult stains such as water spots, use a scale remover to remove the stain and then rubbing alcohol afterwards.





Tools Needed

- Slotted screwdriver



NOTE: Resetting the Lamp Lifetime counter will clear the Message History, Lamp Starts counter and Power Ups counter. If this information is required, review it first before proceeding to Step 1.

Step 1: Open the UV chamber as described in *Accessing UV Chamber* section.

Step 2: Use a slotted screwdriver and pry the lamps up between lamp base and ceramic socket, see Figure 7.3

When the bottom pins have disengaged the socket, lift the lamp up, then swing the lamp base away from socket. Lower the lamp to disengage it from the top lamp holder. With the lamp free from the unit, carefully place it aside and remove the other lamp.

Dispose of the old lamps in the same way as you would dispose of ordinary fluorescent tubes. Note that old lamps should be disposed of at a household waste management depot or transfer station; contact your local recycling and waste management authority for proper disposal procedures in your area.

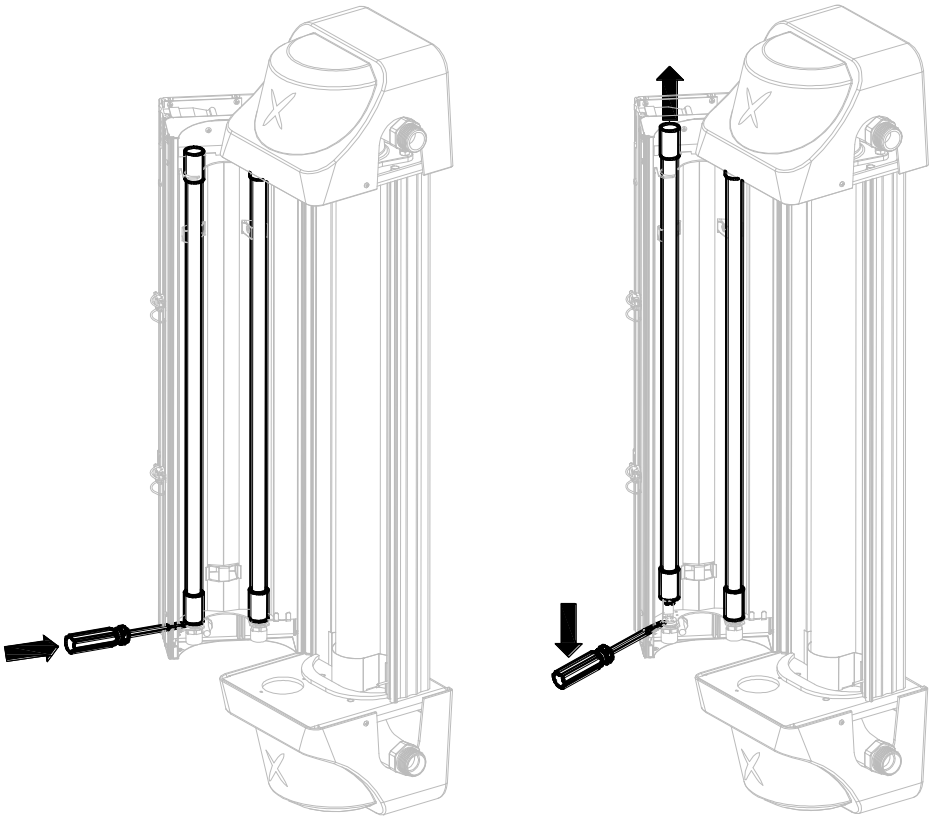

Figure 7.3

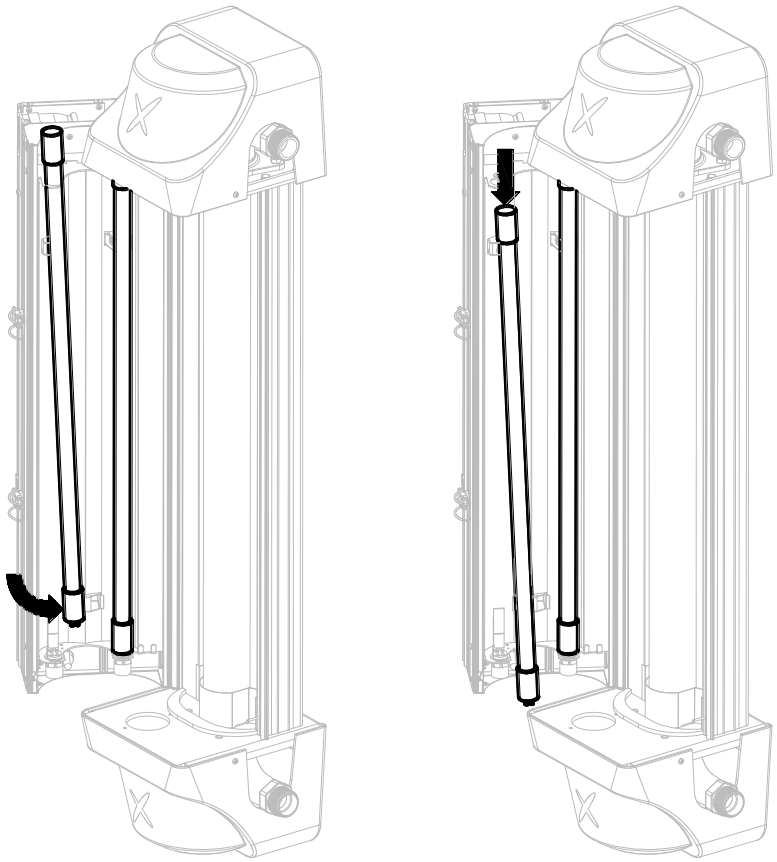

Figure 7.4

Step 3: Install the new lamps into the unit, one at a time being careful not to touch the bulb. Insert the top end of the lamp through the top lamp holder then swing lamp base in over the socket. For a LPHO lamp, rotate it until the “Stop Sign” symbol printed on the top ceramic is towards the left. See Figure 7.5. For an amalgam lamp, rotate it until the wires running down the lamp are facing the back of the unit. The proper orientation of the LPHO and amalgam lamp has the lamp wires opposite the UV sensors.

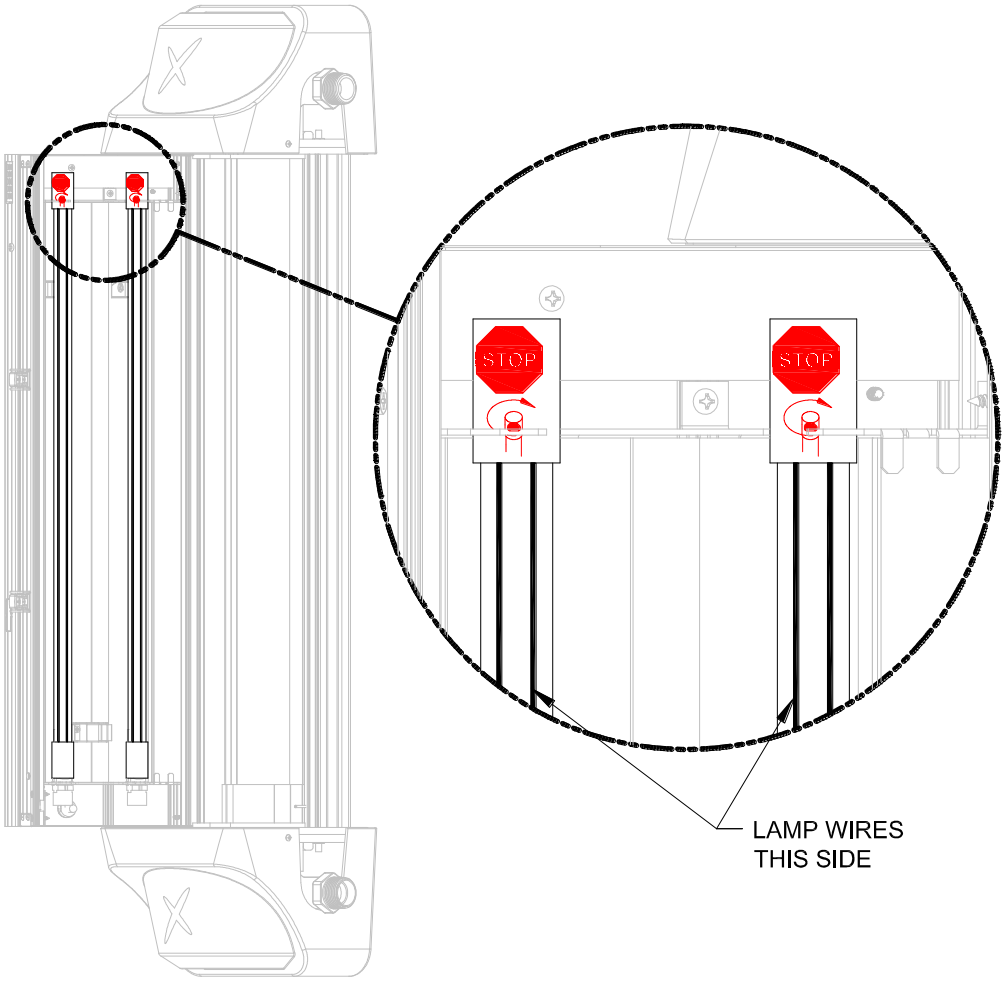

Figure 7.5

After the lamp has been rotated correctly, allow the 4 pins of the lamp to engage into the socket, push **firmly down** on the top of the lamp while holding socket. Do not twist the lamps when they are inserted. **Observe the base of the lamp to confirm the pins are fully seated into the socket.** Repeat for other lamp.

Step 4: Close the UV Chamber and secure door.

Step 5: Record the date of the lamp replacement in your Service Record Sheet.

Step 6: Plug in the unit. The lamp lifetime counter can be reset in the Settings menu, item 2.5 (365 days for LPHO lamps, 500 days for amalgam

lamps). **New LPHO lamps may take from a few moments to several hours to reach full power. Continue to operate the unit until the lamps reach full power.** The UV intensity value can be observed to confirm output levels. It is recommended for new LPHO lamps to be operated initially 3-4 hours as a burn-in to achieve lamp stability.

Draining the Unit

The Hallett does not normally require draining for routine operation or lamp replacement. Draining is necessary to disassemble the system, to protect against freezing, or to remove poor-quality water.

Tools Needed

- Pipe wrench

Step 1: Shut off the water supply and relieve the pressure.

Step 2: Shutdown and unplug the unit.

Step 3: Place a bucket under the unit to collect the water.

Step 4: Open a tap downstream of the unit to vent.

Step 5: If you have installed an optional drain valve, open the drain valve. If you do not have an optional drain valve, disconnect the flexible hose or piping at the bottom port to allow the system to drain for a few minutes. Note that the water will not flow backwards through the optional automatic valve.

Step 6: When draining is complete, close the drain valve or reconnect the flexible hose or pipe connections.

Step 7: Close any taps that were previously opened.

Cleaning the Unit

UV Pure has designed the automatic quartz sleeve cleaning device within the Hallett systems to virtually eliminate the disassembly and cleaning of the quartz sleeve - the quartz sleeve will remain clear and transparent as glass. If a component of the cleaning device fails, such as the wiper motor, or in extreme water cases with unique water chemistry, the quartz sleeve may become fouled and require manual cleaning. In this situation the Dose Alarm will arise and alert you to the unsatisfactory conditions. Follow the steps below to inspect the quartz sleeve and disassemble the unit for cleaning.



Determining the Need for Cleaning



Step 1: Shutdown and unplug the unit.

Step 2: Open the UV chamber as described in *Accessing UV Chamber* section.



Step 3: Examine the quartz sleeve both inside and out – See Figure 7.2. If it



is clean, no disassembly is required and the unit can be closed. Restart the unit by plugging it in.

Step 4: If the quartz sleeve is dirty on the outside, proceed to wipe it down with a clean lint-free cloth and rubbing alcohol to remove the dirt. If the quartz sleeve is dirty on the inside, proceed with in-place cleaning or disassembly.

In-place cleaning

This procedure will clean the quartz sleeve without its removal from the unit. This is a quick and easy procedure that works well in most cases.

Tools Needed



- slotted screwdriver
- Philips screwdriver
- Pipe wrench



Step 1: Fill a bucket or container with 1 gallon (4 liters) of clean water - this will be required later to clean the quartz sleeve. A squeeze bottle is useful for applying water or cleaning solution to the inside of the quartz sleeve.



Step 2: Shutdown and unplug the unit.



Step 3: Shut off the water supply and relieve the pressure.

Step 4: Open the UV Chamber as described in *Accessing UV Chamber* section.

Step 5: Place another bucket under the unit and drain the unit until there is about 1” (3cm) of water left in the quartz sleeve (see *Draining the Unit* section).

Step 6: Disconnect the fitting at the top outlet port of the UV unit. If the stainless flexible hose was installed, disconnect the hose opposite from the UV unit then bend the open end upwards – this will make the next step easier.

Step 7: Add about 2 oz. (60cc) of cleaning solution to the top hose/manifold. The cleaning solution can be a citric acid, vinegar or other non-hazardous solutions. **Any solution used should be thoroughly rinsed out afterwards.** Fill the rest of the quartz sleeve with water.

Step 8: Let the cleaning solution remain in the quartz sleeve for at least 10-20 minutes.

Step 9: Manually turning the wiper may greatly assist the cleaning process. To do this, remove the top plastic cover then remove the motor and turn the wiper shaft with a slotted screwdriver (counterclockwise while looking at the shaft). If the optional wiper positioner switch is installed, leave the trigger cam in place.

Step 10: Drain the unit and inspect the quartz sleeve. If clean, flush the unit with clean water. If fouling remains, repeat procedure or proceed to disassembling the unit.

Step 9: Once the unit is clean, reassemble the system including the motor, plastic cover, top port connection(s) and UV chamber door.

Step 10: Slowly open the water supply and check for leaks.

Step 11: Restart the unit by plugging it in.

Disassembling the Unit



NOTE: This procedure is not recommended for untrained users - please contact your certified water specialist to assist should disassembly be required.



Tools Needed

- slotted screwdriver
- Philips screwdriver
- Pipe wrench
- 7/16” (11mm) wrench or nut driver
- Bottle clean brush with long handle







Step 1: Fill a bucket or container with 1 gallon (4 liters) of clean water - this will be required later to clean the quartz sleeve. A squeeze bottle is useful for applying water or cleaning solution to the inside of the quartz sleeve.

Step 2: Shutdown and unplug the unit.

Step 3: Shut off the water supply and relieve the pressure.

Step 4: Place another bucket under the unit and drain the unit completely (see *Draining the Unit* section). Note that piping connections to the inlet and outlet ports will have to be removed in order to disassemble the unit’s stainless manifolds. Perform these disconnections now.

Step 5: Open the UV Chamber as described in *Accessing UV Chamber* section. It may be necessary to have the UV chamber door held open for this procedure.

Step 6: Remove top plastic cover.

Step 7: Disconnect wires to wiper motor, purge valve, and water temperature sensor (thermistor).

Step 8: Remove the wiper motor by removing the two screws holding it to the plate.

Step 9: Remove the motor mounting plate from the top manifold by removing the two screws and nuts. Removing this plate will allow top manifold to come

free from the wire bundle.

Caution: Do not damage the sealing surfaces of the manifolds or the shaft adapter for the wiper - handle these parts with care to prevent water leaks. The wiper assembly must also be handled with care to prevent damage to cleaning edges. **The wiper blades are sharp, handle them with care.**

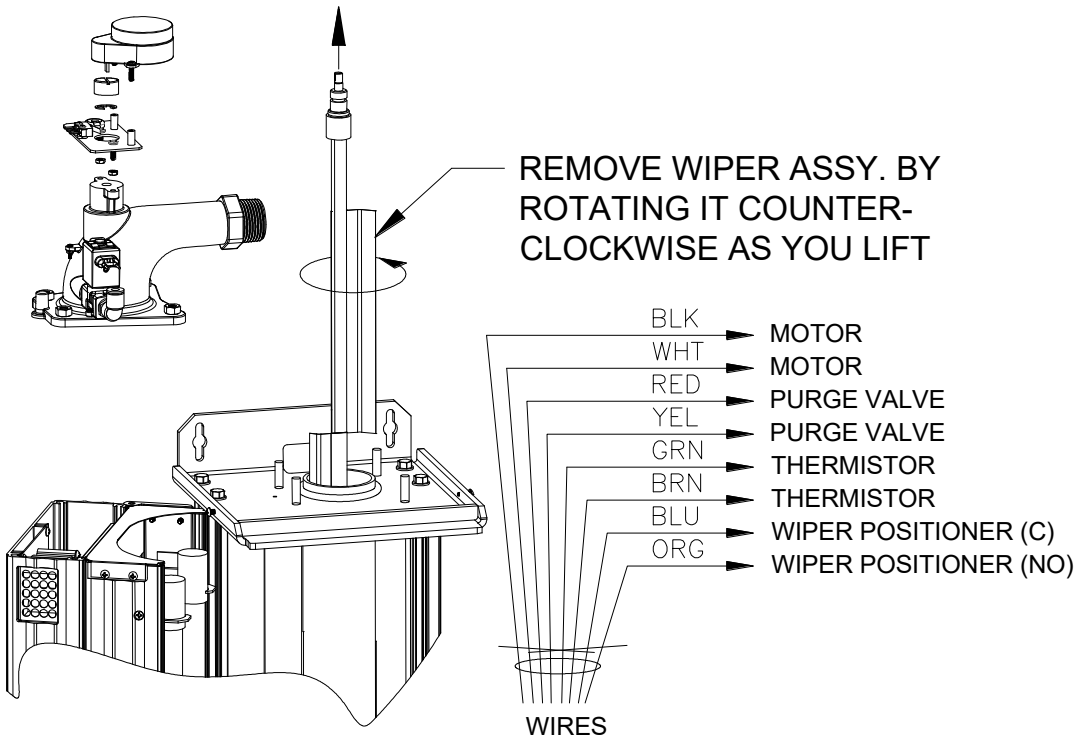

Figure 7.6

Step 10: Remove the retaining ring (E-ring) holding the wiper shaft.

Step 11: Use the 7/16” (11mm) wrench or nut driver to remove the four nuts of the top manifold in an alternating pattern (top left, bottom right, bottom left, then top right). The bottom manifold does not require removal to clean the quartz sleeve, so leave it in place. This will support the quartz sleeve during cleaning and simplify the overall process.

Step 12: Press down on the wiper shaft and remove the top manifold (Figure 7.6) by lifting it straight up to disengage the wiper shaft. The shaft adapter should remain on the top of the wiper shaft. Note the orientation of the slot to the wiper blades – the slot is aligned to the wiper blades.

Step 13: Remove the wiper assembly by carefully lifting it up and out of the quartz sleeve. Rotating it counter-clockwise as you lift will help. Prevent the shaft adapter from falling off the wiper assembly. Note that the shaft adapter sits on the top end of the wiper shaft - the top end of the shaft has a hole, the bottom end of the shaft does not.

Cleaning/Removing the Quartz Sleeve

Step 1: Use a bottle cleaning brush with a long handle to scrub the inside of the quartz sleeve. Scrub and flush it with water repeatedly to clean the quartz sleeve. Use a squeeze bottle to apply water or solution to the quartz sleeve to keep the area tidy. **Note: Keep the rest of the unit free from moisture.** Examine the quartz sleeve.

Step 2: If the quartz sleeve is still dirty, use a scale remover such as CLR or Lime Away and apply it to the inside of the quartz sleeve. Citric acid, available at a drug store, can also be used. **Always flush with clean water afterwards.**

Step 3: Once the quartz sleeve is clean, reassemble the unit (see Figure 7.8). Replace any seals that appear to have been damaged.

Step 4: If the quartz sleeve is still not clean, it requires replacement. This is done by removing the bottom manifold (see Figure 7.7). Replacing a quartz sleeve is easier when the unit is placed on a horizontal surface – removing the unit from the wall to work on a bench is recommended, especially for the Hallett 1000 models.

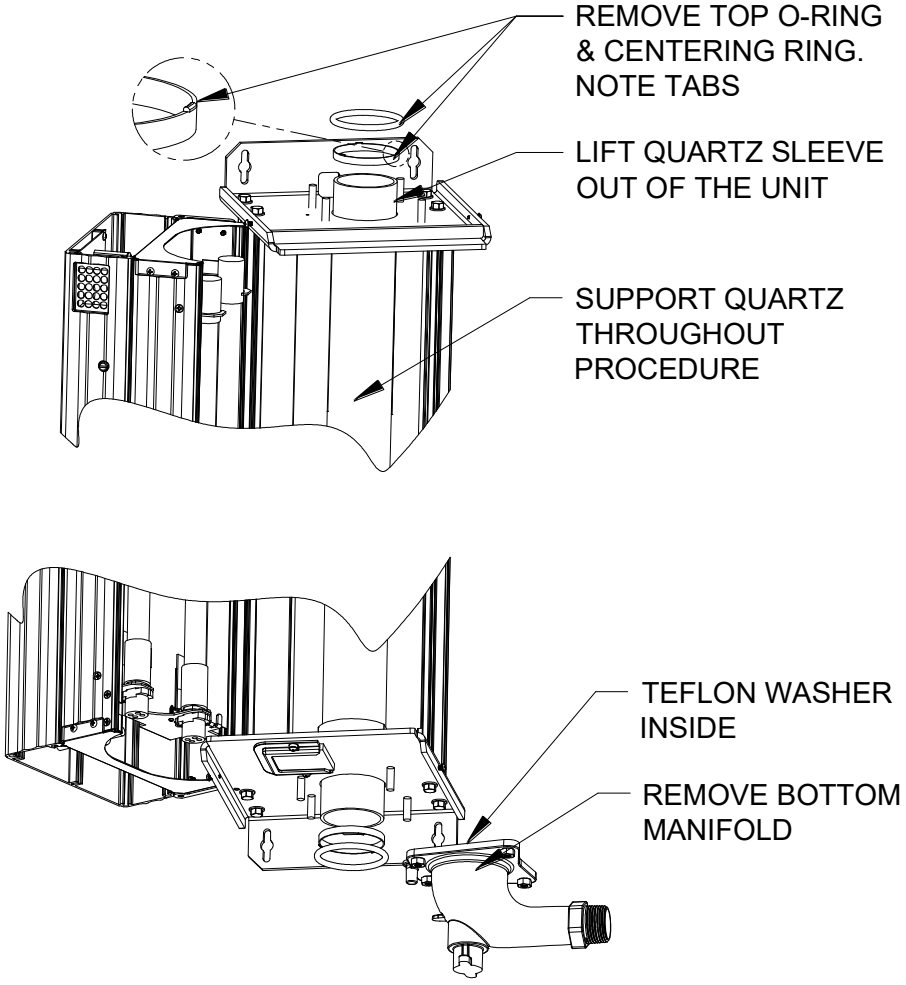

Figure 7.7

Step 5: Remove the bottom plastic cover and then the bottom manifold by undoing the four nuts in an alternating pattern (top left, bottom right, bottom left, then top right). Do not allow the Teflon washer at the lower cavity of the bottom manifold to fall out – the wiper shaft sits on this washer. Support the quartz sleeve as you remove this item.

Step 6: Remove the quartz sleeve by removing the top and bottom O rings and then the quartz centering rings. Lift the quartz sleeve out of the unit.

Step 7: Install the new quartz sleeve into the unit and center it vertically. **Be careful not to chip the ends.** Support the quartz sleeve for the next two actions.

Step 8: Install the quartz centering rings (small tabs face outwards) and then the top and bottom O rings, keeping the quartz sleeve centered vertically in the unit.

Step 9: Replace the bottom manifold (see Fig. 7.7) by installing the four nuts in an alternating pattern (top left, bottom right, bottom left, then top right). Check again for Teflon washer.

Reassembling the Unit

Step 1: Replace the wiper assembly carefully in the quartz sleeve -wetting the inside of the quartz sleeve with water will also make the task easier. Turn the wiper assembly counter-clockwise (looking from the top) as it is being inserted into the quartz sleeve – this will make the task easier and align the wiper blades properly. Ensure the bottom of the wiper is correctly seated into bottom manifold.

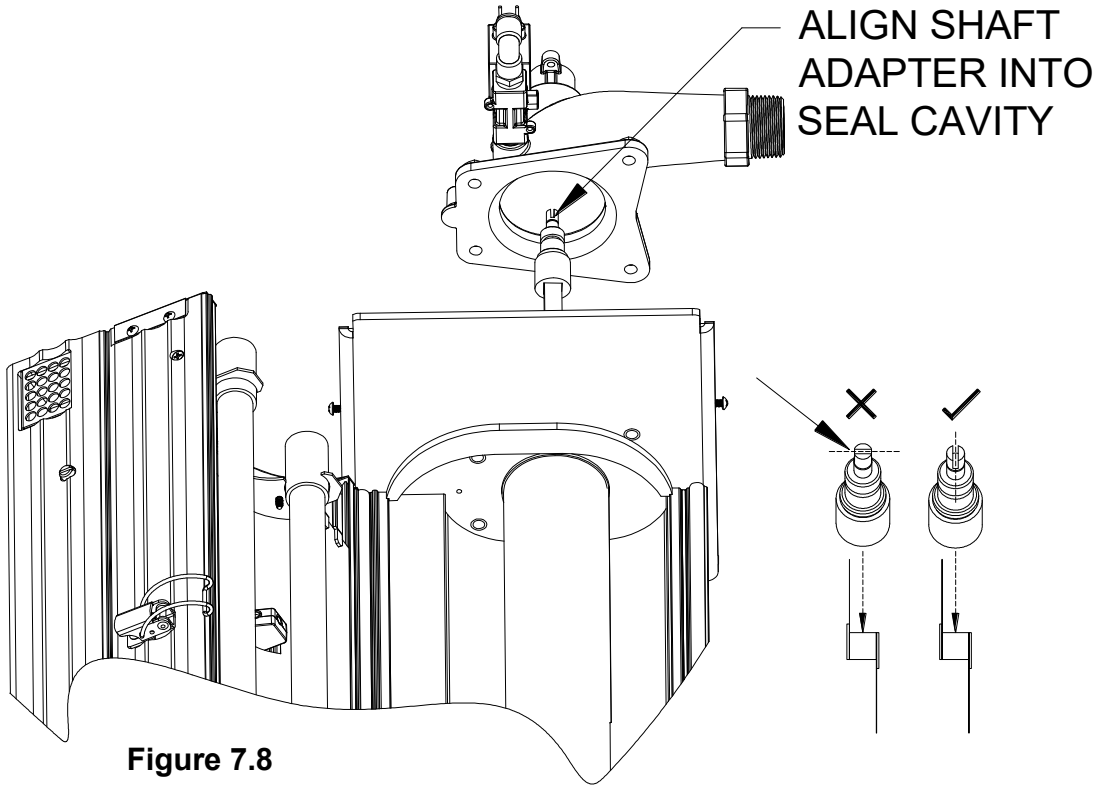

Figure 7.8

Step 2: Ensure the quartz O-ring seal is in place around the quartz sleeve and then replace the top manifold by aligning the shaft adapter into the seal cavity of the top manifold (see Figure 7.8).

Step 3: Tighten the nuts in an alternating pattern. Once top manifold is secure, replace the retaining ring on the wiper shaft. Rotate the wiper assembly CCW to have the top wiper blade facing the back of the unit.

Step 4: Reconnect both top and bottom piping connections. Close the UV Chamber door.

Step 5: Close any taps and slowly open the water supply. Inspect for leaks. Repair any leaks if necessary before plugging in the unit.

Step 6: Reinstall the motor mounting plate by using the trigger cam to center the plate (center hole to be concentric with wiper shaft). With the wiper blade opposite the UV sensor facing the back, the trigger cam should have the dimple in the 10 o'clock position. Install the wiper motor, then reconnect all the wires.

Step 7: Reinstall the top and bottom plastic covers.

Step 8: Plug in the unit. Check operation of wiper motor, purge valve and water temperature switch.

Step 9: Make an entry in the service record to establish a cleaning schedule.

Replacement Parts

Use only genuine parts from UV Pure Technologies when servicing your Hallett disinfection system. Failure to use genuine replacement parts will void the factory warranty, and any laboratory validation and/or certification for water safety and system operating performance. Figures 7.9A-B shows a complete list of original factory parts.

Replacement parts and service are available from your Installer, a Certified Service Dealer (CSD), or directly from UV Pure Technologies on our e-commerce site: www.uvpure.com . A complete list of Certified Service Dealers and their coverage areas is available on UV Pure's website: www.uvpure.com.

Manufactured by: **UV Pure Technologies Inc.**
455 Milner Avenue, Unit 1
Toronto, Ontario, Canada, M1B 2K4
416-208-9884, 1-888-407-9997
FAX 416-208-5808
e-mail inquires: info@uvpure.com www.uvpure.com

Date of Purchase:
Dealer Name:
Model:
Serial Number:
(S/N located on the left side of the front panel below power cord entry)

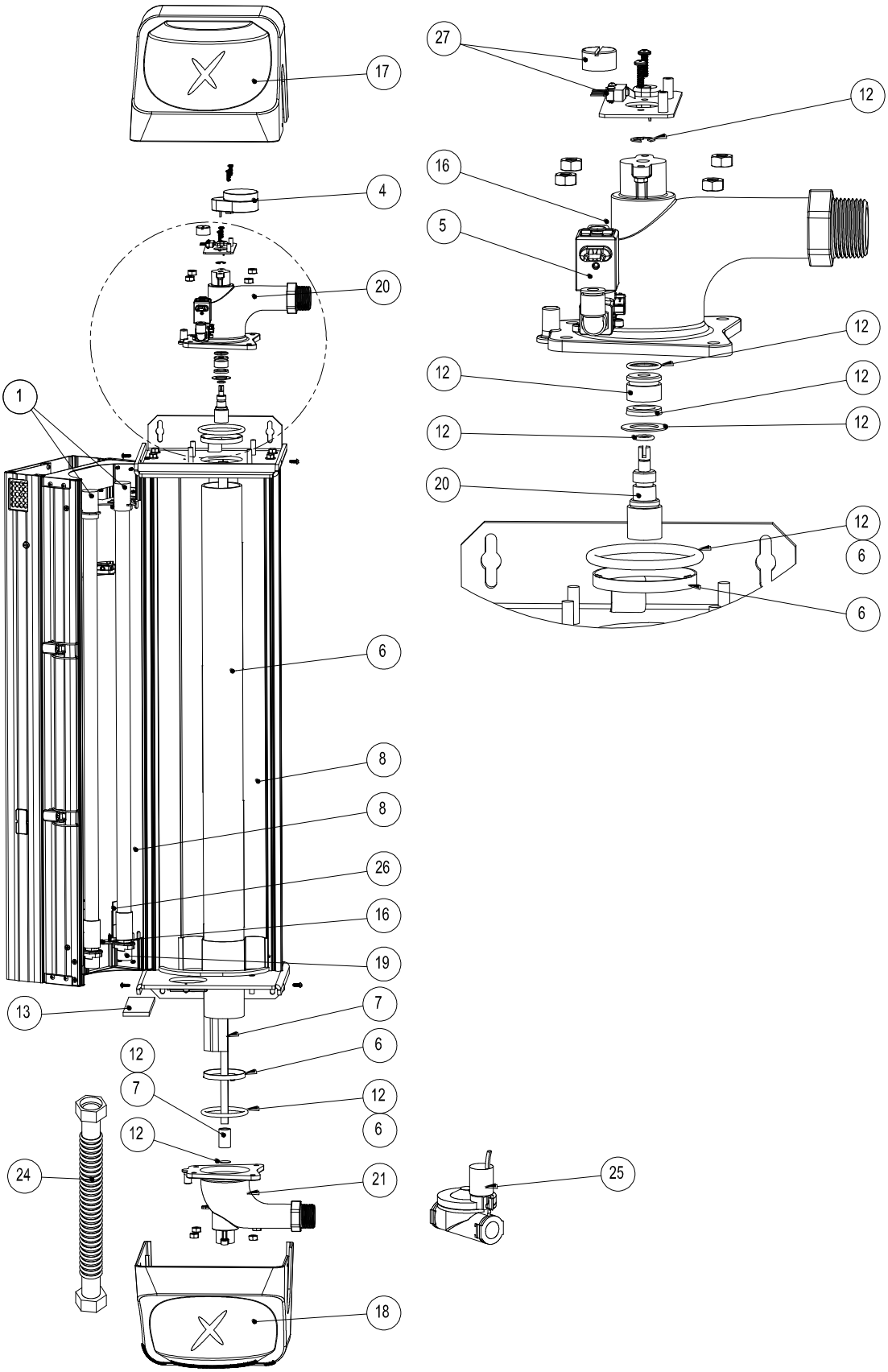
27
12
16
5
12
12
12
12
12
20
12
6
6
17
4
20
1
6
8
8
26
16
19
13
7
6
12
7
12
6
12
24
21
25
18

Figure 7.9A

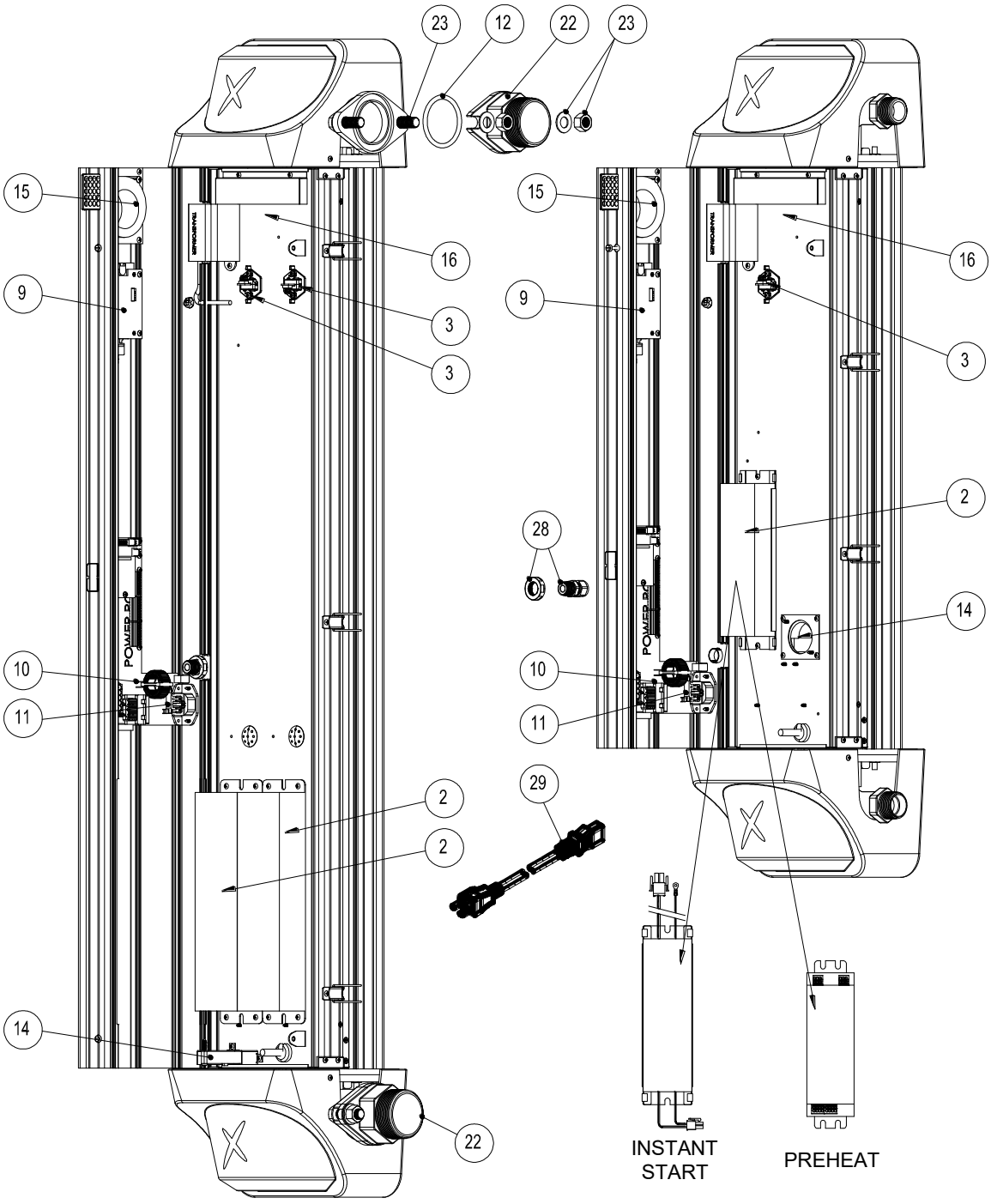

AMALGAM SYSTEM LPHO SYSTEM

Figure 7.9B

Hallett Spare Parts List

Item No.	Part Name	Model			
		Hallett 1000XX	Hallett 750XX	Hallett 500XX	Hallett 400XX
1	UV Lamps (Shipped in pairs)	**GC19**			
			C300065 (single lamp p/n is C300064)		
				E300210 (single lamp p/n is E300209)	
					E300165
2	Electronic Ballast	GD37 (2 per unit)	GD40 (for 120V instant start systems) (1 per unit) GD41 (for preheat & 230V systems) (1 per unit)		
3	UV Sensor Kit	GD1 (some units have 2 - see Product Spec. Table)			
4	Wiper Motor Kit	R400005			
5	Purge Valve Kit	H400000			
6	Quartz Sleeve Replacement Kit (includes 2 O rings)	GDQ-XL	GDQ-L	GDQ-M	GDQ-S
7	Wiper Assembly Kit	GDW-XL	GDW-L	GDW-M	GDW-S
8	Reflector Kit (shipped & sold in pairs)	GDR-XL	GDR-L	GDR-M	GDR-S
9	Circuit Board - LCD	Contact UV Pure			
10	Circuit Board – Power	GD3 (for 120V systems) GD3-230 (for 230V systems)			
11	Fuse Pack (5 pcs)	GD4 (for 120Vac systems, fuse is 6A, 250V 3AG) GD4-230 (for 230Vac systems, fuse is 3A, 250V 3AG)			
12	Seal Kit (complete)	GD5 (2" Port)	GD6 (1" port)		
13	Air Filter	GD7			
14	UV Chamber Blower Kit	GD8			
15	Circuit Board Blower Kit	GD9			
16	Temperature Sensor (Thermistor) Kit	GD10 (3 per unit)			
17	Top Plastic Cap	GD11			
18	Bottom Plastic Cap	GD12			
19	Lamp Socket Wire Harness	GD42 (2 per unit)	GD43 (for 120V instant start systems) (1 per unit) GD44 (for preheat & 230V systems) (2 per unit)		
20	Top SS Manifold/ Thermistor/Purge Valve Kit	GD13 (2 inch)	GD14 (1 inch)		
21	Bottom SS Manifold	GD15 (2 inch)	GD16 (1 inch)		
22	2" NPT Adapter (1 pc.)	GC25			
23	Fastener Kit for 2" Adapter (2 per unit)	GD22			
24	Optional Flexible SS Hose	GD17 (2" hose)	R400007 (1" hose)		
25	Optional Solenoid shut-off Valve – Nylon	550213	550229 (1" ports)		
	Optional Solenoid shut-off Valve – Brass		550195 (1"ports)		
26	Heaters for LPHO Lamps		GD18		
27	Wiper Position Switch Kit	GD19			

28	Optional Strain Relief Kit	GD21	
29	Power Cord	150013 - for 120V North America 150161 - for 230V Europe; 150135-for 230V Aus/NZ	
-	Purge Valve Relocation Kit	GE3	
-	10gpm Flow R. Kit		GD24
-	13.2gpm Flow R. Kit		GD25
-	15gpm Flow R. Kit		GD26
-	18.5gpm Flow R. Kit		GD27
-	20gpm Flow R. Kit		GD28
-	25gpm Flow R. Kit		GD29
-	26.4gpm Flow R. Kit		GD30

8. SERVICE RECORD SHEET

Record lamp replacement dates and events in the space provided below.

Date (MMM/DD/YYYY)	**Action**
	System Installed

9. UV PURE TECHNOLOGIES LIMITED WARRANTY

Limited Warranty for UV Pure Technologies'® water disinfection systems and peripheral parts purchased in Canada, the United States, Australia and New Zealand.

What this warranty covers:

Defects in materials and workmanship in Products and Parts manufactured by UV Pure Technologies Inc. (UV Pure) including Hallett® systems, and parts such as replacement UV lamps other original equipment manufacturer components such as manifolds or NEMA cabinets sold or certified by UV Pure Technologies Inc.

What the period of coverage is for UV Pure Products and Parts:

Five-year Limited Warranty for structural, hardware, and mechanical components. Specifically, this includes the following UV Pure Parts: system casing (machined and extruded aluminum parts, stainless steel parts, and plastic molded components), stainless steel manifolds, NEMA cabinets, welded steel skids and structural components, stainless steel self-cleaning mechanism, and mechanical fasteners.

Three-year Limited Warranty for electrical components, reflectors, and quartz sleeve. Specifically, this includes the following UV Pure Parts: wiper motor, air blowers, circuit boards, ballast and micro-processor with digital display, wiring harnesses, lamp sockets, reflectors, and quartz sleeves.

One-year Limited Warranty sensor probes and valves, Specifically this includes the following UV Pure Parts: UV sensors and the circuit board they are mounted in, temperature probes, and purge valves.

12-month Limited Warranty for all replacement LPHO lamps

16-month Limited Warranty for all replacement amalgam lamps

Ninety-day Limited Warranty or Balance of Original Warranty for replacement Parts or Products. Specifically this includes any UV Pure Parts or Products replaced or repaired under this Limited Warranty, and any Parts purchased for routine service or maintenance. This warranty period is for the balance of the original warranty or for 90 days from the date the Product or Part is repaired and/or returned to the first end-user whichever is longer. An exception is all replacement lamps that are covered for 12 or 16 months from date of replacement depending on lamp type.

Who is covered:

This Limited Warranty extends to you only if you are the FIRST END-USER PURCHASER and with respect to the ORIGINAL INSTALLATION; the **warranty period shall commence upon the Date of Purchase**.

What we will do to correct problems covered by this Limited Warranty:

During the warranty period, as set out above, UV Pure will repair or replace Products or Parts, at its sole discretion and cost, with the exception of shipping and handling charges. UV Pure may require that certain failed part be returned to UV Pure within 45 days for analysis and to facilitate continuous improvement; for example, circuit boards and sensors that fail must be returned to UV Pure. Replacement parts or systems may be functionally equivalent reconditioned/refurbished/pre-owned or new products or parts at UV Pure's sole discretion. UV Pure may provide software updates, at its discretion, but is under no obligation to do so. Based on an agreement between UV Pure and its service providers, Certified Service Dealers, this warranty will be honoured by either UV Pure or a Certified Service Dealer.

In North America, based on an agreement between UV Pure and its service providers, Certified Service Dealers, this warranty will be honoured by either UV Pure or a Certified Service Dealer.

Outside North America UV Pure has appointed Distributors that will honour this warranty and that provide service directly or via local Certified Service Dealers.

How to get help:

Call a Certified Service Dealer (CSD) or UV Pure's Customer Service toll free line: 1-888-407-9997. A complete list of Certified Service Dealers and their coverage areas is available on UV Pure's website: www.uvpure.com. Or, email UV Pure's Customer Service Center: info@uvpure.com.

What this Limited Warranty does NOT cover:

Maintain your original PROOF OF PURCHASE. UV Pure or its Certified Service Dealers reserve the right to deny warranty coverage if you cannot provide proof of original purchase including date of purchase, who you purchased the Product or Part from, and serial number.

USE OF REPLACEMENT UV LAMPS THAT ARE NOT ORIGINAL UV PURE EQUIPMENT WILL VOID THIS WARRANTY.

USE OF REPLACEMENT UV LAMPS THAT ARE NOT ORIGINAL UV PURE EQUIPMENT WILL INVALIDATE CERTIFICATION TO OR BY EPA, NSF, MENV, NWRI AND OTHER VALIDATION PROTOCOLS AND CERTIFYING BODIES.

All UV lamps lose power over their usable lifetime; original equipment UV Pure lamps are engineered and tested to ensure that all of our systems achieve the

minimum power for disinfection specified, at the end of lamp life. Lamps that are not made by, or that are not approved by UV Pure may not meet those same high standards. Of course UV Pure performs rigorous testing of its systems and original equipment components to its own high quality control standards, and external testing and certification protocols are performed with original equipment UV Pure lamps. NON-ORIGINAL EQUIPMENT UV LAMPS have not been approved by certifying bodies, thereby invalidating those tests and certifications. If you have a question as to whether UV Pure lamps are original equipment, please call our Toll Free Customer Service line at: 1-888-407-9997.

UV Pure may source and supply equipment that is manufactured and warrantied by other companies (the Original Equipment Manufacturer) and **offered as options** in conjunction with UV Pure's Products and Parts. For example: heaters or AC units used in NEMA cabinets, solenoid shut-off valves, stainless flexible hoses, filter housings and inserts, UPS power supplies, and on-line instrumentation or web-enabling communications equipment. **Warranties for those components are solely the responsibility of the Original Equipment Manufacturer, and NOT UV Pure.** UV Pure uses reasonable efforts to ensure that OEM options are of the highest quality possible and consistent with UV Pure's high standards.

UV Pure is not responsible for Parts or Products that are improperly installed, used and/or not maintained as set out in the Product Manual or as expressly advised by UV Pure. This Limited Warranty does not cover damage caused by accidents, acts of God, minor scratches or imperfections and normal wear and tear. This Limited Warranty is void if the Product is improperly installed, used in conditions that exceed UV Pure's specifications as set out in the Manual or Product Specifications, or if there is water damage due to improper installation or poorly or improperly tightened plumbing connections. This Limited Warranty is void if the Product or Parts have been altered or modified in any way by anyone other than a UV Pure technician or a Certified Service Dealer. Warranty coverage may be void if the Product is operated in combination with ancillary or peripheral equipment not approved by UV Pure for use with the Products.

This Limited Warranty excludes the cost of labour in removing and/or reinstalling any defective Product or Part. In the event that a Product is returned to UV Pure for repair or replacement under the terms of this Limited Warranty, the Product must be returned in its original shipping container and packaging. UV Pure will not be liable for damage to the Product during shipping otherwise.

UV Pure does not assume any liability for personal injury or property damage caused by the use or misuse of any Product or Part. UV Pure is not liable for special, incidental, indirect or consequential damages. UV Pure's liability is limited to repair or replacement of the defective Part or Product and this liability shall terminate upon the expiration of the applicable warranty period as set out above.

This Limited Warranty may be amended or changed at any time, at UV Pure's sole discretion, without notice.

UV Pure offers inspection and refurbishing for older systems.

To assist our customers, UV Pure's certified technicians can provide inspection, recommendations, cost estimates, and complete refurbishing of older systems that may be out of warranty.

TO THE EXTENT PERMITTED BY APPLICABLE CONSUMER PROTECTION LAWS, ANY WARRANTIES PROVIDED FOR HEREIN ARE IN LIEU OF ANY OTHER WARRANTY, AND ALL OTHER WARRANTIES ARE HEREBY DISCLAIMED, WHETHER EXPRESS OR IMPLIED.

10. NSF STATEMENT

The Hallett 500PN and Hallett 750PN systems are Tested and Certified by NSF International against NSF/ANSI Standard 55 for Disinfection Performance, Class A.

Who is the NSF? The NSF is the global gold standard accepted by environmental regulatory agents worldwide for water treatment and disinfection.

This Class A system conforms to NSF/ANSI 55 for the disinfection of microbiologically contaminated water that meets all other public health standards. This system is not intended to convert wastewater or raw sewage to drinking water. The system is intended to be installed on visually clear water.

NSF/ANSI 55 defines wastewater to include human and/or animal body waste, toilet paper, and any other material intended to be deposited in a receptacle designed to receive urine and/or feces (black waste); and other waste materials deposited in plumbing fixtures (grey waste).

If this system is used for the treatment of untreated surface waters or ground water under the direct influence of surface water, a device found to be in conformance for cyst reduction under the appropriate NSF/ANSI Standard shall be installed upstream of the system.

The information contained in this document is subject to change without notice. UV Pure Technologies Inc. shall not be liable for errors contained herein or for consequential damages from improper installation or operation of this unit.



UV Pure Technologies Inc.
455 Milner Ave., Unit 1
Toronto, Ontario
M1B 2K4
www.uvpure.com

Section 3.6

Sludge Handling

Section 3.6.1

Clarifier Sludge Pumps

Pumps
Business Unit

Operating and Maintenance Instructions



NETZSCH Canada, Incorporated
500 Welham Road
Barrie, Ontario L4N 8Z7
Tel: (705) 797-8426
Fax: (705) 797-8427
Toll: 866 683-7867

www.pumps.netzsch.com

WARNING!!!!

When **Variable Frequency Drives (VFD's)**
are being used to vary the speed of the
NETZSCH Progressing Cavity Pumps, then they
MUST be CONSTANT TORQUE VFD's.

How the pump works

NETZSCH Progressing Cavity Pumps operate at a constant torque requirement for a specific operating pressure. The speed of the pump does NOT affect the torque requirement. **For example:** a pump running at 60psi output pressure at a speed of 200 revolutions per minute requires the same toque input as if it were running at 60psi output pressure at a speed of 600 revolutions per minute. The only exception to this rule is during pump startup; at the moment the pump starts the motor must provide more torque than the pump requires when it is running. This is due to the force of static friction that the motor must overcome in order to begin rotation. Although this is only a momentary force, enough torque has to be available to break the static load.

How the VFD works

Variable Frequency Drives work by taking the supplied power and modulating the supplied power frequency in linear proportion to the supplied voltage. This proportional modulation allows the motors speed to be altered without the motor drawing too many amps and burning out. A VFD can be built to perform this modulation in one of two ways. The VFD can be set to modulate the frequency above the normal supplied 60HZ frequency allowing the output to provide a constant amount of power but the torque will drop off as speed is increased **(THIS IS A CONSTANT HP VFD**) or it can modulate the frequency below the normal supplied 60HZ frequency allowing the output to provide constant Torque but the power will decrease as the speed is reduced **(THIS IS A CONSTANT TORQUE VFD).** This relationship is shown in the detail below. The manufacturers of VFD's typically offer two service factors. Normal Duty; which

has an overload capacity of the VFD's full load ampere rating times 110% - 120% for one minute and Heavy Duty; which has an overload capacity of the VFD's full load ampere rating times 150% for one minute. Typically, constant Hp VFD's are sold with a Normal duty rating since the applications don't call for high starting torque which causes amp draw to spike. Constant torque VFD's are usually sold with heavy duty ratings so that they can supply elevated startup amp draws for high starting torque applications.

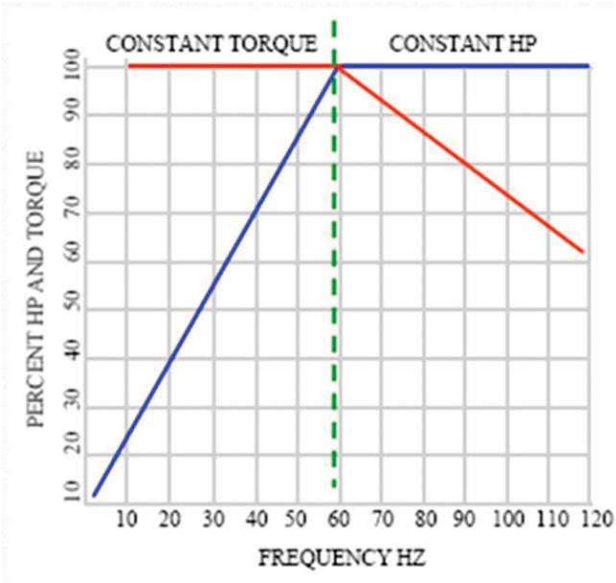

VFD Speed Torque Characteristics

Blue = Horsepower
Red = Torque
Green = Motor Nameplate Frequency (60 Hz)

In Constant Torque Area - VFD supplies rated motor nameplate voltage and motor develops full horsepower at 60 hertz base frequency.

In Constant Horsepower Area - VFD delivers motor nameplate rated voltage from 60 Hertz to 120 hertz (or drive maximum). Motor horse-power is constant in this range but motor torque is reduced as frequency increases.
Note: Motor HP = Torque x RPM

Application:

Because while running a progressing cavity pump the torque value required by the pump is fixed; any reduction in supplied torque as a result of operational speed could cause the pump to fail. Also, depending on the running speed required, a constant HP VFD may not be capable of supplying the torque needed for pump startup. This is the reason a **Constant Torque** VFD **MUST** be used to operate a progressing cavity pump.

	TABLE OF CONTENTS	PAGE 0.0

		Page
1	Safety Precautions	1.0
2	Description	2.0
3	Packing, Transportation, Storage	3.0
4	Installation Instructions	4.0
5	Start-up	5.0
6	Temporary Shutdown	6.0
7	Maintenance	7.0
8	Trouble-Shooting and Remedying	8.0
9	Dismantling and Assembly of the Pump Housing	9.0
10	Dismantling and Assembly of the Rotating Parts	10.0
11	Removal and Fitting of the Connecting Shaft	11.0
12	Dismantling and Assembly of the Shaft Sealing	12.0
13	Dismantling and Assembly of Special Units	13.0
14	Recommended Stock of Wear Parts	14.0
15	List of Spares and Sectional Drawing	15.0
16	List of After-Sales Service Centres	16.0

Remark: Because of data transfer the text sheet printouts of our operating instructions do not contain a personal signature.

1 Safety Instructions

This manual contains basic instructions which must be observed when installing, operating and servicing the machine / equipment. It is essential therefore for the user / installer or responsible technician to read the manual thoroughly prior to installation and operation.
A copy of the manual must always be at hand where the machine / equipment is being used. In addition to the general safety instructions listed in this main section on safety, it is necessary to observe the special safety rules included in other sections of the manual, eg. for private use.

1.1 Safety Signs

The signs below are printed in the manual as general hazard / danger symbols to mark those safety instructions whose non-observance can result in danger to personnel or to the machine / equipment. These signs are:



Hazard sign DIN 4844 - W9
Danger to general public

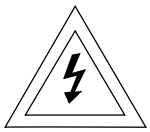

Hazard sign DIN 4844 - W8
Risk of electric shock

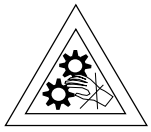

Risk of injury from machinery



Danger from suspended loads

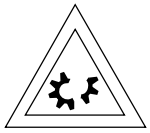

Damage to machinery



Risk of injury to your eyes: goggles required.

Continued Page 1.0R

Warning plates located directly on the pump/ equipment showing for example the correct direction of rotation or the fluid connections used must always be observed and kept completely legible.

1.2 Personnel Qualifications and Training

Operating, maintenance, inspection and installation staff must possess the correct qualifications for their work. Areas of responsibility, scope of authority and staff supervision must be exactly defined by the user. If personnel do not have the necessary knowledge they must receive due training and instruction. If necessary, the user of the machine / equipment can arrange for such training and instruction to be provided by the manufacturer / supplier. The user must also make sure that the content of the manual is fully understood by the staff concerned.

Responsibilites

All work on and operation of the pump/ equipment should be carried out by trained/ competent and qualified operators, tradesmen and / or engineers as appropriate.

Any person responsible for or in charge of

– **working with lifting gear** and ropes when moving a pump / equipment will have to be duly instructed prior to doing the transportation job;

– **mounting a drive** to a pump / equipment must be qualified / trained as an industrial mechanic / technician;

– **setting up installations into a plant** must be qualified / trained as an industrial mechanic/ technician and must be familiar with the design and functioning of the plant in which the pump / equipment is being installed;

– **doing work on starting up, operation and maintenance** must gain knowledge of the pump / equipment principle prior to performing such works and must study the safety instructions and the manual thoroughly;

– **doing repair works**, and prior to doing such works, must be trained and skilled in the job. He must have due knowledge of the pump/ equipments specific details set up in the repair instructions. Unskilled personnel must be trained and repair works checked.

1.3 Dangers arising from Non-Observance of the Safety Instructions

Non-observance of the safety instructions can result in danger to personnel as well as to the environment and the machine. Non-observance of the safety instructions can result in the loss of claims for compensation.

Non-observance of the safety instructions can have, for example, the following consequences:

▲ Failure of essential functions of the machine / equipment

▲ Failure of mandatory maintenance and servicing methods

Continued Page 1.1

- ▲ Danger to personnel from electricity, machinery and chemicals
- ▲ Danger to the environment from leakage of hazardous substances.

1.4 Safety Conscious Working

In addition to the safety instructions listed in the manual, it is essential to observe the national accident prevention directives currently in force and any of the users own internal regulations concerning work and safety.

1.5 Safety Instructions for the User / Operator

- ▲ If there is a risk of danger from any hot or cold machine component, the user must fit protective guards to prevent such components from being touched (according to Standard EN 563).
- ▲ Protective guards fitted to prevent contact with moving parts (eg. couplings) must be in position when the machine / equipment is in use.
- ▲ Leakages (eg. from a shaft seal) of hazardous materials (eg. explosive, toxic, hot material) must be discharged in such a way that neither personnel nor the environment are placed at risk. Legal directives must be observed.
- ▲ All possible danger from electricity must be eliminated (for details see eg. the regulations of your local power supply company).

1.6 Safety Instructions for Maintenance, Inspection and Installation

The user must ensure that all maintenance, inspection and installation work is carried out by authorized and qualified personnel who understand the operating instructions and are adequately trained.

Work on a pump / equipment must only be carried out with the machine stopped and electrical power supply turned off. The pump/ equipment must not be under any pressure and must have cooled off. All procedures detailed in these operating instructions on the stoppage of the machine must always be adhered to.

Pumps / equipment which convey harmful media must be decontaminated.

Immediately after the maintenance work is finished all safety devices and guards must be re-installed and the safety trips must be tested.

Before putting the machine back into operation the points detailed in section "Start-up" should be observed.

Continued Page 1.1R

1.7 Unauthorized Modifications and Manufacture of Spares

Modifications or changes to machines / equipment are only permissible with the manufacturer's agreement. Original spare parts and accessories authorized by the manufacturer ensure safety.
The use of other components revokes any liability for consequences which may result.

1.8 Improper Application

Delivered machinery / equipment is only guaranteed safe for the use specified.

This machine / equipment was designed in accordance with the prescribed conditions of use.
The limits of use are laid down in the conditions of use and should in no way be exceeded.

1.9 Specific Points for the Use of a NEMO® Pump

A NEMO® pump must be used for the **purpose only** for which it was sold.

If you change or wish to change the process medium, you must check with either the supplier or manufacturer that the pump is suitable for the new medium. This is especially important with aggressive, poisonous or otherwise hazardous substances.

Pump criteria include:

1. Compatibility with the medium
2. Suitability for seal design / material, especially the shaft seal
3. Resistance to pressure and temperature of the medium.

Please note that NEMO® pumps are progressing cavity pumps and as such can generate very high pressure.

A blockage or the chance closure of a valve in the discharge line can cause a pressure rise **manifold as high as can be tolerated by the installation**. This can result in the bursting of pipes, which must be avoided especially in the case of dangerous media.

Corresponding safety equipment must therefore be installed, for example an emergency stop button, a pressure relief valve with return pipe or a bursting disc.

During maintenance and repair work on the pump please note the following:

1. Ensure that the pump drive **can not** be turned on without authorization.
2. When opening the pump follow the instructions for handling the medium (eg. protective clothing, no smoking etc).
3. Before putting the pump back into operation ensure that all guards and other safety devices (eg. drive–belt protection, coupling protection) are properly re–installed.

Continued Page 1.2

1 SAFETY PRECAUTIONS

Always bear in mind your safety during operation, maintenance and installation of equipment. Please adhere to the EC-Directive for machinery including the national regulations and follow the US OSHA regulation #1910.219 & 1910.147 titled Mechanical Power transmission apparatus as well as the European Standard EN 292 with the accidents prevention rules laid down by the trade unions and other appropriate technical institutions.

Always bear in mind your safety during operation, maintenance and installation of equipment. Please adhere to the EC-Directive for Machinery including the national regulations and follow the European Standard EN 292 with the accident prevention rules laid down by the trade unions and other appropriate technical institutions.

Continued Page 1.2R

1.10 Notes on Inspection and Repair

The legal regulations for safety at work, such as regulations for the workplace, regulations governing dangerous materials, accident prevention, environmental protection eg. regulations on disposal and water balance obligate all commercial business to protect their employees and / or people and the environment from adverse effects caused by contact with dangerous materials.

Important:

Inspection / repair of machinery and its parts only takes place when a safety conformity certificate has been completed by an authorized and qualified specialist. Please use a copy and leave the original in the operation and maintenance manual.

Where special safety precautions are necessary in spite of careful emptying and cleaning of the machinery, the necessary information must be given.

Machinery operating with radio-active media will only be repaired or inspected by one of our specialist engineers under the safety of the owner.

The safety conformity certificate is part of the inspection / repair service. We reserve the right to refuse acceptance of this order / service for other reasons.

Continued Page 1.3

1.11 Instructions concerning explosion protection

The instructions below are to be considered and kept to when using pumps in potentially explosive areas in order to guarantee durable explosion protection of the pumps and avoid any danger of ignition.

In accordance with the regulations 94 / 9 / EC, the pumps are admitted for use in the area II 2G IIB T 4 or II 2G IIB T 3
(pls. see manufacturer's declaration or declaration of conformity).

It is to be taken into account that in case of aggregates the components (e.g. gears, couplings) mounted on the pumps must comply with the regulations 94 /9 / EC as well. The relevant documentation concerning these components is to be considered.
The application area of aggregates is determined by the application area of the mounted component with the lowest approval and thus may deviate from the allowed application area of the pump.

Temperature category	Max. temperature of the conveying product
T 4	100 °C
T 3	165 °C
T 2	265 °C
T 1	415 °C

The maximum conveying product temperatures apply when mechanical seals of Messrs. Burgmann with **carbide – carbide** and **carbide – carbon** as sliding material combinations are used.
In the case of other manufacturers or other sliding material combinations it is necessary to consult the manufacturer.

1. **Assembly and repair in potentially explosive areas**

   When performing assembly and repair work, it is to be seen to it that no dangers of ignition arise especially during heating up the pump parts. This means e.g. heating up by explosion-proof heating devices or exclusively in non-explosive areas. The temperature of the heated part and the ignition temperature of the materials by which the danger of explosion may be caused are to be considered.

2. **Dry-running protection**

   Under no circumstances is the pump to run dry.
   The pump is to be equipped with an appropriate dry-running protection device.

Continued Page 1.3R

The device for dry-running protection should be self-regulating.
This means that this device can give alarm signals and/or switch off the pump also in case of failures in its own control system.

Dry-running protection concerning stationary immersion pumps (with mounting plate)

Operation is only permitted with redundant or self-regulating automatic devices to guarantee dry-running protection as well as to control the pump capacity.

Dry-running protection concerning movable immersion pumps (drum pumps)

The filling with liquid during the operation is to be ensured by specific requirements of behavior:

- Drum pumps may only be introduced in and removed from the container in switched-off condition
- Drum pumps, after being introduced in the container to be discharged, may only be started after they have immerged in the fluid.
- Drum pumps are to be switched off before they run dry or are to be switched off at once when specific noises ("slurping" or speed rise) suggest that dry running may or will immediately occur.

3. **Overpressure protection**

   The pump must not be loaded over the maximum allowable pressure.
   The pump is to be equipped with an appropriate overpressure protection device. The pump must not convey against a closed slide valve.
   The overpressure protection device should be self-regulating.

4. **Drives**

   The drives must be adjusted to the performance of each pump.
   In the case of a blocking of the pump, the drives must be turned off automatically by means of a motor protection unit.

5. **Alignment of the drive (concerning the pump types SY / SH / SA / SO / SF / SP)**

   It is absolutely necessary that the drive be aligned within the maximum allowable tolerances. Incorrect alignment causes damage to the seals and the shaft bearings.

6. **Potential equalization concerning immersion pumps**

   The immersion pumps are to be integrated in the potential equalization of the installation. Hand-operated movable immersion pumps are to be grounded before being introduced in the container.

Continued Page 1.4

The connection to ground is to be maintained until the pump has been completely pulled out of the container.
There must not be any potential difference between the pump and a conductive container. This means that container and pump are to be connected at a common grounding point and thus be conductively connected with each other.
(see information brochure "Statische Elektrizität, Zündgefahren und Schutzmaßnahmen" (Static electricity, dangers of ignition and preventive measures); Publisher: "Internationale Sektion für die Verhütung von Arbeitsunfällen und Berufskrankheiten in der chemischen Industrie der IVSS" (International section for the prevention of employment accidents and occupational diseases in the chemical industry of the ISSA (International Social Security Association)) , Heidelberg 1995).
The hand-operated movable immersion pumps are to be provided with an indication referring to the grounding measure (pay attention to grounding).

7. **Potential equalization concerning all other pump types (no immersion pumps)**

   All conductive parts of the pump are to be integrated in the potential equalization of the pumping set unless the conductive connection to the ground potential is guaranteed by the drive or connecting shafts or otherwise.

8. **Stator**

   The stator is to be regularly checked for wear. When the allowable wear limit is reached, the stator is to be replaced. Before exchanging the conveying product, the pump operator has to consult the manufacturer concerning the durability of the stator unless the stator has already been confirmed for the intended application.

   Inspection and maintenance interval of the stator:
   - **in the case of an operating time of > 16 h/day, at least twice a year**
   - **in the case of an operating time of < 16 h/day, at least once a year.**

9. **Joints / joint lubrication**

   The sealing and the lubrication of the joints are to be regularly checked. If necessary, the seals and the lubricants are to be replaced.

   Inspection and maintenance interval of the joints:
   - **in the case of an operating time of > 16 h/day, at least twice a year**
   - **in the case of an operating time of < 16 h/day, at least once a year.**

10. **Inspection after initial startup**

    The aspects relevant for ensuring the explosion protection (such as lubrication and wear check) are to be checked six months after the initial startup of the pump at the latest.

Continued Page 1.4R

11. **Shaft bearings**
(concerning the pump types SY / SH / SA / SO / SF / SP)

Replacement of the bearings after 14,500 operating hours (according to prEN 13463-5: replacement after 90 % of the designated service life).

12. **Materials**

Although being allowed as material for the pumps, aluminum should be avoided in potentially explosive areas.
The pumps may only be used if, under the particular operating conditions, the materials are resistant to mechanical and/or chemical influences or corrosion such that the explosion protection will be maintained.

13. **Noise development**
(concerning the pump types SO / BO / SF / BF / SP / BP)

As soon as unusual noises (such as knocking or rubbing) are realized, the pump is to be switched off. The cause of the failure is to be eliminated before the pump is reoperated.
Regular check of the paddle equipment.

14. **Direction of flow of immersion pumps**

The direction of flow of immersion pumps always has to be from the end connection piece to the pressure nozzle at the top. The reverse direction of flow is not allowed.

15. **Mechanical seal of immersion pumps**

Before the initial startup and after a prolonged shutdown, the mechanical seal is to be lubricated from outside before the pump is started. In this connection, the compatibility of the lubricant with the sealing material is to be considered.

16. **Impurities in immersion pumps**

Especially in the case of hand-operated movable immersion pumps it is to be seen to it that no impurities can get into the pump. The pumps are to be deposited only on clean and solid ground or else to be suspended. In case of unusual noises or power losses, the immersion pumps are to be switched off immediately.

17. **Gland**

If a gland packing is applied it has to be observed that the permitted temperature corresponding to the temperature category is not exceeded. Recommendation: fasten the screws of the stuffing box gland only with low torque (approx. 5 Nm).

Continued Page 1.5

Safety Conformity Certificate

The machinery and its accessories together with this safety conformity certificate relating to repair / inspection services given to the undersigned by ourselves

Machine Type .....
Number .....
Delivery Date ..... Delivery Note No. .....

was carefully emptied and cleaned both inside and out in preparation for shipment
☐ yes
☐ no

Special safety precautions with regard to health or media endangered by water are to be implemented
☐ necessary
☐ unnecessary

The machinery is set up to transport materials dangerous to health or water and came in contact with media containing harmful substances
☐ yes
☐ no

The following safety precautions are necessary with regard to irrigation media, overflow liquid and waste management:

.....

.....

We confirm that the above mentioned details are correct and complete and that despatch will follow in accordance with the legal requirements:

Company ..... Telephone .....
..... Fax .....
..... Telex .....

Address

.....

.....

Name ..... Position .....

....
Date Company Stamp / Signature

2 Description

The NEMO® pump is a progressing cavity pump.
The main components which determine the system discovered by Professor René Moineau are a rotating part, called the rotor and a static part, called the stator.
The rotor is a helical screw with an extremely large pitch, large thread depth and small centre diameter with round cross-section for 1/2-geometry and elliptical cross-section for 2/3-geometry. The stator has a two start or resp. 3 start thread and is double or resp. 1.5 the pitch length of the rotor. This provides space for the medium between the rotor and stator. When the rotor turns round inside the stator the medium moves continuously from the inlet to the outlet.

The universal NEMO® pump system unifies many positive characteristics of other pump types:

- Like centrifugal pumps NEMO® pumps have no suction or pressure valves, but do have a stable flow rate in proportion to the number of revolutions.
- Like piston pumps NEMO® pumps have a suction capability of up to 8.5 m vacuum metric.
- Like membrane and peristaltic pumps the NEMO® pump can transport every type of inhomogenous, gaseous and abrasive media, as well as those that are not of a liquid consistency or contain solids and/or fibrous material.
- Like gear pumps and screw pumps the NEMO® pump is capable of coping with high medium viscosities.
- Like piston, membrane, gear or screw pumps the NEMO® pump can perform dosing operations.

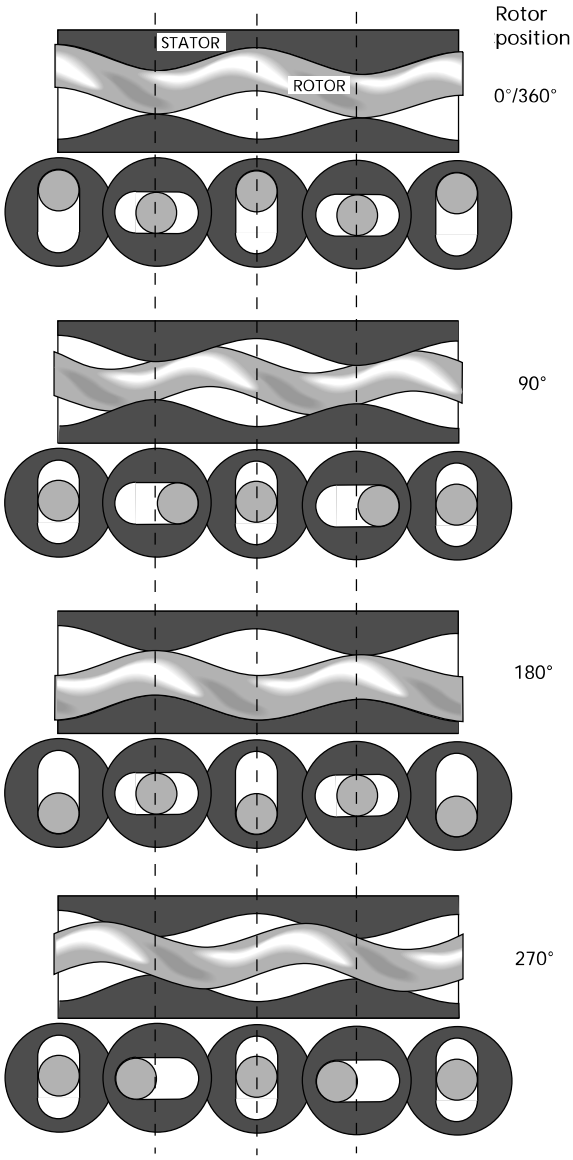

Length and cross-sections through the rotor and stator with 1/2-geometry during a rotation.

Continued Page 2.0R

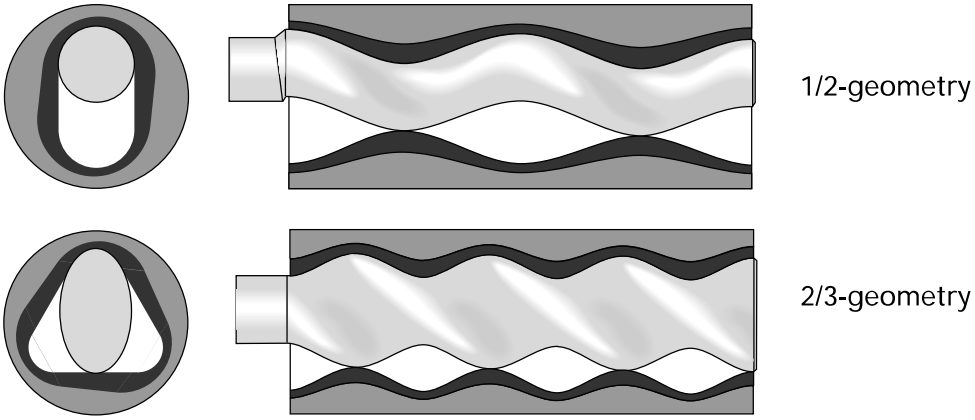

Length and cross-sections through the stator with rotor
with reduced stator wall thickness

2.2 General Data

Noise emissions:

The maximum permitted noise emission level at a work place is 70 dB (A).

The noise level was measured in accordance with DIN Standard 45635-24-01-KL2 to assure that the pump does not exceed 70 dB (A).

Noises generated by the drive and pipes are not included in the above emission value.

A prerequisite for the noise emission level of ≤ 70 dB (A) is that the pump is operated in a cavity free regime and is bolted to a concrete base.

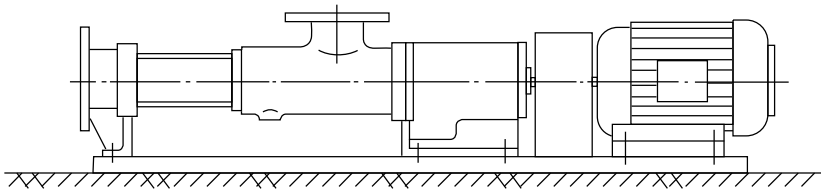

3 Packaging, Transportation, Storage

3.1 Packaging and Transportation

NEMO® pumps are shipped in railroad containers or crates unless the customer specifies otherwise.
The packings are labelled and symbols give the handling instructions in accordance with DIN 55402.
On receipt check for any transport damages.
Transport damages should be reported to the transporter immediately.
The pumps should be transported as closely as possible to the location of installation and only there should they be uncrated.

Uncrated horizontal pumps should be lifted by using a shackle which can be attached to the baseplate. The bolt holes of the frame or the lifting lugs attached to the baseplate could be used as shown on the installation drawing.

Vertical pumps should be lifted by using the bolt down holes, lifting lugs or shackles attached to the baseplate. This is shown on the installation drawing. For most applications, the drive is mounted on top of the pump.



Be careful when lifting top heavy pumps. The centre of gravity may be above the points where the lifting gear is attached to. If the case, secure additionally against tipping over!

Vertical pumps should not be deposited unless they are secured vertically. **Hazards of tipping!** Deposit only in horizontal position!



It is essential to avoid that the total pump unit be suspended with eye bolts of the motor or gear box. These eye bolts should be used for lifting the motor and/or the gear box **only.**

The Accident Prevention Rules, Section 18.4 relating to lifting accessories for the lifting of loads (VBG 9a) must be strictly adhered to.

Because of the variety of possible pump designs and applications, only general instructions can be given here. These should be good enough for experienced assemblymen or transportation experts.
When in doubt, please ask for detailed information on the pump unit concerned.

Continued Page 3.0R

When moving the pump or unit on **wheels** strictly attend to the following:

- Pad lock the motor drive and secure against unintended starting up.
- Move the pump unit carefully and slowly, especially where the ground is uneven. **Hazards of tipping!**
- Ensure a stable position of the pump or unit at the operating/storage place and secure it by actuating **all** clamping devices on **all** the wheels or rollers against voluntary moving away.
- Where fitted loosely, carefully watch the pipe bends when pumping. **Power of repulsion!**
- Where necessary, secure the pump unit additionally with support blocks.

3.2 Storage

The pumps are preserved for transport unless specified otherwise.
In cases of longer storage the pumps should be handled as follows until installation:

- **Stator:**

If the pump is not to be used immediately, then the elastomer along the contact line between rotor and stator may become permanently distorted (compression-set). This will increase the break away torque. Therefore, the stator should be removed and kept separately in a clean, cool and dry environment.
Standard DIN 7716 summarizes detailed information on the storage of rubber products, some of which is gathered here, and the following notice applies to a storage for a period of up to six months.

General

Most of the rubber products may change their physical properties under unfavourable conditions or if treated improperly, which will result in a shorter lifetime.
Or they may become useless through excessive hardening, aging, regenerating or permanent deformation, also because of blistering, cracking or other damages appearing on the surfaces.
The changes may occur under the influence of oxygen, ozone, heat, light, humidity, solvents or because of storing the products under tension.
If stored and treated properly, the rubber products will keep their properties, even over a long period of time (some years), almost unchanged.
This does, however, not apply to uncured rubber compounds.

Continued Page 3.1

Store room

The environment in which rubber products are being kept must be cool, dry, free of dust and rather airy, and they must not be stored in the open, not even in a weather sheltered space.
Rubber products should be kept in surroundings not having less than minus 10 °C and not more than plus 15 °C.
Store rooms should not be damp, and it must be ensured that there will be no condensation.
Most favourable is an environment offering a relative humidity under 65 %.
Rubber products must be protected against light, particularly direct sunlight or artificial light when having a high UV portion.
They should furthermore be kept away from ventilation, especially draught, by wrapping them up.
As ozone is very aggressive and harmful there should be no store room used which houses equipment likely to produce ozone, e.g. electric motors or other equipment which might bring about sparks or other electrical discharges.
There must be no solvents, oil, grease, lubricants or any chemicals kept in a store room.

- **Rotor**

  Please support with wooden blocks and cover up against harm from mechanical impact.
  For rotors of RCC (material number 1.2436):
  coat the surfaces with protective grease to avoid rusting.

- **Shaft Sealing by packing gland**

  Remove the gland and coat the exposed shaft surface with grease.

- **Pump parts in stainless steel**

  No grease coating necessary.

- **Other, non-coated pump parts**

  Protect with grease.

- **Drives**

  Please observe the drive supplier's instructions.

4 Mounting and Installation

If the NEMO® pump was stored and the rotor grease protected: Remove the grease before installing the stator. Clean the rotor thoroughly in order to avoid unsuitability of the grease with the stator material and the pumping medium.

Screw the pump at all fixing points (bearing housing / drive stool, end stud, support feet) using all fixing bores securely down to the sub-structure (ground plate, machine frame, foundation etc.).

4.1 Direction of Rotation

The direction of rotation of the pump is given on the model plate and in the order confirmation. The direction of delivery of the NEMO® pump is a function of the direction of rotation.

Changes must be agreed upon and confirmed by the supplier.

4.2 Pressure

If not explicitly confirmed otherwise in the order confirmation, the **maximum permissible pressure (e.g. when turning clockwise) inside the pump housing (A)**

– for models with pump housing of cast iron 6 bar

– for models with welded pump housing 10 bar.

The maximum permissible pressures inside the end flange (B) is a function of the design applied for connections

- with flange: maximum nominal pressure (e.g. PN 16)
- with threaded internal socket: maximum 25 bar
- with DIN 11851 "dairy" thread up to DN 100 for one or two stage pumps: max. 12 bar, for multi stage pumps: max. 25 bar
- for other versions: maximum permissible pressure of the socket connection, but not more than 6 bar per pump stage, depending on the stator installed.

4.3 Piping System

- Arrange suction and pressure pipes so that when the pump is not running, the medium is still present before and after the pump. Sufficient media should remain inside in order to lubricate the pump during restart.

Continued Page 4.0R

4 INSTALLATION INSTRUCTIONS

■ The installation of a removable distance piece between the end flange (B) and the pipe work is recommended in order to make the dismantling of the stator easy. The distance piece (see sketch) needs to have a minimum "ABL" disassembly length the values of which are shown in the table below, depending on the pump size and the number of stages.

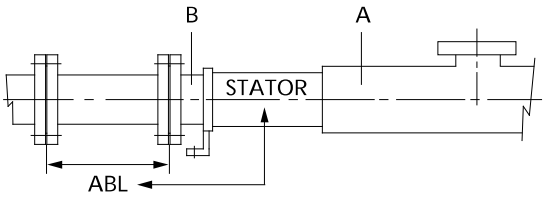

Disassembly length ABL in mm:

Pump size	Number of stages			
	1 *)	2	3	4
0 1 5	90	160	230	310
0 2 1	130	230	340	450
0 3 1	170	310	450	590
0 3 8	230	430	630	830
0 4 5	270	500	730	960
0 5 3	320	600	880	1170
0 6 3	370	690	1010	1330
0 7 6	420	800	1170	1540
0 9 0	500	950	1390	1840
1 0 5	630	1180	1740	-
1 2 5	740	1400	-	-

*) for one stage pumps with L or P geometry the ABL values of 2 stage pumps are valid

Continued Page 4.1

Type key

Example: NM 090 BY 02 S 12 B

- Internal
- **Pump size**
- Type
- Model
- **Number of stages**
- Geometry
- max. permissible pressure difference
- anti–clockwise
- Joint

The disassembly length "ABL" is also shown in the arrangement drawings in accordance with our Standard QSH V - TB 01 - 002.

- Clean the pipe work and rinse thoroughly before installing the pump.
- Connect the pipe work ensuring that no external stress attacks the pump body. The installation of compensators between the pump and the pipework is recommended:
  - No risk of damage to the pump housing from pipelines "resting" on the pump.
  - No risk of damage to the pump housing through vibrating pipelines.
- The twisting loads (F_x, F_y, F_z) and bending loads (M_x, M_y, M_z) permitted to be put on the suction/discharge flange comply with the requirements of API 676 and exceed the requirements of EN ISO 14847. They are shown in the table below.

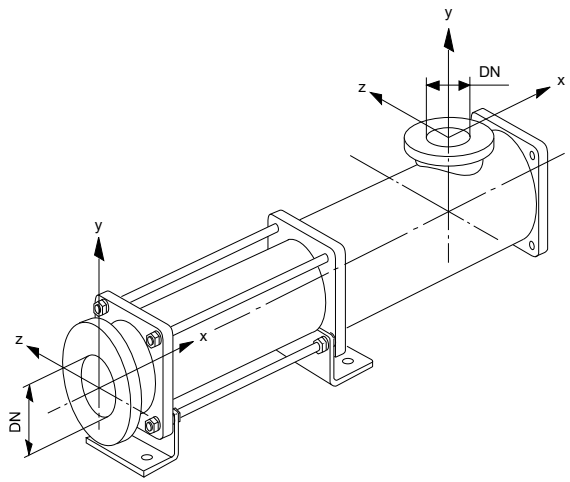

Continued Page 4.1R

Pump type NM	Standard nominal diameter DN	F_x, F_y, F_z N	M_x, M_y, M_z Nm	
015 021	(32) G 1¼"	550	(300)	Screwed joints must not be charged with loads which may result in tightening or loosening these joints
31	50	780	420	
38	65	990	530	
45 53	80	1160	620	
63	100	1490	800	
76	125	1820	980	
90 105	150	2190	1180	
125	200	2850	1530	

4.4 Shaft Sealing

- Where applicable, ensure that adequate supply lines for the buffer, flushing or quenching fluid for the shaft seals are connected **before** the pump is put into **operation**.
  For more details see Section 7.4!

4.5 Electrical Connection



All work relating to electricity shall only be made by **authorized and qualified personnel** and it should be in compliance with the requirements of the relevant national regulations!

In particular for control systems should the latest version of the **EC-Directive for Machinery 98/37/EEC, Annex I, Section 1.2 Controls** be carefully observed!

Note for frequency converter operation:
It is absolutely necessary to connect the PTC-resistors of the drive in case of frequency converter operation to protect the drive against overheating.

5 Start-up

The NEMO® pump design requires strict attention to the following:



Never run the NEMO® pump dry!
A few rotations in dry condition
will damage the stator!

- Before starting up for the first time, fill the pump with medium.
  In the case of high viscosity media fill with a liquid.
  Pump priming is vital to ensure lubrication of the rubber stator.
  Fill the piping on the pump suction side.
  In anti–clockwise rotation only: Fill the pump housing.

The NEMO® pump is a progressing cavity pump which can produce pressures that may cause the bursting of vessels or pipes.



The power transmission train (shaft, coupling rod, joints, rotor) of the pump may be overloaded thus resulting in damage or breakage.

Also the pump housing parts with their connections may be overloaded and break. There is a table in Section 4 of these Maintenance and Operating Instructions showing the pressure resistance of the pump housing parts.



Never run the pump against a closed inlet or outlet valve!

- **Open valves and vents before starting the pump!**
- **Check the direction of rotation by briefly switching on the pump motor.**

DETERMINING WHEN TO LOCKOUT

Having performed a hazard analysis on your company's equipment, you can now determine when machines must be locked out – i.e., when employees are exposed to injury from each (or any) of a machine's hazardous energy sources during servicing or maintenance activities. To do this, use your Hazard Analysis Checklist and the "Four Key Questions for Lockout Implementation."

OSHA Requirements

OSHA rules state that equipment must be locked out during equipment servicing and maintenance whenever employees are exposed to injury from unintentional machine movement or startup. According to OSHA's regulations, servicing or maintenance procedures that require lockout include:

"Workplace activities such as construction, installing, setting up, inspecting, modifying, and maintaining and/or servicing machines or equipment. These activities include lubrication, cleaning, or un-jamming of machines or equipment and making adjustments or tool changes, where the employee may be exposed to the unexpected energization or startup of the equipment or release of hazardous energy."

In addition, lockout is required during any machine service or maintenance that requires an employee to:

- Remove or bypass a safety device; or
- Place any part of his or her body into a point of operation or similar danger zone during a machine's operating cycle.

Routine, Repetitive Activities

Routing and repetitive servicing procedures that take place during normal production operations, such as minor tool changes and adjustments, do not require lockout tagout, as long as the work is performed using "alternative measures which provide effective protection." These "alternative measures" include safeguarding methods approved by OSHA and ANSI (American Standards Institute) to protect operators, such as:

- Presence sensing devices
- Interlocking barrier guards

Remember, the factor that determines whether these or any other safeguarding methods eliminate the need for lockout tagout during routine, repetitive activities is whether the employee is protected from injury.

If lockout is not required, you MUST have clearly written procedure that describe the alternative safeguarding measures used and the tasks that may be performed. Refer to OSHA and ANSI standards for approved safeguarding methods.

6 Temporary Shutdown

- After stopping the pump empty and if necessary rinse it if



  - the medium might freeze due to the temperature surrounding the pump. Especially where there is a danger of frost if the pump is installed outside a building
  - the medium tends to solidify or harden
  - the medium tends to glue up the shaft seal.

- Stator:

  When stored for a long period, the elastomer along the contact line between the rotor and stator may become permanently distorted (compression-set).
  This will increase the break away torque. For this reason, the stator should be removed (please observe Section 9!), and stored in a cool, dry place in air tight package to give protection against light and air.

- Rotor:

  Remove **ceramic rotors** (please observe Section 10!) and store away, safe in the original packing.

  Support **other rotors** on wooden blocks and cover to protect them from mechanical damage, after the stator has been removed.

  Rotors made of RCC (material number 1.2436):
  Protect the rotor surfaces against corrosion with protective grease.



  Remove the grease before re–installing the stator and clean the rotor thoroughly in order to avoid unsuitability of the grease with the pumping medium or the stator material.

- Stand-by pump:

  A stand-by pump is sometimes used as a back-up for the main pump and, when standing idle for longer periods, should be operated from time to time. The pump may otherwise become seized when being started up. This is due to compression set i.e. distortion of the stator against the surface of the rotor.

7 Maintenance

7.1 Pumps in General

- The pumps should be regularly rinsed or cleaned if deposits of medium are likely to build up (sedimentation).





If the pump needs to be opened to do this, ensure that the pump and motor are switched off and cannot be turned on accidently (eg. by removing the fuse).

Periodical standstill to allow for cleaning during operation depends on the medium and type of operation.

- The pump can be cleaned:

  - through the cleaning ports provided in the pump housing
  - manually by dismantling the pump
  - automatically (CIP cleaning) for special housings with a flushing section (important instructions for CIP procedures are given in Section 5 (START UP).

7.2 Lubrication

The NEMO® pump does not require frequent lubrication.

- Maintenance of the drive should be carried out according to the drive manufacturers instructions.

- Maintenance
  - where no manufacturers instructions are available and
  - when normal conditions of use exist:

  - Strip down the drive unit
  - Remove the bearings
  - Clean all parts
  - Renew the lubricant

  every 5000 operating hours or at least every two years.



Special lubricants are often specified for mechanically controlled variable speed drives.
It is therefore important to follow the drive manufacturers maintenance instructions.

7.3 Lubricating the Pin Joints with SM-Pin Joint Seals

- It is advisable to change the oil and check the seals of the pin joints:
  - when renewing worn joint parts
  - when opening the pump for any reason.

  The quantity of oil added per pin joint is a function of the joint external diameter D:

Joint external diameter D in mm (see sketch)	Basic joint size	Quantity of oil per joint in cm^3
28	NM 015	1,5
30	NM 021	2
40	NM 031	5
54	NM 038	15
65	NM 045	22
76	NM 053	36
83	NM 063	78
102	NM 076	165
125	NM 090	205
148	NM 105	450
162	NM 125	470
Journal cross joint 175	NM125	1650

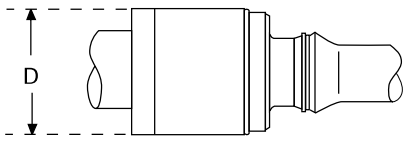

Pin joint

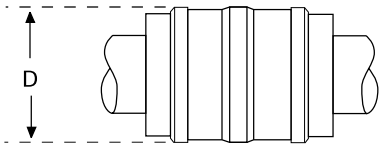

Journal cross joint

Continued Page 7.2R

Lubricating Oil:

Industrial application	Designation DIN 51502	Permitted Product
Food and Beverage Industry only	Authorized for use in foodstuffs — CLP HC 460	"KLÜBER" KLÜBEROIL 4 UH 1 - 460 authorized under USDA H1



This synthetic oil meets both the German "Arzneimittelbuch" requirements and the still stricter US American FDA regulations.
Nevertheless, it is not quite harmless if swallowed in more than minor quantities!

At a sudden break in a joint up to 450 ml of lubricating oil together with metal rubbings may enter the pumping medium. It is therefore of essential importance to regularly check the state of the joint seals and renew in time, if necessary.

If the pin joints operate without lubricating oil or seals, there will be no risk of contaminating the medium with oil. This operation, however, results in a higher amount of rubbed off metal parts through wear on the joints. These metal rubbings will inevitably and continuously come into contact with the pumping medium.

General Industry	CLP 460	"SHELL" Omala 460
	with SM-pin joint seal (8235) of EPDM CLP PG 320	prescribed: KLÜBERSYNTH GH 6-320

7.5 Shaft Sealing through Single Mechanical Seal

There are various constructions of mechanical seals. Especially advantageous is the use of standard mechanical seals according to DIN 24960. These seals have regardless of their brand the same fitting dimensions which makes them interchangeable. Mechanical seals with a coil spring can only be used for pumps which are run in one direction of rotation.

- The seal specification of a NEMO® pump is recorded on the order confirmation sheet.
- Pumps fitted with direction dependent seals should **never** be run in the opposite direction of the rotation arrow.
- If excessive leakages occur the spring tension and the seal surfaces should be checked, and the seal be replaced, if necessary.

Single mechanical seals usually work without any additional equipment. Their application range can be increased by operating them with a rinsing or cooling system.

a) **Quench**, in accordance with ISO 5199, Appendix E, Plan Nos. 08, 09, 10 or 13 or API 610, Appendix D, Plan No. 62.

Quench is the designation commonly used in sealing engineering for an arrangement that applies a non pressurized external fluid to the atmospheric side of a mechanical seal. The quench is used when

- a single mechanical seal will not work or only to a limited extent without auxiliary measures or
- a double mechanical seal with pressurized buffer fluid is not necessary.

Recommended for the following applications:

- Low temperature (danger of freezing)
- Operation in a vacuum (dry running)
- Media which must be isolated from the atmosphere (eg. due to build up of solid deposits or because of less severe damage to the environment, like smell).

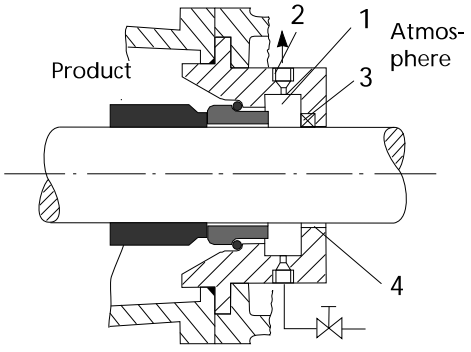

Continued Page 7.5R

Leakages will be transportet away by the quenching liquid.
In vacuum operation dry running of the seals is avoided.



No pressure higher than that of the pumped medium **in front** of the mechanical seal is allowed to build up in the quenching area (1) **behind** the mechanical seal. Otherwise the counter ring will be pushed out of the housing. **Free discharge** from (2) is necessary!

Closing off the quenching area from the atmosphere can be done in three ways:

1. In the case that high emission levels can be tolerated:
   Through a throttle bush (4). Cooling liquid not permanently used, only released from time to time.
2. In the case that medium emission levels can be tolerated:
   By a radial shaft seal ring (3). Permanent radial shaft seal lubrication through quenching liquid is necessary.

b) **Top lubrication**

Attention: For vertically installed pumps with overhead drive as type NT:

On initial start-up the mechanical seal has not come in contact with the medium. It runs therefore dry for a short period of time until the air is displaced from the pump housing.

- On first start–up and if stood idle for longer periods lubricate the mechanical seal before switching on the pump.
- Apply water, glycerine or oil depending on their compatibility with the pumping medium and the elastomer of the mechanical seal.
- Fill the quench cup of the mechanical seal housing.

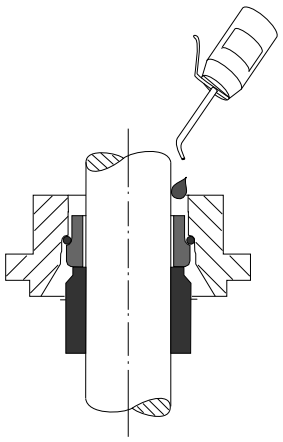

8 Trouble-Shooting and Remedying

8.1 Trouble Chart

The chart overleaf lists possible problems

- the type
- the likely reason / cause
- the remedy.

- A problem may have various causes: Several boxes in the vertical column are marked with a cross.
- A reason/cause may result in various problems:
  Several boxes in the horizontal column are marked with a cross.

8.2 How do you trace the kind of problem to find the possible cause ?

- The column describing a possible problem shows one or several boxes marked with a cross.
- On the corresponding lines you will find the possible reasons/cause and some hints how to handle the problem .
  Thus the actual cause of the problem can be narrowed down and eventually detected.
- If you find further cross-marked boxes on one of the lines and should there appear corresponding problems as well, then the likely cause of the problem has been detected.

- The table helps in finding the root of the problem and will give you the remedy if it is straight forward. For more complicated problems the manufacturer has to be consulted.

Continued Page 8.0R

The NEMO®-pump is a well established product which was thoroughly tested before leaving the factory. If you use the pump in keeping with your Order Specification and treat it in accordance with our Operating and Maintenance Instructions, it will run satisfactorily for a long period of time.

Possible Problems											
The pump is no longer starting	The pump is no longer sucking	The pumped medium is too little	The pressure is too low	The pumped medium is unstable	The pump is running loudly	The pump is stuck	The drive is overloaded	The stator life time is too short	The rotor life time is too short	The shaft seal is leaking	**Possible Causes** (Remedy overleaf)
X							X				In new pumps or stators : the static friction is too great.
X		X	X				X				The pump electrical equipment is not compatible with the electrical supply.
		X					X	X	X		The pressure is too high.
X						X	X				There are foreign bodies in the pump.
X						X	X	X	X		The temperature of the liquid medium is too high, the stator is too ductile.
X						X	X	X			The stator has swollen, the elastomer is not compatible with the medium.
X						X	X	X			The solids content of the medium is too high and leads to blockages.
X						X	X	X	X	X	The liquid medium sediments or hardens when left to stand.
		X	X	X							There is air in the suction pipe.
	X	X	X	X							The suction pipe is leaking.
	X	X	X	X							The shaft seal is leaking.
		X	X								The rpm is too low.
	X	X	X								With reduced diameter rotors : operating temperature has not been reached.
		X	X	X	X			X	X		The suction is too great or pressure too low (cavitation).
		X	X		X	X	X	X			The pump is running dry.
	X	X	X		X						The stator is worn out, or temperature of liquid is too low.
	X	X	X		X			X	X		The stator material is brittle.
	X	X	X		X			X			The rotor is worn out.
					X						The joints are worn out.
					X						The pump and drive are not axially aligned.
					X						The elastic element of the coupling is worn out.
					X					X	The roller bearings are destroyed.
							X				The rpm is too high.
							X				The viscosity is too high.
							X				The specific weight of the medium is too high.
							X			X	The stuffing box is incorrectly tightened.
										X	The packing is not suited to the liquid medium.
	X									X	Mechanical seal : rotation is incorrect.
										X	Mechanical seal : mechanical seal and mating ring have failed.
										X	Mechanical seal : elastomers damaged, swollen or brittle.

Remedy
Fill the pump up, then pump through manually using a suitable appliance; if necessary use glycerine as lubricant in the stator.
Check order information. Examine electrical installation (possibly 2 phase operation).
Measure the pressure with a manometer and check against order details. Reduce the pressure or change the drive.
Remove foreign bodies and eliminate possible damage.
If the liquid medium temperature cannot be lowered, use a reduced diameter rotor.
Check whether the liquid medium agrees with the order requirements. Possibly change stator material..
Increase the liquid part of the medium.
Clean the pump and rinse through after each run.
Increase the suction liquid level, prevent turbulance and air bubbles at the inlet.
Check seals and tighten pipe connections.
Stuffing box : tighten or renew. Mechanical seal : renew seals, eliminate solid deposits.
In the case of adjustable drives : increase the rpm. If necessary change the drive.
Warm up the pump (stator) to operating temperature first of all.
Decrease suction resistance, lower the temperature of the liquid medium, install the pump at a lower location.
Fill up the pump, provide for dry running protection, move the pipes.
Replace with a new stator or ensure correct liquid temperature.
Fit a new stator. Check the liquid medium agrees with order details; if necessary change the stator material.
Change rotor, establish the cause. Wear and tear, corrosion, cavitation; if necessary change to a different material or coating.
Replace relevant parts, carefully reseal and lubricate.
Re-align the unit.
Use a new connection and re-align the pump.
Replace roller bearings, lubricate, reseal. At higher temperatures observe the lubricant and the bearings.
In the case of adjustable drives : lower the rpm.
Measure the viscosity and compare with order details. If necessary adjust viscosity or change the drive.
Measure specific weight and compare with order details. If necessary adjust specific weight or change the drive.
Service stuffing box according to page 7.4, if necessary renew worn shaft.
Replace fitted packing with another packing type.
Change electrical connection.
Replace relevant rings with new ones.
Replace elastomers. Check whether the liquid medium agrees with order details, if necessary change material.

9 Removal and Fitting of End Stud, Stator and Pump Housing



The pump with attached pipework should be empty and must have cooled off!
Disconnect the pipework on the suction side and pressure side of the pump.

Caution for pumps with ceramic rotors!



Where a pump is fitted with a **ceramic** rotor (1999) the following operations should be carried out **with great care.**
Do not use any force or sharp tools! Special care must be taken to prevent heavy strokes, vibrations or impact by a hammer.

Dismantling

- Remove the securing screws (S) from support feet (2035) to baseplate (G).

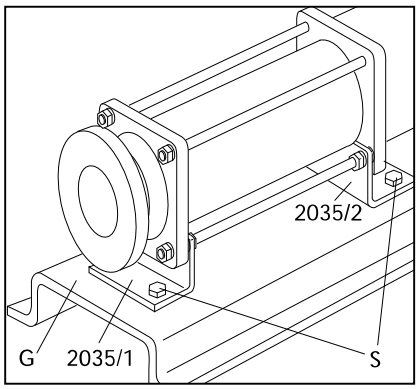

- Unscrew the hex nuts A (3020) and remove with spring washers (3015), then withdraw the end stud (2005) and first support foot (2035/1) with washers (3070).

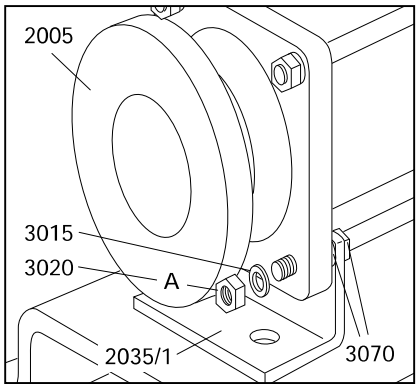

Continued Page 9.0R

9 DISMANTLING AND ASSEMBLY OF THE PUMP HOUSING

- Support pump housing (2010) and stator (3005) with wooden blocks.
- Loosen the hex nuts B (3020), where fitted, and remove the thru bolts (3010).

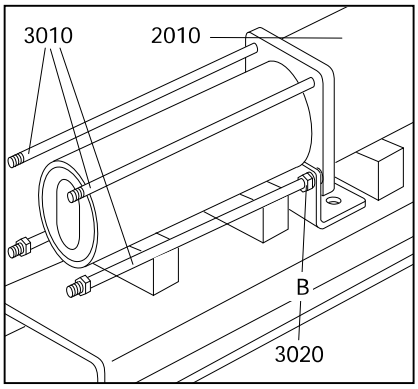

- Where fitted, remove the second support foot (2035/2) and the washers (3070).

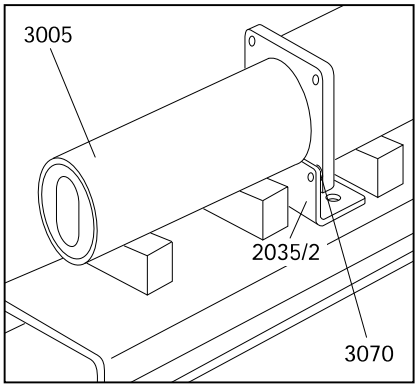

Caution for pumps with ceramic rotors!

When the stator (3005) is removed from the **ceramic** rotor (1999), the stator must be supported to prevent it from suddenly tilting away downwards. The same applies to the rotor (1999) as soon as it is disengaged from the stator (3005). Removing the stator (3005) from the **ceramic** rotor (1999) is easier by using an extractor. This should be done slowly and with care in a rotating movement. When sliding pump housing (2010) over **ceramic** rotor (1999), both coupling rod (1998) and rotor (1999) should be lifted as the **ceramic** rotor (1999) must not knock onto the pump housing (2010).

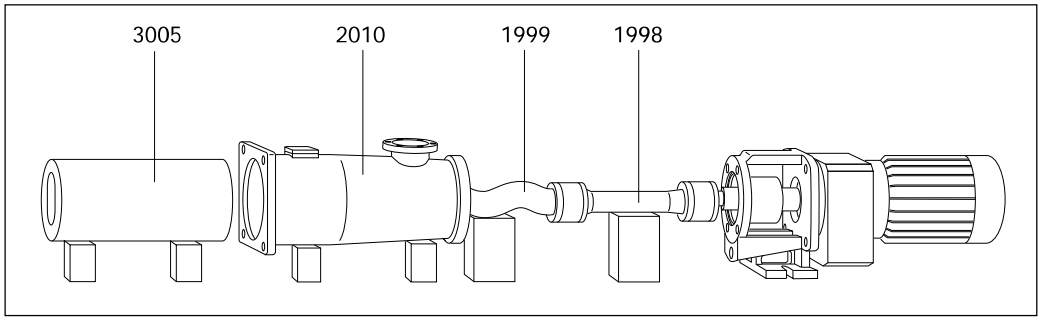

Continued Page 9.1

Caution for pumps with tubular rotors:

Where the walls of tubular rotors are worn in the wear zones, pumping medium may occur inside the rotor and may come out when pulling off the stator.
Ensure that protective measures have been taken when pumping dangerous media!

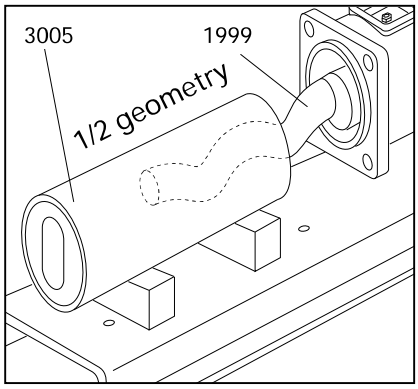

- Pull the stator (3005) out forward.
  A stator extractor can be supplied as special accessory.

- Remove the hex nuts (2030) with spring washers (2025).
- Pull the pump housing (2010) off forward.

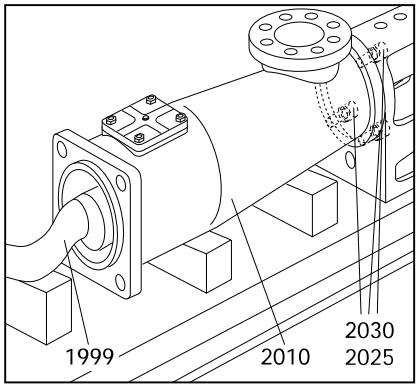

Assembly

- Refitting is a simple reversal of this procedure.

  When refitting the stator (3005) check direction of stator (3005) is correct! The funnel-shaped inflow side (E) of the stator (3005) must show to
  - the pump housing (2010) when rotation is **anti-clockwise**
  - the end stud (2005) when rotation is **clockwise**

  when viewed on pump shaft end.

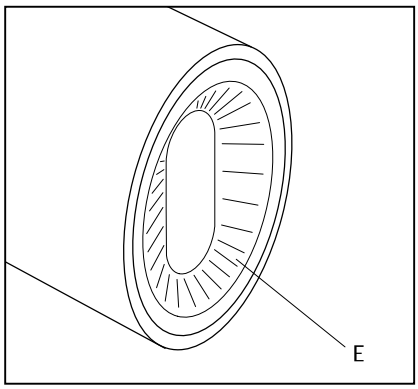

- **Elastomer stators (A)** have integrated front side sealing profiles (D). They don't need additional gaskets for sealing off the end stud (2005) and the pump housing (2010).

- **Solid stators (B)** have **no** integrated front side sealing profiles. Therefore additional gaskets (8005) should be installed to seal off the end stud (2005) as well as the pump housing (2010).

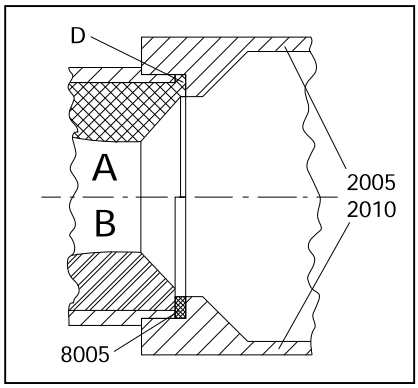

Continued Page 9.1R

9 DISMANTLING AND ASSEMBLY OF THE PUMP HOUSING



Be careful when engaging the stator (3005) and rotor (1999). Do not trap your fingers!
Do not reach inside the stator!

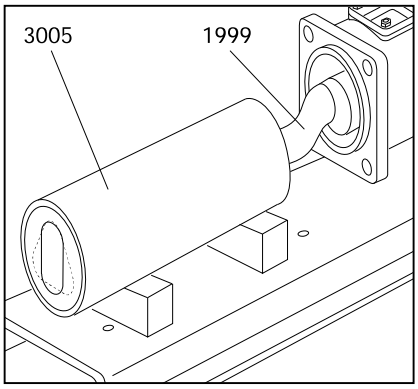

- Push the stator (3005) with a rotating movement on to rotor (1999).
  Apply an assembly device and some glycerine to ease engaging the stator (3005) and rotor (1999).

- When tightening hex nuts (2030) a gap will remain between drive stool (0085) and pump housing (2010).



Please do not try to close this gap by overtightening the nuts!
Drive stool (0085) may break!

Torque values for hex nuts (2030):

Size	M6	M8	M10	M12	M16	M20	M24	M30
Required torque Nm	8	15	30	45	75	80	100	120

- Fastening the end stud (2005):

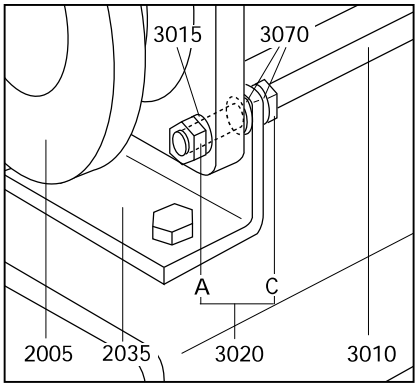

Screw the hex nuts C (3020) down into the thru bolts (3010) as far as possible.
Slip on the first washers (3070), the support foot (2035), the second washers (3070), the end stud (2005) and tighten with spring washers (3015) and hex nuts A (3020).
Finally, fasten the support foot (2035) from behind with the two hex nuts C (3020).

Ensure during refitting that the O-ring (8015) or, where a heating jacket (3025) is installed, the O-rings (8030) are in perfect condition and will sit correctly.



Ensure that the drain plug (2015) is not screwed too tightly into the pump housing (2010), since otherwise its conical thread may break the pump housing (2010).
The torque should be about 40 - 50 Nm.

10 Dismantling and Assembly of the Rotating Parts with Pin Joints with SM-Pin Joint Seal (basic joint size NM015 - NM125)

10.1 Removal of Rotor and Coupling Rod

Where a pump is fitted with a **ceramic** rotor (1999) the following operations should be carried out **with great care.** Do not use any force or sharp tools! Special care must be taken to prevent heavy strokes, vibrations or impact by a hammer.
For removal of the rotor (1999) and coupling rod (1998) the pin joints should be dismantled as follows:

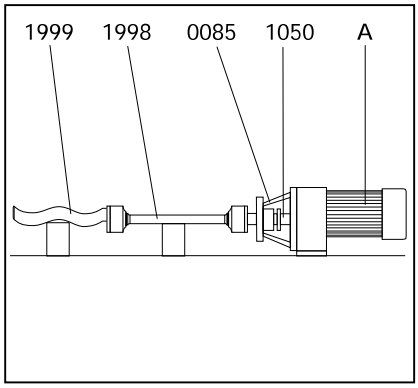

- Place the dismantled unit – consisting of drive stool (0085) with drive (A) and connecting shaft (1050), coupling rod (1998) and rotor (1999) – on the work-bench with a wooden block supporting the rotor (1999).

Basic joint size NM125:

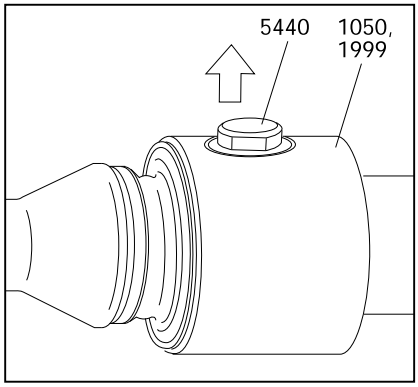

- Unscrew the wear sleeves (5440) from the head of rotor (1999) or connecting shaft (1050)

Basic joint size NM021 - NM105:

- Push circlip (5065) out of its groove and slip off over the head of rotor (1999 or connecting shaft (1050).

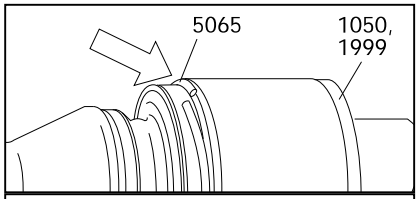

Pumps fitted with a ceramic rotor (1999):

- **Carefully** turn safety sleeve (5115) with a squeeze belt wrench, and remove.

The following method should **not** be employed for pumps fitted with a **ceramic** rotor.

Pumps fitted with a metallic rotor (1999):

- If necessary hit the edge of sleeve (5115) at an angle with the help of a wooden block and a plastic hammer. Taking care not to damage the O-rings (8060)!

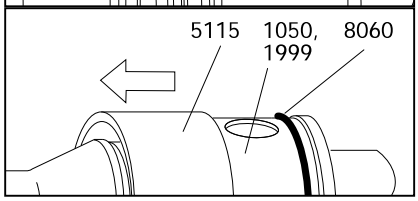

Continued Page 10.0R

10 DISMANTLING AND ASSEMBLY OF THE ROTATING PARTS

Basic joint size NM021 - NM125:

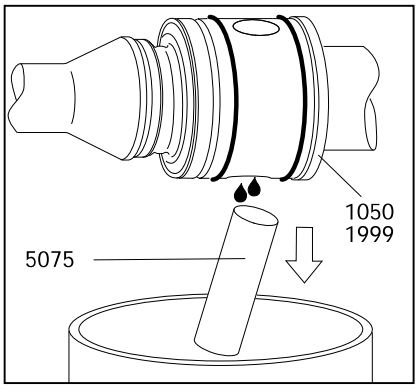

- Press the pin (5075) out of the head of rotor (1999) or connecting shaft (1050). If necessary use a hammer and a thin cylindrical pin (DIN 6450 C).
  Drain the oil into a receptacle.

  Caution for pumps with ceramic rotors!

  Where a pin (5075) may not come out easily, the metallic head of rotor (1999) should be supported on wooden blocks. Then the pin (5075) can be driven out with the help of a pin punch (DIN 6450 C). This should be done **with care**, holding the **ceramic** rotor with your hands.
  Please dispose of this oil in the proper manner.

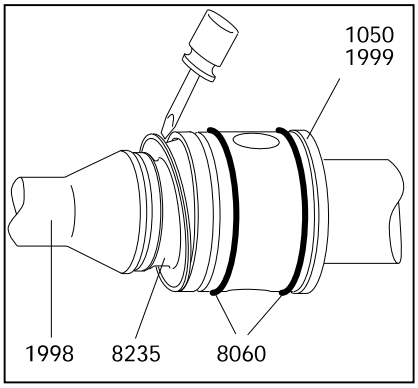

- Using a screwdriver, carefully lever the SM-pin joint seal (8235) out of the head of rotor (1999) or connecting shaft (1050).



Taking care not to damage the SM-pin joint seal (8235)!

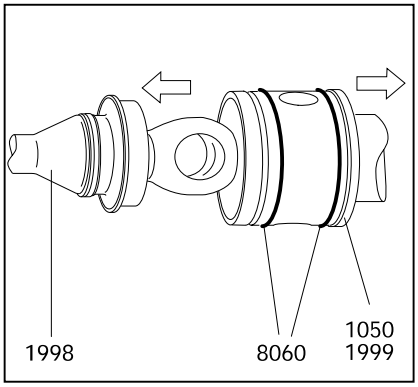

- Pull apart the rotor (1999)/ coupling rod (1998) / connecting shaft (1050) assembly. Remove the O-rings (8060).

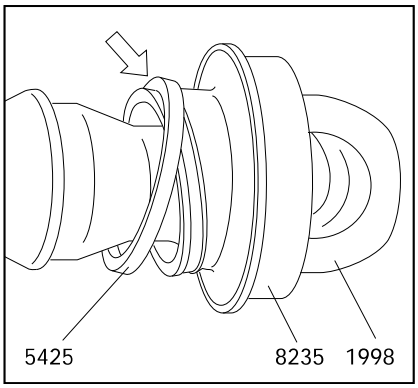

- Push the SM-pin joint seal (8235) towards the head of coupling rod (1998). In the narrow coupling rod section press the clamp ring (5425) out of the groove of the seal. Then slip the SM-pin joint seal (8235) and clamp ring (5425) off over the head of the coupling rod (1998).

Continued Page 10.1

10.2 Fitting the Rotor and Coupling Rod

For fitting the rotor (1999) with coupling rod (1998), the two pin joints should be assembled as follows:

- Slip the clamp ring (5425) over the head of coupling rod (1998).

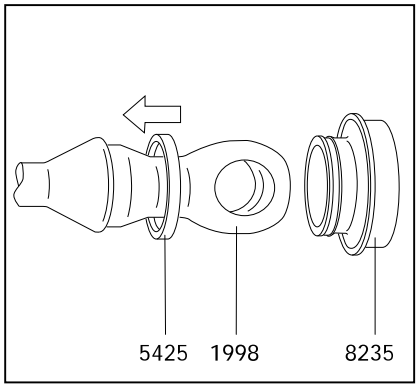

- Push the SM-pin joint seal (8235) over the head of coupling rod (1998) towards its narrow section, there sqeezing the clamp ring (5425) into the groove of the SM-pin joint seal (8235).

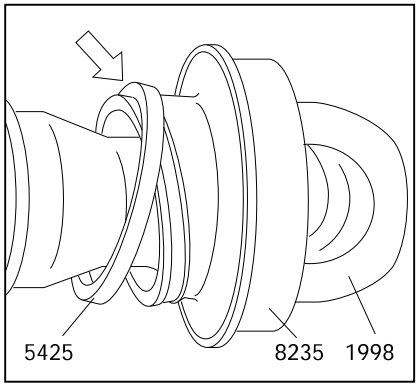

- Push the SM-pin joint seal (8235) with the correctly placed clamp ring (5425) up to the shoulder of coupling rod (1998).

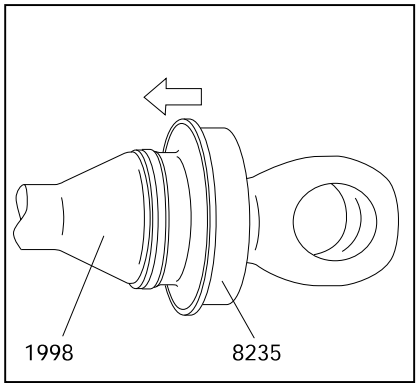

Continued Page 10.1R

10 DISMANTLING AND ASSEMBLY OF THE ROTATING PARTS

Basic joint size NM021 - NM105:

- Slip the circlip (5065) on to the coupling rod (1998). Slide the sleeve (5115) on to coupling rod (1998) so the inside diameter of chamfering (A) is being placed towards the coupling rod (1998) extension. Chamfering (A) will later on ease the installation over the O-rings (8060).
  Orient the head of coupling rod (1998) until it is in vertical position for the bore (B) for the pin (5075).

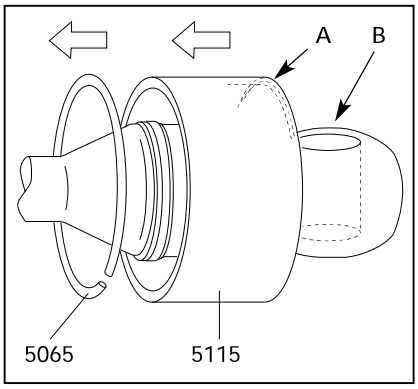

- Slide the coupling rod (1998) with SM-pin joint seal (8235) into the bore of rotor (1999) or connecting shaft (1050) and insert the pin (5075) from below and push up to the upper edge of coupling rod (1998).
  Support the pin (5075) against dropping out.
  Slide the SM-pin joint seal (8235) into the rotor (1999) or connecting shaft (1050) only from below, and in a slightly slanted position.

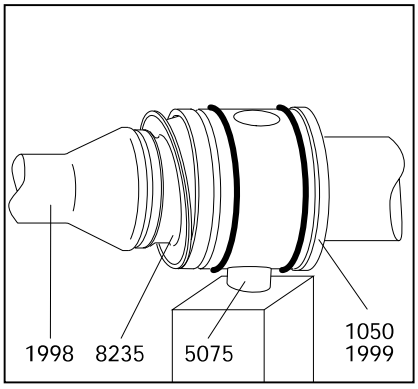

- For lubrication, use an oil can which should be fitted with a thin plastic hose having an outside diameter of not more than 4 mm.
  Insert this hose into the upper oil port opening in the rotor (1999) or connecting shaft (1050). Then slide the hose end past the coupling rod (1998) all the way down to the bottom section of the rotor head (1999) or connecting shaft (1050).
  Slowly fill with lubricating oil up to the filling port.

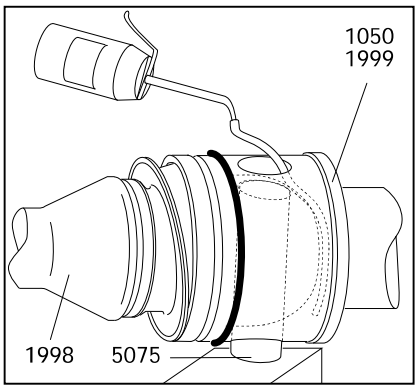

- Pull the hose out.
  Then insert the hose end through the small gap on the topside of SM-pin joint seal (8235) and guide it down to the bottom of the hollow space between coupling rod (1998) and SM-pin joint seal (8235).
  Slowly fill with lubricating oil up to the gap.

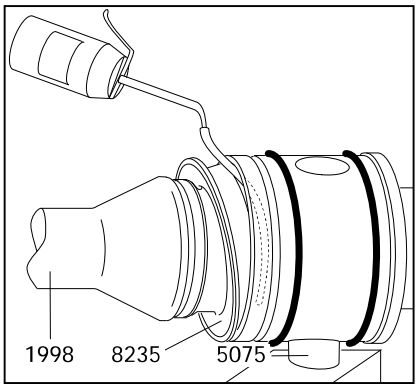

Continued Page 10.2

- Pull the hose out.
  Push the pin (5075) entirely into the bore of head of rotor (1999) or connecting shaft (1050) and retain in place.
  Only now, press the SM-pin joint seal (8235) into the bore of head of rotor (1999) or connecting shaft (1050) and push up to the shoulder. In doing so the SM-pin joint seal (8235) should be slightly bulbous around the outer surface. Wipe off overflow oil. Use this oil for lubricating the O-rings (8060).

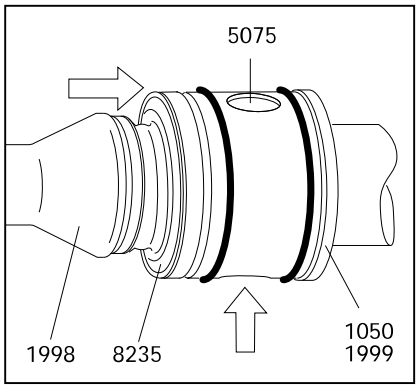

- Slip the sleeve (5110) or (5115), with its chamfering (A) forward, on to the head of rotor (1999) or connecting shaft (1050) and push up to the shoulder.

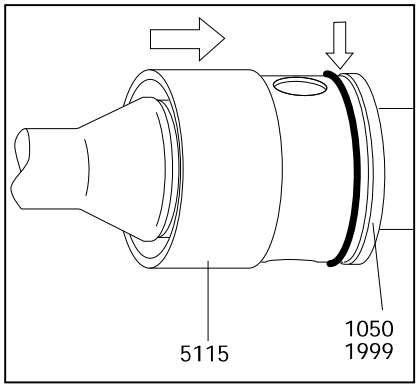

- Place the circlip (5065) into its groove on the rotor head (1999) or connecting shaft (1050) and carefully snap in place all around.

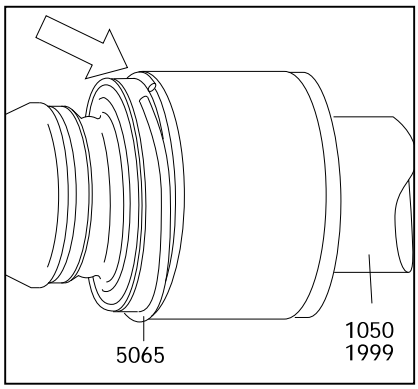

- **Basic joint size NM125:**

  Slide the coupling rod (1998) into the bore of the head of rotor (1999) and connecting shaft (1050) and insert the pins (5075).
  Insert the SM-pin joint seal (8235) (8235) into the head of rotor (1999) and connecting shaft (1050).
  Only then screw in one wear sleeve (5440) with O-ring (8060) into the head of rotor (1999) and connecting shaft (1050) and turn upside down.

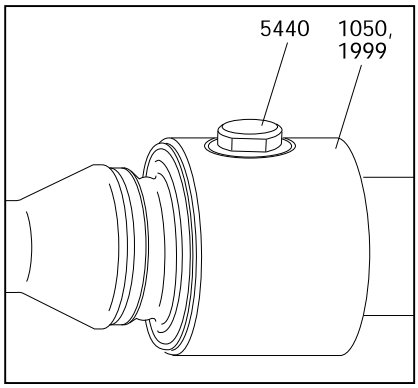

10 DISMANTLING AND ASSEMBLY OF THE ROTATING PARTS

- For lubrication, use an oil can which should be fitted with a thin plastic hose having an outside diameter of not more than 4 mm.
  Insert this hose into the upper oil port opening in the rotor (1999) or connecting shaft (1050). Then slide the hose end past the coupling rod (1998) all the way down to the bottom section of the rotor head (1999) or connecting shaft (1050).
  Slowly fill with lubricating oil up to the filling port.

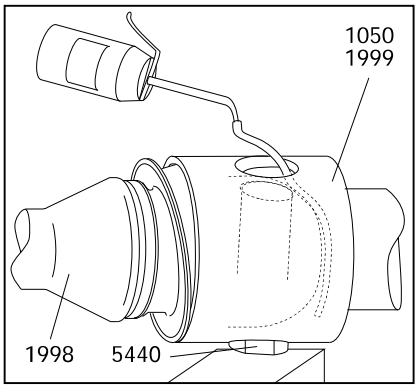

- Pull the hose out.
  Then insert the hose end through the small gap on the topside of SM-pin joint seal (8235) and guide it down to the bottom of the hollow space between coupling rod (1998) and SM-pin joint seal (8235).
  Slowly fill with lubricating oil up to the gap.
- Screw in the second wear sleeve (5440) with O-ring (8060) into the head of rotor (1999) and connecting shaft (1050).

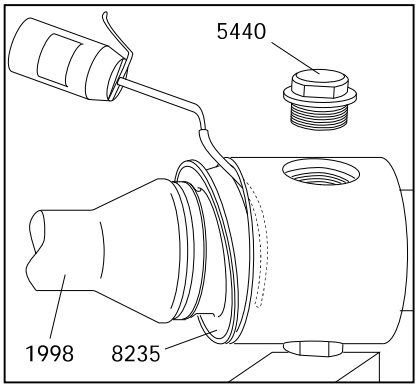

- **Basic joint size NM021 - NM125:**

  Drive connecting shaft (1050), coupling rod (1998) and rotor (1999) are now joined by means of the two pin joints.
  Pump housing (2010), stator (3005) and end stud (2005) may now be fitted.

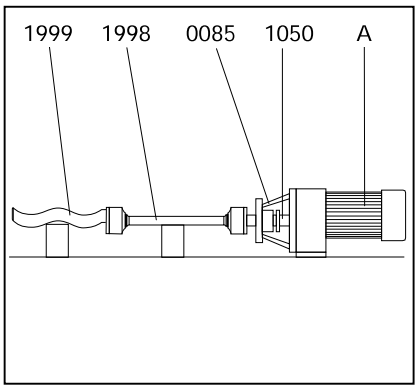

Continued Page 10.3

10.3 Dismantling and Assembly of the Rotating Parts with Pin Joints with SM-Pin Joint Seal (joint basic size NM015)

For removal and refitting of the rotor (1999) and coupling rod (1998) the pin joints should be dismantled and re-assembled as follows:

Dismantling:

- Push the SM-pin joint seal (8235) away from the rotor (1999), drive shaft (1005) or connecting shaft (1050) so the bore for the pin (5075) comes free.

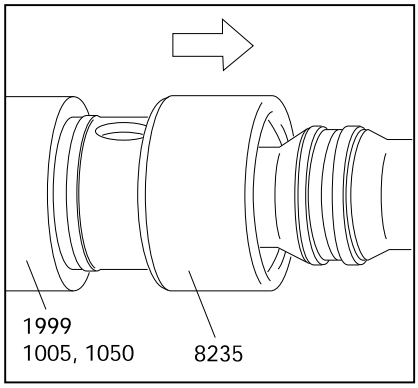

- Press the pin (5075) out of the rotor (1999), connecting shaft (1050) or drive shaft (1005). Then withdraw the coupling rod (1998) from the bore of rotor (1999), connecting shaft (1050) or drive shaft (1005).

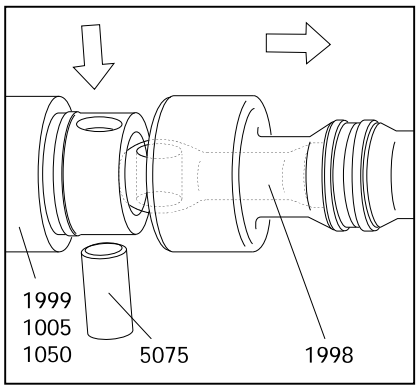

- Push the SM-pin joint seal (8235) towards the head of coupling rod (1998). In the narrow coupling rod section press the clamp ring (5425) out of the groove of the seal. Then slip the SM-pin joint seal (8235) and clamp ring (5425) off over the head of the coupling rod (1998).

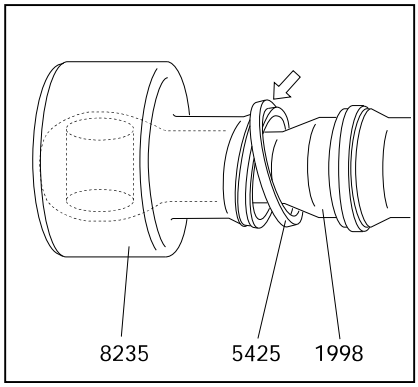

Continued Page 10.0R

10 DISMANTLING AND ASSEMBLY OF THE ROTATING PARTS

Re-Assembly:

- Slip the clamp ring (5425) and the SM-pin joint seal (8235) on over the head of the coupling rod (1998).

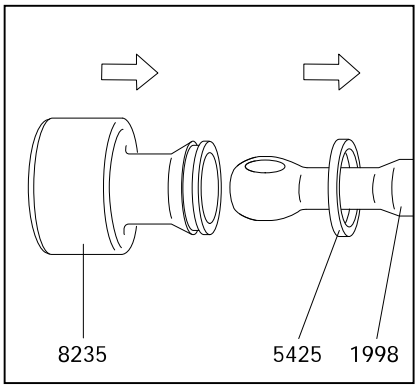

- Push the SM-pin joint seal (8235) towards the narrow section on the head of coupling rod (1998) and place the clamp ring (5425) back into the groove of the SM-pin joint seal (8235).
  Then move the SM-pin joint seal (8235) up to the coupling rod (1998) shoulder.

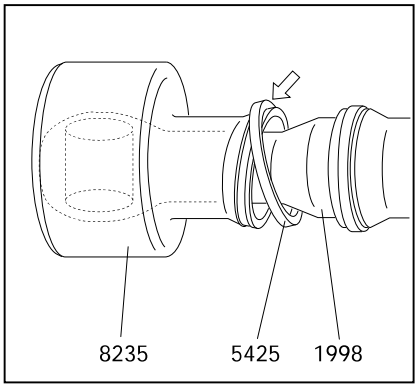

- Place the head of coupling rod (1998) into the bore of the rotor (1999), drive shaft (1005) or connecting shaft (1050).

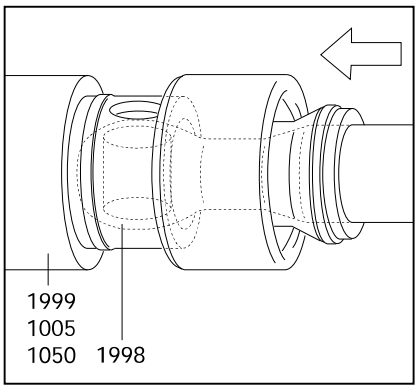

- Join the rotor (1999), drive shaft (1005) or connecting shaft (1050) and coupling rod (1998) by the pin (5075).
  Then push the SM-pin joint seal (8235) up to the shoulder of the rotor (1999), drive shaft (1005) or connecting shaft (1050).

  Re-assemble the second pin joint in the same manner.

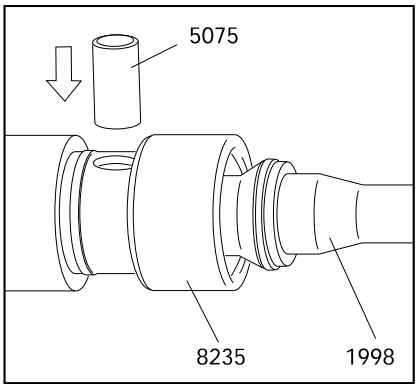

11 Removal and Fitting of the Connecting Shaft with Shaft Seal

Removal:

- Push the circlip (1035) in the direction to the mechanical seal.
- Remove pin (1030).
- Remove the shaft seal housing (7005) and mechanical seal (7010) together with connecting shaft (1050) and set ring (1035) from drive stool (0085) and the drive shaft.
  The thread of cylindrical head screw (1040) can be used as forcing screw.
- If a mechanical seal is installed, see description "Removal and Fitting of Mechanical Seal" after Page 12.0.

Fitting:

- Apply grease into the bore of the connecting shaft (1050) to avoid rust (e.g. TCE-Metallic 600).
- Assemble the shaft seal housing (7005) and mechanical seal (7010) together with connecting shaft (1050) and set ring (1035) with drive stool (0085) and push connecting shaft (1050) on to the drive shaft.
  At this please observe the installation direction of set ring (1035) (please see mark).
- If a mechanical seal is installed, see description "Removal and Fitting of Mechanical Seal" after Page 12.0.
- Connect the connecting shaft (1050) and the drive shaft by pin (1030).
  Push set ring (1035) on pin (1030).

12.1 Removal and Fitting of the Single Mechanical Seal

- **Carefully** slide out mechanical seal housing (7005) together with the parts of the mechanical seal contained in it from connecting shaft (1050).
- **Carefully** push mechanical seal (7010) stationary seat out of mechanical seal housing (7005).

Refitting is a simple reversal of the above procedure.

- To reduce frictional forces during seal assembly, apply some glycerine to the shaft and the seal housing in the area of the gaskets.
- Special care must be taken when fitting double PTFE-coated gaskets: the **joint** of the outer coating must point away from the seal assembly direction, otherwise the coating may open or be pulled off!



Ensure that the distribution of pressure is uniform when inserting the pressure sensitive counter rings. When inserting larger rings, use a suitable mandrel.
Do not allow any foreign bodies to get between the sliding surfaces.

- Exactly keep to the seal installation dimensions and ensure that the sealing faces are correctly pressed together (see table on sectional drawing W 209.000 or W 210.000).
- Insert mechanical seal (7010) stationary seat into mechanical seal housing (7005).
- Insert mechanical seal housing (7005) together with the stationary seat into the drive stool **without the installed connecting shaft (1050).**
- If necessary take the installation dimension from the table and add the thickness S of the set ring (7086) when existing.
- Mark this installation dimension on the connecting shaft (1050).
- Fix the rotating unit of the mechanical seal (7010) on the connceting shaft (1050) depending on the installation dimension so that the rotating unit of the mechanical seal (7010) or the set ring (7086) is at the mark.
- Insert connecting shaft (1050) with the rotating unit of the mechanical seal (7010) into drive stool (0085) and install lip seal (7091, if existing. Push the set ring (1035) on to connecting shaft (1050) and observe at this the installation direction (see mark).
Push connecting shaft (1050) on to the drive shaft and connect with pin (1030). Push the set ring (1035) on pin (1030).

Inspection Opening at the Pump Housing

gray cast iron model on from size NM045

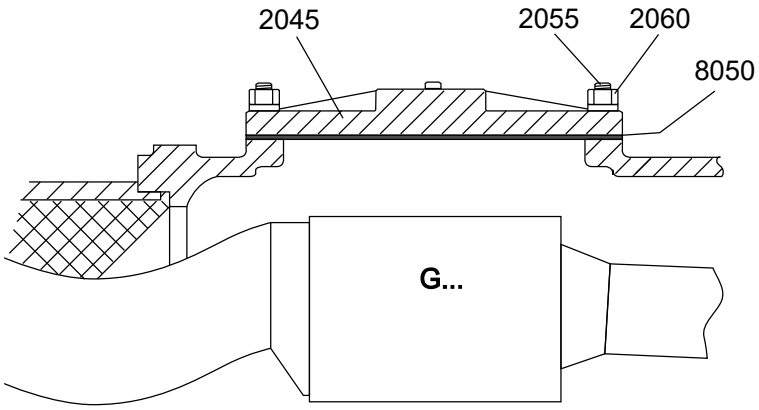

design for welded housings – nominal size DN 76,1 – ISO 2852

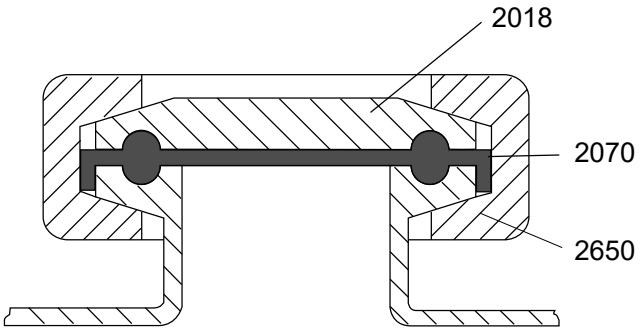

14 Recommended Spare Parts

In general, we have all spare parts in stock. Our subsidiaries and exclusive representatives also hold a certain stock. For special cases and when short waiting periods are not acceptable, we recommend to keep an amount of spare parts, corresponding to the pump, in stock on site (please see table below).

- **Rotor**
- **Stator**
- **Elastomer parts as O-rings and sleeves**
- **joint parts**
- **shaft seals.**

To avoid mistakes in delivery, please identify the parts by their position number shown in the spare parts list or on the sectional drawing.

For placing a spare parts order, it is absolutely necessary to give the following details:

Pieces (see column 2) - Designation (see column 3) - Identification Number (see column 4)

The column details are taken from the spare parts list. See example.

Example:

SPARE PARTS LIST		10.05.94		10:50:18	Page: 1 / 5
1		2		3	4
PART EURO	POS.	Quantity	Unit	Designation Size – Norm – Material/Surface	Ident-Number
3410	0005	1,000	pc	bearing housing	850221
2910	0010	1,000	pc	distance sleeve	850220
3520	0015	1,000	pc	bearing cover	850222

15 Sectional Drawings and List of Spare Parts

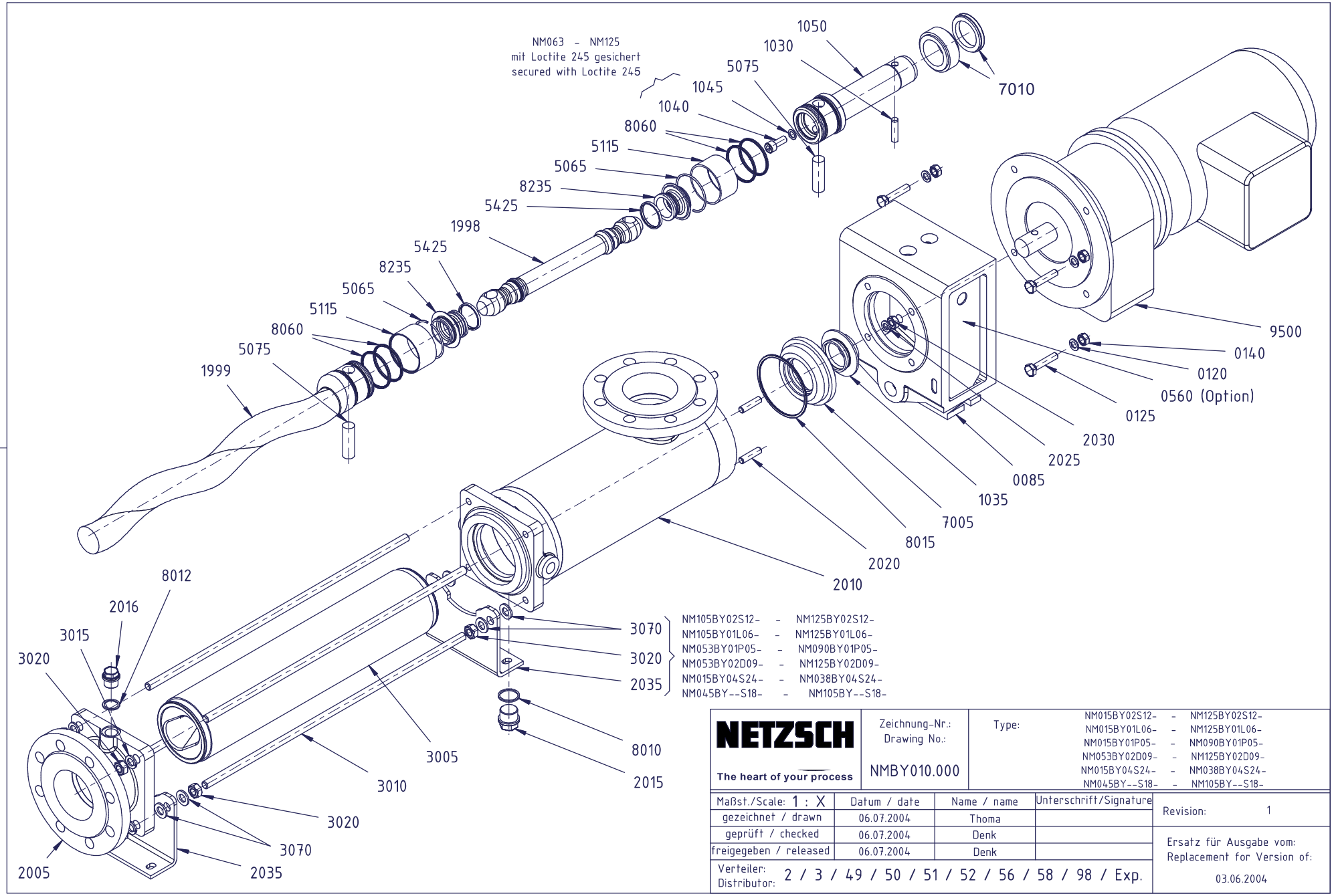

NETZSCH

The heart of your process

Zeichnung-Nr.: Drawing No.:	NMBY010.000
Type:	NM015BY02S12- - NM125BY02S12- NM015BY01L06- - NM125BY01L06- NM015BY01P05- - NM090BY01P05- NM053BY02D09- - NM125BY02D09- NM015BY04S24- - NM038BY04S24- NM045BY--S18- - NM105BY--S18-

Maßst./Scale: 1 : X	Datum / date	Name / name	Unterschrift/Signature
gezeichnet / drawn	06.07.2004	Thoma	
geprüft / checked	06.07.2004	Denk	
freigegeben / released	06.07.2004	Denk	

Verteiler: Distributor: 2 / 3 / 49 / 50 / 51 / 52 / 56 / 58 / 98 / Exp.

Revision: 1

Ersatz für Ausgabe vom: Replacement for Version of: 03.06.2004

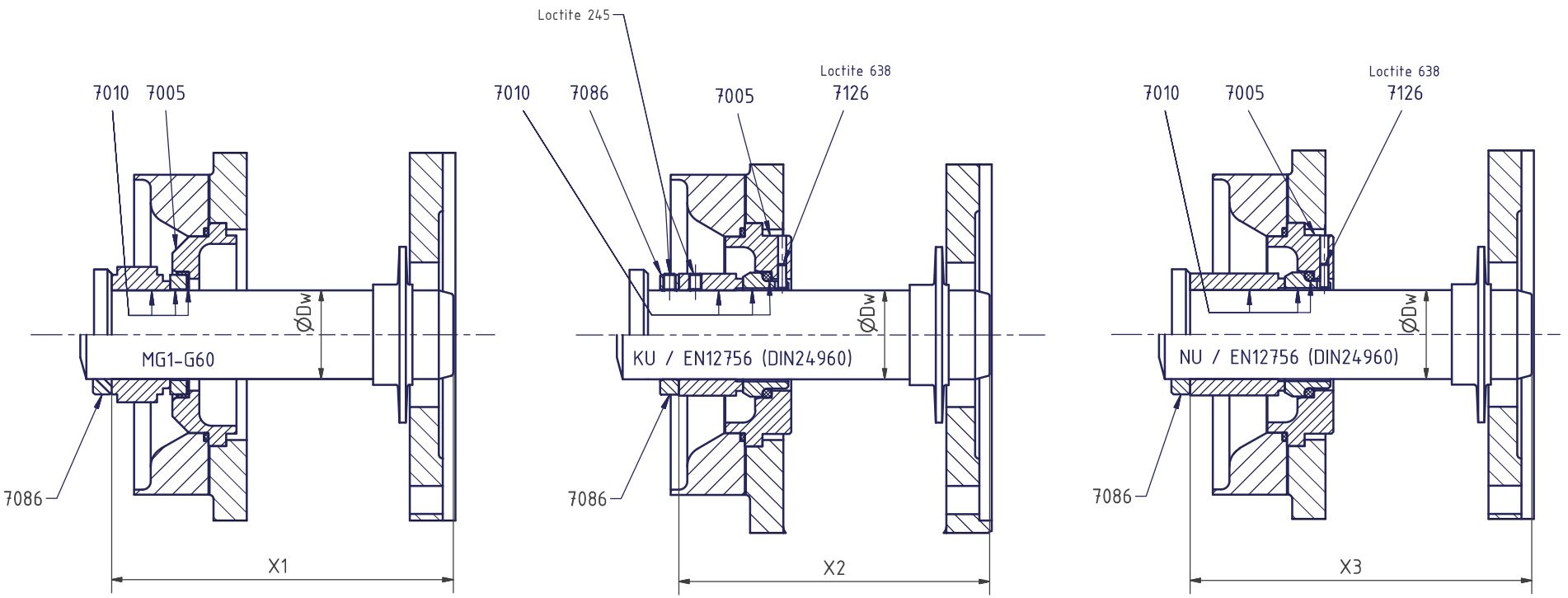

Dw 35 - Dw 100

Dw	MG1-G60	KU / EN12756 (DIN24960)	NU / EN12756 (DIN24960)
	X1	X2	X3
25	116,5	116,5	–
35	152,1	139,6	152,1
40	147,5	137,5	147,5
43	165,5	150,5	165,5
55	181	158,5	181
65	201,5	174	201,5
70	207	187	207
85	219	189	219
100	249	224	249

NETZSCH

Zeichnung-Nr.: Drawing No.: W209.000

Einf. wirk. GLRD
Single Mechanical Seal

Type: NM015B/S- (P) - NM105B/S- (P)

Maßst./Scale: 1 : X	Datum / date	Name / name	Unterschrift/Signature
gezeichnet / drawn	29.07.2011	Thoma	
geprüft / checked	29.07.2011	Denk	
freigegeben / released	29.07.2011	Denk	

Verteiler: Distributor: 2 / 3 / 49 / 50 / 51 / 52 / 58 / 94 / 95 / 97 / 98 / exp

Revision: 5

Ersatz für Ausgabe vom: Replacement for Version of: 20.08.2009

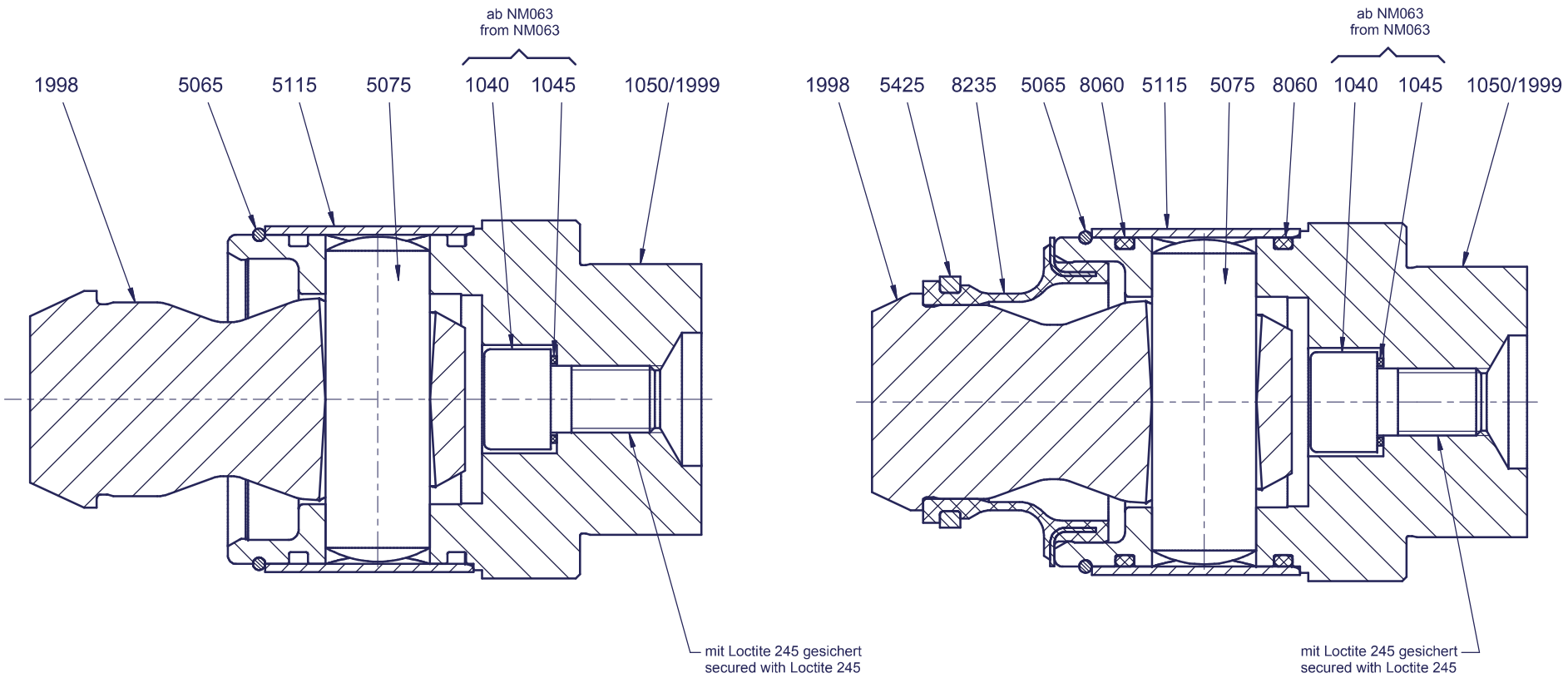

nur/only NM015B- (P)

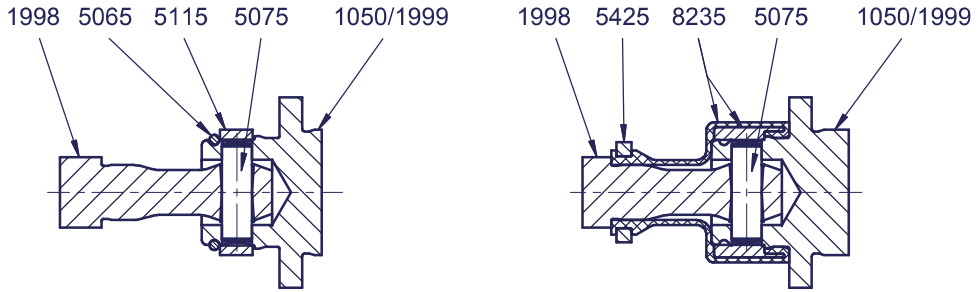

NETZSCH The heart of your process	Zeichnung-Nr.: Drawing No.: G146.000	Bolzengelenk ohne/mit SM-Bolzenabdichtung Pin Joint without/with SM-Pin Joint Seal			Type: NM015B- (P) - NM105B- (P)
Maßst./Scale: 1 : X	Datum / date	Name / name	Unterschrift/Signature	Revision:	1
gezeichnet / drawn	14.10.2003	Preintner			
geprüft / checked	14.10.2003	Thoma		Ersatz für Ausgabe vom: Replacement for Version of:	
freigegeben / released	14.10.2003	Thoma			
Verteiler: Distributor:	2 / 3 / 50 / 51 / 52 / 58 / 98			23.05.2003	

Inquiry/Order Form

NETZSCH

►Please copy before use

☐ Inquiry ☐ Order

NETZSCH Canada, Inc.
500 Welham Road
Barrie, ON, L4N 8Z7

Tel: 1-705-797-8426
Fax:1-705-797-8427
ntc@netzsch.com
www.pumps.netzsch.com

Company Address

Person in Charge

Tel:

Fax:

Delivery address

Billing address

Important: Please fill in		
Machine #	Pump Com #	Type
Quantity	Pos. No.	Description

Required delivery date_____

Address_____

Date_____ Signature/co. stamp_____

DATA SHEET

Three Phase Induction Motor - Squirrel Cage

Customer	:

Product line	: NEMA Premium Efficiency Three-Phase	Product code :	14337968

Frame	: 143/5TC	Cooling method	: IC411 - TEFC
Insulation class	: F	Mounting	: F-1
Duty cycle	: Cont.(S1)	Rotation¹	: Both (CW and CCW)
Ambient temperature	: -20°C to +40°C	Starting method	: Direct On Line
Altitude	: 1000 m.a.s.l.	Approx. weight³	: 31.5 kg
Protection degree	: IP55	Moment of inertia (J)	: 0.0041 kgm²
Design	: B		

Output [HP]		1
Poles		4
Frequency [Hz]		60
Rated voltage [V]		575
Rated current [A]		1.14
L. R. Amperes [A]		9.84
LRC [A]		8.6x(Code M)
No load current [A]		0.748
Rated speed [RPM]		1760
Slip [%]		2.22
Rated torque [kgfm]		0.414
Locked rotor torque [%]		290
Breakdown torque [%]		370
Service factor		1.15
Temperature rise		80 K
Locked rotor time		32s (cold) 18s (hot)
Noise level²		51.0 dB(A)
Efficiency (%)	25%	
	50%	80.0
	75%	82.5
	100%	85.5
Power Factor	25%	
	50%	0.57
	75%	0.70
	100%	0.77

		Drive end	Non drive end
Bearing type	:	6205 2RS	6204 2RS
Sealing	:	Oil Seal	Lip Seal
Lubrication interval	:	-	-
Lubricant amount	:	-	-
Lubricant type	:	Mobil Polyrex EM	

Foundation loads

Max. traction : 27 kgf

Max. compression : 59 kgf

Notes

This revision replaces and cancel the previous one, which must be eliminated.
(1) Looking the motor from the shaft end.
(2) Measured at 1m and with tolerance of +3dB(A).
(3) Approximate weight subject to changes after manufacturing process.
(4) At 100% of full load.

These are average values based on tests with sinusoidal power supply, subject to the tolerances stipulated in NEMA MG-1.

Rev.	Changes Summary	Performed	Checked	Date

Performed by				
Checked by			Page	Revision
Date	17/05/2022		1 / 3	

This document is exclusive property of WEG S/A. Reprinting is not allowed without written authorization of WEG S/A.
Subject to change without notice

Customer :

Thermal protection

ID	Application	Type	Quantity	Sensing Temperature
1	Winding	Thermostat - 2 wires	1 x Phase	155 ºC

Rev.	Changes Summary	Performed	Checked	Date

Performed by				
Checked by			Page	Revision
Date	17/05/2022		2 / 3	

This document is exclusive property of WEG S/A. Reprinting is not allowed without written authorization of WEG S/A.
Subject to change without notice

LOAD PERFORMANCE CURVE

Three Phase Induction Motor - Squirrel Cage

Customer	:

Product line	: NEMA Premium Efficiency Three-Phase	Product code :	14337968

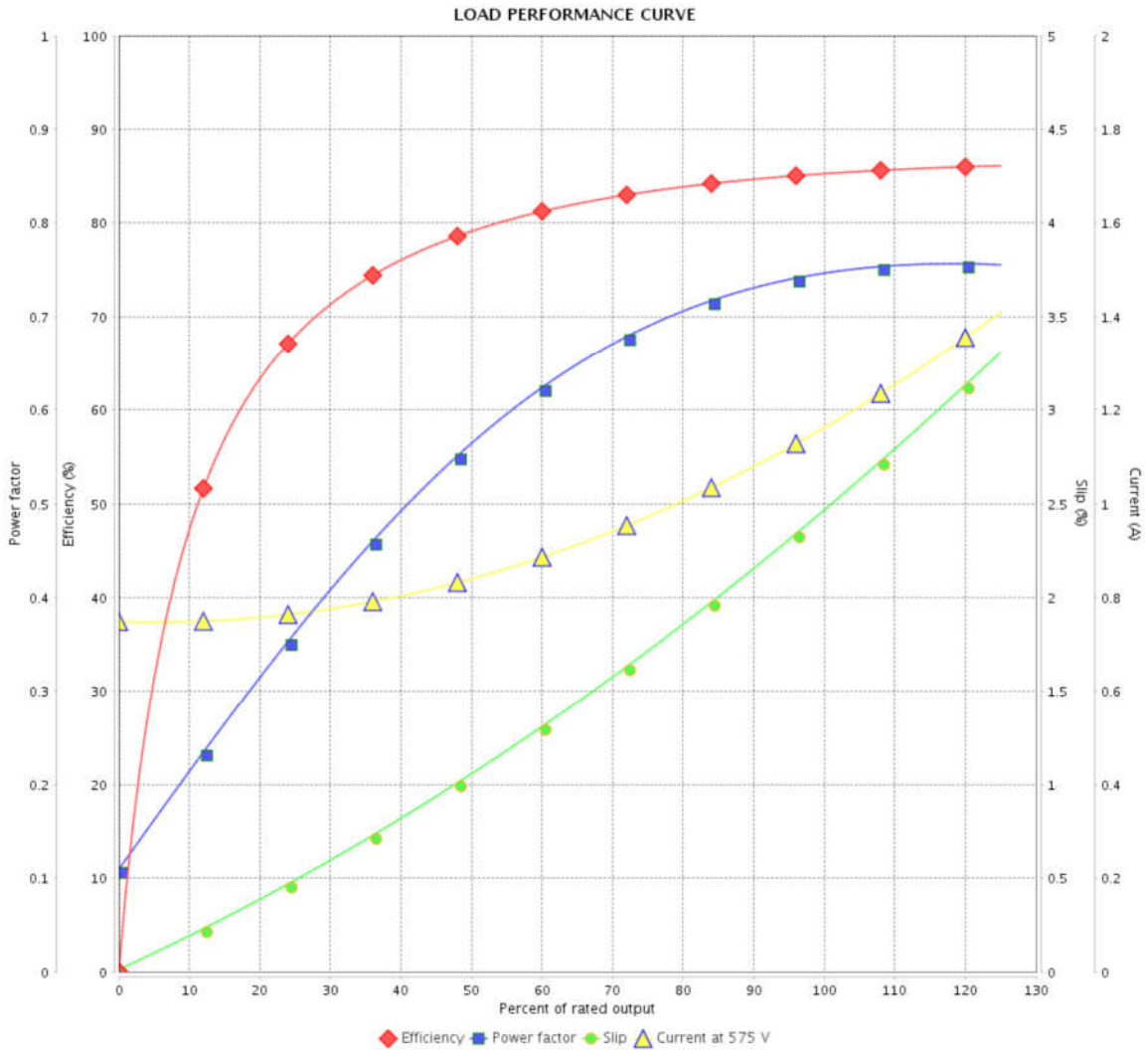

Performance	: 575 V 60 Hz 4P

Rated current	: 1.14 A	Moment of inertia (J)	: 0.0041 kgm²
LRC	: 8.6	Duty cycle	: Cont.(S1)
Rated torque	: 0.414 kgfm	Insulation class	: F
Locked rotor torque	: 290 %	Service factor	: 1.15
Breakdown torque	: 370 %	Temperature rise	: 80 K
Rated speed	: 1760 rpm	Design	: B

Rev.	Changes Summary	Performed	Checked	Date

Performed by				
Checked by			Page	Revision
Date	17/05/2022		3 / 3	

This document is exclusive property of WEG S/A. Reprinting is not allowed without written authorization of WEG S/A.
Subject to change without notice

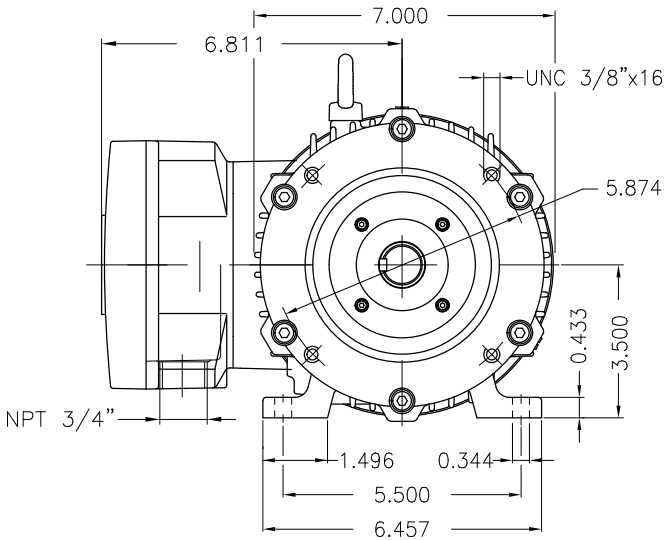

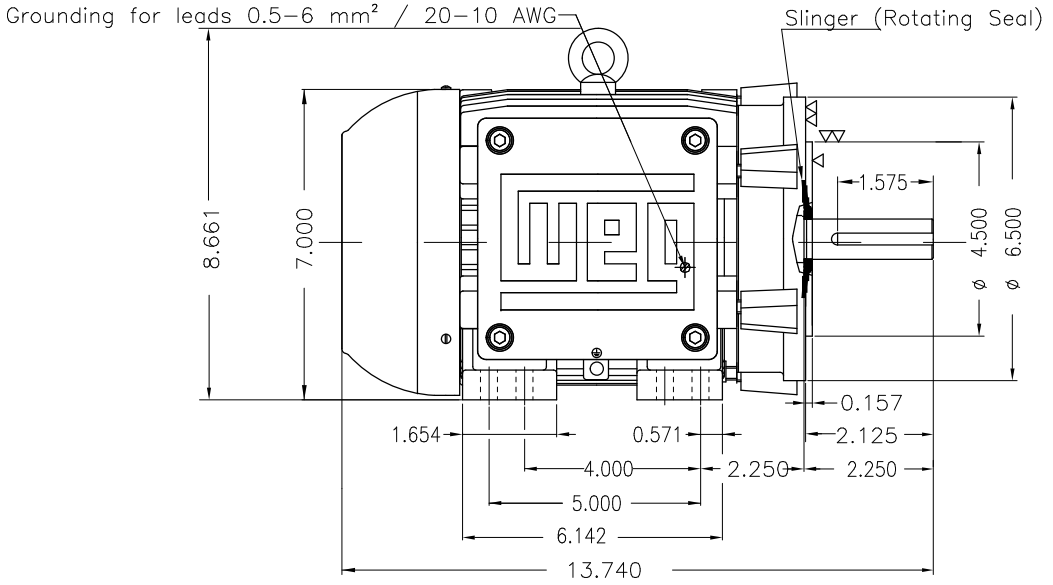

DE Shaft End

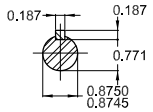

Color RAL 5009
Painting plan 202P
Mounting NEMA F-1
Mounting B34R(D)

1 HP 04 Poles 60 Hz | A

ECM	LOC	SUMMARY OF MODIFICATIONS	EXECUTED	CHECKED	RELEASED	DATE	VER

EXECUTED DATAVIEWERUSER
CHECKED
RELEASED
REL DT.

THREE PH. MOTOR EXPLOSION PROOF PREM. EFF.
FRAME 143/5TC IP55 TEFC

PREVIEW
WDD

WMO Jaragua do Sul Product Engineering

SHEET 1 / 1

Dimensions in Inches
XME A3

WEG's property. Forbidden reproduction without previous authorization.

MOTORS AND DRIVES

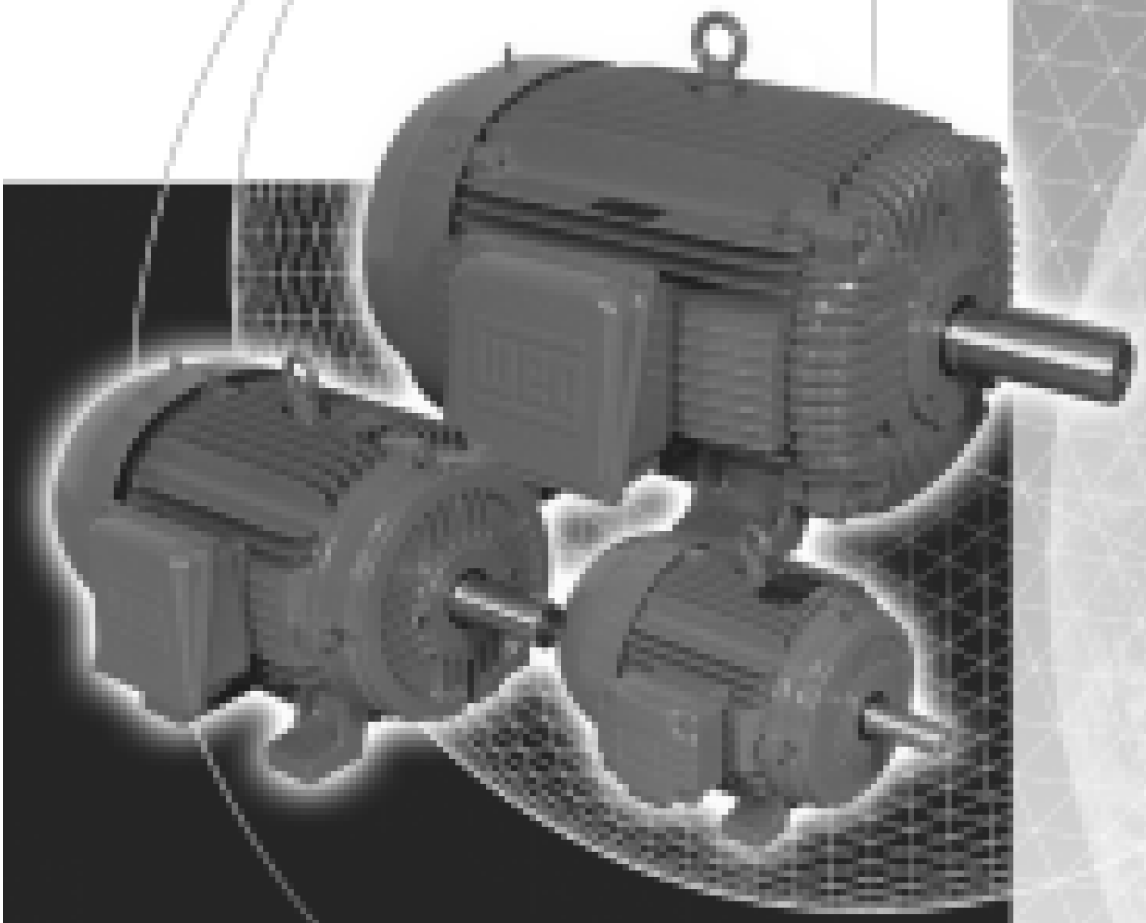

INSTALLATION AND MAINTENANCE INSTRUCTIONS FOR ELECTRIC MOTORS

Frames 143/5T - 586/7T

QUALITY SYSTEM ISO9001 WEG MOTORES

ISO 9001



READ CAREFULLY THIS MANUAL BEFORE INSTALLING THE MOTOR.

RECEIVING CHECK

✓ Check if any damage has occured during transportation.
✓ Check nameplate data.
✓ Remove shaft locking device (if any) before operating the motor.
✓ Turn the shaft with the hand to make sure if it is turning freely.

HANDLING AND TRANSPORTATION

1 - General



MOTORS MUST NOT BE LIFTED BY THE SHAFT, BUT BY THE EYE BOLTS WHICH ARE PROPERLY DESIGNED TO SUPPORT THE MOTOR WEIGHT.

Lifting devices, when supplied, are designed only to support the motor. If the motor has two lifting devices then a double chain must be used to lift it.

Lifting and lowering must be done gently without any shocks, otherwise the bearings can get damaged.



DURING TRANSPORTATION, MOTORS FITTED WITH ROLLER OR ANGULAR CONTACT BEARINGS ARE PROTECTED AGAINST BEARING DAMAGES WITH A SHAFT LOCKING DEVICE.



THIS LOCKING DEVICE MUST BE USED ON ANY FURTHER TRANSPORT OF THE MOTOR, EVEN WHEN THIS MEANS TO UNCOPULE THE MOTOR FROM THE DRIVEN MACHINE.

STORAGE

If motors are not immediately installed, they must be stored in dry places, free of dust, vibrations, gases, corrosive smokes, under constant temperature and in normal position free from other objects.

In case the motors are stored for more than two years, the bearings must be changed or the lubrication grease must be totally replaced after cleaning.

Single phase motors when kept in stock for 2 years or more must have their capacitors replaced (if any).

We recommend to turn the shaft (by hands) at least once a month, and to measure the insulation resistance before installing it, in cases of motors stored for more than 6 months or when subject to high humidity areas.

If motor is fitted with space heaters, these should be switched on.

Insulation Resistance Check

Measure the insulation resistance before operating the motor and/or when there is any sign of humidity in the winding.

The resistance measured at 25°C (77°F) must be:

Ri > (20 x U) / (1000 + 2P) [Mohm] (measured with a MEGGER at 500 V d.c.); where U = voltage (V); P = power (kW).

If the insulation resistance is less than 2 megaohms, the winding must be dried according to the following:
✓ Warm it up inside an oven at a minimum temperature of 80°C (176°F) increasing 5°C (41°F) every hour until 105°C (221°F), remaining under this temperature for at least one hour. Check if the stator insulation resistance remains constant within the accepted values. If not, stator must be reimpregnated.

INSTALLATION

1 - Safety

All personnel involved with electrical installations, either handling, lifting, operation or maintenance must be well informed and up-to-dated concerning the safety standard and principles that govern the work and carefully follow them.

We strongly recommend that these jobs are carried out by qualified personnel.



MAKE SURE THAT THE ELECTRIC MOTORS ARE SWITCHED OFF BEFORE STARTING ANY MAINTENANCE SERVICE.

Motors must be protected against accidental starts.

When performing any maintenance service, disconnect the motor from the power supply. Make sure all accessories have been switched off and disconnected.

Do not change the regulation of the protecting devices to avoid damaging.



LEAD CONNECTION IN SULATION INSIDE THE TERMINAL BOX MUST BE DONE WITH AN INSULATING MATERIAL COMPATIBLE WITH MOTOR THERMAL CLASS WHICH IS SHOWN ON THE MOTOR NAMEPLATE.

2 - Operating Conditions

Electric motors, in general, are designed for operation at an altitude of 1000m above sea level for an ambient temperature between 25°C (77°F) and 40°C (104°F). Any variation is stated on the nameplate.



COMPARE THE CURRENT, VOLTAGE, FREQUENCY, SPEED, OUTPUT AND OTHER VALUES DEMANDED BY THE APPLICATION WITH THE DATA GIVEN ON THE NAMEPLATE.

Motors supplied for hazardous locations must be installed in areas that comply with that specified on the motor nameplate.



KEEP AIR INLET AND OUTLET FREE AND CLEAN. THE AIR BLOWN OUT BY THE MOTOR SHALL NOT ENTER AGAIN. THE DISTANCE BETWEEN THE AIR INLET AND THE WALL MUST BE AROUND ¼ OF THE INLET OPENING DIAMETER.

3 - Foundation

Motors provided with feet must be installed on though foundations to avoid excessive vibrations.

The purchaser is fully responsible for the foundation.

Metal parts must be painted to avoid corrosion.

The foundation must be uniform and sufficiently tough to support any short circuit strengths. It must be designed in such a way to stop any vibration originated from resonance.

4 - Drain Holes

Make sure the drains are placed in the lower part of the motor when the mounting configuration differs from that specified on the motor purchase order.

5 - Balancing

WEG MOTORS ARE DYNAMICALLY BALANCED, WITH HALF KEY AT NO LOAD AND UNCOUPLED.

Transmission elements such as pulleys, couplings, etc must be dynamically balanced with half key before installation. Use always appropriate tools for installation and removal.

6 - Alignment

ALIGN THE SHAFT ENDS AND USE FLEXIBLE COUPLING, WHENEVER POSSIBLE.

Ensure that the motor mounting devices do not allow modifications on the alignment and further damages to the bearings.

When assembling a half-coupling, be sure to use suitable equipment and tools to protect the bearings.

Suitable assembly of half-coupling: check that clearance Y is less than 0.05mm and that the difference X1 to X2 is less than 0.05m as well.

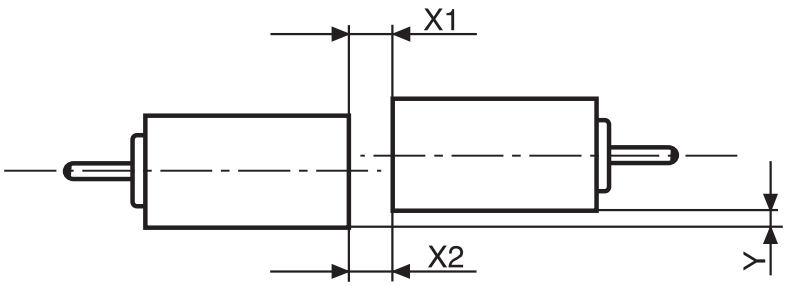

Note: The "X" dimension must be at least 3mm.

7 - Belt Drive

When using pulley or belt coupling the following must be observed:
✓ Belts must be tighten just enough to avoid slippage when running, according to the specifications stated on the belt supplier recommendation.

WARNING:
Excessive tension on the pulleys will damage the bearings and lead to a probable shaft rupture.

8 - Connection

WARNING: Voltage may be connected at standstill inside the terminal box for heating elements or direct winding heating.

WARNING: The capacitor on single-phase motors can retain a charge which appears across the motor terminals, even when the motor has reached standstill.



A WRONG CONNECTION CAN BURN THE MOTOR.

Voltage and connection are indicated on the nameplate. The acceptable voltage variation is ± 10%, the acceptable frequency variation is ± 5% and the total acceptable variation is ± 10%.

9 - Starting Methods

The motor is rather started through direct starting. All Weg motors must be connected as shown on the motor nameplate, failure to follow the motor nameplate could lead to motor failure.

In case this is not possible, use compatible methods to the motor load and voltage.

✓ 3 lead single voltage and 9 lead dual voltage motors can be started as follows:
Full Voltage Direct On Line.
Auto-Transformer Starting.
Electronic Soft-Starting.
VFD Starting - subject to verification and application analysis.

✓ 6 lead single voltage motors and 12 lead dual voltage motors can be connected as follows:
Full Voltage Direct On Line.
WYE/DELTA Starting.
Auto-Transformer Starting.
Electronic Soft-Starting.
VFD Starting - subject to verification and application analysis.

The rotation direction is clockwise if the motor is viewed from DE side and if the phases are connected according to the sequence L1, L2, L3.

To change the rotation direction, interchange two of the connecting leads.



THE CONNECTION TO THE POWER SUPPLY MUST BE DONE BY QUALIFIED PERSONNEL AND WITH FULL ATTENTION TO ASSURE A SAFE AND PERMANENT CONNECTION. AFTER CONNECTING THE MOTOR, CHECK FOR ANY STRANGE BODY INSIDE THE TERMINAL BOX. THE CABLE INLETS NOT IN USE MUST BE CLOSED.

Make sure to use the correct cable dimension, based on the rated current stamped on the motor nameplate.



BEFORE ENERGIZING THE TERMINALS, CHECK IF THE EARTHING IS MADE ACCORDING TO THE ACTUAL STANDARDS. THIS IS ESSENTIAL AGAINST ACCIDENT RISKS.

When the motor is supplied with protective or monitor temperature device such as thermostats, thermistors, thermal protector, etc, connect their terminals to the corresponding devices on the control panel.

10- Start-Up



THE KEY MUST BE FASTENED OR REMOVED BEFORE STARTING THE MOTOR.

a) The motor must start and operate smoothly. In case this does not occur, turn it off and check the connections and the mounting before starting it again.

b) If there is excessive vibration, check if the fastening screws are correctly fastened. Check also if the vibration comes from a neighbour machine. Periodical vibration checks must be done.

c) Run the motor under rated load for a short period of time and compare if the running current is equal to that stamped on the nameplate.

MAINTENANCE



WARNING:
SAFETY CHECK LIST.

1 - General Inspection

- ✓ Check the motor periodically.
- ✓ Keep the motor clean and assure free air flow.
- ✓ Check the seals or V Ring and replace them, if required.
- ✓ Check the connections as well as supporting screws.
- ✓ Check the bearings and observe:
  Any excessive noise, bearing temperature and grease condition.
- ✓ When a changing, under normal conditions, is detected, check the motor and replace the required parts.
  The frequency of the inspections depends on the motor type and on the application conditions.

LUBRICATION



FOLLOW THE REGREASING INTERVALS. THIS IS FUNDAMENTAL FOR PROPER MOTOR OPERATION.

1 - Machines without Grease Nipples

In these cases the regreasing shall be done at the preventive maintenance job observing the following aspects:

✓ Disassemble carefully the motors.
✓ Take all the grease out.
✓ Wash the bearing with querosene or diesel.
✓ Regrease the bearing immediately.

2 - Machines Fitted with Grease Nipples

It is strongly recommended to grease the machine while running. This allows the grease renewal in the bearing housing. When this is not possible due to turning parts by the grease device (pulleys, bushing, etc) that offer some risk to the physical integrity of the operator, proceed as follows:

✓ Clean the area near to the grease nipple.
✓ Put approximately half of the total grease and run the motor for 1 minute at full speed. Then turn off the motor and pump the rest of the grease.
✓ The injection of all the grease with the motor in standstill can make the grease penetrate into the motor, through the inner seal of the bearing housing.

When regreasing, use only special bearing grease with the following properties:

RELUBRICATION INTERVALS RECOMMENDED - POLYREX® EM GREASE (ESSO/EXXON)

Frame	Amount of grease (g)	3600 rpm	3000 rpm	1800 rpm	1500 rpm	1200 rpm	1000 rpm	900 rpm	750 rpm	720 rpm	600 rpm	500 rpm
Relubrication intervals in hours - ball bearings												
254/6T	*13*	*15700*	*18100*	*20000*	*20000*	*20000*	*20000*	*20000*	*20000*	*20000*	*20000*	*20000*
284/6T	*18*	*11500*	*13700*	*20000*	*20000*	*20000*	*20000*	*20000*	*20000*	*20000*	*20000*	*20000*
324/6T	*21*	*9800*	*11900*	*20000*	*20000*	*20000*	*20000*	*20000*	*20000*	*20000*	*20000*	*20000*
364/5T	*27*	*3600*	*4500*	*9700*	*11600*	*14200*	*16400*	*17300*	*19700*	*20000*	*20000*	*20000*
404/5TS	*27*	*3600*	*4500*	*9700*	*11600*	*14200*	*16400*	*17300*	*19700*	*20000*	*20000*	*20000*
444/5TS	*27*	*3600*	*4500*	*9700*	*11600*	*14200*	*16400*	*17300*	*19700*	*20000*	*20000*	*20000*
504/5TS	*27*	*3600*	*4500*	*9700*	*11600*	*14200*	*16400*	*17300*	*19700*	*20000*	*20000*	*20000*
586/7TS	*27*	*3600*	*4500*	*9700*	*11600*	*14200*	*16400*	*17300*	*19700*	*20000*	*20000*	*20000*
Relubrication intervals in hours - cylindrical roller bearings												
324/5T	*21*	*9800*	*11900*	*20000*	*20000*	*20000*	*20000*	*20000*	*20000*	*20000*	*20000*	*20000*
364/5T	*27*			*9700*	*11600*	*14200*	*16400*	*17300*	*19700*	*20000*	*20000*	*20000*
404/5T	*34*			*6000*	*7600*	*9500*	*11600*	*13800*	*15500*	*15500*	*17800*	*20000*
444/5T	*45*			*4700*	*6000*	*7600*	*9800*	*12200*	*13700*	*13700*	*15700*	*20000*
447/5T	*45*			*4700*	*6000*	*7600*	*9800*	*12200*	*13700*	*13700*	*15700*	*20000*
504/5T	*45*			*4700*	*6000*	*7600*	*9800*	*12200*	*13700*	*13700*	*15700*	*20000*
586/7T	*60*			*3300*	*4400*	*5900*	*7800*	*10700*	*11500*	*11500*	*13400*	*17300*

WARNING:

The table above is specifically intended for relubrication with Polyrex® EM grease and bearing absolute operating temperature of:

✓ 70°C (158°F) for 254/6T to 324/6T frame motors;
✓ 85°C (185°F) for 364/5T to 586/7T frame motors.

For every 15°C (59°F) above these limits, relubrication interval must be reduced by half.

Shielded bearing (ZZ) are lubricated for bering's life as long as they operate under normal ambient conditions and temperature of 70°C(158°F).



WE RECOMMEND TO USE BALL BEARINGS FOR MOTORS DIRECTLY COUPLED TO THE LOAD.



WARNING:
EXCESS OF GREASE CAN CAUSE BEARING OVERHEATING RESULTING IN COMPLETE DAMAGE.

Compatibility of Polyrex® EM grease with other types of grease:

Containing polyurea thickener and mineral oil, the Polyrex® EM grease is compatible with other types of grease that contain:

- ✓ Lithium base or complex of lithium or polyurea and highly refined mineral oil;
- ✓ Inhibitor additive against corrosion, rust and anti-oxidant additive.

Notes:

- ✓ Although Polyrex® EM is compatible with the types of grease given above, we do no recommend to mix it with any other greases.
- ✓ If you intend to use a type of grease different than those recommended above, first contact WEG.
- ✓ On applications (with high or low temperatures, speed variation, etc), the type of grease and relubrication interval are given on an additicional nameplate attached to the motor.
- ✓ Vertical mounted motors must have the relubrication intervals reduced by half.



THE USE OF STANDARD MOTORS IN SPECIFIC AREAS OR SPECIAL APPLICATIONS MUST BE DONE BY CONSULT TO THE GREASE MANUFACTURER OR WEG.

ASSEMBLY AND DISASSEMBLY

Disassembly and assembly must be done by qualified personnel using only suitable tools and appropriated methods. The stator grips must be applied over the side face of the inner ring to be disassembled or over and adjacent part.

It is essential that the bearings disassembly and assembly be done under cleanning conditions to ensure good operation

and to avoid damages. New bearings shall only be taken out from their cases when assembling them.

Before installing a new bearing it is required to check the shaft fitting for any sharp edge or strike signals.

For bearing assembly, warm their inner parts with suitable equipment - inductive process - or use suitable tools.

SPARE PARTS

When ordering spare parts, please specify the full type designation and product code as stated on the motor nameplate.

Please also inform the motor serial number stated on the nameplate.

MOTORS FOR HAZARDOUS LOCATIONS

Besides the recommendations given previously, these ones must be also followed:



THE SPECIFICATION OF THE MOTOR INSTALLATION PLACE IS FOR CUSTOMER'S RESPONSIBILITY, WHO WILL ALSO DETERMINE THE ENVIRONMENT CHARACTERISTICS.

Motors for hazardous locations are manufactured according to specific standards for such environments and they are certified by worldwide certifying entities.

1 - Installation

The complete installation must follow procedures given by the local legislation in effect.



THE INSTALLATION OF HAZARDOUS LOCATION MOTORS MUST BE CARRIED OUT BY SKILLED PEOPLE, AND THE THERMAL PROTECTION MUST BE ALWAYS INSTALLED, EITHER INSIDE OR OUTSIDE THE MOTOR, OPERATING AT THE RATED CURRENT.

2 - Maintenance

Maintenance must be carried out by repair shops authorized by WEG.

Repair shops and people without WEG's authorization who will perform any service or hazardous location motors will be fully responsible for such service as well as for any consequential damage.



ANY ELECTRICAL OR MECHANICAL MODIFICATION MADE ON HAZARDOUS LOCATION MOTORS WILL VOID THE CERTIFICATION.

When performing maintenance, installation or relubrication, follow these instructions:

- ✓ Check if all components are free of edges, knocks or dirt.
- ✓ Make sure all parts are in perfect conditions.
- ✓ Lubricate the surfaces of the endshield fittings with protective oil to make the assembly easier.
- ✓ Use only rubber hammer to fit the parts.
- ✓ Check for correct bolts tightening.
- ✓ Use clearance calibrator for correct T-box fitting (smaller than 0.05mm).



DO NOT REUSE DAMAGED OR WORN PARTS. REPLACE THEM BY NEW ONES SUPPLIED BY THE FACTORY.

MOTORS DRIVEN BY VFD

Applications using VFD´s without filter can affect motor performance as follows:

- ✓ Lower efficiency.
- ✓ Higher vibration.
- ✓ Higher noise level.
- ✓ Higher rated current.
- ✓ Higher temperature rise.
- ✓ Reduced motor insulation.
- ✓ Reduced bearing life.

1 - Standard Motors

- ✓ Voltages lower than 440V do not require filter.
- ✓ Voltages equal or higher than 440V or lower than 575V require filter for motor power supply cables longer than 20 meters.
- ✓ Voltages equal or higher than 575V require filter for any size of power supply cables.



IF SUCH RECOMMENDATIONS ARE NOT FOLLOWED ACCORDINGLY, MOTOR WARRANTY WILL BE VOID.

2 - Inverter Duty Motors

- ✓ Check power supply voltage of the forced cooling set.
- ✓ Filters are not required.

WARRANTY TERMS
SERIES AND ENGINEERING PRODUCTS

WEG warrants its products against defects in workmanship and materials for 18 months from the invoice date issued by the factory, authorized distributor or agent limited to 24 months from manufacturing date independent of installation date as long as the following items are fulfilled accordingly:
- Proper transportation, handling and storage;
- Correct installation based on the specified ambient conditions and free of corrosive gases;
- Operation under motor capacity limits;
- Observation of the periodical maintenance services;
- Repair and/or replacement effected only by personnel duly authorized in writing by WEG;
- The failed product be available to the supplier and/or repair shop for a required period to detect the cause of the failure and corresponding repair;
- Immediate notice by the purchaser about failures occured and that these are accepted by WEG as manufacturing defects.

This warranty does not include disassembly services at the urchaser facilities, transportation costs with product, tickets, accomodation and meals for technical personnel when requested by the customer. The warranty service will be only carried out at WEG Authorized Repair Shops or at WEG´s facilities.

Components whose useful life, under normal use, is shorter than the warranty period are not covered by these warranty terms.

The repair and/or replacement of parts or components, when effected by WEG and/or any WEG Authorized Repair Shop, will not give warranty extension.

This constitutes WEG´s only warranty in connection with this sale and the company will have no obligation or liability whatsoever to people, third parties, other equipment or installations, including without limitation, any claims for consequential damages or labor costs.

Section 3.6.2

Sludge Holding Tank

REV	DESCRIPTION	DATE	BY	APP'D
0	FOR REFERENCE ONLY	02/24/22	JG	JC
1	REVISED AS PER COMMENTS	03/30/22	JG	JC
2	REVISED AS PER COMMENTS	03/31/22	JG	JC

MANUFACTURING NOTES:

1. QTY: 1 UNIT
2. MATERIAL: SS 316, 11 GAUGE FOR TANK WALL, 2" X 2" X 1/4" STRUCTURAL ANGLE
3. ALL DIMENSIONS ARE EDGE TO EDGE UNLESS OTHERWISE NOTED.
4. TOLERANCES: ANGULAR MACH. ±1°, BEND ± 1°, DECIMAL ±1.5mm OR ±1/16"
5. ALL WELDS MUST BE MIN.3/16" CONTINUOUS MIG/TIG WELDS (FLARE BEVEL WELD WHERE NECESSARY)
6. ALL WELDS MUST BE UNIFORM AND AESTHETICALLY PLEASING, CONFORM TO CWB/ASME
7. REMOVE ALL SHARP EDGES, CLEAN AND GRINDING FLAT ALL WELDINGS WHEN APPLICABLE

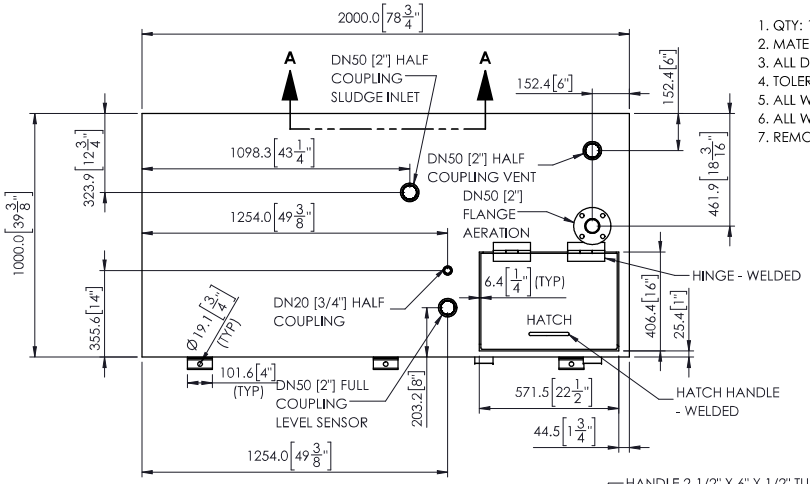

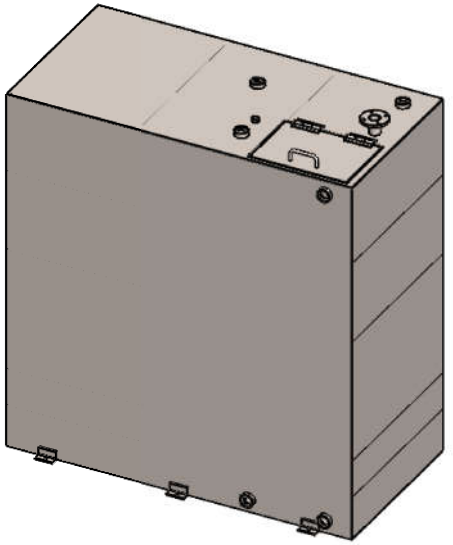

ISOMETRIC VIEW

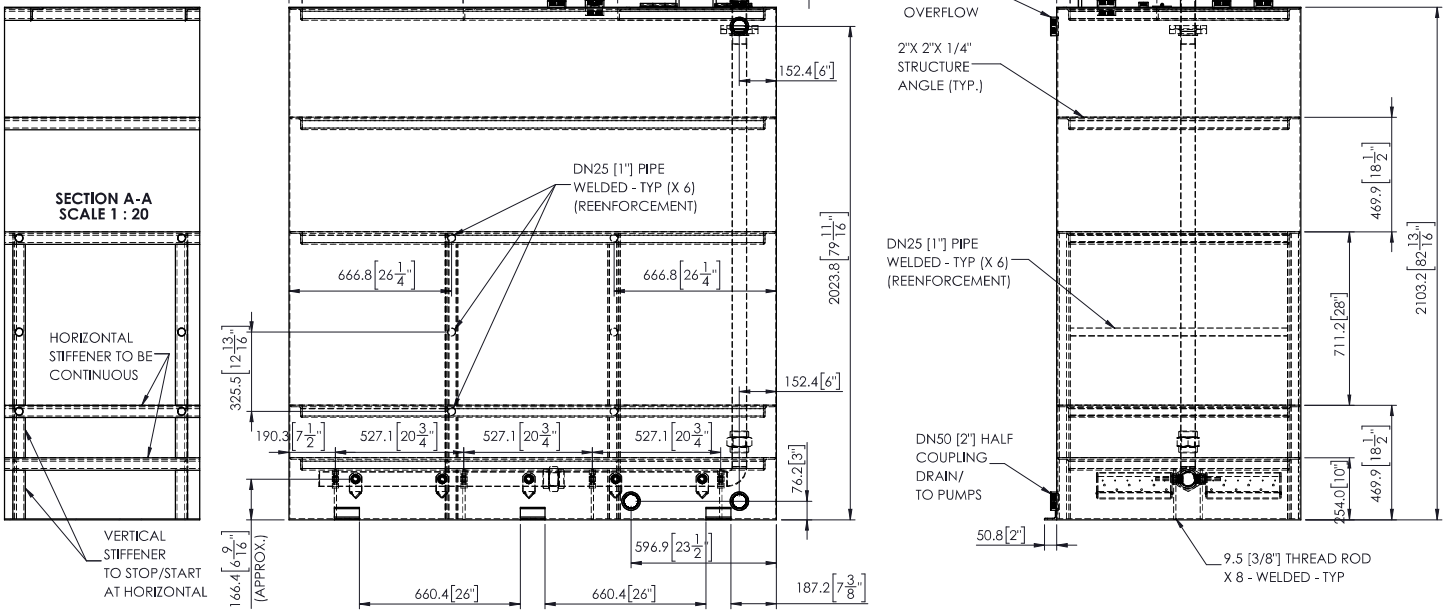

H2FLOW EQUIPMENT INC.

WATER AND WASTEWATER TREATMENT EQUIPMENT
580 OSTER LANE, CONCORD, ON L4K 2C1 CANADA
TEL: (905) 660-9775 FAX: (905) 660-9744
www.h2flow.com

THIS DRAWING IS THE PROPERTY OF H2FLOW EQUIPMENT INC. AND SHALL NOT BE COPIED OR TRANSFERRED WITHOUT THE WRITTEN CONSENT OF H2FLOW EQUIPMENT INC.

DRAWN BY	DATE	PROJECT NAME	TITLE
JG	02/24/22	EUREKA CONTAINERIZED MBBR NUNAVUT	GENERAL ARRANGEMENT - SLUDGE TANK
APP'D BY JC	DATE 02/24/22		DRAWING No. Q-28520-31-02
SCALE NTS		ALL DIMENSION ARE IN "mm" UNLESS OTHERWISE SPECIFIED	REV 2
R10	VERSION 1	APRIL 07, 2021	SHEET 1 OF 2

REV	DESCRIPTION	DATE	BY	APP'D
0	FOR REFERENCE ONLY	02/24/22	JG	JC
1	REVISED AS PER COMMENTS	03/30/22	JG	JC
2	REVISED AS PER COMMENTS	03/31/22	JG	JC

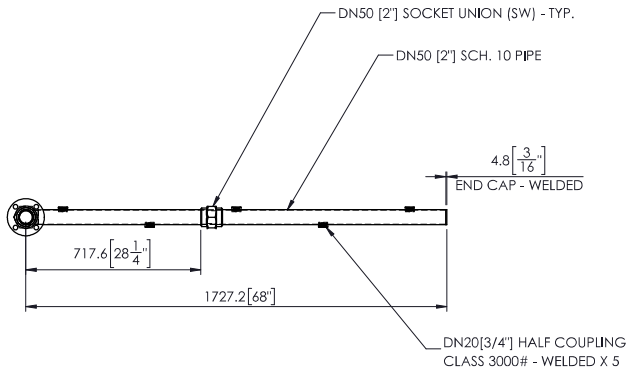

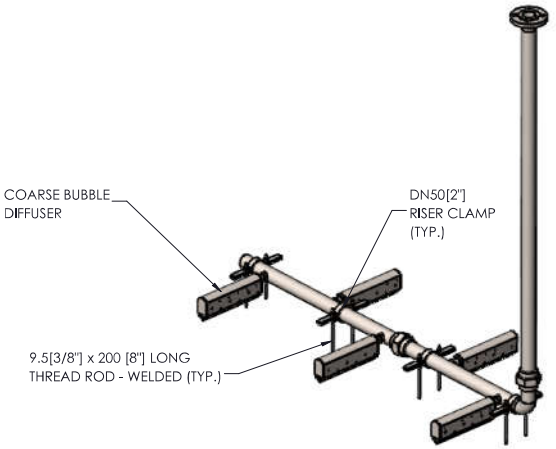

AERATION ASSEMBLY ISOMETRIC VIEW

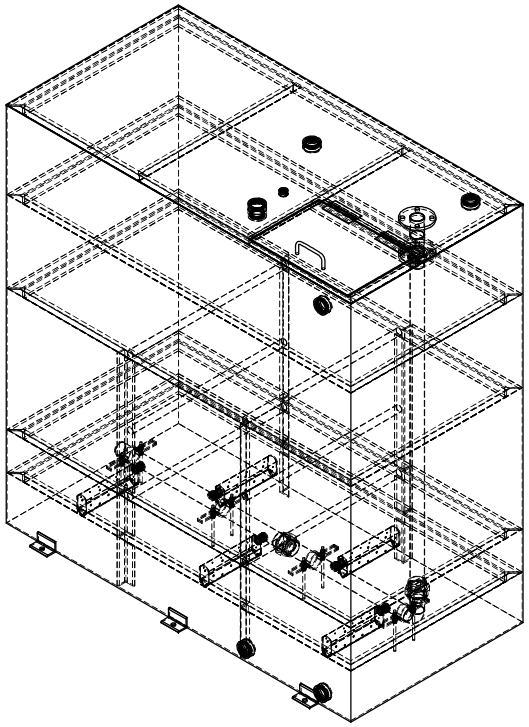

SLUDGE TANK ISOMETRIC VIEW

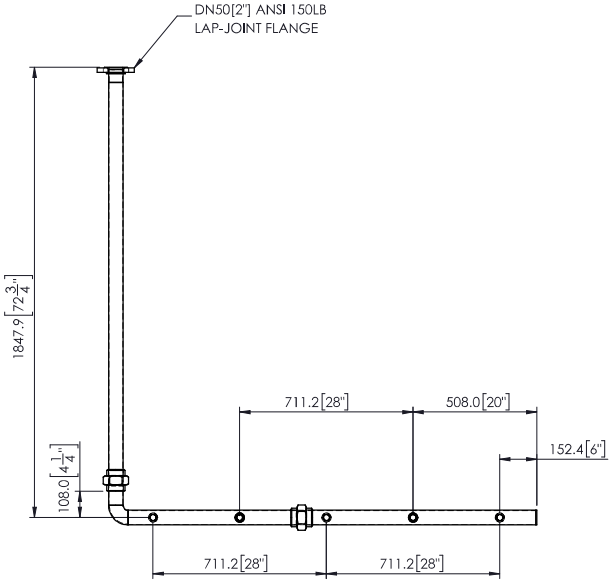

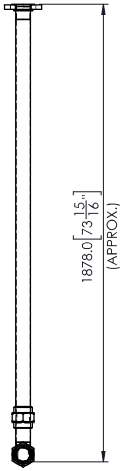

H/FLOW EQUIPMENT INC.

WATER AND WASTEWATER TREATMENT EQUIPMENT
560 OSTER LANE, CONCORD, ON L4K 2C1 CANADA
TEL: (905) 660-9775 FAX: (905) 660-9744
www.h2flow.com

THIS DRAWING IS THE PROPERTY OF H2FLOW EQUIPMENT INC. AND SHALL NOT BE COPIED OR TRANSFERRED WITHOUT THE WRITTEN CONSENT OF H2FLOW EQUIPMENT INC.

DRAWN BY	DATE	PROJECT NAME	TITLE
JG	02/24/22	EUREKA CONTAINERIZED MBBR NUNAVUT	GENERAL ARRANGEMENT - SLUDGE TANK
APP'D BY: JC	DATE: 02/24/22		DRAWING No.: Q-28520-31-02
SCALE: NTS		ALL DIMENSION ARE IN "mm" UNLESS OTHERWISE SPECIFIED	REV: 2
			SHEET 2 OF 2

R10 VERSION 1 APRIL 07, 2021

Section 3.6.3

Sludge Holding Tank Transfer Pumps

Pumps
Business Unit

Operating and Maintenance Instructions



NETZSCH Canada, Incorporated
500 Welham Road
Barrie, Ontario L4N 8Z7
Tel: (705) 797-8426
Fax: (705) 797-8427
Toll: 866 683-7867

www.pumps.netzsch.com

WARNING!!!!

When **Variable Frequency Drives (VFD's)**
are being used to vary the speed of the
NETZSCH Progressing Cavity Pumps, then they
MUST be CONSTANT TORQUE VFD's.

How the pump works

NETZSCH Progressing Cavity Pumps operate at a constant torque requirement for a specific operating pressure. The speed of the pump does NOT affect the torque requirement. **For example:** a pump running at 60psi output pressure at a speed of 200 revolutions per minute requires the same toque input as if it were running at 60psi output pressure at a speed of 600 revolutions per minute. The only exception to this rule is during pump startup; at the moment the pump starts the motor must provide more torque than the pump requires when it is running. This is due to the force of static friction that the motor must overcome in order to begin rotation. Although this is only a momentary force, enough torque has to be available to break the static load.

How the VFD works

Variable Frequency Drives work by taking the supplied power and modulating the supplied power frequency in linear proportion to the supplied voltage. This proportional modulation allows the motors speed to be altered without the motor drawing too many amps and burning out. A VFD can be built to perform this modulation in one of two ways. The VFD can be set to modulate the frequency above the normal supplied 60HZ frequency allowing the output to provide a constant amount of power but the torque will drop off as speed is increased **(THIS IS A CONSTANT HP VFD**) or it can modulate the frequency below the normal supplied 60HZ frequency allowing the output to provide constant Torque but the power will decrease as the speed is reduced **(THIS IS A CONSTANT TORQUE VFD).** This relationship is shown in the detail below. The manufacturers of VFD's typically offer two service factors. Normal Duty; which

has an overload capacity of the VFD's full load ampere rating times 110% - 120% for one minute and Heavy Duty; which has an overload capacity of the VFD's full load ampere rating times 150% for one minute. Typically, constant Hp VFD's are sold with a Normal duty rating since the applications don't call for high starting torque which causes amp draw to spike. Constant torque VFD's are usually sold with heavy duty ratings so that they can supply elevated startup amp draws for high starting torque applications.

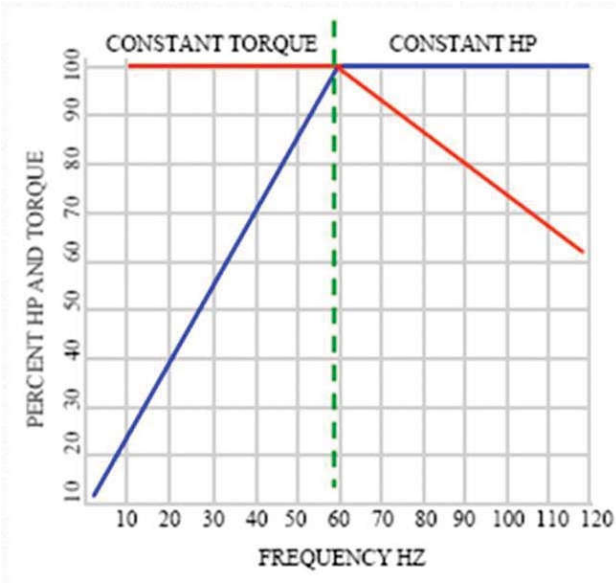

VFD Speed Torque Characteristics

Blue = Horsepower
Red = Torque
Green = Motor Nameplate Frequency (60 Hz)

In Constant Torque Area - VFD supplies rated motor nameplate voltage and motor develops full horsepower at 60 hertz base frequency.

In Constant Horsepower Area - VFD delivers motor nameplate rated voltage from 60 Hertz to 120 hertz (or drive maximum). Motor horse-power is constant in this range but motor torque is reduced as frequency increases.
Note: Motor HP = Torque x RPM

Application:

Because while running a progressing cavity pump the torque value required by the pump is fixed; any reduction in supplied torque as a result of operational speed could cause the pump to fail. Also, depending on the running speed required, a constant HP VFD may not be capable of supplying the torque needed for pump startup. This is the reason a **Constant Torque** VFD **MUST** be used to operate a progressing cavity pump.

	TABLE OF CONTENTS	PAGE 0.0

		Page
1	Safety Precautions	1.0
2	Description	2.0
3	Packing, Transportation, Storage	3.0
4	Installation Instructions	4.0
5	Start-up	5.0
6	Temporary Shutdown	6.0
7	Maintenance	7.0
8	Trouble-Shooting and Remedying	8.0
9	Dismantling and Assembly of the Pump Housing	9.0
10	Dismantling and Assembly of the Rotating Parts	10.0
11	Removal and Fitting of the Connecting Shaft	11.0
12	Dismantling and Assembly of the Shaft Sealing	12.0
13	Dismantling and Assembly of Special Units	13.0
14	Recommended Stock of Wear Parts	14.0
15	List of Spares and Sectional Drawing	15.0
16	List of After-Sales Service Centres	16.0

Remark: Because of data transfer the text sheet printouts of our operating instructions do not contain a personal signature.

1 Safety Instructions

This manual contains basic instructions which must be observed when installing, operating and servicing the machine / equipment. It is essential therefore for the user / installer or responsible technician to read the manual thoroughly prior to installation and operation.
A copy of the manual must always be at hand where the machine / equipment is being used. In addition to the general safety instructions listed in this main section on safety, it is necessary to observe the special safety rules included in other sections of the manual, eg. for private use.

1.1 Safety Signs

The signs below are printed in the manual as general hazard / danger symbols to mark those safety instructions whose non-observance can result in danger to personnel or to the machine / equipment. These signs are:



Hazard sign DIN 4844 - W9
Danger to general public

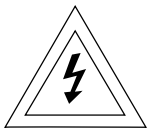

Hazard sign DIN 4844 - W8
Risk of electric shock

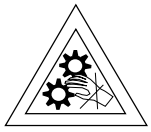

Risk of injury from machinery



Danger from suspended loads

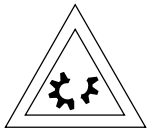

Damage to machinery



Risk of injury to your eyes: goggles required.

Continued Page 1.0R

Warning plates located directly on the pump/ equipment showing for example the correct direction of rotation or the fluid connections used must always be observed and kept completely legible.

1.2 Personnel Qualifications and Training

Operating, maintenance, inspection and installation staff must possess the correct qualifications for their work. Areas of responsibility, scope of authority and staff supervision must be exactly defined by the user. If personnel do not have the necessary knowledge they must receive due training and instruction. If necessary, the user of the machine / equipment can arrange for such training and instruction to be provided by the manufacturer / supplier. The user must also make sure that the content of the manual is fully understood by the staff concerned.

Responsibilites

All work on and operation of the pump/ equipment should be carried out by trained/ competent and qualified operators, tradesmen and / or engineers as appropriate.

Any person responsible for or in charge of

– **working with lifting gear** and ropes when moving a pump / equipment will have to be duly instructed prior to doing the transportation job;

– **mounting a drive** to a pump / equipment must be qualified / trained as an industrial mechanic / technician;

– **setting up installations into a plant** must be qualified / trained as an industrial mechanic/ technician and must be familiar with the design and functioning of the plant in which the pump / equipment is being installed;

– **doing work on starting up, operation and maintenance** must gain knowledge of the pump / equipment principle prior to performing such works and must study the safety instructions and the manual thoroughly;

– **doing repair works**, and prior to doing such works, must be trained and skilled in the job. He must have due knowledge of the pump/ equipments specific details set up in the repair instructions. Unskilled personnel must be trained and repair works checked.

1.3 Dangers arising from Non-Observance of the Safety Instructions

Non-observance of the safety instructions can result in danger to personnel as well as to the environment and the machine. Non-observance of the safety instructions can result in the loss of claims for compensation.

Non-observance of the safety instructions can have, for example, the following consequences:

▲ Failure of essential functions of the machine / equipment

▲ Failure of mandatory maintenance and servicing methods

Continued Page 1.1

- ▲ Danger to personnel from electricity, machinery and chemicals
- ▲ Danger to the environment from leakage of hazardous substances.

1.4 Safety Conscious Working

In addition to the safety instructions listed in the manual, it is essential to observe the national accident prevention directives currently in force and any of the users own internal regulations concerning work and safety.

1.5 Safety Instructions for the User / Operator

- ▲ If there is a risk of danger from any hot or cold machine component, the user must fit protective guards to prevent such components from being touched (according to Standard EN 563).
- ▲ Protective guards fitted to prevent contact with moving parts (eg. couplings) must be in position when the machine / equipment is in use.
- ▲ Leakages (eg. from a shaft seal) of hazardous materials (eg. explosive, toxic, hot material) must be discharged in such a way that neither personnel nor the environment are placed at risk. Legal directives must be observed.
- ▲ All possible danger from electricity must be eliminated (for details see eg. the regulations of your local power supply company).

1.6 Safety Instructions for Maintenance, Inspection and Installation

The user must ensure that all maintenance, inspection and installation work is carried out by authorized and qualified personnel who understand the operating instructions and are adequately trained.

Work on a pump / equipment must only be carried out with the machine stopped and electrical power supply turned off. The pump/ equipment must not be under any pressure and must have cooled off. All procedures detailed in these operating instructions on the stoppage of the machine must always be adhered to.

Pumps / equipment which convey harmful media must be decontaminated.

Immediately after the maintenance work is finished all safety devices and guards must be re-installed and the safety trips must be tested.

Before putting the machine back into operation the points detailed in section "Start-up" should be observed.

Continued Page 1.1R

1.7 Unauthorized Modifications and Manufacture of Spares

Modifications or changes to machines / equipment are only permissible with the manufacturer's agreement. Original spare parts and accessories authorized by the manufacturer ensure safety.
The use of other components revokes any liability for consequences which may result.

1.8 Improper Application

Delivered machinery / equipment is only guaranteed safe for the use specified.

This machine / equipment was designed in accordance with the prescribed conditions of use.
The limits of use are laid down in the conditions of use and should in no way be exceeded.

1.9 Specific Points for the Use of a NEMO® Pump

A NEMO® pump must be used for the **purpose only** for which it was sold.

If you change or wish to change the process medium, you must check with either the supplier or manufacturer that the pump is suitable for the new medium. This is especially important with aggressive, poisonous or otherwise hazardous substances.

Pump criteria include:

1. Compatibility with the medium
2. Suitability for seal design / material, especially the shaft seal
3. Resistance to pressure and temperature of the medium.

Please note that NEMO® pumps are progressing cavity pumps and as such can generate very high pressure.

A blockage or the chance closure of a valve in the discharge line can cause a pressure rise **manifold as high as can be tolerated by the installation**. This can result in the bursting of pipes, which must be avoided especially in the case of dangerous media.

Corresponding safety equipment must therefore be installed, for example an emergency stop button, a pressure relief valve with return pipe or a bursting disc.

During maintenance and repair work on the pump please note the following:

1. Ensure that the pump drive **can not** be turned on without authorization.
2. When opening the pump follow the instructions for handling the medium (eg. protective clothing, no smoking etc).
3. Before putting the pump back into operation ensure that all guards and other safety devices (eg. drive–belt protection, coupling protection) are properly re–installed.

Continued Page 1.2

1 SAFETY PRECAUTIONS

Always bear in mind your safety during operation, maintenance and installation of equipment. Please adhere to the EC-Directive for machinery including the national regulations and follow the US OSHA regulation #1910.219 & 1910.147 titled Mechanical Power transmission apparatus as well as the European Standard EN 292 with the accidents prevention rules laid down by the trade unions and other appropriate technical institutions.

Always bear in mind your safety during operation, maintenance and installation of equipment. Please adhere to the EC-Directive for Machinery including the national regulations and follow the European Standard EN 292 with the accident prevention rules laid down by the trade unions and other appropriate technical institutions.

Continued Page 1.2R

1.10 Notes on Inspection and Repair

The legal regulations for safety at work, such as regulations for the workplace, regulations governing dangerous materials, accident prevention, environmental protection eg. regulations on disposal and water balance obligate all commercial business to protect their employees and / or people and the environment from adverse effects caused by contact with dangerous materials.

Important:

Inspection / repair of machinery and its parts only takes place when a safety conformity certificate has been completed by an authorized and qualified specialist. Please use a copy and leave the original in the operation and maintenance manual.

Where special safety precautions are necessary in spite of careful emptying and cleaning of the machinery, the necessary information must be given.

Machinery operating with radio-active media will only be repaired or inspected by one of our specialist engineers under the safety of the owner.

The safety conformity certificate is part of the inspection / repair service. We reserve the right to refuse acceptance of this order / service for other reasons.

Continued Page 1.3

1.11 Instructions concerning explosion protection

The instructions below are to be considered and kept to when using pumps in potentially explosive areas in order to guarantee durable explosion protection of the pumps and avoid any danger of ignition.

In accordance with the regulations 94 / 9 / EC, the pumps are admitted for use in the area II 2G IIB T 4 or II 2G IIB T 3
(pls. see manufacturer's declaration or declaration of conformity).

It is to be taken into account that in case of aggregates the components (e.g. gears, couplings) mounted on the pumps must comply with the regulations 94 /9 / EC as well. The relevant documentation concerning these components is to be considered.
The application area of aggregates is determined by the application area of the mounted component with the lowest approval and thus may deviate from the allowed application area of the pump.

Temperature category	Max. temperature of the conveying product
T 4	100 °C
T 3	165 °C
T 2	265 °C
T 1	415 °C

The maximum conveying product temperatures apply when mechanical seals of Messrs. Burgmann with **carbide – carbide** and **carbide – carbon** as sliding material combinations are used.
In the case of other manufacturers or other sliding material combinations it is necessary to consult the manufacturer.

1. **Assembly and repair in potentially explosive areas**

   When performing assembly and repair work, it is to be seen to it that no dangers of ignition arise especially during heating up the pump parts. This means e.g. heating up by explosion-proof heating devices or exclusively in non-explosive areas. The temperature of the heated part and the ignition temperature of the materials by which the danger of explosion may be caused are to be considered.

2. **Dry-running protection**

   Under no circumstances is the pump to run dry.
   The pump is to be equipped with an appropriate dry-running protection device.

Continued Page 1.3R

The device for dry-running protection should be self-regulating.
This means that this device can give alarm signals and/or switch off the pump also in case of failures in its own control system.

Dry-running protection concerning stationary immersion pumps (with mounting plate)

Operation is only permitted with redundant or self-regulating automatic devices to guarantee dry-running protection as well as to control the pump capacity.

Dry-running protection concerning movable immersion pumps (drum pumps)

The filling with liquid during the operation is to be ensured by specific requirements of behavior:

- Drum pumps may only be introduced in and removed from the container in switched-off condition
- Drum pumps, after being introduced in the container to be discharged, may only be started after they have immerged in the fluid.
- Drum pumps are to be switched off before they run dry or are to be switched off at once when specific noises ("slurping" or speed rise) suggest that dry running may or will immediately occur.

3. **Overpressure protection**

   The pump must not be loaded over the maximum allowable pressure.
   The pump is to be equipped with an appropriate overpressure protection device. The pump must not convey against a closed slide valve.
   The overpressure protection device should be self-regulating.

4. **Drives**

   The drives must be adjusted to the performance of each pump.
   In the case of a blocking of the pump, the drives must be turned off automatically by means of a motor protection unit.

5. **Alignment of the drive (concerning the pump types SY / SH / SA / SO / SF / SP)**

   It is absolutely necessary that the drive be aligned within the maximum allowable tolerances. Incorrect alignment causes damage to the seals and the shaft bearings.

6. **Potential equalization concerning immersion pumps**

   The immersion pumps are to be integrated in the potential equalization of the installation. Hand-operated movable immersion pumps are to be grounded before being introduced in the container.

Continued Page 1.4

The connection to ground is to be maintained until the pump has been completely pulled out of the container.
There must not be any potential difference between the pump and a conductive container. This means that container and pump are to be connected at a common grounding point and thus be conductively connected with each other.
(see information brochure "Statische Elektrizität, Zündgefahren und Schutzmaßnahmen" (Static electricity, dangers of ignition and preventive measures); Publisher: "Internationale Sektion für die Verhütung von Arbeitsunfällen und Berufskrankheiten in der chemischen Industrie der IVSS" (International section for the prevention of employment accidents and occupational diseases in the chemical industry of the ISSA (International Social Security Association)) , Heidelberg 1995).
The hand-operated movable immersion pumps are to be provided with an indication referring to the grounding measure (pay attention to grounding).

7. **Potential equalization concerning all other pump types (no immersion pumps)**

   All conductive parts of the pump are to be integrated in the potential equalization of the pumping set unless the conductive connection to the ground potential is guaranteed by the drive or connecting shafts or otherwise.

8. **Stator**

   The stator is to be regularly checked for wear. When the allowable wear limit is reached, the stator is to be replaced. Before exchanging the conveying product, the pump operator has to consult the manufacturer concerning the durability of the stator unless the stator has already been confirmed for the intended application.

   Inspection and maintenance interval of the stator:
   - **in the case of an operating time of > 16 h/day, at least twice a year**
   - **in the case of an operating time of < 16 h/day, at least once a year.**

9. **Joints / joint lubrication**

   The sealing and the lubrication of the joints are to be regularly checked. If necessary, the seals and the lubricants are to be replaced.

   Inspection and maintenance interval of the joints:
   - **in the case of an operating time of > 16 h/day, at least twice a year**
   - **in the case of an operating time of < 16 h/day, at least once a year.**

10. **Inspection after initial startup**

    The aspects relevant for ensuring the explosion protection (such as lubrication and wear check) are to be checked six months after the initial startup of the pump at the latest.

Continued Page 1.4R

11. **Shaft bearings**
(concerning the pump types SY / SH / SA / SO / SF / SP)

Replacement of the bearings after 14,500 operating hours (according to prEN 13463-5: replacement after 90 % of the designated service life).

12. **Materials**

Although being allowed as material for the pumps, aluminum should be avoided in potentially explosive areas.
The pumps may only be used if, under the particular operating conditions, the materials are resistant to mechanical and/or chemical influences or corrosion such that the explosion protection will be maintained.

13. **Noise development**
(concerning the pump types SO / BO / SF / BF / SP / BP)

As soon as unusual noises (such as knocking or rubbing) are realized, the pump is to be switched off. The cause of the failure is to be eliminated before the pump is reoperated.
Regular check of the paddle equipment.

14. **Direction of flow of immersion pumps**

The direction of flow of immersion pumps always has to be from the end connection piece to the pressure nozzle at the top. The reverse direction of flow is not allowed.

15. **Mechanical seal of immersion pumps**

Before the initial startup and after a prolonged shutdown, the mechanical seal is to be lubricated from outside before the pump is started. In this connection, the compatibility of the lubricant with the sealing material is to be considered.

16. **Impurities in immersion pumps**

Especially in the case of hand-operated movable immersion pumps it is to be seen to it that no impurities can get into the pump. The pumps are to be deposited only on clean and solid ground or else to be suspended. In case of unusual noises or power losses, the immersion pumps are to be switched off immediately.

17. **Gland**

If a gland packing is applied it has to be observed that the permitted temperature corresponding to the temperature category is not exceeded. Recommendation: fasten the screws of the stuffing box gland only with low torque (approx. 5 Nm).

Continued Page 1.5

Safety Conformity Certificate

The machinery and its accessories together with this safety conformity certificate relating to repair / inspection services given to the undersigned by ourselves

Machine Type .....
Number .....
Delivery Date ..... Delivery Note No. .....

was carefully emptied and cleaned both inside and out in preparation for shipment
☐ yes
☐ no

Special safety precautions with regard to health or media endangered by water are to be implemented
☐ necessary
☐ unnecessary

The machinery is set up to transport materials dangerous to health or water and came in contact with media containing harmful substances
☐ yes
☐ no

The following safety precautions are necessary with regard to irrigation media, overflow liquid and waste management:

.....

.....

We confirm that the above mentioned details are correct and complete and that despatch will follow in accordance with the legal requirements:

Company ..... Telephone .....
..... Fax .....
..... Telex .....

Address

.....

.....

Name ..... Position .....

....
Date Company Stamp / Signature

2 Description

The NEMO® pump is a progressing cavity pump.
The main components which determine the system discovered by Professor René Moineau are a rotating part, called the rotor and a static part, called the stator.
The rotor is a helical screw with an extremely large pitch, large thread depth and small centre diameter with round cross-section for 1/2-geometry and elliptical cross-section for 2/3-geometry. The stator has a two start or resp. 3 start thread and is double or resp. 1.5 the pitch length of the rotor. This provides space for the medium between the rotor and stator. When the rotor turns round inside the stator the medium moves continuously from the inlet to the outlet.

The universal NEMO® pump system unifies many positive characteristics of other pump types:

- Like centrifugal pumps NEMO® pumps have no suction or pressure valves, but do have a stable flow rate in proportion to the number of revolutions.
- Like piston pumps NEMO® pumps have a suction capability of up to 8.5 m vacuum metric.
- Like membrane and peristaltic pumps the NEMO® pump can transport every type of inhomogenous, gaseous and abrasive media, as well as those that are not of a liquid consistency or contain solids and/or fibrous material.
- Like gear pumps and screw pumps the NEMO® pump is capable of coping with high medium viscosities.
- Like piston, membrane, gear or screw pumps the NEMO® pump can perform dosing operations.

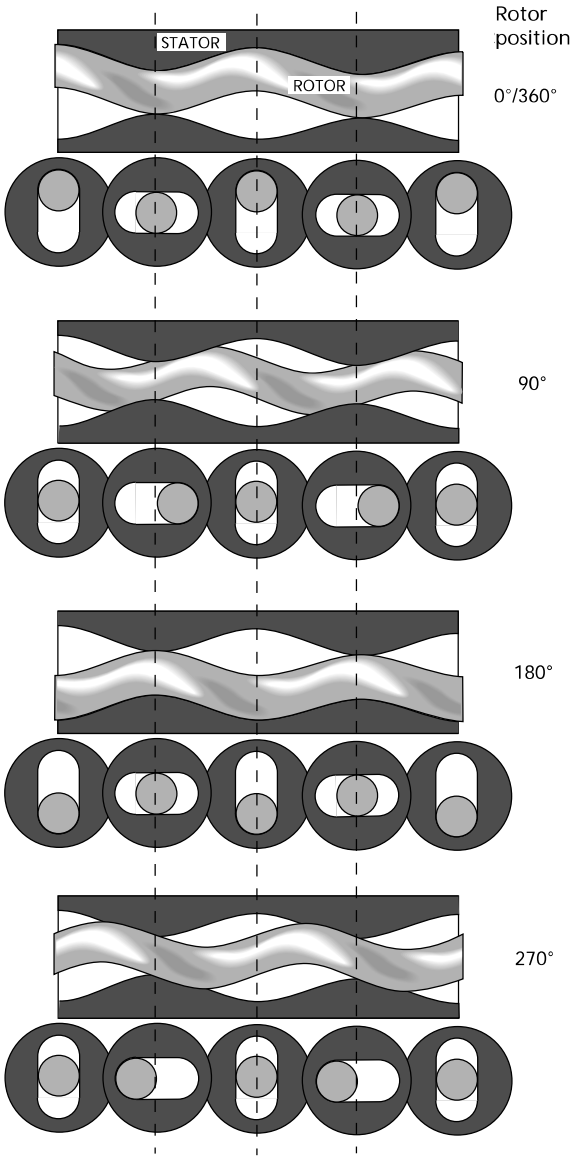

Length and cross-sections through the rotor and stator with 1/2-geometry during a rotation.

Continued Page 2.0R

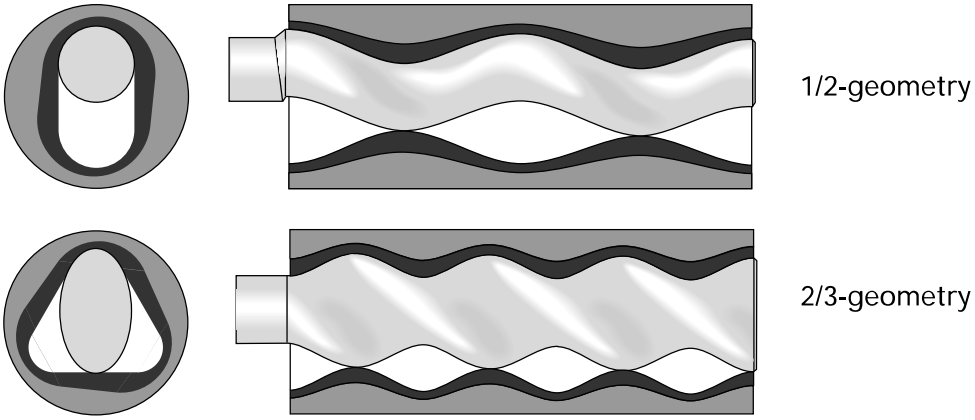

Length and cross-sections through the stator with rotor
with reduced stator wall thickness

2.2 General Data

Noise emissions:

The maximum permitted noise emission level at a work place is 70 dB (A).

The noise level was measured in accordance with DIN Standard 45635-24-01-KL2 to assure that the pump does not exceed 70 dB (A).

Noises generated by the drive and pipes are not included in the above emission value.

A prerequisite for the noise emission level of ≤ 70 dB (A) is that the pump is operated in a cavity free regime and is bolted to a concrete base.

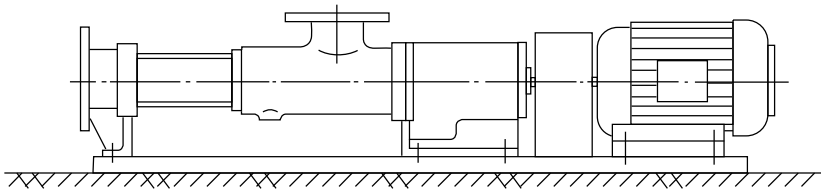

3 Packaging, Transportation, Storage

3.1 Packaging and Transportation

NEMO® pumps are shipped in railroad containers or crates unless the customer specifies otherwise.
The packings are labelled and symbols give the handling instructions in accordance with DIN 55402.
On receipt check for any transport damages.
Transport damages should be reported to the transporter immediately.
The pumps should be transported as closely as possible to the location of installation and only there should they be uncrated.

Uncrated horizontal pumps should be lifted by using a shackle which can be attached to the baseplate. The bolt holes of the frame or the lifting lugs attached to the baseplate could be used as shown on the installation drawing.

Vertical pumps should be lifted by using the bolt down holes, lifting lugs or shackles attached to the baseplate. This is shown on the installation drawing. For most applications, the drive is mounted on top of the pump.



Be careful when lifting top heavy pumps. The centre of gravity may be above the points where the lifting gear is attached to. If the case, secure additionally against tipping over!

Vertical pumps should not be deposited unless they are secured vertically. **Hazards of tipping!** Deposit only in horizontal position!



It is essential to avoid that the total pump unit be suspended with eye bolts of the motor or gear box. These eye bolts should be used for lifting the motor and/or the gear box **only.**

The Accident Prevention Rules, Section 18.4 relating to lifting accessories for the lifting of loads (VBG 9a) must be strictly adhered to.

Because of the variety of possible pump designs and applications, only general instructions can be given here. These should be good enough for experienced assemblymen or transportation experts.
When in doubt, please ask for detailed information on the pump unit concerned.

Continued Page 3.0R

When moving the pump or unit on **wheels** strictly attend to the following:

- Pad lock the motor drive and secure against unintended starting up.
- Move the pump unit carefully and slowly, especially where the ground is uneven. **Hazards of tipping!**
- Ensure a stable position of the pump or unit at the operating/storage place and secure it by actuating **all** clamping devices on **all** the wheels or rollers against voluntary moving away.
- Where fitted loosely, carefully watch the pipe bends when pumping. **Power of repulsion!**
- Where necessary, secure the pump unit additionally with support blocks.

3.2 Storage

The pumps are preserved for transport unless specified otherwise.
In cases of longer storage the pumps should be handled as follows until installation:

- **Stator:**

If the pump is not to be used immediately, then the elastomer along the contact line between rotor and stator may become permanently distorted (compression-set). This will increase the break away torque. Therefore, the stator should be removed and kept separately in a clean, cool and dry environment.
Standard DIN 7716 summarizes detailed information on the storage of rubber products, some of which is gathered here, and the following notice applies to a storage for a period of up to six months.

General

Most of the rubber products may change their physical properties under unfavourable conditions or if treated improperly, which will result in a shorter lifetime.
Or they may become useless through excessive hardening, aging, regenerating or permanent deformation, also because of blistering, cracking or other damages appearing on the surfaces.
The changes may occur under the influence of oxygen, ozone, heat, light, humidity, solvents or because of storing the products under tension.
If stored and treated properly, the rubber products will keep their properties, even over a long period of time (some years), almost unchanged.
This does, however, not apply to uncured rubber compounds.

Continued Page 3.1

Store room

The environment in which rubber products are being kept must be cool, dry, free of dust and rather airy, and they must not be stored in the open, not even in a weather sheltered space.
Rubber products should be kept in surroundings not having less than minus 10 °C and not more than plus 15 °C.
Store rooms should not be damp, and it must be ensured that there will be no condensation.
Most favourable is an environment offering a relative humidity under 65 %.
Rubber products must be protected against light, particularly direct sunlight or artificial light when having a high UV portion.
They should furthermore be kept away from ventilation, especially draught, by wrapping them up.
As ozone is very aggressive and harmful there should be no store room used which houses equipment likely to produce ozone, e.g. electric motors or other equipment which might bring about sparks or other electrical discharges.
There must be no solvents, oil, grease, lubricants or any chemicals kept in a store room.

- **Rotor**

  Please support with wooden blocks and cover up against harm from mechanical impact.
  For rotors of RCC (material number 1.2436):
  coat the surfaces with protective grease to avoid rusting.

- **Shaft Sealing by packing gland**

  Remove the gland and coat the exposed shaft surface with grease.

- **Pump parts in stainless steel**

  No grease coating necessary.

- **Other, non-coated pump parts**

  Protect with grease.

- **Drives**

  Please observe the drive supplier's instructions.

4 Mounting and Installation

If the NEMO® pump was stored and the rotor grease protected: Remove the grease before installing the stator. Clean the rotor thoroughly in order to avoid unsuitability of the grease with the stator material and the pumping medium.

Screw the pump at all fixing points (bearing housing / drive stool, end stud, support feet) using all fixing bores securely down to the sub-structure (ground plate, machine frame, foundation etc.).

4.1 Direction of Rotation

The direction of rotation of the pump is given on the model plate and in the order confirmation. The direction of delivery of the NEMO® pump is a function of the direction of rotation.

Changes must be agreed upon and confirmed by the supplier.

4.2 Pressure

If not explicitly confirmed otherwise in the order confirmation, the **maximum permissible pressure (e.g. when turning clockwise) inside the pump housing (A)**

– for models with pump housing of cast iron 6 bar

– for models with welded pump housing 10 bar.

The maximum permissible pressures inside the end flange (B) is a function of the design applied for connections

- with flange: maximum nominal pressure (e.g. PN 16)
- with threaded internal socket: maximum 25 bar
- with DIN 11851 "dairy" thread up to DN 100 for one or two stage pumps: max. 12 bar, for multi stage pumps: max. 25 bar
- for other versions: maximum permissible pressure of the socket connection, but not more than 6 bar per pump stage, depending on the stator installed.

4.3 Piping System

- Arrange suction and pressure pipes so that when the pump is not running, the medium is still present before and after the pump. Sufficient media should remain inside in order to lubricate the pump during restart.

Continued Page 4.0R

4 INSTALLATION INSTRUCTIONS

■ The installation of a removable distance piece between the end flange (B) and the pipe work is recommended in order to make the dismantling of the stator easy. The distance piece (see sketch) needs to have a minimum "ABL" disassembly length the values of which are shown in the table below, depending on the pump size and the number of stages.

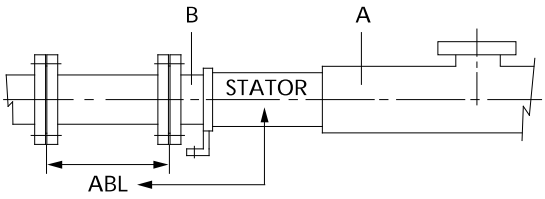

Disassembly length ABL in mm:

Pump size	Number of stages			
	1 *)	2	3	4
0 1 5	90	160	230	310
0 2 1	130	230	340	450
0 3 1	170	310	450	590
0 3 8	230	430	630	830
0 4 5	270	500	730	960
0 5 3	320	600	880	1170
0 6 3	370	690	1010	1330
0 7 6	420	800	1170	1540
0 9 0	500	950	1390	1840
1 0 5	630	1180	1740	-
1 2 5	740	1400	-	-

*) for one stage pumps with L or P geometry the ABL values of 2 stage pumps are valid

Continued Page 4.1

Type key

Example: NM 090 BY 02 S 12 B

- Internal
- **Pump size**
- Type
- Model
- **Number of stages**
- Geometry
- max. permissible pressure difference
- anti–clockwise
- Joint

The disassembly length "ABL" is also shown in the arrangement drawings in accordance with our Standard QSH V - TB 01 - 002.

- Clean the pipe work and rinse thoroughly before installing the pump.
- Connect the pipe work ensuring that no external stress attacks the pump body. The installation of compensators between the pump and the pipework is recommended:
  - No risk of damage to the pump housing from pipelines "resting" on the pump.
  - No risk of damage to the pump housing through vibrating pipelines.
- The twisting loads (F_x, F_y, F_z) and bending loads (M_x, M_y, M_z) permitted to be put on the suction/discharge flange comply with the requirements of API 676 and exceed the requirements of EN ISO 14847. They are shown in the table below.

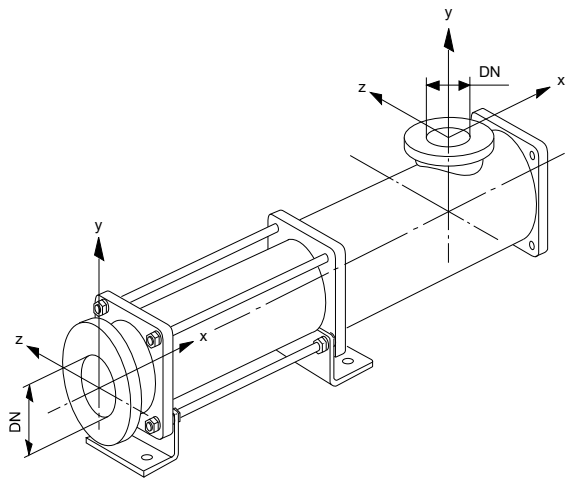

Continued Page 4.1R

Pump type NM	Standard nominal diameter DN	F_x, F_y, F_z N	M_x, M_y, M_z Nm	
015 021	(32) G 1¼"	550	(300)	Screwed joints must not be charged with loads which may result in tightening or loosening these joints
31	50	780	420	
38	65	990	530	
45 53	80	1160	620	
63	100	1490	800	
76	125	1820	980	
90 105	150	2190	1180	
125	200	2850	1530	

4.4 Shaft Sealing

- Where applicable, ensure that adequate supply lines for the buffer, flushing or quenching fluid for the shaft seals are connected **before** the pump is put into **operation**.
  For more details see Section 7.4!

4.5 Electrical Connection



All work relating to electricity shall only be made by **authorized and qualified personnel** and it should be in compliance with the requirements of the relevant national regulations!

In particular for control systems should the latest version of the **EC-Directive for Machinery 98/37/EEC, Annex I, Section 1.2 Controls** be carefully observed!

Note for frequency converter operation:
It is absolutely necessary to connect the PTC-resistors of the drive in case of frequency converter operation to protect the drive against overheating.

5 Start-up

The NEMO® pump design requires strict attention to the following:



Never run the NEMO® pump dry!
A few rotations in dry condition
will damage the stator!

- Before starting up for the first time, fill the pump with medium.
  In the case of high viscosity media fill with a liquid.
  Pump priming is vital to ensure lubrication of the rubber stator.
  Fill the piping on the pump suction side.
  In anti–clockwise rotation only: Fill the pump housing.

The NEMO® pump is a progressing cavity pump which can produce pressures that may cause the bursting of vessels or pipes.



The power transmission train (shaft, coupling rod, joints, rotor) of the pump may be overloaded thus resulting in damage or breakage.

Also the pump housing parts with their connections may be overloaded and break. There is a table in Section 4 of these Maintenance and Operating Instructions showing the pressure resistance of the pump housing parts.



Never run the pump against a closed inlet or outlet valve!

- **Open valves and vents before starting the pump!**
- **Check the direction of rotation by briefly switching on the pump motor.**

DETERMINING WHEN TO LOCKOUT

Having performed a hazard analysis on your company's equipment, you can now determine when machines must be locked out – i.e., when employees are exposed to injury from each (or any) of a machine's hazardous energy sources during servicing or maintenance activities. To do this, use your Hazard Analysis Checklist and the "Four Key Questions for Lockout Implementation."

OSHA Requirements

OSHA rules state that equipment must be locked out during equipment servicing and maintenance whenever employees are exposed to injury from unintentional machine movement or startup. According to OSHA's regulations, servicing or maintenance procedures that require lockout include:

"Workplace activities such as construction, installing, setting up, inspecting, modifying, and maintaining and/or servicing machines or equipment. These activities include lubrication, cleaning, or un-jamming of machines or equipment and making adjustments or tool changes, where the employee may be exposed to the unexpected energization or startup of the equipment or release of hazardous energy."

In addition, lockout is required during any machine service or maintenance that requires an employee to:

- Remove or bypass a safety device; or
- Place any part of his or her body into a point of operation or similar danger zone during a machine's operating cycle.

Routine, Repetitive Activities

Routing and repetitive servicing procedures that take place during normal production operations, such as minor tool changes and adjustments, do not require lockout tagout, as long as the work is performed using "alternative measures which provide effective protection." These "alternative measures" include safeguarding methods approved by OSHA and ANSI (American Standards Institute) to protect operators, such as:

- Presence sensing devices
- Interlocking barrier guards

Remember, the factor that determines whether these or any other safeguarding methods eliminate the need for lockout tagout during routine, repetitive activities is whether the employee is protected from injury.

If lockout is not required, you MUST have clearly written procedure that describe the alternative safeguarding measures used and the tasks that may be performed. Refer to OSHA and ANSI standards for approved safeguarding methods.

6 Temporary Shutdown

- After stopping the pump empty and if necessary rinse it if



  - the medium might freeze due to the temperature surrounding the pump. Especially where there is a danger of frost if the pump is installed outside a building
  - the medium tends to solidify or harden
  - the medium tends to glue up the shaft seal.

- Stator:

  When stored for a long period, the elastomer along the contact line between the rotor and stator may become permanently distorted (compression-set).
  This will increase the break away torque. For this reason, the stator should be removed (please observe Section 9!), and stored in a cool, dry place in air tight package to give protection against light and air.

- Rotor:

  Remove **ceramic rotors** (please observe Section 10!) and store away, safe in the original packing.

  Support **other rotors** on wooden blocks and cover to protect them from mechanical damage, after the stator has been removed.

  Rotors made of RCC (material number 1.2436):
  Protect the rotor surfaces against corrosion with protective grease.



  Remove the grease before re–installing the stator and clean the rotor thoroughly in order to avoid unsuitability of the grease with the pumping medium or the stator material.

- Stand-by pump:

  A stand-by pump is sometimes used as a back-up for the main pump and, when standing idle for longer periods, should be operated from time to time. The pump may otherwise become seized when being started up. This is due to compression set i.e. distortion of the stator against the surface of the rotor.

7 Maintenance

7.1 Pumps in General

- The pumps should be regularly rinsed or cleaned if deposits of medium are likely to build up (sedimentation).





If the pump needs to be opened to do this, ensure that the pump and motor are switched off and cannot be turned on accidently (eg. by removing the fuse).

Periodical standstill to allow for cleaning during operation depends on the medium and type of operation.

- The pump can be cleaned:

  - through the cleaning ports provided in the pump housing
  - manually by dismantling the pump
  - automatically (CIP cleaning) for special housings with a flushing section (important instructions for CIP procedures are given in Section 5 (START UP).

7.2 Lubrication

The NEMO® pump does not require frequent lubrication.

- Maintenance of the drive should be carried out according to the drive manufacturers instructions.

- Maintenance
  - where no manufacturers instructions are available and
  - when normal conditions of use exist:

  - Strip down the drive unit
  - Remove the bearings
  - Clean all parts
  - Renew the lubricant

  every 5000 operating hours or at least every two years.



Special lubricants are often specified for mechanically controlled variable speed drives.
It is therefore important to follow the drive manufacturers maintenance instructions.

7.3 Lubricating the Pin Joints with SM-Pin Joint Seals

- It is advisable to change the oil and check the seals of the pin joints:
  - when renewing worn joint parts
  - when opening the pump for any reason.

  The quantity of oil added per pin joint is a function of the joint external diameter D:

Joint external diameter D in mm (see sketch)	Basic joint size	Quantity of oil per joint in cm^3
28	NM 015	1,5
30	NM 021	2
40	NM 031	5
54	NM 038	15
65	NM 045	22
76	NM 053	36
83	NM 063	78
102	NM 076	165
125	NM 090	205
148	NM 105	450
162	NM 125	470
Journal cross joint 175	NM125	1650

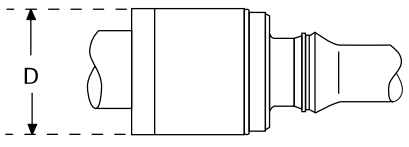

Pin joint

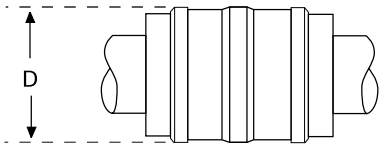

Journal cross joint

Continued Page 7.2R

Lubricating Oil:

Industrial application	Designation DIN 51502	Permitted Product
Food and Beverage Industry only	Authorized for use in foodstuffs — CLP HC 460	"KLÜBER" KLÜBEROIL 4 UH 1 - 460 authorized under USDA H1



This synthetic oil meets both the German "Arzneimittelbuch" requirements and the still stricter US American FDA regulations.
Nevertheless, it is not quite harmless if swallowed in more than minor quantities!

At a sudden break in a joint up to 450 ml of lubricating oil together with metal rubbings may enter the pumping medium. It is therefore of essential importance to regularly check the state of the joint seals and renew in time, if necessary.

If the pin joints operate without lubricating oil or seals, there will be no risk of contaminating the medium with oil. This operation, however, results in a higher amount of rubbed off metal parts through wear on the joints. These metal rubbings will inevitably and continuously come into contact with the pumping medium.

General Industry	CLP 460	"SHELL" Omala 460
	with SM-pin joint seal (8235) of EPDM CLP PG 320	prescribed: KLÜBERSYNTH GH 6-320

7.5 Shaft Sealing through Single Mechanical Seal

There are various constructions of mechanical seals. Especially advantageous is the use of standard mechanical seals according to DIN 24960. These seals have regardless of their brand the same fitting dimensions which makes them interchangeable. Mechanical seals with a coil spring can only be used for pumps which are run in one direction of rotation.

- The seal specification of a NEMO® pump is recorded on the order confirmation sheet.
- Pumps fitted with direction dependent seals should **never** be run in the opposite direction of the rotation arrow.
- If excessive leakages occur the spring tension and the seal surfaces should be checked, and the seal be replaced, if necessary.

Single mechanical seals usually work without any additional equipment. Their application range can be increased by operating them with a rinsing or cooling system.

a) **Quench**, in accordance with ISO 5199, Appendix E, Plan Nos. 08, 09, 10 or 13 or API 610, Appendix D, Plan No. 62.

Quench is the designation commonly used in sealing engineering for an arrangement that applies a non pressurized external fluid to the atmospheric side of a mechanical seal. The quench is used when

- a single mechanical seal will not work or only to a limited extent without auxiliary measures or
- a double mechanical seal with pressurized buffer fluid is not necessary.

Recommended for the following applications:

- Low temperature (danger of freezing)
- Operation in a vacuum (dry running)
- Media which must be isolated from the atmosphere (eg. due to build up of solid deposits or because of less severe damage to the environment, like smell).

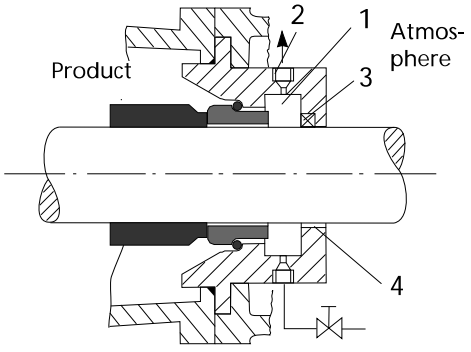

Continued Page 7.5R

Leakages will be transportet away by the quenching liquid.
In vacuum operation dry running of the seals is avoided.



No pressure higher than that of the pumped medium **in front** of the mechanical seal is allowed to build up in the quenching area (1) **behind** the mechanical seal. Otherwise the counter ring will be pushed out of the housing. **Free discharge** from (2) is necessary!

Closing off the quenching area from the atmosphere can be done in three ways:

1. In the case that high emission levels can be tolerated:
   Through a throttle bush (4). Cooling liquid not permanently used, only released from time to time.
2. In the case that medium emission levels can be tolerated:
   By a radial shaft seal ring (3). Permanent radial shaft seal lubrication through quenching liquid is necessary.

b) **Top lubrication**

Attention: For vertically installed pumps with overhead drive as type NT:

On initial start-up the mechanical seal has not come in contact with the medium. It runs therefore dry for a short period of time until the air is displaced from the pump housing.

- On first start–up and if stood idle for longer periods lubricate the mechanical seal before switching on the pump.
- Apply water, glycerine or oil depending on their compatibility with the pumping medium and the elastomer of the mechanical seal.
- Fill the quench cup of the mechanical seal housing.

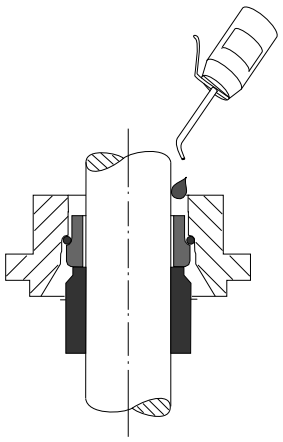

8 Trouble-Shooting and Remedying

8.1 Trouble Chart

The chart overleaf lists possible problems

- the type
- the likely reason / cause
- the remedy.

- A problem may have various causes: Several boxes in the vertical column are marked with a cross.
- A reason/cause may result in various problems:
  Several boxes in the horizontal column are marked with a cross.

8.2 How do you trace the kind of problem to find the possible cause ?

- The column describing a possible problem shows one or several boxes marked with a cross.
- On the corresponding lines you will find the possible reasons/cause and some hints how to handle the problem .
  Thus the actual cause of the problem can be narrowed down and eventually detected.
- If you find further cross-marked boxes on one of the lines and should there appear corresponding problems as well, then the likely cause of the problem has been detected.

- The table helps in finding the root of the problem and will give you the remedy if it is straight forward. For more complicated problems the manufacturer has to be consulted.

Continued Page 8.0R

The NEMO®-pump is a well established product which was thoroughly tested before leaving the factory. If you use the pump in keeping with your Order Specification and treat it in accordance with our Operating and Maintenance Instructions, it will run satisfactorily for a long period of time.

Possible Problems											
The pump is no longer starting	The pump is no longer sucking	The pumped medium is too little	The pressure is too low	The pumped medium is unstable	The pump is running loudly	The pump is stuck	The drive is overloaded	The stator life time is too short	The rotor life time is too short	The shaft seal is leaking	**Possible Causes** (Remedy overleaf)
X							X				In new pumps or stators : the static friction is too great.
X		X	X				X				The pump electrical equipment is not compatible with the electrical supply.
		X					X	X	X		The pressure is too high.
X						X	X				There are foreign bodies in the pump.
X						X	X	X	X		The temperature of the liquid medium is too high, the stator is too ductile.
X						X	X	X			The stator has swollen, the elastomer is not compatible with the medium.
X						X	X	X			The solids content of the medium is too high and leads to blockages.
X						X	X	X	X	X	The liquid medium sediments or hardens when left to stand.
		X	X	X							There is air in the suction pipe.
	X	X	X	X							The suction pipe is leaking.
	X	X	X	X							The shaft seal is leaking.
		X	X								The rpm is too low.
	X	X	X								With reduced diameter rotors : operating temperature has not been reached.
		X	X	X	X			X	X		The suction is too great or pressure too low (cavitation).
		X	X		X	X	X	X			The pump is running dry.
	X	X	X		X						The stator is worn out, or temperature of liquid is too low.
	X	X	X		X			X	X		The stator material is brittle.
	X	X	X		X			X			The rotor is worn out.
					X						The joints are worn out.
					X						The pump and drive are not axially aligned.
					X						The elastic element of the coupling is worn out.
					X					X	The roller bearings are destroyed.
							X				The rpm is too high.
							X				The viscosity is too high.
							X				The specific weight of the medium is too high.
							X			X	The stuffing box is incorrectly tightened.
										X	The packing is not suited to the liquid medium.
	X									X	Mechanical seal : rotation is incorrect.
										X	Mechanical seal : mechanical seal and mating ring have failed.
										X	Mechanical seal : elastomers damaged, swollen or brittle.

Remedy
Fill the pump up, then pump through manually using a suitable appliance; if necessary use glycerine as lubricant in the stator.
Check order information. Examine electrical installation (possibly 2 phase operation).
Measure the pressure with a manometer and check against order details. Reduce the pressure or change the drive.
Remove foreign bodies and eliminate possible damage.
If the liquid medium temperature cannot be lowered, use a reduced diameter rotor.
Check whether the liquid medium agrees with the order requirements. Possibly change stator material..
Increase the liquid part of the medium.
Clean the pump and rinse through after each run.
Increase the suction liquid level, prevent turbulance and air bubbles at the inlet.
Check seals and tighten pipe connections.
Stuffing box : tighten or renew. Mechanical seal : renew seals, eliminate solid deposits.
In the case of adjustable drives : increase the rpm. If necessary change the drive.
Warm up the pump (stator) to operating temperature first of all.
Decrease suction resistance, lower the temperature of the liquid medium, install the pump at a lower location.
Fill up the pump, provide for dry running protection, move the pipes.
Replace with a new stator or ensure correct liquid temperature.
Fit a new stator. Check the liquid medium agrees with order details; if necessary change the stator material.
Change rotor, establish the cause. Wear and tear, corrosion, cavitation; if necessary change to a different material or coating.
Replace relevant parts, carefully reseal and lubricate.
Re-align the unit.
Use a new connection and re-align the pump.
Replace roller bearings, lubricate, reseal. At higher temperatures observe the lubricant and the bearings.
In the case of adjustable drives : lower the rpm.
Measure the viscosity and compare with order details. If necessary adjust viscosity or change the drive.
Measure specific weight and compare with order details. If necessary adjust specific weight or change the drive.
Service stuffing box according to page 7.4, if necessary renew worn shaft.
Replace fitted packing with another packing type.
Change electrical connection.
Replace relevant rings with new ones.
Replace elastomers. Check whether the liquid medium agrees with order details, if necessary change material.

9 Removal and Fitting of End Stud, Stator and Pump Housing



The pump with attached pipework should be empty and must have cooled off!
Disconnect the pipework on the suction side and pressure side of the pump.

Caution for pumps with ceramic rotors!



Where a pump is fitted with a **ceramic** rotor (1999) the following operations should be carried out **with great care.**
Do not use any force or sharp tools! Special care must be taken to prevent heavy strokes, vibrations or impact by a hammer.

Dismantling

- Remove the securing screws (S) from support feet (2035) to baseplate (G).

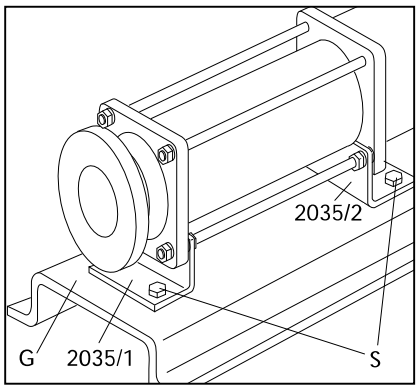

- Unscrew the hex nuts A (3020) and remove with spring washers (3015), then withdraw the end stud (2005) and first support foot (2035/1) with washers (3070).

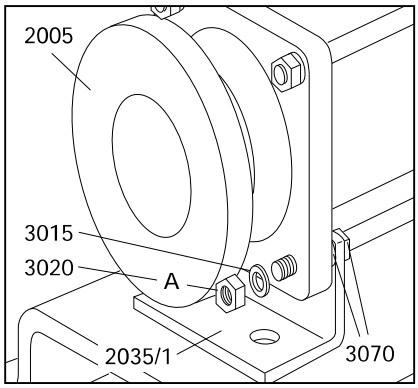

Continued Page 9.0R

9 DISMANTLING AND ASSEMBLY OF THE PUMP HOUSING

- Support pump housing (2010) and stator (3005) with wooden blocks.
- Loosen the hex nuts B (3020), where fitted, and remove the thru bolts (3010).

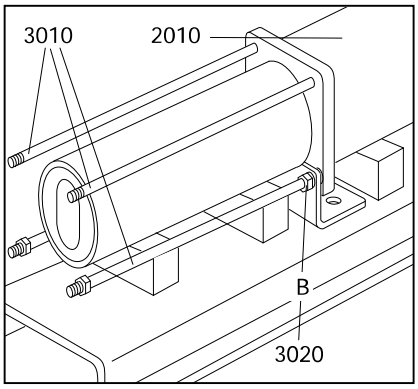

- Where fitted, remove the second support foot (2035/2) and the washers (3070).

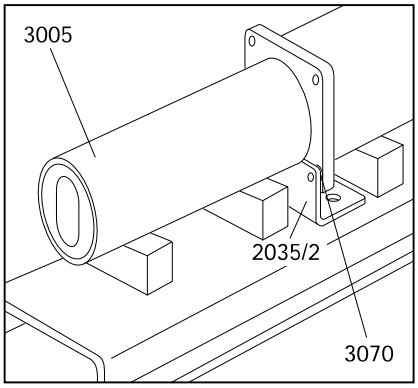

Caution for pumps with ceramic rotors!

When the stator (3005) is removed from the **ceramic** rotor (1999), the stator must be supported to prevent it from suddenly tilting away downwards. The same applies to the rotor (1999) as soon as it is disengaged from the stator (3005). Removing the stator (3005) from the **ceramic** rotor (1999) is easier by using an extractor. This should be done slowly and with care in a rotating movement. When sliding pump housing (2010) over **ceramic** rotor (1999), both coupling rod (1998) and rotor (1999) should be lifted as the **ceramic** rotor (1999) must not knock onto the pump housing (2010).

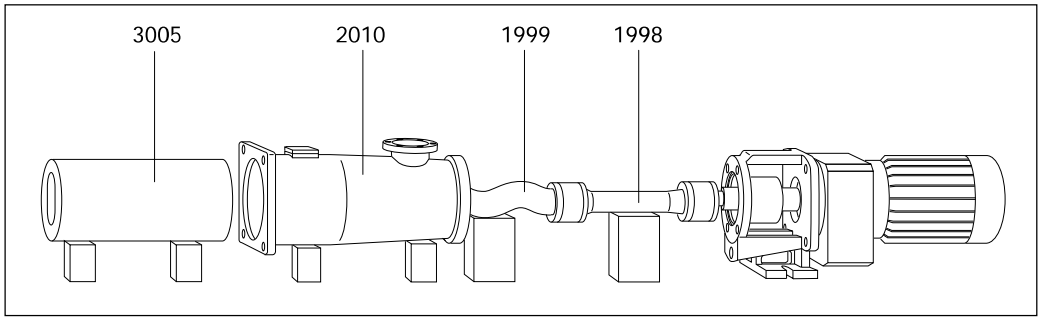

Continued Page 9.1

Caution for pumps with tubular rotors:

Where the walls of tubular rotors are worn in the wear zones, pumping medium may occur inside the rotor and may come out when pulling off the stator.
Ensure that protective measures have been taken when pumping dangerous media!

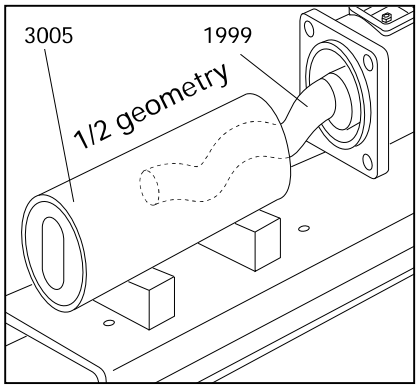

- Pull the stator (3005) out forward.
  A stator extractor can be supplied as special accessory.

- Remove the hex nuts (2030) with spring washers (2025).
- Pull the pump housing (2010) off forward.

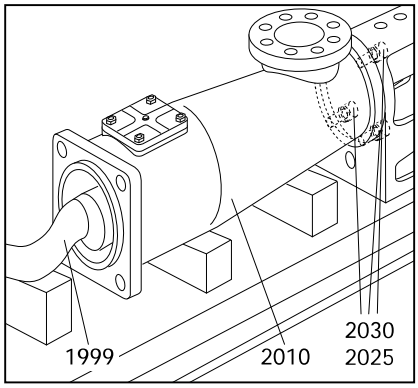

Assembly

- Refitting is a simple reversal of this procedure.

  When refitting the stator (3005) check direction of stator (3005) is correct! The funnel-shaped inflow side (E) of the stator (3005) must show to
  - the pump housing (2010) when rotation is **anti-clockwise**
  - the end stud (2005) when rotation is **clockwise**

  when viewed on pump shaft end.

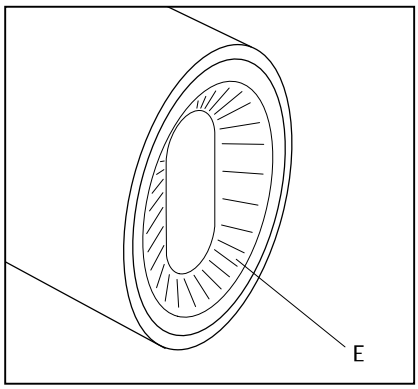

- **Elastomer stators (A)** have integrated front side sealing profiles (D). They don't need additional gaskets for sealing off the end stud (2005) and the pump housing (2010).

- **Solid stators (B)** have **no** integrated front side sealing profiles. Therefore additional gaskets (8005) should be installed to seal off the end stud (2005) as well as the pump housing (2010).

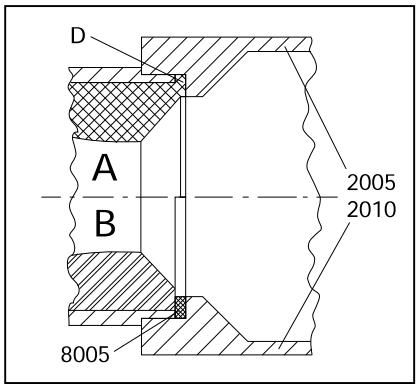

Continued Page 9.1R

9 DISMANTLING AND ASSEMBLY OF THE PUMP HOUSING



Be careful when engaging the stator (3005) and rotor (1999). Do not trap your fingers!
Do not reach inside the stator!

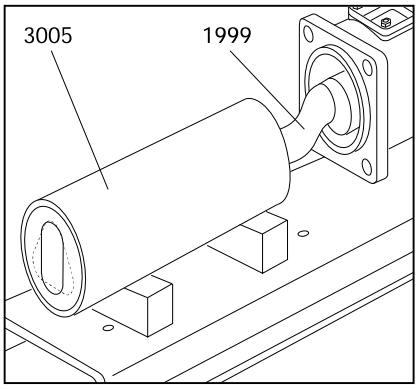

- Push the stator (3005) with a rotating movement on to rotor (1999).
  Apply an assembly device and some glycerine to ease engaging the stator (3005) and rotor (1999).

- When tightening hex nuts (2030) a gap will remain between drive stool (0085) and pump housing (2010).



Please do not try to close this gap by overtightening the nuts!
Drive stool (0085) may break!

Torque values for hex nuts (2030):

Size	M6	M8	M10	M12	M16	M20	M24	M30
Required torque Nm	8	15	30	45	75	80	100	120

- Fastening the end stud (2005):

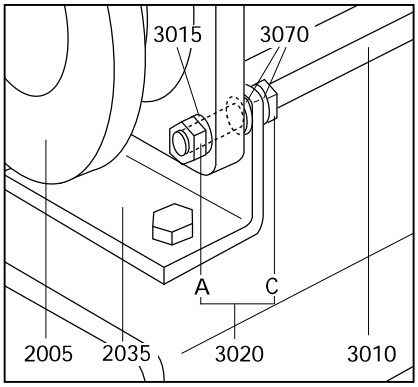

Screw the hex nuts C (3020) down into the thru bolts (3010) as far as possible.
Slip on the first washers (3070), the support foot (2035), the second washers (3070), the end stud (2005) and tighten with spring washers (3015) and hex nuts A (3020).
Finally, fasten the support foot (2035) from behind with the two hex nuts C (3020).

Ensure during refitting that the O-ring (8015) or, where a heating jacket (3025) is installed, the O-rings (8030) are in perfect condition and will sit correctly.



Ensure that the drain plug (2015) is not screwed too tightly into the pump housing (2010), since otherwise its conical thread may break the pump housing (2010).
The torque should be about 40 - 50 Nm.

10 Dismantling and Assembly of the Rotating Parts with Pin Joints with SM-Pin Joint Seal (basic joint size NM015 - NM125)

10.1 Removal of Rotor and Coupling Rod

Where a pump is fitted with a **ceramic** rotor (1999) the following operations should be carried out **with great care.** Do not use any force or sharp tools! Special care must be taken to prevent heavy strokes, vibrations or impact by a hammer.
For removal of the rotor (1999) and coupling rod (1998) the pin joints should be dismantled as follows:

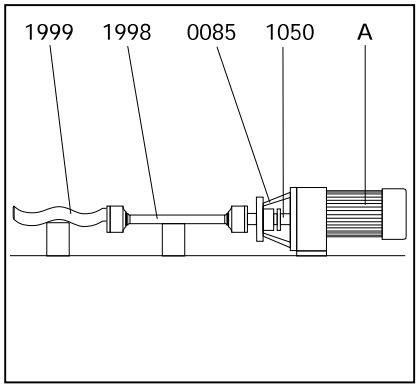

- Place the dismantled unit – consisting of drive stool (0085) with drive (A) and connecting shaft (1050), coupling rod (1998) and rotor (1999) – on the work-bench with a wooden block supporting the rotor (1999).

Basic joint size NM125:

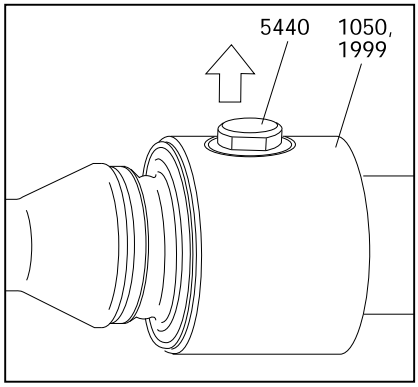

- Unscrew the wear sleeves (5440) from the head of rotor (1999) or connecting shaft (1050)

Basic joint size NM021 - NM105:

- Push circlip (5065) out of its groove and slip off over the head of rotor (1999 or connecting shaft (1050).

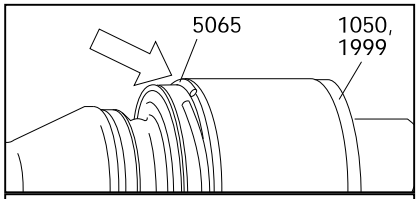

Pumps fitted with a ceramic rotor (1999):

- **Carefully** turn safety sleeve (5115) with a squeeze belt wrench, and remove.

The following method should **not** be employed for pumps fitted with a **ceramic** rotor.

Pumps fitted with a metallic rotor (1999):

- If necessary hit the edge of sleeve (5115) at an angle with the help of a wooden block and a plastic hammer. Taking care not to damage the O-rings (8060)!

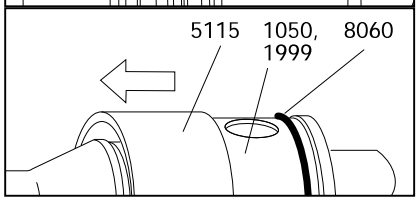

Continued Page 10.0R

10 DISMANTLING AND ASSEMBLY OF THE ROTATING PARTS

Basic joint size NM021 - NM125:

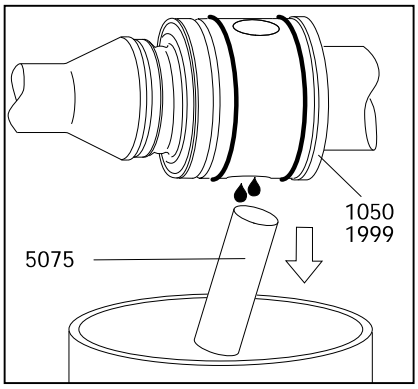

- Press the pin (5075) out of the head of rotor (1999) or connecting shaft (1050). If necessary use a hammer and a thin cylindrical pin (DIN 6450 C).
  Drain the oil into a receptacle.

  Caution for pumps with ceramic rotors!

  Where a pin (5075) may not come out easily, the metallic head of rotor (1999) should be supported on wooden blocks. Then the pin (5075) can be driven out with the help of a pin punch (DIN 6450 C). This should be done **with care**, holding the **ceramic** rotor with your hands.
  Please dispose of this oil in the proper manner.

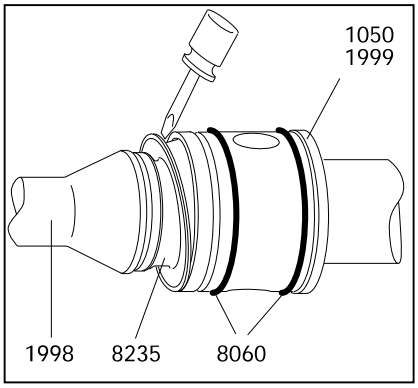

- Using a screwdriver, carefully lever the SM-pin joint seal (8235) out of the head of rotor (1999) or connecting shaft (1050).



Taking care not to damage the SM-pin joint seal (8235)!

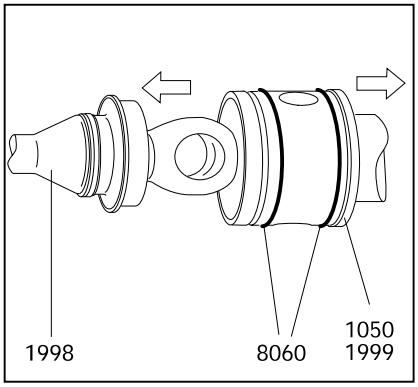

- Pull apart the rotor (1999)/ coupling rod (1998) / connecting shaft (1050) assembly. Remove the O-rings (8060).

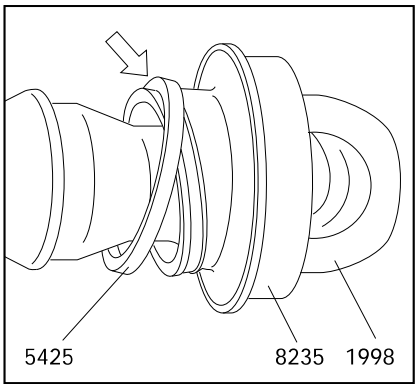

- Push the SM-pin joint seal (8235) towards the head of coupling rod (1998). In the narrow coupling rod section press the clamp ring (5425) out of the groove of the seal. Then slip the SM-pin joint seal (8235) and clamp ring (5425) off over the head of the coupling rod (1998).

Continued Page 10.1

10.2 Fitting the Rotor and Coupling Rod

For fitting the rotor (1999) with coupling rod (1998), the two pin joints should be assembled as follows:

- Slip the clamp ring (5425) over the head of coupling rod (1998).

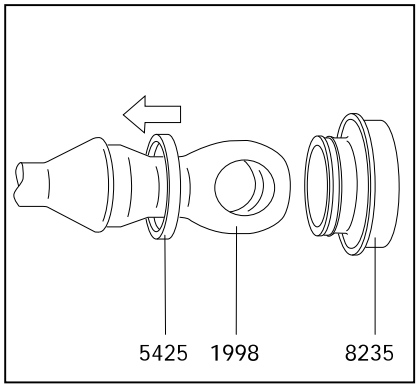

- Push the SM-pin joint seal (8235) over the head of coupling rod (1998) towards its narrow section, there sqeezing the clamp ring (5425) into the groove of the SM-pin joint seal (8235).

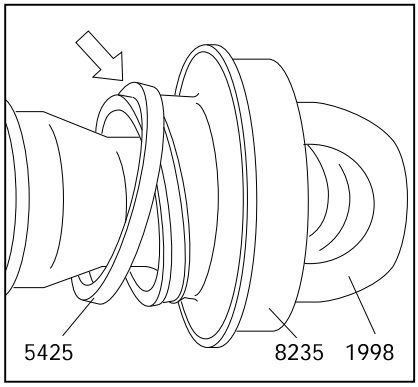

- Push the SM-pin joint seal (8235) with the correctly placed clamp ring (5425) up to the shoulder of coupling rod (1998).

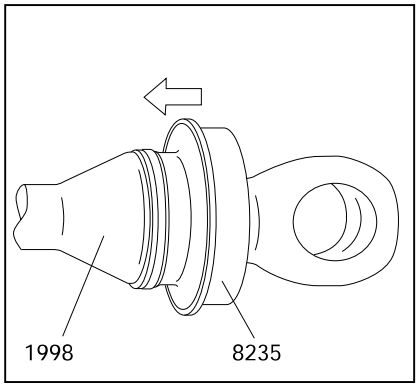

Continued Page 10.1R

10 DISMANTLING AND ASSEMBLY OF THE ROTATING PARTS

Basic joint size NM021 - NM105:

- Slip the circlip (5065) on to the coupling rod (1998). Slide the sleeve (5115) on to coupling rod (1998) so the inside diameter of chamfering (A) is being placed towards the coupling rod (1998) extension. Chamfering (A) will later on ease the installation over the O-rings (8060).
  Orient the head of coupling rod (1998) until it is in vertical position for the bore (B) for the pin (5075).

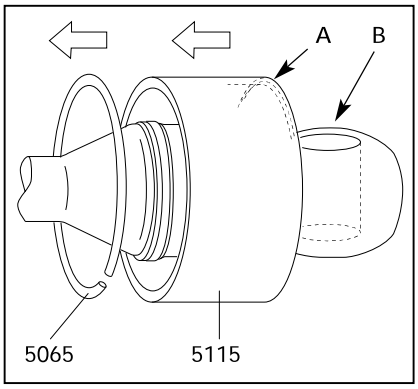

- Slide the coupling rod (1998) with SM-pin joint seal (8235) into the bore of rotor (1999) or connecting shaft (1050) and insert the pin (5075) from below and push up to the upper edge of coupling rod (1998).
  Support the pin (5075) against dropping out.
  Slide the SM-pin joint seal (8235) into the rotor (1999) or connecting shaft (1050) only from below, and in a slightly slanted position.

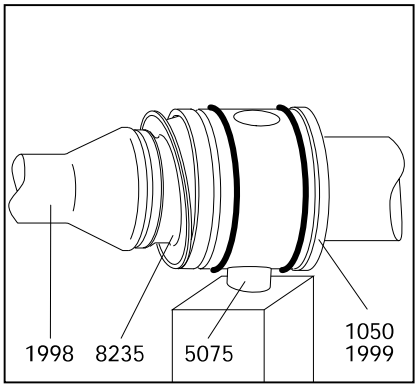

- For lubrication, use an oil can which should be fitted with a thin plastic hose having an outside diameter of not more than 4 mm.
  Insert this hose into the upper oil port opening in the rotor (1999) or connecting shaft (1050). Then slide the hose end past the coupling rod (1998) all the way down to the bottom section of the rotor head (1999) or connecting shaft (1050).
  Slowly fill with lubricating oil up to the filling port.

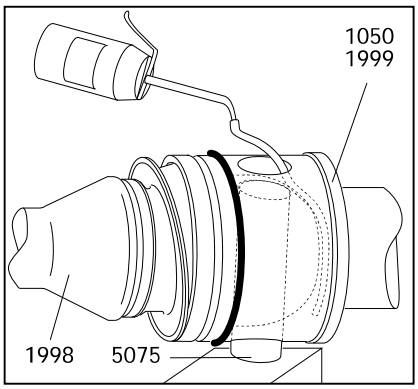

- Pull the hose out.
  Then insert the hose end through the small gap on the topside of SM-pin joint seal (8235) and guide it down to the bottom of the hollow space between coupling rod (1998) and SM-pin joint seal (8235).
  Slowly fill with lubricating oil up to the gap.

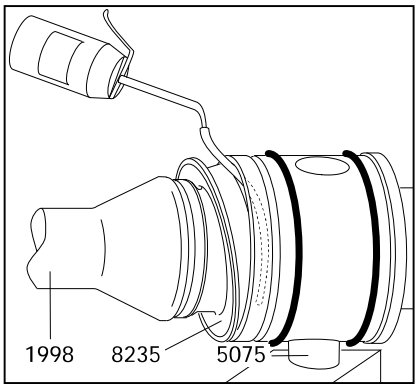

Continued Page 10.2

- Pull the hose out.
  Push the pin (5075) entirely into the bore of head of rotor (1999) or connecting shaft (1050) and retain in place.
  Only now, press the SM-pin joint seal (8235) into the bore of head of rotor (1999) or connecting shaft (1050) and push up to the shoulder. In doing so the SM-pin joint seal (8235) should be slightly bulbous around the outer surface. Wipe off overflow oil. Use this oil for lubricating the O-rings (8060).

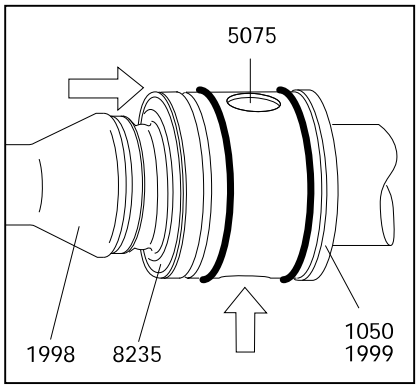

- Slip the sleeve (5110) or (5115), with its chamfering (A) forward, on to the head of rotor (1999) or connecting shaft (1050) and push up to the shoulder.

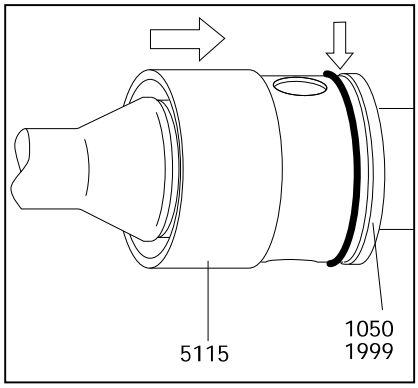

- Place the circlip (5065) into its groove on the rotor head (1999) or connecting shaft (1050) and carefully snap in place all around.

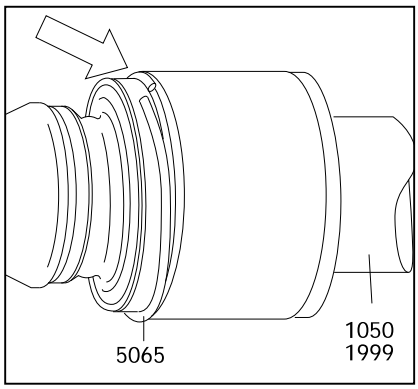

- **Basic joint size NM125:**

  Slide the coupling rod (1998) into the bore of the head of rotor (1999) and connecting shaft (1050) and insert the pins (5075).
  Insert the SM-pin joint seal (8235) (8235) into the head of rotor (1999) and connecting shaft (1050).
  Only then screw in one wear sleeve (5440) with O-ring (8060) into the head of rotor (1999) and connecting shaft (1050) and turn upside down.

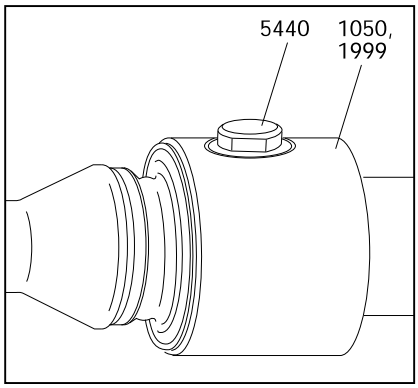

10 DISMANTLING AND ASSEMBLY OF THE ROTATING PARTS

- For lubrication, use an oil can which should be fitted with a thin plastic hose having an outside diameter of not more than 4 mm.
  Insert this hose into the upper oil port opening in the rotor (1999) or connecting shaft (1050). Then slide the hose end past the coupling rod (1998) all the way down to the bottom section of the rotor head (1999) or connecting shaft (1050).
  Slowly fill with lubricating oil up to the filling port.

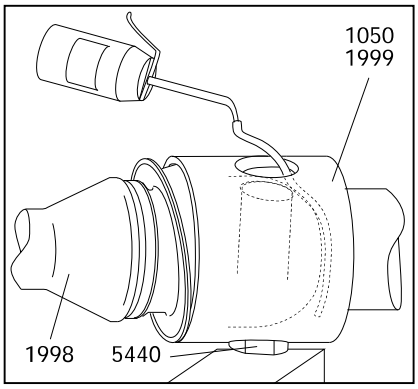

- Pull the hose out.
  Then insert the hose end through the small gap on the topside of SM-pin joint seal (8235) and guide it down to the bottom of the hollow space between coupling rod (1998) and SM-pin joint seal (8235).
  Slowly fill with lubricating oil up to the gap.
- Screw in the second wear sleeve (5440) with O-ring (8060) into the head of rotor (1999) and connecting shaft (1050).

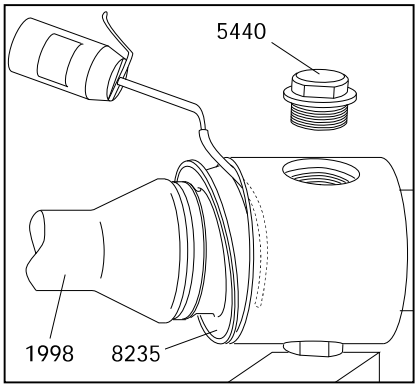

- **Basic joint size NM021 - NM125:**

  Drive connecting shaft (1050), coupling rod (1998) and rotor (1999) are now joined by means of the two pin joints.
  Pump housing (2010), stator (3005) and end stud (2005) may now be fitted.

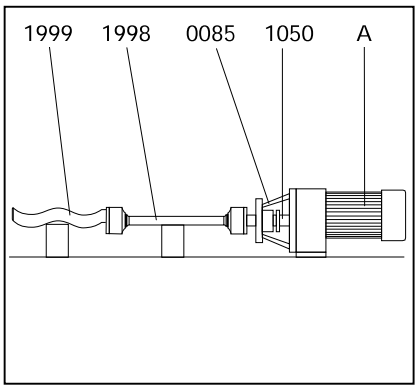

Continued Page 10.3

10.3 Dismantling and Assembly of the Rotating Parts with Pin Joints with SM-Pin Joint Seal (joint basic size NM015)

For removal and refitting of the rotor (1999) and coupling rod (1998) the pin joints should be dismantled and re-assembled as follows:

Dismantling:

- Push the SM-pin joint seal (8235) away from the rotor (1999), drive shaft (1005) or connecting shaft (1050) so the bore for the pin (5075) comes free.

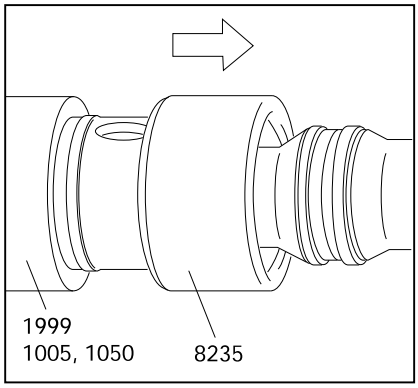

- Press the pin (5075) out of the rotor (1999), connecting shaft (1050) or drive shaft (1005). Then withdraw the coupling rod (1998) from the bore of rotor (1999), connecting shaft (1050) or drive shaft (1005).

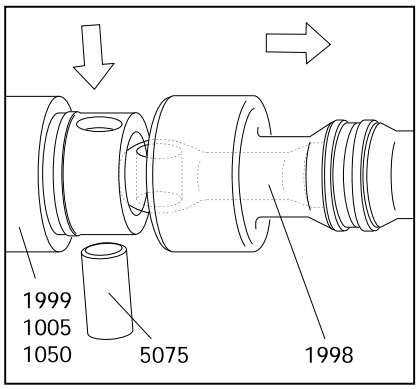

- Push the SM-pin joint seal (8235) towards the head of coupling rod (1998). In the narrow coupling rod section press the clamp ring (5425) out of the groove of the seal. Then slip the SM-pin joint seal (8235) and clamp ring (5425) off over the head of the coupling rod (1998).

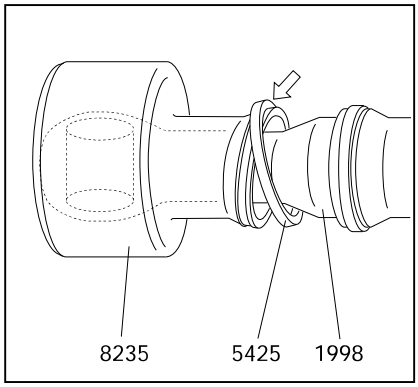

Continued Page 10.0R

10 DISMANTLING AND ASSEMBLY OF THE ROTATING PARTS

Re-Assembly:

- Slip the clamp ring (5425) and the SM-pin joint seal (8235) on over the head of the coupling rod (1998).

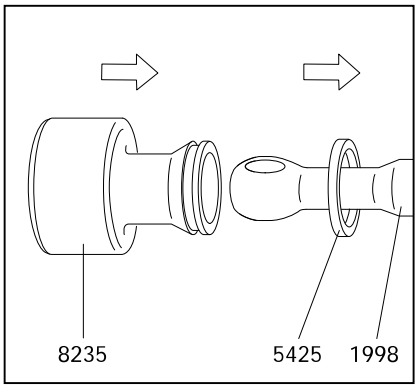

- Push the SM-pin joint seal (8235) towards the narrow section on the head of coupling rod (1998) and place the clamp ring (5425) back into the groove of the SM-pin joint seal (8235).
  Then move the SM-pin joint seal (8235) up to the coupling rod (1998) shoulder.

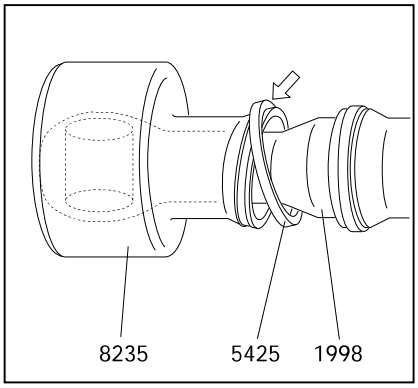

- Place the head of coupling rod (1998) into the bore of the rotor (1999), drive shaft (1005) or connecting shaft (1050).

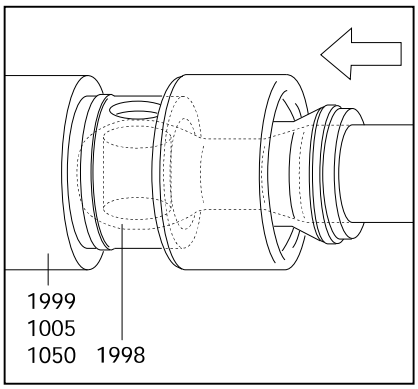

- Join the rotor (1999), drive shaft (1005) or connecting shaft (1050) and coupling rod (1998) by the pin (5075).
  Then push the SM-pin joint seal (8235) up to the shoulder of the rotor (1999), drive shaft (1005) or connecting shaft (1050).

  Re-assemble the second pin joint in the same manner.

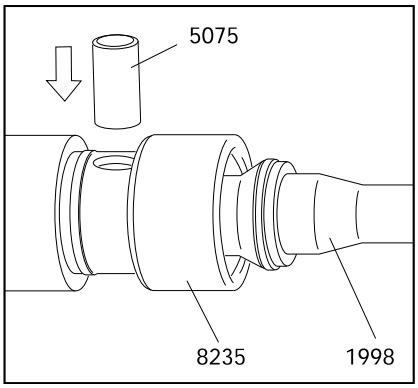

11 Removal and Fitting of the Connecting Shaft with Shaft Seal

Removal:

- Push the circlip (1035) in the direction to the mechanical seal.
- Remove pin (1030).
- Remove the shaft seal housing (7005) and mechanical seal (7010) together with connecting shaft (1050) and set ring (1035) from drive stool (0085) and the drive shaft.
  The thread of cylindrical head screw (1040) can be used as forcing screw.
- If a mechanical seal is installed, see description "Removal and Fitting of Mechanical Seal" after Page 12.0.

Fitting:

- Apply grease into the bore of the connecting shaft (1050) to avoid rust (e.g. TCE-Metallic 600).
- Assemble the shaft seal housing (7005) and mechanical seal (7010) together with connecting shaft (1050) and set ring (1035) with drive stool (0085) and push connecting shaft (1050) on to the drive shaft.
  At this please observe the installation direction of set ring (1035) (please see mark).
- If a mechanical seal is installed, see description "Removal and Fitting of Mechanical Seal" after Page 12.0.
- Connect the connecting shaft (1050) and the drive shaft by pin (1030).
  Push set ring (1035) on pin (1030).

12.1 Removal and Fitting of the Single Mechanical Seal

- **Carefully** slide out mechanical seal housing (7005) together with the parts of the mechanical seal contained in it from connecting shaft (1050).
- **Carefully** push mechanical seal (7010) stationary seat out of mechanical seal housing (7005).

Refitting is a simple reversal of the above procedure.

- To reduce frictional forces during seal assembly, apply some glycerine to the shaft and the seal housing in the area of the gaskets.
- Special care must be taken when fitting double PTFE-coated gaskets: the **joint** of the outer coating must point away from the seal assembly direction, otherwise the coating may open or be pulled off!



Ensure that the distribution of pressure is uniform when inserting the pressure sensitive counter rings. When inserting larger rings, use a suitable mandrel.
Do not allow any foreign bodies to get between the sliding surfaces.

- Exactly keep to the seal installation dimensions and ensure that the sealing faces are correctly pressed together (see table on sectional drawing W 209.000 or W 210.000).
- Insert mechanical seal (7010) stationary seat into mechanical seal housing (7005).
- Insert mechanical seal housing (7005) together with the stationary seat into the drive stool **without the installed connecting shaft (1050).**
- If necessary take the installation dimension from the table and add the thickness S of the set ring (7086) when existing.
- Mark this installation dimension on the connecting shaft (1050).
- Fix the rotating unit of the mechanical seal (7010) on the connceting shaft (1050) depending on the installation dimension so that the rotating unit of the mechanical seal (7010) or the set ring (7086) is at the mark.
- Insert connecting shaft (1050) with the rotating unit of the mechanical seal (7010) into drive stool (0085) and install lip seal (7091, if existing. Push the set ring (1035) on to connecting shaft (1050) and observe at this the installation direction (see mark).
Push connecting shaft (1050) on to the drive shaft and connect with pin (1030). Push the set ring (1035) on pin (1030).

Inspection Opening at the Pump Housing

gray cast iron model on from size NM045

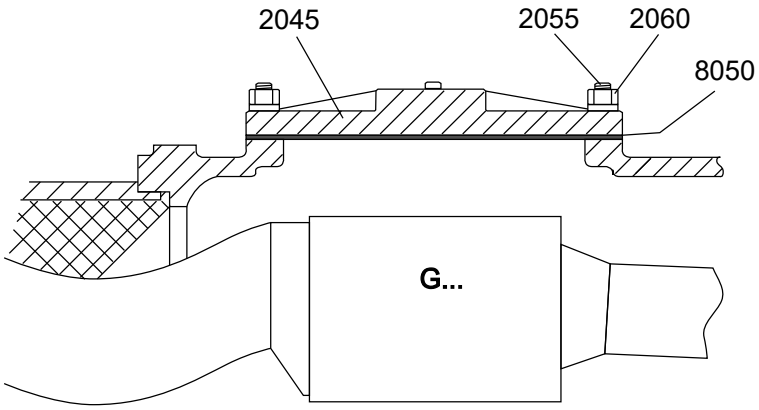

design for welded housings – nominal size DN 76,1 – ISO 2852

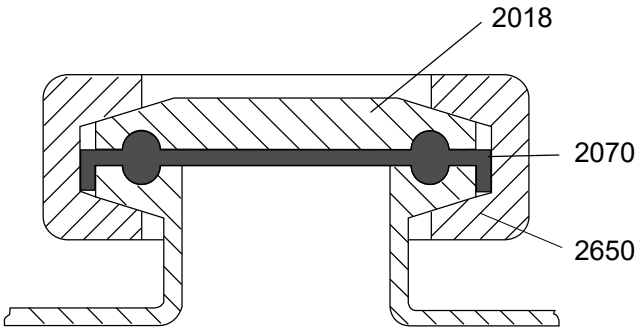

14 Recommended Spare Parts

In general, we have all spare parts in stock. Our subsidiaries and exclusive representatives also hold a certain stock. For special cases and when short waiting periods are not acceptable, we recommend to keep an amount of spare parts, corresponding to the pump, in stock on site (please see table below).

- **Rotor**
- **Stator**
- **Elastomer parts as O-rings and sleeves**
- **joint parts**
- **shaft seals.**

To avoid mistakes in delivery, please identify the parts by their position number shown in the spare parts list or on the sectional drawing.

For placing a spare parts order, it is absolutely necessary to give the following details:

Pieces (see column 2) - Designation (see column 3) - Identification Number (see column 4)

The column details are taken from the spare parts list. See example.

Example:

SPARE PARTS LIST		10.05.94		10:50:18	Page: 1 / 5
1		2		3	4
PART EURO	POS.	Quantity	Unit	Designation Size – Norm – Material/Surface	Ident-Number
3410	0005	1,000	pc	bearing housing	850221
2910	0010	1,000	pc	distance sleeve	850220
3520	0015	1,000	pc	bearing cover	850222

15 Sectional Drawings and List of Spare Parts

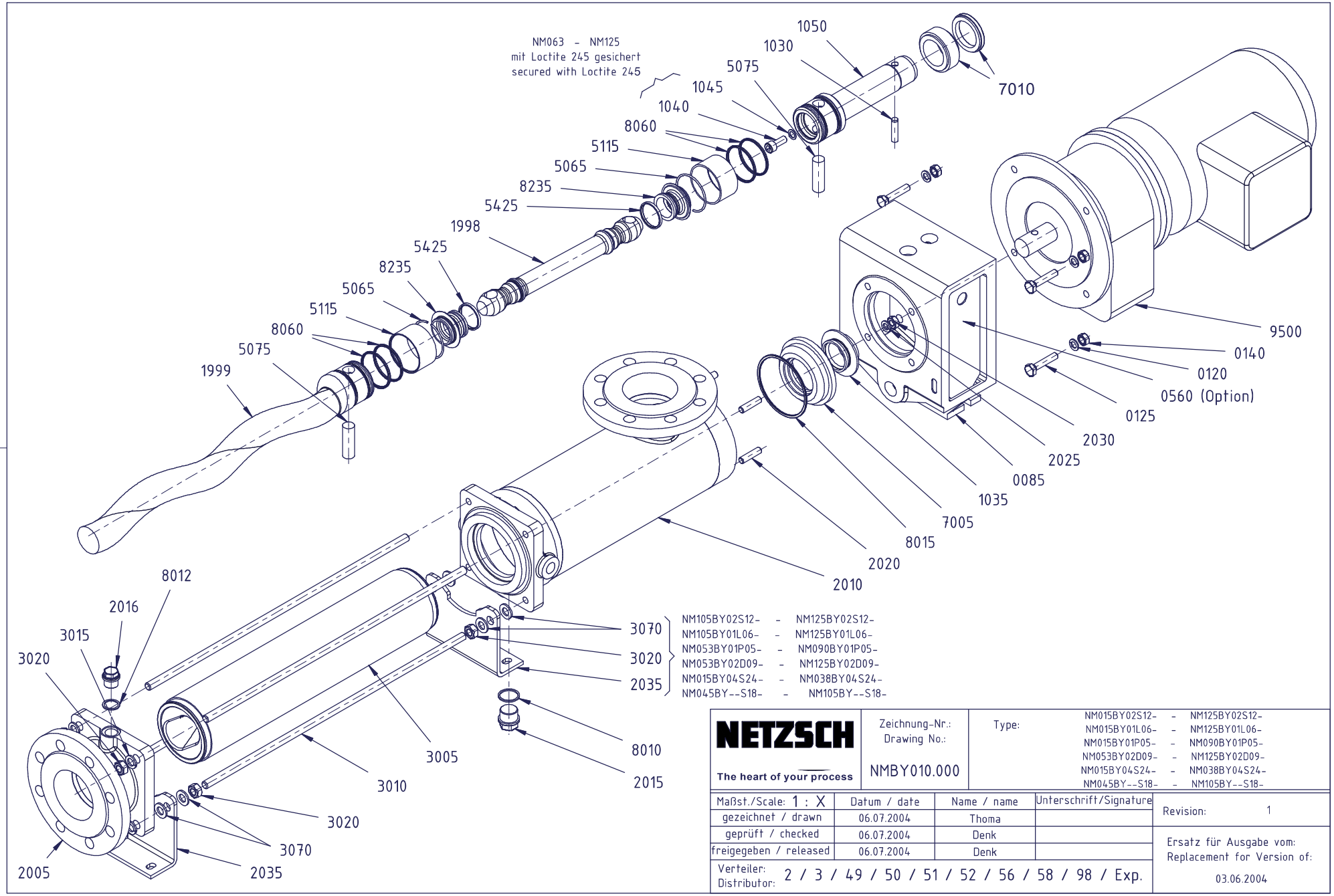

NETZSCH

The heart of your process

Zeichnung-Nr.: Drawing No.:	NMBY010.000
Type:	NM015BY02S12- - NM125BY02S12- NM015BY01L06- - NM125BY01L06- NM015BY01P05- - NM090BY01P05- NM053BY02D09- - NM125BY02D09- NM015BY04S24- - NM038BY04S24- NM045BY--S18- - NM105BY--S18-

Maßst./Scale: 1 : X	Datum / date	Name / name	Unterschrift/Signature
gezeichnet / drawn	06.07.2004	Thoma	
geprüft / checked	06.07.2004	Denk	
freigegeben / released	06.07.2004	Denk	

Verteiler: Distributor: 2 / 3 / 49 / 50 / 51 / 52 / 56 / 58 / 98 / Exp.

Revision: 1

Ersatz für Ausgabe vom: Replacement for Version of: 03.06.2004

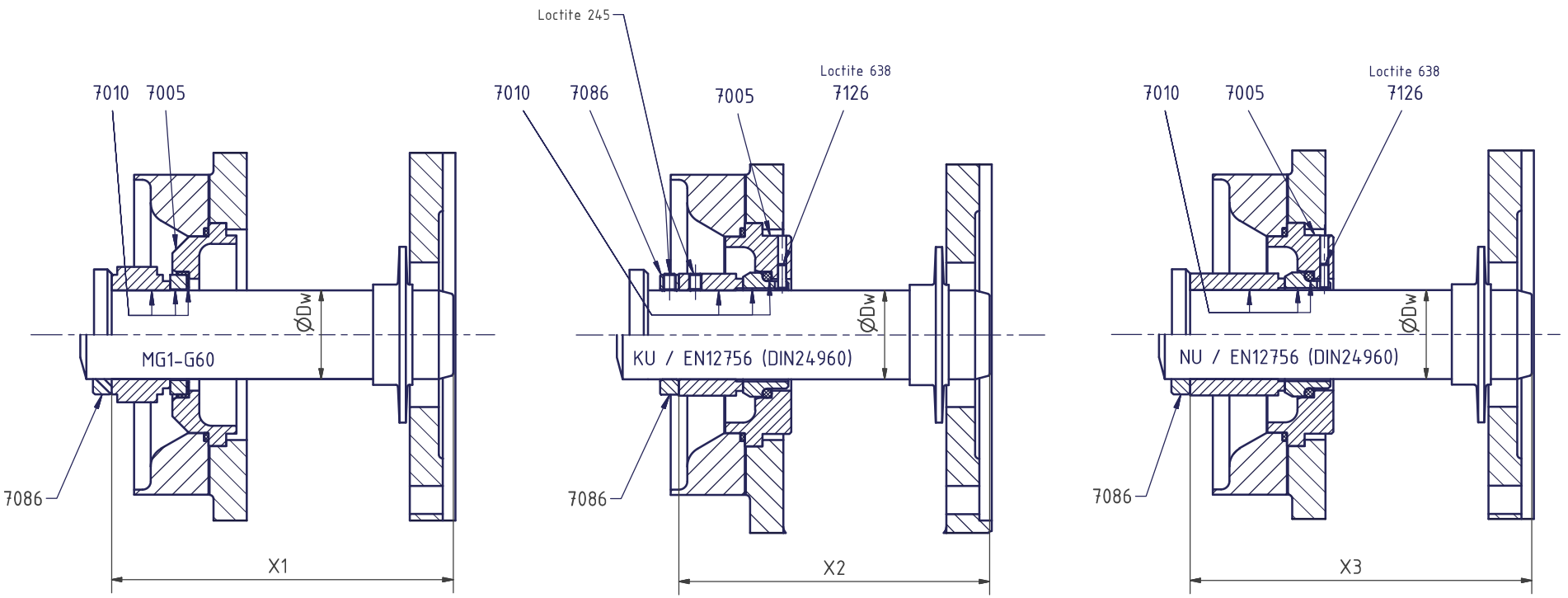

Dw 35 - Dw 100

Dw	MG1-G60	KU / EN12756 (DIN24960)	NU / EN12756 (DIN24960)
	X1	X2	X3
25	116,5	116,5	–
35	152,1	139,6	152,1
40	147,5	137,5	147,5
43	165,5	150,5	165,5
55	181	158,5	181
65	201,5	174	201,5
70	207	187	207
85	219	189	219
100	249	224	249

NETZSCH

Zeichnung-Nr.: Drawing No.: W209.000

Einf. wirk. GLRD
Single Mechanical Seal

Type: NM015B/S- (P) - NM105B/S- (P)

Maßst./Scale: 1 : X	Datum / date	Name / name	Unterschrift/Signature
gezeichnet / drawn	29.07.2011	Thoma	
geprüft / checked	29.07.2011	Denk	
freigegeben / released	29.07.2011	Denk	

Verteiler: Distributor: 2 / 3 / 49 / 50 / 51 / 52 / 58 / 94 / 95 / 97 / 98 / exp

Revision: 5

Ersatz für Ausgabe vom: Replacement for Version of: 20.08.2009

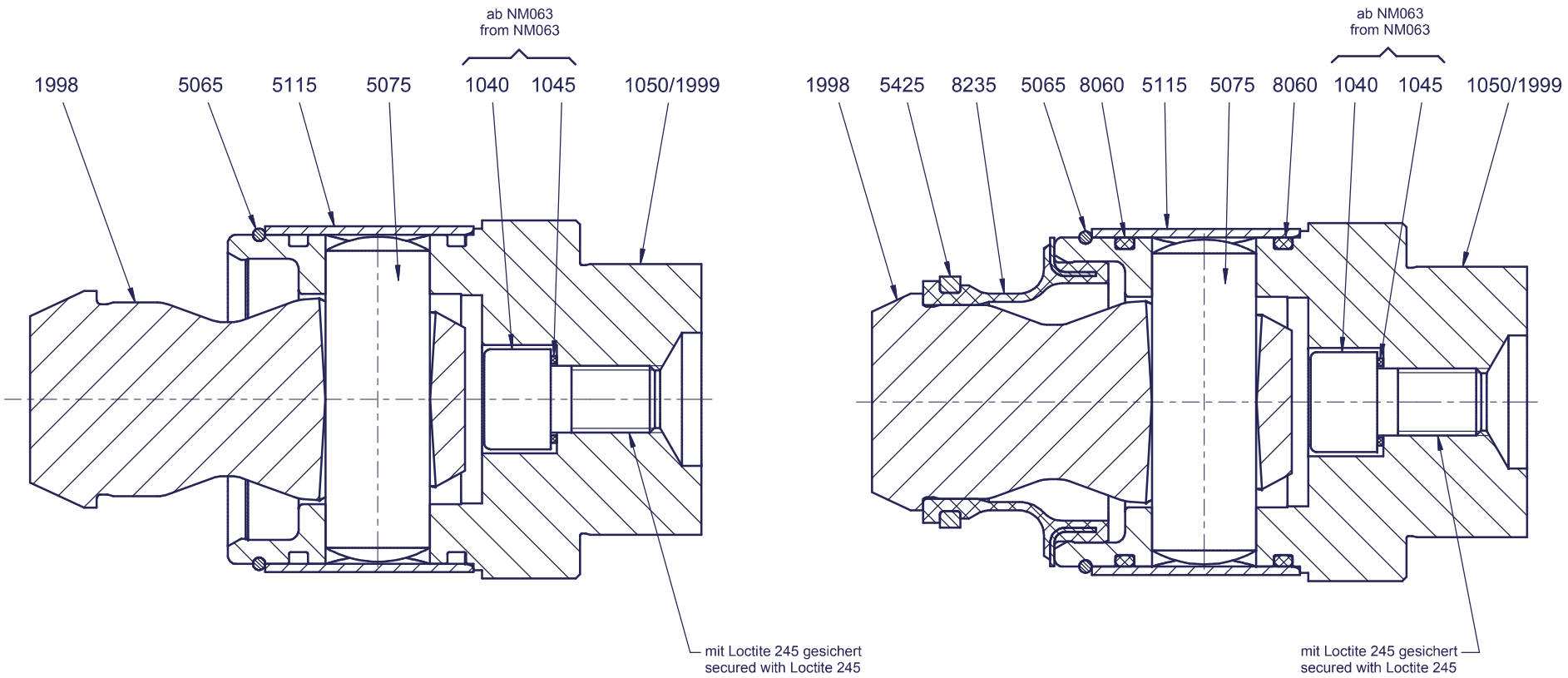

nur/only NM015B- (P)

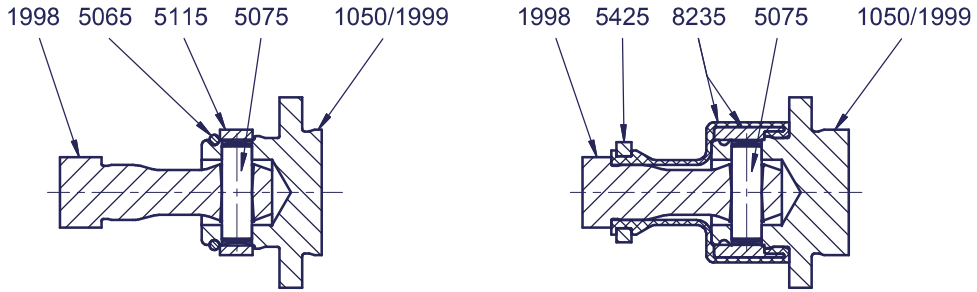

NETZSCH The heart of your process	Zeichnung-Nr.: Drawing No.: G146.000	Bolzengelenk ohne/mit SM-Bolzenabdichtung Pin Joint without/with SM-Pin Joint Seal			Type: NM015B- (P) - NM105B- (P)
Maßst./Scale: 1 : X	Datum / date	Name / name	Unterschrift/Signature	Revision:	1
gezeichnet / drawn	14.10.2003	Preintner			
geprüft / checked	14.10.2003	Thoma		Ersatz für Ausgabe vom: Replacement for Version of:	
freigegeben / released	14.10.2003	Thoma			
Verteiler: Distributor:	2 / 3 / 50 / 51 / 52 / 58 / 98			23.05.2003	

Inquiry/Order Form

NETZSCH

►Please copy before use

☐ Inquiry ☐ Order

NETZSCH Canada, Inc.
500 Welham Road
Barrie, ON, L4N 8Z7

Tel: 1-705-797-8426
Fax:1-705-797-8427
ntc@netzsch.com
www.pumps.netzsch.com

Company Address

Person in Charge

Tel:

Fax:

Delivery address

Billing address

Important: Please fill in		
Machine #	Pump Com #	Type
Quantity	Pos. No.	Description

Required delivery date_____

Address_____

Date_____ Signature/co. stamp_____

DATA SHEET

Three Phase Induction Motor - Squirrel Cage

Customer	:

Product line	: NEMA Premium Efficiency Three-Phase	Product code :	14337968

Frame	: 143/5TC	Cooling method	: IC411 - TEFC
Insulation class	: F	Mounting	: F-1
Duty cycle	: Cont.(S1)	Rotation¹	: Both (CW and CCW)
Ambient temperature	: -20°C to +40°C	Starting method	: Direct On Line
Altitude	: 1000 m.a.s.l.	Approx. weight³	: 31.5 kg
Protection degree	: IP55	Moment of inertia (J)	: 0.0041 kgm²
Design	: B		

Output [HP]		1
Poles		4
Frequency [Hz]		60
Rated voltage [V]		575
Rated current [A]		1.14
L. R. Amperes [A]		9.84
LRC [A]		8.6x(Code M)
No load current [A]		0.748
Rated speed [RPM]		1760
Slip [%]		2.22
Rated torque [kgfm]		0.414
Locked rotor torque [%]		290
Breakdown torque [%]		370
Service factor		1.15
Temperature rise		80 K
Locked rotor time		32s (cold) 18s (hot)
Noise level²		51.0 dB(A)
Efficiency (%)	25%	
	50%	80.0
	75%	82.5
	100%	85.5
Power Factor	25%	
	50%	0.57
	75%	0.70
	100%	0.77

		Drive end	Non drive end
Bearing type	:	6205 2RS	6204 2RS
Sealing	:	Oil Seal	Lip Seal
Lubrication interval	:	-	-
Lubricant amount	:	-	-
Lubricant type	:	Mobil Polyrex EM	

Foundation loads

Max. traction : 27 kgf

Max. compression : 59 kgf

Notes

This revision replaces and cancel the previous one, which must be eliminated.
(1) Looking the motor from the shaft end.
(2) Measured at 1m and with tolerance of +3dB(A).
(3) Approximate weight subject to changes after manufacturing process.
(4) At 100% of full load.

These are average values based on tests with sinusoidal power supply, subject to the tolerances stipulated in NEMA MG-1.

Rev.	Changes Summary	Performed	Checked	Date

Performed by				
Checked by			Page	Revision
Date	17/05/2022		1 / 3	

This document is exclusive property of WEG S/A. Reprinting is not allowed without written authorization of WEG S/A.
Subject to change without notice

Customer :

Thermal protection

ID	Application	Type	Quantity	Sensing Temperature
1	Winding	Thermostat - 2 wires	1 x Phase	155 ºC

Rev.	Changes Summary	Performed	Checked	Date

Performed by				
Checked by			Page	Revision
Date	17/05/2022		2 / 3	

This document is exclusive property of WEG S/A. Reprinting is not allowed without written authorization of WEG S/A.
Subject to change without notice

LOAD PERFORMANCE CURVE

Three Phase Induction Motor - Squirrel Cage

Customer	:

Product line	: NEMA Premium Efficiency Three-Phase	Product code :	14337968

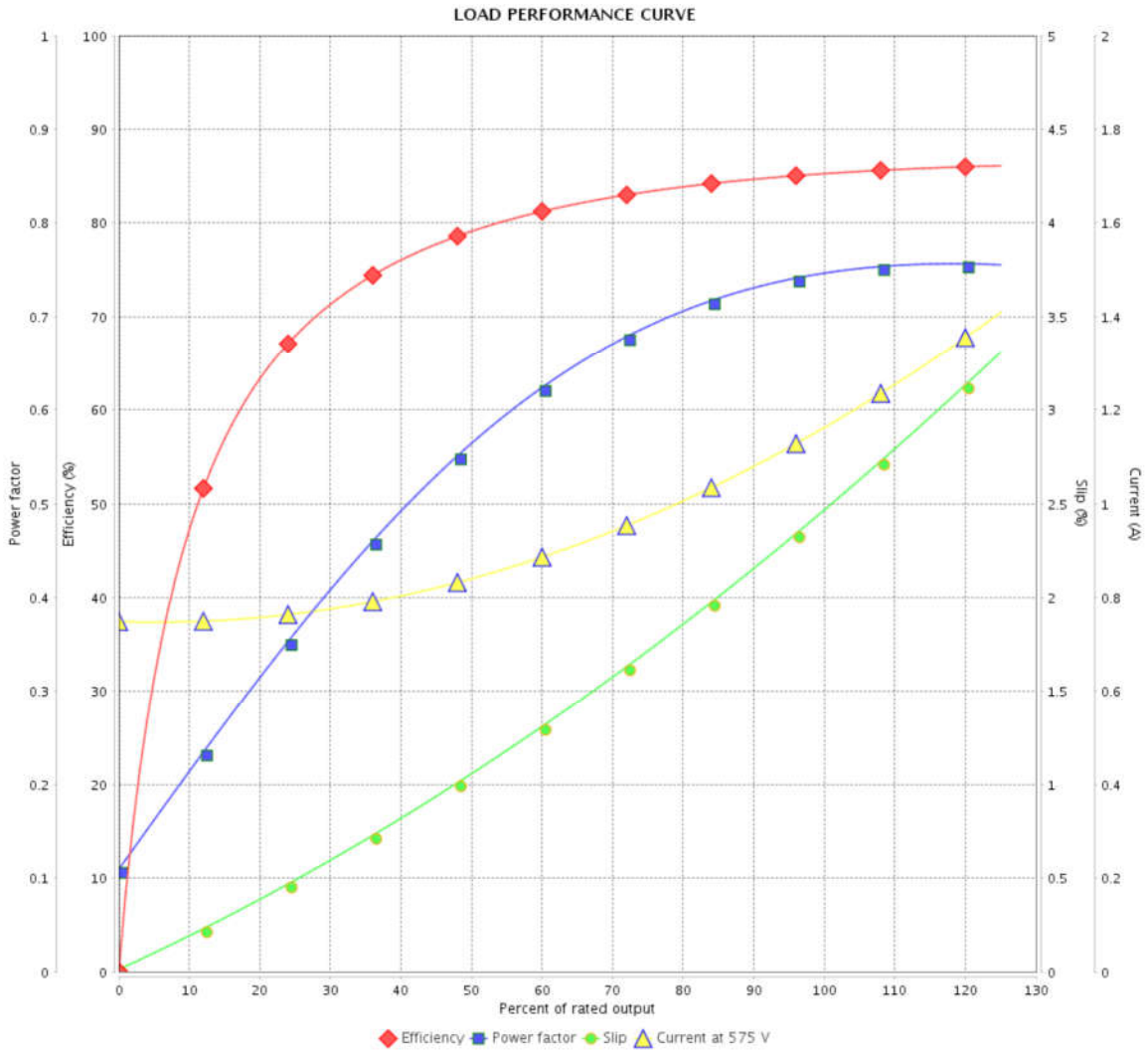

Performance	: 575 V 60 Hz 4P

Rated current	: 1.14 A	Moment of inertia (J)	: 0.0041 kgm²
LRC	: 8.6	Duty cycle	: Cont.(S1)
Rated torque	: 0.414 kgfm	Insulation class	: F
Locked rotor torque	: 290 %	Service factor	: 1.15
Breakdown torque	: 370 %	Temperature rise	: 80 K
Rated speed	: 1760 rpm	Design	: B

Rev.	Changes Summary	Performed	Checked	Date

Performed by				
Checked by			Page	Revision
Date	17/05/2022		3 / 3	

This document is exclusive property of WEG S/A. Reprinting is not allowed without written authorization of WEG S/A.
Subject to change without notice

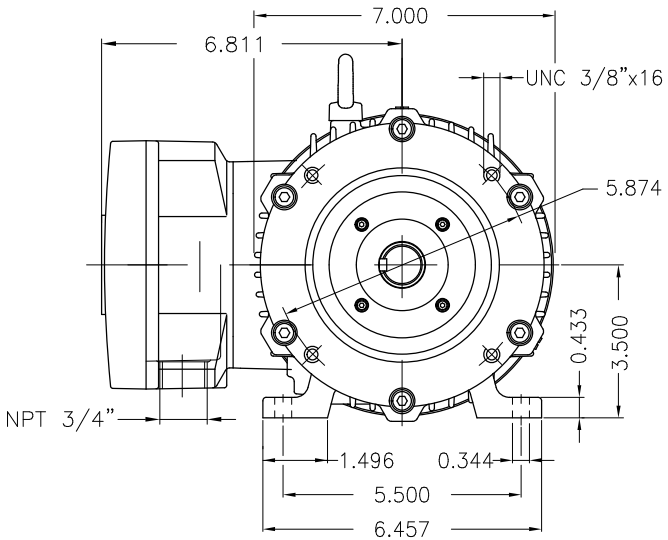

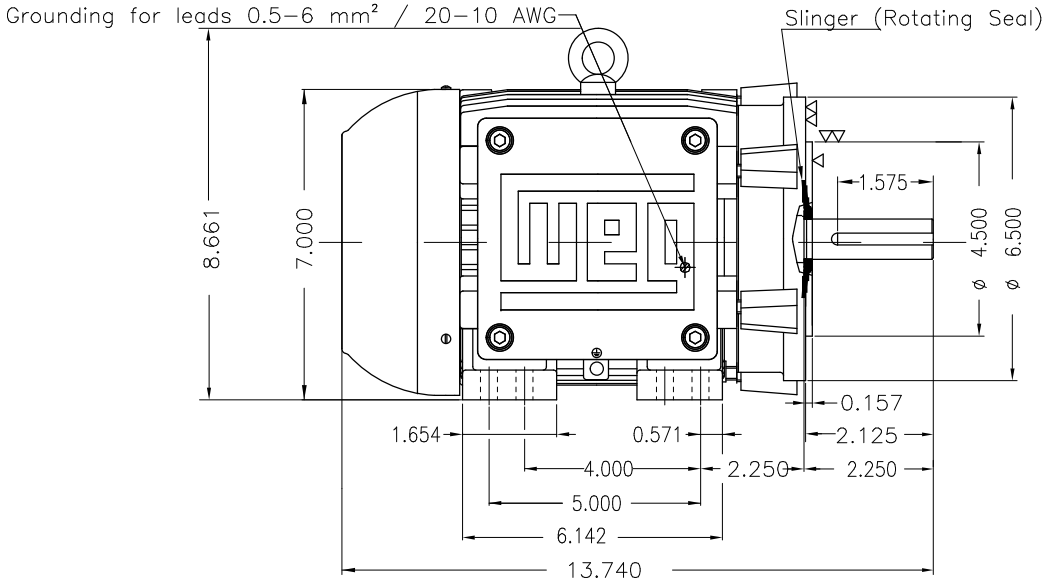

DE Shaft End

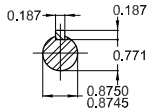

Color RAL 5009
Painting plan 202P
Mounting NEMA F-1
Mounting B34R(D)

1 HP 04 Poles 60 Hz | A

ECM	LOC	SUMMARY OF MODIFICATIONS	EXECUTED	CHECKED	RELEASED	DATE	VER

EXECUTED DATAVIEWERUSER
CHECKED
RELEASED
REL DT.

THREE PH. MOTOR EXPLOSION PROOF PREM. EFF.
FRAME 143/5TC IP55 TEFC

PREVIEW
WDD

WMO Jaragua do Sul Product Engineering

SHEET 1 / 1

Dimensions in Inches
XME A3

WEG's property. Forbidden reproduction without previous authorization.

MOTORS AND DRIVES

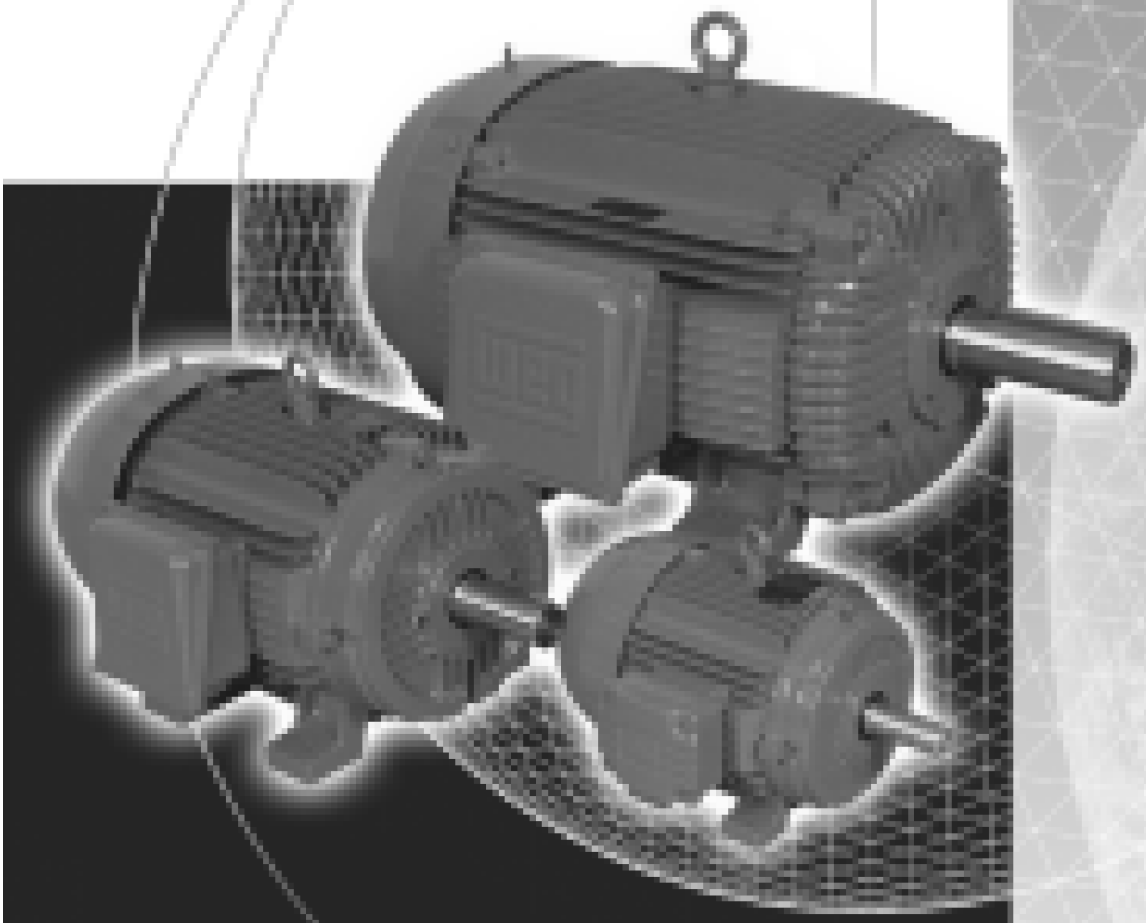

INSTALLATION AND MAINTENANCE INSTRUCTIONS FOR ELECTRIC MOTORS

Frames 143/5T - 586/7T

QUALITY SYSTEM ISO9001 WEG MOTORES

ISO 9001



READ CAREFULLY THIS MANUAL BEFORE INSTALLING THE MOTOR.

RECEIVING CHECK

✓ Check if any damage has occured during transportation.
✓ Check nameplate data.
✓ Remove shaft locking device (if any) before operating the motor.
✓ Turn the shaft with the hand to make sure if it is turning freely.

HANDLING AND TRANSPORTATION

1 - General



MOTORS MUST NOT BE LIFTED BY THE SHAFT, BUT BY THE EYE BOLTS WHICH ARE PROPERLY DESIGNED TO SUPPORT THE MOTOR WEIGHT.

Lifting devices, when supplied, are designed only to support the motor. If the motor has two lifting devices then a double chain must be used to lift it.

Lifting and lowering must be done gently without any shocks, otherwise the bearings can get damaged.



DURING TRANSPORTATION, MOTORS FITTED WITH ROLLER OR ANGULAR CONTACT BEARINGS ARE PROTECTED AGAINST BEARING DAMAGES WITH A SHAFT LOCKING DEVICE.



THIS LOCKING DEVICE MUST BE USED ON ANY FURTHER TRANSPORT OF THE MOTOR, EVEN WHEN THIS MEANS TO UNCOPULE THE MOTOR FROM THE DRIVEN MACHINE.

STORAGE

If motors are not immediately installed, they must be stored in dry places, free of dust, vibrations, gases, corrosive smokes, under constant temperature and in normal position free from other objects.

In case the motors are stored for more than two years, the bearings must be changed or the lubrication grease must be totally replaced after cleaning.

Single phase motors when kept in stock for 2 years or more must have their capacitors replaced (if any).

We recommend to turn the shaft (by hands) at least once a month, and to measure the insulation resistance before installing it, in cases of motors stored for more than 6 months or when subject to high humidity areas.

If motor is fitted with space heaters, these should be switched on.

Insulation Resistance Check

Measure the insulation resistance before operating the motor and/or when there is any sign of humidity in the winding.

The resistance measured at 25°C (77°F) must be:

Ri > (20 x U) / (1000 + 2P) [Mohm] (measured with a MEGGER at 500 V d.c.); where U = voltage (V); P = power (kW).

If the insulation resistance is less than 2 megaohms, the winding must be dried according to the following:
✓ Warm it up inside an oven at a minimum temperature of 80°C (176°F) increasing 5°C (41°F) every hour until 105°C (221°F), remaining under this temperature for at least one hour. Check if the stator insulation resistance remains constant within the accepted values. If not, stator must be reimpregnated.

INSTALLATION

1 - Safety

All personnel involved with electrical installations, either handling, lifting, operation or maintenance must be well informed and up-to-dated concerning the safety standard and principles that govern the work and carefully follow them.

We strongly recommend that these jobs are carried out by qualified personnel.



MAKE SURE THAT THE ELECTRIC MOTORS ARE SWITCHED OFF BEFORE STARTING ANY MAINTENANCE SERVICE.

Motors must be protected against accidental starts.

When performing any maintenance service, disconnect the motor from the power supply. Make sure all accessories have been switched off and disconnected.

Do not change the regulation of the protecting devices to avoid damaging.



LEAD CONNECTION IN SULATION INSIDE THE TERMINAL BOX MUST BE DONE WITH AN INSULATING MATERIAL COMPATIBLE WITH MOTOR THERMAL CLASS WHICH IS SHOWN ON THE MOTOR NAMEPLATE.

2 - Operating Conditions

Electric motors, in general, are designed for operation at an altitude of 1000m above sea level for an ambient temperature between 25°C (77°F) and 40°C (104°F). Any variation is stated on the nameplate.



COMPARE THE CURRENT, VOLTAGE, FREQUENCY, SPEED, OUTPUT AND OTHER VALUES DEMANDED BY THE APPLICATION WITH THE DATA GIVEN ON THE NAMEPLATE.

Motors supplied for hazardous locations must be installed in areas that comply with that specified on the motor nameplate.



KEEP AIR INLET AND OUTLET FREE AND CLEAN. THE AIR BLOWN OUT BY THE MOTOR SHALL NOT ENTER AGAIN. THE DISTANCE BETWEEN THE AIR INLET AND THE WALL MUST BE AROUND ¼ OF THE INLET OPENING DIAMETER.

3 - Foundation

Motors provided with feet must be installed on though foundations to avoid excessive vibrations.

The purchaser is fully responsible for the foundation.

Metal parts must be painted to avoid corrosion.

The foundation must be uniform and sufficiently tough to support any short circuit strengths. It must be designed in such a way to stop any vibration originated from resonance.

4 - Drain Holes

Make sure the drains are placed in the lower part of the motor when the mounting configuration differs from that specified on the motor purchase order.

5 - Balancing

WEG MOTORS ARE DYNAMICALLY BALANCED, WITH HALF KEY AT NO LOAD AND UNCOUPLED.

Transmission elements such as pulleys, couplings, etc must be dynamically balanced with half key before installation. Use always appropriate tools for installation and removal.

6 - Alignment

ALIGN THE SHAFT ENDS AND USE FLEXIBLE COUPLING, WHENEVER POSSIBLE.

Ensure that the motor mounting devices do not allow modifications on the alignment and further damages to the bearings.

When assembling a half-coupling, be sure to use suitable equipment and tools to protect the bearings.

Suitable assembly of half-coupling: check that clearance Y is less than 0.05mm and that the difference X1 to X2 is less than 0.05m as well.

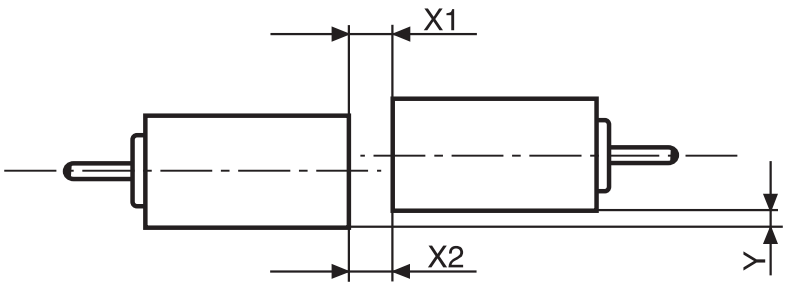

Note: The "X" dimension must be at least 3mm.

7 - Belt Drive

When using pulley or belt coupling the following must be observed:
✓ Belts must be tighten just enough to avoid slippage when running, according to the specifications stated on the belt supplier recommendation.

WARNING:
Excessive tension on the pulleys will damage the bearings and lead to a probable shaft rupture.

8 - Connection

WARNING: Voltage may be connected at standstill inside the terminal box for heating elements or direct winding heating.

WARNING: The capacitor on single-phase motors can retain a charge which appears across the motor terminals, even when the motor has reached standstill.



A WRONG CONNECTION CAN BURN THE MOTOR.

Voltage and connection are indicated on the nameplate. The acceptable voltage variation is ± 10%, the acceptable frequency variation is ± 5% and the total acceptable variation is ± 10%.

9 - Starting Methods

The motor is rather started through direct starting. All Weg motors must be connected as shown on the motor nameplate, failure to follow the motor nameplate could lead to motor failure.

In case this is not possible, use compatible methods to the motor load and voltage.

✓ 3 lead single voltage and 9 lead dual voltage motors can be started as follows:
Full Voltage Direct On Line.
Auto-Transformer Starting.
Electronic Soft-Starting.
VFD Starting - subject to verification and application analysis.

✓ 6 lead single voltage motors and 12 lead dual voltage motors can be connected as follows:
Full Voltage Direct On Line.
WYE/DELTA Starting.
Auto-Transformer Starting.
Electronic Soft-Starting.
VFD Starting - subject to verification and application analysis.

The rotation direction is clockwise if the motor is viewed from DE side and if the phases are connected according to the sequence L1, L2, L3.

To change the rotation direction, interchange two of the connecting leads.



THE CONNECTION TO THE POWER SUPPLY MUST BE DONE BY QUALIFIED PERSONNEL AND WITH FULL ATTENTION TO ASSURE A SAFE AND PERMANENT CONNECTION. AFTER CONNECTING THE MOTOR, CHECK FOR ANY STRANGE BODY INSIDE THE TERMINAL BOX. THE CABLE INLETS NOT IN USE MUST BE CLOSED.

Make sure to use the correct cable dimension, based on the rated current stamped on the motor nameplate.



BEFORE ENERGIZING THE TERMINALS, CHECK IF THE EARTHING IS MADE ACCORDING TO THE ACTUAL STANDARDS. THIS IS ESSENTIAL AGAINST ACCIDENT RISKS.

When the motor is supplied with protective or monitor temperature device such as thermostats, thermistors, thermal protector, etc, connect their terminals to the corresponding devices on the control panel.

10- Start-Up



THE KEY MUST BE FASTENED OR REMOVED BEFORE STARTING THE MOTOR.

a) The motor must start and operate smoothly. In case this does not occur, turn it off and check the connections and the mounting before starting it again.

b) If there is excessive vibration, check if the fastening screws are correctly fastened. Check also if the vibration comes from a neighbour machine. Periodical vibration checks must be done.

c) Run the motor under rated load for a short period of time and compare if the running current is equal to that stamped on the nameplate.

MAINTENANCE



WARNING:
SAFETY CHECK LIST.

1 - General Inspection

- ✓ Check the motor periodically.
- ✓ Keep the motor clean and assure free air flow.
- ✓ Check the seals or V Ring and replace them, if required.
- ✓ Check the connections as well as supporting screws.
- ✓ Check the bearings and observe:
  Any excessive noise, bearing temperature and grease condition.
- ✓ When a changing, under normal conditions, is detected, check the motor and replace the required parts.
  The frequency of the inspections depends on the motor type and on the application conditions.

LUBRICATION



FOLLOW THE REGREASING INTERVALS. THIS IS FUNDAMENTAL FOR PROPER MOTOR OPERATION.

1 - Machines without Grease Nipples

In these cases the regreasing shall be done at the preventive maintenance job observing the following aspects:

✓ Disassemble carefully the motors.
✓ Take all the grease out.
✓ Wash the bearing with querosene or diesel.
✓ Regrease the bearing immediately.

2 - Machines Fitted with Grease Nipples

It is strongly recommended to grease the machine while running. This allows the grease renewal in the bearing housing. When this is not possible due to turning parts by the grease device (pulleys, bushing, etc) that offer some risk to the physical integrity of the operator, proceed as follows:

✓ Clean the area near to the grease nipple.
✓ Put approximately half of the total grease and run the motor for 1 minute at full speed. Then turn off the motor and pump the rest of the grease.
✓ The injection of all the grease with the motor in standstill can make the grease penetrate into the motor, through the inner seal of the bearing housing.

When regreasing, use only special bearing grease with the following properties:

RELUBRICATION INTERVALS RECOMMENDED - POLYREX® EM GREASE (ESSO/EXXON)

Frame	Amount of grease (g)	3600 rpm	3000 rpm	1800 rpm	1500 rpm	1200 rpm	1000 rpm	900 rpm	750 rpm	720 rpm	600 rpm	500 rpm
Relubrication intervals in hours - ball bearings												
254/6T	*13*	*15700*	*18100*	*20000*	*20000*	*20000*	*20000*	*20000*	*20000*	*20000*	*20000*	*20000*
284/6T	*18*	*11500*	*13700*	*20000*	*20000*	*20000*	*20000*	*20000*	*20000*	*20000*	*20000*	*20000*
324/6T	*21*	*9800*	*11900*	*20000*	*20000*	*20000*	*20000*	*20000*	*20000*	*20000*	*20000*	*20000*
364/5T	*27*	*3600*	*4500*	*9700*	*11600*	*14200*	*16400*	*17300*	*19700*	*20000*	*20000*	*20000*
404/5TS	*27*	*3600*	*4500*	*9700*	*11600*	*14200*	*16400*	*17300*	*19700*	*20000*	*20000*	*20000*
444/5TS	*27*	*3600*	*4500*	*9700*	*11600*	*14200*	*16400*	*17300*	*19700*	*20000*	*20000*	*20000*
504/5TS	*27*	*3600*	*4500*	*9700*	*11600*	*14200*	*16400*	*17300*	*19700*	*20000*	*20000*	*20000*
586/7TS	*27*	*3600*	*4500*	*9700*	*11600*	*14200*	*16400*	*17300*	*19700*	*20000*	*20000*	*20000*
Relubrication intervals in hours - cylindrical roller bearings												
324/5T	*21*	*9800*	*11900*	*20000*	*20000*	*20000*	*20000*	*20000*	*20000*	*20000*	*20000*	*20000*
364/5T	*27*			*9700*	*11600*	*14200*	*16400*	*17300*	*19700*	*20000*	*20000*	*20000*
404/5T	*34*			*6000*	*7600*	*9500*	*11600*	*13800*	*15500*	*15500*	*17800*	*20000*
444/5T	*45*			*4700*	*6000*	*7600*	*9800*	*12200*	*13700*	*13700*	*15700*	*20000*
447/5T	*45*			*4700*	*6000*	*7600*	*9800*	*12200*	*13700*	*13700*	*15700*	*20000*
504/5T	*45*			*4700*	*6000*	*7600*	*9800*	*12200*	*13700*	*13700*	*15700*	*20000*
586/7T	*60*			*3300*	*4400*	*5900*	*7800*	*10700*	*11500*	*11500*	*13400*	*17300*

WARNING:

The table above is specifically intended for relubrication with Polyrex® EM grease and bearing absolute operating temperature of:

✓ 70°C (158°F) for 254/6T to 324/6T frame motors;
✓ 85°C (185°F) for 364/5T to 586/7T frame motors.

For every 15°C (59°F) above these limits, relubrication interval must be reduced by half.

Shielded bearing (ZZ) are lubricated for bering's life as long as they operate under normal ambient conditions and temperature of 70°C(158°F).



WE RECOMMEND TO USE BALL BEARINGS FOR MOTORS DIRECTLY COUPLED TO THE LOAD.



WARNING:
EXCESS OF GREASE CAN CAUSE BEARING OVERHEATING RESULTING IN COMPLETE DAMAGE.

Compatibility of Polyrex® EM grease with other types of grease:

Containing polyurea thickener and mineral oil, the Polyrex® EM grease is compatible with other types of grease that contain:

- ✓ Lithium base or complex of lithium or polyurea and highly refined mineral oil;
- ✓ Inhibitor additive against corrosion, rust and anti-oxidant additive.

Notes:

- ✓ Although Polyrex® EM is compatible with the types of grease given above, we do no recommend to mix it with any other greases.
- ✓ If you intend to use a type of grease different than those recommended above, first contact WEG.
- ✓ On applications (with high or low temperatures, speed variation, etc), the type of grease and relubrication interval are given on an additicional nameplate attached to the motor.
- ✓ Vertical mounted motors must have the relubrication intervals reduced by half.



THE USE OF STANDARD MOTORS IN SPECIFIC AREAS OR SPECIAL APPLICATIONS MUST BE DONE BY CONSULT TO THE GREASE MANUFACTURER OR WEG.

ASSEMBLY AND DISASSEMBLY

Disassembly and assembly must be done by qualified personnel using only suitable tools and appropriated methods. The stator grips must be applied over the side face of the inner ring to be disassembled or over and adjacent part.

It is essential that the bearings disassembly and assembly be done under cleanning conditions to ensure good operation

and to avoid damages. New bearings shall only be taken out from their cases when assembling them.

Before installing a new bearing it is required to check the shaft fitting for any sharp edge or strike signals.

For bearing assembly, warm their inner parts with suitable equipment - inductive process - or use suitable tools.

SPARE PARTS

When ordering spare parts, please specify the full type designation and product code as stated on the motor nameplate.

Please also inform the motor serial number stated on the nameplate.

MOTORS FOR HAZARDOUS LOCATIONS

Besides the recommendations given previously, these ones must be also followed:



THE SPECIFICATION OF THE MOTOR INSTALLATION PLACE IS FOR CUSTOMER'S RESPONSIBILITY, WHO WILL ALSO DETERMINE THE ENVIRONMENT CHARACTERISTICS.

Motors for hazardous locations are manufactured according to specific standards for such environments and they are certified by worldwide certifying entities.

1 - Installation

The complete installation must follow procedures given by the local legislation in effect.



THE INSTALLATION OF HAZARDOUS LOCATION MOTORS MUST BE CARRIED OUT BY SKILLED PEOPLE, AND THE THERMAL PROTECTION MUST BE ALWAYS INSTALLED, EITHER INSIDE OR OUTSIDE THE MOTOR, OPERATING AT THE RATED CURRENT.

2 - Maintenance

Maintenance must be carried out by repair shops authorized by WEG.

Repair shops and people without WEG's authorization who will perform any service or hazardous location motors will be fully responsible for such service as well as for any consequential damage.



ANY ELECTRICAL OR MECHANICAL MODIFICATION MADE ON HAZARDOUS LOCATION MOTORS WILL VOID THE CERTIFICATION.

When performing maintenance, installation or relubrication, follow these instructions:

- ✓ Check if all components are free of edges, knocks or dirt.
- ✓ Make sure all parts are in perfect conditions.
- ✓ Lubricate the surfaces of the endshield fittings with protective oil to make the assembly easier.
- ✓ Use only rubber hammer to fit the parts.
- ✓ Check for correct bolts tightening.
- ✓ Use clearance calibrator for correct T-box fitting (smaller than 0.05mm).



DO NOT REUSE DAMAGED OR WORN PARTS. REPLACE THEM BY NEW ONES SUPPLIED BY THE FACTORY.

MOTORS DRIVEN BY VFD

Applications using VFD´s without filter can affect motor performance as follows:

- ✓ Lower efficiency.
- ✓ Higher vibration.
- ✓ Higher noise level.
- ✓ Higher rated current.
- ✓ Higher temperature rise.
- ✓ Reduced motor insulation.
- ✓ Reduced bearing life.

1 - Standard Motors

- ✓ Voltages lower than 440V do not require filter.
- ✓ Voltages equal or higher than 440V or lower than 575V require filter for motor power supply cables longer than 20 meters.
- ✓ Voltages equal or higher than 575V require filter for any size of power supply cables.



IF SUCH RECOMMENDATIONS ARE NOT FOLLOWED ACCORDINGLY, MOTOR WARRANTY WILL BE VOID.

2 - Inverter Duty Motors

- ✓ Check power supply voltage of the forced cooling set.
- ✓ Filters are not required.

WARRANTY TERMS
SERIES AND ENGINEERING PRODUCTS

WEG warrants its products against defects in workmanship and materials for 18 months from the invoice date issued by the factory, authorized distributor or agent limited to 24 months from manufacturing date independent of installation date as long as the following items are fulfilled accordingly:
- Proper transportation, handling and storage;
- Correct installation based on the specified ambient conditions and free of corrosive gases;
- Operation under motor capacity limits;
- Observation of the periodical maintenance services;
- Repair and/or replacement effected only by personnel duly authorized in writing by WEG;
- The failed product be available to the supplier and/or repair shop for a required period to detect the cause of the failure and corresponding repair;
- Immediate notice by the purchaser about failures occured and that these are accepted by WEG as manufacturing defects.

This warranty does not include disassembly services at the urchaser facilities, transportation costs with product, tickets, accomodation and meals for technical personnel when requested by the customer. The warranty service will be only carried out at WEG Authorized Repair Shops or at WEG´s facilities.

Components whose useful life, under normal use, is shorter than the warranty period are not covered by these warranty terms.

The repair and/or replacement of parts or components, when effected by WEG and/or any WEG Authorized Repair Shop, will not give warranty extension.

This constitutes WEG´s only warranty in connection with this sale and the company will have no obligation or liability whatsoever to people, third parties, other equipment or installations, including without limitation, any claims for consequential damages or labor costs.

Technologies for Clean Water
Wastewater, Biosolids, and Biogas Treatment

H2FLOW EQUIPMENT INC.

Section 3.6.4

Sludge Dewatering System

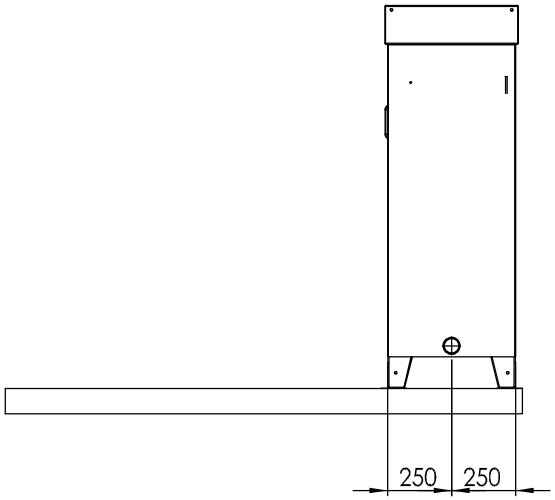

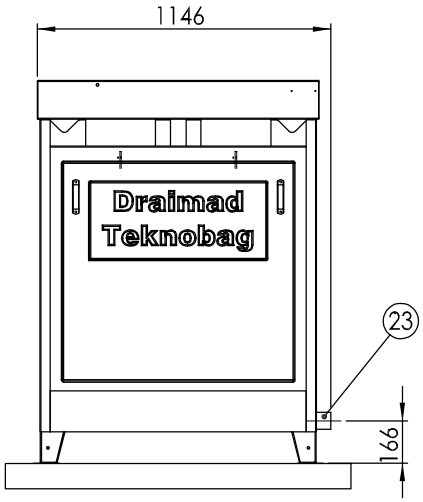

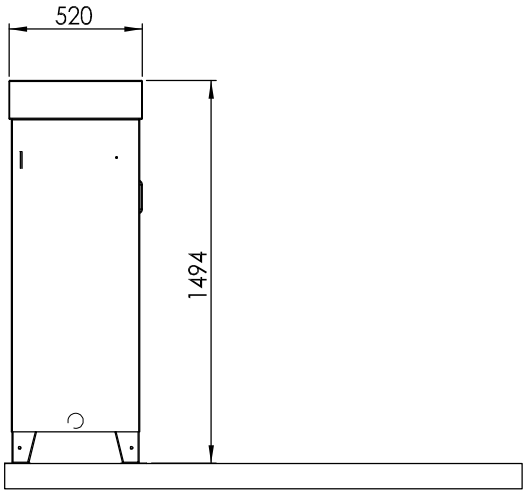

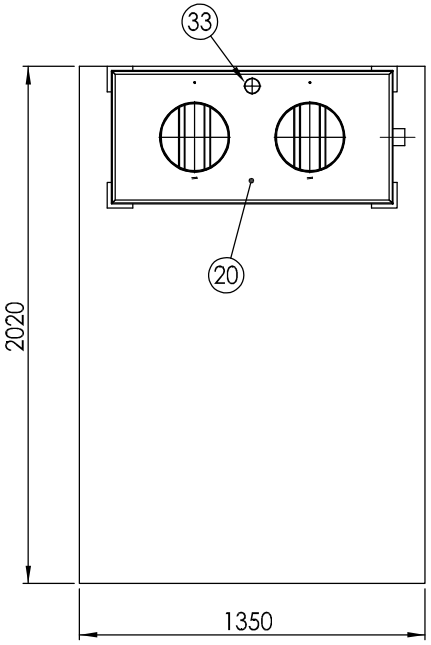

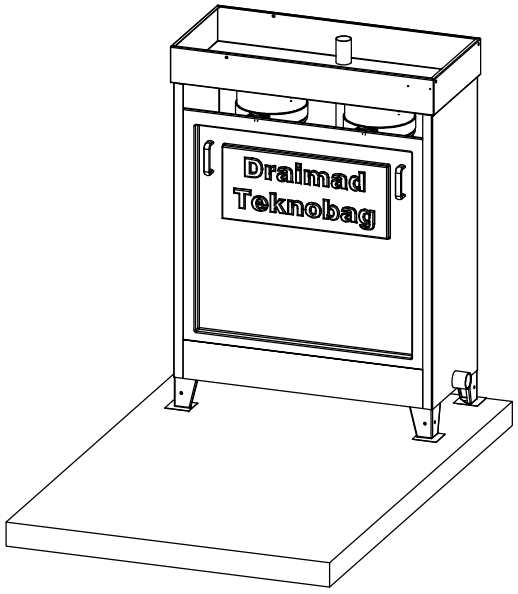

Recommended minimum working height: 2,5 mt

	DESCRIPTION	DESCRIZIONE
20	SLUDGE INLET	INGRESSO FANGHI
23	FILTRATE OUTLET	SCARICO FILTRATO
33	OVERFLOW	TROPPO PIENO

Teknofanghi S.r.l.
Via Brescia,18 Cernusco sul Naviglio 20063 (MI) ITALIA
Tel. +39 0292143037 Fax +39 0292143038 Web: www.teknofanghi.com

DATE: 01/02/2011 | DIMENSIONS NOT BINDING
REVISION: 00 | OUR REF.
CUSTOMER:
.

TITLE:
Filtering module TEKNOBAG DRAIMAD
type 02BM

DWG NO. 02BM | A3

SCALE: 1:20 | SHEET: 1 OF 1

The information contained in this drawing are the sole property of Teknofanghi s.r.l., any reproduction in part or as a whole without written permission is prohibited.

Teknofanghi

TEKNOBAG-DRAIMAD®

BM

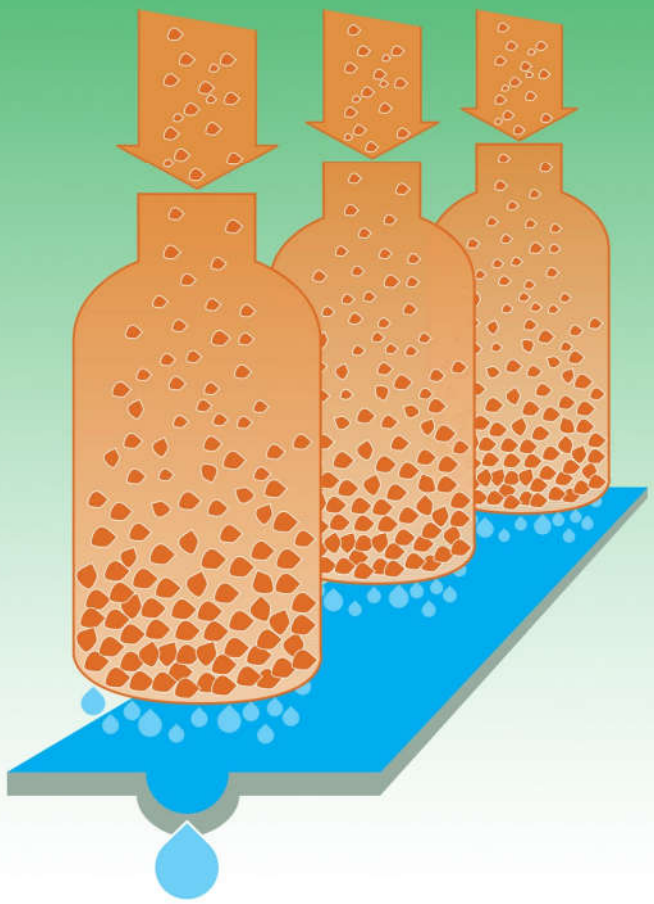

ACCERTA
UNI EN ISO
9001:2015

Since
1987

Teknofanghi S.r.l. / Via Brescia 18, 20063, Cernusco S/N, (Milano), Italy
C.F. - P.IVA: 08969100158 / R.I. di Milano N.277169 / Cap. Soc. 25.850,00 i.v. / R.E.A. 1264620
Tel. +39 02 92143037 / Fax +39 02 92143038 / E-mail: info@teknofanghi.it / Web: www.teknofanghi.it

This guide refers to models: **“02BM”; “03BM”; “06BM”.**

Before installing the machine, the user must:

- have identified the type of the machine (see the metal label “0”).
- have prepared the area of the installation according the drawing of the “foundation” and of the “dimensions”.
- have identified the operators which will carry out the installation, the first start up and the daily usage of the machine.

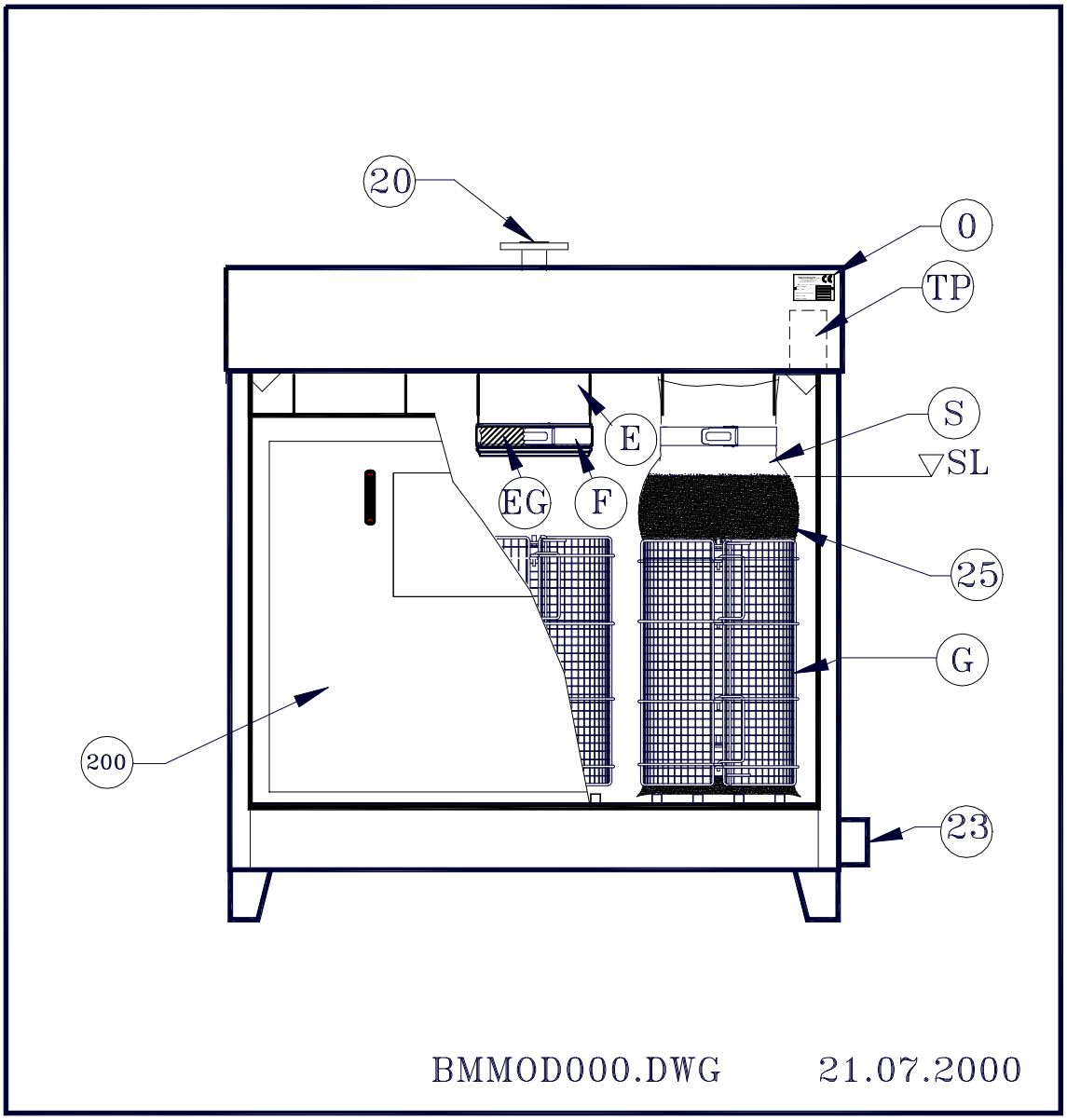

INTENDED USES OF THE MACHINE AND PROHIBITED USES

The TEKNOBAG®-DRAIMAD® are machines for dewatering sludge coming from any waste water treatment plant.

The sludge must be stabilised, with neutral pH and with a temperature between 10°C and 30°C.

Average treatment capacities of the TEKNOBAG®-DRAIMAD® are indicated in the table below. Please note that these values are obtained with a well flocculated sludge and that they can vary on the basis of the different specific characteristics of the sludge to be treated.

TEKNOBAG®-DRAIMAD®	Hydraulic flow (m^3/h)	Dry Solids (%)	m^3/day (D.S. 1%)	D.S./day (Kg)
02BM	1 – 2	0,5 - 4	2 – 4	10 - 20
03BM	1 – 3	0,5 - 4	3 – 6	15 – 30
06BM	2 - 6	0,5 - 4	6 – 12	30 - 60

The TEKNOBAG®-DRAIMAD® can dewater sludge without a previous treatment with flocculant, even though with poorer result.

It is not permitted:
To treat or use substances with different chemical, physical and biological properties from those indicated above;
To tamper with the safety guards and devices;
To modify any of the parts of the machine mentioned in this handbook;
To use power supply (electric, hydraulic, pneumatics) with different characteristics from the ones shown in this handbook.



WARNING! **The characteristics of the sludge generated by the waste water treatment plants make it possible to be exposed to hazardous chemical/biological substances.**
Users and operators must be aware.
All the operators must be familiar with the potential hazards connected with the sludge being dewatered, and how to protect themselves.

TEKNOFANGHI will not be held responsible for damage to persons and/or property and/or to the machine itself due to non-implemented and/or inadequate safety precautions.

INSTALLATION

Refer to drawing at back of the frontal cover:

- Connect to point 20 the sludge supply line using a pipe flanged DN50 PN10 UNI2277 (Model "02BM" has no connection flange, provide a pipe over the upper tank to allow the filling). Fasten the piping so that they are not supported by the machine.

- Connect to the filtrate outlet (point 23) a gasketed plastic pipe DN100 UNI 8320 DIN19560 DIN4102-B1 (Model "02BM" has a 2" GF manifold).

- Provide the installation of a control panel to start / stop the sludge and polyelectrolyte pumps. If the supply of the sludge is made by gravity feeding, provide the installation of an interception valve.

Once that all above indicated has been done, the installation is complete.

DAILY USAGE

Operators must follow the instructions below, in order to properly operate the TEKNOBAG®-DRAIMAD® daily.

On the TEKNOBAG®-DRAIMAD® unit must be installed the TEKNOBAG®-DRAIMAD® bags (see point S): follow the table here below reported to operate the removal / installation of the bags. If some clumps of sludge are present inside the bag enclosure, remove them by means of the water hose.

Once that each funnel has its own new bag, the unit is ready to operate the dewatering: activate the sludge pump or open the interception valve in order to fill the bags (FILLING CYCLE). Stops the sludge before it arrives to the "TP" overflow outlet of the hood ("02BM" unit has the overflow in the middle of the hood).

Once the unit is filled, and the filtrate start to drain it does not need to be manned continuously, however visual checking is suggested (DRAINING CYCLE).

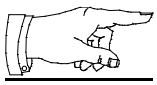

CAUTION: ***Before leaving the working machine, the operator must ensure that:***
The plant has no leaks.
The filtrate discharging from 23 is as clear as expected.
The sludge does not leak from around the clamps of the bags.

Once the level inside the bags is quite below the point "SL", it can be operated the FILLING CYCLE again. These two cycles should be repeated until the bag are full of dewatered sludge. After that it will be necessary to change the bags.

BAG REMOVAL AND STORAGE

OPERATION	EFFECT	DISPLAY
Look inside the top tank.	The top tank is empty.	The access of the funnels of the bags is visible.
Remove the safety guard which closes the access to the bags by pulling it towards the right then lift it and extract it from the unit	The bags are accessible.	It is possible to verify whether the level of the sludge is near point "SL" (see picture at page 1).
If the cages “G” are available, lift the fastening rod of one of them and open it.	The hand cart fork can enter up to the bag	The shield of the hand cart fork touches the bag.
Slide the hand cart fork under the bag and crank it up.	The bag is lifted off the bottom supports.	The bag does not touch the bottom supports.
Release the clamp "F".	The upper part of the bag is free.	It is possible to see inside the bag
Squeeze the bag together at the top of the sludge line.	The bag is ready to be sealed	
Wrap two wire ties together at the top of the sludge line.	The wire ties are ready to be tightened.	
Insert the tying tool into the loops and pull several times. Do not pull too much otherwise they will break.	The bag is sealed and can be easily removed and stacked.	
Remove the bag and lay it on a pallet.	The funnel of the unit is free.	
Stack the bags with one layer horizontally and the next perpendicularly and so on. The bags can be stacked as high as convenient. New bags can be stacked on old bags.	The bags are ready to be moved to the storage area before the disposal.	

Repeat this sequence for every bag. If some sludge drops are spilled, wash them away with the water hose.

INSTALLATION OF THE NEW BAGS

OPERATION	EFFECT	DISPLAY
Remove the bags from the carton.	Verify the integrity of the bag.	The bag has no holes or cuts or bad welding or bad sewing.
Open the clamp "F"; if available open also cages "G".	The operator can fit one bag	
Slip the bag "S" over the funnel nearly all the way to the top. Place the vertical seal of the bag to the rear. Holding the bag tight against the funnel at the front, pull the loose out and forward, and tuck under, to form a tight seal to the funnel.	The bag is ready to be clamped to the funnel "E"	The upper part of the bag touches the hood, the bottom part is perpendicular to the bottom support and the vertical seal is opposite to the operator.
Bring the clamp "F" around the bag and tighten	The bag is sealed to the funnel.	There are no gaps between the clamp and the bags, all around the funnel
Push the bottom of the bag into the cage, and slip the cage fastening rod through the loops provided on the cage.	The bag is ready to be filled.	The bag can be moved without entanglement in the cage.

Repeat this sequence for every bag. Once all the bags are fitted, replace the safety guard used to keep the filtrate splash inside the unit.

TROUBLE SHOOTING

PROBLEM	DIAGNOSIS	ACTION
During the "FILLING CYCLE" the sludge does not enter the bags	The sludge supply line is clogged or there is a problem with the sludge and polyelectrolyte pumps.	Check the sludge supply line and the rotation direction of the motor of the sludge pump.
There is leakage between a funnel and a clamp.	The clamp is not properly tightened or the gasket “EG is broken, missing or bad positioned.	At the next bag change, adjust the clamp grip so it tightens properly. Check whether the gasket is present.
There is a lot of sludge in the filtrate coming from the bags.	Bad flocculation.	Check the sludge and polyelectrolyte feeding rates and the flocculation.
The filtrate has a lot of foam.	Bad flocculation.	Check the sludge and polyelectrolyte feeding rates and the flocculation.

WEIGHTS AND CENTRE OF GRAVITY

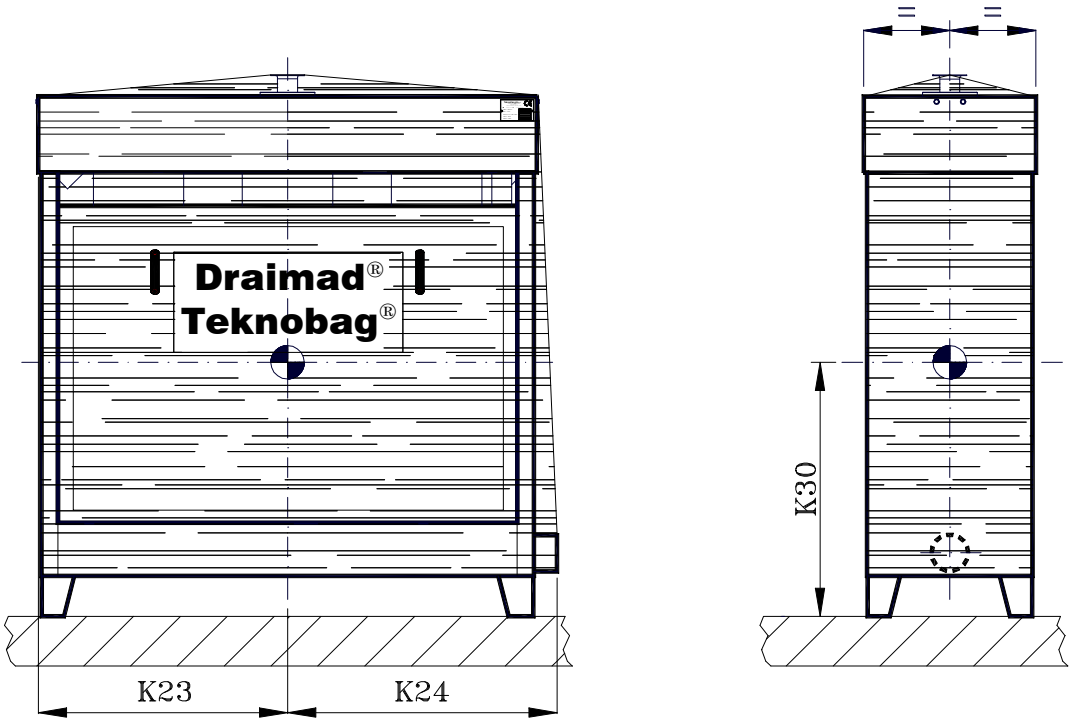

	K23	K24	K30	Kg. (*)
02BM	550	580	700	100
03BM	751	814	730	140
06BM	751	814	750	260

(*) Mass
Massa

Centre of gravity
Baricentro

BRCDR001M.DWG 02.10.2000

P&I

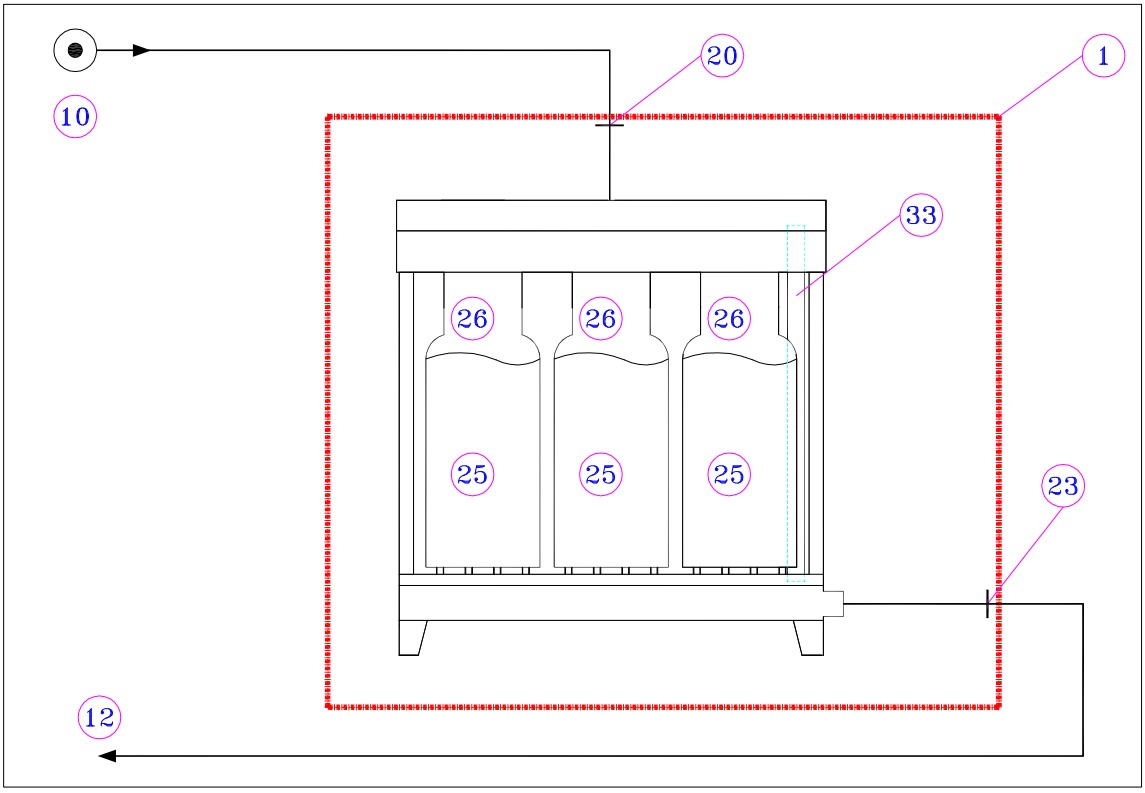

POS	DESCRIPTION
1	TEKNOFANGHI SUPPLY LIMIT
10	SLUDGE SUPPLY LINE
12	HEAD OF THE PLANT
20	SLUDGE INLET: OPEN ROOF (02BM – 02BMGR) FLANGE DN50 PN10 EN 1092-1 (03BM- 06BM)
23	FILTRATE OUTLET: 2" GF UNI ISO 228-1 (02BM/02BMGR) DN 100 PIPE COMPATIBLE WITH PLASTIC GASKETED PIPING, DN110 UNI 1451-1 DIN 19560 DIN 4102 B1 (03BM/06BM)
25	DEWATERED SLUDGE
26	TEKNOBAG®-DRAIMAD® BAG
33	OVERFLOW DN80

FOUNDATIONS AND DIMENSIONS "02BM" & "03BM"

	X	X1	Z1	Z2	Kg. (*)
02BM	1342	1034	−13.42	−33.62	450
03BM	1749	1441	−17.49	−37.69	700

(*) Full load weight
(*) Peso a pieno carico

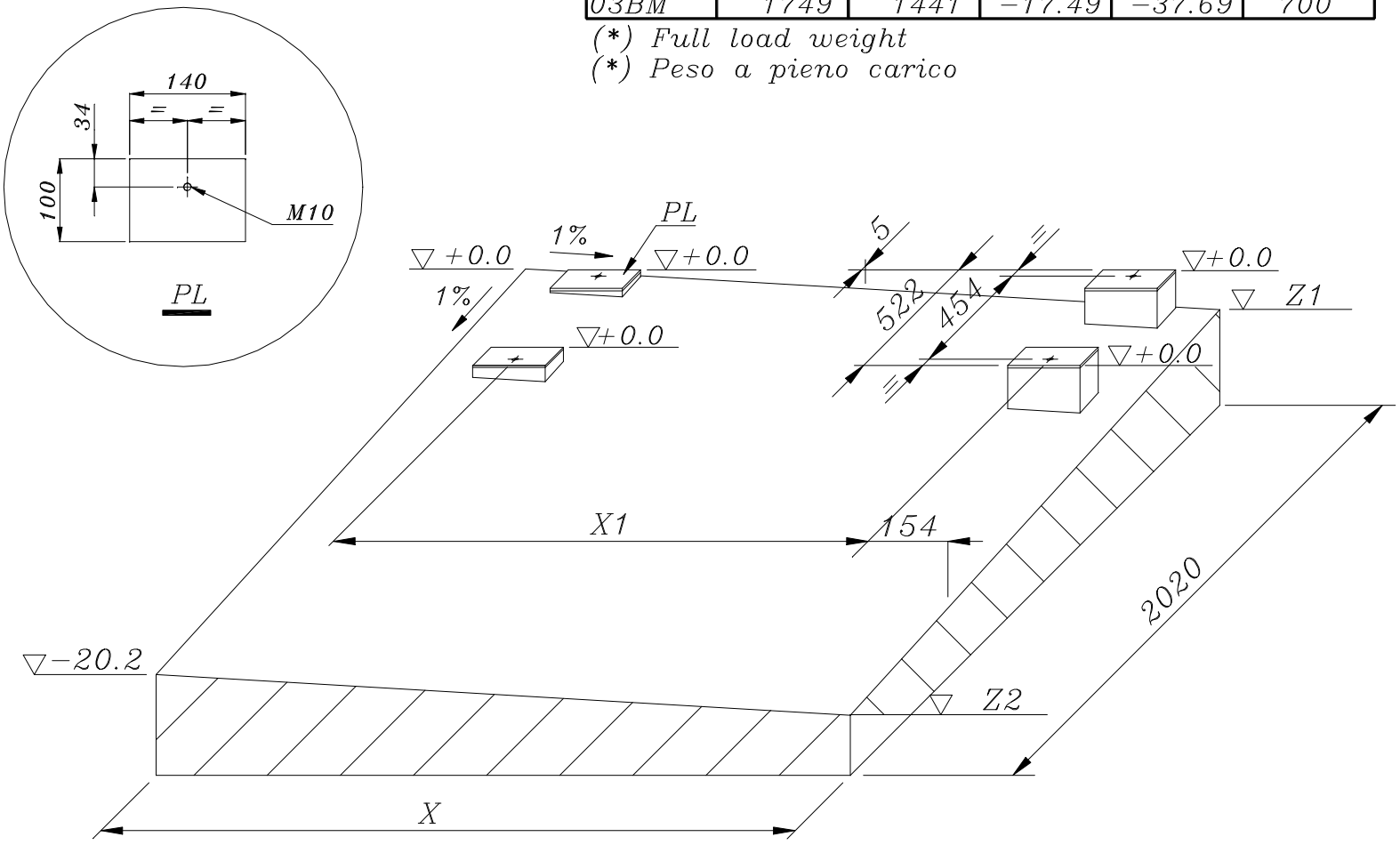

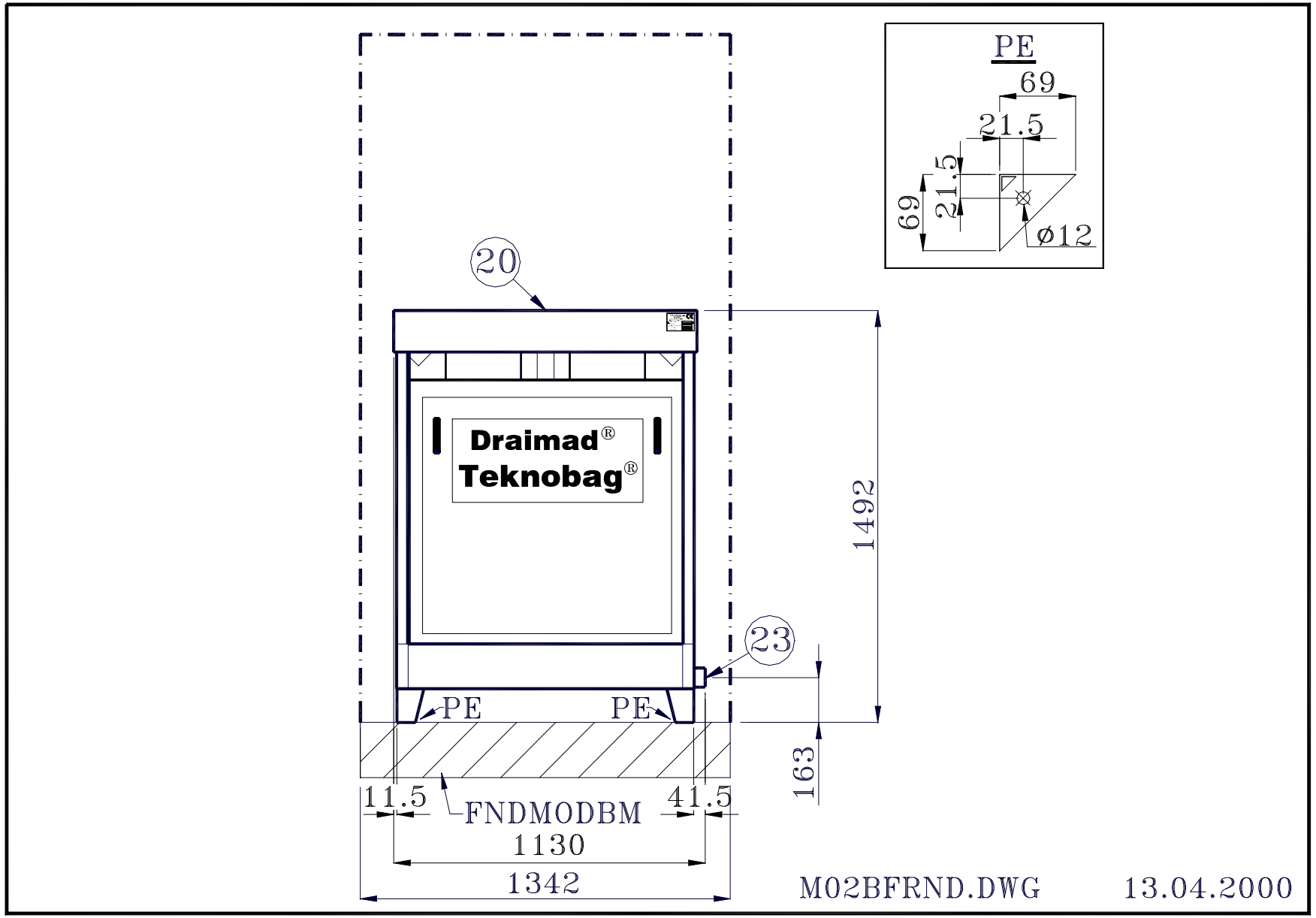
PE
69
21.5
21.5
69
ø12
20
Draimad®
Teknobag®
1492
23
PE
PE
163
11.5
FNDMODBM
41.5
1130
1342
M02BFRND.DWG
13.04.2000

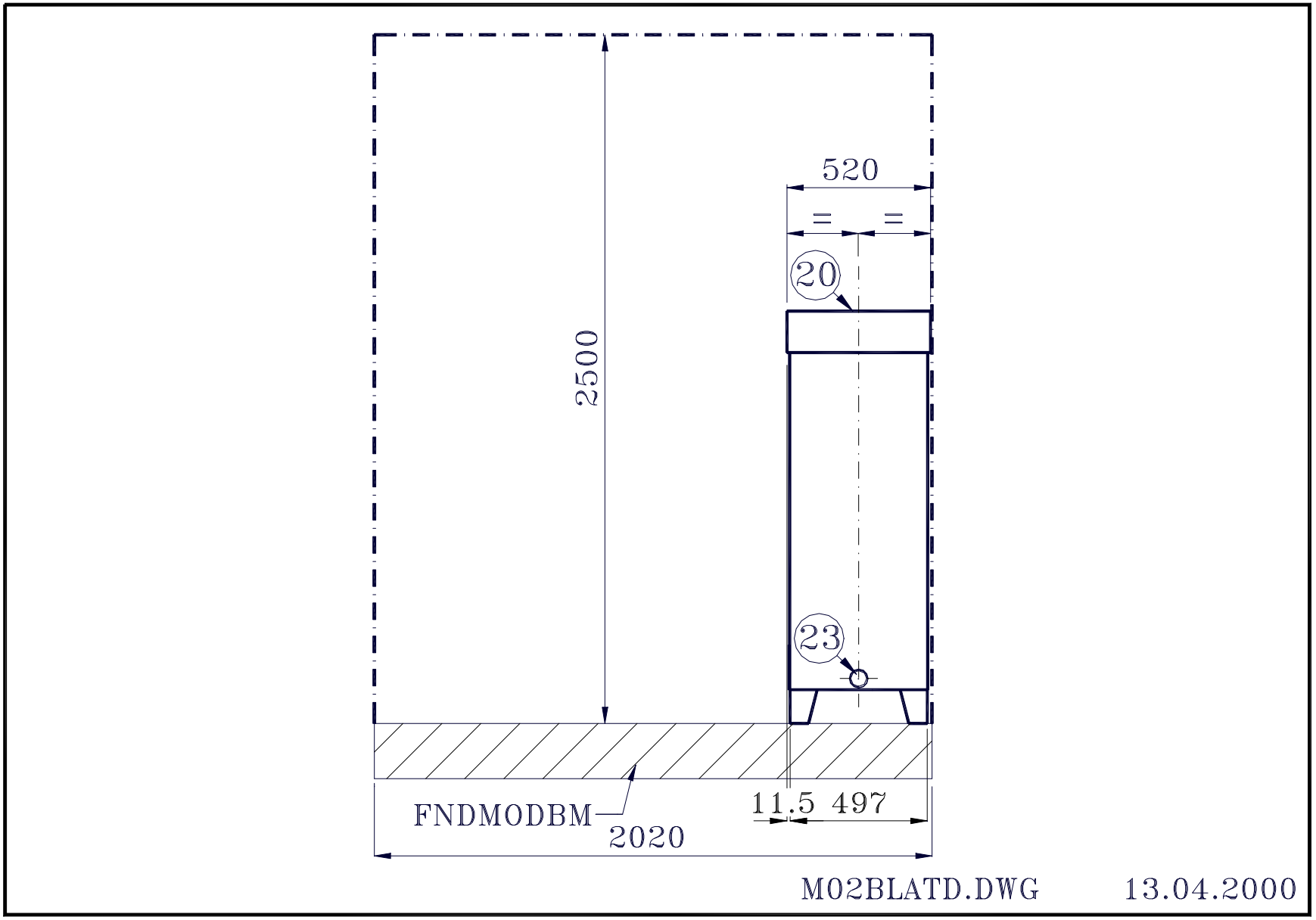
520
= =
20
2500
23
FNDMODBM
2020
11.5 497
M02BLATD.DWG 13.04.2000

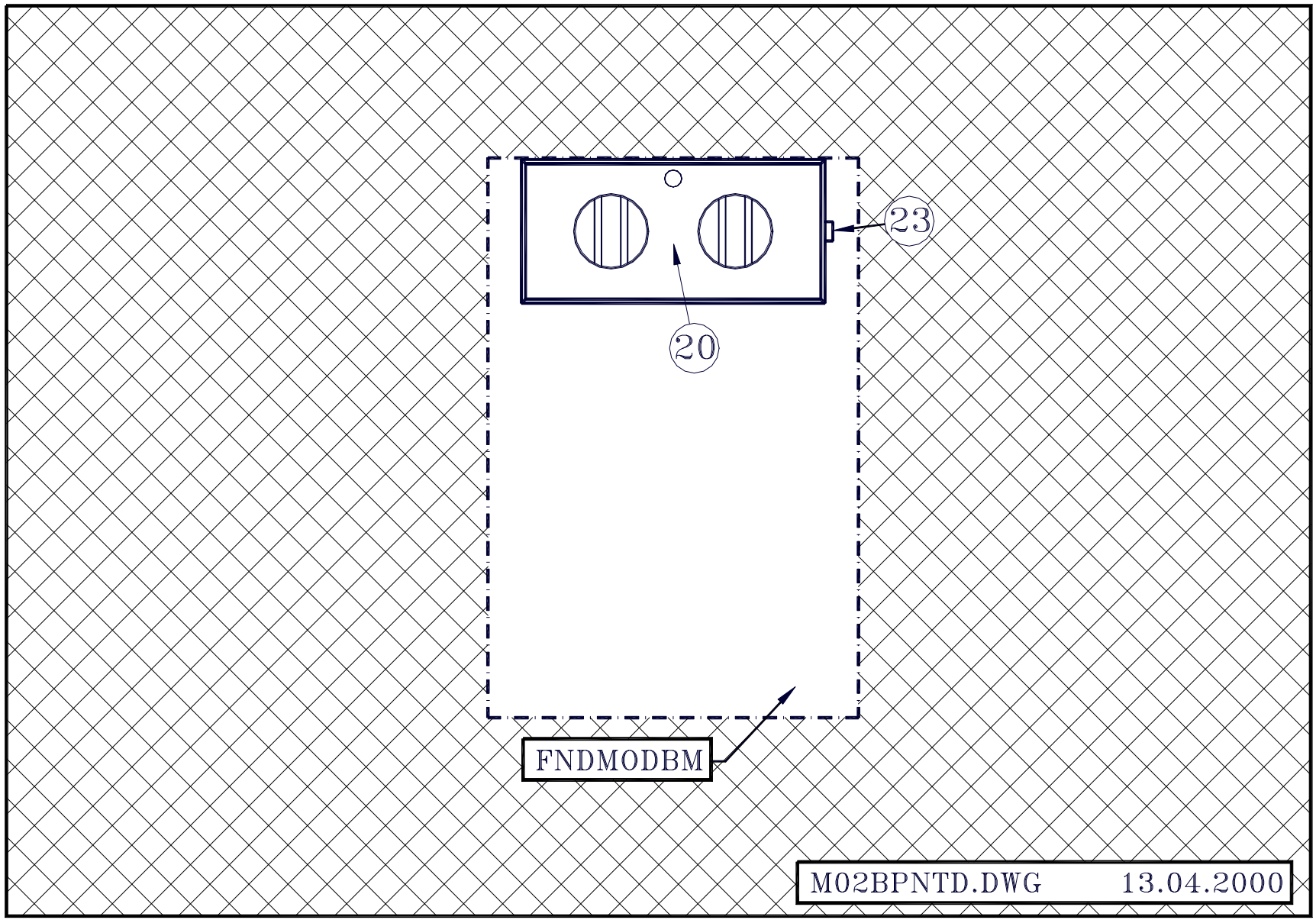
23
20
FNDMODBM
M02BPNTD.DWG 13.04.2000

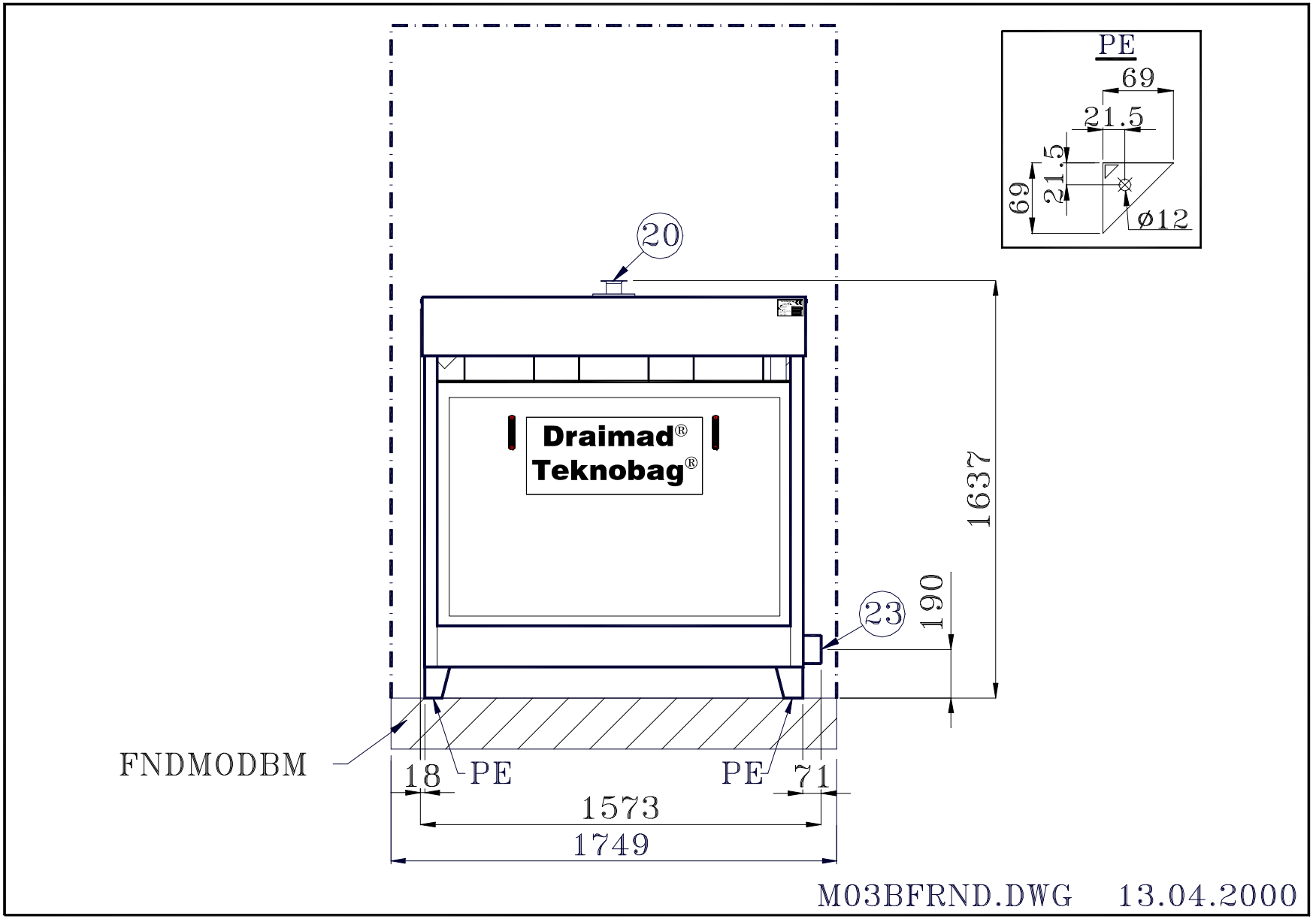
PE
69
21.5
21.5
69
ø12
20
Draimad®
Teknobag®
1637
23
190
FNDMODBM
18
PE
PE
71
1573
1749
M03BFRND.DWG 13.04.2000

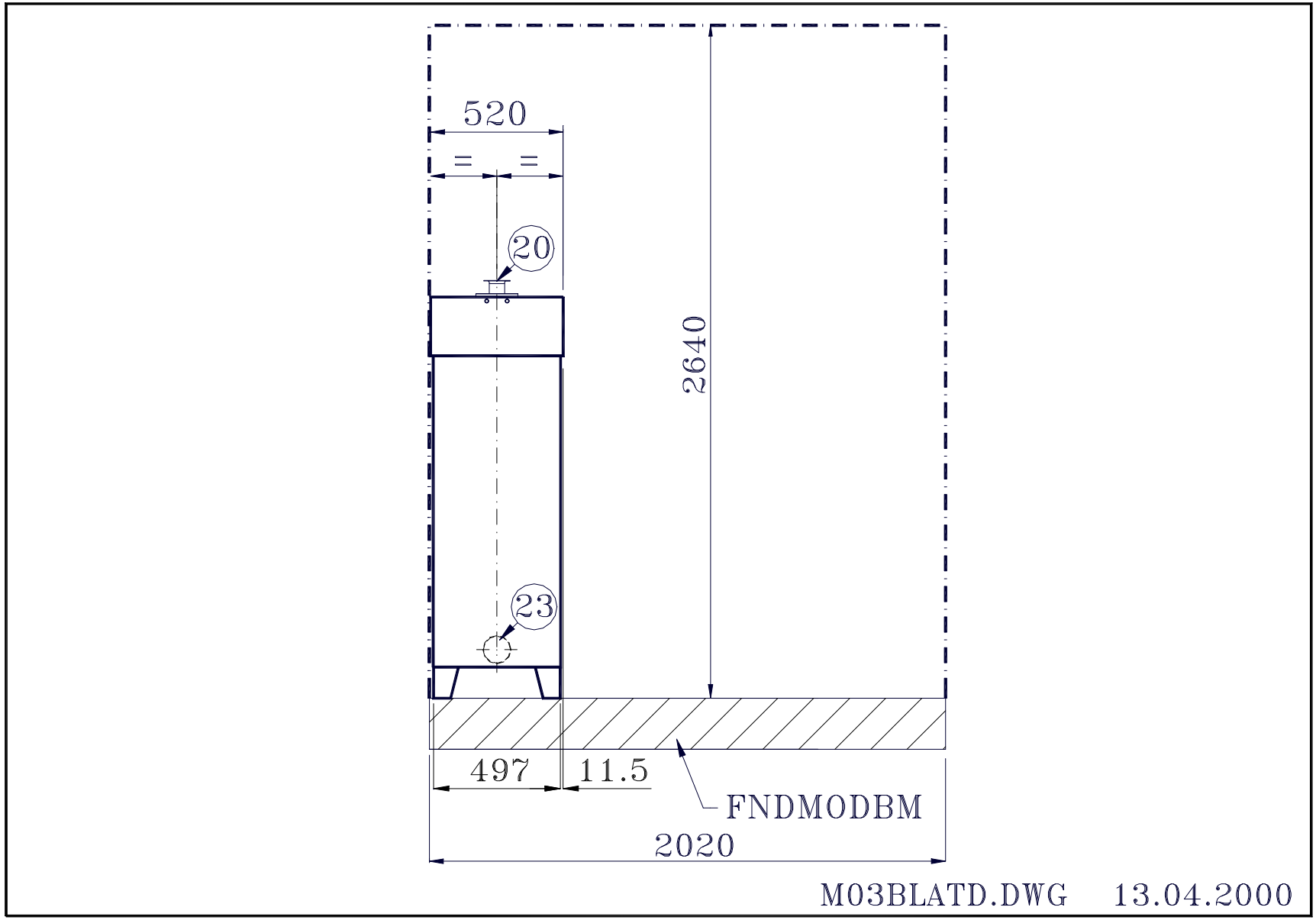
520
20
2640
23
497
11.5
FNDMODBM
2020
M03BLATD.DWG 13.04.2000

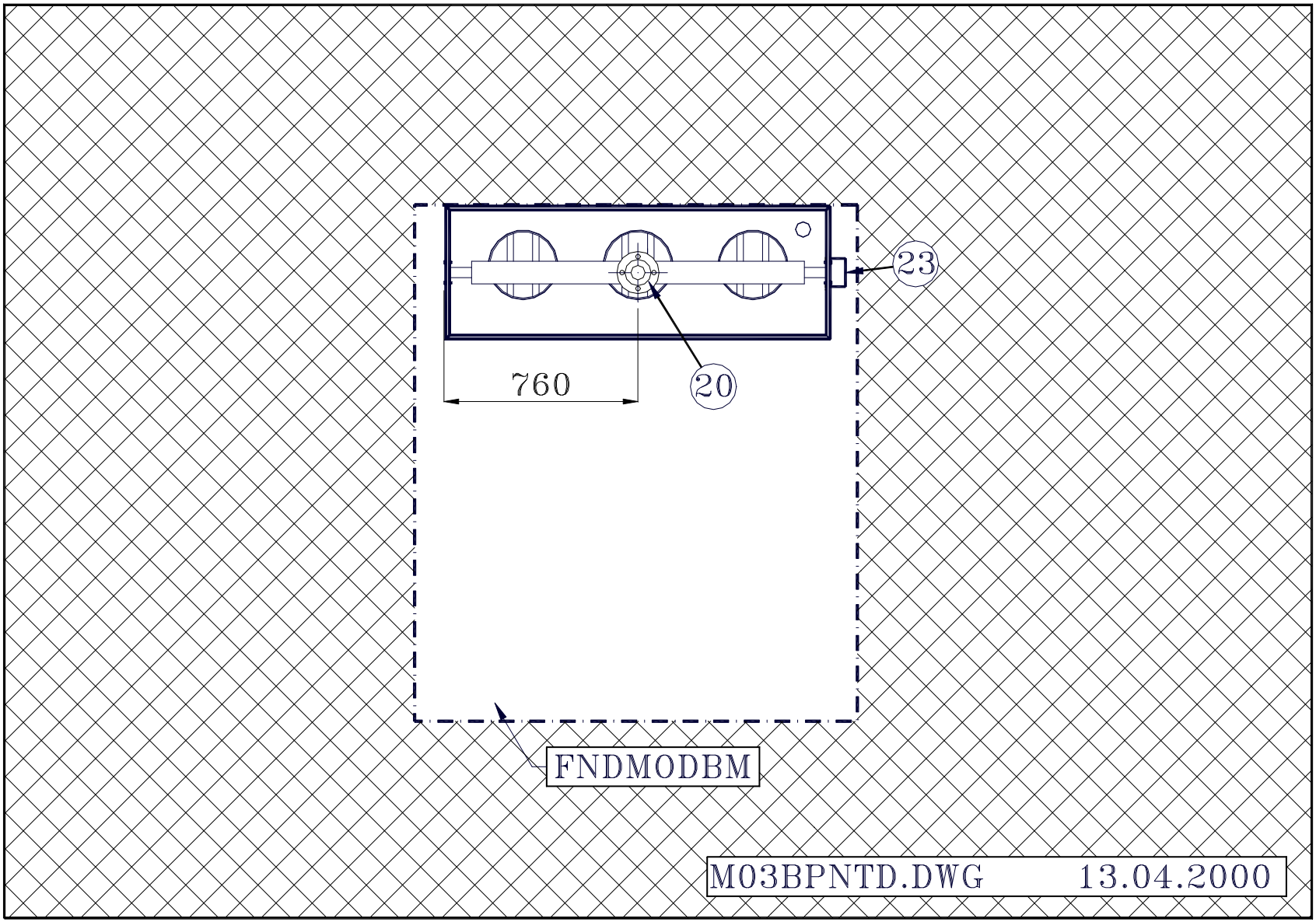
23
760
20
FNDMODBM
M03BPNTD.DWG 13.04.2000

FOUNDATIONS AND DIMENSIONS "06BM"

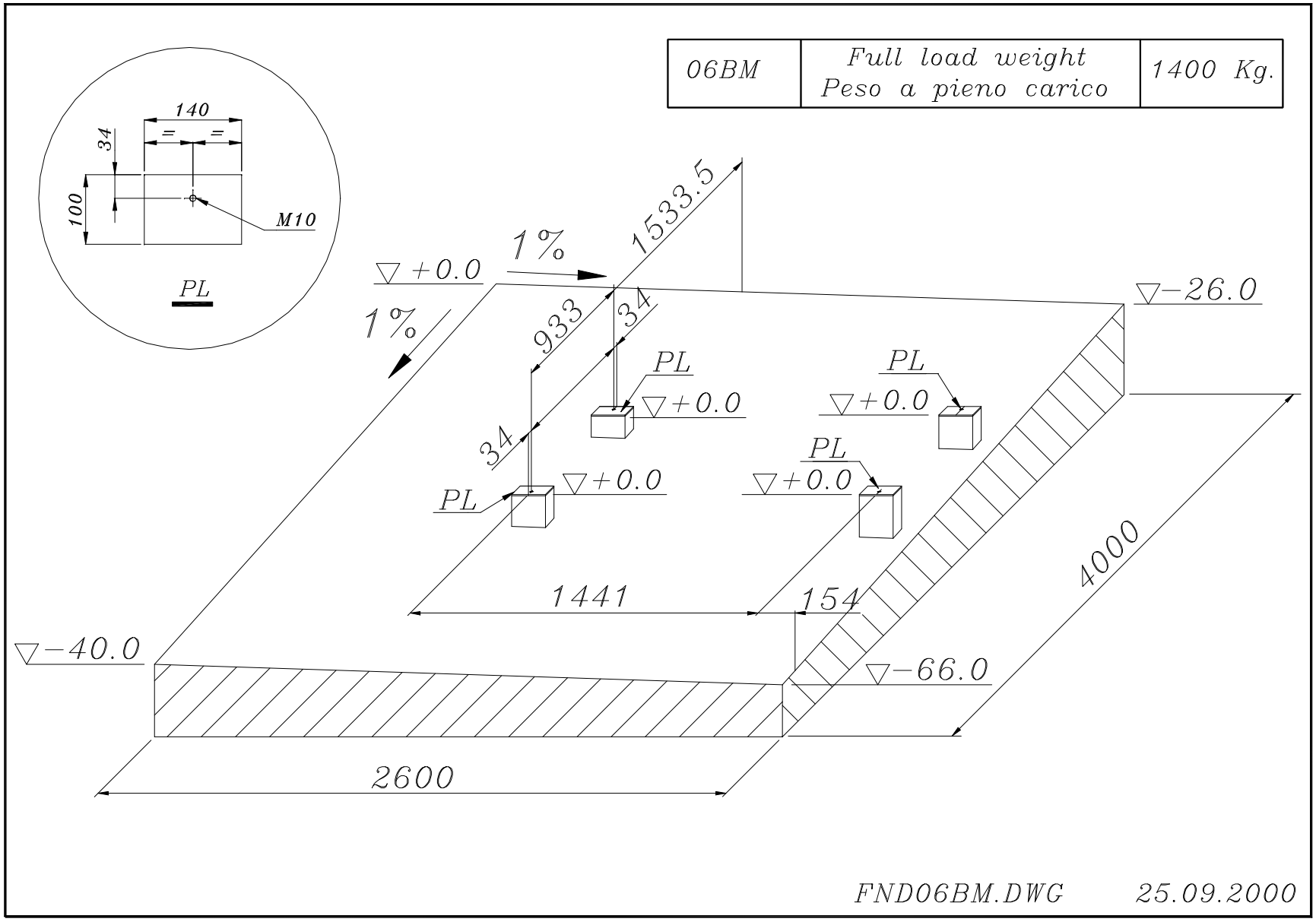

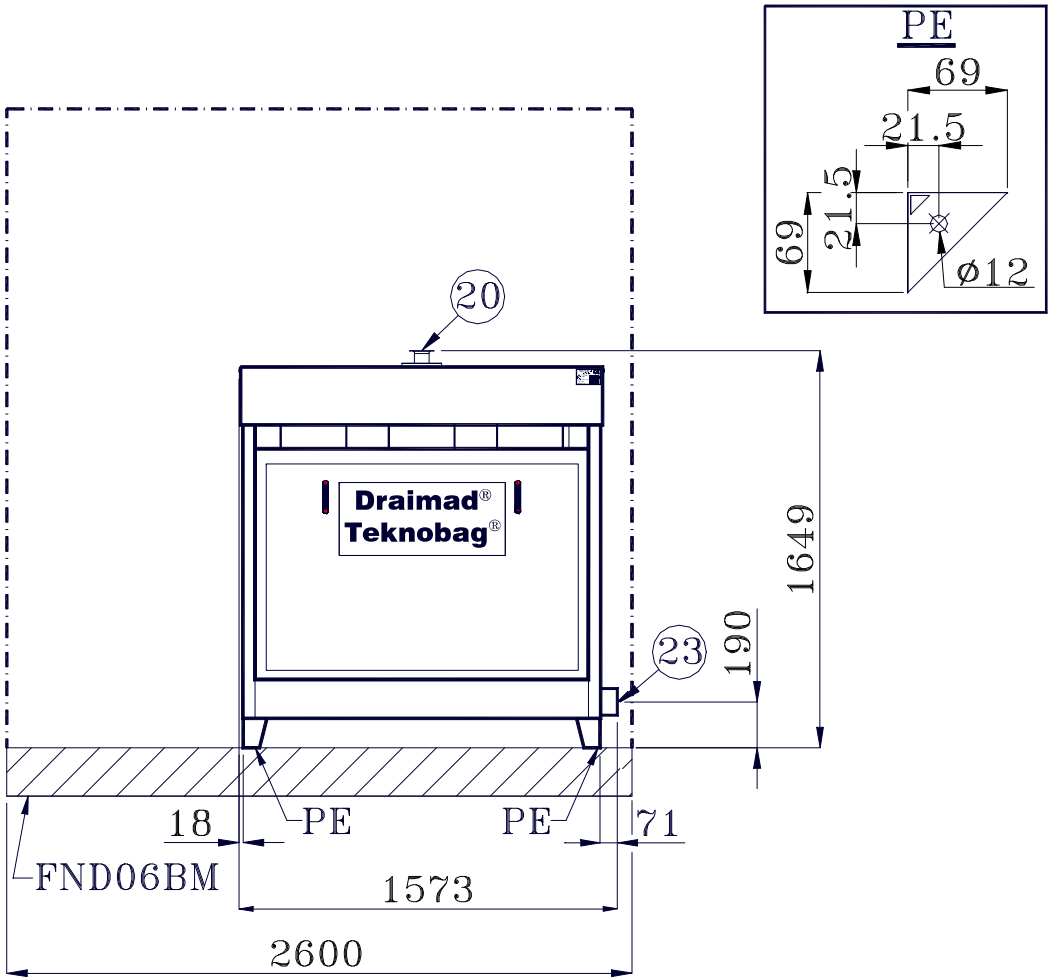

M06BFRND.DWG 13.04.2000

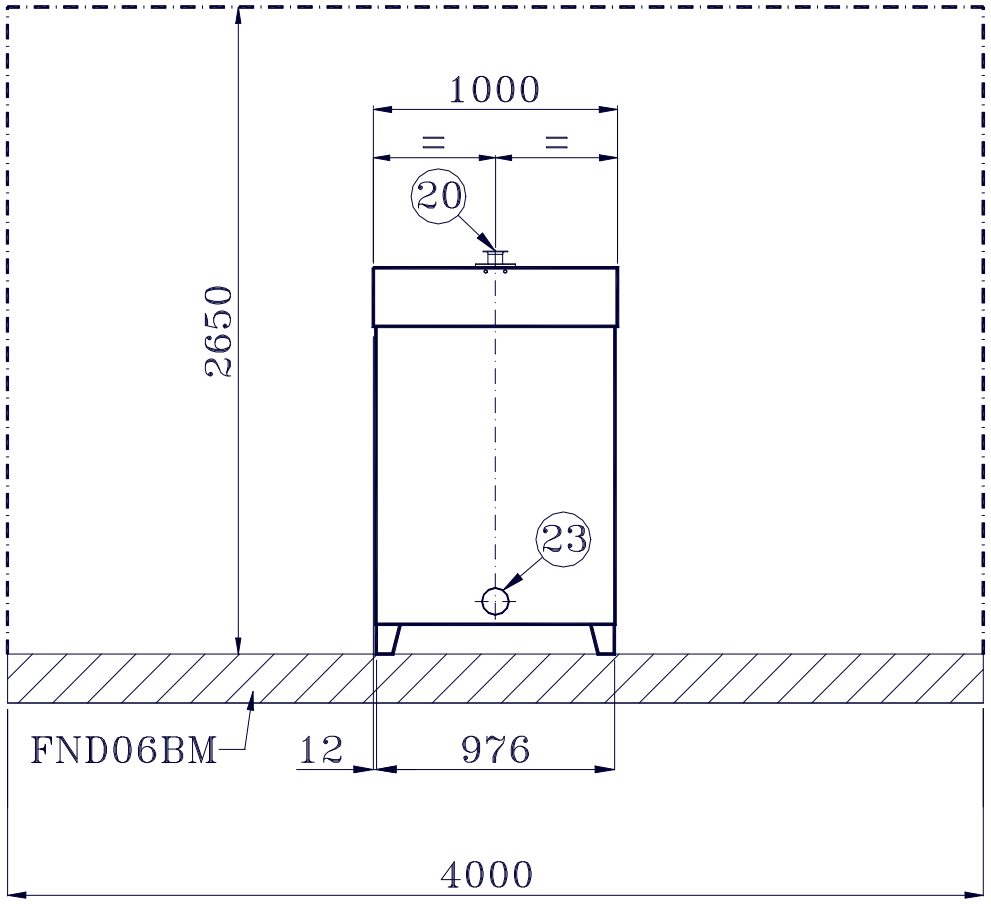

M06BLATD.DWG 13.04.2000

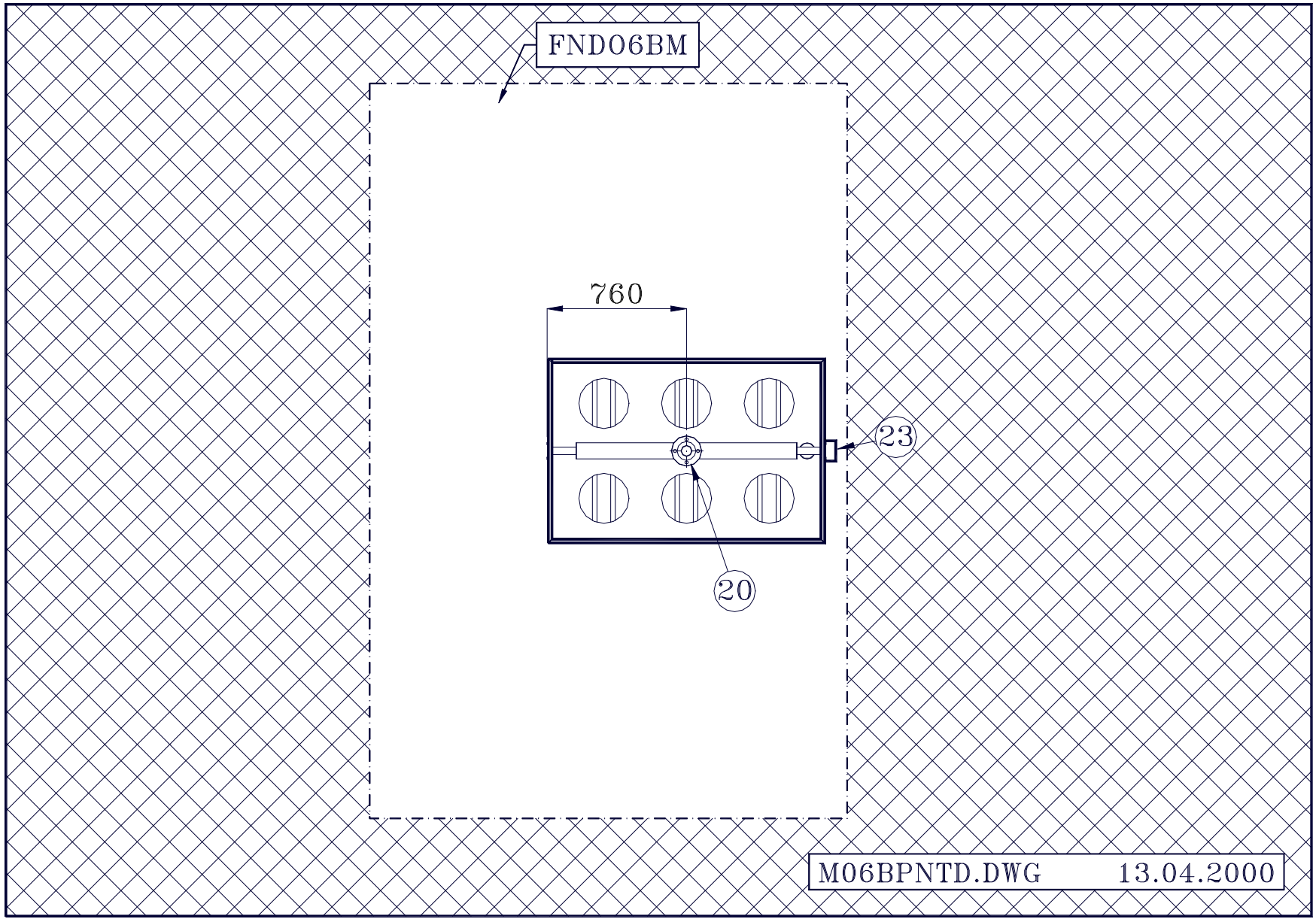
FND06BM
760
23
20
M06BPNTD.DWG 13.04.2000

Section 3.6.5

Polymer Addition



EXCELL SERIES 6000PSA

EMULSION POLYMER FEEDER

EXCELL SERIES 6000PSA
EMULSION POLYMER FEEDER

The EXCELL Series 6000PSA Polymer Feeder uses a peristaltic type polymer metering pump. The peristaltic pump is ideal for low polymer feed applications. The main benefits of the peristaltic type pumps are:

* They are self-priming.
* They can run dry.
* They do not have check valves.
* Capacity can be changed by switching the pump tube.
* Pump capacities range from less than 0.3 GPD, up to 43 GPD.

Polymer Activation Apparatus

The EXCELL activates polymer through a patented, motor-less, high energy, activation apparatus. The apparatus uses the energy available in the water flow to activate all types of liquid polymers. The polymer is activated as it passes through the high turbulence generated by the patented orifice. The pressure required to operate the apparatus is less than 5 psi.

The orifice opening automatically compensates for solution flow changes. This assures that the polymer activation energy level remains adequate for the flow range of the feeder. The activation apparatus components are made of corrosion resistant plastics. The open frame design allows easy access for quick repairs.

Self-Cleaning Sight Tube

The activated polymer solution flows through a patented, self cleaning sight tube, before it exits the feeder. The sight tube allows the operator to see that the feeder is operating properly.

SERIES 6000PSA MODELS

MODEL NUMBER	POLYMER FEED RATE GPD (LPH)	WATER FLOW RATE GPH (LPH)
6005PSA-SX	0.3 to 5 GPD (0.05 to 0.8 LPH)	6 to 60 GPH (25 to 230 LPH)
6005PSA2-SX	0.3 to 5 GPD (0.05 to 0.8 LPH)	6 to 120 GPH (25 to 460 LPH)
6012PSA-SX	0.6 to 12 GPD (0.1 to 1.9 LPH)	6 to 60 GPH (25 to 230 LPH)
6012PSA2-SX	0.6 to 12 GPD (0.1 to 1.9 LPH)	6 to 120 GPH (25 to 460 LPH)
6020PSA2-SX	1 to 20 GPD (0.2 to 3.2 LPH)	15 to 300 GPH (55 to 1140 LPH)
6043PSA2-SX	2 to 43 GPD (0.4 to 6.8 LPH)	15 to 300 GPH (55 to 1140 LPH)

TECHNICAL INFORMATION

* The Model 60XXPSA has a one-gallon (4 liter) blending-aging tank and primary water flow.
* The Model 60XXPSA2 has the blending-aging tank, primary, and post dilution water flow.
* The feeders operate with potable or filtered process dilution water at 30 to 65 psi (2 to 4.4 Bar).
* A solenoid valve is included.
* The pump speed can be controlled locally or by a remote 4-20 mA signal.
* A digital display indicates pump speed.
* An H-O-A Switch allows remote start-stop control.
* A water low-flow switch stops the polymer pump when the water flow is interrupted. A light provides local alarm indication. Alarm contacts allow remote indication.
* The frame is made of welded stainless steel. Frame dimensions are: 16” x 18” x 24” tall. Various frame configurations are available.
* The external injection valve is accessible without disturbing the activation apparatus. All components are modular and easy to access from the front.
* Operating voltage is 120 VAC. Power consumption is less than 3 Amps.

AVAILABLE OPTIONS

* A polymer strainer and a pump calibration cylinder are available.
* Pump cycle timer to allow pump feed rates below 0.3 GPD.
* Timer to allow a flush cycle.
* Pump speed controlled by the dilution water flow to maintain solution concentration.
* Voltages other than 120 VAC are available.
* Custom designed to meet your needs.

EXCELL FEEDERS, INC; Somerset, NJ USA
800-250-9037; 732-828-8655; Fax:732-828-2611
www.excellfeeders.com

EXCELL POLYMER FEEDER

MODEL 60XXPS-SX

OPERATING INSTRUCTIONS

INDEX

1.0 INTRODUCTION . . . . . Page 1

2.0 UNPACKING . . . . . Page 1

3.0 PRE-INSTALLATION INSTRUCTIONS . . . . . Page 1

4.0 INSTALLATION . . . . . Page 1

5.0 START-UP . . . . . Page 3

6.0 CLEANING . . . . . Page 4

7.0 SHUT-DOWN FOR OVER 48 HOURS . . . . . Page 4

8.0 MAINTENANCE . . . . . Page 4

9.0 REPAIRS . . . . . Page 5

10.0 TROUBLESHOOTING . . . . . Page 5

DRAWINGS

COMPONENTS DESCRIPTION

EXCELL FEEDERS, INC., P.O. Box 7475, Somerset, NJ 08875
732-828-8655 800-250-9037 Fax: 732-828-2611
www.excellfeeders.com

EXCELL POLYMER FEEDER OPERATING INSTRUCTIONS

1.0 **INTRODUCTION:** This manual addresses the installation, operation, maintenance, and troubleshooting for EXCELL polymer feeder, Model 60XXPS-SX. Please review the manual carefully. Pay special attention to warnings and precautions. Always follow good safety procedures, including the use of proper eye, face, and clothing protection.

2.0 **UNPACKING:** Your carton will contain the items listed on the packing slip.
Notify the carrier immediately if there are any signs of damage to the feeder or its parts.
Notify EXCELL if any of the parts are missing.

3.0 **PRE-INSTALLATION INSTRUCTIONS:**

3.1 **PROTECTIVE CLOTHING:** Refer to the MSDS precautions from the supplier of the polymer to be mixed in the feeder. Always wear the recommended apparel.

3.2 **SOLUTION COMPATIBILITY:** The feeder can mix a variety of solutions. Check that the feeder is compatible with the solutions you are intending to mix.

3.3 **PLUMBING:** Always adhere to your local plumbing codes and requirements. Be sure that installation does not constitute a cross connection. Check local plumbing codes for guidelines. If using potable water, a backflow preventer is required.

3.4 **ELECTRICAL:** All wiring must conform to local electrical codes. The feeder should be plugged into a grounded outlet protected by a Ground Fault Interrupter.

4.0 **INSTALLATION:**

4.1 **LOCATION:** This EXCELL FEEDER is suitable for indoor dry locations. The area is to be free of flammable vapors or dust. Ambient temperature is to be between 40 F and 120 F. (5 C and 50 C). Protect from freezing temperatures.

If the EXCELL FEEDER is to be used in areas exposed to flammable vapors or dusts, the Explosion Proof Option is required.

4.2 **ELECTRICAL CONNECTION**: The EXCELL FEEDER comes standard with a 7' long power cord with a 3-prong grounded plug. It should be plugged into a grounded outlet protected by a ground fault interrupter.

4.3 **WATER SUPPLY CONNECTION:** Provide a clean or filtered water supply to within 3' of the feeder. Water pressure should be at least 30 psi and must not exceed 100 psi or 100 F (38 C). Water pressure should be at least 25 psi higher than where the solution is being injected. Provide a shutoff valve.

4.4 CONTROLS:

1. **REMOTE START-STOP**: Connect wiring from the remote Start/Stop switch to the terminals in the junction box per the attached wiring diagram. The remote switch is to be a dry contact with no voltage. The feeder will provide the 120 VAC to power the circuit.

2. **REMOTE 4-20 mA PUMP SPEED CONTROL**: Connect wiring from a remote 4-20 mA signal source to the terminals in the junction box per the attached wiring diagram. A digital indicator provides local indication of pump speed, 0 to 100%.

3. **REMOTE ALARM:** A set of dry contacts allow remote indication when the water flow is below minimum. Connect wiring from the terminals in the junction box to the remote alarm per the attached wiring diagram. A light provides local alarm indication. The contacts are limited to 240 VAC, 5 Amps.

4.5 ACTIVATED SOLUTION CONNECTION:

1. Connect the feeder to the activated solution piping. Tighten all connections.
2. Use only pipe or tubing that is designed to withstand up to 100 psi pressure. Do not use clear unreinforced vinyl tubing.

4.6 POLYMER CONNECTION:

1. Install the pump tube on the metering pump. See pump manual for details.
   Note: If the feeder is not to be used for a long period of time, the tube should be removed to extend tube life.

2. The polymer can be supplied to the metering pump through a flooded suction or suction lift.

   a. Suction lift is to be less than 4'. Install the strainer supplied with the feeder at the end of the inlet tube. Insert the tube in the container.

   b. Flooded suction. For proper pump operation, to prevent over pumping and siphoning, the polymer level is to be less than 5' above the feeder. Connect the polymer supply to the inlet of the in-line strainer before the pump suction.

5.0 START-UP:

1. Turn on the water to the EXCELL FEEDER.

2. Turn the feeder selector switch to the "ON" position. This switch will open the water solenoid and turn on the metering pump. There must be adequate water flow to the feeder to trip the flow switch before the metering pump will turn on.

3. Re-adjust the low water flow switch setting, if necessary. The switch has been preset for the water flowmeter minimum indication.

   Slowly close the valve on the dilution water flow meter until the flow is slightly higher than the lowest line on the flowmeter. Turn the adjusting screw on the low water flow-switch until it turns on the metering pump. Loosen the screw to reduce the trip point flow.
   Turn off the water flow. The flow-switch should turn the pump off.

   Adjust the flow to the desired rates.

4. Adjust the metering pump to the desired flow rate. See the pump manual.

5. The pump has been set as follows:

   a. Local. The pump speed is manually adjustable from 0 to 100% of capacity.

   b. Remote. The pump speed is adjustable from 0 to 100% of capacity by a 4-20 mA signal.

   The minimum pump speed is set at 0 % when the pump receives a 4mA signal.

   The maximum pump speed is set at 100 % when the pump receives a 20mA signal.

   The minimum and maximum pump speeds can be reset as desired.
   See the DC motor controller manual.

5.1 CALIBRATE THE METERING PUMP:

1. The metering pump can be calibrated only if the pump is supplied by flooded suction.
2. Fill the calibration cylinder with polymer.
3. Close the polymer supply valve and immediately open the calibration cylinder valve.
4. Measure the time needed to pump out a desired amount of polymer.

   The pump flow in Gallons Per Day equals:

   $$\frac{22.8 \times (\#\text{ of ml})}{(\#\text{ of seconds})} = \#\text{ of GPD}$$

   EXAMPLE: $22.8 \frac{(20\text{ ml})}{90\text{ sec}} = 5.1\text{ GPD}$

6.0 CLEANING:

6.1 CLEANING THE SIGHT GLASS:

1. Turn the metering pump off.
2. Flow water through the feeder for about two minutes to flush it of polymer.
3. Turn the feeder main switch to "OFF."
4. Turn the water supply valve off. Don't use the flow meter valve to turn off water flow.
5. Drain the sight glass using the drain valve.
6. Remove the sight tube by removing the four nuts; save the nuts and O-Rings.
7. Rinse the sight tube cleaning assembly. Wipe the sight tube with a clean cloth.
8. Reinstall the top cap O-Ring and cap. Tighten the nuts. Check for leaks

6.2 CLEANING THE WATER FLOWMETER:

1. Turn the Feeder main switch to "OFF."
2. Close the water supply valve.
3. Open the drain valve to relieve system pressure. Close the valve.
4. Unscrew the plug on top of the flow meter.
5. Clean the flow tube with a soft brush and mild soap and water.
6. Apply petroleum jelly to the plug O-ring and reinstall. Don't over-tighten.

7.0 SHUT-DOWN FOR OVER 48 HOURS:

1. Fill the calibration column with oil that is compatible with the process. Pump the oil until all the polymer is displaced out of the system.
2. Turn the water supply valve off
3. Turn the feeder switch "OFF".
4. If needed, drain the feeder using the drain valve. Note that some feeder components will not fully drain and will be damaged if exposed to freezing temperatures.

8.0 MAINTENANCE: The EXCELL FEEDER was designed to require minimum maintenance, with all components easy to replace. The estimated life of the pump tube will range from two to six months, depending on operating parameters.

9.0 REPAIRS: Contact EXCELL at (732) 828-8655 for assistance or replacement parts.

9.1 METERING PUMP REPAIRS: See the attached manufacturer's manual.

9.2 RECOMMENDED SPARE PARTS:

1. Metering Pump Tube
2. Injection Valve
3. Blending Tank O-Ring Set
4. Relay
5. Solenoid Valve

10.0 TROUBLESHOOTING:

A. SYMPTOM: METERING PUMP WILL NOT RUN.

1. LIKELY CAUSE: Not enough water flow to satisfy the flow switch.
   SOLUTION: Increase water flow, until the flow switch closes, or adjust the flow switch setting.

2. LIKELY CAUSE: Not plugged in or no power at outlet.
   SOLUTION: Plug the feeder in; test the outlet for power.

3. LIKELY CAUSE: Pump is in “Remote” and not receiving a remote signal.
   SOLUTION: Set the switch to the proper setting.

B. SYMPTOM: METERING PUMP DOES NOT PUMP TO CAPACITY.

1. LIKELY CAUSE: Damaged tube.
   SOLUTION: Clean and replace parts as needed.

2. LIKELY CAUSE: Feeder injection valve is plugged.
   SOLUTION: Disconnect the polymer feed to the valve. Clean or replace the valve.

3. LIKELY CAUSE: Polymer viscosity is too high.

C. SYMPTOM: FEEDER INJECTION VALVE IS LEAKING.

1. LIKELY CAUSE: Debris in the valve.
   SOLUTION: Disconnect the polymer feed to the valve. Clean or replace the valve.

D. SYMPTOM: SIGHT TUBE WIPER IS NOT SPINNING.

1. LIKELY CAUSE: Not enough solution flow to operate the wiper.
   SOLUTION: Temporarily increase water flow until the wiper begins spinning.

ITEM	DESCRIPTION
A	POLYMER ACTIVATING APPARATUS
B	SIGHT GLASS
C	METERING PUMP
D	WATER FLOWMETER
E	POLYMER INJECTION VALVE
F	SOLUTION DISCHARGE–1/2"NPT
H	WATER INLET – 1/2"NPT
J	STRAINER
K	WATER SOLENOID
L	WATER FLOW SWITCH
M	POLYMER INLET – 1/4" HOSE

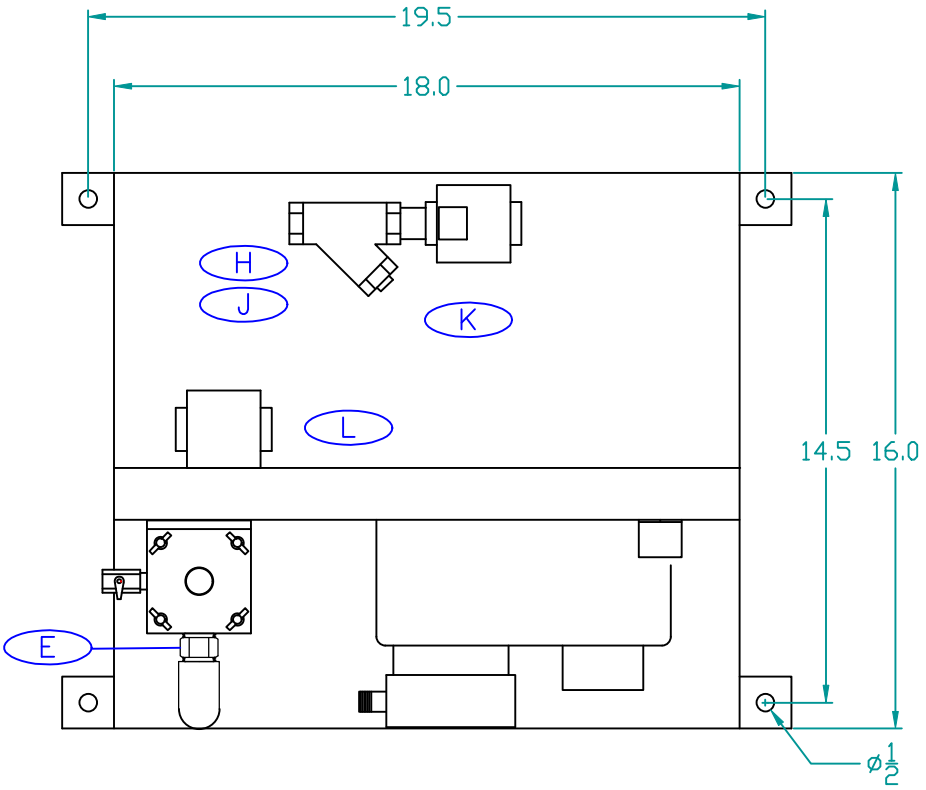

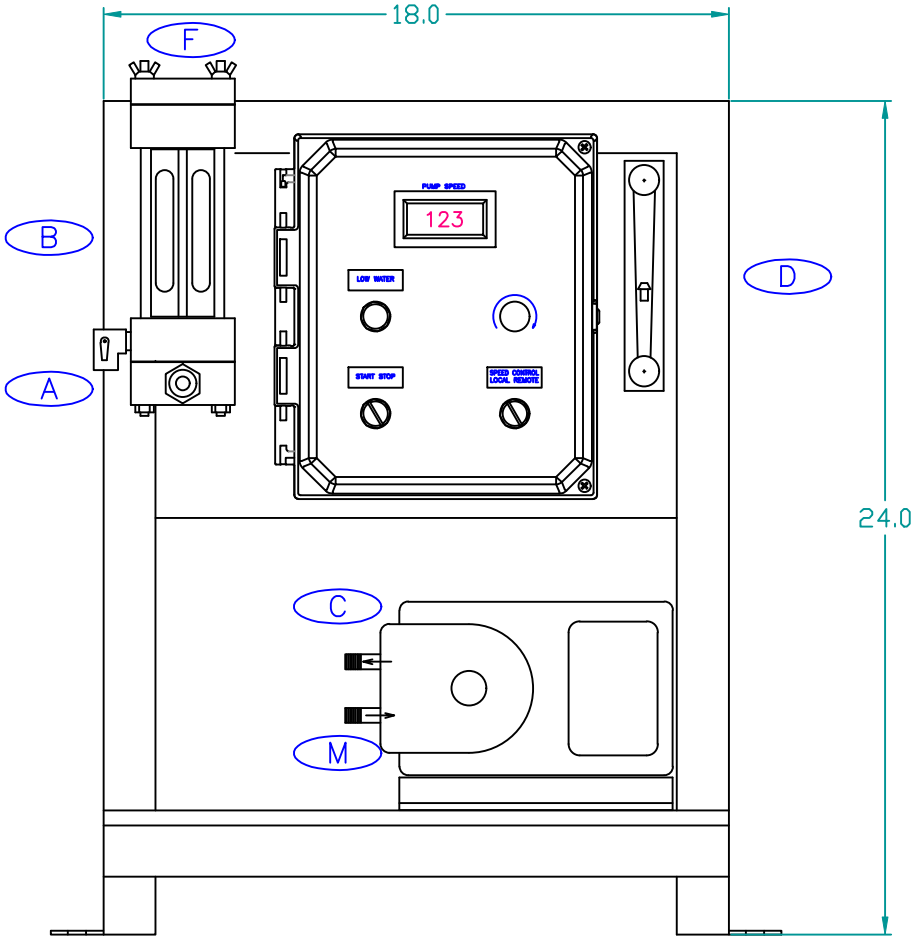

THIS DRAWING CONTAINS PROPRIETARY INFORMATION WHICH IS INTENDED FOR USE BY ONLY THOSE PARTIES LISTED AND MAY NOT BE MODIFIED, REPRODUCED, OR RETRANSMITTED WITHOUT THE CONSENT OF EXCELL FEEDERS.

excellfeeders

INDEX	DESCRIPTION	NAME	DATE
	REVISIONS		

CUSTOMER:

60XXPS–S
GENERAL LAYOUT

TOLERANCE:	DRAWN BY:	DRAWN DATE:
N/A	A.P.M	02/11/2013
SCALE:	RLS. BY:	RLS. DATE:
NONE	A.M.M	01/22/2019

DWG NO.: 6PS–300–S–2

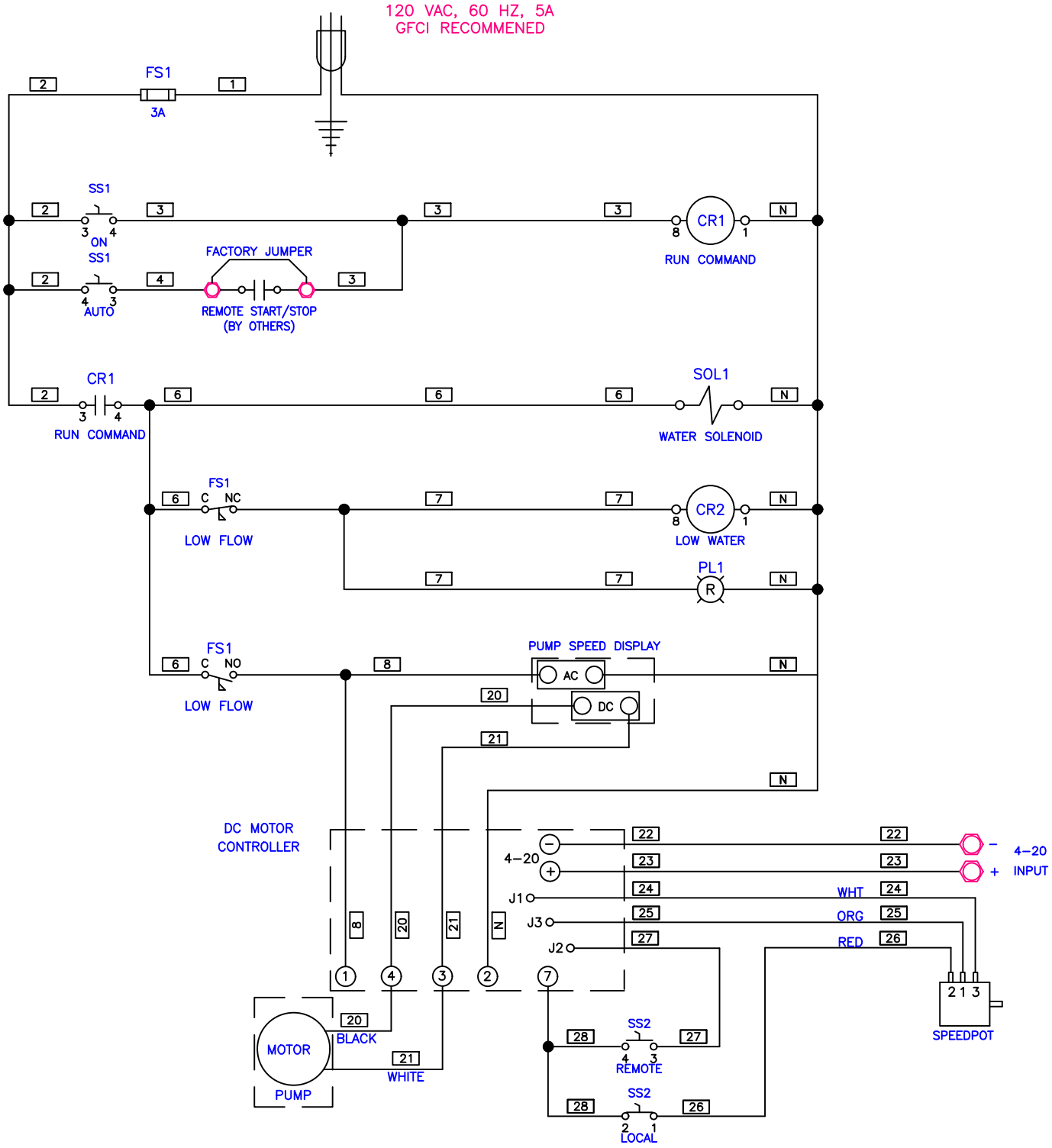

ELECTRICAL COMPONENTS

DESCRIPTION	PART NUMBER
ENCLOSURE, AMP, 10x8	EQX-AMP-1084H
DISPLAY, ALTECH	ADI-70313770
FUSE, AGC, 3A	ADI-AGC03
SWITCH, 3 WAY	ADI-GCX3320-22
SWITCH, 2 WAY	ADI-GCX3300
PILOT LIGHT, RED LED	ADI-ECX2051-127L
RELAY, DPDT, 120 VAC	ALD-70178595
RELAY BASE, DPDT	ALD-70179007
CONTROLLER, 1/8 HP	ADI-GSD4-240-1C
4–20 CIRCUIT	ADI-GSD4-AI-A
POTENTIOMETER	ALD-754-2057

ATTACH NAMEPLATE TO INSIDE OF CONTROL PANEL

Voltage: 120VAC 1PH 60HZ
Total FLA: 1.3A
Largest Motor FLA: 1.1A
Diagram No: 6BPS-400-S-0
SCCR: 10kA
Enclosure Rating: UL NEMA 4X

THIS DRAWING CONTAINS PROPRIETARY INFORMATION WHICH IS INTENDED FOR USE BY ONLY THOSE PARTIES LISTED AND MAY NOT BE MODIFIED, REPRODUCED, OR RETRANSMITTED WITHOUT THE CONSENT OF EXCELL FEEDERS.

excellfeeders

INDEX	DESCRIPTION	NAME	DATE
	REVISIONS		

CUSTOMER:

TITLE: 6BPS-S Wiring Diagram

TOLERANCE:	DRAWN BY:	DRAWN DATE:
N/A	A.M.M	02/20/2013
SCALE:	RLS. BY:	RLS. DATE:
NONE	A.P.M	07/26/2018

DWG NO.: 6BPS-400-S-0

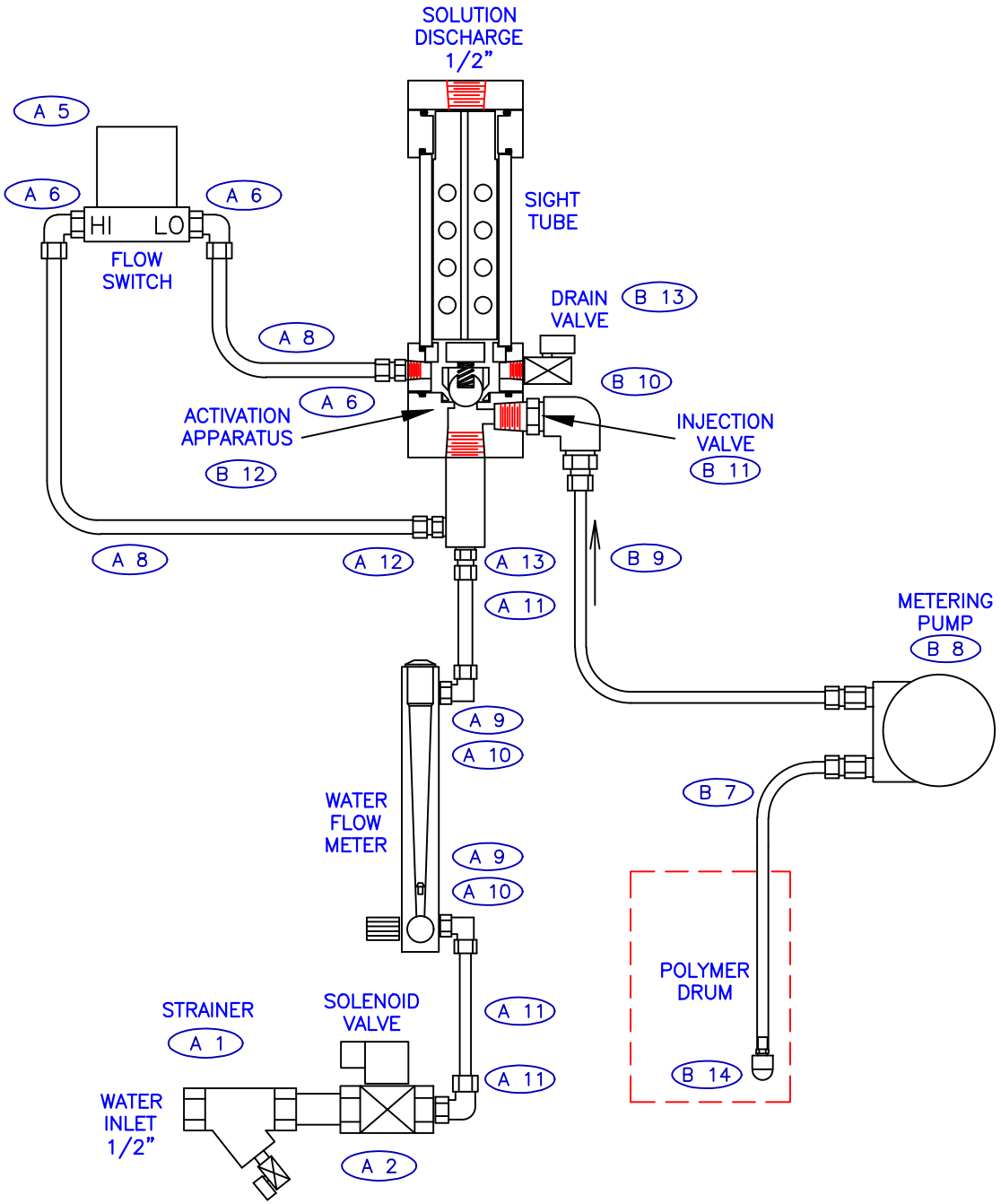

ITEM DESCRIPTION

A1 STRAINER, 1/2", 60 MESH
EXL-0077-BR-050-060

A2 SOLENOID VALVE, BR, 120 VAC COIL
EXL-0075-BR-050-120

A4 FLOW METER, 300 GPH, PANEL
EXL-0018-BR-300

A5 WATER FLOW SWITCH, DP, 2-10 PSI, BRASS
DXW-11153-1

A6 FITTING, ELBOW, PP, 1/4 MPT x 1/4 TUBE
0063-PP-025M-025T

A8 TUBE, PE, 1/4" OD
0067-PE-025

A9 FITTING, STRAIGHT, 1/4 MPT X 1/4 FPT
EXL-0371-BR-025M-025F

A10 FITTING, ELBOW, BR, 1/4MPT X 1/2 TUBE
EXL-0081-BR-025M-050T

A11 TUBE, PE, 1/2" OD
0067-PE-050

A12 FITTING, STRAIGHT, PP, 1/4 MPT x 1/4 TUBE
0065-PP-025M-025T

A13 FITTING, ELBOW, PP, 1/2 MPT x 1/2 TUBE
0063-PP-050M-050T

B7 HOSE, 1/4" ID
0090-NR-025

B8 METERING PUMP, PERISTALTIC
0529-X-XX

B9 TUBE, PE, 3/8" OD
0067-PE-037

B10 FITTING, STRAIGHT, PP, 1/2 MPT x 3/8 TUBE
0065-PP-050M-037T

B11 INJECTION VALVE, 1/2"
0027-H

B12 ACTIVATION APPARATUS
6-650-300-A

B13 VALVE, BALL, PVC, 1/4"
0120-BL-PVC-025

B14 STRAINER, PVC, ¾"
0526-B

THIS DRAWING CONTAINS PROPRIETARY INFORMATION WHICH IS INTENDED FOR USE BY ONLY THOSE PARTIES LISTED AND MAY NOT BE MODIFIED, REPRODUCED, OR RETRANSMITTED WITHOUT THE CONSENT OF EXCELL FEEDERS.

excellfeeders

INDEX	DESCRIPTION	NAME	DATE
	REVISIONS		

NOTES:

CUSTOMER:

TITLE: 6PS, 300 GPH FLOW DIAGRAM

TOLERANCE:	DRAWN BY:	DRAWN DATE:
N/A	A.P.M	02/11/2013
SCALE:	RLS. BY:	RLS. DATE:
NONE	A.M.M	04/12/2019

DWG: 6PS-500-300-2

ITEM	DESCRIPTION
6001-G-A-4	BOTTOM SIGHT GLASS PLATE
6002-J-E-2	SOLUTION INLET PLATE
6003-A-1	FLOW DIVERTER PLATE, 300 GPH
6004-B-2	TOP SIGHT GLASS PLATE
6005-A-2	SOLUTION DISCHARGE PLATE
6006-A-0	SIGHT GLASS
6020-A-2	SIGHT GLASS WIPER
0009-A	SIGHT GLASS O-RING
0010-A	TOP COVER O-RING
0188-A	ACTIVATION BALL, 1/2"
0189-A	ACTIVATION SPRING

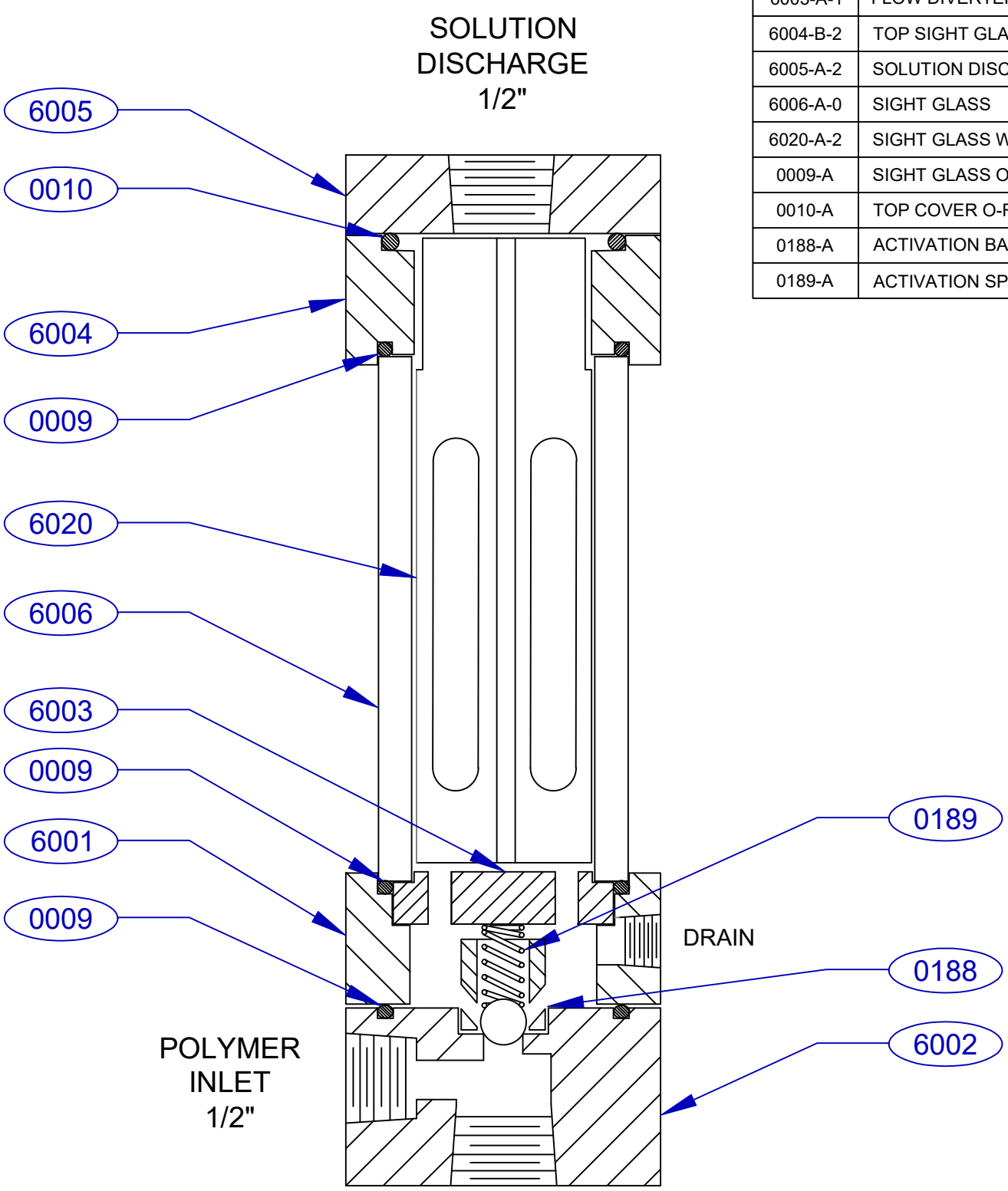

THIS DRAWING CONTAINS PROPRIETARY INFORMATION WHICH IS INTENDED FOR USE BY ONLY THOSE PARTIES LISTED AND MAY NOT BE MODIFIED, REPRODUCED, OR RETRANSMITTED WITHOUT THE CONSENT OF EXCELL FEEDERS.

excellfeeders

INDEX	DESCRIPTION	NAME	DATE
	REVISIONS		

CUSTOMER:

TITLE: 5 GPM Activation Apparatus

TOLERANCE:	DRAWN BY:	DRAWN DATE:
N/A	A.M.M.	07/10/2014
SCALE:	RLS. BY:	RLS. DATE:
NONE	A.M.M.	11/21/2018
DWG NO.:	6-650-X-A-4	



MODEL 0529-X

Peristaltic Injector Pump

excellfeeders

PO Box 7475
Somerset, NJ 08875
USA
Phone: 732-828-8655 **FAX**: 732-828-2611
E-mail: support@excellfeeders.com
Website: www.excellfeeders.com

0529-X

Specifications

Maximum Working Pressure	65 psig / 4.5 bar (most models)
Maximum Fluid Temperature	130° F / 54°C
Ambient Temperature Range	14 to 110° F / -10 to 43° C
Duty Cycle	Continuous
Maximum Solids	50% by volume
Maximum Viscosity	5,000 Centipoise
Maximum Suction Lift	up to 30 ft. water
Power Requirements	90VDC 60 Watts,
Dimensions	6-1/8" H x 10-1/8" W x 9" D
Weight	8 lb.

Features

- Peristaltic Pump Tube does not require valves.
- Self priming under maximum pressure. Cannot vapor lock.
- High outlet pressure capability of 65 psig (most models).
- High inlet suction lift capability of 30 feet.
- Patented pump tube assembly design.
- Corrosion proof Valox housing.
- Tamper resistant electronic control panel cover.

Pump Capacity:

Model	#1 tube	#2 tube	#3 tube
0529-0-X:	5.7 GPD	12 GPD	28 GPD
0529-1-X	13 GPD	28 GPD	66 GPD
0529-2-X	20 GPD	43 GPD	99 GPD
0529-3-X	25 GPD	53 GPD	---------



MODEL 0529-X

Peristaltic Injector Pump
Operating Manual

excellfeeders

PO Box 7475
Somerset, NJ 08875
USA
Phone: 732-828-8655 **FAX**: 732-828-2611
E-mail: support@excellfeeders.com
Website: www.excellfeeders.com

TABLE OF CONTENTS

1.....**Introduction**.....**2**
2.....**Specifications**.....**3**
3.....**Features**.....**3**
4.....**Unpacking**.....**3**
5.....**Installation**.....**4**
5.1..Mounting location.....**4**
5.2..Input power connections.....**5**
5.3..How to install the tubing and fittings.....**6**
6.....**How to maintain the Pump**.....7
6.1..Routine inspection and cleaning.....7
6.2..How to clean and lubricate the Pump.....7
6.3..How to replace the pump tube.....8
Replacement parts drawing.....9
Replacement parts list.....10
Warranty information.....11

1.0 Introduction

Congratulations on purchasing the 0529-X Peristaltic Metering Pump. The 0529-X is designed to inject chemicals into piping systems. The 0529-X can be equipped with control circuitry which allows the pump output to be externally controlled by a 4-20 mA signal.

2.0 Specifications

Maximum Working Pressure	65 psig / 4.5 bar (most models)
Maximum Fluid Temperature	130° F / 54°C
Ambient Temperature Range	14 to 110° F / -10 to 43° C
Duty Cycle	Continuous
Maximum Solids	50% by volume
Maximum Viscosity	5,000 Centipoise
Maximum Suction Lift	up to 30 ft. water
Power Requirements	90VDC 60 Watts,
Dimensions	6-1/8" H x 10-1/8" W x 9" D
Weight	8 lb.

3.0 Features

- Peristaltic Pump Tube does not require valves.
- Self priming under maximum pressure. Cannot vapor lock.
- High outlet pressure capability of 65 psig (most models).
- High inlet suction lift capability of 30 feet.
- Patented pump tube assembly design.
- Corrosion proof Valox housing.
- Tamper resistant electronic control panel cover.

4.0 Unpacking

Your pump package should contain the following:
1 - Injector pump with 1 pump tube assembly
1 - suction tube strainer
1 - ceramic tubing weight
1 - 5' Length of clear PVC suction tubing

5.0 Installation

CAUTION: Proper eye and skin protection must be worn when installing and servicing the pump.

Note: *All diagrams are strictly for guideline purposes only. Always consult an expert before installing the pump into specialized systems. The pump should be* ***serviced by qualified persons only.***

5.1 Mounting Location

Choose an area located near the chemical supply tank, chemical injection point and electrical supply. Although the pump is designed to withstand outdoor conditions, a cool, dry, well ventilated location is recommended. Install the pump where it can be easily serviced.

- Mount the pump to a secure surface or wall using the enclosed hardware. Wall mount to a solid surface only. Mounting to drywall with anchors is not recommended.
- Mount the pump close to the injection point. Keep the outlet (discharge) tubing as short as possible. Longer tubing increases the back pressure at the pump tube.
- Your solution tank should be sturdy. Keep the tank covered to reduce fumes. Do not mount the pump directly over your tank. Chemical fumes may damage the unit. Mount the pump off to the side or at a lower level than the chemical container.
- Mounting the pump lower than the chemical container will gravity feed the chemical into the pump. This "flooded suction" installation will reduce output error due to increased suction lift. You must install a shut-off valve, pinch clamp or other means to halt the gravity feed to the pump during servicing.
- Be sure your installation does not constitute a cross connection with the drinking water supply. Check your local plumbing codes.

INJECTOR MOUNTING

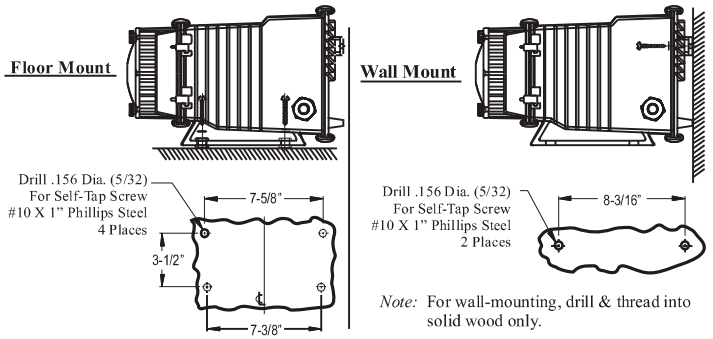

Note: For wall-mounting, drill & thread into solid wood only.

TYPICAL INSTALLATION

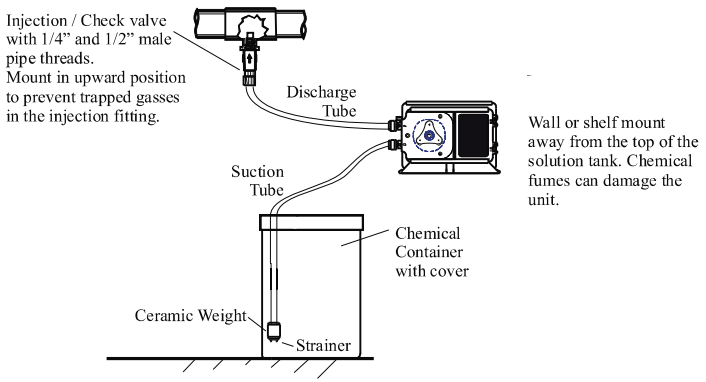

PARTS LOCATOR DRAWING

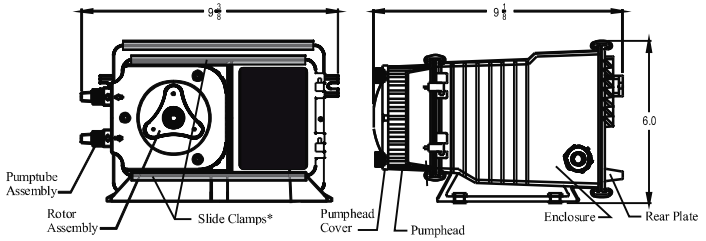

5.2 Input Power Connections

WARNING: Risk of electric shock.

- Be certain to connect the pump to the proper supply voltage. Using the incorrect voltage will damage the pump and may result in injury. The voltage requirement is printed on the pump serial label.

5.4 How To Install the Tubing and Fittings

CAUTION: Proper eye and skin protection must be worn when installing and servicing the pump.

- **Inlet Tubing -** Locate the inlet fitting of the Pump Tube. Remove the tube nut. Push the clear PVC suction tubing onto the compression barb of the fitting. Use the tube nut to secure the tube. Hand tighten only.
- **Strainer** - Trim the inlet end of the suction tubing so that the strainer will rest approximately two inches from the bottom of the solution tank. This will prevent sediment from clogging the strainer. Slip the ceramic weight over the end of the suction tube. Press the strainer into the end of the tube. Secure the ceramic weight to the strainer. Drop the strainer into the solution tank.

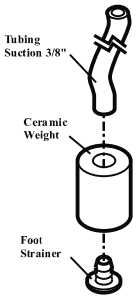

- **Outlet Tubing -** Locate the outlet fitting of the Pump Tube. Remove the tube nut. Push the opaque outlet (discharge) tubing onto the compression barb of the fitting. Use the tube nut to secure the tube. Hand tighten only.

  Keep outlet tube as short as possible.

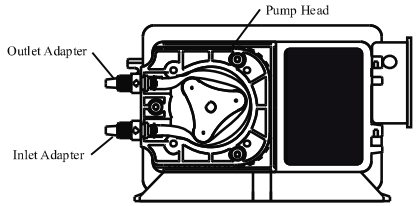

- **Injection/Check Valve Fitting Installation** - The Injection/Check valve fitting is designed to install directly into either 1/4" or 1/2" female pipe threads. This fitting will require periodic cleaning, especially when injecting fluids that calcify such as sodium hypochlorite. See section 7.0. Install the Injection/Check valve directly into the piping system. To prevent trapped gasses, install the fitting in an upward direction. Use Teflon thread sealing tape on the pipe threads.
  Push the opaque outlet (discharge) tubing onto the compression barb of the Injection/Check valve fitting. Use the tube nut to secure the tube. Hand tighten only.

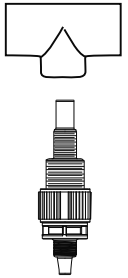

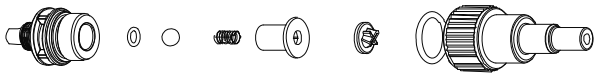

6.0 How to Maintain the Pump

CAUTION: Proper eye and skin protection must be worn when installing and servicing the pump.

6.1 Routine Inspection and Maintenance

The pump requires very little maintenance. However, the pump and all accessories should be checked weekly. This is especially important when pumping chemicals. Inspect all components for signs of leaking, swelling, cracking, discoloration or corrosion. Replace worn or damaged components immediately.

Cracking, crazing, discoloration and the like during the first week of operation are signs of severe chemical attack. If this occurs, immediately remove the chemical from the pump. Determine which parts are being attacked and replace them with parts that have been manufactured using more suitable materials. The manufacturer does not assume responsibility for damage to the pump that has been caused by chemical attack.

6.2 How to Clean and Lubricate the Pump

The pump will require occasional cleaning and lubricating. The amount will depend on the severity of service.

- When changing the pump tube assembly, the pump head chamber, roller assembly and pump head cover should be wiped free of any dirt and debris.
- The pump head cover bearing may require grease periodically. Apply a small amount of grease (Aeroshell aviation grease #5 or equivalent) when necessary.
- Although not necessary, 100% silicon lubrication may be used on the roller assembly and tube assembly.
- Periodically clean the injection/check valve assembly, especially when injecting fluids that calcify such as sodium hypochlorite. These lime deposits and other build ups can clog the fitting, increase the back pressure and interfere with the check valve operation.
- Periodically clean the suction strainer.
- Periodically inspect the air vents located under the motor compartment and on the rear panel. Clean if necessary.

6.3 How to Replace the Pump Tube

The pump tube assembly will eventually break if not replaced. The tube has been designed for a minimum service life of 500 hours. However, the life of the tube is affected by many factors such as the type of chemical being pumped, the amount of back pressure, the motor RPM, temperature and others. The pump tube assembly must be inspected and replaced regularly.

Remove the Old Pump Tube - The pump roller assembly spins in a counter clockwise direction. The pump head inlet (suction) side is located at the bottom of the pump and the outlet (discharge) is located at the top of the pump head.

- Release any pressure that may be in the discharge tubing.
- Disconnect the suction and discharge tubes from the pump tube.
- Remove the pump head cover.
- With the pump running, pull the inlet fitting out of the pumphead. Guide the tube counter clockwise away from the rollers. Pull the outlet fitting out of the pump head.

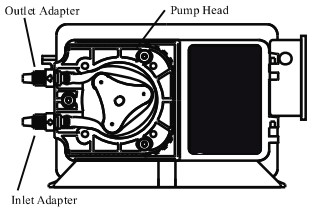

Install the New Pump Tube - Be sure the pump head chamber is clean and free of any debris.

Remove and inspect the roller assembly. Be sure the rollers spin freely. If required, apply a small amount of grease to the pump head cover bearing.

- With the pump running, insert the inlet (suction) side of the Pump Tube fitting into the pump head.
- **Carefully** guide the Pump Tube into the pump head. Stretch the tube slightly and insert the outlet (discharge) fitting into the upper retaining slot in the pump head.
- Place the clear cover on the pump head and secure with three screws.

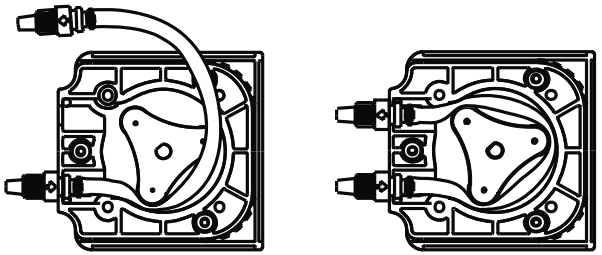

REPLACEMENT PARTS DRAWING

REPLACEMENT PARTS LIST

Item	Part No	Description	Qty
1	71000-214	Enclosure Back With Gasket,	1
2	90011-094	Washer, #10 Stainless	2
3	90011-091	Screw, #10 X 1.0" Phillips Steel	4
6	90006-580	Gasket, Back Plate, Neoprene	1
9	90010-110	Power Cord, 1	1
10	A-033N	Cord Inlet Bushing	1
11	90003-559	Mounting Feet, Rubber	4
12	76001-000	Slide Clamp, Enclosure Rear	1
13	76000-999	Slide Clamp, Enclosure Front	1
15	90006-579	Gasket, Enclosure Front, Neoprene	1
16	90002-191	Door, Electronic Controls Cover	1
17	70002-241	G/motor, V/S 14Rpm, 90VDC	1
	70002-242	G/motor, V/S 30Rpm, 90VDC	1
	70002-243	G/motor, V/S 45Rpm, 90VDC	1
	70002-244	G/motor, V/S 60Rpm, 90VDC	1
22	76001-029	Junction Box, Valox	1
23	90011-129	Screw, 6-32 X .25 S Black	2
24	71000-133	Cover, J-Box w/Gasket &Label	1
25	70000-656	J-Box Assembly, Complete	1
26	90008-151	J-box Hole Plug .75 Dia Blk	1
27	76001-009	Pumphead, no TFD sensors	1
	71000-488	Pumphead, w/TFD sensors	1
28	C-324N	Screw, P/head, 10-32 X .50	4
29	A-031	Spacer, Rotor	1
30	#1T	Pump Tube, Tygothane .25 O.D.	1
	#2T	Pump Tube Tygothane, .37 O.D.	1
	#3T	Pump Tube, Tygothane .43 O.D.	1
31	C-330-6	Nut, Tube, .37 O.D. Tubing	1
36	C-335-6	Tubing, Outlet, .37O.D.X5ft, Poly	1
37	C-334-6	Tubing, Inlet, .37O.D.X5ft, Pvc	1
38	C-346	Weight, Inlet Tubing, Ceramic	1
39	C-342-2	Strainer, Inlet Tube, Polypro	1
40			1
	71000-350	Roller, -7 tubes (black rollers)	1
45	71000-156	Cover, P/head With Bearing	1
46	76001-003	Bearing, Sleeve, P/head Cover	1
48	90011-160	Screw, P/head Cover, 8-32 X .62	3
49	A-014N-6A	Inj Valve, .5-.25 Mpr X .37 O.D.	1
50	90006-583	Motor Clip, 14, 30RPM	1
	90006-601	Motor Clip, 45, 60RPM	1
51	90011-146	Screw, Motor Clip, 8-32 X .25	1
52	90007-515	Bushing, J-Box Connector, Alum.	1
53	76001-029	Junction Box, Valox	1
54	90011-129	Screw, 6-32 X .25 S Black	2
55	71000-133	Cover, J-Box w/Gasket &Label	1
56	70000-656	J-Box Assembly, Complete	1
N/S	90008-151	J-box Hole Plug .75 Dia Blk	1
			1
59	90011-023	Screw, Motor, 8-32 x .50 Phill	2
60	C-1814N-2	Motor brush set, 90VDC motor	1

LIMITED WARRANTY

Your new pump is a quality product and is warranted to be free of defects as set down in this policy. Peristaltic pump tube assemblies are not warranted. Parts are covered under warranty for 12 months from the date of purchase. Warranty coverage does not include damage to the pump that results from misuse, carelessness, abuse or alteration. Only the repair or the replacement of the pump is covered. Excell Feeders does not assume responsibility for any other loss or damage.

Warranty status is determined by the pump's serial label. The serial label must be on the pump to obtain warranty coverage. The warranty status of the pump will be verified by Excell Feeders.

PROCEDURE FOR IN WARRANTY REPAIR

Carefully pack the pump to be repaired. Enclose a brief description of the problem. Prepay all shipping costs. COD shipments will not be accepted. Warranty service must be performed by the factory. Damage caused by improper packaging is the responsibility of the sender.



Users of electrical and electronic equipment (EEE) with the WEEE marking per Annex IV of the WEEE Directive must not dispose of end of life EEE as unsorted municipal waste, but use the collection framework available to them for the return, recycle, recovery of WEEE and minimize any potential effects of EEE on the environment and human health due to the presence of hazardous substances. The WEEE marking applies only to countries within the European Union (EU) and Norway. Appliances are labeled in accordance with European Directive 2002/96/EC.
Contact your local waste recovery agency for a *Designated Collection Facility* in your area.

AUTOMATIONDIRECT.com

IRONHORSE™

GSD4 Series DC Drives User Manual

User Manual Number: IH-GSD4-User-M





WARNING

Thank you for purchasing automation equipment from Automationdirect.com®, doing business as AutomationDirect. We want your new automation equipment to operate safely. Anyone who installs or uses this equipment should read this publication (and any other relevant publications) before installing or operating the equipment.

To minimize the risk of potential safety problems, you should follow all applicable local and national codes that regulate the installation and operation of your equipment. These codes vary from area to area and usually change with time. It is your responsibility to determine which codes should be followed, and to verify that the equipment, installation, and operation is in compliance with the latest revision of these codes.

At a minimum, you should follow all applicable sections of the National Fire Code, National Electrical Code, and the codes of the National Electrical Manufacturer's Association (NEMA). There may be local regulatory or government offices that can also help determine which codes and standards are necessary for safe installation and operation.

Equipment damage or serious injury to personnel can result from the failure to follow all applicable codes and standards. We do not guarantee the products described in this publication are suitable for your particular application, nor do we assume any responsibility for your product design, installation, or operation.

Our products are not fault-tolerant and are not designed, manufactured or intended for use or resale as on-line control equipment in hazardous environments requiring fail-safe performance, such as in the operation of nuclear facilities, aircraft navigation or communication systems, air traffic control, direct life support machines, or weapons systems, in which the failure of the product could lead directly to death, personal injury, or severe physical or environmental damage ("High Risk Activities"). AutomationDirect specifically disclaims any expressed or implied warranty of fitness for High Risk Activities.

For additional warranty and safety information, see the Terms and Conditions section of our catalog. If you have any questions concerning the installation or operation of this equipment, or if you need additional information, please call us at 770-844-4200.

This publication is based on information that was available at the time it was printed. At AutomationDirect we constantly strive to improve our products and services, so we reserve the right to make changes to the products and/or publications at any time without notice and without any obligation. This publication may also discuss features that may not be available in certain revisions of the product.

TRADEMARKS

This publication may contain references to products produced and/or offered by other companies. The product and company names may be trademarked and are the sole property of their respective owners. AutomationDirect disclaims any proprietary interest in the marks and names of others.

Copyright © 2013, 2014 Automationdirect.com® Incorporated

All Rights Reserved

No part of this manual shall be copied, reproduced, or transmitted in any way without the prior, written consent of Automationdirect.com® Incorporated. AutomationDirect retains the exclusive rights to all information included in this document.

CONTENTS

WARNING 2
TRADEMARKS 2
GSD4 DC DRIVES USER MANUAL OVERVIEW 3
IRONHORSE GSD4 SERIES DC DRIVES GENERAL INFORMATION 4
SELECTION AND SPECIFICATIONS 6
DIMENSIONS 7
INSTALLATION AND WIRING 8
START-UP 12
TRIM POT ADJUSTMENTS 14
TROUBLESHOOTING 16
GSD4 SERIES ACCESSORIES 17

GSD4 DC DRIVES USER MANUAL OVERVIEW

OVERVIEW OF THIS PUBLICATION

The IronHorse GSD4 Series DC Drives User Manual describes the installation, configuration, and methods of operation of the GSD4 Series DC Drives.

All information contained in this manual is intended to be correct. However, information and data in this manual are subject to change without notice. AutomationDirect (ADC) makes no warranty of any kind with regard to this information or data. Further, ADC is not responsible for any omissions or errors or consequential damage caused by the user of the product. ADC reserves the right to make manufacturing changes which may not be included in this manual.

WHO SHOULD READ THIS USER MANUAL

This manual contains important information for those who will install, maintain, and/or operate any of the GSD4 Series DC Drives.

TECHNICAL SUPPORT

By Telephone: 770-844-4200 (Mon.–Fri., 9:00 a.m.–6:00 p.m. E.T.)

On the Web: www.automationdirect.com

Our technical support group is glad to work with you in answering your questions. If you cannot find the solution to your particular application, or, if for any reason you need additional technical assistance, please call Technical Support at 770-844-4200. We are available weekdays from 9:00 a.m. to 6:00 p.m. Eastern Time.

We also encourage you to visit our web site where you can find technical and non-technical information about our products and our company. Visit us at www.automationdirect.com.

SPECIAL SYMBOLS



WHEN YOU SEE THE "NOTEPAD" ICON IN THE LEFT-HAND MARGIN, THE PARAGRAPH TO ITS IMMEDIATE RIGHT WILL BE A SPECIAL NOTE.



WHEN YOU SEE THE "EXCLAMATION MARK" ICON IN THE LEFT-HAND MARGIN, THE PARAGRAPH TO ITS IMMEDIATE RIGHT WILL BE A ***WARNING.*** *THIS INFORMATION COULD PREVENT INJURY, LOSS OF PROPERTY, OR EVEN DEATH (IN EXTREME CASES).*

IRONHORSE GSD4 SERIES DC DRIVES GENERAL INFORMATION

IronHorse GSD4 DC drives are designed to control DC Permanent Magnet, Shunt Wound, and some Universal (AC/DC) motors. Incoming AC voltage is converted to adjustable full-wave rectified DC voltage to operate the DC motor. Also, a full-wave field voltage is provided for shunt wound motors.



CAREFULLY CHECK THE DC DRIVE FOR SHIPPING DAMAGE. REPORT ANY DAMAGE TO THE CARRIER IMMEDIATELY. DO NOT ATTEMPT TO OPERATE THE DRIVE IF VISIBLE DAMAGE IS EVIDENT TO EITHER THE CIRCUIT OR TO THE ELECTRONIC COMPONENTS.

STANDARD FEATURES

- Input voltages 24/36VAC or 120/240VAC @ 50/60Hz; output 0–24/36VDC or 0–90/180VDC.
- Adjustable horsepower settings.
- Barrier terminal strip.
- Full-wave bridge supply.
- 1% speed regulation with armature voltage feedback; ±1/2% with tachometer feedback.
- Adjustable Minimum speed, Maximum speed, IR Compensation, Current Limit, Acceleration & Deceleration (enclosed models).
- Line voltage compensation.
- 5kΩ speed potentiometer with leads, dial, and knob included.
- 50:1 speed range.
- Transient voltage protection.
- Voltage following mode or DC tachometer follower by supplying ungrounded 0–12VDC analog input signal.
- DC tachometer feedback (6V at base speed).
- Inhibit circuit permits start & stop without breaking AC lines.
- Shunt field supply provided.
- GSD4-240-10N4X only: NEMA 4X enclosure, Power ON/OFF switch, Power ON indicator, Adjustable acceleration and deceleration.

CONTROL FEATURES

MINIMUM SPEED – Allows adjustment of the motor speed when the speed pot is set at minimum (CCW). This permits the user to eliminate "Deadband" on the main speed control, permitting zero calibration. Clockwise rotation of "MIN" trim pot increases speed.

MAX SPEED (Maximum Speed) – Allows adjustment of the motor speed when the speed pot is set at maximum (CW). This permits the user to eliminate the top end "Deadband", which will provide full speed at maximum rotation. Rotation of the "MAX" trim pot in the clockwise direction increases the maximum motor speed.

I.R. COMP (Speed Regulation) – This allows for adjustment of the circuitry that controls the speed regulation of the motor. The circuitry controls armature speed by changing the armature voltage to compensate for increased or decreased motor loading. Clockwise rotation of the "IR COMP" trim pot will increase compensation.

CUR. LIM. (Current Limit) – Provides protection from excessive armature current by limiting the maximum armature current the drive can provide. This enables adjustment of the maximum torque the motor can deliver. Torque adjustment (Cur. Lim.) is preset at 125% of rated motor torque (current) based on horsepower. Clockwise rotation of the "CUR. LIM." trim pot increases the torque (current) the drive will provide.

INHIBIT TERMINAL PIN – An adjustable acceleration ramp that allows the user a choice of stopping and starting hard (fast), or stopping hard with a soft start (without breaking the AC lines).

There are two ways to Inhibit a drive:

1) For all GSD drives (using the drive's speed pot):

   Remove power from the Speed Pot Wiper, which makes the input to the drive drop to Zero volts. A switch or contact can be placed in either the Speed Pot High lead, or in the Speed Pot Wiper lead.

2) For GSD4, GSD5, and GSD7 drives (using the drive's inhibit feature):

   The inhibit feature provides a way to start/stop output of these drives by using a low-power rated contact (12VDC, mA of current), as opposed to a high-power contact that would be required to switch the source power to the drive.

   Close the circuit between the Inhibit pin (GSD4 & GSD5 Series) or the +TACH terminal (GSD7 only), and the drive's Speed Pot Hi terminal. The drive will stop and start quickly – bypassing any fixed or adjustable ACCEL or DECEL setting. When this connection is CLOSED, the drive's 12VDC logic supply is collapsed by connecting it to a chassis COMMON point – the board logic shuts down and output to the motor ceases. Output to the motor resumes when this contact is opened again.

SELECTION AND SPECIFICATIONS

GSD4 Series DC Drives – Selection & Specifications					
Model		**GSD4-24A-5C**	**GSD4-240-1C**	**GSD4-240-5C**	**GSD4-240-10N4X**
Package Configuration		open frame			NEMA 4X
Power Quality Form Factor		1.4			
Input Voltage (@50/60Hz)		24/36 VAC ±10%	120/240 VAC ±10%		
Output Voltage		0–24/36 VDC	0–90/180 VDC		
Shunt Field Voltage		20VDC @ 24VAC in 30VDC @ 36VAC in (1A max)	100VDC @ 120VAC in 200VDC @ 240VAC in (1A max)		100VDC @ 120VAC in 200VDC @ 240VAC in (0.5A max)
Motor Rating @ Low V (hp) **Motor Rating @ High V (hp)**		1/50 – 1/6	1/50 – 1/8 1/25 – 1/4	1/8 – 1/2 1/4 – 1	1/8 – 1 1/4 – 2
Output Current (continuous)		5.5A (DC)	1.2A (DC)	5.5A (DC)	10A (DC)
Current Overload Capacity		200% for 60s			
Current Limit (adjustable)		1–15A (DC)	0.3–2.5A (DC)	1–15A (DC)	
Transient Protection		–	Metal Oxide Varistor (MOV)		
I.R. Compensation		adjustable			
Speed Adjustment	**Potentiometer**	5kΩ potentiometer or 0–10VDC isolated input signal (See "GSDA-AI-V4" on page 18.)			
	Current	4–20mA			n/a
	Voltage	n/a	0–5VDC thru 0–250VDC		
Speed Range		50:1			
Speed Regulation		±1% of base speed			
Maximum Speed		adjustable from 60% to 110% of base speed			
Minimum Speed		0–30% of adjustable maximum speed			
Acceleration		0.5 seconds			adjustable 0.5–8 seconds
Deceleration					
Dynamic Braking		no			
Plugging Capability **		no			
Electrical Connections		8-position terminal strip; 22–14 AWG			
External Fusing Required		Bussman ABC or Littlefuse 314 series ceramic fuses or equivalent For details, refer to "Fusing" on page page 8.			
Operating Temperature		-10 to 45 °C [14 to 113 °F]			-10 to 40 °C [14 to 104 °F]
Thermal Protection		current limiting			
Mounting Orientation		can be mounted in any orientation			
Corrosive Gases		NOT compatible with any corrosive gases			
Weight		8.0 oz [203g]	37 oz [1049g]	10.5 oz [297g]	59.5 oz [1687g]
Agency Approvals		RoHS, CE	cULus Listed (E198015), RoHS, CE		cULus Listed (E198015), RoHS
Optional Accessories *					
Replacement Potentiometer		GSDA-5K			
Digital Potentiometer		GSDA-DP			
Manual Reverse Switch		GSDA-MREV			
Accel/Decel Adjustment Card		GSDA-ACCDEC-4			
Analog Current Input Card		GSDA-AI-A			–
Analog Voltage Input Card		–	GSDA-AI-V4		–
Heatsink		GSDA-HTSNK-4			–

** For accessories details, please visit www.AutomationDirect.com.*
*** Plugging is a method of rapidly changing motor direction by reversing motor armature polarity, while the motor is still running.*

DIMENSIONS (dimensions = in [mm])

GSD4-24x-xC

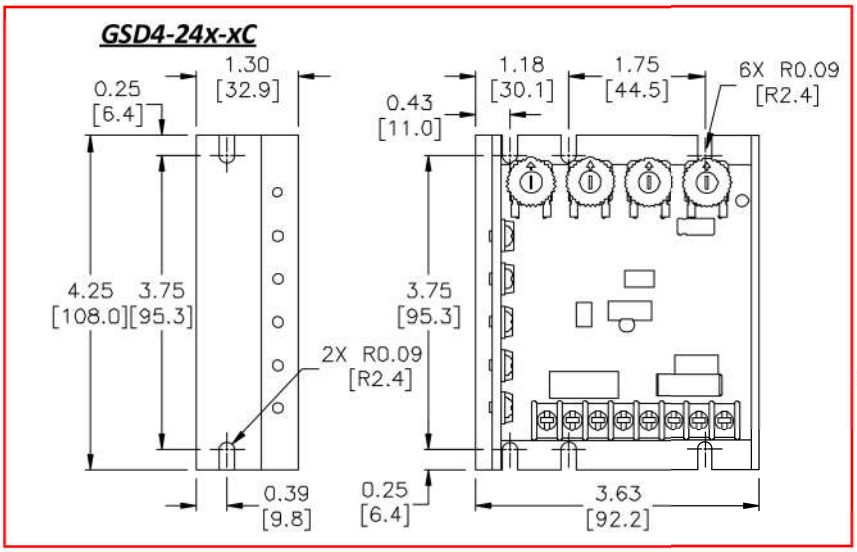

GSD4-240-10N4X

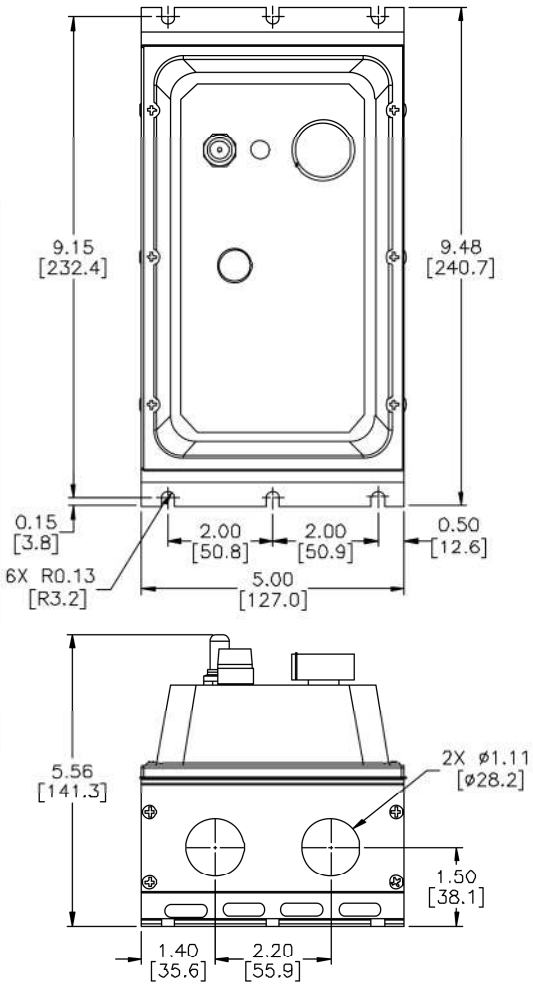

Installation and Wiring

Install open-frame drives in an enclosure with a volume at least three times the volume of the open-frame drive.

Do not mount GSD4-24x-xxxxx DC drive where ambient temperature is outside the range of -10 to 45 °C (14 to 113 °F).

Size all wires that carry armature or line currents as specified by applicable national, state, and/or local codes. All other wires may be 18AWG or smaller as permitted by the codes.

Separate control wires from the armature and AC lines when routed in conduit or wire trays.

These drives do not provide motor over-temperature sensing or motor overload protection. The need for additional motor overload and motor over-temperature protection shall be determined based on conditions in the end installation in accordance with the NEC.

CAUTION!! Turn power OFF while making wiring connections.

Improper installation or operation of this DC Drive may cause injury to personnel or drive failure. The drive must be installed in accordance with local, state, and national safety codes. Make certain that the power supply is disconnected before attempting to service or remove any components!!! If the power disconnect point is out of sight, lock it in disconnected position and tag it to prevent unexpected application of power. Only a qualified electrician or service personnel should perform any electrical troubleshooting or maintenance. At no time should circuit continuity be checked by shorting terminals with a screwdriver or other metal device.

Before attempting to wire the DC Drive, make sure all power is disconnected. Recheck code designation to assure proper voltage is present for the DC Drive. Carefully select proper wire size for current and voltage drop. Limit the voltage drop through the wiring to 5% of the line voltage at full load

CAUTION!! Do not attempt to perform a hi-pot test across the AC lines with the DC drive in the circuit. This will result in immediate or long-term damage to the drive.

1) Ensure that the GSD4 drive chassis is properly grounded.
2) Motor armature connections must not be switched or broken while the GSD4 drive is ON. Serious damage may result.
3) The inputs to the speed pot terminals (P1-6, P1-7, P1-8) must not be grounded. Serious damage may result.

Fusing

Fuse Selection *				
	GSD4-24A-5C	Select fusing based on 200% of motor Full-Load Current		
	GSD4-240-xC		GSD4-240-10N4X	
Motor HP	Fuse @ 120 VAC Input	Fuse @ 240 VAC Input	Fuse @ 120 VAC Input	Fuse @ 240 VAC Input
1/50	2A	–	–	–
1/20	2A	1A	–	–
1/8	3A	2A	2A	–
1/4	4A	3A	4A	2A
1/3	6A	3A	6A	3A
1/2	8A	4A	8A	4A
3/4	12A	6A	12A	6A
1.0	15A	8A	15A	8A
1.5	–	12A	–	12A
2.0	–	15A	–	15A

** Select fuse type Bussman ABC or Littlefuse 314 series or equivalent. Fuse hot legs only; do not fuse AC neutrals. (AutomationDirect sells ABC series fuses.)*

WIRING TERMINALS

GSD4 Wiring Terminals			
Type	**Wire Range**	**Customer Wiring Temp Rating**	**Tightening Torque**
8-position terminal strip	22–14 AWG	300V, 75 °C [167 °F] minimum	9.0 lb·in [1.0 N·m]

WIRING TERMINAL FUNCTIONS

GSD4-xxx-xC WIRING TERMINALS

GSD4-xxx-xC Series DC Drives – Terminal Strip Functions CAUTION: BE SURE DRIVE HOUSING IS PROPERLY GROUNDED.	
Number	**Purpose**
P1-1	(L / AC1) 120VAC – Connect incoming hot AC (black wire) to this terminal. (L / AC1) 240VAC – Connect either hot side. Connect ground (green wire) to drive chassis.
P1-2	(N / AC2) 120VAC – Connect the neutral AC (white wire) to this terminal. (N / AC2) 240VAC – Connect either hot side. Connect ground (green wire) to drive chassis.
P1-3	(+ ARM) – Connects to the plus (+) Armature wire on the motor. 0-90VDC for 120VAC input or 0-180VDC for 240 VAC input. See "SPECIFICATIONS" for output rating. *CAUTION: ARMATURE CONNECTION MUST NOT BE SWITCHED OR BROKEN WHILE DRIVE IS ON, OR SERIOUS DAMAGE TO THE DRIVE MAY RESULT.*
P1-4	(- ARM / -FIELD) – Connects to minus (-) Armature wire on the motor, and, if necessary, (-) Field wire of Shunt Wound motor.
P1-5	(+ FIELD) – DO NOT use for Permanent Magnet motor. This supplies (+) Field voltage for a Shunt Wound motor. For motors with dual voltage field (i.e. 50/100V or 100/200V), make sure the highest value is connected.
P1-6	(SPEEDPOT HI) – Connects to high side (white wire) of the Speed pot (CW end). This is internal +12 volts. *INPUT MUST NOT BE GROUNDED !*
P1-7	(SPEEDPOT WIPER) – Connects to the wiper (red wire) of the Speed pot (center lead). For voltage-follower applications, this *INPUT MUST NOT BE GREATER THAN +12V MAXIMUM AND MUST NOT BE GROUNDED !* *Speed pot can be replaced by 0–10V analog signal. See "GSDA-AI-V4" on page 18, or use FC-33 or equivalent.*
P1-8	(SPEEDPOT LO) – Connects to the low side (orange wire) of the 5kΩ Speed pot (normally the CCW end). This input is raised and lowered by the MIN trim pot. Electronic speed input voltage (voltage follower) may be referenced to Speed pot LO if the MIN trim pot adjustments are to be active. Otherwise, inputs may be referenced to -ARM (P1-4), which will bypass the MIN trim pot. *INPUT MUST NOT BE GROUNDED !*

GSD4-240-10N4X WIRING TERMINALS

GSD4-240-10N4X Series DC Drives – Terminal Strip Functions CAUTION: BE SURE DRIVE HOUSING IS PROPERLY GROUNDED.	
Number	**Purpose**
	P4 – Terminal Strip for Power & Motor Armature Wiring
P4-1	(L / AC1) 120VAC – Connect incoming hot AC (black wire) to this terminal. (L / AC1) 240VAC – Connect either hot side. Connect ground (green wire) to drive ground lug.
P4-2	(N / AC2) 120VAC – Connect the neutral AC (white wire) to this terminal. (N / AC2) 240VAC – Connect either hot side. Connect ground (green wire) to drive ground lug.
P4-3	(+ ARM) – Connects to the plus (+) Armature wire on the motor.
P4-4	(- ARM) – Connects to minus (-) Armature wire on the motor.
	P1 – Terminal Strip for Shunt-Wound Motor Field Wiring
P1-4	(-FIELD) – Connects to minus (-) Field wire of shunt-wound motors ONLY.
P1-5	(+ FIELD) – DO NOT use for Permanent Magnet motor. This supplies (+) Field voltage for a Shunt-Wound motor. For motors with dual voltage field (i.e. 50/100V or 100/200V), make sure the highest value is connected

WIRING DIAGRAMS

GSD4-24x-xC BASIC WIRING DIAGRAM

SPEED POT CAN BE REPLACED BY AN 0–10V ANALOG SIGNAL FOR SPEED CONTROL (FROM A PLC, ETC.). SEE "GSDA-AI-V4" ON PAGE 18.

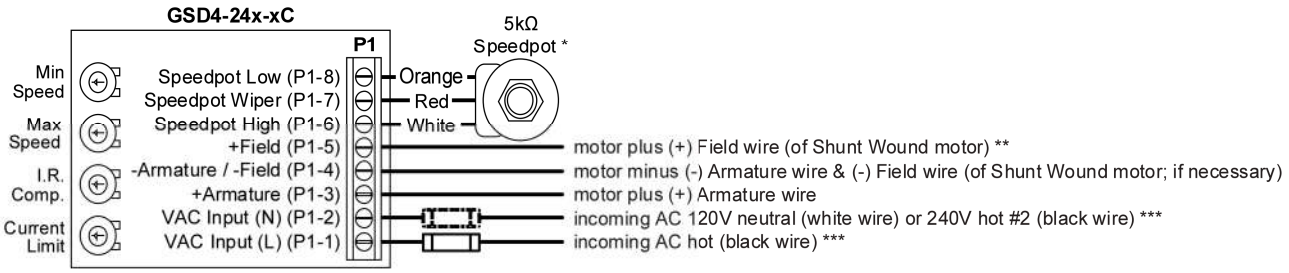

* *P1-6 has internal +12V, and connects to Speedpot High (white wire). THIS INPUT MUST NOT BE GROUNDED! For start-stop applications, the connection between P1-6 and Speedpot High can be opened and closed by a SPST switch.*

* *P1-7 connects to Speedpot Wiper (red wire). THIS INPUT MUST NOT BE GROUNDED! For Voltage-Follower applications, THIS INPUT MUST NOT BE GREATER THAN +12V MAXIMUM!*

* *P1-8 connects to Speedpot Low, and is raised and lowered by the Min Speed trimpot. THIS INPUT MUST NOT BE GROUNDED! Electronic speed input (voltage follower) may be referenced to this input if the Min Speed trimpot adjustments are to be active. Otherwise, inputs may be referenced to -Armature, which will bypass the Min Speed trimpot.*

** *+F connection is only for Shunt Wound motor; NOT for Permanent Magnet motor. For motors with dual voltage field, i.e. 50/100V or 100/200V, connect the highest value.*

*** *Fuse hot AC inputs only; refer to Fusing section for size and type. Fuse both AC lines for 240 VAC input. Do NOT fuse AC(N) on 120V systems. Connect incoming AC ground (green wire) to GSD4 chassis.*

GSD4-240-10N4X BASIC WIRING DIAGRAM

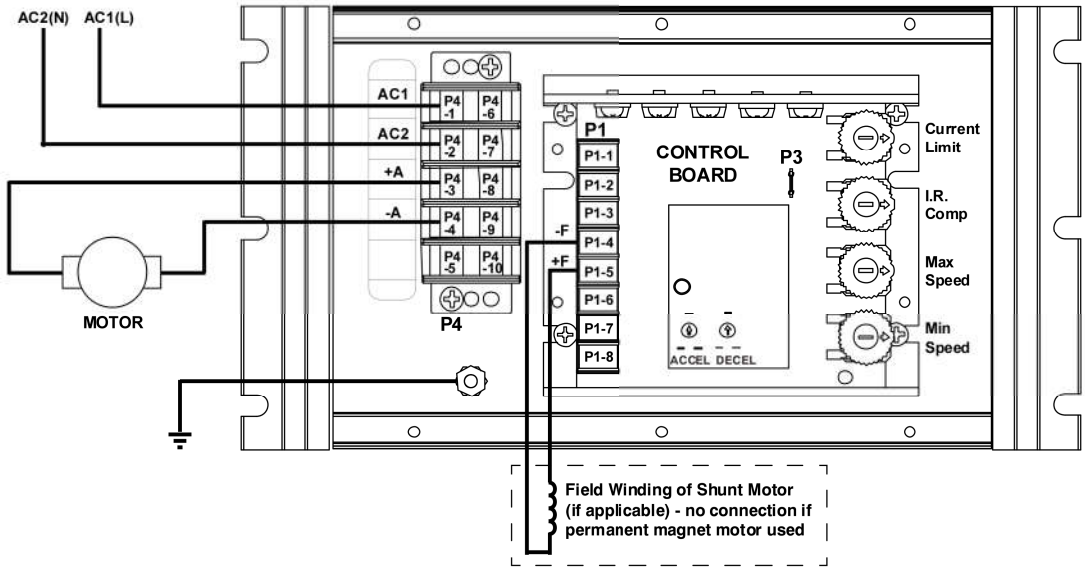

GSD4-24x-xxx Reversing Wiring Diagram

CAUTION: WHEN REVERSING A SPINNING PERMANENT MAGNET DC MOTOR, CAUTION MUST BE TAKEN THAT THE RESULTING CURRENT THROUGH THE ARMATURE OF THE MOTOR DOES NOT EXCEED THE OVERLOAD RATINGS OF THE DC DRIVE, OR THE DEMAGNETIZE RATING OF THE MOTOR BEING REVERSED. A CENTER-BLOCKED SWITCH WILL DELAY SWITCHING THE MOTOR DIRECTION. IF USING RELAYS TO AUTOMATICALLY REVERSE THE MOTOR, MAKE SURE TO HAVE A DELAY BETWEEN CHANGING MOTOR DIRECTIONS.

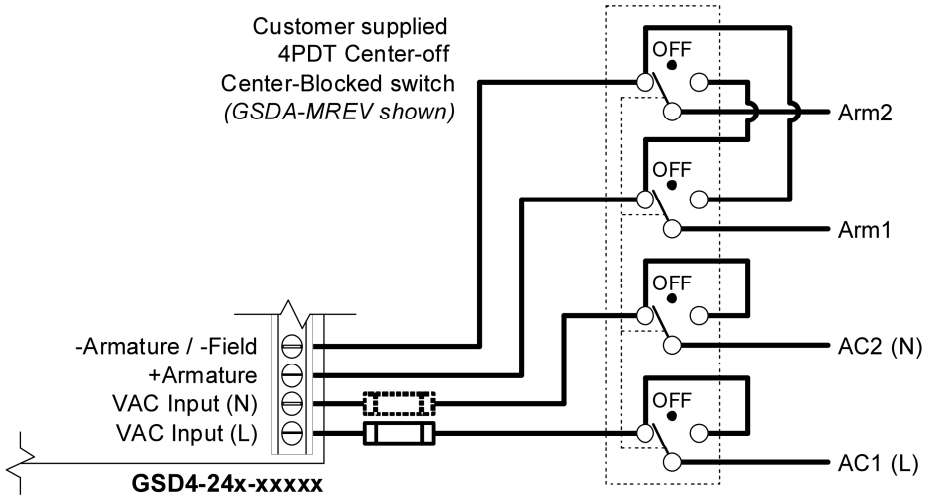

GSD4-24x-xC Two-Speed Operation

Two-speed operation is done using two 10 kΩ speed potentiometers in parallel, with both Highs connected to terminal P1-6, and both Lows connected to P1-8. A SPDT switch selects which pot Wiper is connected to terminal P1-7.

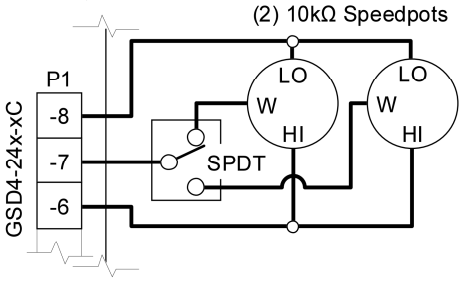

GSD4-24x-xC Dynamic Braking

A DPDT switch is used to control and to connect a customer-supplied Dynamic Braking Resistor (DBR). Typical values for the DBR are 35–50W at 5Ω for 120V, or 10Ω for 240V. Motor horsepower, inertia, and cycle time affect the sizing of the DBR.

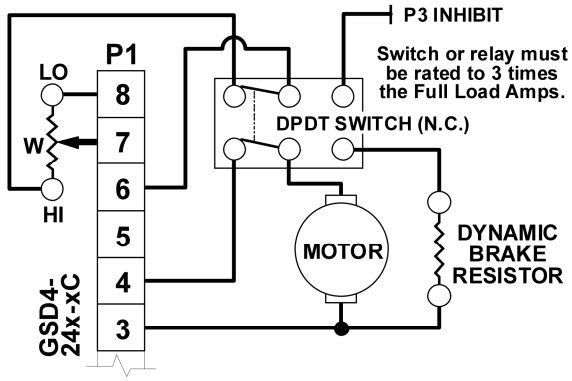

GSD4-24x-xxx Tachometer Feedback

Improves regulation to ± 1/2% of base speed.

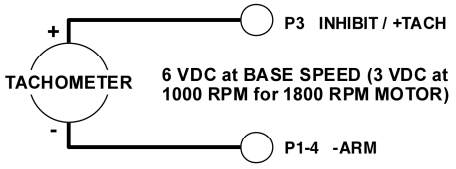

GSD4-24x-xxx Tachometer Follower

Allows drive output to follow tachometer voltage.

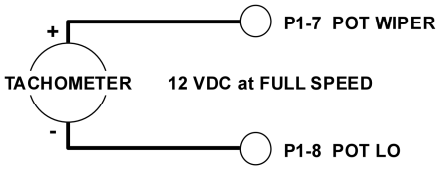

TACHOMETER CONTROL NEEDS TACHOMETER OUTPUT OF 7VDC/1000RPM WITH RIPPLE LIMITED TO 1% OR LESS.

INSTALLATION AND WIRING – WIRING DIAGRAMS (CONTINUED)

INHIBIT FEATURE START/STOP CONTROL

The inhibit feature allows the motor to be remotely started and stopped using a lower-rated 12VDC contact in the drive control circuit, instead of a higher-rated contact in the power circuit.

GSD4-24X-XC INHIBIT (USED INDEPENDENTLY)

This inhibit method bypasses the drive's Accel and Decel settings to start and stop the motor. It instantly shuts off the drive's output, and the motor freewheels to a stop. Start and stop rates are determined by the inertia of the load.

The customer-supplied SPST switch is connected in series between the Speed Pot High (P1-6) and the Inhibit pin (P3). To inhibit (stop motor), close Speed Pot High to the Inhibit pin. To restart, return the switch to open.

Fast Stop & Start:

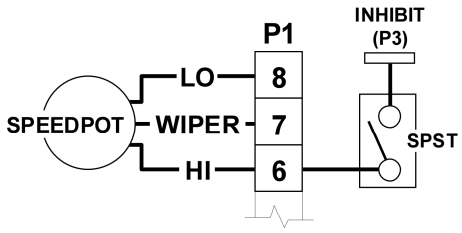

GSD4-24X-XC INHIBIT (USED WITH SPEED POT)

This inhibit method bypasses the drive's Decel settings when stopping the motor, and the motor freewheels to a stop at a rate determined by the inertia of the load. However, the start rate is determined by drive's Accel setting.

The common of the SPDT switch is connected to control pot High, and is switched between Speed Pot High (P1-6) and the Inhibit pin (P3). To inhibit (stop motor), Speed Pot High is closed to the Inhibit pin. To restart, return the switch to Speed Pot High.

Fast Sop. Soft Start (thru accel range):

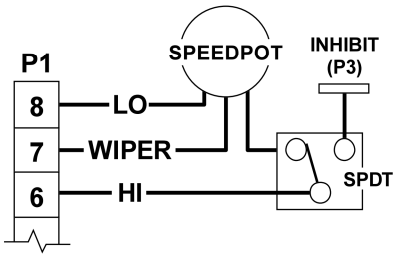

1) IN THE EVENT OF SCR FAILURE OR FALSE TRIGGERING, THE INHIBIT CIRCUIT WILL NOT STOP THE MOTOR.
2) ALWAYS USE SHIELDED WIRE WHEN CONNECTING TO THE INHIBIT TERMINAL, AND CONNECT THE SHIELD TO THE -ARMATURE OR COMMON OF THE DRIVE.

START-UP

START-UP FOR GSD4-24X-XC

3) Recheck all wiring. Accidental grounds, loose or pinched wires on armature or speed pot wires may damage the DC drive when power is applied.
4) Check to see that the incoming power is of the correct voltage.
5) Turn the speed pot to zero (fully CCW).
6) Turn power on, and advance the speed pot while observing motor.
   Power must be turned off again before step 5 can be accomplished!
7) If the motor rotation is incorrect, turn power off at external disconnect, and reverse the +ARM and -ARM connections.
8) Check for satisfactory operation throughout the speed range.
9) *If operation is satisfactory, no readjustments are needed.*
10) If instability or surging is observed, or if maximum speed is higher than desired, refer to the "Trim Pot Adjustments" section."
11) For other problems, consult the "Troubleshooting" section.

START-UP FOR GSD4-240-10N4X

1) Safety Precautions:
   a) Observe the normal safety precautions for the voltages involved. We strongly suggest that only qualified electricians or service people should install, troubleshoot, maintain, or service the drive, motor, and interconnect wiring.
   b) Be sure power is disconnected or shut OFF at fuse box or circuit breaker when installing the drive and making adjustments (except running adjustments).
   c) Remove the load from motor (or gearmotor) before running it.
   d) Use an insulated screwdriver to make trim pot adjustments.



WHEN MAKING RUNNING ADJUSTMENTS, BE VERY CAREFUL NOT TO TOUCH ANY COMPONENTS EXCEPT THE ADJUSTING POTS.

2) On the drive front panel, turn the drive ON-OFF switch to off and set the drive pot knob fully counterclockwise (CCW) and check line fuse. The fuse should be as specified by the Fuse Selection Table.
3) Check all the connections at the drive terminals and at the motor. Make sure that they are tight and are made according to the "Installation and Wiring" section.
4) Rotate the motor's shaft manually to make sure it turns freely. A slight resistance may be noticed.
5) Turn the drive ON-OFF switch to the ON position and then slowly turn the Speed Control knob clockwise (CW) while observing direction of motor rotation. If opposite direction of rotation is desired, correct by turning OFF the drive and then reverse the motor armature connections.
6) With AC line power and control back ON, slowly turn Speed Control knob fully CW while observing the motor. Motor should accelerate smoothly to top speed.
7) Turn OFF control and AC power to drive.
8) Reconnect the motor load that the motor will normally drive.
9) Turn AC power and the drive back ON and adjust the trim pots as shown below for the motor horsepower and voltage being used.

	CL IR MAX MIN	HP
GSD-240-10NX4 INPUT 120 VAC OUTPUT 0-90 VDC	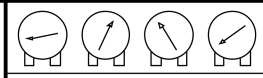	1/8
	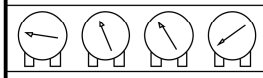	1/4
	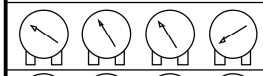	1/3
	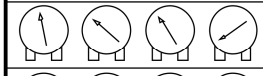	1/2
	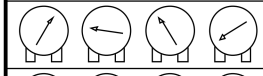	3/4
	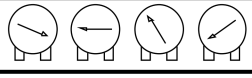	1.0
Operation of the control beyond ±10% of the normal line voltage could result in re-adjustment. These adjustments are permanent; periodic re-adjustment is normally not needed.		

	CL IR MAX MIN	HP
GSD-240-10NX4 INPUT 230 VAC OUTPUT 0-180 VDC	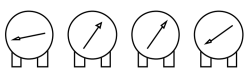	1/4
	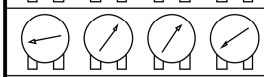	1/3
	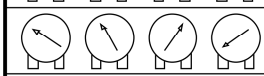	1/2
	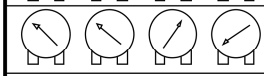	3/4
	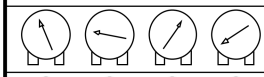	1.0
	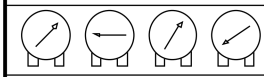	1.5
	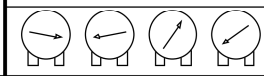	2.0

10) Test the drive and motor under actual operating and load conditions; run the motor through the entire range of speeds required while it is fully loaded. Check motor speed with a tachometer. If control/motor performance is still not satisfactory, continue adjusting the control by following the procedures given in the "GSD4-240-10N4X Trim Pot Adjustment" section on page 15.

TRIM POT ADJUSTMENTS

If the system is unstable after the previous Start-Up procedure, then adjust the trim pots as described in this section.

GSD4-24A-5C TRIM POT ADJUSTMENT

GSD4-24A-5C Trim Pot Adjustment *		
Trim Pot	***Function***	***Adjustment***
Min	Sets minimum motor speed when speed pot is set at zero. CW rotation will increase minimum motor speed.	1) Set Speed pot to zero (fully CCW). 2) Rotate MIN trim pot CW until motor starts to rotate. 3) Slowly rotate MIN trim pot CCW until motor stops. NOTE: If motor rotation is desired, rotate MIN trim pot CW until desired MIN speed is reached.
IR Comp	Provides a means of improving motor speed regulation in the armature feedback mode. If a slowdown due to load change is of no concern, rotate this trim pot fully CCW.	1) Set Speed pot at 50%. 2) Observe motor speed at no load condition. 3) Apply full load to motor. 4) Turn IR COMP trim pot CW to obtain the same motor speed as with no load.
Max	Sets maximum motor speed when speed pot is set at maximum (fully CW rotation). CW rotation of MAX trim pot increases maximum motor speed.	1) TURN DRIVE POWER OFF!! 2) Connect a DC Voltmeter: + to +ARM; - to -ARM. *NOTE: Meter must not be grounded!!* 3) Set meter voltage range: (90 VDC for 120 VAC; 180 VDC for 240 VAC). 4) Turn power on. Set Speed pot at 100%. 5) Adjust MAX trim pot to rated motor armature voltage as shown on meter. *NOTE: A tachometer or strobe may be used in lieu of a meter.* Follow above steps, except adjust MAX trim pot to rated motor base speed indicated by tachometer or strobe.
Cur Lim	Limits DC motor armature current (torque) to prevent damage to the motor or drive. The current limit is set for the rated motor current. CW rotation of this trim pot increases the armature current (or torque produced).	1) TURN DRIVE POWER OFF! 2) Connect a DC Ammeter between A1 on motor and +ARM on drive. This is in series with the motor. 3) Turn power on. 4) Set Speed pot at the 50% position. 5) Apply friction braking to motor shaft until motor stalls. 6) With motor stalled, set current at 125% of rated motor armature current by adjusting CUR. LIM. trim pot.
** This adjustment procedure is only for the GSD4-24A-5C DC Drive. Adjustments are done with motor connected to drive.*		

GSD4-240-xC TRIM POT ADJUSTMENT

Settings apply when using a 5K ohm master speedpot. This chart is used in conjunction with the adjustment procedure and is approximate.

	C.L.	I.R.	MAX	MIN	HP
GSD4-240-1C 120 VAC input; 0-90 VDC output					**1/50**
					1/20
					1/8
GSD4-240-5C 120 VAC input; 0-90 VDC output					**1/8**
					1/4
					1/3
					1/2
					3/4*
					1.0*

Operation of the control beyond ±10% of the normal line voltage could result in re-adjustment. These adjustments are permanent; periodic re-adjustment is normally not needed.

Settings apply when using a 5K ohm master speedpot. This chart is used in conjunction with the adjustment procedure and is approximate.

HP	C.L.	I.R.	MAX	MIN	
1/20					**GSD4-240-1C** 240 VAC input; 0-180 VDC output
1/8					
1/4					
1/4					**GSD4-240-5C** 240 VAC input; 0-180 VDC output
1/3					
1/2					
3/4					
1.0					
1.5*					
2.0*					

* ADDITIONAL CUSTOMER HEATSINK REQUIRED for GSD4-240-5C with 120 VAC input & motors > 1/2 hp, and with 240 VAC input & motors > 1hp. Extrusion temperatures must not exceed 70 °C.

TRIM POT ADJUSTMENTS (CONTINUED)

GSD4-240-10N4X TRIM POT ADJUSTMENT

Use the applicable sections of the following procedures if the "Start-Up" procedures did not provide satisfactory motor/control performance. Follow the Safety Precautions given in the "Start-Up" section.

MAX SETTING

If a different maximum speed or voltage is desired, adjust the MAX trim pot (on circuit board) as follows:

1) Turn ON AC power to the control.
2) Set Speed Control knob fully (100%) CW.
3) Check motor speed and voltage with a tachometer and a DC Voltmeter.
4) Using an insulated handle screwdriver, adjust the MAX trim pot on the drive PC board. CW adjustment of the pot increases the maximum output to the motor; CCW adjustment decreases the maximum output to the motor.
   NOTE: Do not increase maximum motor speed above 1800 RPM for motors rated at 1725 RPM. Do not operate motor continuously above the rated DC voltage.

MIN SETTING

If a minimum speed is desired, adjust as follows:

1) Turn ON AC power to the drive.
2) Turn Speed Control knob CCW as far as possible.
3) Check motor output speed or voltage
4) Adjust the MIN trim pot on the drive PC board. CW adjustment of the pot increases output to the motor; CCW adjustment decreases.
   NOTE: Typically the MIN pot should be set at Deadband which is the point in the CW rotation just before getting an output.

IR SETTING

If better speed regulation is needed, then adjust the IR pot as follows:

1) Set speed at 50%.
2) Check speed with Tach at no load.
3) Apply normal load to the motor.
4) Adjust the IR pot CW to increase speed regulation or CCW to decrease speed regulation until loaded motor speed is equal to unloaded motor speed.

CUR LIM SETTING

Limits DC motor current to prevent damage to the motor or drive. CW rotation of this trim pot increases the maximum allowable armature current (or torque produced). To set:

1) Connect a DC current meter between A1 on motor and +ARM on the control (in series with the motor).
2) Set Speed pot at 50% or above.
3) Turn CL trim pot full CCW.
4) Stall and lock motor shaft so it can not spin.
5) With motor stalled, set current at 125% of rated motor current by adjusting CL trim pot CW.

ACCEL/DECEL SETTING

Individually Adjustable Linear Accel and Decel. These trim pots provide independently adjustable linear accel and decel from 0.5 to 8.0 seconds. Adjustment of both trim pots are accomplished via the labeled access holes on adder board. Full CCW rotation equals minimum accel or decel time, and full CW rotation equals maximum accel or decel time. Note: Each trim pot operates independently of the other.

TROUBLESHOOTING

If a newly installed DC Drive will not operate, it is likely that a terminal connection is loose. Check the terminal connections and ensure that they are secure and correct. If the drive is still inoperative, refer to the Troubleshooting Table.

Troubleshooting		
Problem	***Possible Cause(s)***	***Corrective Action***
Motor doesn't run	1) Blown fuse or circuit breaker 2) Incorrect or no power 3) Speed pot set at zero 4) Worn motor brushes	1) Replace fuse or reset breaker 2) Install proper power service 3) Rotate Speed pot CW to start 4) Replace motor brushes
Armature output voltage cannot be adjusted; output is a constant DC level ***Motor stalls, or runs very slowly with speed control set fully CW***	1) No motor or load connected 2) Speed pot low connection open 3) Low voltage 4) Overload condition 5) Worn motor brushes 6) Max speed set incorrectly	1) Ensure that motor or load is connected to armature terminals 2) Ensure that Speed pot Low wire is connected 3) Ensure that VAC is above 100VAC 4) Reduce load or increase motor size Current Limit setting 5) Replace brushes 6) Consult "Trim Pot Adjustments" section
Motor "hunts"	1) Motor current less than 150 mA 2) Too much IR Comp 3) Motor is in Current Limit 4) Motor speed is above rated speed 5) Max set too high	1) Motor current must be greater than 150 mA (DC) 2) Consult "Trim Pot Adjustments" section 3) Consult "Trim Pot Adjustments" section 4) Reduce speed 5) Consult "Trim Pot Adjustments" section
Repeated fuse blowing	1) Low voltage 2) Overload condition 3) Worn motor brushes 4) Defective motor bearings 5) Defective electrical components	1) Ensure that VAC is above 100 VAC for 120V systems and above 200V for 240V systems 2) Reduce load – disconnect to test 3) Replace brushes 4) Replace bearings 5) Contact AutomationDirect "Product Returns" for replacement

MV15 Series (LED Voltage Meters)

FEATURES

- Measurement Function
  - **1 Ø Voltage (True RMS)**
- 3 Digit LED Display



E253771



CAT. NO.	MV15-110V-CU	~~MV15-DC-20V-110V-CU~~ MV15-DC-200V-110V-CU
Display		
Display Type	7 segment LED Display	7 segment LED Display
Digits	3 digits	3 digits
Bargraph	–	–
Display Range	0 - 516V	0 - 516V
Supply Specification	110 VAC +/-20% (60Hz)	110 VAC +/-20% (60Hz)
Input Specification		
Electrical Wire System	1 Phase (2 wire)	1 Phase (2 wire)
Input Voltage Range	50 ~ 516 VAC	**0 ~ 20 VDC (MV15-20V) 0 ~ 200 VDC (MV15-200V)**
Frequency	50/60 Hz	50/60 Hz
Input Impedance	1 MΩ (+/-5%)	1 MΩ (+/-5%)
Parameter Resolution		
Voltage	1V	1V
Sample Rate	3 samples / sec.	3 samples / sec.
Accuracy Class		
Voltage	+/- 0.5% of Full-Scale Value	+/- 0.5% of Full-Scale Value
Output Specifications		
Pulse Output	–	–
Communication	–	–
Programmable Parameters	–	–
Environmental Specifications		
Temperature	Operating: -10°C~55°C, Storage: -20°C~ 75°C	Operating: -10°C~55°C, Storage: -20°C~ 75°C
Humidity	Up to 85% RH	Up to 85% RH
Protection Level	IP65 for Faceplate	IP65 for Faceplate
Physical Specifications		
Size	1/8 DIN, 48 mmx 96 mm	1/8 DIN, 48 mmx 96 mm
Weight	0.38 lbs (170g)	0.38 lbs (170g)
Terminal Size Acceptability and Torque	20-14 AWG (0.5 - 2.5mm²), 6-7 lb-in. (0.68 - 0.79Nm)	20-14 AWG (0.5 - 2.5mm²), 6-7 lb-in. (0.68 - 0.79Nm)

DIMENSIONS

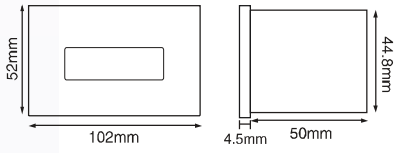

MV15 Series

TERMINAL CONNECTIONS



MV15-110V-CU (AC Type)



MV15-DC-20V-110V-CU (DC Type)
MV15-DC-200V-110V-CU (DC Type)

230 VAC versions also available, please consult Altech.

Altech Corp.® • 35 Royal Road • Flemington, NJ 08822-6000 • Phone (908)806-9400 • FAX (908)806-9490 • www.altechcorp.com

Series DX Differential Pressure Switch

Specifications - Installation and Operating Instructions



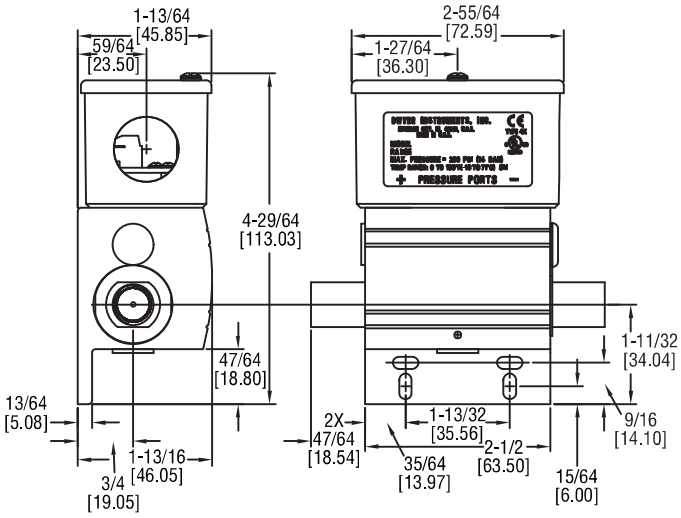

The Series DX is a pressure switch that makes a contact output based on the differential pressure between two pressure sources. Unit incorporates a SPDT snap switch in a weatherproof, type 4X enclosure. Series DX features low differential pressure set points with high single pressure limit.

OPERATING PRINCIPLE

The DX uses opposing diaphragms to sense the high and low pressure. A pivot mechanism transfers the difference of the two pressures to the switch.

Example	DX	W	1	1	153	2	M	DXW-11-153-2-M
Series	DX							Differential Pressure Switch
Construction		W						Weatherproof
Wetted Materials			1					Brass/Fluoroelastomer
Process Connection				1				1/4″ NPT
Circuit Options					153			SPDT
Range						1		2.5 to 10 psi
						2		10 to 25 psi
						3		25 to 50 psi
						4		50 to 75 psi
Options							SST	Stainless Steel tag
							PRESET	Preset set point

SPECIFICATIONS

Service: Compatible gases and liquids.
Wetted Materials: Connection: Brass; Diaphragm: Fluoroelastomer.
Temperature Limits: 30 to 140°F (-1 to 60°C).
Pressure Limits: 200 psig (13.8 bar).
Enclosure Rating: Weatherproof UL type 4X (IP65).
Repeatability: ±2% of full range.
Switch Type: SPDT snap switch.
Electrical Rating: 5A @ 125/250 VAC (~), 5A res. @ 30 VDC (⎓).
Electrical Connection: Removable terminal block.
Conduit Connection: 0.871″ diameter hole for 1/2″ conduit fitting.
Process Connection: 1/4″ NPT female. Continuous single side only pressure should not exceed 1.25 x full differential range.
Mounting Orientation: Ports on horizontal plane, ±10°.
Set Point Adjustment: External screw.
Housing Materials: Body: Aluminum; Housing: Polycarbonate; Cover: 300 SS.
Vibration and Shock: Set point repeats after 2.5 Gs, 5 to 500 Hz. Set point repeats after a 15 Gs, 10 millisecond duration.
Altitude Limit: 6560 ft (2000 m).
Humidity Limit: 80% (non-condensing).
Pollution Degree: 2.
Environment: Intended for indoor and outdoor use.
Weight: 1 lb 3 oz (0.54 kg).
Agency Approvals: CE, UL.

Adjustable Range psid (bar)	Fixed Deadband psid (bar)	
	At Low Set Point	At High Set Point
2.5 to 10 (0.17 to 0.69)	1.5 (0.10)	2.5 (0.17)
10 to 25 (0.69 to 1.72)	2.5 (0.17)	3.5 (0.24)
25 to 50 (1.72 to 3.45)	3.5 (0.24)	6.0 (0.41)
50 to 75 (3.46 to 5.17)	6.0 (0.41)	8.0 (0.55)

Approximate Deadbands

DWYER INSTRUMENTS, INC.
P.O. BOX 373 • MICHIGAN CITY, INDIANA 46361, U.S.A.
Phone: 219/879-8000
Fax: 219/872-9057
www.dwyer-inst.com
e-mail: info@dwyer-inst.com

UNPACKING

Remove the DX from the shipping carton and inspect for damage. If damage is found, notify the carrier immediately.

INSTALLATION

⚠CAUTION Insure that the process fluid is compatible with the wetted materials.

⚠CAUTION Do not exceed the maximum device ratings.

⚠CAUTION Insure that the system is not pressurized before installing or removing this device or other objects from the system.

The DX is to be mounted with the pressure connections horizontal ±10°.

For pipe mounting, mount the unit from the pressure connections to the pipe. Make sure the piping is properly supported to handle the weight of the pressure switch.

For surface mounting, mount the unit to the selected surface using the mounting ear holes provided using two #6 or #8 screws. See the Figure 2 for mounting hole spacing.
Make sure that connections are connected to the proper port. The high pressure

the unit. Piping or tubing should always be turned into the pressure port, do not turn the pressure switch. When installing the piping or tubing into the switch always use a wrench on the flats of the pressure connection. Use pipe thread sealant tape or other suitable pipe joint compound when making the pressure connection.

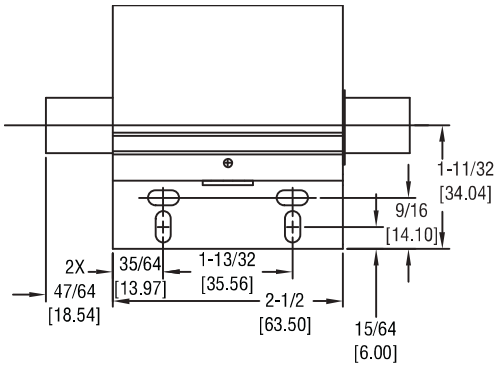

Figure 2: Mounting Hole Dimensions

ELECTRICAL CONNECTION

A SPDT snap action switch is provided. The output logic is shown in Table 1.

Condition	NO	NC
Differential Pressure Above Set Point	Closed	Open
Differential Pressure Below Set Point	Open	Closed

Table 1: Switch Action

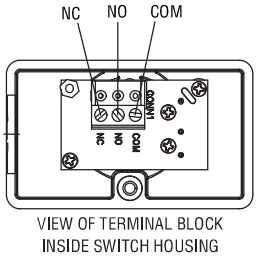

Figure 2: Wiring Diagram

⚠WARNING Power must be off while wiring connections are being made.

NOTICE Installation must be made in accordance with local codes and regulations.

Electrical connections are made to the removable terminal block inside the enclosure. Remove the terminal block from the circuit board for wiring if desired. Feed stripped and tinned leads through the conduit opening and connect them as shown in Figure 2. 250V @ 60C 14 to 24 AWG / 2.5 to .25 mm² wiring with PVC or equivalent insulation with 94-V0 or FV-0 flammability rating is recommended for the switch. Replace terminal block after wiring. The DX provides one 0.871″ diameter hole for 1/2″ conduit fitting. The conduit connections must be made such that condensation is not allowed to enter the sensor housing. If necessary install a conduit breather drain in a separate conduit body to prevent buildup of moisture.

NOTICE For weatherproof applications, install directly to conduit or use the optional cable gland accessory.

SETPOINT ADJUSTMENT

The set point is adjusted with a standard slotted head screw driver.

1) Remove rubber plug over set point adjustment screw located on the right side of the unit (with the label side facing you).
2) Insert the screw driver to turn the set point adjustment.
3) A clockwise rotation is an increase in differential pressure set point and a counterclockwise rotation is a decrease in differential pressure set point. (The set point screw can be turned too far as to fall out; do not turn the screw to the point that there are no longer any female threads visible in the switch body).
4) Using a pressure source and pressure gauge adjust the set point screw to the set point desired while monitoring the contact output.
5) Once desired set point is achieved replace set point adjustment cover.

NOTICE Design a fail-safe system that takes into consideration the possibility of switch failure, power failure, and operator error.

Explanation of Symbols:

Symbol	Publication	Description
⎓	IEC 50417 - 5031	Direct current
~	IEC 50417 - 5032	Alternating current
⏚	IEC 50417 - 5019	Protective conductor terminal

MAINTENANCE & REPAIR

Inspect and clean switch with water or damp cloth as needed. Disassembly or modifications made by the user will void the warranty and could impair the continued safety of the product. If repair is required obtain a Return Goods Authorization (RGA) number and send the unit, freight prepaid, to the address below. Please include a detailed description of the problem and conditions under which the problem was encountered.

Dwyer Instruments, Inc.
Attn: Repair Department
102 Indiana Hwy 212
Michigan City, IN 46360

©Copyright 2010 Dwyer Instruments, Inc.
Printed in U.S.A. 10/10 FR# M3-443822-00

DWYER INSTRUMENTS, INC.
P.O. BOX 373 • MICHIGAN CITY, INDIANA 46361, U.S.A.
Phone: 219/879-8000
Fax: 219/872-9057
www.dwyer-inst.com
e-mail: info@dwyer-inst.com

GRANZOW® INC.

Series W
SOLENOID VALVE

Model
W4B11-000

2-way, internally piloted, normally closed solenoid valve

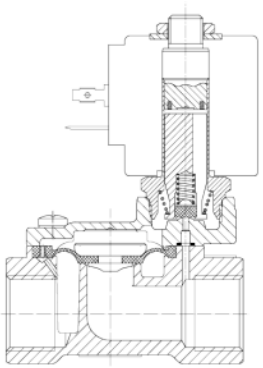



1/2"	1/2"	4.90	120 VAC	8 watts	3–232 psi
Pipe Size (Inch)	Orifice Size (Inch)	Flow Factor (CV)	Voltage (AC)	Wattage (W)	Pressure Range (PSI)

NBR	14°–195° F	Conduit DIN	Air, Inert gas, Water
Sealing Material	Temperature Range	Connector Supplied	Medium Examples

Materials of Construction

Body:	**Brass**
Armature Tube:	**Stainless Steel 300**
Fixed Core:	**Stainless Steel 400**
Plunger:	**Stainless Steel 400**
Spring:	**Stainless Steel 300**
Shading Ring:	**Copper**
Orifice:	**Brass**
Pipe Threading:	**NPT**

Electrical Specifications

Rating:	**NEMA 4**
Inrush VA:	**25.0**
Holding VA:	**14.5**

Spare Part Numbers

Armature Tube:	**AT-A001**
Repair Kit:	**RK-W001**
Coil/Connector:	**C-B11**

Valve Dimensions

Valve Width **(A)**:	**1 9/16"**
Valve Length **(B)**:	**2 19/32"**
Valve Height **(C)**:	**3 13/16"**
Coil Width **(D)**:	**1 3/16"**
Coil Length **(E)**:	**1 21/32"**
Coil Length **(F)**:	**2 1/8"**

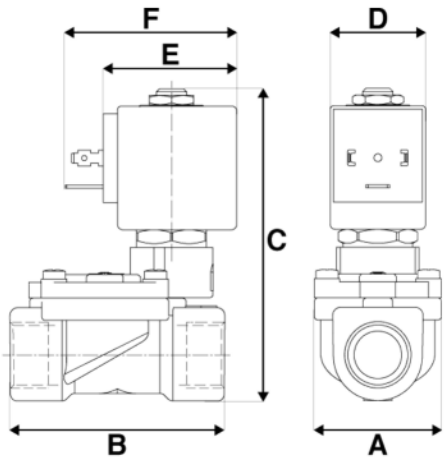

Note: Valve is pictured above with a sample coil, which may not reflect the exact specifications of this particular part number.

Granzow, Inc.• 2300 Crownpoint Executive Drive, Charlotte, NC 28227-6702 • Phone (704) 845-2300 • Fax (704) 845-2301

©2018 Granzow, Inc. All rights reserved. Information within this document is subject to change, and may be modified at any time, without notice.

Flo-Rite™ Series FR Flowmeters

DESCRIPTION

Series FR2000/FR4000/FR4500/FR5000 is a standard precision-machined acrylic flow meter for liquids or gases, has direct reading air or water scales and is available in either English or Metric scales.

The FR2000/FR4000/FR4500 flowmeters can be configured with a control valve on the inlet or no valve at all; fittings and valve can be specified in either brass or stainless steel; O-rings can be provided with Buna-N, Viton® or other optional elastomers.

FR5000 flowmeters have 1" FNPT PVC fittings with either an inline (FR5000-I) or panel mount (FR5000-S) configuration. The panel mount version is available with an integral valve on the inlet (FR5000-V) or no valve at all.

FEATURES

- Easy-to-read English or Metric Scales
- Water ranges from 4 CCM to 20 GPM
- Air ranges from 40 CCM to 4000 LPM
- Threaded brass inserts for quick installation
- Easy disassembly and assembly for maintenance
- Durable one-piece clear acrylic construction
- Stable, easy-to-read float
- Superior quality

APPLICATIONS

- Air sampling equipment aquaculture
- Desalinization equipment
- Gas analyzers
- Medical systems
- Photoprocessing equipment
- Water treatment and distribution systems

SPECIFICATIONS

Accuracy	Model FR2000 ±5% Full Scale Model FR4000 & FR4500 ±3% Full Scale Model FR5000 ±2% Full Scale
Floats	Black Glass, Stainless Steel, Delrin®
Body	Clear Acrylic
Seals	Buna-N O-Rings with Brass Fittings Viton® O-Rings with Stainless Steel Fittings
Pressure	100 PSIG Max
Temperature	150°F/65°C Max
Fittings	Brass, Stainless Steel or FNPT Pipe Connections
Valves (optional)	Model FR2000/4000/4500 Brass or Stainless Steel Model FR5000 Integral Valve on "V" Models Inline Gate Valve is available for the "S" & "I"

SERIES FR2000/FR4000/FR4500 FLOWMETER

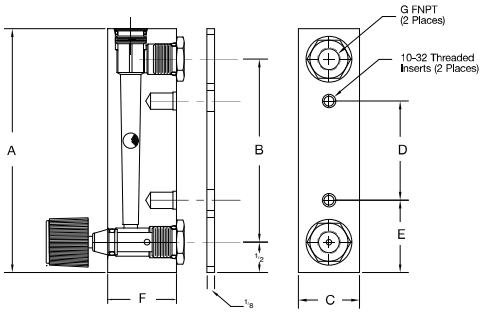

DIMENSIONS inches/millimeters (mm)

MODEL	A	B	C	D	E	F	G
FR2000	4" (102)	3" (76.2)	1" (25.4)	1 5/8" (41.3)	1 3/16" (30.2)	1 1/8" (28.6)	1/8"
FR4000	6 1/2" (165)	5 1/2" (140)	1 3/8" (34.9)	3 1/2" (88.9)	1 1/2" (38.1)	1 1/8" (28.6)	1/8"
FR4500*	6 5/8" (168)	5 1/2" (140)	1 1/8" (28.6)	3 1/2" (88.9)	1 1/2" (38.1)	1 3/8" (34.9)	1/4"

* Does not include 1/8" back plate

SERIES FR5000-S OR V

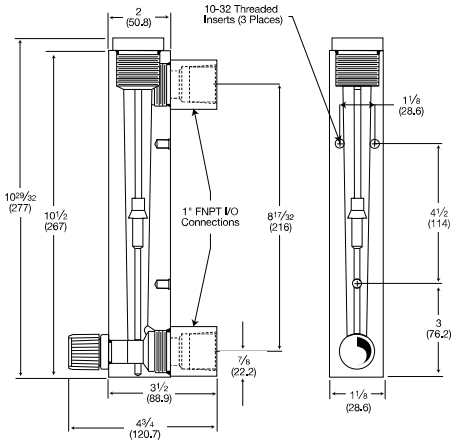

SERIES FR5000-I

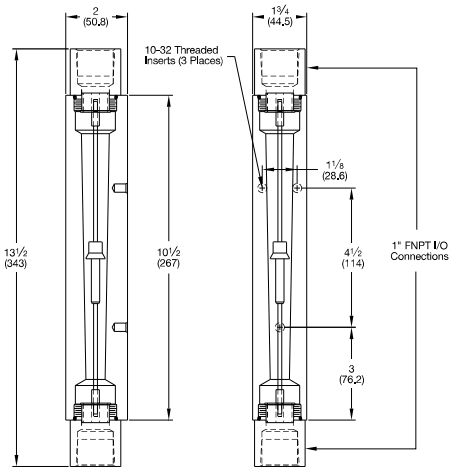

KEY INSTRUMENTS • 250 Andrews Road • Trevose, PA 19053 • 800.356.7483 • 215.357.0893 • Fax: 215.357.9239
www.KeyInstruments.com • sales@keyinstruments.com

Flo-Rite™ Series FR Flowmeters

SERIES FR2000 FLOW RATES TABLE A **

Range SCFH of Air	Model Code	Range LPM of Air	Model Code
.1-1	2A00	.04-.5	2A12
.2-2	2A01	.1-1	2A13
.4-5	2A02	.2-2.5	2A29
1-10	2A03	.4-5	2A14
2-20	2A04	1-10	2A15
3-30	2A05	2-25	2A16
4-50	2A06	4-50	2A17
10-100	2A07	10-100	2A18
20-200	2A08	**GPH of Water**	
CCM of Water		.2-2	2L28
5-50	2L09	.4-5	2L19
10-100	2L10	1-10	2L20
20-240	2L11	2-20	2L21
		4-40	2L22

SERIES FR4000 FLOW RATES TABLE B **

Range SCFH of Air	Model Code	Range CCM of Water	Model Code
.4-5	4A30	4-50	4L38
1-10	4A31	10-120	4L56
2-20	4A32	25-225	4L51
4-40	4A33	40-400	4L50
10-100	4A34	40-660	4L52
14-150	4A35	100-1500	4L53
20-200	4A36	200-3000	4L54
CCM of Air		300-3700	4L55
100-1000	4A39*	**GPH of Water**	
LPM of Air		1-10	4L45
.4-5	4A40	2-25	4L48
1-10	4A41	4-50	4L49
2-20	4A42	6-60	4L46
3-30	4A43	**SCFM of Air**	
4-50	4A44	.3-3	4A37
10-100	4A47		

* Uses Delrin® Float
** Available with millimeter scales. Flow curves for a variety of gases and liquids for specific applications may also be ordered.

SERIES FR4500 FLOW RATES TABLE C

Range SCFM of Air	Model Code	Range GPM of Water	Model Code
.5-5	4A67	.2-2.5	4L64
1-10	4A65	.4-5	4L66
*2-20	4A68	**LPM of Water**	
LPM of Air		.8-9	4L69
14-140	4A72	1.5-20	4L71
30-280	4A70	Dual scales: SCFM/SCFH, GPM/GPH, and LPM/LPH	
*60-560	4A73		

* Not Available with Valves

SERIES FR5000-S OR V FLOW RATES TABLE D

Range SCFM of Air	Model Code	Range GPM of Water	Model Code
3-25	5A50	.4-5	5L56
4-50	5A51	1-10	5L57
10-100	5A52	2-20	5L58
LPM of Air		**LPM of Water**	
100-700	5A53	1-19	5L59
100-1400	5A54	4-36	5L60
400-3400	5A55	5-75	5L61

SERIES FR5000-I FLOW RATES TABLE E

Range SCFM of Air	Model Code	Range GPM of Water	Model Code
3-25	5A50	.4-5	5L56
4-50	5A51	1-10	5L57
10-100	5A52	2-20	5L58
LPM of Air		**LPM of Water**	
100-700	5A53	1-19	5L59
100-1400	5A54	4-36	5L60
400-4000	5A55	5-75	5L61

Periodically, product revisions occur. Please consult the factory for the latest specifications.

ORDERING INFORMATION 2 INCH / 4 INCH SCALE

Catalog Number Ordering Example: **FR2A04BVBN**

EXAMPLE:	FR	2A04	B	V	BN

Acrylic Flowmeter
Product Code

Model Number
From Tables A, B & C

Fittings
B = Brass (std), S = Stainless Steel

Valve
N = No Valve, V = Standard Inlet Valve

Seals
BN = Buna-N (std with brass fittings),
VT = Viton® (std with stainless steel),
S = Special (specify compound)

Catalog Number Ordering Example: **FR4A30SNVT**

EXAMPLE:	FR	4A30	S	N	VT

Acrylic Flowmeter
Product Code

Model Number
From Tables A, B & C

Fittings
B = Brass (std), S = Stainless Steel

Valve
N = No Valve V = Standard Inlet Valve

Seals
BN = Buna-N (std with brass fittings),
VT = Viton® (std with stainless steel),
S = Special (specify compound)

KEY INSTRUMENTS • 250 Andrews Road • Trevose, PA 19053 • 800.356.7483 • 215.357.0893 • Fax: 215.357.9239
www.KeyInstruments.com • sales@keyinstruments.com

ECX Series 22 mm Plastic Indicator Lights

Plastic incandescent indicator lights



ECX1051-24

These indicators have a key to prevent rotation when mounted.

12 models available:

- Available in six colors
- 24V and 120V models
- Incandescent bulbs included
- Accepts LED replacement lamps
- Monoblock design for easy mounting
- Side wire entry with back screw terminals for easy wiring and maintenance
- IP20 rated before installation
- IP65 rated after installation

Note: When using LED replacement lamps with these indicators, it may be necessary to remove the frosted diffuser for enhanced illumination.

Part Number	Lamp Color	Price	Description	Replacement Incandescent Bulb	Replacement Lamp
ECX1051-24	Red	<--->	22 mm monoblock incandescent indicator light, 24VDC/VAC	ECX1902-5 5/pk 80mA	ECX1911-2 2/pk 26mA
ECX1051-120	Red	<--->	22 mm monoblock incandescent indicator light, 120VDC/VAC	ECX1904-5 5/pk 20mA	ECX1921-2 2/pk 5mA
ECX1052-24	Green	<--->	22 mm monoblock incandescent indicator light, 24VDC/VAC	ECX1902-5 5/pk 80mA	ECX1912-2 2/pk 26mA
ECX1052-120	Green	<--->	22 mm monoblock incandescent indicator light, 120VDC/VAC	ECX1904-5 5/pk 20mA	ECX1922-2 2/pk 5mA
ECX1053-24	Yellow	<--->	22 mm monoblock incandescent indicator light, 24VDC/VAC	ECX1902-5 5/pk 80mA	ECX1913-2 2/pk 26mA
ECX1053-120	Yellow	<--->	22 mm monoblock incandescent indicator light, 120VDC/VAC	ECX1904-5 5/pk 20mA	ECX1923-2 2/pk 5mA
ECX1054-24	Blue	<--->	22 mm monoblock incandescent indicator light, 24VDC/VAC	ECX1902-5 5/pk 80mA	ECX1914-2 2/pk 26mA
ECX1054-120	Blue	<--->	22 mm monoblock incandescent indicator light, 120VDC/VAC	ECX1904-5 5/pk 20mA	ECX1924-2 2/pk 5mA
ECX1055-24	Clear	<--->	22 mm monoblock incandescent indicator light, 24VDC/VAC	ECX1902-5 5/pk 80mA	ECX1915-2 2/pk 26mA
ECX1055-120	Clear	<--->	22 mm monoblock incandescent indicator light, 120VDC/VAC	ECX1904-5 5/pk 20mA	ECX1925-2 2/pk 5mA
ECX1056-24	White	<--->	22 mm monoblock incandescent indicator light, 24VDC/VAC	ECX1902-5 5/pk 80mA	ECX1915-2 2/pk 26mA
ECX1056-120	White	<--->	22 mm monoblock incandescent indicator light, 120VDC/VAC	ECX1904-5 5/pk 20mA	ECX1925-2 2/pk 5mA

Dimensions: mm [inches]

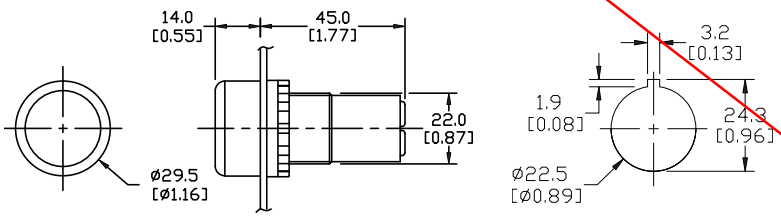

Plastic LED indicator lights



10 models available:

- Available in five colors
- 24V and 120V models
- Non-replaceable LEDs
- Side wire entry with back screw terminals for easy wiring and maintenance
- IP20 rated before installation
- IP65 rated after installation
- 12 mA @ 120V, 65 mA @ 24V

Part Number	Lamp Color	Price	Description
ECX2051-24L	Red	<--->	22 mm non-metal monoblock LED indicator light, 24VDC/VAC
ECX2051-127L	Red	<--->	22 mm non-metal monoblock LED indicator light, 120VDC/VAC
ECX2052-24L	Green	<--->	22 mm non-metal monoblock LED indicator light, 24VDC/VAC
ECX2052-127L	Green	<--->	22 mm non-metal monoblock LED indicator light, 120VDC/VAC
ECX2053-24L	Yellow	<--->	22 mm non-metal monoblock LED indicator light, 24VDC/VAC
ECX2053-127L	Yellow	<--->	22 mm non-metal monoblock LED indicator light, 120VDC/VAC
ECX2054-24L	Blue	<--->	22 mm non-metal monoblock LED indicator light, 24VDC/VAC
ECX2054-127L	Blue	<--->	22 mm non-metal monoblock LED indicator light, 120VDC/VAC
ECX2055-24L	Clear	<--->	22 mm non-metal monoblock LED indicator light, 24VDC/VAC
ECX2055-127L	Clear	<--->	22 mm non-metal monoblock LED indicator light, 120VDC/VAC

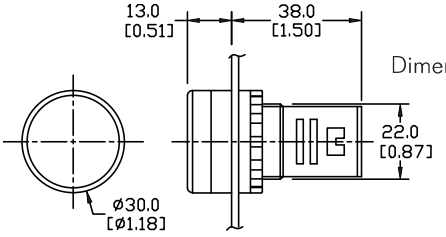

Dimensions: mm [inches]

For accessories, see 22 mm Plastic Pilot Device Accessories in this section.

Octal Base Plug-In General-Purpose Relay — MKS Series

RoHS



Reliable, high quality, long life. Silver contacts rated at 10 amps. UL, CSA rated. Built-in indicator standard. **Options Include:** LED indicator, diode or varistor suppression and reverse polarity coil connections. All MKS models with "I" also come with push-to-test button.

DPDT, 10 Amp

Stock No.	Mfr.'s Type	Coil Rating			Features	EACH
		Voltage (V)	Curr. (mA)	Res. (Ohms)		
70178929	MKS2PI DC12	12 VDC	126.0	95.0	Button	12.44
70178930	MKS2PI DC24	24 VDC	56.0	430.0	Button	11.66
70178934	MKS2PIN DC24	24 VDC	56.0	430.0	Button/LED	15.10
70178935	MKS2PN DC24	24 VDC	56.0	430.0	LED	15.10
70178931	MKS2PI DC48	48 VDC	29.5	1630.0	Button	12.49
70178928	MKS2PI DC110	110 VDC	15.1	7300.0	Button	12.49
70178924	MKS2PI AC12	12 VAC	180.0	16.3	Button	12.44
70178926	MKS2PI AC24	24 VAC	88.0	68.0	Button	12.44
70178933	MKS2PIN AC24	24 VAC	88.0	68.0	Button/LED	15.10
70178925	MKS2PI AC120	120 VAC	18.0	1578.0	Button	13.35
70178932	MKS2PIN AC120	120 VAC	18.0	1578.0	Button/LED	15.37
70178927	MKS2PI AC240	240 VAC	9.2	6737.0	Button	14.22

3PDT, 10 Amp

70178948	MKS3PI DC12	12 VDC	126.0	95.0	Button	15.09
70178946	MKS3PI-5 DC12	12 VDC	126.0	95.0	Button	14.21
70178947	MKS3PI-5 DC24	24 VDC	56.0	430.0	Button	14.21
70178950	MKS3PIN-5 DC24	24 VDC	56.0	430.0	Button/LED	16.86
70178945	MKS3PI-5 DC110	110 VDC	15.1	7300.0	Button	15.99
70178943	MKS3PI-5 AC24	24 VAC	88.0	68.0	Button	14.21
70178942	MKS3PI-5 AC120	120 VAC	18.0	1578.0	Button	15.09
70178949	MKS3PIN-5 AC120	120 VAC	18.0	1578.0	Button/LED	14.99
70178944	MKS3PI-5 AC240	240 VAC	9.2	6737.0	Button	15.99

Quality Sockets and Clips for Relays

RoHS





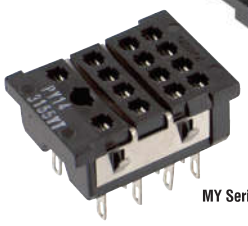

Stock No.	Mfr.'s Type	For Relay Series	Application	EACH		
				1-49	50-99	100-249
70179013	PF083A-E	MK 2-Pole	Surface- or Rail-Mount	3.72	3.50	3.33
70179014	PF113A-E	MK 3-Pole	Surface- or Rail-Mount	5.27	4.95	4.72
70179022	PL08	MK 2-Pole	Solder	1.87	1.76	1.67
70179023	PL11	MK 3-Pole	Solder	2.26	2.13	2.02
70179024	PLE08-0	MK 2-Pole	PCB Terminal	2.87	2.72	2.58
70179025	PT08	LY 1- and 2-Pole	Solder	1.75	1.65	1.56
70179026	PT08-0	LY 1- and 2-Pole	PCB Terminal	1.44	1.35	1.31
70179027	PT14-0	LY 4-Pole	PCB Terminal	2.28	2.16	2.04
70179028	PTF08A-E	LY 1- and 2-Pole	Surface- or Rail-Mount	4.19	3.93	3.75
70179029	PTF11A	LY 3-Pole	Surface- or Rail-Mount	6.69	6.32	6.00
70179033	PTF14A-E	LY 4-Pole	Surface- or Rail-Mount	6.01	5.64	5.38
70179032	PTF14A-E	LY 4-Pole	Surface- or Rail-Mount	10.32	9.79	9.35
70179048	PYF14A-N	MY 4-Pole	Surface- or Rail-Mount	6.68	6.32	5.99
70179037	PY08-02	MY 2-Pole	PCB Terminal	1.24	1.17	1.11
70179038	PY14	MY 4-Pole	Solder	1.71	1.61	1.52
70179039	PY14-02	MY 4-Pole	PCB Terminal	1.71	1.61	1.52
70179042	PYF08A-E	MY 2-Pole	Surface- or Rail-Mount	4.90	4.61	4.35
70179047	PYF14A-E	MY 4-Pole	Surface- or Rail-Mount	6.54	6.12	5.86
70179049	PYF14S	MY 4-Pole	Screwless Socket	9.72	9.12	8.71

Accessories

Stock No.	Mfr.'s Type	Description	Used With	EACH		
				1-24	25-49	50-99
70179016	PFP-100N	DIN Rail, 1 m	All Relay Sockets	6.30	5.93	5.60
70179015	PFC-A1	Hold-Down clip	PF083A-E, PF113A-E	.76	.70	.66
70179040	PYC-A1	Hold-Down Clip	PTF08A-E, PTF11A, PTF14A-E, PYF08A-E, PYF08A-N, PYF14A-E, PYF14A-N	.22	.21	.20

Slim, Space-Saving Power Plug-In Relay — G2RS Series

RoHS



One and two pole plug-in relays. **Specifications. Contact Form:** G2R-1-S — SPDT; G2R-2-S — DPDT. **Contact Resistance:** 100 mΩ. **Contact Ratings:** G2R-1-S — 10 A @ 250 VAC; G2R-2-S — 5 A @ 250 VAC (resistive). **Operate Time:** 15 ms max. **Release Time:** 1 pole = AC — 10 ms max.; DC — 5 ms max.; 2 pole = AC — 15 ms max.; DC — 10 ms max.; Diode version = 20 ms max. Available options include LED indicators, push-to-test button, and diode suppression (DC coils). Other coil voltages available.

General-Purpose Relays

Stock No.	Mfr.'s Type	Contact Form	Coil Ratings				EACH		
			Voltage	Current (mA)	Res. (Ohms)	Power Consump.	1-24	25-49	50-99
70178581	G2R-1-S DC6(S)	SPDT	6 VDC	88.2	68	0.530 W	4.24	3.92	3.60
70178579	G2R-1-S-DC12(S)	SPDT	12 VDC	43.2	278	0.530 W	4.72	4.43	4.23
70178580	G2R-1-S-DC24(S)	SPDT	24 VDC	21.6	1113	0.530 W	3.80	3.63	3.48
70178578	G2R-1-S-AC24(S)	SPDT	24 VAC	37.4	253	0.900 VA	5.92	5.57	5.30
70178577	G2R-1-S-AC120(S)	SPDT	120 VAC	7.5	7286	0.900 VA	6.94	6.50	6.21
70179136	G2R-2-S-DC12(S)	DPDT	12 VDC	43.2	278	0.530 W	4.88	4.66	4.39
70178598	G2R-2-S-DC24(S)	DPDT	24 VDC	21.6	1113	0.530 W	5.40	5.04	4.83
~~70178596~~	~~G2R-2-S-AC24(S)~~	~~DPDT~~	~~24 VAC~~	~~37.4~~	~~253~~	~~0.900 VA~~	~~7.51~~	~~7.04~~	~~6.72~~
70178595	G2R-2-S-AC120(S)	DPDT	120 VAC	7.5	7286	0.900 VA	7.40	7.06	6.65

Relays with Diode

70178582	G2R-1-SD DC24(S)	SPDT	24 VDC	21.8	1100	0.530 W	6.05	5.74	5.48
70178599	G2R-2-SD-DC24(S)	DPDT	24 VDC	21.6	1113	0.530 W	6.75	6.54	6.34

Relays with LED Indicator

70178586	G2R-1-SN-DC12(S)	SPDT	12 VDC	43.2	278	0.530 W	7.37	7.14	6.92
70178587	G2R-1-SN-DC24(S)	SPDT	24 VDC	21.6	1113	0.530 W	7.72	7.24	6.92
70178590	G2R-1-SNDI DC24(S)	SPDT	24 VDC	21.6	1113	0.530 W	10.10	9.60	8.54
70178585	G2R-1-SN AC24(S)	SPDT	24 VAC	37.4	253	0.900 VA	7.53	7.20	6.76
70178583	G2R-1-SN-AC110(S)	SPDT	110 VAC	8.2	5566	0.900 VA	9.54	8.95	8.56
70178584	G2R-1-SN-AC120(S)	SPDT	120 VAC	7.5	7286	0.900 VA	11.32	10.61	10.14
70178602	G2R-2-SN-DC24(S)	DPDT	24 VDC	21.6	1113	0.530 W	10.50	9.85	9.40
70178600	G2R-2-SN-AC120(S)	DPDT	120 VAC	7.5	7286	0.900 VA	10.95	10.27	9.80

Relays with LED Indicator and Diode

70178588	G2R-1-SND-DC12(S)	SPDT	12 VDC	43.2	278	0.530 W	11.14	10.42	9.96
70178589	G2R-1-SND-DC24(S)	SPDT	24 VDC	21.6	1113	0.530 W	8.74	8.32	7.52
70178603	G2R-2SND-DC12(S)	DPDT	12 VDC	43.2	278	0.530 W	10.36	10.05	9.73
70178604	G2R-2-SND-DC24(S)	DPDT	24 VDC	21.6	1113	0.530 W	12.39	11.63	11.11
70178605	G2R-2-SNI DC24(S)	DPDT	24 VDC	21.6	1113	0.530 W	8.40	7.93	7.52
70178601	G2R-2-SN AC24(S)	DPDT	24 VAC	37.4	253	0.900 VA	9.67	9.14	8.67

Accessories

Stock No.	Mfr.'s Type	Description	EACH
70179003	P2RF-05	Track (DIN) mounted socket for G2R-1-S, Solder Terminals	6.15
70179004	P2RF-05-E	Track (DIN) mounted socket for G2R-1-S, Screw Terminals	3.61
70179001	P2R-05P	PCB Back mount socket for G2R-1-S	1.60
70179006	P2RF-08	Track (DIN) mounted socket for G2R-2-S, Solder Terminals	7.39
70179007	P2RF-08-E	Track (DIN) mounted socket for G2R-2-S, Screw Terminals	6.38
70179002	P2R-08P	PCB Back mount socket for G2R-2-S	1.78

Octal Base Dual Coil Magnetic Latching Relay — MK2KP Series

RoHS



Reliable, high quality, long life. Silver contacts rated at 10 amps. UL, CSA rated. Built-in indicator standard. **Options Include:** LED indicator, suppression diode or varistor.

Stock No.	Mfr.'s Type	Contact Form	Coil Rating			EACH		
			Voltage (V)	Curr. (mA)	Res. (Ohms)	1-24	25-49	50-99
70178907	MK2KP-UA-AC24	DPDT-S*	24 VAC	66.0	105.0	43.97	41.56	39.40
		DPDT-R*		10.8	965.0			
70178906	MK2KP-UA-AC120	DPDT-S*	120 VAC	19.0	1900.0	39.90	37.41	35.72
		DPDT-R*		4.2	12400.0			
70178908	MK2KP-UA-DC12	DPDT-S*	12 VDC	205.0	52.0	38.45	37.07	35.14
		DPDT-R*		50.0	240.0			
70178909	MK2KP-UA-DC24	DPDT-S*	24 VDC	110.0	210.0	47.03	43.41	40.31
		DPDT-R*		22.8	1050.0			

*S = Set coil, R = Reset coil DPDT — 11-pin octal socket.

GCX Series 22 mm Plastic Pilot Devices Specifications

Assembly information

These pushbuttons and indicator lights are supplied with the appropriate contact blocks, unless otherwise indicated. Use these drawings as a guide to make sure there is adequate clearance behind the panel.

Pushbuttons and selector switches

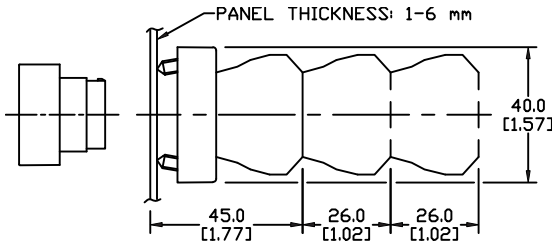

Dimensions: mm [inches]

Illuminated pushbuttons and selector switches/indicator lights

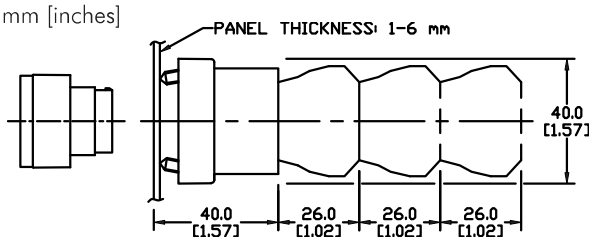

Mounting

Dimensions: mm [inches]

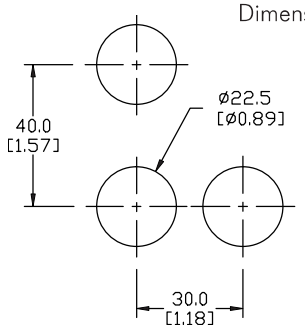

This layout is suitable if all switches are 230V or less and the same polarity.

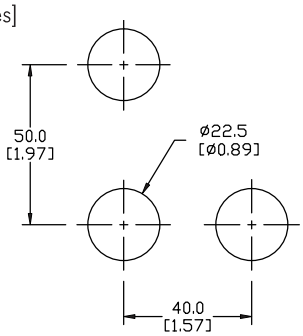

This layout is suitable if all switches are 400V or less and different polarity.



NOTE: Contact blocks can be arranged up to three deep by two wide.

Typical Wiring

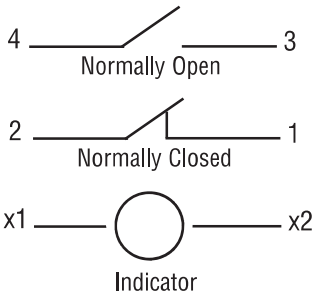

Specifications

These specifications apply to all the GCX and ECX 22 mm plastic pushbuttons and switches.

Physical Specifications	
Standards Reference	CEI EN 60947-5-1, CSA C22-2 n.14
Approvals	CSA, IMQ (where specified), UL File E189258
Enclosure Material	Fiberglass reinforced thermoplastic
Contacts Material	Silver
Protection Degree	IP 40 for GCX3151-24, GCX3151-120, GCX3153-24 and GCX3153-120. IP 65 for all others.(See Appendix of this catalog for explanation of IP ratings according to IEC 144 CEI 70-1.)
Electric Shock Protection	IEC 536, Class II
Temperature Ratings	Storage: -40° -to 80°C (-40° to 176° F) Operating: -25° to +70°C (-13° to 158° F)
Working Positions	All working positions are allowed
Mechanical Life	Pushbuttons, selector switches, joy stick switches: 1,000,000 operations Emergency mushrooms and push-push pushbuttons: 300,000 operations
Positive Opening Operation	(according to IEC 947-5-1) All functions incorporating an NC contact are positive opening operation

Electrical Specifications	
Rated Thermal Current (contact block)	A300, Q300 (Refer to E22 Series mounting/contact rating section for details)
Rated Insulation Voltage	Ui 660V according to CEI EN 60947-5-1, 300V according to CSA C22-2 n.14 and UL 508
Dielectric Strength	3kV (1 second)
Insulation Resistance	2MΩ min. (500VDC)
Initial Contact Resistance	≤25mΩ
Short-Circuit Protection*	Cartridge fuses gI 10 A-500V 10, 3x38I1 100 KA
Terminal Markings	According to CENELEC EN 50013
Connections	Single screw with non-loosening plate clamp,14AWG max., Tighten to 0.8Nm max
Contacts Operation	Self-cleaning types EN01 (N.C.) EN 10 (N.O.) slow action, positive opening
Operation Frequency	3600 operations per hour max.
Utilization Category	**AC15** (Control of AC electromagnetic loads) 24 volts AC at 10 amps 130 volts AC at 6.5 amps **DC13** (Control of DC electromagnetic loads) 24 volts DC at 1.5 amps 110 volts DC at 0.5 amps

Note: Recommended, not supplied

GCX Series 22 mm Plastic Key Switches and Selector Switches

Key-operated selector switches

Part Number	Price	Description
GCX3420	<—>	22 mm plastic selector switch, key-operated, **two-position maintained**, key can be removed in all positions. **One N.O.** contact block. Replacement keys available
GCX3430	<—>	22 mm plastic selector switch, key-operated, **two-position spring-return from right.** **One N.O.** contact block. Replacement keys available
GCX3470-22	<—>	22 mm plastic selector switch, key-operated, **three-position maintained**, key can be removed in all positions. **Two N.O.** and **two N.C.** contact blocks. Replacement keys available



Note: Keyed switches come with two keys. All plastic 22 mm keyed switches are keyed the same. Replacement keys are available. Order part no. ECX1067-2 (pkg. of 2). Keys for plastic 22 mm keyed switches are not compatible with Cutler-Hammer key switches.



Note: When using switches having two-deep contact blocks (such as, Model GCX3470-22) with the 22 mm plastic enclosures, be sure to use enclosures that are 74 mm deep. 51 mm-deep enclosures are too shallow and the switch body will not fit.



GCX3420 (2-position maintained)
- Keyed switches come with two keys.

Dimensions: mm [inches]

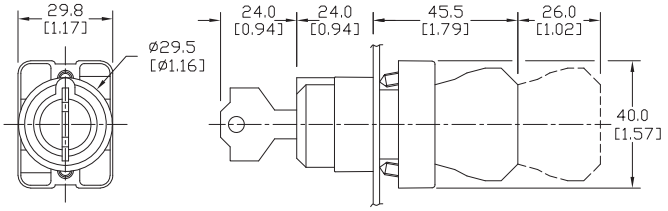

Two-position selector switches

Part Number	Price	Description - 2-Position Switches
GCX3300	<—>	22 mm plastic selector switch, two-position **maintained**, black knob. **One N.O.** contact block
GCX3310	<—>	22 mm plastic selector switch, two-position **spring-return from right**, black knob. **One N.O.** contact block
GCX3350	<—>	22 mm plastic selector switch, two-position **maintained**, black lever. **One N.O.** contact block
GCX3360	<—>	22 mm plastic selector switch, two-position **spring-return from right,** black lever. **One N.O.** contact block



GCX3300 Knob version

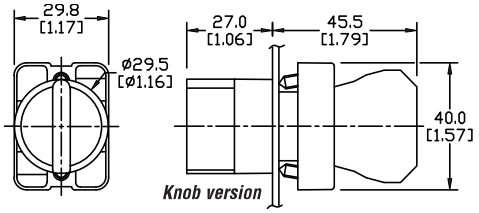

Knob version

Dimensions: mm [inches]



GCX3350 Lever version

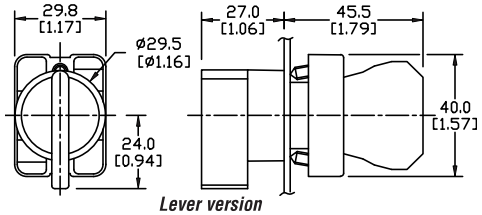

Lever version

Contact Closure Sequence for Two-Position Switch

Contact Closure Sequence - 2-Position Switch				
Contact Blocks	Contact Arrangement (viewed from front)		Switch Position (viewed from front)	
	Left	Right	Left (Note 1)	Right (Note 2)
1 x NC	NC		X	
		NC	X	
1 x NO	NO			X
		NO		X
2 x NC	NC	NC	XX	
2 x NO	NO	NO		XX

Note 1: Left switch position deactivates all contacts.
Note 2: Right switch position activates all contacts.

For accessories, see 22 mm Plastic Pilot Device Accessories in this section.

GCX Series 22 mm Plastic Selector Switches

Three-position selector switches

Part Number	Price	Description - 3-Position Switches
GCX3320-22	<-->	22 mm plastic selector switch, three-position **maintained**, black knob, **Two N.O.** and **two N.C.** contact blocks
GCX3330-22	<-->	22 mm plastic selector switch, three-position **spring-return to center**, black knob, **Two N.O.** and **two N.C.** contact blocks
GCX3370-22	<-->	22 mm plastic selector switch, three-position, **maintained**. black lever, **Two N.O.** and **two N.C.** contact blocks
GCX3380-22	<-->	2 mm plastic selector switch, three-position **spring-return to center**, black lever, **Two N.O.** and **two N.C.** contact blocks



Note: When using switches having two-deep contact blocks with the 22 mm plastic enclosures, be sure to use enclosures that are 74 mm deep; 51 mm-deep enclosures are too shallow and the switch body will not fit.



GCX3330-22 Knob version



GCX3370-22 Lever version

Dimensions: mm [inches]

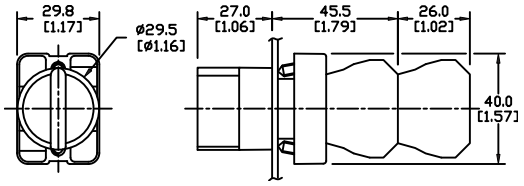

Knob version

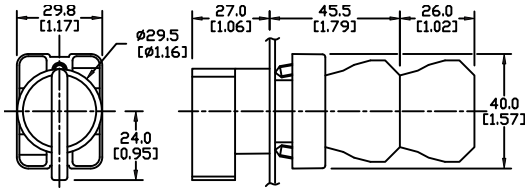

Lever version

Contact Closure Sequence for Three-Position Switch

Contact Closure Sequence - 3-Position Switch					
Contact Blocks	Contact Arrangement (viewed from front)		Switch Position (viewed from front)		
	Left	Right	Left (Note 1)	Center (Note 2)	Right (Note 3)
1 x NC	NC			X ——— X	
		NC	X ——— X		
1 x NO	NO		X		
		NO			X
2 x NC	NC	NC	X ——— XX ——— X		
2 x NO	NO	NO	X		X

Note 1: Left switch position activates left side contacts (viewed from front).
Note 2: Center switch position deactivates all contacts.
Note 2: Right switch position activates right side contacts (viewed from front).

For accessories, see 22 mm Plastic Pilot Device Accessories in this section.

Section 3.6.6

Sludge Line Flowmeter

Configuration summary

Mat. no.	Description Order code	Quantity	Unit
71262984	Promag P 500, 5P5B25, DN25 1" 5P5B25-CDDBAAAAFBLL2DEA1K0AA1+PC	1	ST

010	Approval; Transmitter; Sensor:	CD	CSA C/US; Cl.I,II,III Div.1, XP; Cl.I Cl.II,III Div.1, Gr.A-G
015	Power Supply:	D	24VDC
020	Output; Input 1:	BA	4-20mA HART
021	Output; Input 2:	A	W/o;
022	Output; Input 3:	A	W/o;
023	Output; Input 4:	A	W/o;
030	Display; Operation:	F	4-line illum.; touch control
035	Integrated ISEM Electronic:	B	Transmitter
041	Transmitter Housing:	L	Cast, stainless
042	Sensor Junction Housing:	L	Cast, stainless
045	Cable, Sensor Connection:	2	10m/30ft coil and signal cable
050	Electrical Connection:	D	Thread NPT1/2
060	Liner:	E	PTFE
070	Process Connection:	A1K	Cl.150, carbon steel, flange ASME B16.5
075	Electrodes:	0	1.4435/316L
080	Calibration Flow:	A	0.5%
480	Device Model:	A1	1
620	>>Accessory Enclosed:	PC	Pipe mounting kit

TI01226D/06/EN/08.20
71491364
2020-08-14

Technical Information
Proline Promag P 500

Electromagnetic flowmeter



High-temperature flowmeter for process applications, as remote version with up to 4 I/Os

Application

- The bidirectional measuring principle is virtually independent of pressure, density, temperature and viscosity
- Dedicated to chemical and process applications with corrosive liquids and high medium temperatures

Device properties

- Nominal diameter: max. DN 600 (24")
- All common Ex approvals
- Liner made of PTFE or PFA
- Remote version with up to 4 I/Os
- Backlit display with touch control and WLAN access
- Standard cable between sensor and transmitter

Your benefits

- Versatile applications – wide variety of wetted materials
- Energy-saving flow measurement – no pressure loss due to cross-section constriction
- Maintenance-free – no moving parts
- Full access to process and diagnostic information – numerous, freely combinable I/Os and fieldbuses
- Reduced complexity and variety – freely configurable I/O functionality
- Integrated verification – Heartbeat Technology

Endress+Hauser
People for Process Automation

Table of contents

About this document 4
Symbols 4

Function and system design 5
Measuring principle 5
Measuring system 6
Equipment architecture 7
Safety 8

Input 10
Measured variable 10
Measuring range 10
Operable flow range 11
Input signal 11

Output 13
Output and input variants 13
Output signal 15
Signal on alarm 19
Load 21
Ex connection data 22
Low flow cut off 23
Galvanic isolation 23
Protocol-specific data 24

Power supply 29
Terminal assignment 29
Device plugs available 30
Pin assignment, device plug 31
Supply voltage 32
Power consumption 32
Current consumption 32
Power supply failure 32
Electrical connection 33
Potential equalization 44
Terminals 46
Cable entries 46
Cable specification 46

Performance characteristics 50
Reference operating conditions 50
Maximum measured error 50
Repeatability 51
Influence of ambient temperature 51

Installation 52
Mounting location 52
Orientation 53
Inlet and outlet runs 54
Adapters 54
Length of connecting cable 55
Mounting the transmitter housing 56
Special mounting instructions 58

Environment 58
Ambient temperature range 58
Storage temperature 59
Degree of protection 59
Vibration- and shock-resistance 59
Mechanical load 59
Electromagnetic compatibility (EMC) 59

Process 60
Medium temperature range 60
Conductivity 61
Pressure-temperature ratings 61
Pressure tightness 63
Flow limit 64
Pressure loss 64
System pressure 64
Thermal insulation 64
Vibrations 65
Magnetism and static electricity 65

Mechanical construction 65
Dimensions in SI units 65
Dimensions in US units 76
Weight 83
Measuring tube specification 84
Materials 85
Fitted electrodes 88
Process connections 88
Surface roughness 88

Human interface 88
Operating concept 88
Languages 88
Local operation 89
Remote operation 89
Service interface 95
Network integration 97
Supported operating tools 97
HistoROM data management 98

Certificates and approvals 100
CE mark 100
RCM-tick symbol 100
Ex approval 100
Pharmaceutical compatibility 102
Functional safety 102
HART certification 102
FOUNDATION Fieldbus certification 103
Certification PROFIBUS 103
EtherNet/IP certification 103
Certification PROFINET 103
Radio approval 103
Pressure Equipment Directive 103
Measuring instrument approval 103
Additional certification 103
Other standards and guidelines 104

Ordering information 104

Application packages 104
Diagnostics functions 105
Heartbeat Technology 105
Cleaning 105
OPC-UA server 105

Accessories 105
Device-specific accessories 106
Communication-specific accessories 107
Service-specific accessories 108
System components 108

Supplementary documentation 109
Standard documentation 109
Device-dependent additional documentation 109

Registered trademarks 110

About this document

Symbols

Electrical symbols

Symbol	Meaning
	Direct current
	Alternating current
	Direct current and alternating current
	**Ground connection** A grounded terminal which, as far as the operator is concerned, is grounded via a grounding system.
	**Protective Earth (PE)** A terminal which must be connected to ground prior to establishing any other connections. The ground terminals are situated inside and outside the device: ▪ Inner ground terminal: Connects the protectiv earth to the mains supply. ▪ Outer ground terminal: Connects the device to the plant grounding system.

Communication symbols

Symbol	Meaning
	**Wireless Local Area Network (WLAN)** Communication via a wireless, local network.
	**LED** Light emitting diode is off.
	**LED** Light emitting diode is on.
	**LED** Light emitting diode is flashing.

Symbols for certain types of information

Symbol	Meaning
	**Permitted** Procedures, processes or actions that are permitted.
	**Preferred** Procedures, processes or actions that are preferred.
	**Forbidden** Procedures, processes or actions that are forbidden.
	**Tip** Indicates additional information.
	Reference to documentation.
	Reference to page.
	Reference to graphic.
	Visual inspection.

Symbols in graphics

Symbol	Meaning
1, 2, 3, ...	Item numbers
1., 2., 3., ...	Series of steps
A, B, C, ...	Views
A-A, B-B, C-C, ...	Sections
	Hazardous area
	Safe area (non-hazardous area)
	Flow direction

Function and system design

Measuring principle

Following *Faraday's law of magnetic induction*, a voltage is induced in a conductor moving through a magnetic field.

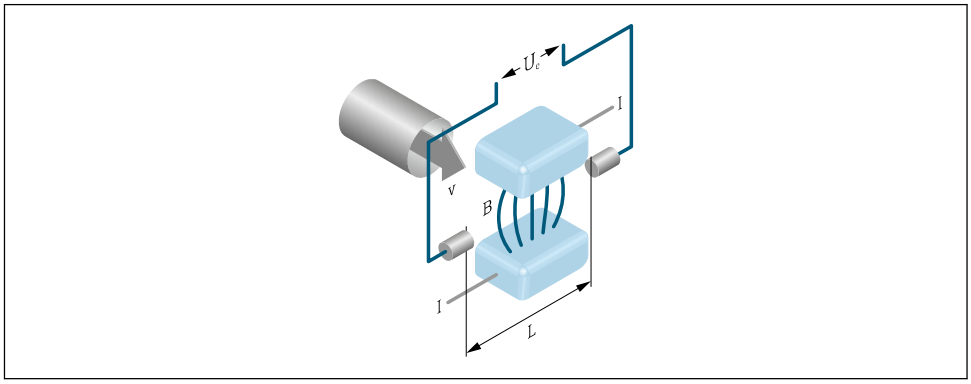

A0028962

Ue Induced voltage
B Magnetic induction (magnetic field)
L Electrode spacing
I Current
v Flow velocity

In the electromagnetic measuring principle, the flowing medium is the moving conductor. The voltage induced (U_e) is proportional to the flow velocity (v) and is supplied to the amplifier by means of two measuring electrodes. The flow volume (Q) is calculated via the pipe cross-section (A). The DC magnetic field is created through a switched direct current of alternating polarity.

Formulae for calculation

- Induced voltage $U_e = B \cdot L \cdot v$
- Volume flow $Q = A \cdot v$

Measuring system

The measuring system consists of a transmitter and a sensor. The transmitter and sensor are mounted in physically separate locations. They are interconnected by connecting cables.

Transmitter

Two versions of the transmitter are available.

Proline 500 – digital	Proline 500
For use in applications not required to meet special requirements due to ambient or operating conditions.	For use in applications required to meet special requirements due to ambient or operating conditions.
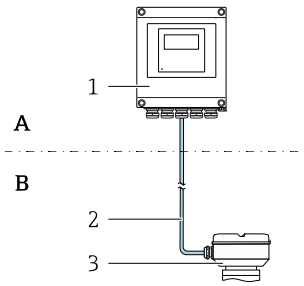 *A Non-hazardous area or Zone 2; Class I, Division 2* *B Non-hazardous area or Zone 2; Class I, Division 2 or Zone 1; Class I, Division 1* *1 Transmitter* *2 Connecting cable: cable, separate, standard* *3 Sensor connection housing with integrated ISEM*	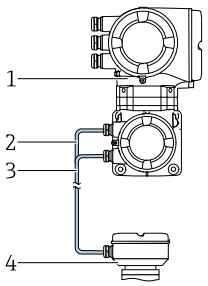 *Non-hazardous area or Zone 2; Class I, Division 2 or Zone 1; Class I, Division 1* *1 Transmitter with integrated ISEM* *2 Coil current cable* *3 Signal cable* *4 Sensor connection housing*
▪ Flexible and cost-effective separate installation. ▪ A standard cable can be used as the connecting cable.	Application examples for sensors without electronics: Strong vibrations at the sensor.
▪ Electronics in the transmitter housing, ISEM (intelligent sensor electronics module) in the sensor connection housing ▪ Signal transmission: digital Order code for "Integrated ISEM electronics", option **A** "Sensor"	▪ Electronics and ISEM (intelligent sensor electronics module) in the transmitter housing ▪ Signal transmission: analog Order code for "Integrated ISEM electronics", option **B** "Transmitter"
Connecting cable (can be ordered in various lengths)→ 🖹 106	
▪ Length: max. 300 m (1 000 ft) ▪ Standard cable with common shield (pair-stranded) ▪ Not sensitive to external EMC interference.	▪ Length: max. 200 m (656 ft), depending on medium conductivity ▪ Two connecting cables: ▪ One cable for coil current with a common shield (1 pair) ▪ One cable for signal transmission with a common shield and individual shielded cores (2 pairs)
Hazardous area	
Use in: Zone 2; Class I, Division 2 Mixed installation is possible: ▪ Sensor: Zone 1; Class I, Division 1 ▪ Transmitter: Zone 2; Class I, Division 2	Use in: Zone 1; Class I, Division 1 or Zone 2; Class I, Division 2
Housing versions and materials	
▪ Transmitter housing ▪ Aluminum, coated: aluminum, AlSi10Mg, coated ▪ Material: polycarbonate ▪ Material of window in transmitter housing ▪ Aluminum, coated: glass ▪ Polycarbonate: plastic	▪ Transmitter housing ▪ Aluminum, coated: aluminum, AlSi10Mg, coated ▪ Cast, stainless: cast, stainless steel, 1.4409 (CF3M) similar to 316L ▪ Window material: glass
Configuration	
▪ External operation via 4-line, backlit, graphic local display with touch control and guided menus ("Make-it-run" wizards) for application-specific commissioning. ▪ Via service interface or WLAN interface: ▪ Operating tools (e.g. FieldCare, DeviceCare) ▪ Web server (access via Web browser, e.g. Microsoft Internet Explorer, Microsoft Edge)	

Sensor connection housing

Different versions of the connection housing are available.

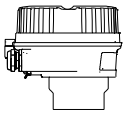	Order code for "Sensor connection housing", option A, "Aluminum, coated": Aluminum, AlSi10Mg, coated
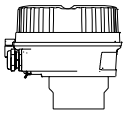	Order code for "Sensor connection housing", option L, "Cast, stainless": 1.4409 (CF3M) similar to 316L

Sensor

Promag P
 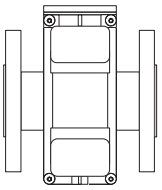
A0017703
	Nominal diameter range: DN 15 to 600 (½ to 24")
	Materials:
	▪ Sensor housing:
	  ▪ Aluminum, AlSi10Mg, coated
	  ▪ DN 15 to 300 (½ to 12"): aluminum, AlSi10Mg, coated
	  ▪ DN 350 to 600 (14 to 24"): carbon steel with protective varnish
	▪ Measuring tubes [1]: stainless steel, 1.4301/1.4306
	▪ Liner: PFA, PTFE
	▪ Electrodes: stainless steel, 1.4435 (F316L); Alloy C22, 2.4602 (UNS N06022); platinum; tantalum; titanium
	▪ Process connections: stainless steel, 1.4571/F316L; carbon steel, A105/FE410WB/HII/S235JRG2/S275JR
	▪ Seals: as per DIN EN 1514-1
	▪ Ground disks: stainless steel, 1.4435 (316L); Alloy C22, 2.4602 (UNS N06022); tantalum; titanium

1) For flanges made of carbon steel with Al/Zn protective coating (DN 15 to 300 (½ to 12")) or protective varnish (DN 350 to 600 (14 to 24"))

Equipment architecture

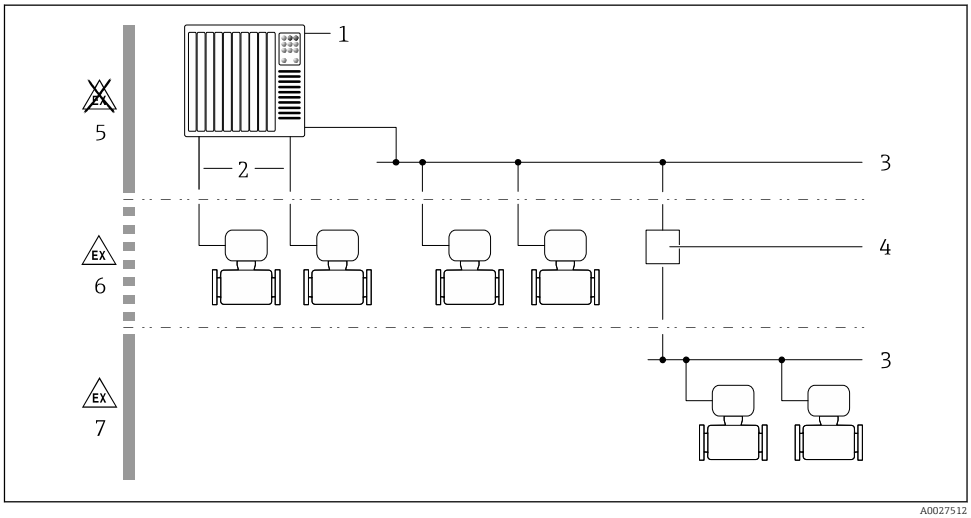

A0027512

1 Possibilities for integrating measuring devices into a system

1 Control system (e.g. PLC)
2 Connecting cable (0/4 to 20 mA HART etc.)
3 Fieldbus
4 Coupler
5 Non-hazardous area
6 Hazardous area: Zone 2; Class I, Division 2
7 Hazardous area: Zone 1; Class I, Division 1

Safety

IT security

Our warranty is valid only if the device is installed and used as described in the Operating Instructions. The device is equipped with security mechanisms to protect it against any inadvertent changes to the settings.

IT security measures, which provide additional protection for the device and associated data transfer, must be implemented by the operators themselves in line with their security standards.

Device-specific IT security

The device offers a range of specific functions to support protective measures on the operator's side. These functions can be configured by the user and guarantee greater in-operation safety if used correctly. An overview of the most important functions is provided in the following section.

Function/interface	Factory setting	Recommendation
Write protection via hardware write protection switch → 🖹 8	Not enabled.	On an individual basis following risk assessment.
Access code (also applies for Web server login or FieldCare connection) → 🖹 8	Not enabled (0000).	Assign a customized access code during commissioning.
WLAN (order option in display module)	Enabled.	On an individual basis following risk assessment.
WLAN security mode	Enabled (WPA2-PSK)	Do not change.
WLAN passphrase (password) → 🖹 9	Serial number	Assign an individual WLAN passphrase during commissioning.
WLAN mode	Access Point	On an individual basis following risk assessment.
Web server→ 🖹 9	Enabled.	On an individual basis following risk assessment.
CDI-RJ45 service interface → 🖹 9	–	On an individual basis following risk assessment.

Protecting access via hardware write protection

Write access to the device parameters via the local display, Web browser or operating tool (e.g. FieldCare, DeviceCare) can be disabled via a write protection switch (DIP switch on the motherboard). When hardware write protection is enabled, only read access to the parameters is possible.

Hardware write protection is disabled when the device is delivered.

Protecting access via a password

Different passwords are available to protect write access to the device parameters or access to the device via the WLAN interface.

- User-specific access code
  Protect write access to the device parameters via the local display, Web browser or operating tool (e.g. FieldCare, DeviceCare). Access authorization is clearly regulated through the use of a user-specific access code.
- WLAN passphrase
  The network key protects a connection between an operating unit (e.g. notebook or tablet) and the device via the WLAN interface which can be ordered as an option.
- Infrastructure mode
  When the device is operated in infrastructure mode, the WLAN passphrase corresponds to the WLAN passphrase configured on the operator side.

User-specific access code

Write access to the device parameters via the local display, Web browser or operating tool (e.g. FieldCare, DeviceCare) can be protected by the modifiable, user-specific access code.

WLAN passphrase: Operation as WLAN access point

A connection between an operating unit (e.g. notebook or tablet) and the device via the WLAN interface, which can be ordered as an optional extra, is protected by the network key. The WLAN authentication of the network key complies with the IEEE 802.11 standard.

When the device is delivered, the network key is pre-defined depending on the device. It can be changed via the **WLAN settings** submenu in the **WLAN passphrase** parameter.

Infrastructure mode

A connection between the device and WLAN access point is protected by means of an SSID and passphrase on the system side. Please contact the relevant system administrator for access.

General notes on the use of passwords

- The access code and network key supplied with the device should be changed during commissioning.
- Follow the general rules for generating a secure password when defining and managing the access code or network key.
- The user is responsible for the management and careful handling of the access code and network key.

Access via Web server

The device can be operated and configured via a Web browser with the integrated Web server. The connection is via the service interface (CDI-RJ45) or the WLAN interface. For device versions with the EtherNet/IP and PROFINET communication protocols, the connection can also be established via the terminal connection for signal transmission with EtherNet/IP or PROFINET (RJ45 connector).

The Web server is enabled when the device is delivered. The Web server can be disabled if necessary (e.g. after commissioning) via the **Web server functionality** parameter.

The device and status information can be hidden on the login page. This prevents unauthorized access to the information.

For detailed information on device parameters, see:
The "Description of Device Parameters" document → 109

Access via OPC-UA

The "OPC UA Server" application package is available in the device version with the HART communication protocol → 105.

The device can communicate with OPC UA clients using the "OPC UA Server" application package.

The OPC UA server integrated in the device can be accessed via the WLAN access point using the WLAN interface - which can be ordered as an optional extra - or the service interface (CDI- RJ45) via Ethernet network. Access rights and authorization as per separate configuration.

The following Security Modes are supported as per the OPC UA Specification (IEC 62541):
- None
- Basic128Rsa15 – signed
- Basic128Rsa15 – signed and encrypted

Access via service interface (CDI-RJ45)

The device can be connected to a network via the service interface (CDI-RJ45). Device-specific functions guarantee the secure operation of the device in a network.

The use of relevant industrial standards and guidelines that have been defined by national and international safety committees, such as IEC/ISA62443 or the IEEE, is recommended. This includes organizational security measures such as the assignment of access authorization as well as technical measures such as network segmentation.

Transmitters with an Ex de approval may not be connected via the service interface (CDI-RJ45)!

Order code for "Approval transmitter + sensor", options (Ex de): BA, BB, C1, C2, GA, GB, MA, MB, NA, NB

The device can be integrated in a ring topology. The device is integrated via the terminal connection for signal transmission (output 1) and the connection to the service interface (CDI-RJ45) .

Input

Measured variable

Direct measured variables

- Volume flow (proportional to induced voltage)
- Electrical conductivity

Calculated measured variables

- Mass flow
- Corrected volume flow

Measuring range

Typically v = 0.01 to 10 m/s (0.03 to 33 ft/s) with the specified accuracy

Flow characteristic values in SI units: DN 15 to 125 (½ to 4")

Nominal diameter		Recommended flow	Factory settings		
		min./max. full scale value (v ~ 0.3/10 m/s)	Full scale value current output (v ~ 2.5 m/s)	Pulse value (~ 2 pulse/s)	Low flow cut off (v ~ 0.04 m/s)
[mm]	[in]	[dm³/min]	[dm³/min]	[dm³]	[dm³/min]
15	½	4 to 100	25	0.2	0.5
25	1	9 to 300	75	0.5	1
32	–	15 to 500	125	1	2
40	1 ½	25 to 700	200	1.5	3
50	2	35 to 1 100	300	2.5	5
65	–	60 to 2 000	500	5	8
80	3	90 to 3 000	750	5	12
100	4	145 to 4 700	1200	10	20
125	–	220 to 7 500	1850	15	30

Flow characteristic values in SI units: DN 150 to 600 (6 to 24")

Nominal diameter		Recommended flow	Factory settings		
		min./max. full scale value (v ~ 0.3/10 m/s)	Full scale value current output (v ~ 2.5 m/s)	Pulse value (~ 2 pulse/s)	Low flow cut off (v ~ 0.04 m/s)
[mm]	[in]	[m³/h]	[m³/h]	[m³]	[m³/h]
150	6	20 to 600	150	0.03	2.5
200	8	35 to 1 100	300	0.05	5
250	10	55 to 1 700	500	0.05	7.5
300	12	80 to 2 400	750	0.1	10
350	14	110 to 3 300	1 000	0.1	15
400	16	140 to 4 200	1 200	0.15	20
450	18	180 to 5 400	1 500	0.25	25
500	20	220 to 6 600	2 000	0.25	30
600	24	310 to 9 600	2 500	0.3	40

Flow characteristic values in US units: ½ - 24" (DN 15 - 600)

Nominal diameter		Recommended flow	Factory settings		
		min./max. full scale value (v ~ 0.3/10 m/s)	Full scale value current output (v ~ 2.5 m/s)	Pulse value (~ 2 pulse/s)	Low flow cut off (v ~ 0.04 m/s)
[in]	[mm]	[gal/min]	[gal/min]	[gal]	[gal/min]
½	15	1.0 to 27	6	0.1	0.15
1	25	2.5 to 80	18	0.2	0.25
1 ½	40	7 to 190	50	0.5	0.75
2	50	10 to 300	75	0.5	1.25
3	80	24 to 800	200	2	2.5
4	100	40 to 1250	300	2	4
6	150	90 to 2650	600	5	12
8	200	155 to 4850	1200	10	15
10	250	250 to 7500	1500	15	30
12	300	350 to 10600	2400	25	45
14	350	500 to 15000	3600	30	60
16	400	600 to 19000	4800	50	60
18	450	800 to 24000	6000	50	90
20	500	1000 to 30000	7500	75	120
24	600	1400 to 44000	10500	100	180

Recommended measuring range

Flow limit → 64

Operable flow range

Over 1000 : 1

Input signal

Input and output versions

→ 13

External measured values

To increase the accuracy of certain measured variables or to calculate the mass flow, the automation system can continuously write different measured values to the measuring device:
- Medium temperature enables temperature-compensated conductivity measurement (e.g. iTEMP)
- Reference density for calculating the mass flow

Various pressure transmitters and temperature measuring devices can be ordered from Endress +Hauser: see "Accessories" section → 108

It is recommended to read in external measured values to calculate the corrected volume flow.

HART protocol

The measured values are written from the automation system to the measuring device via the HART protocol. The pressure transmitter must support the following protocol-specific functions:
- HART protocol
- Burst mode

Current input

The measured values are written from the automation system to the measuring device via the current input → 12.

Digital communication

The measured values can be written from the automation system to the measuring via:
- FOUNDATION Fieldbus
- PROFIBUS DP
- PROFIBUS PA
- Modbus RS485
- EtherNet/IP
- PROFINET

Current input 0/4 to 20 mA

Current input	0/4 to 20 mA (active/passive)
Current span	▪ 4 to 20 mA (active) ▪ 0/4 to 20 mA (passive)
Resolution	1 µA
Voltage drop	Typically: 0.6 to 2 V for 3.6 to 22 mA (passive)
Maximum input voltage	≤ 30 V (passive)
Open-circuit voltage	≤ 28.8 V (active)
Possible input variables	▪ Temperature ▪ Density

Status input

Maximum input values	▪ DC −3 to 30 V ▪ If status input is active (ON): R_i >3 kΩ
Response time	Configurable: 5 to 200 ms
Input signal level	▪ Low signal: DC −3 to +5 V ▪ High signal: DC 12 to 30 V
Assignable functions	▪ Off ▪ Reset the individual totalizers separately ▪ Reset all totalizers ▪ Flow override

Output

Output and input variants

Depending on the option selected for output/input 1, different options are available for the other outputs and inputs. Only one option can be selected for each output/input 1 to 4. The following tables must be read vertically (↓).

Example: If the option BA "4–20 mA HART" was selected for output/input 1, one of the options A, B, D, E, F, H, I or J is available for output 2 and one of the options A, B, D, E, F, H, I or J is available for output 3 and 4.

Output/input 1 and options for output/input 2

Options for output/input 3 and 4

Order code for "Output; input 1" (020) →	Possible options										
Current output 4 to 20 mA HART	**BA**										
Current output 4 to 20 mA HART Ex i passive	↓	**CA**									
Current output 4 to 20 mA HART Ex i active		↓	**CC**								
FOUNDATION Fieldbus			↓	**SA**							
FOUNDATION Fieldbus Ex i				↓	**TA**						
PROFIBUS DP					↓	**LA**					
PROFIBUS PA						↓	**GA**				
PROFIBUS PA Ex i							↓	**HA**			
Modbus RS485								↓	**MA**		
EtherNet/IP 2-port switch integrated									↓	**NA**	
PROFINET 2-port switch integrated										↓	**RA**
Order code for "Output; input 2" (021) →	↓	↓	↓	↓	↓	↓	↓	↓	↓	↓	↓
Not assigned	**A**	**A**	**A**	**A**	**A**	**A**	**A**	**A**	**A**	**A**	**A**
Current output 4 to 20 mA	**B**			**B**		**B**	**B**		**B**	**B**	**B**
Current output 4 to 20 mA Ex i passive		**C**	**C**		**C**			**C**			
User-configurable input/output [1]	**D**			**D**		**D**	**D**		**D**	**D**	**D**
Pulse/frequency/switch output	**E**			**E**		**E**	**E**		**E**	**E**	**E**
Double pulse output [2]	**F**								**F**		
Pulse/frequency/switch output Ex i passive		**G**	**G**		**G**			**G**			
Relay output	**H**			**H**		**H**	**H**		**H**	**H**	**H**
Current input 0/4 to 20 mA	**I**			**I**		**I**	**I**		**I**	**I**	**I**
Status input	**J**			**J**		**J**	**J**		**J**	**J**	**J**

1) A specific input or output can be assigned to a user-configurable input/output → 19.
2) If double pulse output (F) is selected for output/input 2 (021), only the double pulse output (F) option is available for selection for output/input 3 (022).

Output/input 1 and options for output/input 3 and 4

Options for output/input 2 → 13

Order code for "Output; input 1" (020) →	Possible options										
Current output 4 to 20 mA HART	**BA**										
Current output 4 to 20 mA HART Ex i passive	↓	**CA**									
Current output 4 to 20 mA HART Ex i active		↓	**CC**								
FOUNDATION Fieldbus			↓	**SA**							
FOUNDATION Fieldbus Ex i				↓	**TA**						
PROFIBUS DP					↓	**LA**					
PROFIBUS PA						↓	**GA**				
PROFIBUS PA Ex i							↓	**HA**			
Modbus RS485								↓	**MA**		
EtherNet/IP 2-port switch integrated									↓	**NA**	
PROFINET 2-port switch integrated										↓	**RA**
Order code for "Output; input 3" (022), "Output; input 4" (023) →	↓	↓	↓	↓	↓	↓	↓	↓	↓	↓	↓
Not assigned	**A**	**A**	**A**	**A**	**A**	**A**	**A**	**A**	**A**	**A**	**A**
Current output 4 to 20 mA	**B**					**B**			**B**	**B**	**B**
Current output 4 to 20 mA Ex i passive [1]		**C**	**C**								
User-configurable input/output	**D**					**D**			**D**	**D**	**D**
Pulse/frequency/switch output	**E**					**E**			**E**	**E**	**E**
Double pulse output (slave) [2]	**F**								**F**		
Pulse/frequency/switch output Ex i passive [3]		**G**	**G**								
Relay output	**H**					**H**			**H**	**H**	**H**
Current input 0/4 to 20 mA	**I**					**I**			**I**	**I**	**I**
Status input	**J**					**J**			**J**	**J**	**J**

1) For output/input 4 the current output 4 to 20 mA Ex i passive (C) is not available.
2) The double pulse output (F) option is not available for input/output 4.
3) For output/input 4 the pulse/frequency/switch output Ex i passive (G) is not available.

Output signal

Current output 4 to 20 mA HART

Order code	"Output; input 1" (20): Option BA: current output 4 to 20 mA HART
Signal mode	Can be set to: ▪ Active ▪ Passive
Current range	Can be set to: ▪ 4 to 20 mA NAMUR ▪ 4 to 20 mA US ▪ 4 to 20 mA ▪ 0 to 20 mA (only if the signal mode is active) ▪ Fixed current
Open-circuit voltage	DC 28.8 V (active)
Maximum input voltage	DC 30 V (passive)
Load	250 to 700 Ω
Resolution	0.38 µA
Damping	Configurable: 0 to 999.9 s
Assignable measured variables	▪ Volume flow ▪ Mass flow ▪ Corrected volume flow ▪ Flow velocity ▪ Conductivity ▪ Electronics temperature

Current output 4 to 20 mA HART Ex i

Order code	"Output; input 1" (20) choose from: ▪ Option CA: current output 4 to 20 mA HART Ex i passive ▪ Option CC: current output 4 to 20 mA HART Ex i active
Signal mode	Depends on the selected order version.
Current range	Can be set to: ▪ 4 to 20 mA NAMUR ▪ 4 to 20 mA US ▪ 4 to 20 mA ▪ 0 to 20 mA (only if the signal mode is active) ▪ Fixed current
Open-circuit voltage	DC 21.8 V (active)
Maximum input voltage	DC 30 V (passive)
Load	▪ 250 to 400 Ω (active) ▪ 250 to 700 Ω (passive)
Resolution	0.38 µA
Damping	Configurable: 0 to 999.9 s
Assignable measured variables	▪ Volume flow ▪ Mass flow ▪ Corrected volume flow ▪ Flow velocity ▪ Conductivity ▪ Electronics temperature

FOUNDATION Fieldbus

FOUNDATION Fieldbus	H1, IEC 61158-2, galvanically isolated
Data transfer	31.25 kbit/s

Current consumption	10 mA
Permitted supply voltage	9 to 32 V
Bus connection	With integrated reverse polarity protection

PROFIBUS DP

Signal encoding	NRZ code
Data transfer	9.6 kBaud...12 MBaud

PROFIBUS PA

PROFIBUS PA	In accordance with EN 50170 Volume 2, IEC 61158-2 (MBP), galvanically isolated
Data transmission	31.25 kbit/s
Current consumption	10 mA
Permitted supply voltage	9 to 32 V
Bus connection	With integrated reverse polarity protection

Modbus RS485

Physical interface	RS485 in accordance with EIA/TIA-485 standard
Terminating resistor	Integrated, can be activated via DIP switches

EtherNet/IP

Standards	In accordance with IEEE 802.3

PROFINET

Standards	In accordance with IEEE 802.3

Current output 4 to 20 mA

Order code	"Output; input 2" (21), "Output; input 3" (022) or "Output; input 4" (023): Option B: current output 4 to 20 mA
Signal mode	Can be set to: ▪ Active ▪ Passive
Current span	Can be set to: ▪ 4 to 20 mA NAMUR ▪ 4 to 20 mA US ▪ 4 to 20 mA ▪ 0 to 20 mA (only if the signal mode is active) ▪ Fixed current
Maximum output values	22.5 mA
Open-circuit voltage	DC 28.8 V (active)
Maximum input voltage	DC 30 V (passive)
Load	0 to 700 Ω
Resolution	0.38 µA

Damping	Configurable: 0 to 999.9 s
Assignable measured variables	▪ Volume flow ▪ Mass flow ▪ Corrected volume flow ▪ Flow velocity ▪ Conductivity ▪ Electronics temperature

Current output 4 to 20 mA Ex i passive

Order code	"Output; input 2" (21), "Output; input 3" (022): Option C: current output 4 to 20 mA Ex i passive
Signal mode	Passive
Current span	Can be set to: ▪ 4 to 20 mA NAMUR ▪ 4 to 20 mA US ▪ 4 to 20 mA ▪ Fixed current
Maximum output values	22.5 mA
Maximum input voltage	DC 30 V
Load	0 to 700 Ω
Resolution	0.38 µA
Damping	Configurable: 0 to 999 s
Assignable measured variables	▪ Volume flow ▪ Mass flow ▪ Corrected volume flow ▪ Flow velocity ▪ Conductivity ▪ Electronics temperature

Pulse/frequency/switch output

Function	Can be set to pulse, frequency or switch output
Version	Open collector Can be set to: ▪ Active ▪ Passive ▪ Passive NAMUR Ex-i, passive
Maximum input values	DC 30 V, 250 mA (passive)
Open-circuit voltage	DC 28.8 V (active)
Voltage drop	For 22.5 mA: ≤ DC 2 V
Pulse output	
Maximum input values	DC 30 V, 250 mA (passive)
Maximum output current	22.5 mA (active)
Open-circuit voltage	DC 28.8 V (active)
Pulse width	Configurable: 0.05 to 2 000 ms
Maximum pulse rate	10 000 Impulse/s
Pulse value	Adjustable
Assignable measured variables	▪ Volume flow ▪ Mass flow ▪ Corrected volume flow

Frequency output	
Maximum input values	DC 30 V, 250 mA (passive)
Maximum output current	22.5 mA (active)
Open-circuit voltage	DC 28.8 V (active)
Output frequency	Adjustable: end value frequency 2 to 10 000 Hz (f_{max} = 12 500 Hz)
Damping	Configurable: 0 to 999.9 s
Pulse/pause ratio	1:1
Assignable measured variables	▪ Volume flow ▪ Mass flow ▪ Corrected volume flow ▪ Flow velocity ▪ Conductivity ▪ Electronics temperature
Switch output	
Maximum input values	DC 30 V, 250 mA (passive)
Open-circuit voltage	DC 28.8 V (active)
Switching behavior	Binary, conductive or non-conductive
Switching delay	Configurable: 0 to 100 s
Number of switching cycles	Unlimited

Assignable functions	▪ Off
	▪ On
	▪ Diagnostic behavior
	▪ Limit value:
	  ▪ Off
	  ▪ Volume flow
	  ▪ Mass flow
	  ▪ Corrected volume flow
	  ▪ Flow velocity
	  ▪ Conductivity
	  ▪ Totalizer 1-3
	  ▪ Electronics temperature
	▪ Flow direction monitoring
	▪ Status
	  ▪ Empty pipe detection
	  ▪ Low flow cut off

Double pulse output

Function	Double pulse
Version	Open collector Can be set to: ▪ Active ▪ Passive ▪ Passive NAMUR
Maximum input values	DC 30 V, 250 mA (passive)
Open-circuit voltage	DC 28.8 V (active)
Voltage drop	For 22.5 mA: ≤ DC 2 V
Output frequency	Configurable: 0 to 1 000 Hz
Damping	Configurable: 0 to 999 s

Pulse/pause ratio	1:1
Assignable measured variables	▪ Volume flow ▪ Mass flow ▪ Corrected volume flow ▪ Flow velocity ▪ Conductivity ▪ Electronics temperature

Relay output

Function	Switch output
Version	Relay output, galvanically isolated
Switching behavior	Can be set to: ▪ NO (normally open), factory setting ▪ NC (normally closed)
Maximum switching capacity (passive)	▪ DC 30 V, 0.1 A ▪ AC 30 V, 0.5 A

Assignable functions	▪ Off
	▪ On
	▪ Diagnostic behavior
	▪ Limit value:
	  ▪ Off
	  ▪ Volume flow
	  ▪ Mass flow
	  ▪ Corrected volume flow
	  ▪ Flow velocity
	  ▪ Conductivity
	  ▪ Totalizer 1-3
	  ▪ Electronics temperature
	▪ Flow direction monitoring
	▪ Status
	  ▪ Empty pipe detection
	  ▪ Low flow cut off

User-configurable input/output

One specific input or output is assigned to a user-configurable input/output (configurable I/O) during device commissioning.

The following inputs and outputs are available for assignment:
- Choice of current output: 4 to 20 mA (active), 0/4 to 20 mA (passive)
- Pulse/frequency/switch output
- Choice of current input: 4 to 20 mA (active), 0/4 to 20 mA (passive)
- Status input

The technical values correspond to those of the inputs and outputs described in this section.

Signal on alarm

Depending on the interface, failure information is displayed as follows:

HART current output

Device diagnostics	Device condition can be read out via HART Command 48

PROFIBUS PA

Status and alarm messages	Diagnostics in accordance with PROFIBUS PA Profile 3.02
Failure current FDE (Fault Disconnection Electronic)	0 mA

PROFIBUS DP

Status and alarm messages	Diagnostics in accordance with PROFIBUS PA Profile 3.02

EtherNet/IP

Device diagnostics	Device condition can be read out in Input Assembly

PROFINET

Device diagnostics	According to "Application Layer protocol for decentralized periphery", Version 2.3

FOUNDATION Fieldbus

Status and alarm messages	Diagnostics in accordance with FF-891
Failure current FDE (Fault Disconnection Electronic)	0 mA

Modbus RS485

Failure mode	Choose from: ▪ NaN value instead of current value ▪ Last valid value

Current output 0/4 to 20 mA

4 to 20 mA

Failure mode	Choose from: ▪ 4 to 20 mA in accordance with NAMUR recommendation NE 43 ▪ 4 to 20 mA in accordance with US ▪ Min. value: 3.59 mA ▪ Max. value: 22.5 mA ▪ Freely definable value between: 3.59 to 22.5 mA ▪ Actual value ▪ Last valid value

0 to 20 mA

Failure mode	Choose from: ▪ Maximum alarm: 22 mA ▪ Freely definable value between: 0 to 20.5 mA

Pulse/frequency/switch output

Pulse output	
Failure mode	Choose from: ▪ Actual value ▪ No pulses
Frequency output	
Failure mode	Choose from: ▪ Actual value ▪ 0 Hz ▪ Defined value (f_{max} 2 to 12 500 Hz)

Switch output	
Failure mode	Choose from: ▪ Current status ▪ Open ▪ Closed

Relay output

Failure mode	Choose from: ▪ Current status ▪ Open ▪ Closed

Local display

Plain text display	With information on cause and remedial measures
Backlight	Red backlighting indicates a device error.

Status signal as per NAMUR recommendation NE 107

Interface/protocol

- Via digital communication:
  - HART protocol
  - FOUNDATION Fieldbus
  - PROFIBUS PA
  - PROFIBUS DP
  - Modbus RS485
  - EtherNet/IP
  - PROFINET
- Via service interface
  - CDI-RJ45 service interface
  - WLAN interface

Plain text display	With information on cause and remedial measures

Additional information on remote operation → 89

Web browser

Plain text display	With information on cause and remedial measures

Light emitting diodes (LED)

Status information	Status indicated by various light emitting diodes The following information is displayed depending on the device version: ▪ Supply voltage active ▪ Data transmission active ▪ Device alarm/error has occurred ▪ EtherNet/IP network available ▪ EtherNet/IP connection established ▪ PROFINET network available ▪ PROFINET connection established ▪ PROFINET blinking feature

Load	Output signal → 15

Ex connection data

Safety-related values

Order code for "Output; input 1"	Output type	Safety-related values "Output; input 1"	
		26 (+)	27 (–)
Option **BA**	Current output 4 to 20 mA HART	U_N = 30 V_{DC} U_M = 250 V_{AC}	
Option **GA**	PROFIBUS PA	U_N = 30 V_{DC} U_M = 250 V_{AC}	
Option **LA**	PROFIBUS DP	U_N = 30 V_{DC} U_M = 250 V_{AC}	
Option **MA**	Modbus RS485	U_N = 30 V_{DC} U_M = 250 V_{AC}	
Option **SA**	FOUNDATION Fieldbus	U_N = 30 V_{DC} U_M = 250 V_{AC}	
Option **NA**	EtherNet/IP	U_N = 30 V_{DC} U_M = 250 V_{AC}	
Option **RA**	PROFINET	U_N = 30 V_{DC} U_M = 250 V_{AC}	

Order code for "Output; input 2"; "Output; input 3" "Output; input 4"	Output type	Safety-related values					
		Output; input 2		Output; input 3		Output; input 4 [1]	
		24 (+)	25 (–)	22 (+)	23 (–)	20 (+)	21 (–)
Option **B**	Current output 4 to 20 mA	U_N = 30 V_{DC} U_M = 250 V_{AC}					
Option **D**	User-configurable input/ output	U_N = 30 V_{DC} U_M = 250 V_{AC}					
Option **E**	Pulse/frequency/switch output	U_N = 30 V_{DC} U_M = 250 V_{AC}					
Option **F**	Double pulse output	U_N = 30 V_{DC} U_M = 250 V_{AC}					
Option **H**	Relay output	U_N = 30 V_{DC} I_N =100 mA_{DC}/500 mA_{AC} U_M = 250 V_{AC}					
Option **I**	Current input 4 to 20 mA	U_N = 30 V_{DC} U_M = 250 V_{AC}					
Option **J**	Status input	U_N = 30 V_{DC} U_M = 250 V_{AC}					

1) The order code "Output; input 4" is only available for the Proline 500 – digital transmitter.

Intrinsically safe values

Order code for "Output; input 1"	Output type	Intrinsically safe values "Output; input 1"	
		26 (+)	27 (–)
Option **CA**	Current output 4 to 20 mA HART Ex i passive	U_i = 30 V I_i = 100 mA P_i = 1.25 W L_i = 0 µH C_i = 6 nF	
Option **CC**	Current output 4 to 20 mA HART Ex i active	**Ex ia** [1] U_0 = 21.8 V I_0 = 90 mA P_0 = 491 mW L_0 = 4.1 mH (IIC)/15 mH (IIB) C_0 = 160 nF (IIC)/ 1 160 nF (IIB) U_i = 30 V I_i = 10 mA P_i = 0.3 W L_i = 5 µH C_i = 6 nF	**Ex ic** [2] U_0 = 21.8 V I_0 = 90 mA P_0 = 491 mW L_0 = 9 mH (IIC)/39 mH (IIB) C_0 = 600 nF (IIC)/ 4 000 nF (IIB)
Option **HA**	PROFIBUS PA Ex i (FISCO Field Device)	**Ex ia** [3] U_i = 30 V I_i = 570 mA P_i = 8.5 W L_i = 10 µH C_i = 5 nF	**Ex ic** [4] U_i = 32 V I_i = 570 mA P_i = 8.5 W L_i = 10 µH C_i = 5 nF
Option **TA**	FOUNDATION Fieldbus Ex i	**Ex ia** [3] U_i = 30 V I_i = 570 mA P_i = 8.5 W L_i = 10 µH C_i = 5 nF	**Ex ic** [4] U_i = 32 V I_i = 570 mA P_i = 8.5 W L_i = 10 µH C_i = 5 nF

1) Only available for the Zone 1; Class I, Division 1 version
2) Only available for the Zone 2; Class I, Division 2 version and only for the Proline 500 – digital transmitter
3) Only available for the Zone 1; Class I, Division 1 version
4) Only available for the Zone 2; Class I, Division 2 version and only for the Proline 500 – digital transmitter

Order code for "Output; input 2"; "Output; input 3"; "Output; input 4"	Output type	Intrinsically safe values or NIFW values					
		Output; input 2		Output; input 3		Output; input 4 [1]	
		24 (+)	25 (–)	22 (+)	23 (–)	20 (+)	21 (–)
Option C	Current output 4 to 20 mA Ex i passive	U_i = 30 V I_i = 100 mA P_i = 1.25 W L_i = 0 C_i = 0					
Option G	Pulse/frequency/switch output Ex i passive	U_i = 30 V I_i = 100 mA P_i = 1.25 W L_i = 0 C_i = 0					

1) The order code "Output; input 4" is only available for the Proline 500 – digital transmitter.

Low flow cut off

The switch points for low flow cut off are user-selectable.

Galvanic isolation

The outputs are galvanically isolated from one another and from earth (PE).

Protocol-specific data

HART

Manufacturer ID	0x11
Device type ID	0x3C
HART protocol revision	7
Device description files (DTM, DD)	Information and files under: www.endress.com
HART load	Min. 250 Ω
System integration	Information on system integration: Operating Instructions → 📄 109. ▪ Measured variables via HART protocol ▪ Burst Mode functionality

FOUNDATION Fieldbus

Manufacturer ID	0x452B48 (hex)
Ident number	0x103C (hex)
Device revision	1
DD revision	Information and files under: ▪ www.endress.com ▪ www.fieldbus.org
CFF revision	
Interoperability Test Kit (ITK)	Version 6.2.0
ITK Test Campaign Number	Information: ▪ www.endress.com ▪ www.fieldbus.org
Link Master capability (LAS)	Yes
Choice of "Link Master" and "Basic Device"	Yes Factory setting: Basic Device
Node address	Factory setting: 247 (0xF7)
Supported functions	The following methods are supported: ▪ Restart ▪ ENP Restart ▪ Diagnostic ▪ Set to OOS ▪ Set to AUTO ▪ Read trend data ▪ Read event logbook
Virtual Communication Relationships (VCRs)	
Number of VCRs	44
Number of link objects in VFD	50
Permanent entries	1
Client VCRs	0
Server VCRs	10
Source VCRs	43
Sink VCRs	0
Subscriber VCRs	43
Publisher VCRs	43
Device Link Capabilities	
Slot time	4
Min. delay between PDU	8

Max. response delay	16
System integration	Information regarding system integration: Operating Instructions → 🖹 109. ▪ Cyclic data transmission ▪ Description of the modules ▪ Execution times ▪ Methods

PROFIBUS DP

Manufacturer ID	0x11
Ident number	0x1570
Profile version	3.02
Device description files (GSD, DTM, DD)	Information and files under: ▪ www.endress.com On the product page for the device: Documents/Software → Device drivers ▪ www.profibus.org
Supported functions	▪ Identification & Maintenance Simplest device identification on the part of the control system and nameplate ▪ PROFIBUS upload/download Reading and writing parameters is up to ten times faster with PROFIBUS upload/download ▪ Condensed status Simplest and self-explanatory diagnostic information by categorizing diagnostic messages that occur
Configuration of the device address	▪ DIP switches on the I/O electronics module ▪ Via operating tools (e.g. FieldCare)
Compatibility with earlier model	If the device is replaced, the measuring device Promag 500 supports the compatibility of the cyclic data with previous models. It is not necessary to adjust the engineering parameters of the PROFIBUS network with the Promag 500 GSD file. Earlier models: ▪ Promag 50 PROFIBUS DP ▪ ID No.: 1546 (hex) ▪ Extended GSD file: EH3x1546.gsd ▪ Standard GSD file: EH3_1546.gsd ▪ Promag 53 PROFIBUS DP ▪ ID No.: 1526 (hex) ▪ Extended GSD file: EH3x1526.gsd ▪ Standard GSD file: EH3_1526.gsd Description of the function scope of compatibility: Operating Instructions → 🖹 109.
System integration	Information regarding system integration: Operating Instructions → 🖹 109. ▪ Cyclic data transmission ▪ Block model ▪ Description of the modules

PROFIBUS PA

Manufacturer ID	0x11
Ident number	0x156C
Profile version	3.02
Device description files (GSD, DTM, DD)	Information and files under: ▪ www.endress.com ▪ www.profibus.org

Supported functions	▪ Identification & Maintenance Simplest device identification on the part of the control system and nameplate ▪ PROFIBUS upload/download Reading and writing parameters is up to ten times faster with PROFIBUS upload/download ▪ Condensed status Simplest and self-explanatory diagnostic information by categorizing diagnostic messages that occur
Configuration of the device address	▪ DIP switches on the I/O electronics module ▪ Local display ▪ Via operating tools (e.g. FieldCare)
Compatibility with earlier model	If the device is replaced, the measuring device Promag 500 supports the compatibility of the cyclic data with previous models. It is not necessary to adjust the engineering parameters of the PROFIBUS network with the Promag 500 GSD file. Earlier models: ▪ Promag 50 PROFIBUS PA ▪ ID No.: 1525 (hex) ▪ Extended GSD file: EH3x1525.gsd ▪ Standard GSD file: EH3_1525.gsd ▪ Promag 53 PROFIBUS PA ▪ ID No.: 1527 (hex) ▪ Extended GSD file: EH3x1527.gsd ▪ Standard GSD file: EH3_1527.gsd Description of the function scope of compatibility: Operating Instructions → 109.
System integration	Information regarding system integration: Operating Instructions → 109. ▪ Cyclic data transmission ▪ Block model ▪ Description of the modules

Modbus RS485

Protocol	Modbus Applications Protocol Specification V1.1
Response times	▪ Direct data access: typically 25 to 50 ms ▪ Auto-scan buffer (data range): typically 3 to 5 ms
Device type	Slave
Slave address range	1 to 247
Broadcast address range	0
Function codes	▪ 03: Read holding register ▪ 04: Read input register ▪ 06: Write single registers ▪ 08: Diagnostics ▪ 16: Write multiple registers ▪ 23: Read/write multiple registers
Broadcast messages	Supported by the following function codes: ▪ 06: Write single registers ▪ 16: Write multiple registers ▪ 23: Read/write multiple registers
Supported baud rate	▪ 1 200 BAUD ▪ 2 400 BAUD ▪ 4 800 BAUD ▪ 9 600 BAUD ▪ 19 200 BAUD ▪ 38 400 BAUD ▪ 57 600 BAUD ▪ 115 200 BAUD
Data transfer mode	▪ ASCII ▪ RTU

Data access	Each device parameter can be accessed via Modbus RS485. For Modbus register information
Compatibility with earlier model	If the device is replaced, the measuring device Promag 500 supports the compatibility of the Modbus registers for the process variables and the diagnostic information with the previous model Promag 53. It is not necessary to change the engineering parameters in the automation system. Description of the function scope of compatibility: Operating Instructions → 109.
System integration	Information on system integration: Operating Instructions → 109. ▪ Modbus RS485 information ▪ Function codes ▪ Register information ▪ Response time ▪ Modbus data map

EtherNet/IP

Protocol	▪ The CIP Networks Library Volume 1: Common Industrial Protocol ▪ The CIP Networks Library Volume 2: EtherNet/IP Adaptation of CIP
Communication type	▪ 10Base-T ▪ 100Base-TX
Device profile	Generic device (product type: 0x2B)
Manufacturer ID	0x11
Device type ID	0x103C
Baud rates	Automatic $^{10}/_{100}$ Mbit with half-duplex and full-duplex detection
Polarity	Auto-polarity for automatic correction of crossed TxD and RxD pairs
Supported CIP connections	Max. 3 connections
Explicit connections	Max. 6 connections
I/O connections	Max. 6 connections (scanner)
Configuration options for measuring device	▪ DIP switches on the electronics module for IP addressing ▪ Manufacturer-specific software (FieldCare) ▪ Add-on Profile Level 3 for Rockwell Automation control systems ▪ Web browser ▪ Electronic Data Sheet (EDS) integrated in the measuring device
Configuration of the EtherNet interface	▪ Speed: 10 MBit, 100 MBit, auto (factory setting) ▪ Duplex: half-duplex, full-duplex, auto (factory setting)
Configuration of the device address	▪ DIP switches on the electronics module for IP addressing (last octet) ▪ DHCP ▪ Manufacturer-specific software (FieldCare) ▪ Add-on Profile Level 3 for Rockwell Automation control systems ▪ Web browser ▪ EtherNet/IP tools, e.g. RSLinx (Rockwell Automation)
Device Level Ring (DLR)	Yes
System integration	Information regarding system integration: Operating Instructions → 109. ▪ Cyclic data transmission ▪ Block model ▪ Input and output groups

PROFINET

Protocol	Application layer protocol for decentral device periphery and distributed automation, Version 2.3
Communication type	100 MBit/s

Conformity class	Conformance Class B
Netload Class	Netload Class II
Baud rates	Automatic 100 Mbit/s with full-duplex detection
Cycle times	From 8 ms
Polarity	Auto-polarity for automatic correction of crossed TxD and RxD pairs
Media Redundancy Protocol (MRP)	Yes
System redundancy support	System redundancy S2 (2 AR with 1 NAP)
Device profile	Application interface identifier 0xF600 Generic device
Manufacturer ID	0x11
Device type ID	0x843C
Device description files (GSD, DTM, DD)	Information and files under: ▪ www.endress.com On the product page for the device: Documents/Software → Device drivers ▪ www.profibus.org
Supported connections	▪ 2 x AR (IO Controller AR) ▪ 1 x AR (IO-Supervisor Device AR connection allowed) ▪ 1 x Input CR (Communication Relation) ▪ 1 x Output CR (Communication Relation) ▪ 1 x Alarm CR (Communication Relation)
Configuration options for measuring device	▪ DIP switches on the electronics module, for device name assignment (last part) ▪ Manufacturer-specific software (FieldCare, DeviceCare) ▪ Web browser ▪ Device master file (GSD), can be read out via the integrated Web server of the measuring device
Configuration of the device name	▪ DIP switches on the electronics module, for device name assignment (last part) ▪ DCP protocol ▪ Process Device Manager (PDM) ▪ Integrated Web server
Supported functions	▪ Identification & Maintenance Simple device identification via: ▪ Control system ▪ Nameplate ▪ Measured value status The process variables are communicated with a measured value status ▪ Blinking feature via the onsite display for simple device identification and assignment ▪ Device operation via operating tools (e.g. FieldCare, DeviceCare, SIMATIC PDM)
System integration	Information regarding system integration: Operating Instructions → 109. ▪ Cyclic data transmission ▪ Overview and description of the modules ▪ Status coding ▪ Startup configuration ▪ Factory setting

Power supply

Terminal assignment

Transmitter: supply voltage, input/outputs

HART

Supply voltage		Input/output 1		Input/output 2		Input/output 3		Input/output 4	
1 (+)	2 (–)	26 (+)	27 (–)	24 (+)	25 (–)	22 (+)	23 (–)	20 (+)	21 (–)
		Device-specific terminal assignment: adhesive label in terminal cover.→ 🖹 13.							

FOUNDATION Fieldbus

Supply voltage		Input/output 1		Input/output 2		Input/output 3		Input/output 4	
1 (+)	2 (–)	26 (A)	27 (B)	24 (+)	25 (–)	22 (+)	23 (–)	20 (+)	21 (–)
		Device-specific terminal assignment: adhesive label in terminal cover. → 🖹 13.							

PROFIBUS DP

Supply voltage		Input/output 1		Input/output 2		Input/output 3		Input/output 4	
1 (+)	2 (–)	26 (B)	27 (A)	24 (+)	25 (–)	22 (+)	23 (–)	20 (+)	21 (–)
		Device-specific terminal assignment: adhesive label in terminal cover. → 🖹 13.							

PROFIBUS PA

Supply voltage		Input/output 1		Input/output 2		Input/output 3		Input/output 4	
1 (+)	2 (–)	26 (B)	27 (A)	24 (+)	25 (–)	22 (+)	23 (–)	20 (+)	21 (–)
		Device-specific terminal assignment: adhesive label in terminal cover. → 🖹 13.							

Modbus RS485

Supply voltage		Input/output 1		Input/output 2		Input/output 3		Input/output 4	
1 (+)	2 (–)	26 (B)	27 (A)	24 (+)	25 (–)	22 (+)	23 (–)	20 (+)	21 (–)
		Device-specific terminal assignment: adhesive label in terminal cover. → 🖹 13.							

EtherNet/IP

Supply voltage		Input/output 1	Input/output 2		Input/output 3		Input/output 4	
1 (+)	2 (–)	EtherNet/IP (RJ45 connector)	24 (+)	25 (–)	22 (+)	23 (–)	20 (+)	21 (–)
			Device-specific terminal assignment: adhesive label in terminal cover.→ 🖹 13.					

PROFINET

Supply voltage		Input/output 1	Input/output 2		Input/output 3		Input/output 4	
1 (+)	2 (–)	PROFINET (RJ45 connector)	24 (+)	25 (–)	22 (+)	23 (–)	20 (+)	21 (–)
			Device-specific terminal assignment: adhesive label in terminal cover. → 🖹 13.					

Transmitter and sensor connection housing: connecting cable

The sensor and transmitter, which are mounted in separate locations, are interconnected by a connecting cable. The cable is connected via the sensor connection housing and the transmitter housing.

Terminal assignment and connection of the connecting cable:
- Proline 500 – digital→ 🖹 33
- Proline 500 → 🖹 33

Device plugs available

Device plugs may not be used in hazardous areas!

Device plugs for fieldbus systems:
Order code for "Input; output 1"
- Option **SA** "FOUNDATION Fieldbus" → 🖹 30
- Option **GA** "PROFIBUS PA" → 🖹 30
- Option **NA** "EtherNet/IP" → 🖹 30
- Option **RA** "PROFINET" → 🖹 30

Device plug for connecting to the service interface:
Order code for "Accessory mounted"
option **NB**, adapter RJ45 M12 (service interface) → 🖹 32

Order code for "Input; output 1", option SA "FOUNDATION Fieldbus"

Order code for "Electrical connection"	Cable entry/connection → 🖹 33	
	2	3
M, 3, 4, 5	7/8" connector	–

Order code for "Input; output 1", option GA "PROFIBUS PA"

Order code for "Electrical connection"	Cable entry/connection → 🖹 33	
	2	3
L, N, P, U	Connector M12 × 1	–

Order code for "Input; output 1", option NA "EtherNet/IP"

Order code for "Electrical connection"	Cable entry/connection → 🖹 33	
	2	3
L, N, P, U	Connector M12 × 1	–
R [1) 2)], S [1) 2)], T [1) 2)], V [1) 2)]	Connector M12 × 1	Connector M12 × 1

1) Cannot be combined with an external WLAN antenna (order code for "Enclosed accessories", option P8) of an RJ45 M12 adapter for the service interface (order code for "Accessories mounted", option NB) or of the remote display and operating module DKX001
2) Suitable for integrating the device in a ring topology.

Order code for "Input; output 1", option RA "PROFINET"

Order code for "Electrical connection"	Cable entry/connection → 🖹 33	
	2	3
L, N, P, U	Connector M12 × 1	–
R [1) 2)], S [1) 2)], T [1) 2)], V [1) 2)]	Connector M12 × 1	Connector M12 × 1

1) Cannot be combined with an external WLAN antenna (order code for "Enclosed accessories", option P8) of an RJ45 M12 adapter for the service interface (order code for "Accessories mounted", option NB) or of the remote display and operating module DKX001.
2) Suitable for integrating the device in a ring topology.

Order code for "Accessory mounted", option NB "Adapter RJ45 M12 (service interface)"

Order code "Accessory mounted"	Cable entry/coupling → 🖹 33	
	Cable entry 2	Cable entry 3
NB	Plug M12 × 1	–

Pin assignment, device plug

FOUNDATION Fieldbus

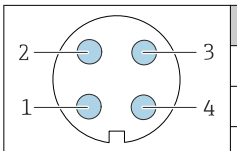

Pin		Assignment	Coding	Plug/socket
1	+	Signal +	A	Plug
2	-	Signal –		
3		Grounding		
4		Not assigned		

PROFIBUS PA

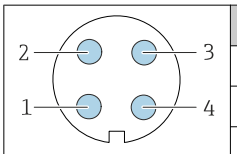

Pin		Assignment	Coding	Plug/socket
1	+	PROFIBUS PA +	A	Plug
2		Grounding		
3	-	PROFIBUS PA –		
4		Not assigned		

PROFINET

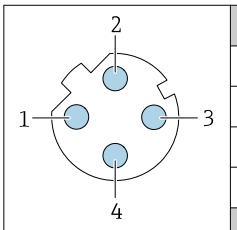

Pin		Assignment
1	+	TD +
2	+	RD +
3	-	TD –
4	-	RD –
Coding		**Plug/socket**
D		Socket

Recommended plug:
- Binder, series 763, part no. 99 3729 810 04
- Phoenix, part no. 1543223 SACC-M12MSD-4Q

EtherNet/IP

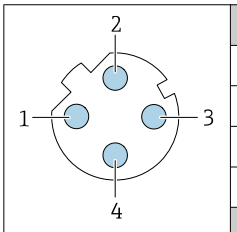

Pin		Assignment
1	+	Tx
2	+	Rx
3	-	Tx
4	-	Rx
Coding		**Plug/socket**
D		Socket

Recommended plug:
- Binder, series 763, part no. 99 3729 810 04
- Phoenix, part no. 1543223 SACC-M12MSD-4Q

Service interface

Order code for "Accessories mounted", option **NB**: Adapter RJ45 M12 (service interface)

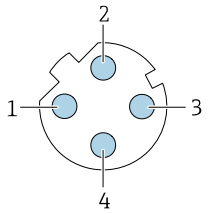

Pin		Assignment
1	+	Tx
2	+	Rx
3	-	Tx
4	-	Rx
Coding		**Plug/socket**
D		Socket

Recommended plug:
- Binder, series 763, part no. 99 3729 810 04
- Phoenix, part no. 1543223 SACC-M12MSD-4Q

Supply voltage

Order code for "Power supply"	Terminal voltage		Frequency range
Option **D**	DC 24 V	±20%	–
Option **E**	AC 100 to 240 V	−15 to +10%	50/60 Hz, ±4 Hz
Option **I**	DC 24 V	±20%	–
	AC 100 to 240 V	−15 to +10%	50/60 Hz, ±4 Hz

Power consumption

Transmitter

Max. 10 W (active power)

switch-on current	Max. 36 A (<5 ms) as per NAMUR Recommendation NE 21

Current consumption

Transmitter

- Max. 400 mA (24 V)
- Max. 200 mA (110 V, 50/60 Hz; 230 V, 50/60 Hz)

Power supply failure

- Totalizers stop at the last value measured.
- Depending on the device version, the configuration is retained in the device memoryor in the pluggable data memory (HistoROM DAT).
- Error messages (incl. total operated hours) are stored.

Electrical connection

Connection of connecting cable: Proline 500 – digital

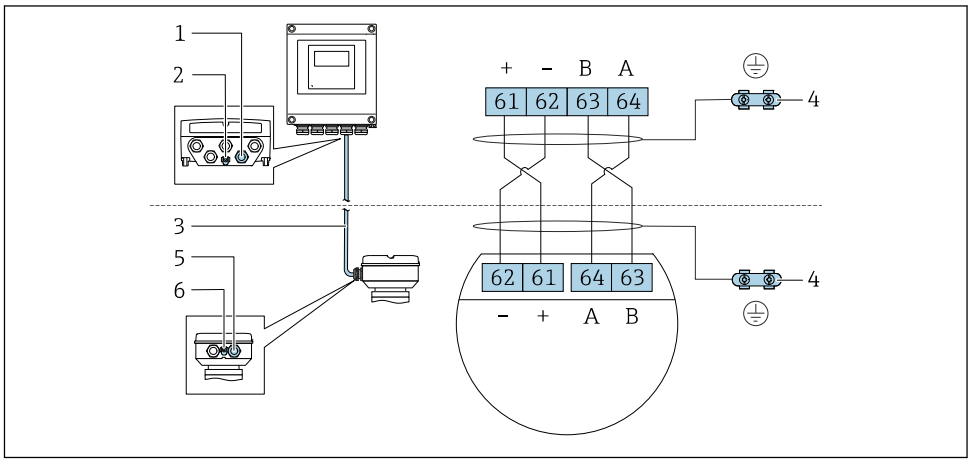

1 *Cable entry for cable on transmitter housing*
2 *Protective ground (PE)*
3 *Connecting cable ISEM communication*
4 *Grounding via ground connection; on device plug versions grounding is through the plug itself*
5 *Cable entry for cable or connection of device plug on sensor connection housing*
6 *Protective ground (PE)*

Connection of the connecting cable: Proline 500

The connecting cable is connected via terminals.

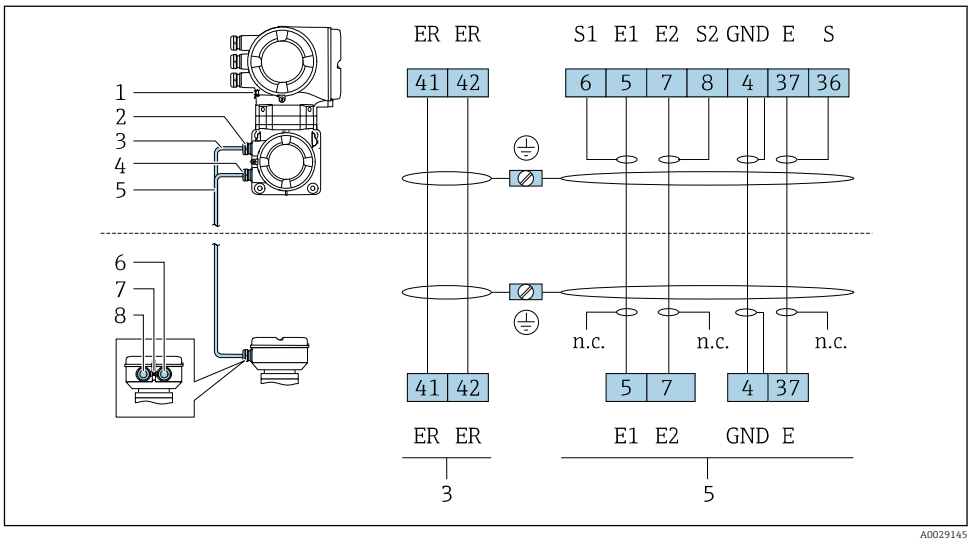

1 *Protective ground (PE)*
2 *Cable entry for coil current cable on transmitter connection housing*
3 *Coil current cable*
4 *Cable entry for signal cable on transmitter connection housing*
5 *Signal cable*
6 *Cable entry for signal cable on sensor connection housing*
7 *Protective ground (PE)*
8 *Cable entry for coil current cable on sensor connection housing*

Connecting the transmitter

- Terminal assignment → 29
- Device plug pin assignment → 31

Connecting the Proline 500 – digital transmitter

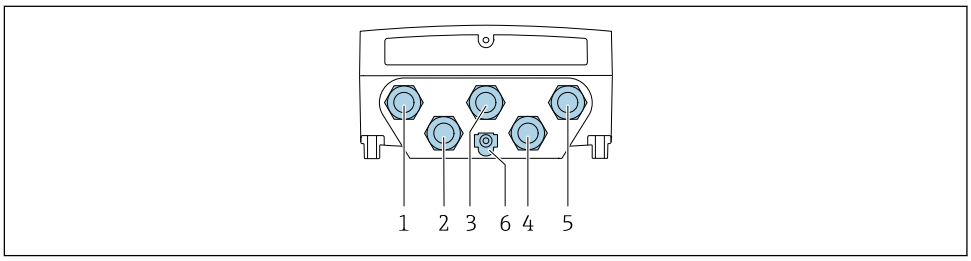

1 Terminal connection for supply voltage
2 Terminal connection for signal transmission, input/output
3 Terminal connection for signal transmission, input/output
4 Terminal connection for connecting cable between sensor and transmitter
5 Terminal connection for signal transmission, input/output or terminal for network connection (DHCP client) via service interface (CDI-RJ45); optional: terminal connection for external WLAN antenna
6 Protective ground (PE)

An adapter for RJ45 and the M12 connector is optionally available:
Order code for "Accessories", option **NB**: "Adapter RJ45 M12 (service interface)"

The adapter connects the service interface (CDI-RJ45) to an M12 connector mounted in the cable entry. Therefore the connection to the service interface can be established via an M12 connector without opening the device.

Network connection (DHCP client) via service interface (CDI-RJ45) → 📄 95

Connecting the Proline 500 transmitter

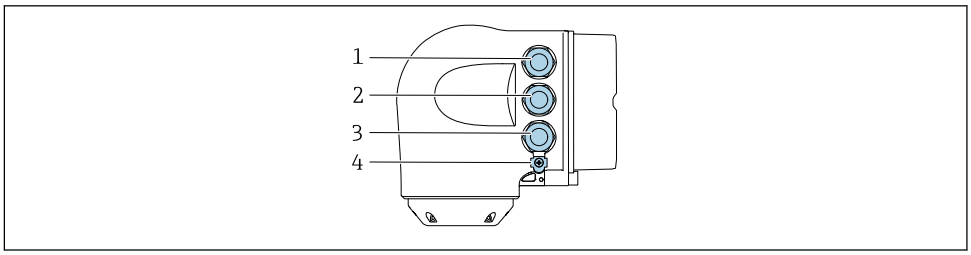

1 Terminal connection for supply voltage
2 Terminal connection for signal transmission, input/output
3 Terminal connection for signal transmission, input/output or terminal for network connection (DHCP client) via service interface (CDI-RJ45); optional: terminal connection for external WLAN antenna
4 Protective ground (PE)

An adapter for RJ45 and the M12 connector is optionally available:
Order code for "Accessories", option **NB**: "Adapter RJ45 M12 (service interface)"

The adapter connects the service interface (CDI-RJ45) to an M12 connector mounted in the cable entry. Therefore the connection to the service interface can be established via an M12 connector without opening the device.

Network connection (DHCP client) via service interface (CDI-RJ45) → 📄 95

Connecting in a ring topology

Device versions with EtherNet/IP and PROFINET communication protocols can be integrated into a ring topology. The device is integrated via the terminal connection for signal transmission (output 1) and the connection to the service interface (CDI-RJ45).

Transmitters with an Ex de approval may **not** be connected via the service interface (CDI-RJ45)! Order code for "Approval transmitter + sensor", options (Ex de):
BB, C2, GB, MB, NB

Integrating the transmitter into a ring topology:
- EtherNet/IP
- PROFINET

Transmitter: Proline 500 – digital

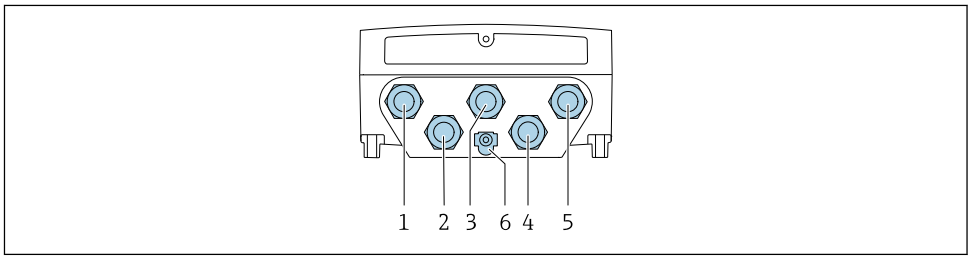

A0028200

1 Terminal connection for supply voltage
2 Terminal connection for signal transmission, input/output
2 Terminal connection for signal transmission: PROFINET or EtherNet/IP (RJ45 connector)
4 Terminal connection for connecting cable between sensor and transmitter
5 Terminal connection to service interface (CDI-RJ45)
6 Protective ground (PE)

Transmitter: Proline 500

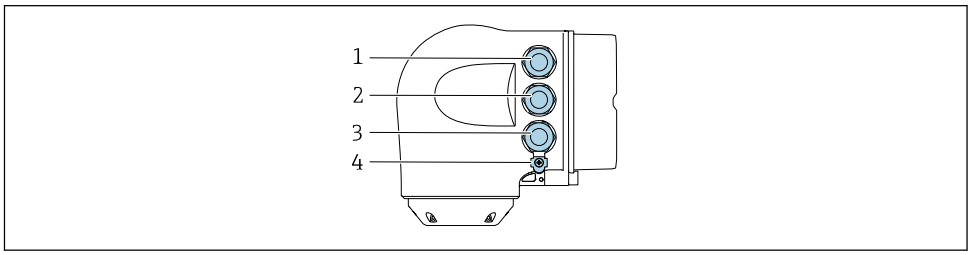

A0026781

1 Terminal connection for supply voltage
2 Terminal connection for signal transmission: PROFINET or EtherNet/IP (RJ45 connector)
3 Terminal connection to service interface (CDI-RJ45)
4 Protective ground (PE)

If the device has additional inputs/outputs, these are routed in parallel via the cable entry for connection to the service interface (CDI-RJ45).

Connection examples

Current output 4 to 20 mA HART

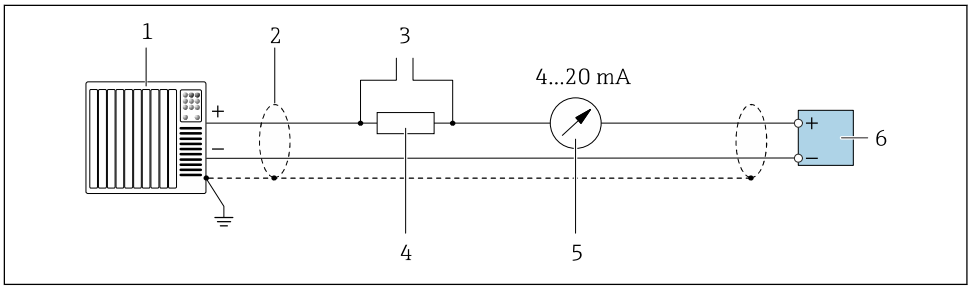

2 Connection example for 4 to 20 mA HART current output (active)

1 *Automation system with current input (e.g. PLC)*
2 *Cable shield provided at one end. The cable shield must be grounded at both ends to comply with EMC requirements; observe cable specifications → 46*
3 *Connection for HART operating devices → 89*
4 *Resistor for HART communication (≥ 250 Ω): observe maximum load → 15*
5 *Analog display unit: observe maximum load → 15*
6 *Transmitter*

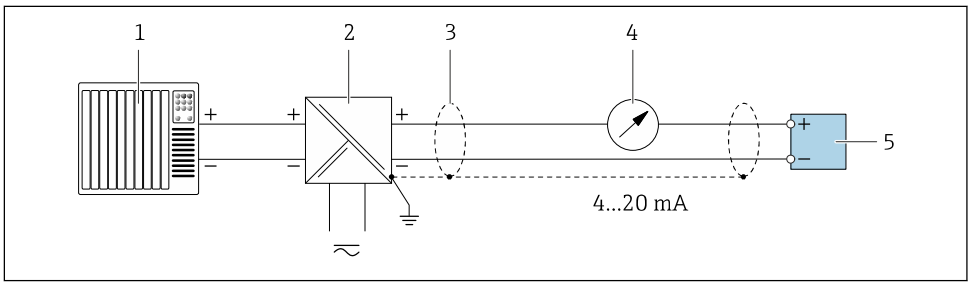

3 Connection example for 4 to 20 mA HART current output (passive)

1 *Automation system with current input (e.g. PLC)*
2 *Power supply*
3 *Cable shield provided at one end. The cable shield must be grounded at both ends to comply with EMC requirements; observe cable specifications → 46*
4 *Analog display unit: observe maximum load → 15*
5 *Transmitter*

HART input

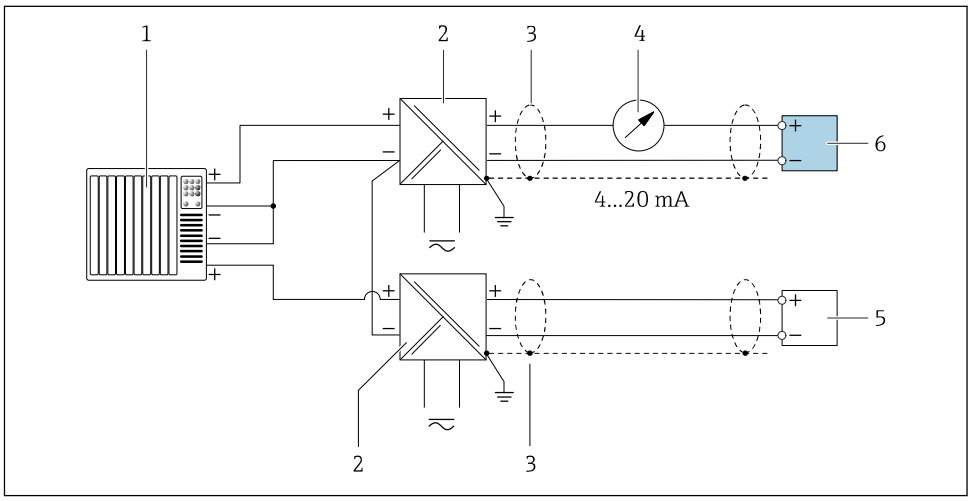

4 Connection example for HART input with a common negative (passive)

1 *Automation system with HART output (e.g. PLC)*
2 *Active barrier for power supply (e.g. RN221N)*
3 *Cable shield provided at one end. The cable shield must be grounded at both ends to comply with EMC requirements; observe cable specifications*
4 *Analog display unit: observe maximum load → 15*
5 *Pressure measuring device (e.g. Cerabar M, Cerabar S): see requirements*
6 *Transmitter*

PROFIBUS PA

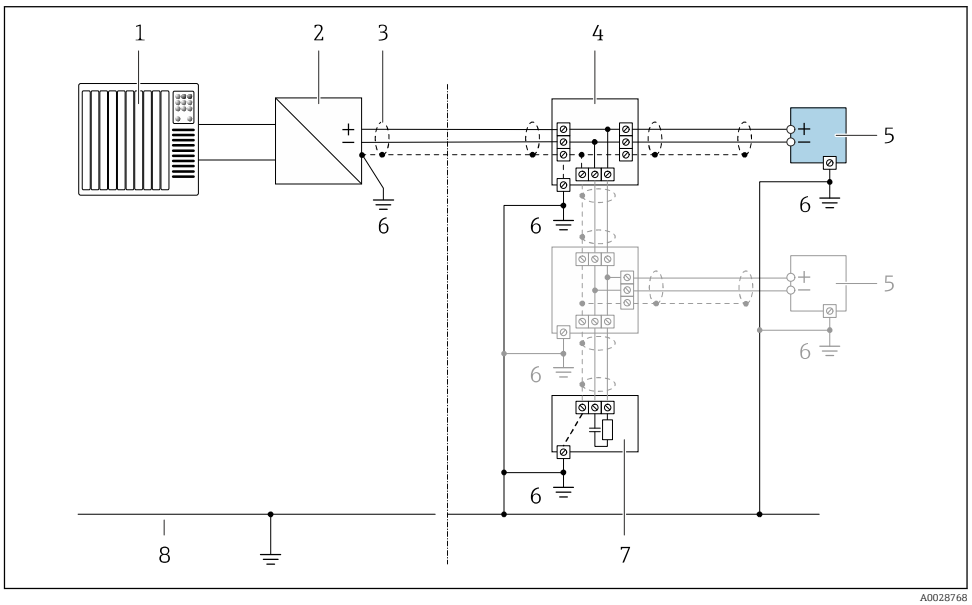

5 Connection example for PROFIBUS PA

1 *Control system (e.g. PLC)*
2 *PROFIBUS PA segment coupler*
3 *Cable shield provided at one end. The cable shield must be grounded at both ends to comply with EMC requirements; observe cable specifications*
4 *T-box*
5 *Measuring device*
6 *Local grounding*
7 *Bus terminator*
8 *Potential matching line*

PROFIBUS DP

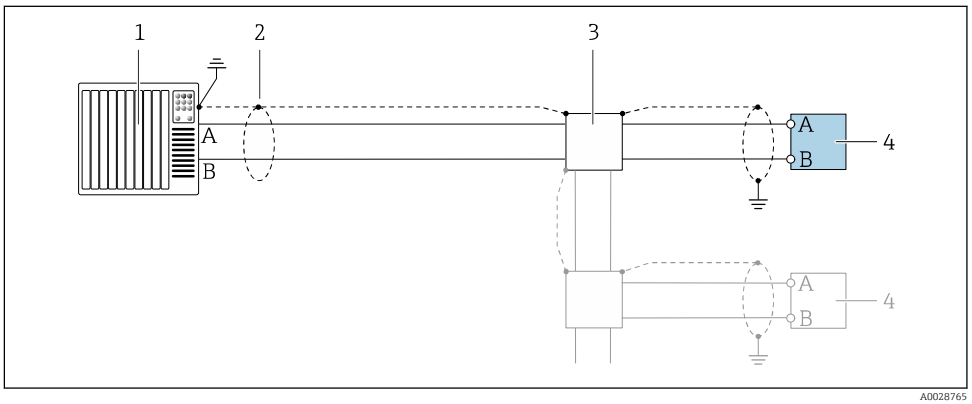

6 *Connection example for PROFIBUS DP, non-hazardous area and Zone 2/Div. 2*

1 *Control system (e.g. PLC)*
2 *Cable shield provided at one end. The cable shield must be grounded at both ends to comply with EMC requirements; observe cable specifications*
3 *Distribution box*
4 *Transmitter*

If baud rates > 1.5 MBaud an EMC cable entry must be used and the cable shield must continue as far as the terminal wherever possible.

EtherNet/IP

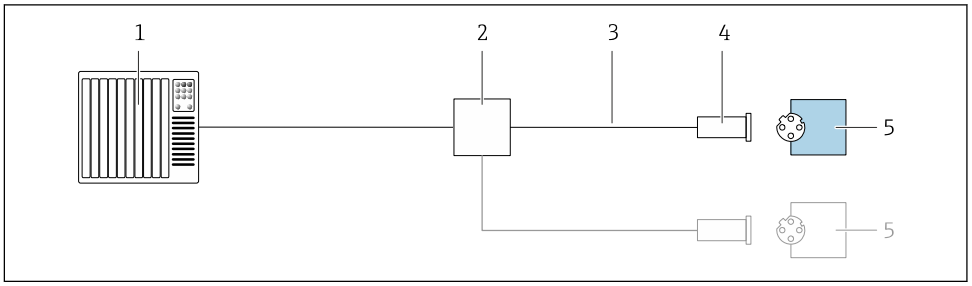

7 *Connection example for EtherNet/IP*

1 *Control system (e.g. PLC)*
2 *Ethernet switch*
3 *Observe cable specifications*
4 *Device plug*
5 *Transmitter*

EtherNet/IP: DLR (Device Level Ring)

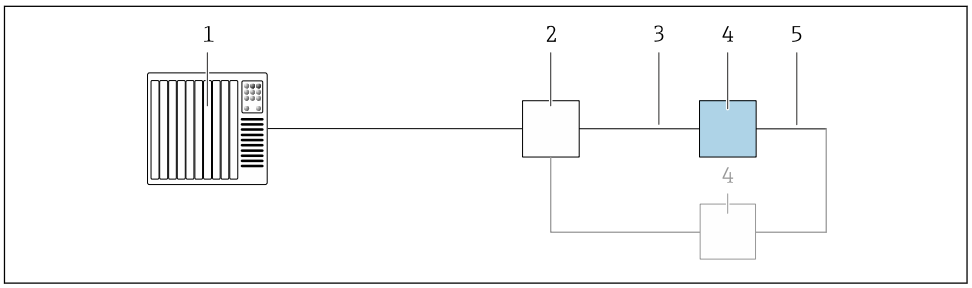

1 Control system (e.g. PLC)
2 Ethernet switch
3 Observe cable specifications → 46
4 Transmitter
5 Connecting cable between the two transmitters

PROFINET

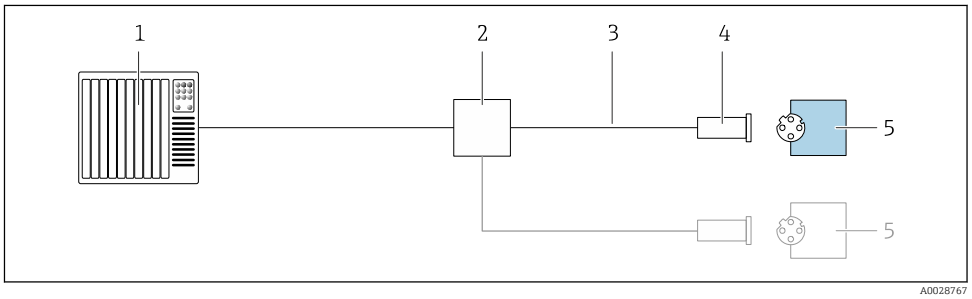

8 Connection example for PROFINET

1 Control system (e.g. PLC)
2 Ethernet switch
3 Observe cable specifications
4 Device plug
5 Transmitter

PROFINET: MRP (Media Redundancy Protocol)

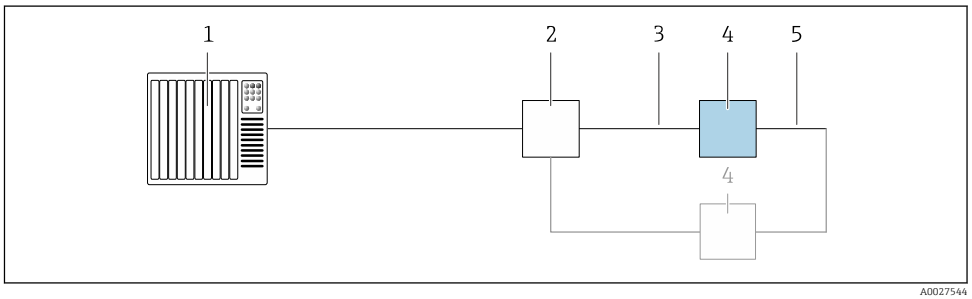

1 Control system (e.g. PLC)
2 Ethernet switch
3 Observe cable specifications → 46
4 Transmitter
5 Connecting cable between the two transmitters

PROFINET: system redundancy S2

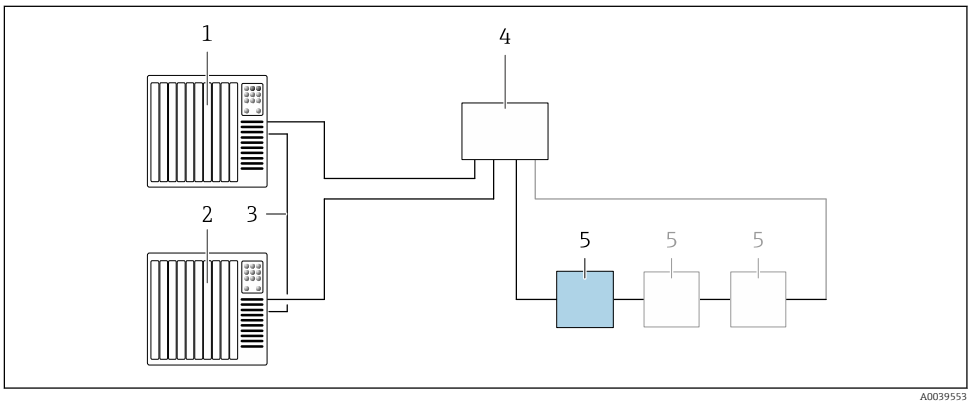

9 Connection example for system redundancy S2

1 *Control system 1 (e.g. PLC)*
2 *Synchronization of control systems*
3 *Control system 2 (e.g. PLC)*
4 *Industrial Ethernet Managed Switch*
5 *Transmitter*

FOUNDATION Fieldbus

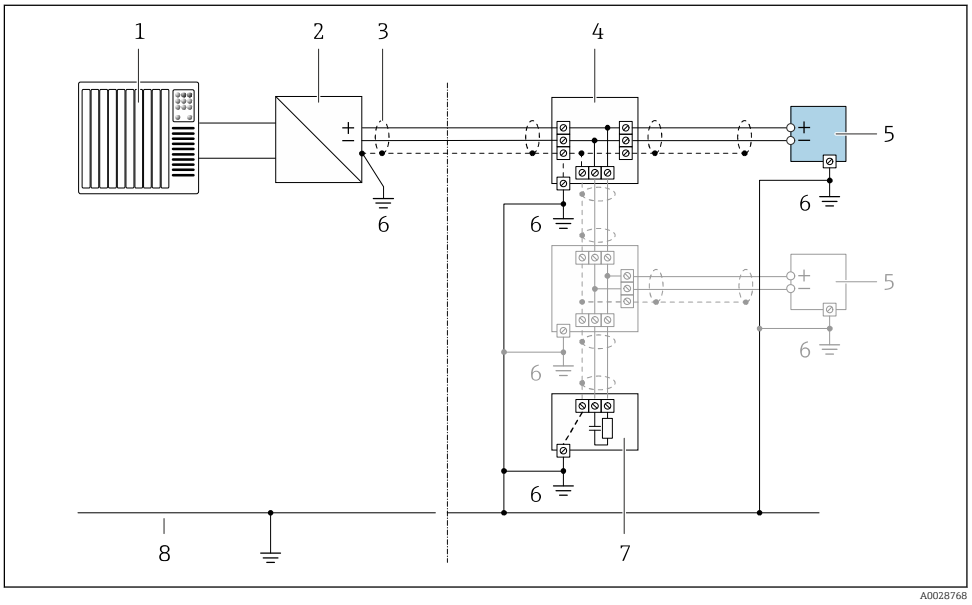

10 Connection example for FOUNDATION Fieldbus

1 *Control system (e.g. PLC)*
2 *Power Conditioner (FOUNDATION Fieldbus)*
3 *Cable shield provided at one end. The cable shield must be grounded at both ends to comply with EMC requirements; observe cable specifications*
4 *T-box*
5 *Measuring device*
6 *Local grounding*
7 *Bus terminator*
8 *Potential matching line*

Modbus RS485

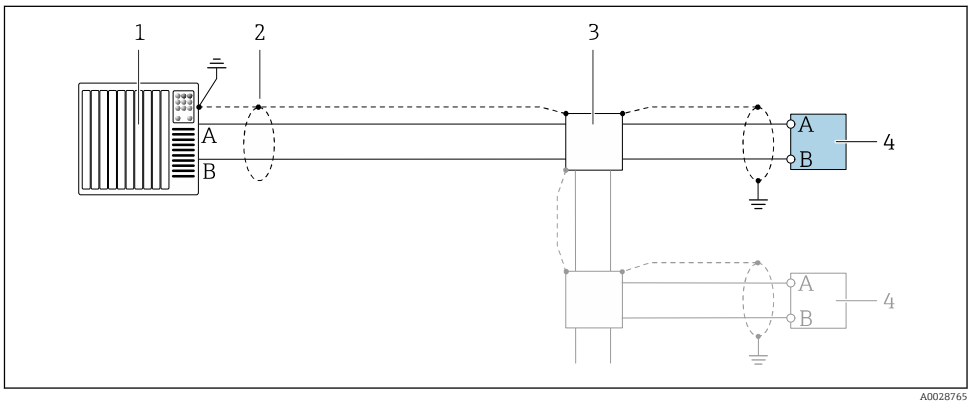

11 Connection example for Modbus RS485, non-hazardous area and Zone 2/Div. 2

1 Control system (e.g. PLC)
2 Cable shield provided at one end. The cable shield must be grounded at both ends to comply with EMC requirements; observe cable specifications
3 Distribution box
4 Transmitter

Current output 4-20 mA

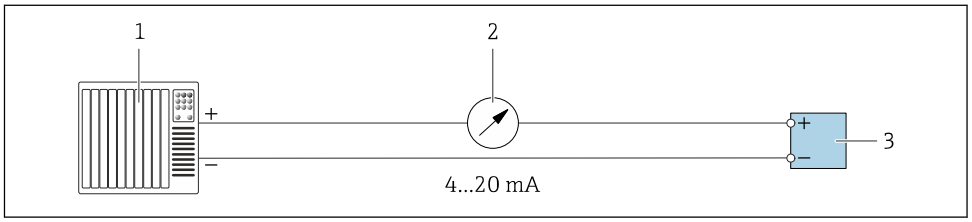

12 Connection example for 4-20 mA current output (active)

1 Automation system with current input (e.g. PLC)
2 Analog display unit: observe maximum load → 15
3 Transmitter

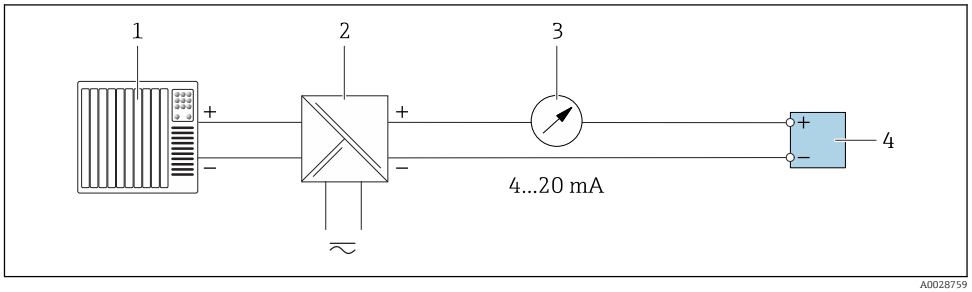

13 Connection example for 4-20 mA current output (passive)

1 Automation system with current input (e.g. PLC)
2 Active barrier for power supply (e.g. RN221N)
3 Analog display unit: observe maximum load → 15
4 Transmitter

Pulse/frequency output

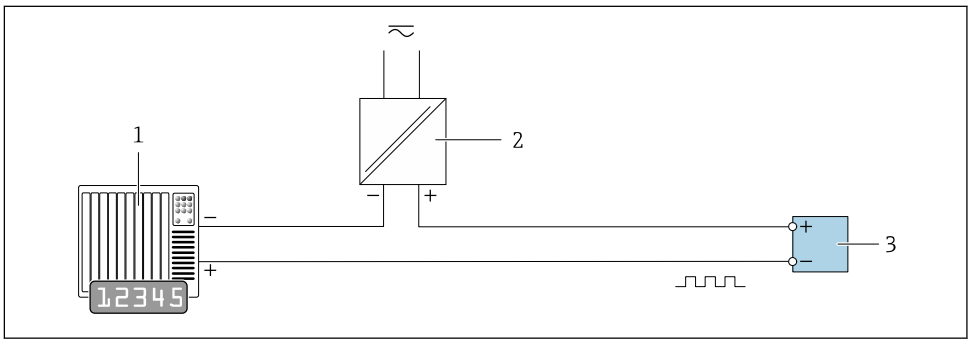

14 Connection example for pulse/frequency output (passive)

1 Automation system with pulse/frequency input (e.g. PLC)
2 Power supply
3 Transmitter: Observe input values → 17

Switch output

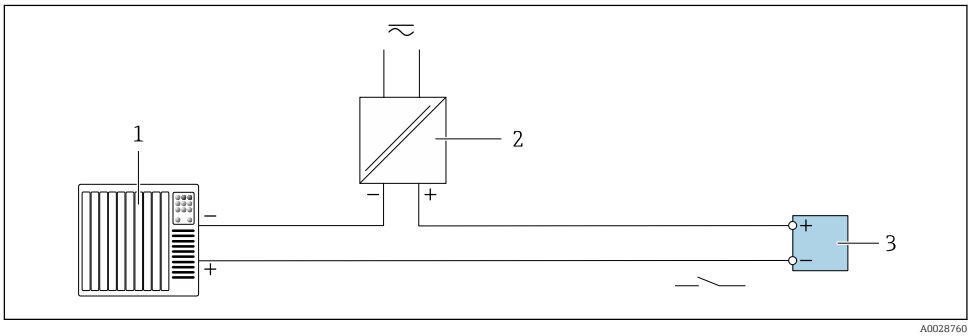

15 Connection example for switch output (passive)

1 Automation system with switch input (e.g. PLC)
2 Power supply
3 Transmitter: Observe input values → 17

Double pulse output

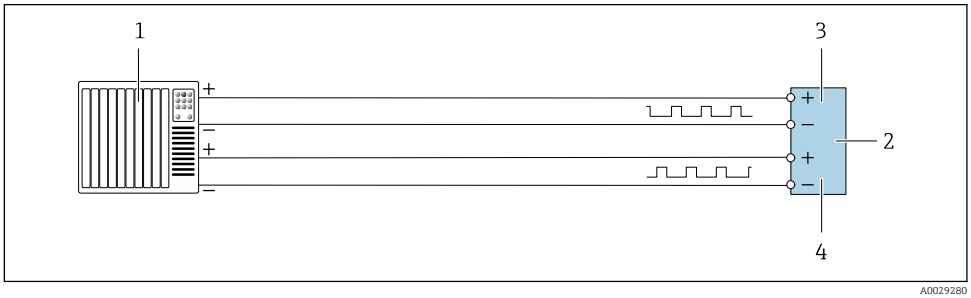

16 Connection example for double pulse output (active)

1 Automation system with double pulse input (e.g. PLC)
2 Transmitter: Observe input values → 18
3 Double pulse output
4 Double pulse output (slave), phase-shifted

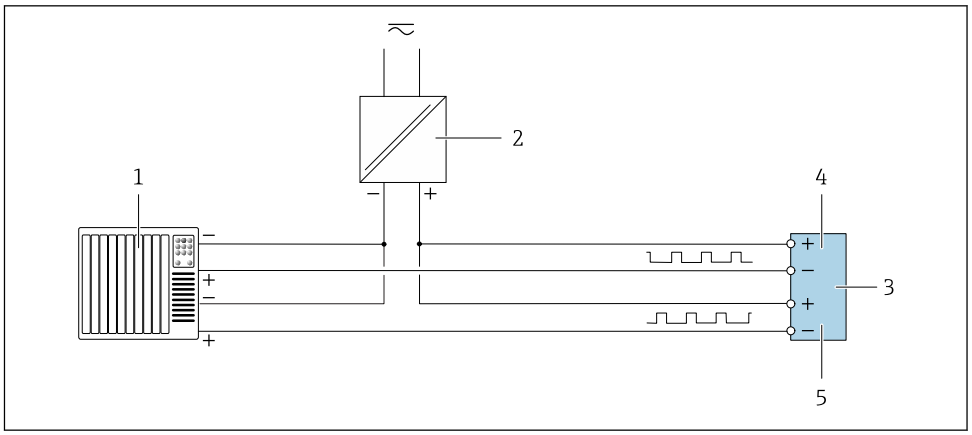

17 *Connection example for double pulse output (passive)*

1 *Automation system with double pulse input (e.g. PLC)*
2 *Power supply*
3 *Transmitter: Observe input values → 18*
4 *Double pulse output*
5 *Double pulse output (slave), phase-shifted*

Relay output

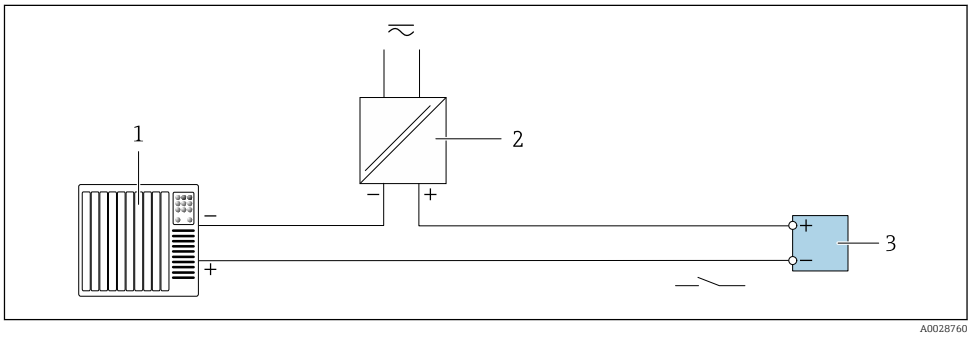

18 *Connection example for relay output (passive)*

1 *Automation system with relay input (e.g. PLC)*
2 *Power supply*
3 *Transmitter: Observe input values → 19*

Current input

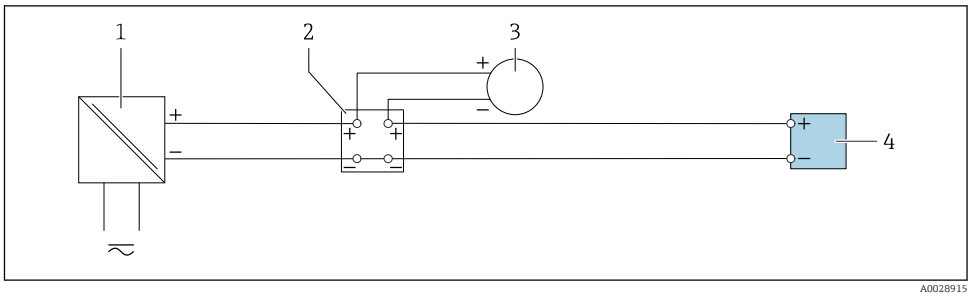

19 *Connection example for 4 to 20 mA current input*

1 *Power supply*
2 *Terminal box*
3 *External measuring device (to read in pressure or temperature, for instance)*
4 *Transmitter*

Status input

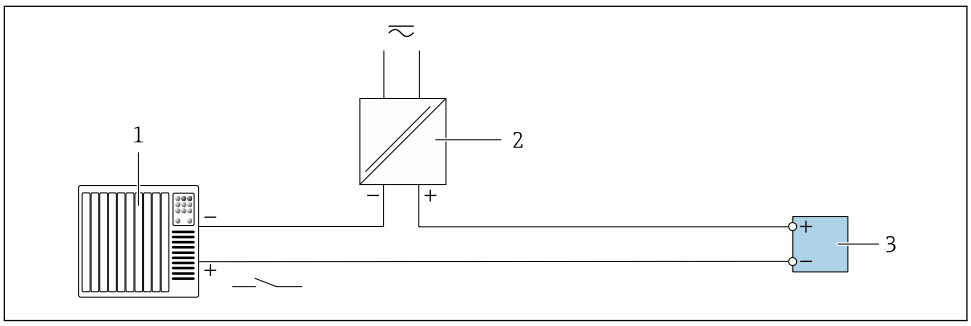

20 *Connection example for status input*

1 *Automation system with status output (e.g. PLC)*
2 *Power supply*
3 *Transmitter*

Potential equalization

Requirements

Please consider the following to ensure correct measurement:
- Same electrical potential for the fluid and sensor
- Company-internal grounding concepts
- Pipe material and grounding

Connection example, standard scenario

Metal, grounded pipe

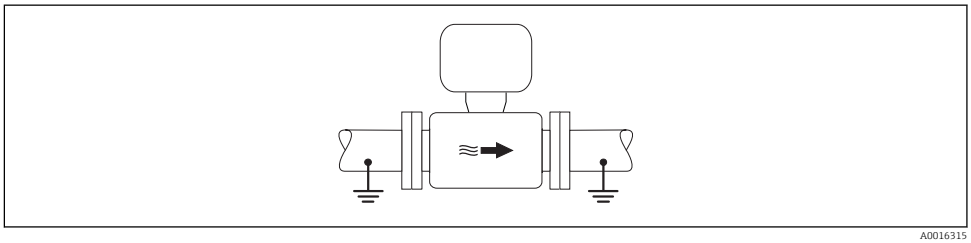

21 *Potential equalization via measuring tube*

Connection example in special situations

Unlined and ungrounded metal pipe

This connection method also applies in situations where:
- The customary potential equalization is not used
- Equalizing currents are present

Ground cable	Copper wire, at least 6 mm² (0.0093 in²)

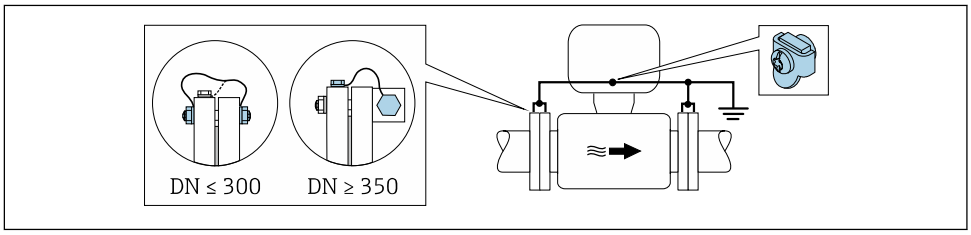

22 *Potential equalization via ground terminal and pipe flanges*

Note the following when installing:
- Connect both sensor flanges to the pipe flange via a ground cable and ground them.
- Connect the connection housing of the transmitter or sensor to ground potential by means of the ground terminal provided for the purpose. To mount the ground cable:
  - If DN ≤ 300 (12"): Mount the ground cable directly on the conductive flange coating of the sensor with the flange screws.
  - If DN ≥ 350 (14"): Mount the ground cable directly on the metal transport bracket.

You can order the necessary ground cable from Endress+Hauser: → 106.

Plastic pipe or pipe with insulating liner

This connection method also applies in situations where:
- Standard company potential equalization cannot be guaranteed
- Equalizing currents can be expected

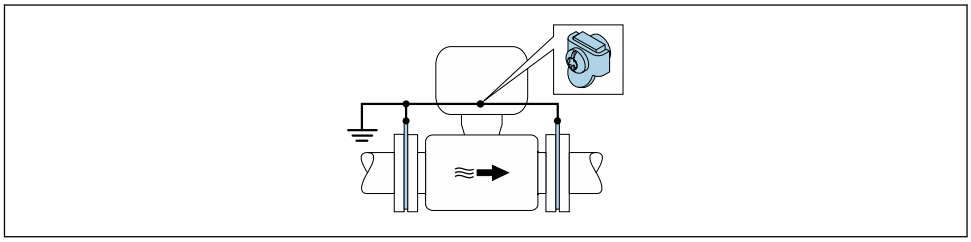

A0029339

23 Potential equalization via ground terminal and ground disks

Note the following when installing:
The ground disks must be connected to the ground terminal via the ground cable and be connected to ground potential.

The ground cable and ground disks can be ordered from Endress+Hauser → 106.

Pipe with a cathodic protection unit

This connection method is only used if the following two conditions are met:
- Metal pipe without liner or pipe with electrically conductive liner
- Cathodic protection is integrated in the personal protection equipment

Ground cable	Copper wire, at least 6 mm² (0.0093 in²)

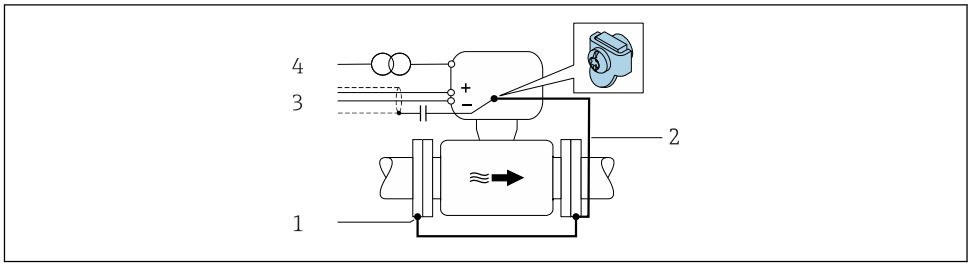

A0030377

1 Connection of the two flanges of the pipe via a ground cable
2 Signal line shielding via a capacitor
3 Measuring device connected to power supply such that it is floating in relation to the protective ground (isolation transformer)

Note the following when installing:
The sensor is installed in the pipe in a way that provides electrical insulation.

You can order the necessary ground cable from Endress+Hauser: → 106.

Terminals

Spring-loaded terminals: Suitable for strands and strands with ferrules.
Conductor cross-section 0.2 to 2.5 mm² (24 to 12 AWG).

Cable entries

- Cable gland: M20 × 1.5 with cable Ø 6 to 12 mm (0.24 to 0.47 in)
- Thread for cable entry:
  - NPT ½"
  - G ½"
  - M20
- Device plug for digital communication: M12
  Only available for certain device versions → 30.

Cable specification

Permitted temperature range

- The installation guidelines that apply in the country of installation must be observed.
- The cables must be suitable for the minimum and maximum temperatures to be expected.

Power supply cable (incl. conductor for the inner ground terminal)

Standard installation cable is sufficient.

Protective grounding cable for the outer ground terminal

Conductor cross-section ≤2.08 mm² (14 AWG)

Grounding impedance must be less than 2 Ω.

Signal cable

Current output 4 to 20 mA HART

A shielded cable is recommended. Observe grounding concept of the plant.

PROFIBUS PA

Twisted, shielded two-wire cable. Cable type A is recommended .

For further information on planning and installing PROFIBUS networks see:
- Operating Instructions "PROFIBUS DP/PA: Guidelines for planning and commissioning" (BA00034S)
- PNO Directive 2.092 "PROFIBUS PA User and Installation Guideline"
- IEC 61158-2 (MBP)

PROFIBUS DP

The IEC 61158 standard specifies two types of cable (A and B) for the bus line which can be used for every transmission rate. Cable type A is recommended.

Cable type	A
Characteristic impedance	135 to 165 Ω at a measuring frequency of 3 to 20 MHz
Cable capacitance	< 30 pF/m
Wire cross-section	> 0.34 mm² (22 AWG)
Cable type	Twisted pairs
Loop resistance	≤110 Ω/km
Signal damping	Max. 9 dB over the entire length of the cable cross-section
Shield	Copper braided shielding or braided shielding with foil shield. When grounding the cable shield, observe the grounding concept of the plant.

For further information on planning and installing PROFIBUS networks see:
- Operating Instructions "PROFIBUS DP/PA: Guidelines for planning and commissioning" (BA00034S)
- PNO Directive 2.092 "PROFIBUS PA User and Installation Guideline"
- IEC 61158-2 (MBP)

EtherNet/IP

The standard ANSI/TIA/EIA-568-B.2 Annex specifies CAT 5 as the minimum category for a cable used for EtherNet/IP. CAT 5e and CAT 6 are recommended.

For more information on planning and installing EtherNet/IP networks, please refer to the "Media Planning and Installation Manual. EtherNet/IP" of ODVA Organization

PROFINET

Standard IEC 61156-6 specifies CAT 5 as the minimum category for a cable used for PROFINET. CAT 5e and CAT 6 are recommended.

For more information on planning and installing PROFINET networks, see: "PROFINET Cabling and Interconnection Technology", Guideline for PROFINET

FOUNDATION Fieldbus

Twisted, shielded two-wire cable.

For further information on planning and installing FOUNDATION Fieldbus networks see:

- Operating Instructions for "FOUNDATION Fieldbus Overview" (BA00013S)
- FOUNDATION Fieldbus Guideline
- IEC 61158-2 (MBP)

Modbus RS485

The EIA/TIA-485 standard specifies two types of cable (A and B) for the bus line which can be used for every transmission rate. Cable type A is recommended.

Cable type	A
Characteristic impedance	135 to 165 Ω at a measuring frequency of 3 to 20 MHz
Cable capacitance	< 30 pF/m
Wire cross-section	> 0.34 mm^2 (22 AWG)
Cable type	Twisted pairs
Loop resistance	≤110 Ω/km
Signal damping	Max. 9 dB over the entire length of the cable cross-section
Shield	Copper braided shielding or braided shielding with foil shield. When grounding the cable shield, observe the grounding concept of the plant.

Current output 0/4 to 20 mA

Standard installation cable is sufficient.

Pulse/frequency/switch output

Standard installation cable is sufficient.

Double pulse output

Standard installation cable is sufficient.

Relay output

Standard installation cable is sufficient.

Current input 0/4 to 20 mA

Standard installation cable is sufficient.

Status input

Standard installation cable is sufficient.

Choice of connecting cable between the transmitter and sensor

Depends on the type of transmitter and the installation zones

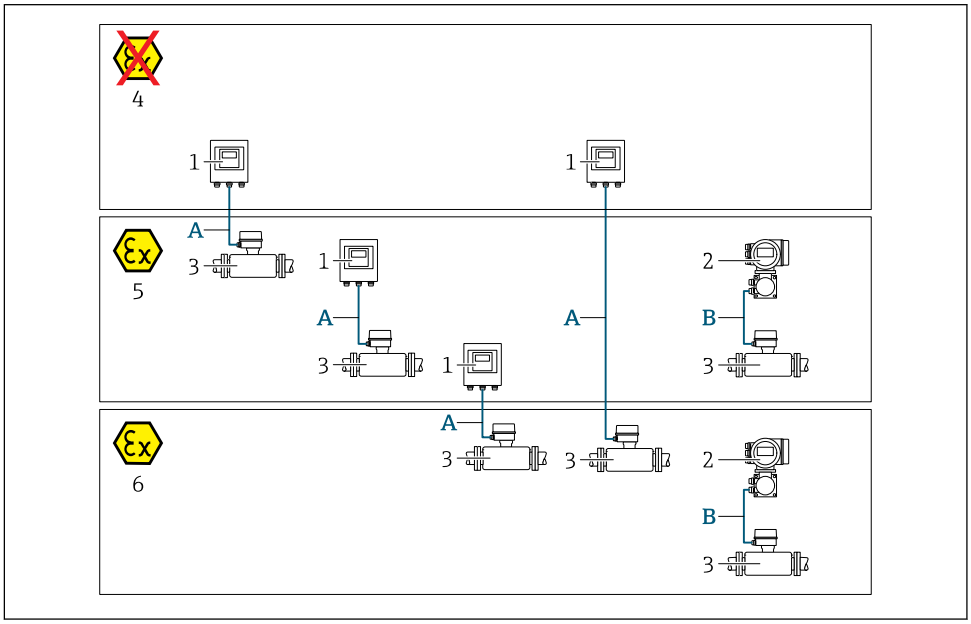

1 Proline 500 digital transmitter
2 Proline 500 transmitter
3 Promag sensor
4 Non-hazardous area
5 Hazardous area: Zone 2; Class I, Division 2
6 Hazardous area: Zone 1; Class I, Division 1
A Standard cable to 500 digital transmitter → 48
Transmitter installed in the non-hazardous area or hazardous area: Zone 2; Class I, Division 2 / sensor installed in the hazardous area: Zone 2; Class I, Division 2 or Zone 1; Class I, Division 1
B Signal cable to 500 transmitter → 49
Transmitter and sensor installed in the hazardous area: Zone 2; Class I, Division 2 oder Zone 1; Class I, Division 1

A: Connecting cable between sensor and transmitter: Proline 500 – digital

Standard cable

A standard cable with the following specifications can be used as the connecting cable.

Design	4 cores (2 pairs); uninsulated stranded CU wires; pair-stranded with common shield
Shielding	Tin-plated copper-braid, optical cover ≥ 85 %
Cable length	Maximum 300 m (1000 ft), see the following table.

Cross-section	**Cable lengths for use in**	
	Non-hazardous area, Hazardous area: Zone 2; Class I, Division 2	**Hazardous area: Zone 1; Class I, Division 1**
0.34 mm² (AWG 22)	80 m (270 ft)	50 m (165 ft)
0.50 mm² (AWG 20)	120 m (400 ft)	60 m (200 ft)
0.75 mm² (AWG 18)	180 m (600 ft)	90 m (300 ft)
1.00 mm² (AWG 17)	240 m (800 ft)	120 m (400 ft)

Cross-section	Cable lengths for use in	
	Non-hazardous area, Hazardous area: Zone 2; Class I, Division 2	Hazardous area: Zone 1; Class I, Division 1
1.50 mm² (AWG 15)	300 m (1 000 ft)	180 m (600 ft)
2.50 mm² (AWG 13)	300 m (1 000 ft)	300 m (1 000 ft)

Optionally available connecting cable

Design	2 × 2 × 0.34 mm² (AWG 22) PVC cable [1] with common shield (2 pairs, uninsulated stranded CU wires; pair-stranded)
Flame resistance	According to DIN EN 60332-1-2
Oil-resistance	According to DIN EN 60811-2-1
Shielding	Tin-plated copper-braid, optical cover ≥ 85 %
Operating temperature	When mounted in a fixed position: −50 to +105 °C (−58 to +221 °F); when cable can move freely: −25 to +105 °C (−13 to +221 °F)
Available cable length	Fixed: 20 m (65 ft); variable: up to maximum 50 m (165 ft)

1) UV radiation can impair the cable outer sheath. Protect the cable from direct sunshine where possible.

B: Connecting cable between sensor and transmitter: Proline 500

Signal cable

Design	3 × 0.38 mm² (20 AWG) with common, braided copper shield (Ø ~ 9.5 mm (0.37 in)) and individual shielded cores
Conductor resistance	≤50 Ω/km (0.015 Ω/ft)
Capacitance: core/shield	≤420 pF/m (128 pF/ft)
Cable length (max.)	Depends on the medium conductivity, max. 200 m (656 ft)
Cable lengths (available for order)	5 m (15 ft), 10 m (32 ft), 20 m (65 ft) or variable length up to max. 200 m (656 ft)
Operating temperature	−20 to +80 °C (−4 to +176 °F)

Coil current cable

Design	3 × 0.75 mm² (18 AWG) with common, braided copper shield (Ø ~ 9 mm (0.35 in)) and individual shielded cores
Conductor resistance	≤37 Ω/km (0.011 Ω/ft)
Capacitance: core/core, shield grounded	≤120 pF/m (37 pF/ft)
Cable length (max.)	Depends on the medium conductivity, max. 200 m (656 ft)
Cable lengths (available for order)	5 m (15 ft), 10 m (32 ft), 20 m (65 ft) or variable length up to max. 200 m (656 ft)
Operating temperature	−20 to +80 °C (−4 to +176 °F)
Test voltage for cable insulation	≤ AC 1433 V rms 50/60 Hz or ≥ DC 2026 V

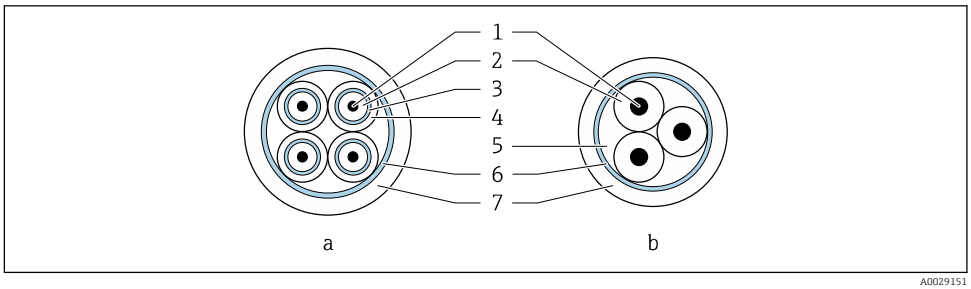

24 Cable cross-section

a Electrode cable
b Coil current cable
1 Core
2 Core insulation
3 Core shield
4 Core jacket
5 Core reinforcement
6 Cable shield
7 Outer jacket

Operation in zones of severe electrical interference

The measuring system meets the general safety requirements → 104 and EMC specifications → 59.

Grounding is by means of the ground terminal provided for the purpose inside the connection housing. The stripped and twisted lengths of cable shield to the ground terminal must be as short as possible.

Performance characteristics

Reference operating conditions

- Error limits following DIN EN 29104, in future ISO 20456
- Water, typically: +15 to +45 °C (+59 to +113 °F); 0.5 to 7 bar (73 to 101 psi)
- Data as indicated in the calibration protocol
- Accuracy based on accredited calibration rigs according to ISO 17025

Maximum measured error

o.r. = of reading

Error limits under reference operating conditions

Volume flow

- ±0.5 % o.r. ± 1 mm/s (0.04 in/s)
- Optional: ±0.2 % o.r. ± 2 mm/s (0.08 in/s)

Fluctuations in the supply voltage do not have any effect within the specified range.

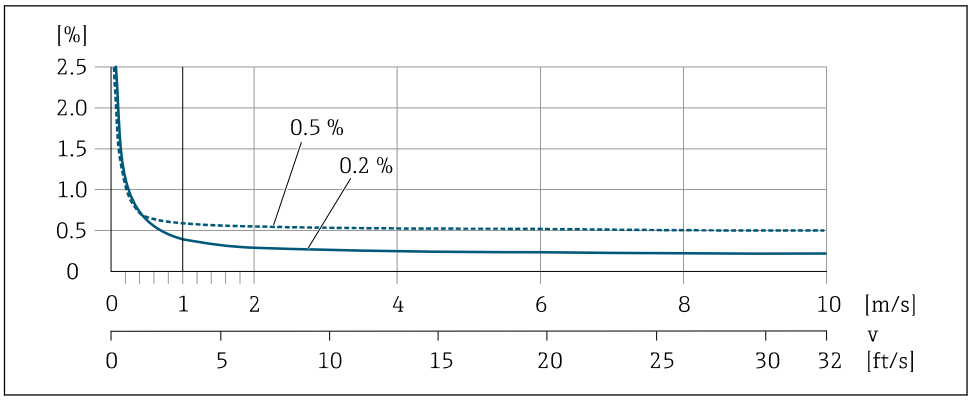

25 *Maximum measured error in % o.r.*

Electrical conductivity

Max. measured error not specified.

Accuracy of outputs

The outputs have the following base accuracy specifications.

Current output

Accuracy	±5 µA

Pulse/frequency output

o.r. = of reading

Accuracy	Max. ±50 ppm o.r. (over the entire ambient temperature range)

Repeatability

o.r. = of reading

Volume flow
Max. ±0.1 % o.r. ± 0.5 mm/s (0.02 in/s)

Electrical conductivity
Max. ±5 % o.r.

Influence of ambient temperature

Current output

Temperature coefficient	Max. 1 µA/°C

Pulse/frequency output

Temperature coefficient	No additional effect. Included in accuracy.

Installation

Mounting location

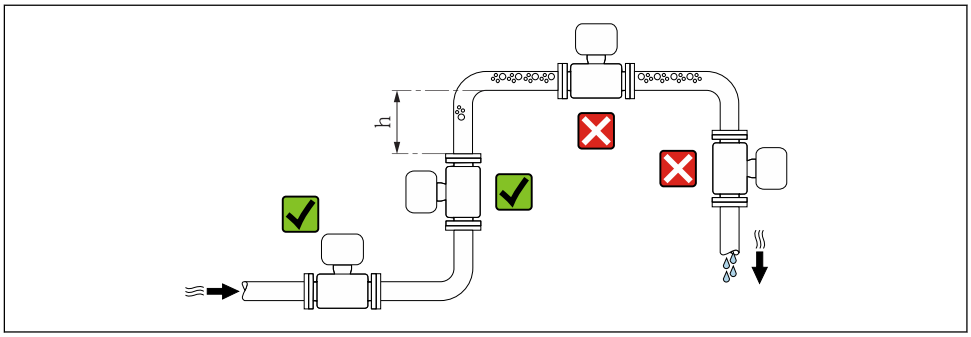

Preferably install the sensor in an ascending pipe, and ensure a sufficient distance to the next pipe elbow: h ≥ 2 × DN.

Installation in down pipes

Install a siphon with a vent valve downstream of the sensor in down pipes whose length h ≥ 5 m (16.4 ft). This precaution is to avoid low pressure and the consequent risk of damage to the measuring tube. This measure also prevents the system losing prime.

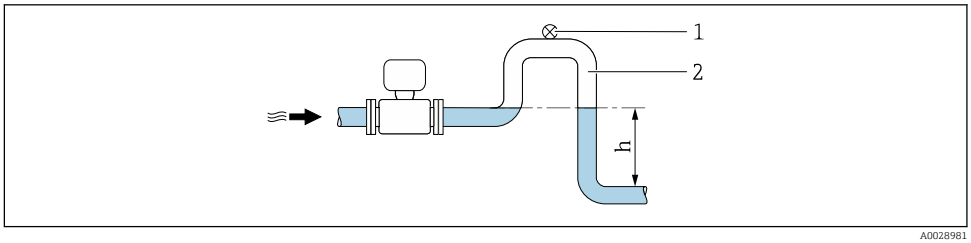

26 *Installation in a down pipe*

1 Vent valve
2 Pipe siphon
h Length of down pipe

Installation in partially filled pipes

A partially filled pipe with a gradient necessitates a drain-type configuration.

No inlet runs necessary with order code for "Design", option C, H, I

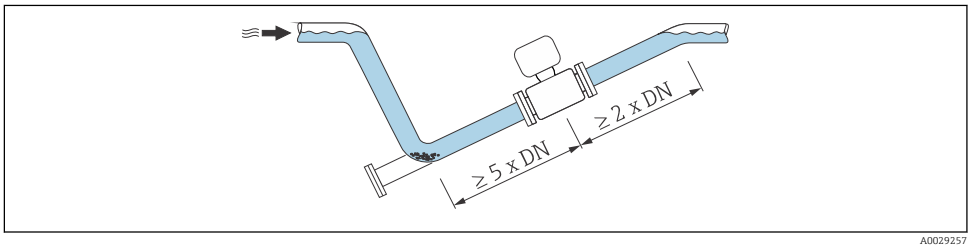

For heavy sensors DN ≥ 350 (14")

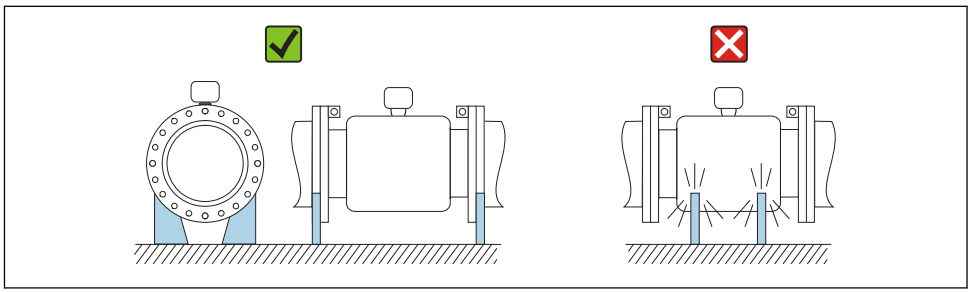

A0016276

Orientation

The direction of the arrow on the sensor nameplate helps you to install the sensor according to the flow direction (direction of medium flow through the piping).

Orientation			Recommendation
A	Vertical orientation	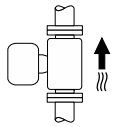 A0015591	✓✓
B	Horizontal orientation, transmitter at top	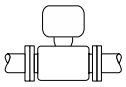 A0015589	✓✓ 1)
C	Horizontal orientation, transmitter at bottom	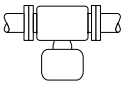 A0015590	✓✓ 2) 3) ✗ 4)
D	Horizontal orientation, transmitter at side	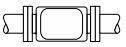 A0015592	✗

1) Applications with low process temperatures may decrease the ambient temperature. To maintain the minimum ambient temperature for the transmitter, this orientation is recommended.
2) Applications with high process temperatures may increase the ambient temperature. To maintain the maximum ambient temperature for the transmitter, this orientation is recommended.
3) To prevent the electronics module from overheating in the case of a sharp rise in temperature (e.g. CIP or SIP processes), install the device with the transmitter component pointing downwards.
4) With the empty pipe detection function switched on: empty pipe detection only works if the transmitter housing is pointing upwards.

Horizontal

- Ideally, the measuring electrode plane should be horizontal. This prevents brief insulation of the measuring electrodes by entrained air bubbles.
- Empty pipe detection only works if the transmitter housing is pointing upwards as otherwise there is no guarantee that the empty pipe detection function will actually respond to a partially filled or empty measuring tube.

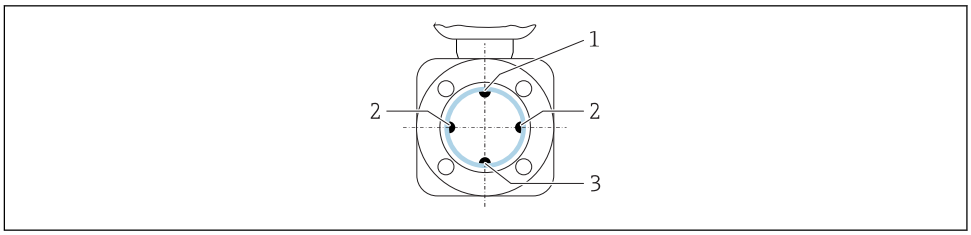

1 EPD electrode for empty pipe detection
2 Measuring electrodes for signal detection
3 Reference electrode for potential equalization

Measuring devices with tantalum or platinum electrodes can be ordered without an EPD electrode. In this case, empty pipe detection is performed via the measuring electrodes.

Inlet and outlet runs

If possible, install the sensor upstream from fittings such as valves, T-pieces or elbows.

Observe the following inlet and outlet runs to comply with accuracy specifications:

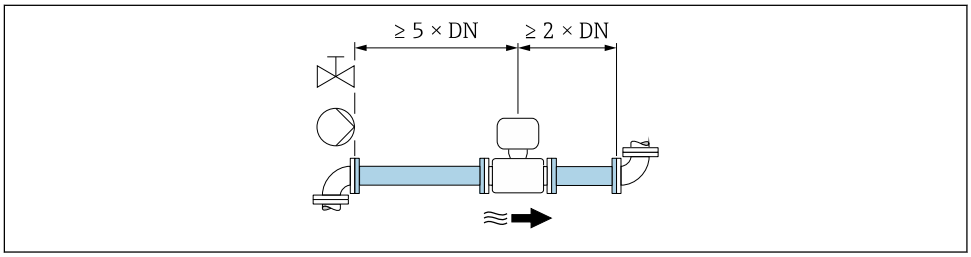

Adapters

Suitable adapters to DIN EN 545 (double-flange reducers) can be used to install the sensor in larger-diameter pipes. The resultant increase in the rate of flow improves measuring accuracy with very slow-moving fluids.

The nomogram shown here can be used to calculate the pressure loss caused by reducers and expanders:
- Calculate the ratio of the diameters d/D.
- From the nomogram read off the pressure loss as a function of flow velocity (downstream from the reduction) and the d/D ratio.

The nomogram only applies to liquids with a viscosity similar to that of water.

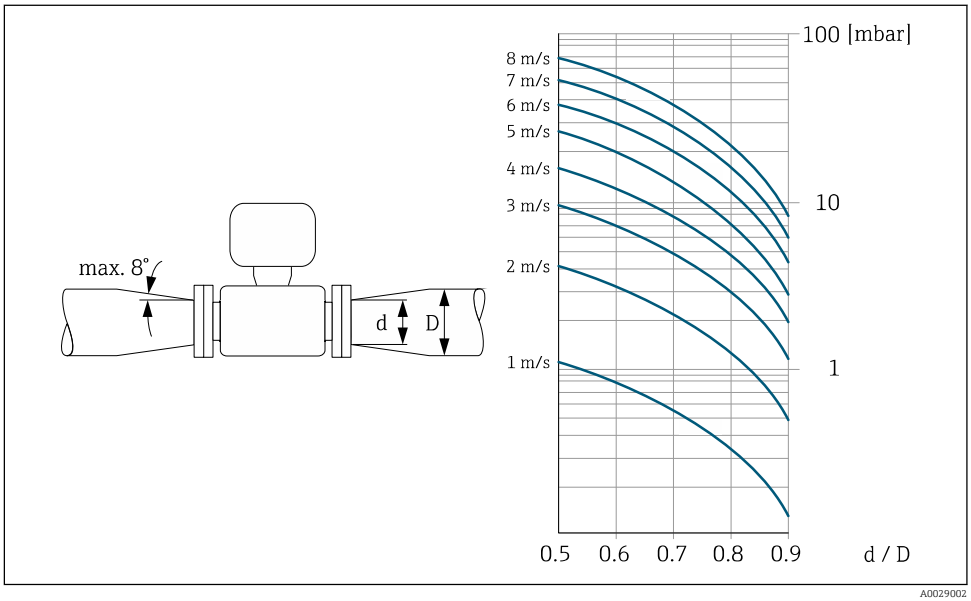

Length of connecting cable

Proline 500 – digital transmitter
Lengths of connecting cable → 48

Proline 500 transmitter
Max. 200 m (650 ft)

To obtain correct measurement results, observe the permitted connecting cable length of L_{max}. This length is determined by the conductivity of the fluid. If measuring liquids in general: 5 µS/cm

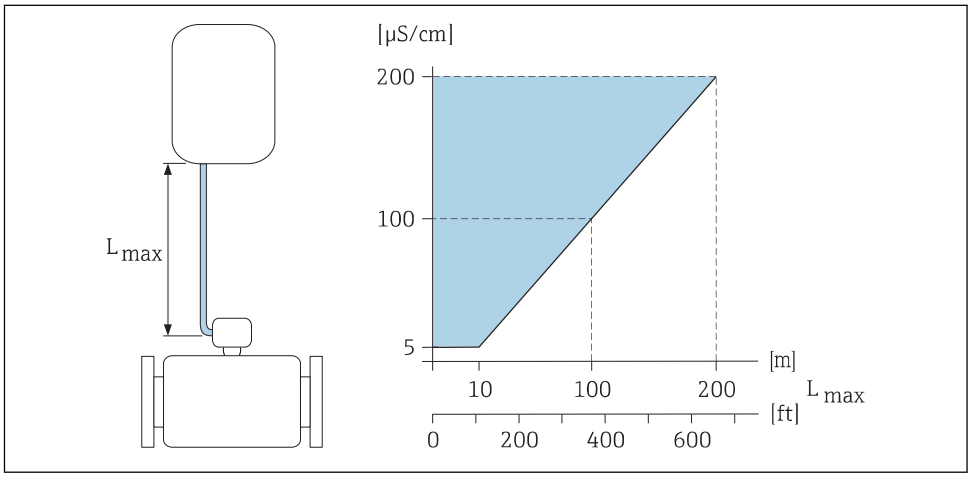

27 *Permitted length of connecting cable*

Colored area = permitted range
L_{max} = length of connecting cable in [m] ([ft])
[µS/cm] = fluid conductivity

Mounting the transmitter housing

Proline 500 – digital transmitter

Post mounting

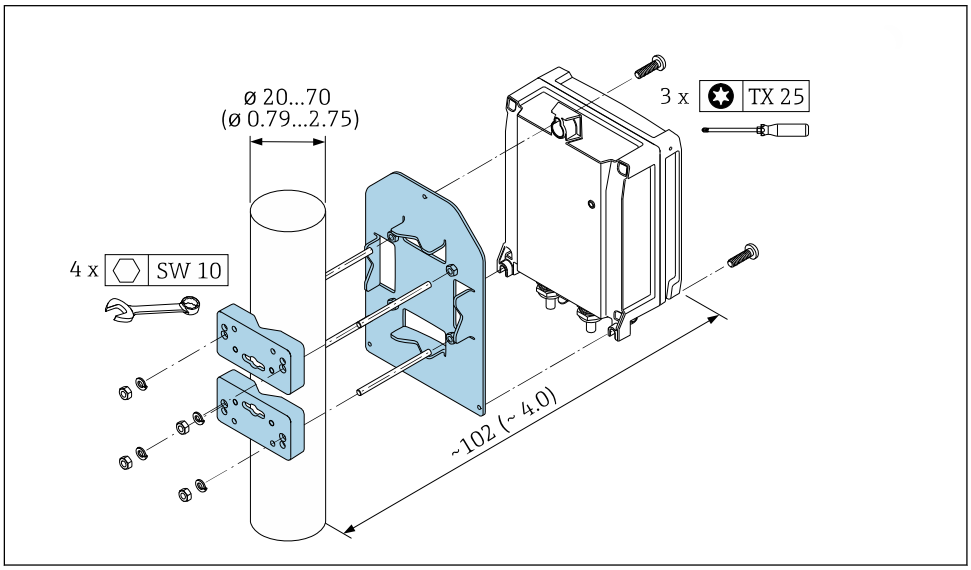

28 *Engineering unit mm (in)*

Wall mounting

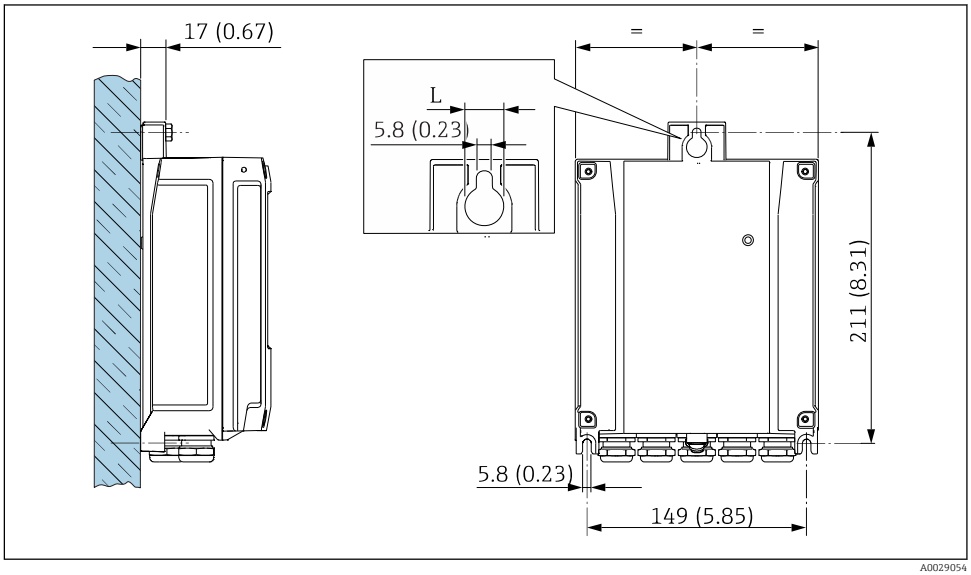

29 *Engineering unit mm (in)*

L Depends on order code for "Transmitter housing"

Order code for "Transmitter housing"
- Option **A**, aluminum coated: L =14 mm (0.55 in)
- Option **D**, polycarbonate: L = 13 mm (0.51 in)

Proline 500 transmitter

Post mounting

⚠ WARNING

Order code for "Transmitter housing", option L "Cast, stainless": cast transmitters are very heavy.

They are unstable if they are not mounted on a secure, fixed post.

► Only mount the transmitter on a secure, fixed post on a stable surface.

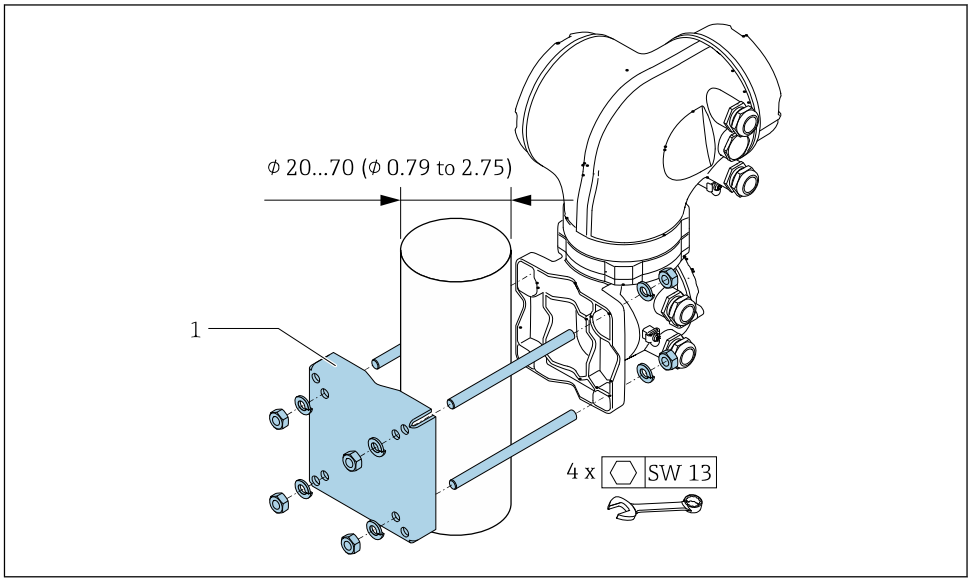

30 *Engineering unit mm (in)*

Wall mounting

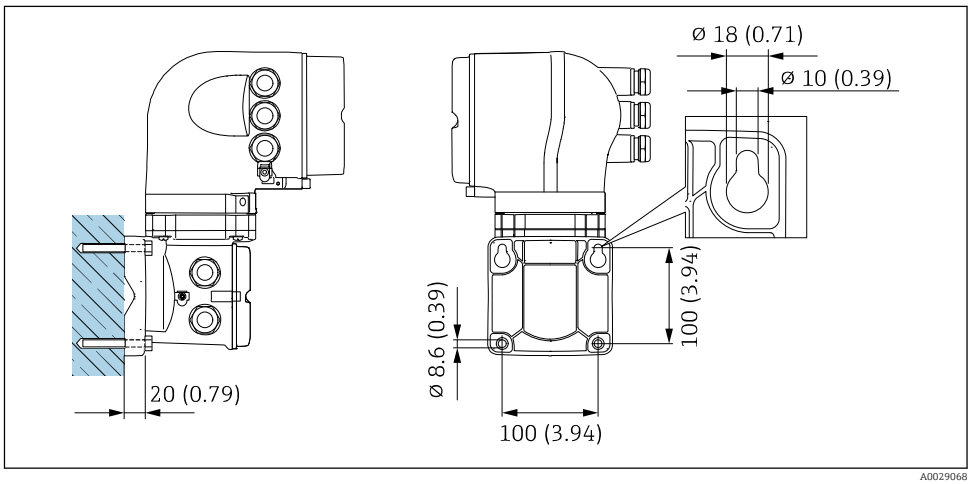

31 *Engineering unit mm (in)*

Special mounting instructions

Protective cover

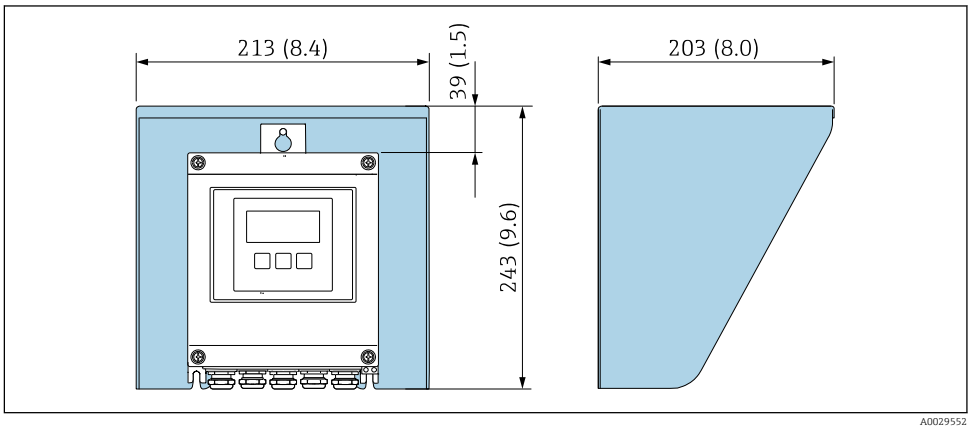

32 *Weather protection cover for Proline 500 – digital*

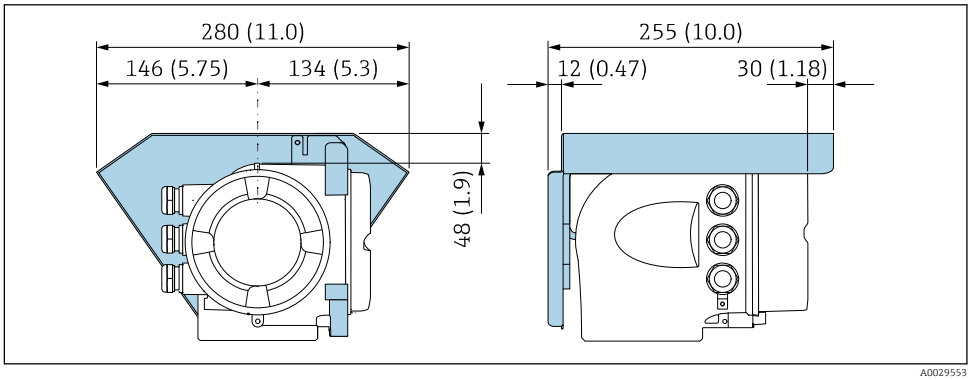

33 *Weather protection cover for Proline 500*

Environment

Ambient temperature range

Transmitter	▪ Standard: −40 to +60 °C (−40 to +140 °F) ▪ Optional: −50 to +60 °C (−58 to +140 °F) (order code for "Test, certificate", option **JN** "Ambient temperature of transmitter −50 °C (−58 °F)")
Local display	−20 to +60 °C (−4 to +140 °F), the readability of the display may be impaired at temperatures outside the temperature range.
Sensor	▪ Process connection material, carbon steel: −10 to +60 °C (+14 to +140 °F) ▪ Process connection material, stainless steel: −40 to +60 °C (−40 to +140 °F) Mount the transmitter separately from the sensor if both the ambient and fluid temperatures are high.
Liner	Do not exceed or fall below the permitted temperature range of the liner .

If operating outdoors:
- Install the measuring device in a shady location.
- Avoid direct sunlight, particularly in warm climatic regions.
- Avoid direct exposure to weather conditions.

Storage temperature

The storage temperature corresponds to the operating temperature range of the transmitter and the sensor → 58.

- Protect the measuring device against direct sunlight during storage in order to avoid unacceptably high surface temperatures.
- Select a storage location where moisture cannot collect in the measuring device as fungus or bacteria infestation can damage the liner.
- If protection caps or protective covers are mounted these should never be removed before installing the measuring device.

Degree of protection

Transmitter
- As standard: IP66/67, type 4X enclosure
- When housing is open: IP20, type 1 enclosure
- Display module: IP20, type 1 enclosure

Sensor
As standard: IP66/67, type 4X enclosure

External WLAN antenna
IP67

Vibration- and shock-resistance

Vibration sinusoidal, in accordance with IEC 60068-2-6

Order code for "Sensor junction housing", option L "Cast, stainless" and order code for "Sensor option", option CG "Extended neck for insulation"
- 2 to 8.4 Hz, 3.5 mm peak
- 8.4 to 2 000 Hz, 1 g peak

Order code for "Sensor connection housing", option A "Alu, coated"
- 2 to 8.4 Hz, 7.5 mm peak
- 8.4 to 2 000 Hz, 2 g peak

Vibration broad-band random, according to IEC 60068-2-64

Order code for "Sensor junction housing", option L "Cast, stainless" and order code for "Sensor option", option CG "Extended neck for insulation"
- 10 to 200 Hz, 0.003 g^2/Hz
- 200 to 2 000 Hz, 0.001 g^2/Hz
- Total: 1.54 g rms

Order code for "Sensor connection housing", option A "Alu, coated"
- 10 to 200 Hz, 0.01 g^2/Hz
- 200 to 2 000 Hz, 0.003 g^2/Hz
- Total: 2.70 g rms

Shock half-sine, according to IEC 60068-2-27

- Order code for "Sensor junction housing", option L "Cast, stainless" and order code for "Sensor option", option CG "Extended neck for insulation"
  6 ms 30 g
- Order code for "Sensor connection housing", option A "Alu, coated"
  6 ms 50 g

Rough handling shocks according to IEC 60068-2-31

Mechanical load

- Protect the transmitter housing against mechanical effects, such as shock or impact.
- Never use the transmitter housing as a ladder or climbing aid.

Electromagnetic compatibility (EMC)

- As per IEC/EN 61326 and NAMUR Recommendation 21 (NE 21)
- Device version with PROFIBUS DP: Complies with emission limits for industry as per EN 50170 Volume 2, IEC 61784

The following applies for PROFIBUS DP: If baud rates > 1.5 MBaud, an EMC cable entry must be used and the cable shield must continue as far as the terminal wherever possible.

Details are provided in the Declaration of Conformity.

Process

Medium temperature range

- −20 to +150 °C (−4 to +302 °F) for PFA, DN 25 to 200 (1 to 8")
- −20 to +180 °C (−4 to +356 °F) for PFA high-temperature, DN 25 to 200 (1 to 8")
- −40 to +130 °C (−40 to +266 °F) for PTFE, DN 15 to 600 (½ to 24")

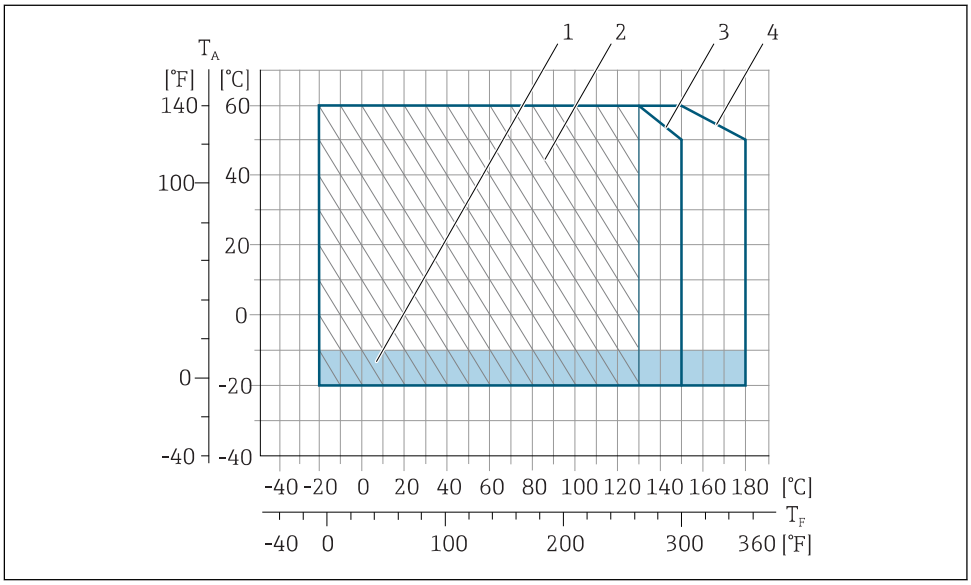

34 *PFA*

T_A *Ambient temperature*
T_F *Medium temperature*
1 *Colored area: the ambient temperature range −10 to −20 °C (+14 to −4 °F) applies to stainless flanges only*
2 *Hatched area: harsh environment only for medium temperature range −20 to +130 °C (−4 to +266 °F)*
3 *−20 to +150 °C (−4 to +302 °F) for PFA, DN 25 to 200 (1 to 8")*
4 *−20 to +180 °C (−4 to +356 °F) for PFA high-temperature, DN 25 to 200 (1 to 8")*

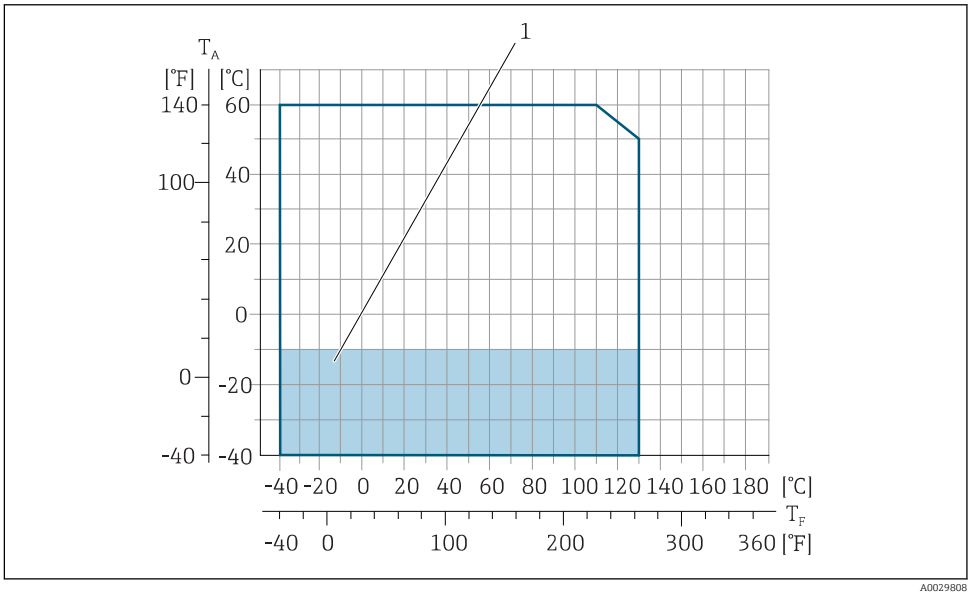

35 *PTFE*

T_A *Ambient temperature*
T_F *Medium temperature*
1 *Colored area: the ambient temperature range of −10 to −40 °C (+14 to −40 °F) applies to stainless flanges only*

Conductivity

≥ 5 µS/cm for liquids in general.

Proline 500
The necessary minimum conductivity also depends on the cable length → 55.

Pressure-temperature ratings

The following pressure/temperature diagrams apply to all pressure-bearing parts of the device and not just the process connection. The diagrams show the maximum permissible medium pressure depending on the specific medium temperature.

Process connection: flange according to EN 1092-1 (DIN 2501)

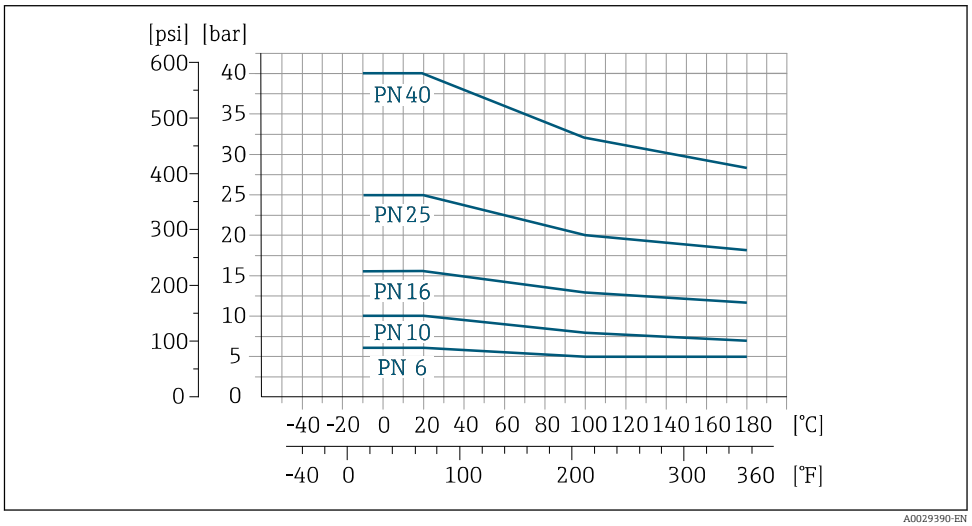

36 *Process connection material: carbon steel, FE410WB/S235JRG2; Alloy C22, 2.4602 (UNS N06022)*

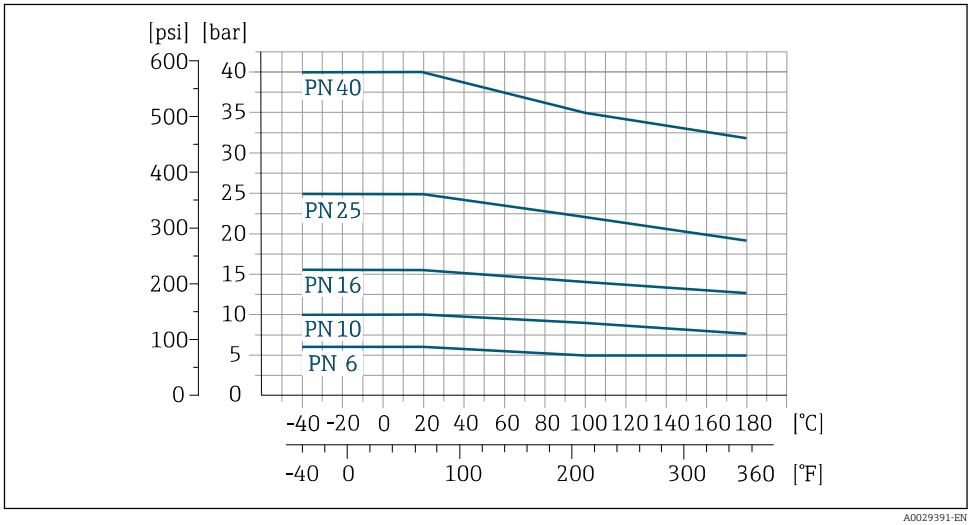

37 *Process connection material: stainless steel, 1.4571*

Process connection: flange according to ASME B16.5

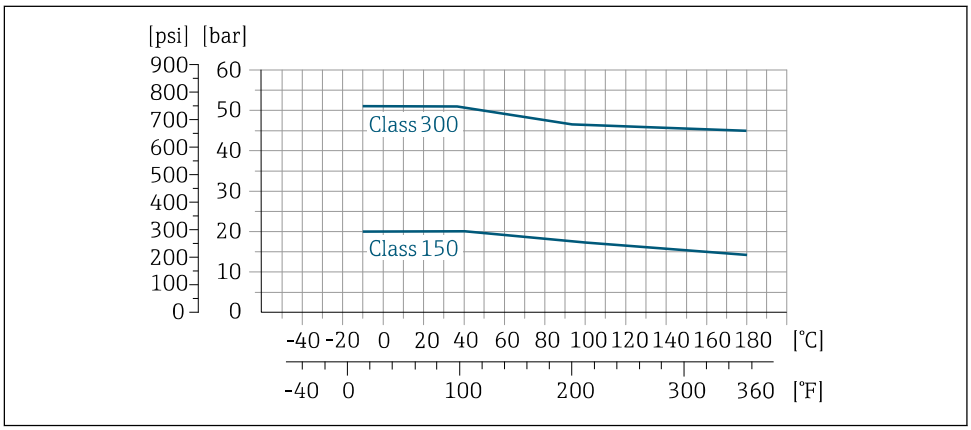

38 Process connection material: carbon steel, A105

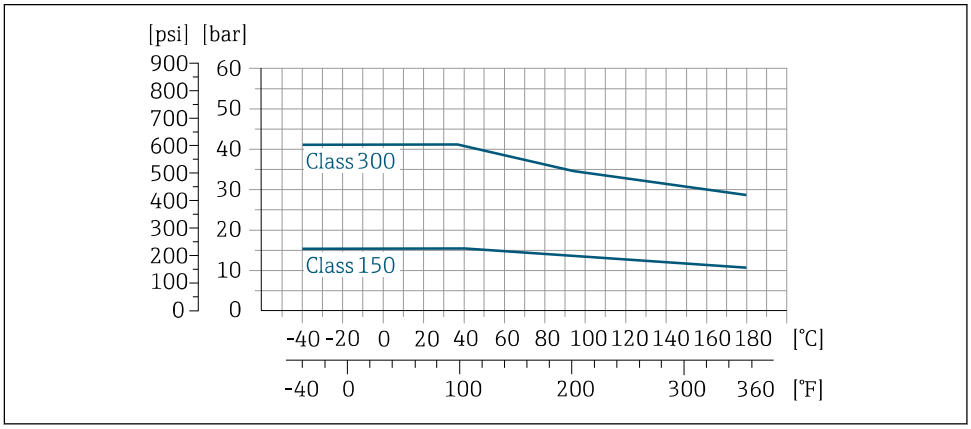

39 Process connection material: stainless steel, F316L

Process connection: flange according to JIS B2220

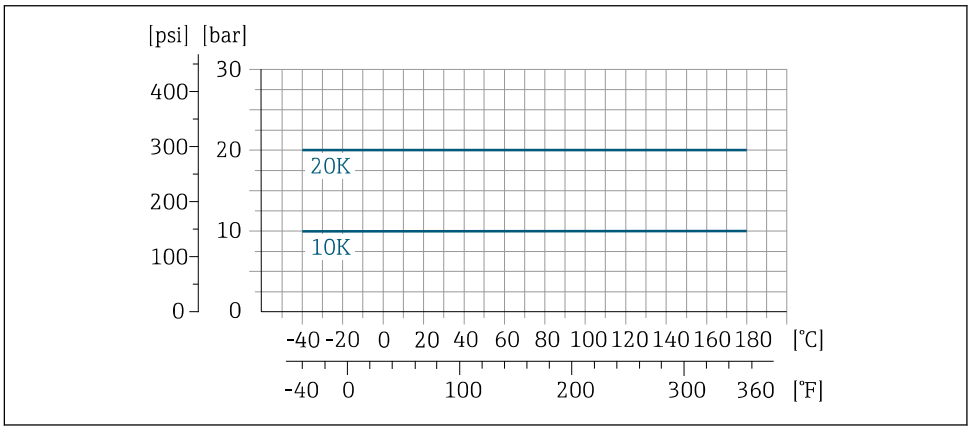

40 Process connection material: stainless steel, F316L; carbon steel, S235JRG2/HII

Process connection: flange according to AS 2129 (Table E) or AS 4087 (PN 16)

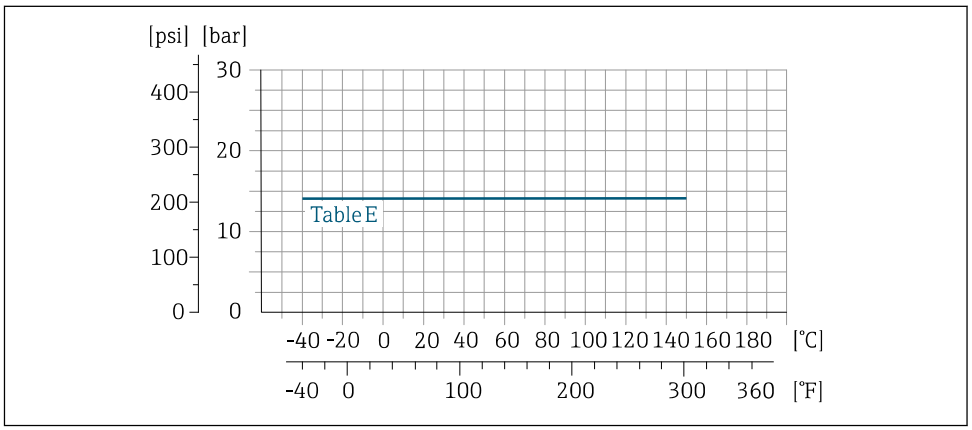

41 *Process connection material: carbon steel, A105/S235JRG2/S275JR*

Pressure tightness

Liner: PFA

Nominal diameter		Limit values for absolute pressure in [mbar] ([psi]) for medium temperatures:		
[mm]	[in]	+25 °C (+77 °F)	+80 °C (+176 °F)	+100 to +180 °C (+212 to +356 °F)
25	1	0 (0)	0 (0)	0 (0)
32	–	0 (0)	0 (0)	0 (0)
40	1 ½	0 (0)	0 (0)	0 (0)
50	2	0 (0)	0 (0)	0 (0)
65	–	0 (0)	0 (0)	0 (0)
80	3	0 (0)	0 (0)	0 (0)
100	4	0 (0)	0 (0)	0 (0)
125	–	0 (0)	0 (0)	0 (0)
150	6	0 (0)	0 (0)	0 (0)
200	8	0 (0)	0 (0)	0 (0)

Liner: PTFE

Nominal diameter		Limit values for absolute pressure in [mbar] ([psi]) for medium temperatures:			
[mm]	[in]	+25 °C (+77 °F)	+80 °C (+176 °F)	+100 °C (+212 °F)	+130 °C (+266 °F)
15	½	0 (0)	0 (0)	0 (0)	100 (1.45)
25	1	0 (0)	0 (0)	0 (0)	100 (1.45)
32	–	0 (0)	0 (0)	0 (0)	100 (1.45)
40	1 ½	0 (0)	0 (0)	0 (0)	100 (1.45)
50	2	0 (0)	0 (0)	0 (0)	100 (1.45)
65	–	0 (0)	–	40 (0.58)	130 (1.89)
80	3	0 (0)	–	40 (0.58)	130 (1.89)
100	4	0 (0)	–	135 (1.96)	170 (2.47)
125	–	135 (1.96)	–	240 (3.48)	385 (5.58)
150	6	135 (1.96)	–	240 (3.48)	385 (5.58)
200	8	200 (2.90)	–	290 (4.21)	410 (5.95)
250	10	330 (4.79)	–	400 (5.80)	530 (7.69)

Nominal diameter		Limit values for absolute pressure in [mbar] ([psi]) for medium temperatures:			
[mm]	[in]	+25 °C (+77 °F)	+80 °C (+176 °F)	+100 °C (+212 °F)	+130 °C (+266 °F)
300	12	400 (5.80)	–	500 (7.25)	630 (9.14)
350	14	470 (6.82)	–	600 (8.70)	730 (10.6)
400	16	540 (7.83)	–	670 (9.72)	800 (11.6)
450	18	No negative pressure permitted!			
500	20				
600	24				

Flow limit

The diameter of the pipe and the flow rate determine the nominal diameter of the sensor. The optimum velocity of flow is between 2 to 3 m/s (6.56 to 9.84 ft/s). Also match the velocity of flow (v) to the physical properties of the fluid:
- v < 2 m/s (6.56 ft/s): for abrasive fluids (e.g. potter's clay, lime milk, ore slurry)
- v > 2 m/s (6.56 ft/s): for fluids producing buildup (e.g. wastewater sludge)

A necessary increase in the flow velocity can be achieved by reducing the sensor nominal diameter.

For an overview of the full scale values for the measuring range, see the "Measuring range" section

Pressure loss

- No pressure loss occurs if the sensor is installed in a pipe with the same nominal diameter.
- Pressure losses for configurations incorporating adapters according to DIN EN 545 → 54

System pressure

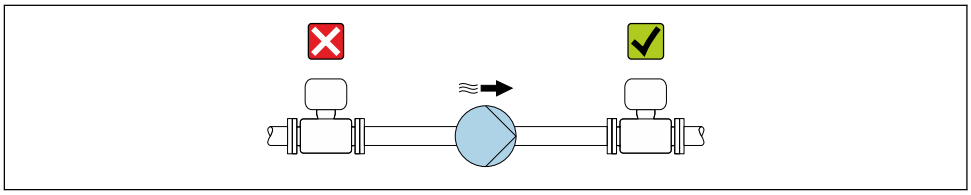

A0028777

Never install the sensor on the pump suction side in order to avoid the risk of low pressure, and thus damage to the liner.

Furthermore, install pulse dampers if reciprocating, diaphragm or peristaltic pumps are used.

- Information on the liner's resistance to partial vacuum
- Information on the shock resistance of the measuring system
- Information on the vibration resistance of the measuring system

Thermal insulation

If process fluids are very hot, it is necessary to insulate pipes in order to reduce energy loss and to prevent individuals from accidentally coming into contact with hot pipes. Please observe the applicable standards and guidelines for insulating pipes.

A housing support/an extended neck is used for heat dissipation:
- Devices with the order code for "Lining", option **B** "PFA high-temperature" always come with a housing support.
- In the case of all other devices, a housing support can be ordered via the order code for "Sensor option", option **CG** "Sensor extended neck".

⚠ WARNING

Electronics overheating on account of thermal insulation!

▶ The housing support is used for heat dissipation and must be completely free (i.e. uncovered). At the very maximum, the sensor insulation may extend as far as the upper edge of the two sensor half-shells.

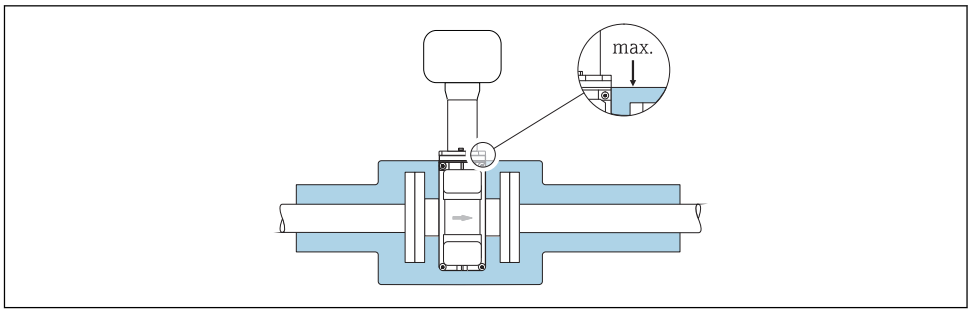

A0031216

Vibrations

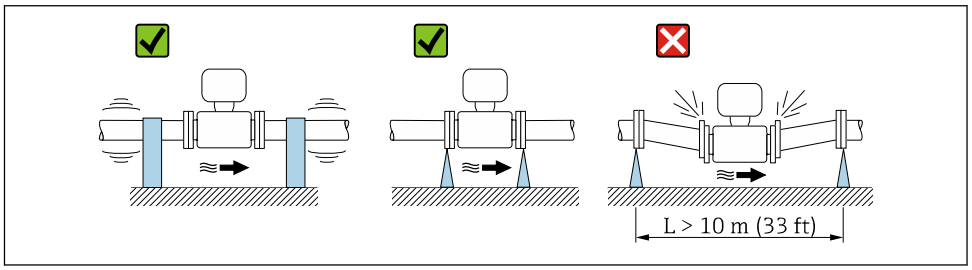

A0029004

42 *Measures to prevent vibration of the device*

In the event of very strong vibrations, the pipe and sensor must be supported and fixed.

- Information on the shock resistance of the measuring system
- Information on the vibration resistance of the measuring system

Magnetism and static electricity

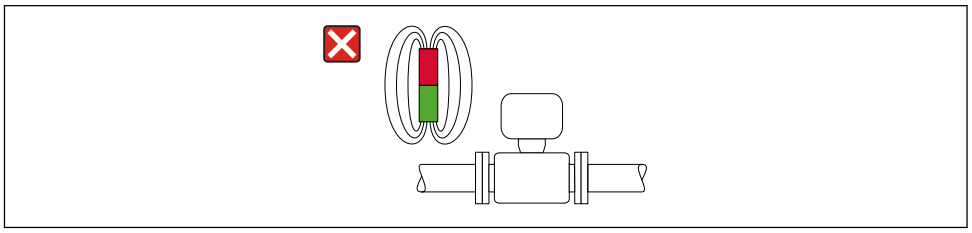

A0042152

43 *Avoid magnetic fields*

Mechanical construction

Dimensions in SI units

Housing of Proline 500 – digital transmitter

Non-hazardous area or hazardous area: Zone 2; Class I, Division 2

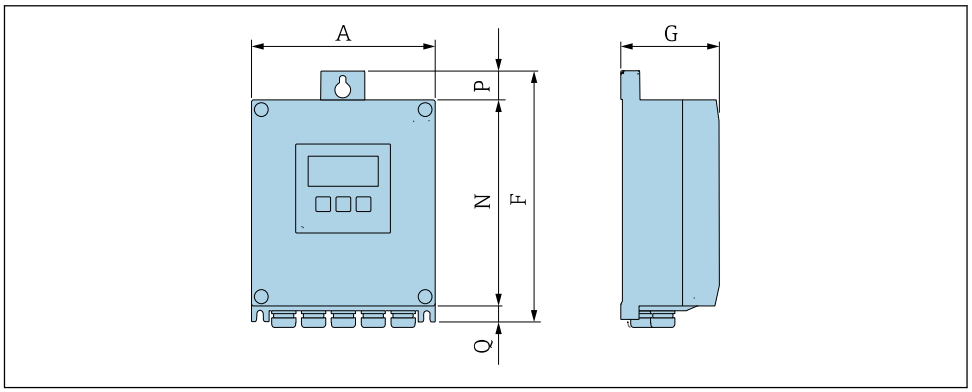

A0033789

Order code for "Transmitter housing", option A "Aluminum, coated" and order code for "Integrated ISEM electronics", option A "Sensor"

A [mm]	F [mm]	G [mm]	N [mm]	P [mm]	Q [mm]
167	232	80	187	24	21

Order code for "Transmitter housing", option D "Polycarbonate" and order code for "Integrated ISEM electronics", option A "Sensor"

A [mm]	F [mm]	G [mm]	N [mm]	P [mm]	Q [mm]
177	234	90	197	17	22

Housing of Proline 500 transmitter

Hazardous area: Zone 2; Class I, Division 2 or Zone 1; Class I, Division 1

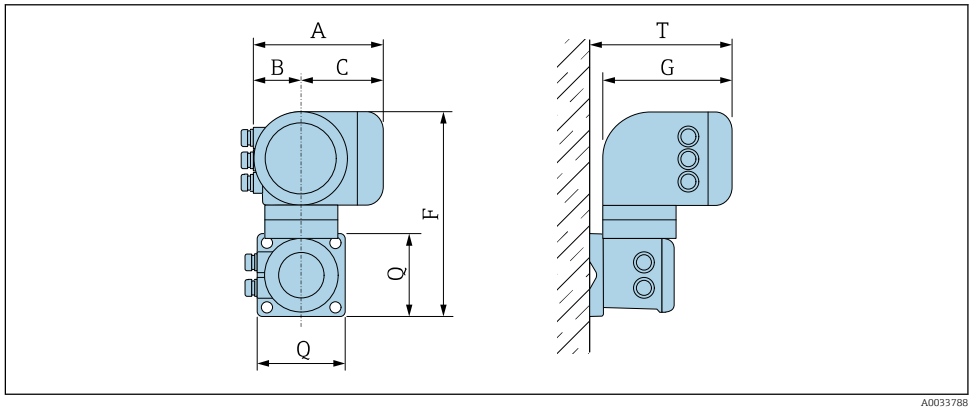

Order code for "Transmitter housing", option A "Aluminum, coated" and order code for "Integrated ISEM electronics", option B "Transmitter"

A [mm]	B [mm]	C [mm]	F [mm]	G [mm]	Q [mm]	T [mm]
188	85	103	318	217	130	239

Order code for "Transmitter housing", option L "Cast, stainless" and order code for "Integrated ISEM electronics", option B "Transmitter"

A [mm]	B [mm]	C [mm]	F [mm]	G [mm]	Q [mm]	T [mm]
188	85	103	295	217	130	239

Sensor connection housing

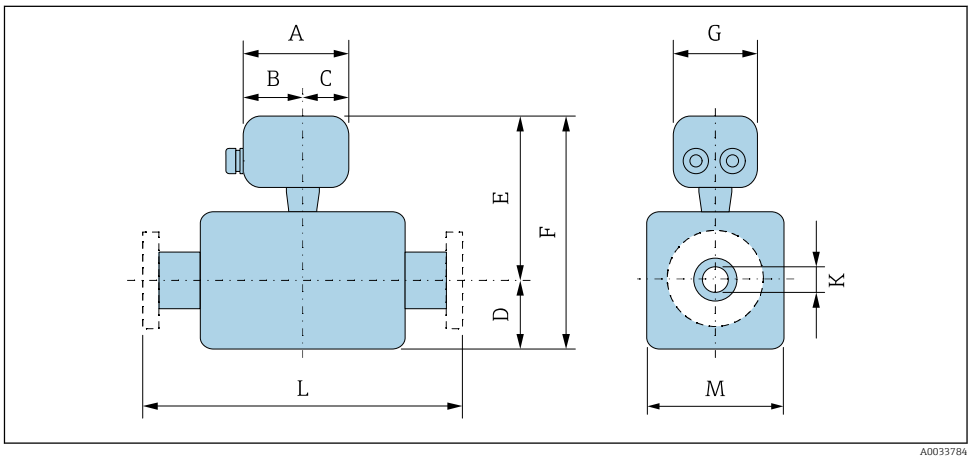

Order code for "Sensor connection housing", option A "Aluminum, coated"

DN [mm]	A [mm]	B [mm]	C [mm]	D [mm]	E [1] [mm]	F [1] [mm]	G [mm]	K [mm]	L [mm]	M [mm]
15	148	94	54	84	197	281	136	[2]	[3]	120
25	148	94	54	84	197	281	136	[2]	[3]	120
32	148	94	54	84	197	281	136	[2]	[3]	120
40	148	94	54	84	197	281	136	[2]	[3]	120
50	148	94	54	84	197	281	136	[2]	[3]	120
65	148	94	54	109	222	331	136	[2]	[3]	180
80	148	94	54	109	222	331	136	[2]	[3]	180
100	148	94	54	109	222	331	136	[2]	[3]	180
125	148	94	54	150	262	412	136	[2]	[3]	260
150	148	94	54	150	262	412	136	[2]	[3]	260
200	148	94	54	180	287	467	136	[2]	[3]	324
250	148	94	54	205	312	517	136	[2]	[3]	400
300	148	94	54	230	337	567	136	[2]	[3]	460
350	148	94	54	282	399	681	136	[2]	[3]	564
400	148	94	54	308	425	733	136	[2]	[3]	616
450	148	94	54	333	450	783	136	[2]	[3]	666
500	148	94	54	359	476	835	136	[2]	[3]	717
600	148	94	54	411	528	939	136	[2]	[3]	821

1) With order code for "Sensor option", option CG "Sensor extended neck for insulation" or order code for "Liner", option B "PFA high temperature": values + 110 mm
2) Depends on the liner → 🖹 84
3) Total length is independent of the process connections. Length according to DVGW (German Technical and Scientific Association for Gas and Water).→ 🖹 69

Order code for "Sensor connection housing", option L "Cast, stainless"

DN [mm]	A [mm]	B [mm]	C [mm]	D [mm]	E [mm]	F [mm]	G [mm]	K [mm]	L [mm]	M [mm]
15	145	86	59	84	235	319	136	1)	2)	120
25	145	86	59	84	235	319	136	1)	2)	120
32	145	86	59	84	235	319	136	1)	2)	120
40	145	86	59	84	235	319	136	1)	2)	120
50	145	86	59	84	235	319	136	1)	2)	120
65	145	86	59	109	260	369	136	1)	2)	180
80	145	86	59	109	260	369	136	1)	2)	180
100	145	86	59	109	260	369	136	1)	2)	180
125	145	86	59	150	300	450	136	1)	2)	260
150	145	86	59	150	300	450	136	1)	2)	260
200	145	86	59	180	325	505	136	1)	2)	324
250	145	86	59	205	350	555	136	1)	2)	400
300	145	86	59	230	375	605	136	1)	2)	460
350	145	86	59	282	437	719	136	1)	2)	564
400	145	86	59	308	463	771	136	1)	2)	616
450	145	86	59	333	488	821	136	1)	2)	666
500	145	86	59	359	514	873	136	1)	2)	717
600	145	86	59	411	566	977	136	1)	2)	821

1) Depends on the liner → 🖹 84
2) Total length is independent of the process connections. Length according to DVGW (German Technical and Scientific Association for Gas and Water).→ 🖹 69

Flange connections

Flange

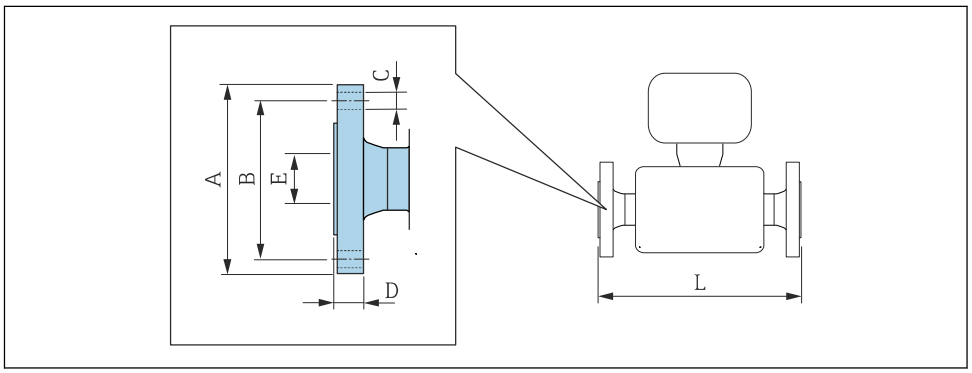

A0015621

Flange in accordance with EN 1092-1 (DIN 2501 / DIN 2512N): PN 10 **P245GH (1.0352):** *order code for "Process connection", option* **D2K** **1.4404 (F316/F316L):** *order code for "Process connection", option* **D2S**						
DN [mm]	**A [mm]**	**B [mm]**	**C [mm]**	**D [mm]**	**E [mm]**	**L [1] [mm]**
200	340	295	8 × Ø22	26	220.9	350
250	395	350	12 × Ø22	28	275.5	450
300	445	400	12 × Ø22	28	326.5	500
350	505	460	16 × Ø22	26	346	550
400	565	515	16 × Ø26	26	396	600
450	615	565	20 × Ø26	28	447	650
500	670	620	20 × Ø26	28	498	650
600	780	725	20 × Ø30	30	600	780
Surface roughness (flange): EN 1092-1 Form B1 (DIN 2526 Form C), Ra 6.3 to 12.5 µm						

1) Length according to DVGW (German Technical and Scientific Association for Gas and Water).

Flange in accordance with EN 1092-1 (DIN 2501 / DIN 2512N): PN 16 **P245GH (1.0352):** *order code for "Process connection", option* **D3K** **1.4404 (F316/F316L):** *order code for "Process connection", option* **D3S**						
DN [mm]	**A [mm]**	**B [mm]**	**C [mm]**	**D [mm]**	**E [mm]**	**L [1] [mm]**
65	185	145	8 × Ø18	20	77.1	200
80	200	160	8 × Ø18	20	89.9	200
100	220	180	8 × Ø18	22	115.3	250
125	250	210	8 × Ø18	24	141.3	250
150	285	240	8 × Ø22	24	170.2	300
200	340	295	12 × Ø22	26	220.9	350
250	405	355	12 × Ø26	32	275.7	450
300	460	410	12 × Ø26	32	326.5	500
350	520	470	16 × Ø26	30	346	550
400	580	525	16 × Ø30	32	396	600
500	715	650	20 × Ø33	36	498	650

Flange in accordance with EN 1092-1 (DIN 2501 / DIN 2512N): PN 16
P245GH (1.0352): *order code for "Process connection", option* **D3K**
1.4404 (F316/F316L): *order code for "Process connection", option* **D3S**

DN [mm]	A [mm]	B [mm]	C [mm]	D [mm]	E [mm]	L [1] [mm]
600	840	770	20 × Ø36	40	600	780
Surface roughness (flange): EN 1092-1 Form B1 (DIN 2526 Form C), Ra 6.3 to 12.5 µm						

1) Length according to DVGW (German Technical and Scientific Association for Gas and Water).

Flange in accordance with EN 1092-1 (DIN 2501 / DIN 2512N): PN 25
P245GH (1.0352): *order code for "Process connection", option* **D4K**
1.4404 (F316/F316L): *order code for "Process connection", option* **D4S**

DN [mm]	A [mm]	B [mm]	C [mm]	D [mm]	E [mm]	L [1] [mm]
200	360	310	12 × Ø26	32	220.9	350
250	425	370	12 × Ø30	36	275.7	450
300	485	430	16 × Ø30	40	326.5	500
350	555	490	16 × Ø33	38	346	550
400	620	550	16 × Ø36	40	396	600
500	730	660	20 × Ø36	48	498	650
600	845	770	20 × Ø39	48	600	780
Surface roughness (flange): EN 1092-1 Form B1 (DIN 2526 Form C), Ra 6.3 to 12.5 µm						

1) Length according to DVGW (German Technical and Scientific Association for Gas and Water).

Flange in accordance with EN 1092-1 (DIN 2501 / DIN 2512N): PN 40
P245GH (1.0352): *order code for "Process connection", option* **D5K**
1.4404 (F316/F316L): *order code for "Process connection", option* **D5S**

DN [mm]	A [mm]	B [mm]	C [mm]	D [mm]	E [mm]	L [1] [mm]
15	95	65	4 × Ø14	14	22.2	200
25	115	85	4 × Ø14	16	34.2	200
32	140	100	4 × Ø18	18	43	200
40	150	110	4 × Ø18	18	49.1	200
50	165	125	4 × Ø18	20	61.3	200
65	185	145	8 × Ø18	24	77.1	200
80	200	160	8 × Ø18	26	89.9	200
100	235	190	8 × Ø22	26	115.3	250
125	270	220	8 × Ø26	28	141.3	250
150	300	250	8 × Ø26	30	170.2	300
Surface roughness (flange): EN 1092-1 Form B1 (DIN 2526 Form C), Ra 6.3 to 12.5 µm						

1) Length according to DVGW (German Technical and Scientific Association for Gas and Water).

Flange according to ASME B16.5, Class 150
A 105: *order code for "Process connection", option* **A1K**
1.4404 (F316/F316L): *order code for "Process connection", option* **A1S**

DN [mm]	A [mm]	B [mm]	C [mm]	D [mm]	E [mm]	L [1)] [mm]
15	88.9	60.5	4 × Ø16	9.6	22.3	200
25	108	79.2	4 × Ø16	12.6	34.2	200
40	127	98.6	4 × Ø16	15.9	49.1	200
50	152.4	120.7	4 × Ø19.1	17.5	61.3	200
80	190.5	152.4	4 × Ø19.1	22.3	89.9	200
100	228.6	190.5	8 × Ø19.1	22.3	115.3	250
150	279.4	241.3	8 × Ø22.4	23.8	170.2	300
200	342.9	298.5	8 × Ø22.4	26.8	220.9	350
250	406.4	362	12 × Ø25.4	29.6	275.7	450
300	482.6	431.8	12 × Ø25.4	30.2	326.5	500
350	535	476.3	12 × Ø28.6	35.4	346	550
400	595	539.8	16 × Ø28.6	37	396	600
450	635	577.9	16 × Ø31.8	40.1	447	650
500	700	635	20 × Ø31.8	43.3	498	650
600	815	749.3	20 × Ø34.9	48.1	600	780
Surface roughness (flange): Ra 6.3 to 12.5 µm						

1) Length according to DVGW (German Technical and Scientific Association for Gas and Water).

Flange according to ASME B16.5, Class 300
A 105: *order code for "Process connection", option* **A2K**
1.4404 (F316/F316L): *order code for "Process connection", option* **A2S**

DN [mm]	A [mm]	B [mm]	C [mm]	D [mm]	E [mm]	L [1)] [mm]
15	95.3	66.5	4 × Ø16	12.6	22.3	200
25	123.9	88.9	4 × Ø19.1	15.9	34.2	200
40	155.4	114.3	4 × Ø22.4	19	49.1	200
50	165.1	127	8 × Ø19.1	20.8	61.3	200
80	209.6	168.1	8 × Ø22.4	26.8	89.9	200
100	254	200.2	8 × Ø22.4	30.2	115.3	250
150	317.5	269.7	12 × Ø22.4	35	170.2	300
Surface roughness (flange): Ra 6.3 to 12.5 µm						

1) Length according to DVGW (German Technical and Scientific Association for Gas and Water).

Flange according to JIS B2220, 10K
A 105/A350LF2: *order code for "Process connection", option* **N3K**
1.4404 (F316L): *order code for "Process connection", option* **N3S**

DN [mm]	A [mm]	B [mm]	C [mm]	D [mm]	E [mm]	L [1)] [mm]
50	155	120	4 × Ø19	16	61.1	200
65	175	140	4 × Ø19	18	77.1	200
80	185	150	8 × Ø19	18	90	200

Flange according to JIS B2220, 10K
A 105/A350LF2: *order code for "Process connection", option* **N3K**
1.4404 (F316L): *order code for "Process connection", option* **N3S**

DN [mm]	A [mm]	B [mm]	C [mm]	D [mm]	E [mm]	L [1] [mm]
100	210	175	8 × Ø19	18	115.4	250
125	250	210	8 × Ø23	20	141.2	250
150	280	240	8 × Ø23	22	169	300
200	330	290	12 × Ø23	22	220	350
250	400	355	12 × Ø25	24	274	450
300	445	400	16 × Ø25	24	325	500
Surface roughness (flange): Ra 6.3 to 12.5 µm						

1) Length according to DVGW (German Technical and Scientific Association for Gas and Water).

Flange according to JIS B2220, 20K
A 105/A350LF2: *order code for "Process connection", option* **N4K**
1.4404 (F316L): *order code for "Process connection", option* **N4S**

DN [mm]	A [mm]	B [mm]	C [mm]	D [mm]	E [mm]	L [1] [mm]
15	95	70	4 × Ø15	14	22.2	200
25	125	90	4 × Ø19	16	34.5	200
32	135	100	4 × Ø19	18	43.2	200
40	140	105	4 × Ø19	18	49.1	200
50	155	120	8 × Ø19	18	61.1	200
65	175	140	8 × Ø19	20	77.1	200
80	200	160	8 × Ø23	22	90	200
100	225	185	8 × Ø23	24	115.4	250
125	270	225	8 × Ø25	26	141.2	250
150	305	260	12 × Ø25	28	169	300
200	350	305	12 × Ø25	30	220	350
250	430	380	12 × Ø27	34	274	450
300	480	430	16 × Ø27	36	325	500
Surface roughness (flange): Ra 6.3 to 12.5 µm						

1) Length according to DVGW (German Technical and Scientific Association for Gas and Water).

Accessories

Protective cover

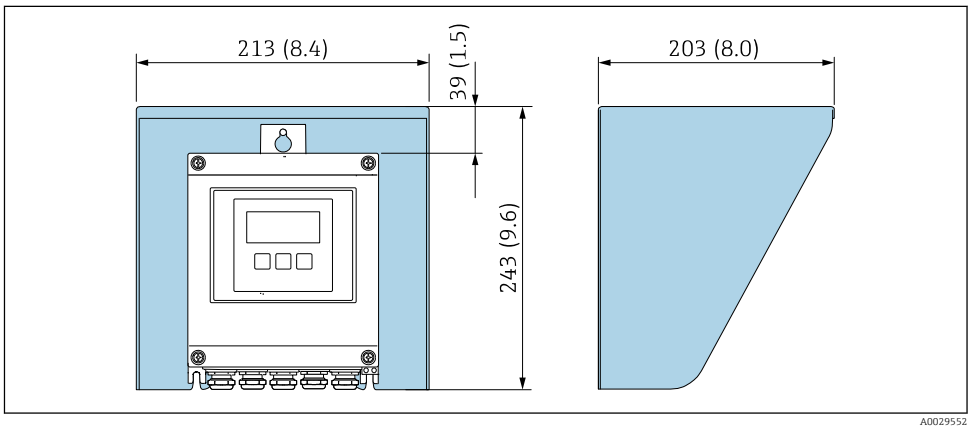

44 *Weather protection cover for Proline 500 – digital*

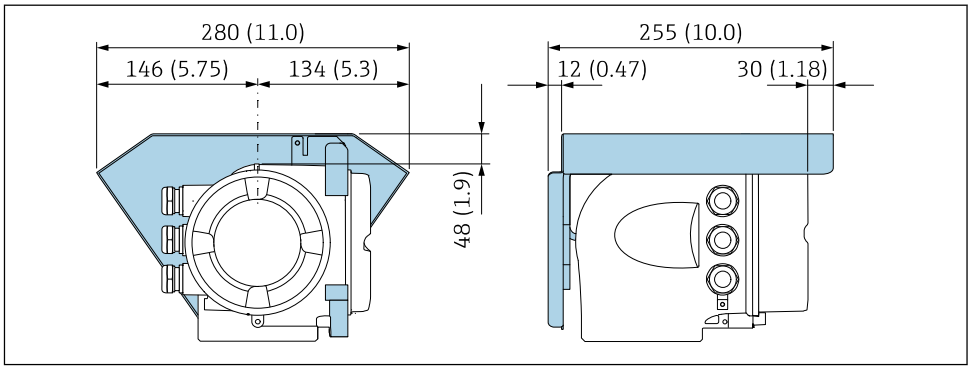

45 *Weather protection cover for Proline 500*

External WLAN antenna

The external WLAN antenna is not suitable for use in hygienic applications.

Proline 500 – digital

External WLAN antenna mounted on device

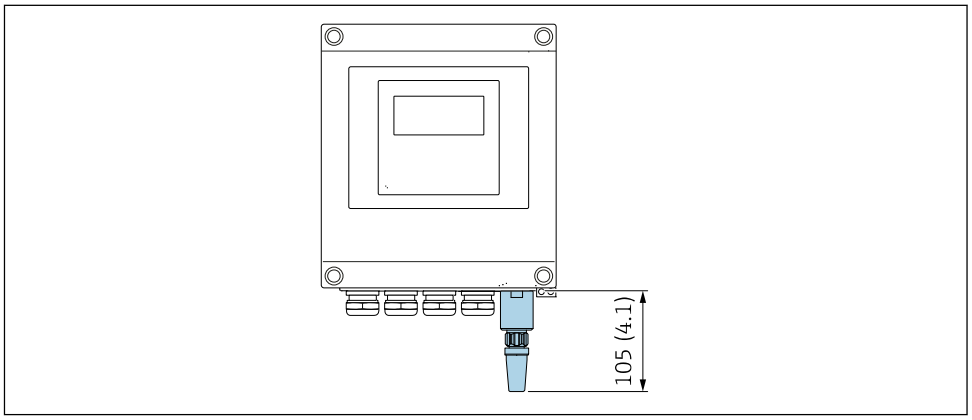

46 *Engineering unit mm (in)*

External WLAN antenna mounted with cable

The external WLAN antenna can be mounted separately from the transmitter if the transmission/ reception conditions at the transmitter mounting location are poor.

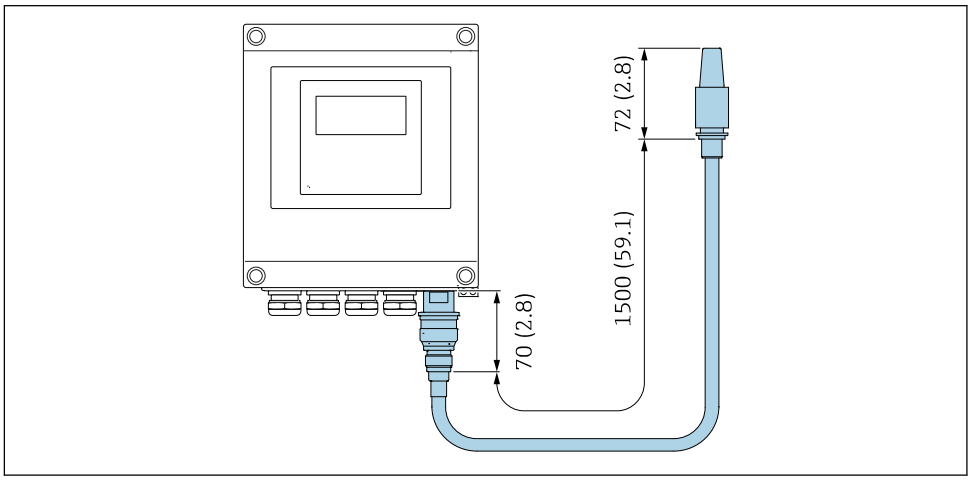

47 *Engineering unit mm (in)*

Proline 500

External WLAN antenna mounted on device

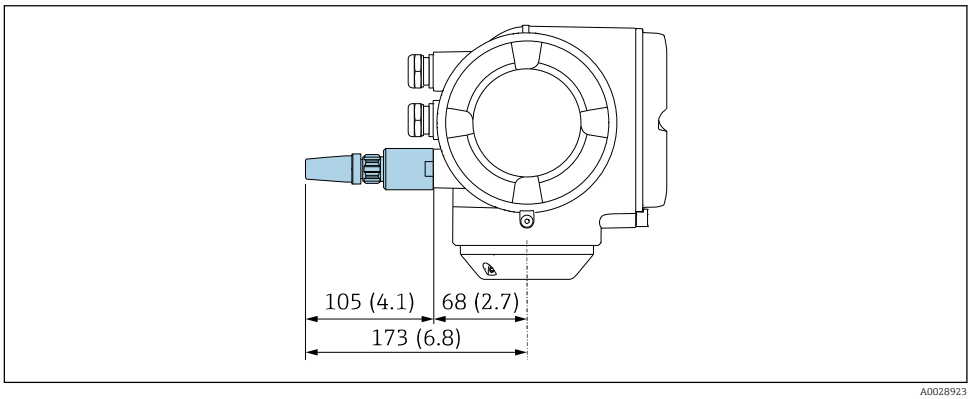

48 *Engineering unit mm (in)*

External WLAN antenna mounted with cable

The external WLAN antenna can be mounted separately from the transmitter if the transmission/ reception conditions at the transmitter mounting location are poor.

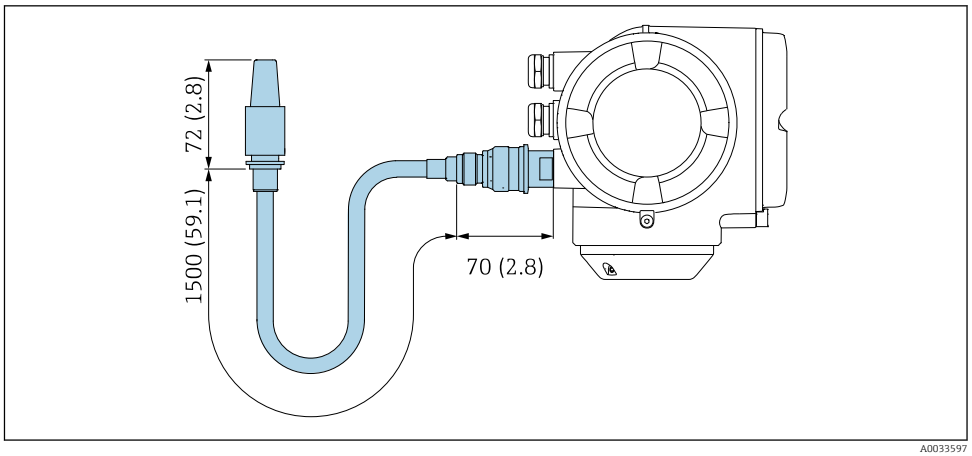

49 *Engineering unit mm (in)*

Ground disk for flange connection

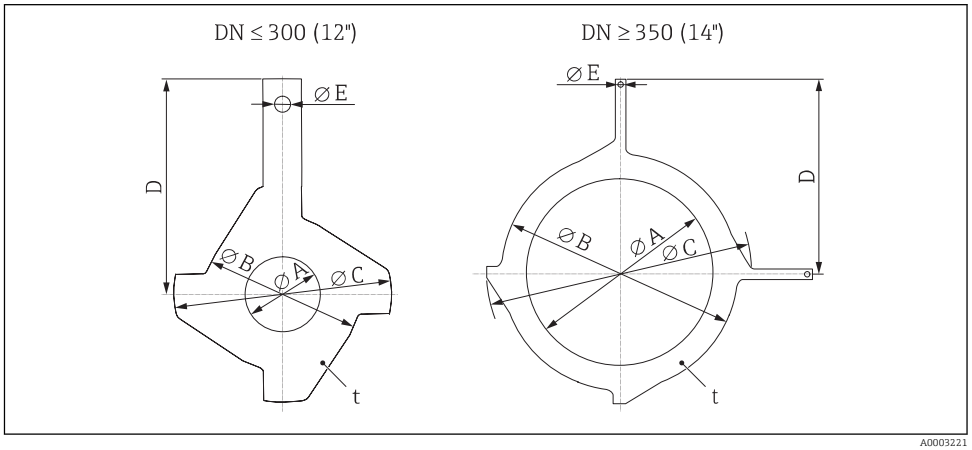

DN [1] EN (DIN), JIS, AS [2] [mm]	A PFA, PTFE [mm]	B [mm]	C [mm]	D [mm]	E [mm]	t [mm]
15	16	43	61.5	73	6.5	2
25	26	62	77.5	87.5	6.5	2
32	35	80	87.5	94.5	6.5	2
40	41	82	101	103	6.5	2
50	52	101	115.5	108	6.5	2
65	68	121	131.5	118	6.5	2
80	80	131	154.5	135	6.5	2
100	104	156	186.5	153	6.5	2
125	130	187	206.5	160	6.5	2
150	158	217	256	184	6.5	2
200	206	267	288	205	6.5	2
250	260	328	359	240	6.5	2
300 [3]	312	375	413	273	6.5	2
300 [4]	310	375	404	268	6.5	2

DN [1] EN (DIN), JIS, AS [2] [mm]	A PFA, PTFE [mm]	B [mm]	C [mm]	D [mm]	E [mm]	t [mm]
350 [3]	343	433	479	365	9.0	2
400 [3]	393	480	542	395	9.0	2
450 [3]	439	538	583	417	9.0	2
500 [3]	493	592	650	460	9.0	2
600 [3]	593	693	766	522	9.0	2

1) Ground disks DN 15 to 250 (½ to 10") can be used for all available flange standards/pressure ratings.
2) For flanges to AS, only DN 25 and DN 50 are available.
3) PN 10/16
4) PN 25, JIS 10K/20K

Dimensions in US units

Housing of Proline 500 – digital transmitter

Non-hazardous area or hazardous area: Zone 2; Class I, Division 2

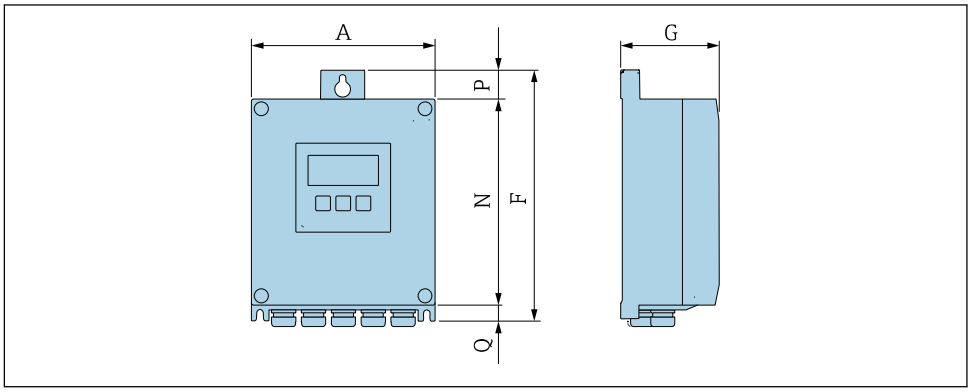

Order code for "Transmitter housing", option A "Aluminum, coated" and order code for "Integrated ISEM electronics", option A "Sensor"

A [in]	F [in]	G [in]	N [in]	P [in]	Q [in]
6.57	9.13	3.15	7.36	0.94	0.83

Order code for "Transmitter housing", option D "Polycarbonate" and order code for "Integrated ISEM electronics", option A "Sensor"

A [in]	F [in]	G [in]	N [in]	P [in]	Q [in]
6.97	9.21	3.54	7.76	0.67	0.87

Housing of Proline 500 transmitter

Hazardous area: Zone 2; Class I, Division 2 or Zone 1; Class I, Division 1

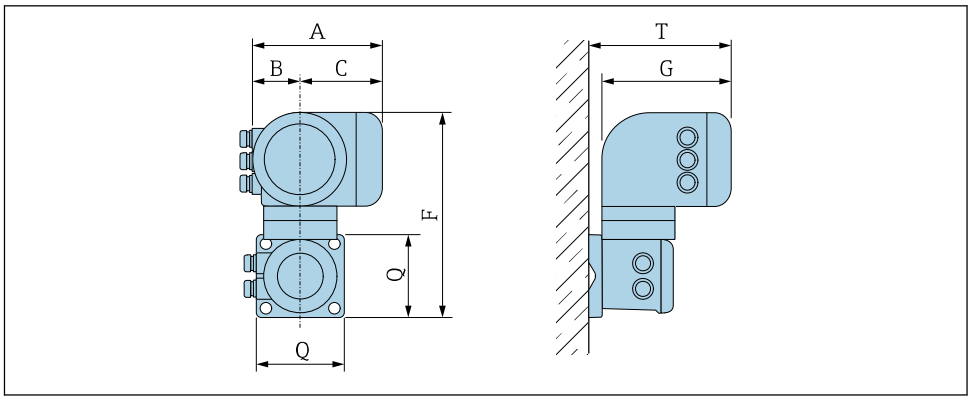

Order code for "Transmitter housing", option A "Aluminum, coated" and order code for "Integrated ISEM electronics", option B "Transmitter"

A [in]	B [in]	C [in]	F [in]	G [in]	Q [in]	T [in]
7.40	3.35	4.06	12.5	8.54	5.12	9.41

Order code for "Transmitter housing", option L "Cast, stainless" and order code for "Integrated ISEM electronics", option B "Transmitter"

A [in]	B [in]	C [in]	F [in]	G [in]	Q [in]	T [in]
7.40	3.35	4.06	11.6	8.54	5.12	9.41

Sensor connection housing

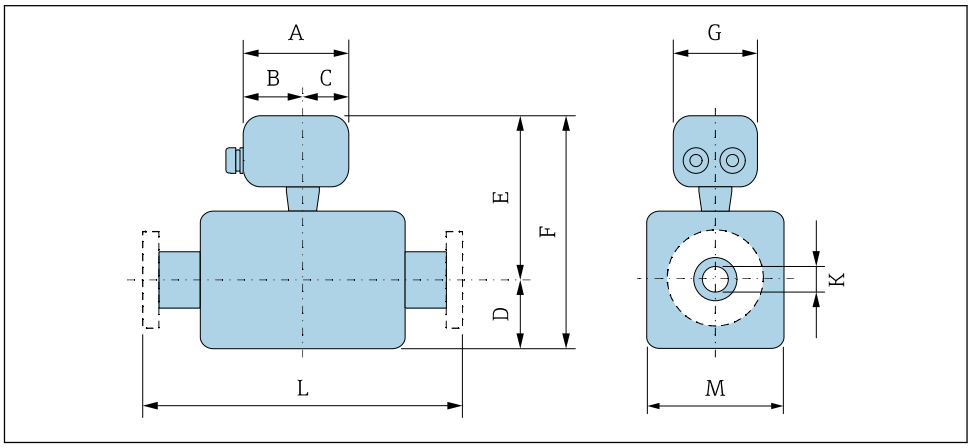

Order code for "Sensor connection housing", option A "Aluminum, coated"

DN [in]	A [in]	B [in]	C [in]	D [in]	E [1] [in]	F [1] [in]	G [in]	K [in]	L [in]	M [in]
½	5.83	3.70	2.13	3.31	7.76	11.06	5.35	[2]	[3]	4.72
1	5.83	3.70	2.13	3.31	7.76	11.06	5.35	[2]	[3]	4.72
1 ¼	5.83	3.70	2.13	3.31	7.76	11.06	5.35	[2]	[3]	4.72
1 ½	5.83	3.70	2.13	3.31	7.76	11.06	5.35	[2]	[3]	4.72
2	5.83	3.70	2.13	3.31	7.76	11.06	5.35	[2]	[3]	4.72

DN [in]	A [in]	B [in]	C [in]	D [in]	E [1] [in]	F [1] [in]	G [in]	K [in]	L [in]	M [in]
2 ½	5.83	3.70	2.13	4.29	8.74	13.03	5.35	[2]	[3]	7.09
3	5.83	3.70	2.13	4.29	8.74	13.03	5.35	[2]	[3]	7.09
4	5.83	3.70	2.13	4.29	8.74	13.03	5.35	[2]	[3]	7.09
5	5.83	3.70	2.13	5.91	10.31	16.22	5.35	[2]	[3]	10.2
6	5.83	3.70	2.13	5.91	10.31	16.22	5.35	[2]	[3]	10.2
8	5.83	3.70	2.13	7.09	11.3	18.39	5.35	[2]	[3]	12.8
10	5.83	3.70	2.13	8.07	12.28	20.35	5.35	[2]	[3]	15.8
12	5.83	3.70	2.13	9.06	13.27	22.32	5.35	[2]	[3]	18.1
14	5.83	3.70	2.13	11.1	15.71	26.81	5.35	[2]	[3]	22.2
16	5.83	3.70	2.13	12.13	16.73	28.86	5.35	[2]	[3]	24.3
18	5.83	3.70	2.13	13.11	17.72	30.83	5.35	[2]	[3]	26.2
20	5.83	3.70	2.13	14.13	18.74	32.87	5.35	[2]	[3]	28.2
24	5.83	3.70	2.13	16.18	20.79	36.97	5.35	[2]	[3]	32.3

1) With order code for "Sensor option", option CG "Sensor extended neck for insulation" or order code for "Liner", option B "PFA high temperature": values + 4.33 in
2) Depends on the liner → 🖹 84
3) Total length is independent of the process connections. Length according to DVGW (German Technical and Scientific Association for Gas and Water).→ 🖹 79

Order code for "Sensor connection housing", option L "Cast, stainless"

DN [in]	A [in]	B [in]	C [in]	D [in]	E [in]	F [in]	G [in]	K [in]	L [in]	M [in]
½	5.71	3.39	2.32	3.31	9.25	12.56	5.35	[1]	[2]	4.72
1	5.71	3.39	2.32	3.31	9.25	12.56	5.35	[1]	[2]	4.72
1 ¼	5.71	3.39	2.32	3.31	9.25	12.56	5.35	[1]	[2]	4.72
1 ½	5.71	3.39	2.32	3.31	9.25	12.56	5.35	[1]	[2]	4.72
2	5.71	3.39	2.32	3.31	9.25	12.56	5.35	[1]	[2]	4.72
2 ½	5.71	3.39	2.32	4.29	10.24	14.53	5.35	[1]	[2]	7.09
3	5.71	3.39	2.32	4.29	10.24	14.53	5.35	[1]	[2]	7.09
4	5.71	3.39	2.32	4.29	10.24	14.53	5.35	[1]	[2]	7.09
5	5.71	3.39	2.32	5.91	11.81	17.72	5.35	[1]	[2]	10.2
6	5.71	3.39	2.32	5.91	11.81	17.72	5.35	[1]	[2]	10.2
8	5.71	3.39	2.32	7.09	12.8	19.88	5.35	[1]	[2]	12.8
10	5.71	3.39	2.32	8.07	13.78	21.85	5.35	[1]	[2]	15.8
12	5.71	3.39	2.32	9.06	14.76	23.82	5.35	[1]	[2]	18.1
14	5.71	3.39	2.32	11.1	17.2	28.31	5.35	[1]	[2]	22.2
16	5.71	3.39	2.32	12.13	18.23	30.35	5.35	[1]	[2]	24.3
18	5.71	3.39	2.32	13.11	19.21	32.32	5.35	[1]	[2]	26.2
20	5.71	3.39	2.32	14.13	20.24	34.37	5.35	[1]	[2]	28.2
24	5.71	3.39	2.32	16.18	22.28	38.46	5.35	[1]	[2]	32.3

1) Depends on the liner → 🖹 84
2) Total length is independent of the process connections. Length according to DVGW (German Technical and Scientific Association for Gas and Water).→ 🖹 79

Flange connections

Flange

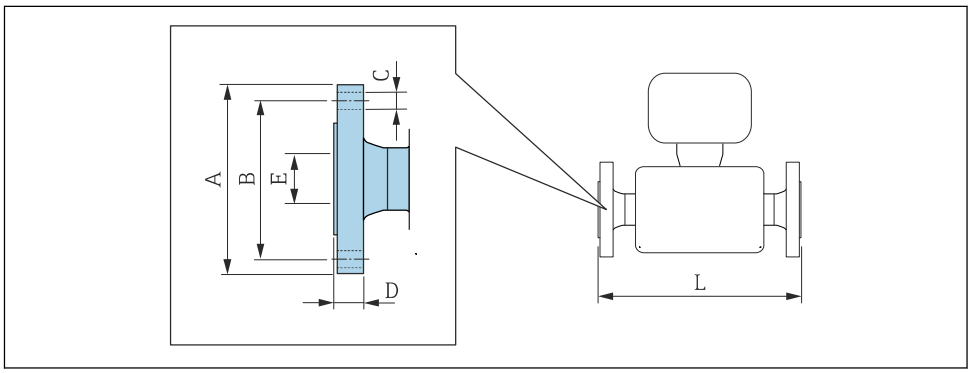

Flange according to ASME B16.5, Class 150 **A 105:** *order code for "Process connection", option* **A1K** **1.4404 (F316/F316L):** *order code for "Process connection", option* **A1S**						
DN [in]	**A [in]**	**B [in]**	**C [in]**	**D [in]**	**E [in]**	**L [1] [in]**
½	3.5	2.38	4 × Ø0.63	0.38	0.88	7.87
1	4.25	3.12	4 × Ø0.63	0.5	1.35	7.87
1 ½	5	3.88	4 × Ø0.63	0.63	1.93	7.87
2	6	4.75	4 × Ø0.75	0.69	2.41	7.87
3	7.5	6	4 × Ø0.75	0.88	3.54	7.87
4	9	7.5	8 × Ø0.75	0.88	4.54	9.84
6	11	9.5	8 × Ø0.88	0.94	6.7	11.8
8	13.5	11.75	8 × Ø0.88	1.06	8.7	13.8
10	16	14.25	12 × Ø1	1.17	10.85	17.7
12	19	17	12 × Ø1	1.19	12.85	19.7
14	21.06	18.75	12 × Ø1.13	1.39	13.62	21.7
16	23.43	21.25	16 × Ø1.13	1.46	15.59	23.6
18	25	22.75	16 × Ø1.25	1.58	17.6	25.6
20	27.56	25	20 × Ø1.25	1.7	19.61	25.6
24	32.09	29.5	20 × Ø1.37	1.89	23.62	30.7
Surface roughness (flange): Ra 6.3 to 12.5 µm						

1) Length according to DVGW (German Technical and Scientific Association for Gas and Water).

Flange according to ASME B16.5, Class 300 **A 105:** *order code for "Process connection", option* **A2K** **1.4404 (F316/F316L):** *order code for "Process connection", option* **A2S**						
DN [in]	**A [in]**	**B [in]**	**C [in]**	**D [in]**	**E [in]**	**L [1] [in]**
½	3.75	2.62	4 × Ø0.63	0.5	0.88	7.87
1	4.88	3.5	4 × Ø0.75	0.63	1.35	7.87
1 ½	6.12	4.5	4 × Ø0.88	0.75	1.93	7.87
2	6.5	5	8 × Ø0.75	0.82	2.41	7.87

Flange according to ASME B16.5, Class 300 **A 105:** *order code for "Process connection", option* **A2K** **1.4404 (F316/F316L):** *order code for "Process connection", option* **A2S**						
DN [in]	**A [in]**	**B [in]**	**C [in]**	**D [in]**	**E [in]**	**L** [1] **[in]**
3	8.25	6.62	8 × Ø0.88	1.06	3.54	7.87
4	10	7.88	8 × Ø0.88	1.19	4.54	9.84
6	12.5	10.62	12 × Ø0.88	1.38	6.7	11.8
Surface roughness (flange): Ra 6.3 to 12.5 µm						

1) Length according to DVGW (German Technical and Scientific Association for Gas and Water).

Accessories

Protective cover

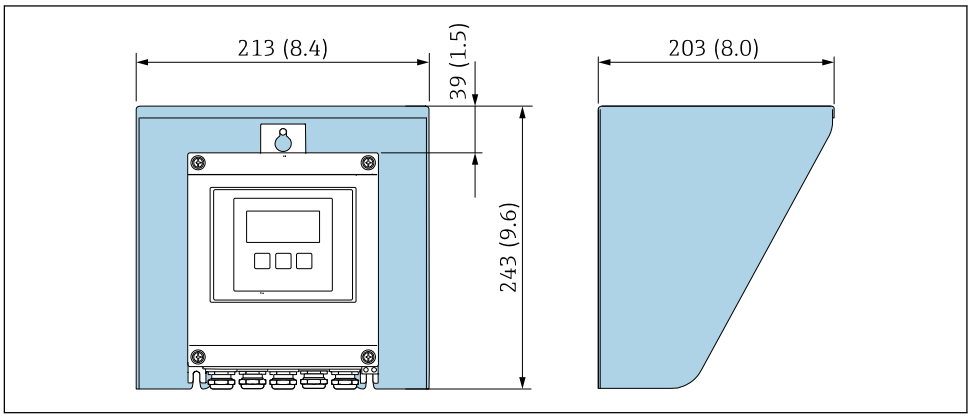

50 Weather protection cover for Proline 500 – digital

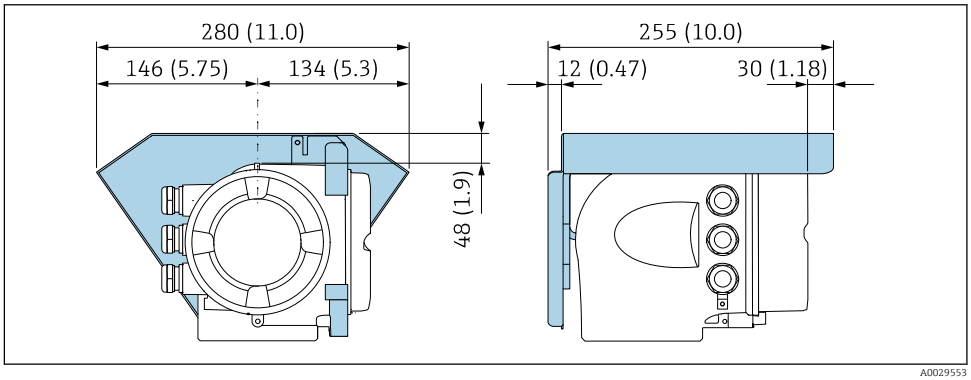

51 Weather protection cover for Proline 500

External WLAN antenna

The external WLAN antenna is not suitable for use in hygienic applications.

Proline 500 – digital

External WLAN antenna mounted on device

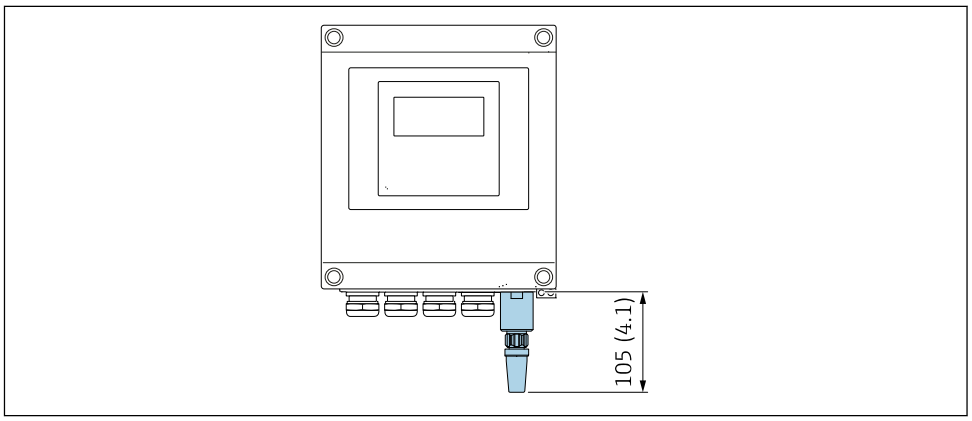

52 *Engineering unit mm (in)*

External WLAN antenna mounted with cable

The external WLAN antenna can be mounted separately from the transmitter if the transmission/ reception conditions at the transmitter mounting location are poor.

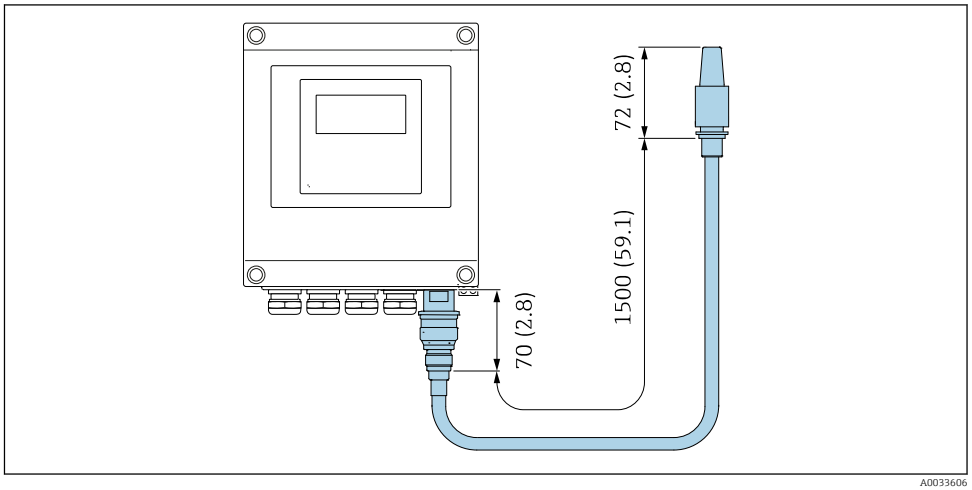

53 *Engineering unit mm (in)*

Proline 500

External WLAN antenna mounted on device

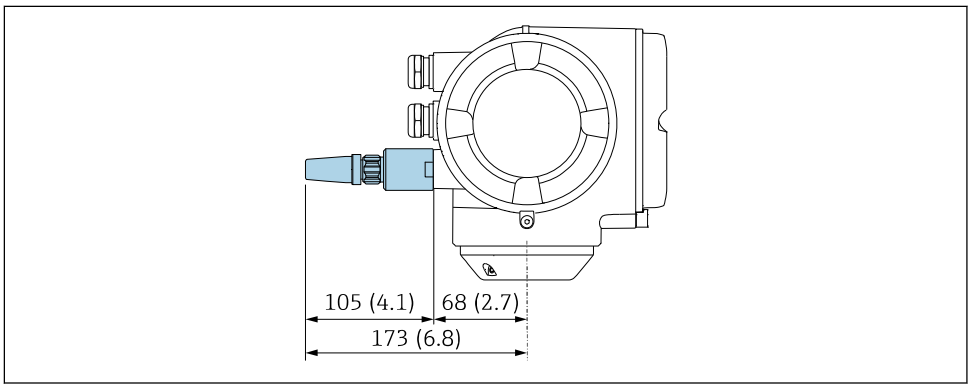

54 *Engineering unit mm (in)*

External WLAN antenna mounted with cable

The external WLAN antenna can be mounted separately from the transmitter if the transmission/ reception conditions at the transmitter mounting location are poor.

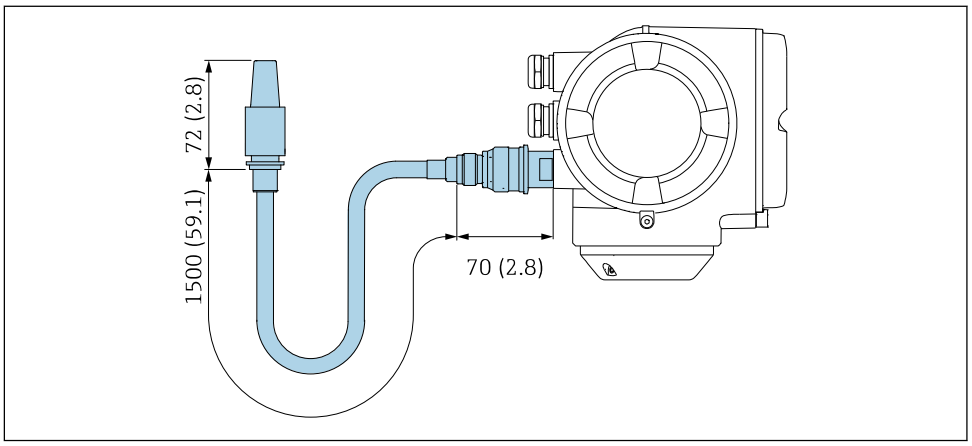

55 *Engineering unit mm (in)*

Ground disk for flange connection

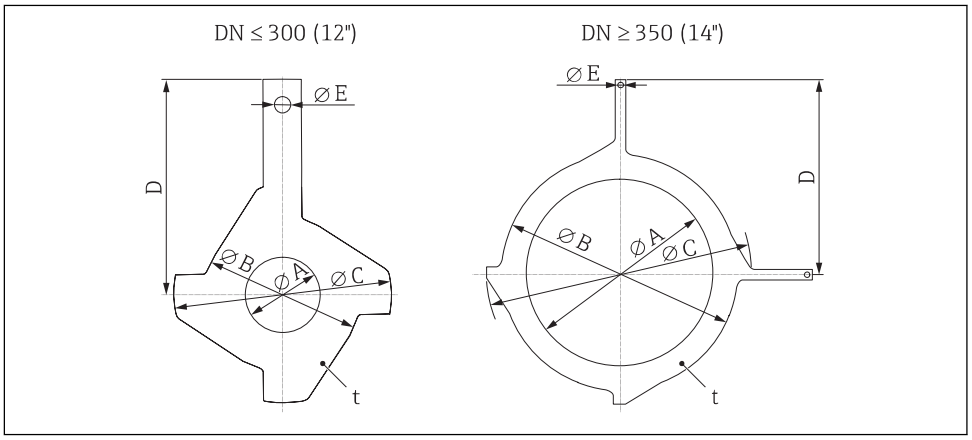

DN [1] ASME [in]	A PFA, PTFE [in]	B [in]	C [in]	D [in]	E [in]	t [in]
½	0.63	1.69	2.42	2.87	0.26	0.08
1	1.02	2.44	3.05	3.44	0.26	0.08
1 ½	1.61	3.23	3.98	4.06	0.26	0.08
2	2.05	3.98	4.55	4.25	0.26	0.08
3	3.15	5.16	6.08	5.31	0.26	0.08
4	4.09	6.14	7.34	6.02	0.26	0.08
6	6.22	8.54	10.08	7.24	0.26	0.08
8	8.11	10.51	11.34	8.07	0.26	0.08
10	10.24	12.91	14.13	9.45	0.26	0.08
12	12.28	14.76	16.26	10.75	0.26	0.08
14	13.50	17.05	18.86	14.37	0.35	0.08
16	15.47	18.90	21.34	15.55	0.35	0.08
18	17.28	21.18	22.95	16.42	0.35	0.08
20	19.41	23.31	25.59	18.11	0.35	0.08
24	23.35	27.28	30.16	20.55	0.35	0.08

1) Ground disks can be used for all available pressure ratings.

Weight

All values (weight exclusive of packaging material) refer to devices with flanges of the standard pressure rating.
The weight may be lower than indicated depending on the pressure rating and design.

Transmitter
- Proline 500 – digital polycarbonate: 1.4 kg (3.1 lbs)
- Proline 500 – digital aluminum: 2.4 kg (5.3 lbs)
- Proline 500 aluminum: 6.5 kg (14.3 lbs)
- Proline 500 cast, stainless: 15.6 kg (34.4 lbs)

Sensor
- Sensor with aluminum connection housing version: see the information in the following table
- Sensor with cast connection housing version, stainless: +3.7 kg (+8.2 lbs)

Weight in SI units

Nominal diameter		EN (DIN), AS [1]		ASME		JIS	
[mm]	[in]	Pressure rating	[kg]	Pressure rating	[kg]	Pressure rating	[kg]
15	½	PN 40	4.5	Class 150	4.5	10K	4.5
25	1	PN 40	5.3	Class 150	5.3	10K	5.3
32	–	PN 40	6	Class 150	–	10K	5.3
40	1 ½	PN 40	7.4	Class 150	7.4	10K	6.3
50	2	PN 40	8.6	Class 150	8.6	10K	7.3
65	–	PN 16	10	Class 150	–	10K	9.1
80	3	PN 16	12	Class 150	12	10K	10.5
100	4	PN 16	14	Class 150	14	10K	12.7
125	–	PN 16	19.5	Class 150	–	10K	19
150	6	PN 16	23.5	Class 150	23.5	10K	22.5
200	8	PN 10	43	Class 150	43	10K	39.9
250	10	PN 10	63	Class 150	73	10K	67.4

Nominal diameter		EN (DIN), AS [1]		ASME		JIS	
[mm]	[in]	Pressure rating	[kg]	Pressure rating	[kg]	Pressure rating	[kg]
300	12	PN 10	68	Class 150	108	10K	70.3
350	14	PN 10	103	Class 150	173	10K	79
400	16	PN 10	118	Class 150	203	10K	100
450	18	PN 10	159	Class 150	253	10K	128
500	20	PN 10	154	Class 150	283	10K	142
600	24	PN 10	206	Class 150	403	10K	188

1) For flanges to AS, only DN 25 and 50 are available.

Weight in US units

Nominal diameter		ASME	
[mm]	[in]	Pressure rating	[lbs]
15	½	Class 150	9.92
25	1	Class 150	11.7
40	1 ½	Class 150	16.3
50	2	Class 150	19.0
80	3	Class 150	26.5
100	4	Class 150	30.9
150	6	Class 150	51.8
200	8	Class 150	94.8
250	10	Class 150	161.0
300	12	Class 150	238.1
350	14	Class 150	381.5
400	16	Class 150	447.6
450	18	Class 150	557.9
500	20	Class 150	624.0
600	24	Class 150	888.6

Measuring tube specification

Nominal diameter		Pressure rating					Process connection internal diameter			
		EN (DIN)	ASME	AS 2129	AS 4087	JIS	PFA		PTFE	
[mm]	[in]	[bar]	[psi]	[bar]	[bar]	[bar]	[mm]	[in]	[mm]	[in]
15	½	PN 40	Class 150	–	–	20K	–	–	15	0.59
25	1	PN 40	Class 150	Table E	–	20K	23	0.91	26	1.02
32	–	PN 40	–	–	–	20K	32	1.26	35	1.38
40	1 ½	PN 40	Class 150	–	–	20K	36	1.42	41	1.61
50	2	PN 40	Class 150	Table E	PN 16	10K	48	1.89	52	2.05
65	–	PN 16	–	–	–	10K	63	2.48	67	2.64
80	3	PN 16	Class 150	–	–	10K	75	2.95	80	3.15
100	4	PN 16	Class 150	–	–	10K	101	3.98	104	4.09
125	–	PN 16	–	–	–	10K	126	4.96	129	5.08
150	6	PN 16	Class 150	–	–	10K	154	6.06	156	6.14

Nominal diameter		Pressure rating					Process connection internal diameter			
		EN (DIN)	ASME	AS 2129	AS 4087	JIS	PFA		PTFE	
[mm]	[in]	[bar]	[psi]	[bar]	[bar]	[bar]	[mm]	[in]	[mm]	[in]
200	8	PN 10	Class 150	–	–	10K	201	7.91	202	7.95
250	10	PN 10	Class 150	–	–	10K	–	–	256	10.1
300	12	PN 10	Class 150	–	–	10K	–	–	306	12.0
350	14	PN 10	Class 150	–	–	10K	–	–	337	13.3
400	16	PN 10	Class 150	–	–	10K	–	–	387	15.2
450	18	PN 10	Class 150	–	–	10K	–	–	432	17.0
500	20	PN 10	Class 150	–	–	10K	–	–	487	19.2
600	24	PN 10	Class 150	–	–	10K	–	–	593	23.3

Materials

Transmitter housing

Housing of Proline 500 – digital transmitter

Order code for "Transmitter housing":
- Option **A** "Aluminum coated": aluminum, AlSi10Mg, coated
- Option **D** "Polycarbonate": polycarbonate

Housing of Proline 500 transmitter

Order code for "Transmitter housing":
- Option **A** "Aluminum coated": aluminum, AlSi10Mg, coated
- Option **L** "Cast, stainless": cast, stainless steel, 1.4409 (CF3M) similar to 316L

Window material

Order code for "Transmitter housing":
- Option **A** "Aluminum, coated": glass
- Option **D** "Polycarbonate": plastic
- Option **L** "Cast, stainless": glass

Sensor connection housing

Order code for "Sensor connection housing":
- Option **A** "Aluminum coated": aluminum, AlSi10Mg, coated
- Option **L** "Cast, stainless": 1.4409 (CF3M) similar to 316L

Cable entries/cable glands

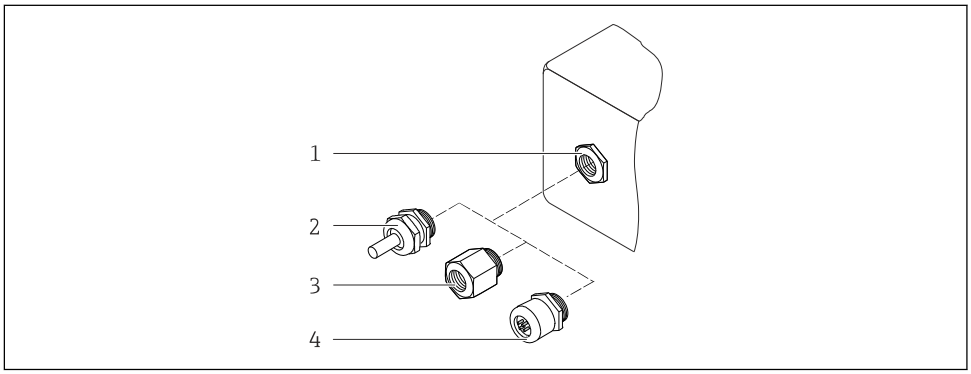

56 *Possible cable entries/cable glands*

1 *Female thread M20 × 1.5*
2 *Cable gland M20 × 1.5*
3 *Adapter for cable entry with internal thread G ½" or NPT ½"*
4 *Device plugs*

Cable entries and adapters	Material
Cable gland M20 × 1.5	Plastic

▪ Adapter for cable entry with internal thread G ½"
▪ Adapter for cable entry with internal thread NPT ½"
Only available for certain device versions:
▪ Order code for "Transmitter housing":
  ▪ Option **A** "Aluminum, coated"
  ▪ Option **D** "Polycarbonate"
▪ Order code for "Sensor connection housing":
  ▪ Proline 500 – digital:
  Option **A** "Aluminum coated"
  Option **L** "Cast, stainless"
  ▪ Proline 500:
  Option **A** "Aluminum coated"
  Option **L** "Cast, stainless"
	Nickel-plated brass

▪ Adapter for cable entry with internal thread G ½"
▪ Adapter for cable entry with internal thread NPT ½"
Only available for certain device versions:
▪ Order code for "Transmitter housing":
  Option **L** "Cast, stainless"
▪ Order code for "Sensor connection housing":
  Option **L** "Cast, stainless"
	Stainless steel, 1.4404 (316L)

Adapter for device plug Device plug for digital communication: Only available for certain device versions → 30.	Stainless steel, 1.4404 (316L)

Device plug

Electrical connection	Material
Plug M12x1	▪ Socket: Stainless steel, 1.4404 (316L) ▪ Contact housing: Polyamide ▪ Contacts: Gold-plated brass

Connecting cable

UV rays can impair the cable outer sheath. Protect the cable from exposure to sun as much as possible.

Connecting cable for sensor - Proline 500 – digital transmitter

PVC cable with copper shield

Connecting cable for sensor - Proline 500 transmitter

- Standard cable: PVC cable with copper shield
- Reinforced cable: PVC cable with copper shield and additional steel wire braided jacket

Sensor housing

- DN 15 to 300 (½ to 12"): coated aluminum AlSi10Mg
- DN 350 to 600 (14 to 24"): carbon steel with protective varnish

Measuring tubes

Stainless steel, 1.4301/304/1.4306/304L
For flanges made of carbon with Al/Zn protective coating (DN 15 to 300 (½ to 12")) or protective varnish (DN 350 to 600 (14 to 24"))

Liner

- PFA
- PTFE

Process connections

EN 1092-1 (DIN 2501)
Stainless steel, 1.4571; carbon steel, E250C [1)]/S235JRG2/P245GH

ASME B16.5
Stainless steel, F316L; carbon steel, A105 [1)]

JIS B2220
Stainless steel, F316L [1)]; carbon steel, A105/A350 LF2

AS 2129 Table E
- DN 25 (1"): carbon steel, A105/S235JRG2
- DN 40 (1 ½"): carbon steel, A105/S275JR

AS 4087 PN 16
Carbon steel, A105/S275JR

Electrodes

Stainless steel, 1.4435 (F316L); Alloy C22, 2.4602 (UNS N06022); platinum; tantalum; titanium

Seals

As per DIN EN 1514-1, form IBC

Accessories

Protective cover

Stainless steel, 1.4404 (316L)

External WLAN antenna

- Antenna: ASA plastic (acrylic ester-styrene-acrylonitrile) and nickel-plated brass
- Adapter: Stainless steel and nickel-plated brass
- Cable: Polyethylene
- Plug: Nickel-plated brass
- Angle bracket: Stainless steel

Ground disks

Stainless steel, 1.4435 (F316L); Alloy C22, 2.4602 (UNS N06022); tantalum; titanium

1) DN 15 to 300 (½ to 12") with Al/Zn protective varnish; DN 350 to 600 (14 to 24") with protective varnish

Fitted electrodes

Measuring electrodes, reference electrodes and electrodes for empty pipe detection:
- Standard: stainless steel, 1.4435 (F316L); Alloy C22, 2.4602 (UNS N06022); tantalum, titanium
- Optional: only platinum measuring electrodes

Process connections

- EN 1092-1 (DIN 2501)
- ASME B16.5
- JIS B2220
- AS 2129 Table E
- AS 4087 PN 16

For information on the different materials used in the process connections → 87

Surface roughness

Stainless steel electrodes, 1.4435 (F316L); Alloy C22, 2.4602 (UNS N06022); platinum; tantalum; titanium:
≤ 0.3 to 0.5 µm (11.8 to 19.7 µin)
(All data relate to parts in contact with fluid)

Liner with PFA:
≤ 0.4 µm (15.7 µin)
(All data relate to parts in contact with fluid)

Human interface

Operating concept

Operator-oriented menu structure for user-specific tasks
- Commissioning
- Operation
- Diagnostics
- Expert level

Fast and safe commissioning
- Guided menus ("Make-it-run" wizards) for applications
- Menu guidance with brief descriptions of the individual parameter functions
- Access to the device via Web server → 108
- WLAN access to the device via mobile handheld terminal, tablet or smart phone

Reliable operation
- Operation in local language → 88
- Uniform operating philosophy applied to device and operating tools
- If replacing electronic modules, transfer the device configuration via the integrated memory (HistoROM backup) which contains the process and measuring device data and the event logbook. No need to reconfigure.

Efficient diagnostics increase measurement availability
- Troubleshooting measures can be called up via the device and in the operating tools
- Diverse simulation options, logbook for events that occur and optional line recorder functions

Languages

Can be operated in the following languages:
- Via local operation
  English, German, French, Spanish, Italian, Dutch, Portuguese, Polish, Russian, Turkish, Chinese, Japanese, Korean, Bahasa (Indonesian), Vietnamese, Czech, Swedish
- Via Web browser
  English, German, French, Spanish, Italian, Dutch, Portuguese, Polish, Russian, Turkish, Chinese, Japanese, Korean, Bahasa (Indonesian), Vietnamese, Czech, Swedish
- Via "FieldCare", "DeviceCare" operating tool: English, German, French, Spanish, Italian, Chinese, Japanese

Local operation

Via display module

Equipment:
- Order code for "Display; operation", option F "4-line, illuminated, graphic display; touch control"
- Order code for "Display; operation", option G "4-line, illuminated, graphic display; touch control + WLAN"

Information about WLAN interface → 95

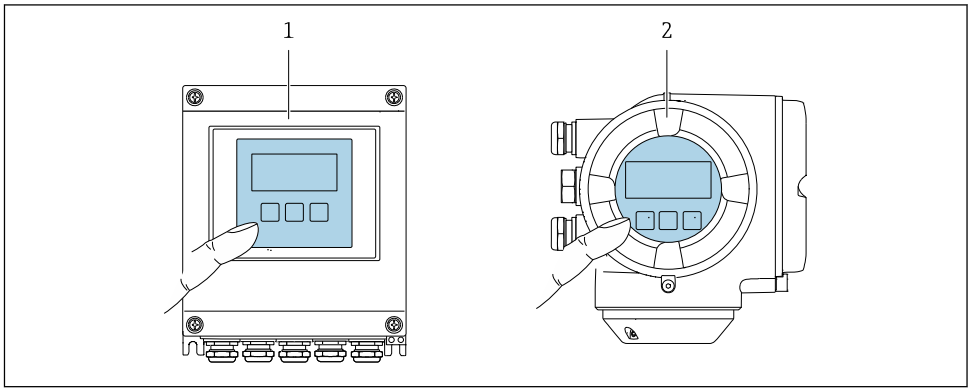

57 *Operation with touch control*

1 Proline 500 – digital
2 Proline 500

Display elements

- 4-line, illuminated, graphic display
- White background lighting; switches to red in event of device errors
- Format for displaying measured variables and status variables can be individually configured
- Permitted ambient temperature for the display: –20 to +60 °C (–4 to +140 °F)
  The readability of the display may be impaired at temperatures outside the temperature range.

Operating elements

- External operation via touch control (3 optical keys) without opening the housing: ⊞, ⊟, Ⓔ
- Operating elements also accessible in the various zones of the hazardous area

Remote operation

Via HART protocol

This communication interface is available in device versions with a HART output.

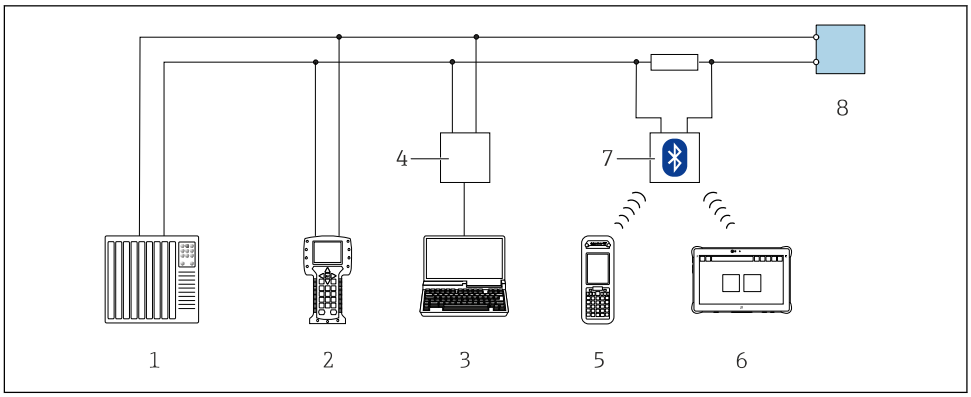

58 *Options for remote operation via HART protocol (active)*

1 *Control system (e.g. PLC)*
2 *Field Communicator 475*
3 *Computer with Web browser (e.g. Internet Explorer) for access to the integrated device Web server or computer with an operating tool (e.g. FieldCare, DeviceCare, AMS Device Manager, SIMATIC PDM) with COM DTM "CDI Communication TCP/IP"*
4 *Commubox FXA195 (USB)*
5 *Field Xpert SFX350 or SFX370*
6 *Field Xpert SMT70*
7 *VIATOR Bluetooth modem with connecting cable*
8 *Transmitter*

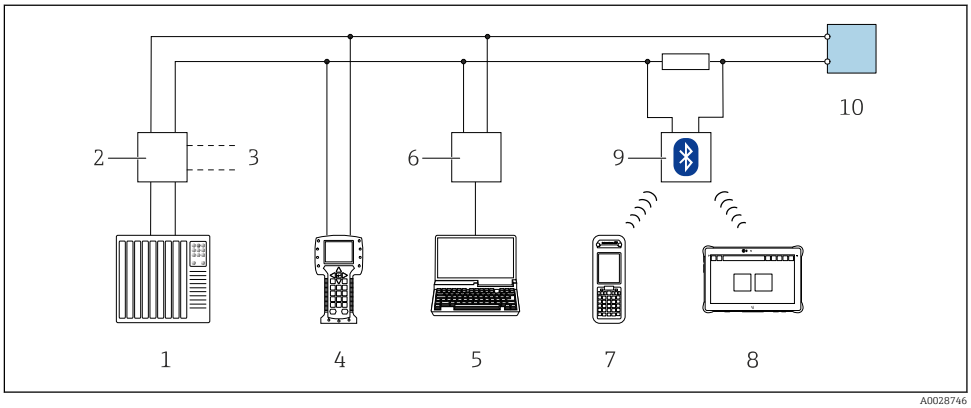

59 *Options for remote operation via HART protocol (passive)*

1 *Control system (e.g. PLC)*
2 *Transmitter power supply unit, e.g. RN221N (with communication resistor)*
3 *Connection for Commubox FXA195 and Field Communicator 475*
4 *Field Communicator 475*
5 *Computer with Web browser (e.g. Internet Explorer) for access to the integrated device Web server or computer with an operating tool (e.g. FieldCare, DeviceCare, AMS Device Manager, SIMATIC PDM) with COM DTM "CDI Communication TCP/IP"*
6 *Commubox FXA195 (USB)*
7 *Field Xpert SFX350 or SFX370*
8 *Field Xpert SMT70*
9 *VIATOR Bluetooth modem with connecting cable*
10 *Transmitter*

Via FOUNDATION Fieldbus network

This communication interface is available in device versions with FOUNDATION Fieldbus.

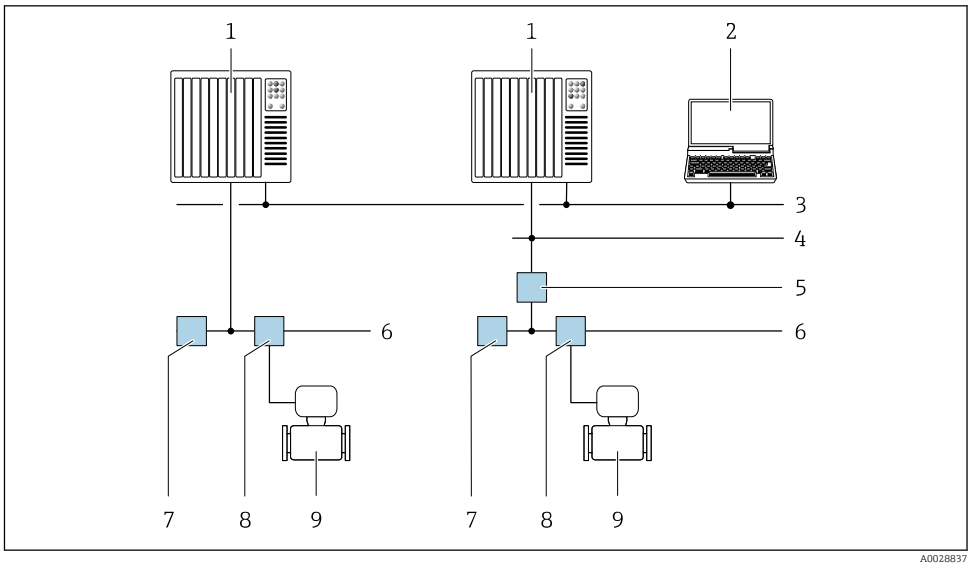

60 *Options for remote operation via FOUNDATION Fieldbus network*

1 *Automation system*
2 *Computer with FOUNDATION Fieldbus network card*
3 *Industry network*
4 *High Speed Ethernet FF-HSE network*
5 *Segment coupler FF-HSE/FF-H1*
6 *FOUNDATION Fieldbus FF-H1 network*
7 *Power supply FF-H1 network*
8 *T-box*
9 *Measuring device*

Via PROFIBUS DP network

This communication interface is available in device versions with PROFIBUS DP.

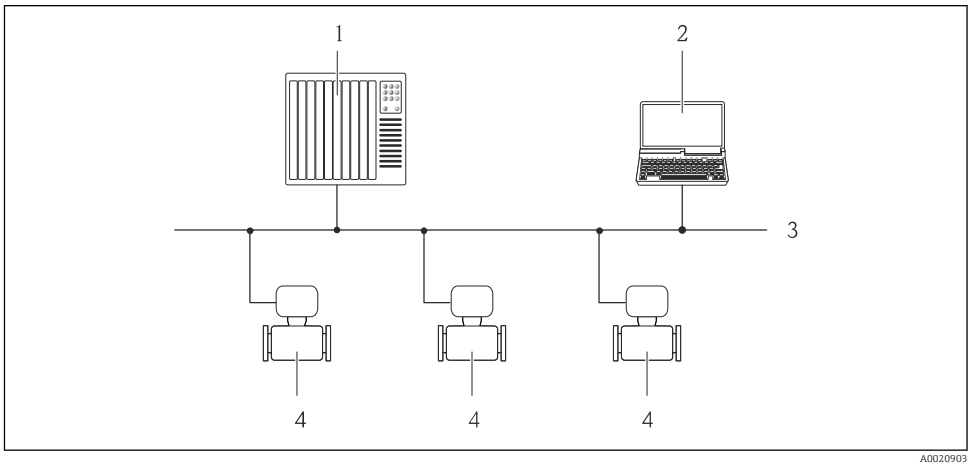

61 *Options for remote operation via PROFIBUS DP network*

1 *Automation system*
2 *Computer with PROFIBUS network card*
3 *PROFIBUS DP network*
4 *Measuring device*

Via PROFIBUS PA network

This communication interface is available in device versions with PROFIBUS PA.

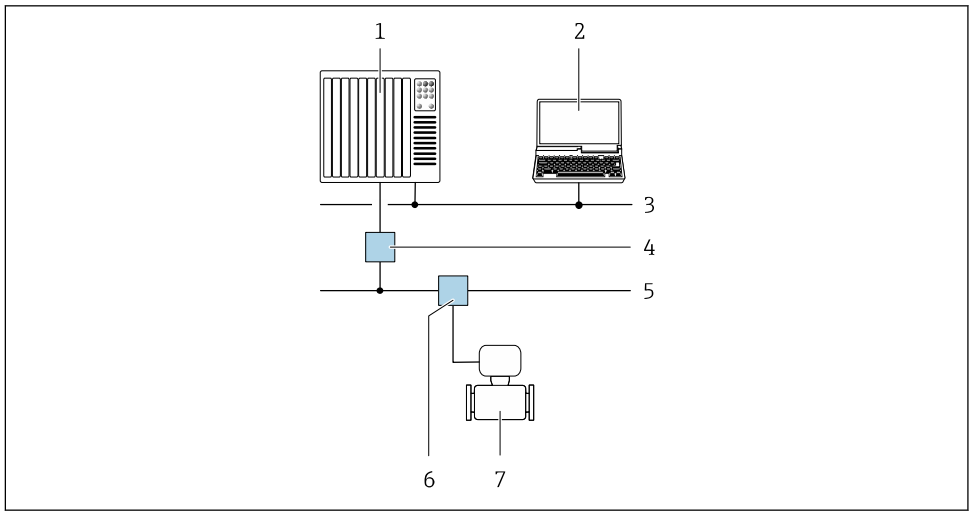

62 *Options for remote operation via PROFIBUS PA network*

1 Automation system
2 Computer with PROFIBUS network card
3 PROFIBUS DP network
4 Segment coupler PROFIBUS DP/PA
5 PROFIBUS PA network
6 T-box
7 Measuring device

Via Modbus RS485 protocol

This communication interface is available in device versions with a Modbus-RS485 output.

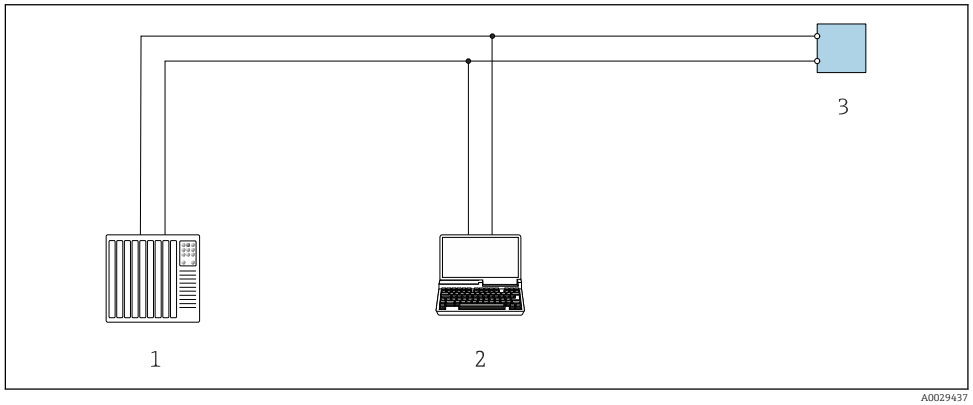

63 *Options for remote operation via Modbus-RS485 protocol (active)*

1 Control system (e.g. PLC)
2 Computer with Web browser (e.g. Internet Explorer) for accessing the integrated device Web server or with operating tool (e.g. FieldCare, DeviceCare) with COM DTM "CDI Communication TCP/IP" or Modbus DTM
3 Transmitter

Via EtherNet/IP network

This communication interface is available in device versions with EtherNet/IP.

Star topology

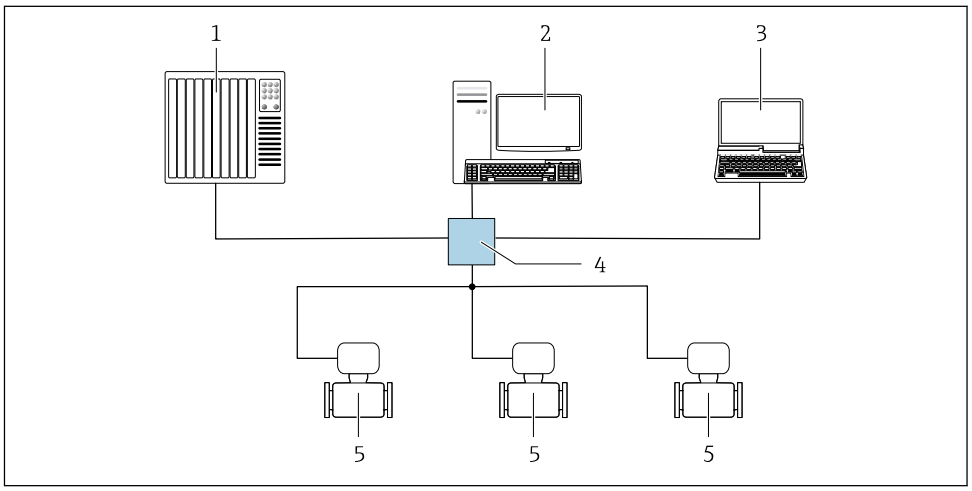

64 *Options for remote operation via EtherNet/IP network: star topology*

1 *Automation system, e.g. "RSLogix" (Rockwell Automation)*
2 *Workstation for measuring device operation: with Custom Add-On Profile for "RSLogix 5000" (Rockwell Automation) or with Electronic Data Sheet (EDS)*
3 *Computer with Web browser (e.g. Internet Explorer) for accessing the integrated device Web server or computer with operating tool (e.g. FieldCare, DeviceCare) with COM DTM "CDI Communication TCP/IP"*
4 *Ethernet switch*
5 *Measuring device*

Ring topology

The device is integrated via the terminal connection for signal transmission (output 1) and the service interface (CDI-RJ45).

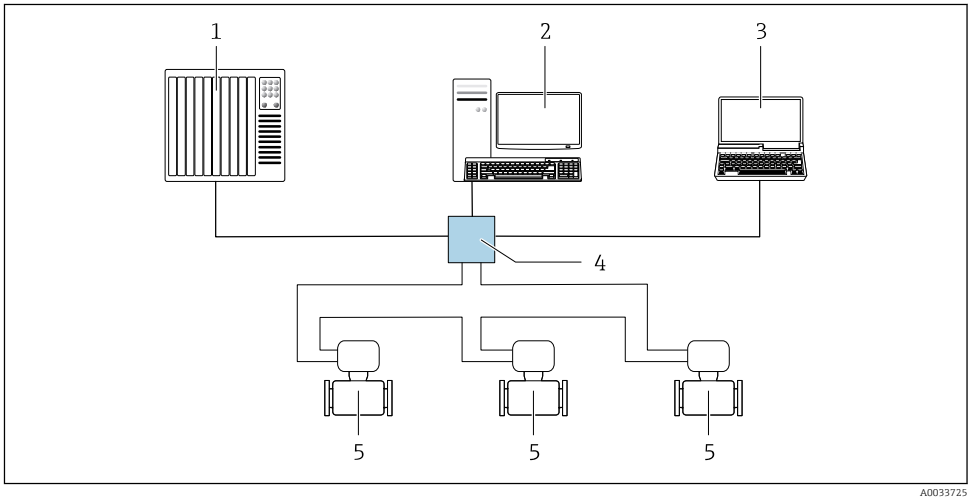

65 *Options for remote operation via EtherNet/IP network: ring topology*

1 *Automation system, e.g. "RSLogix" (Rockwell Automation)*
2 *Workstation for measuring device operation: with Custom Add-On Profile for "RSLogix 5000" (Rockwell Automation) or with Electronic Data Sheet (EDS)*
3 *Computer with Web browser (e.g. Internet Explorer) for accessing the integrated device Web server or computer with operating tool (e.g. FieldCare, DeviceCare) with COM DTM "CDI Communication TCP/IP"*
4 *Ethernet switch*
5 *Measuring device*

Via PROFINET network

This communication interface is available in device versions with PROFINET.

Star topology

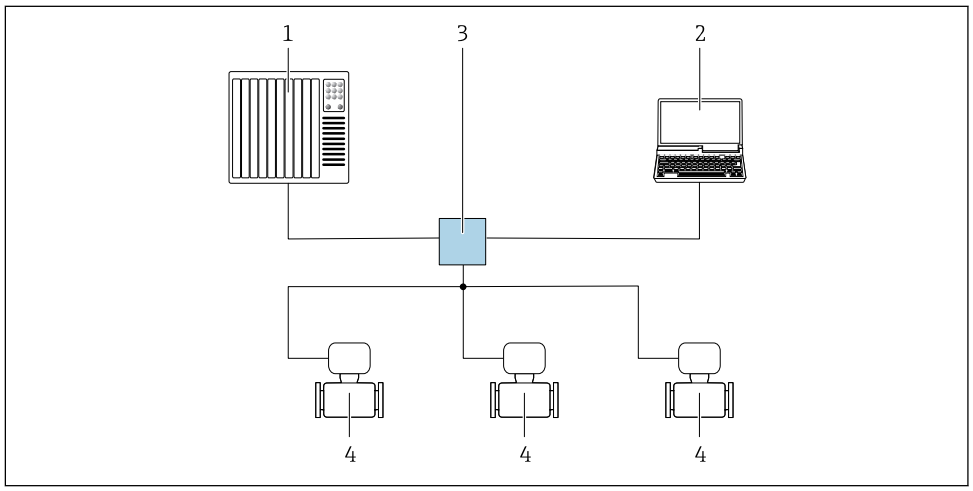

66 Options for remote operation via PROFINET network: star topology

1 *Automation system, e.g. Simatic S7 (Siemens)*
2 *Computer with Web browser (e.g. Internet Explorer) for accessing the integrated device Web server or computer with operating tool (e.g. FieldCare, DeviceCare, SIMATIC PDM) with COM DTM "CDI Communication TCP/IP"*
3 *Switch, e.g. Scalance X204 (Siemens)*
4 *Measuring device*

Ring topology

The device is integrated via the terminal connection for signal transmission (output 1) and the service interface (CDI-RJ45).

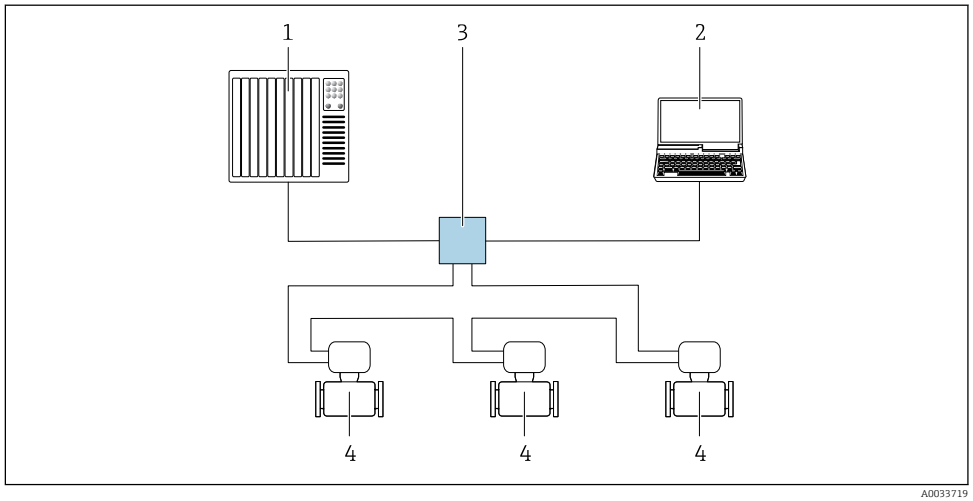

67 Options for remote operation via PROFINET network: ring topology

1 *Automation system, e.g. Simatic S7 (Siemens)*
2 *Computer with Web browser (e.g. Internet Explorer) for accessing the integrated device Web server or computer with operating tool (e.g. FieldCare, DeviceCare, SIMATIC PDM) with COM DTM "CDI Communication TCP/IP"*
3 *Switch, e.g. Scalance X204 (Siemens)*
4 *Measuring device*

Service interface

Via service interface (CDI-RJ45)

A point-to-point connection can be established to configure the device onsite. With the housing open, the connection is established directly via the service interface (CDI-RJ45) of the device.

An adapter for RJ45 and the M12 connector is optionally available:
Order code for "Accessories", option **NB**: "Adapter RJ45 M12 (service interface)"

The adapter connects the service interface (CDI-RJ45) to an M12 connector mounted in the cable entry. Therefore the connection to the service interface can be established via an M12 connector without opening the device.

Proline 500 – digital transmitter

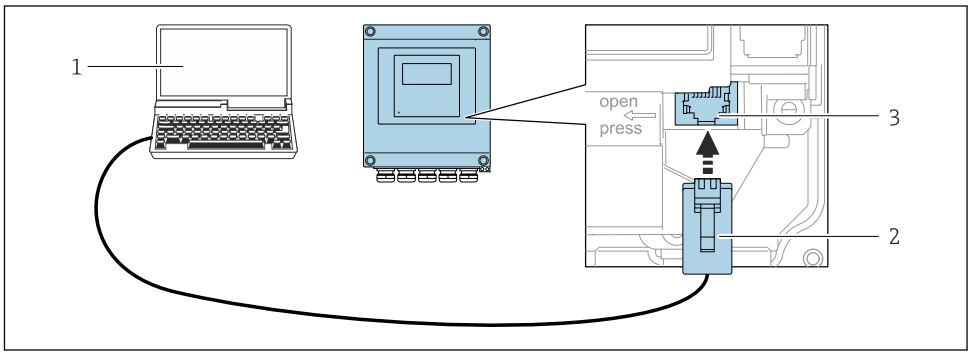

68 *Connection via service interface (CDI-RJ45)*

1 *Computer with Web browser (e.g. Microsoft Internet Explorer, Microsoft Edge) for accessing the integrated device Web server or with "FieldCare", "DeviceCare" operating tool with COM DTM "CDI Communication TCP/IP" or Modbus DTM*
2 *Standard Ethernet connecting cable with RJ45 connector*
3 *Service interface (CDI-RJ45) of the measuring device with access to the integrated Web server*

Proline 500 transmitter

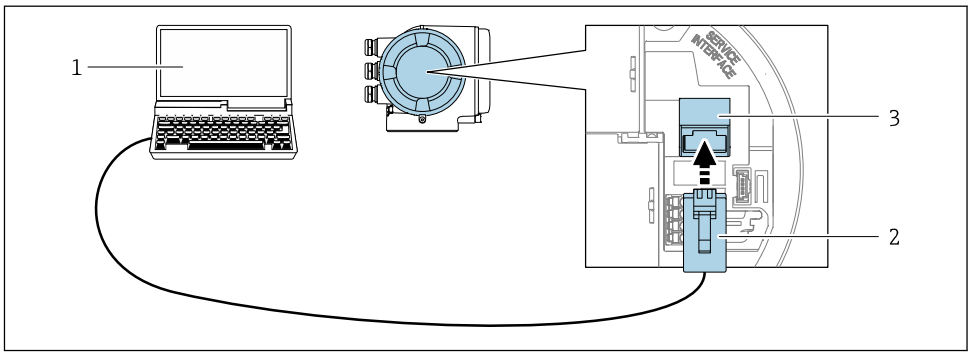

69 *Connection via service interface (CDI-RJ45)*

1 *Computer with Web browser (e.g. Microsoft Internet Explorer, Microsoft Edge) for accessing the integrated device Web server or with "FieldCare", "DeviceCare" operating tool with COM DTM "CDI Communication TCP/IP" or Modbus DTM*
2 *Standard Ethernet connecting cable with RJ45 connector*
3 *Service interface (CDI-RJ45) of the measuring device with access to the integrated Web server*

Via WLAN interface

The optional WLAN interface is available on the following device version:
Order code for "Display; operation", option G "4-line, illuminated; touch control + WLAN"

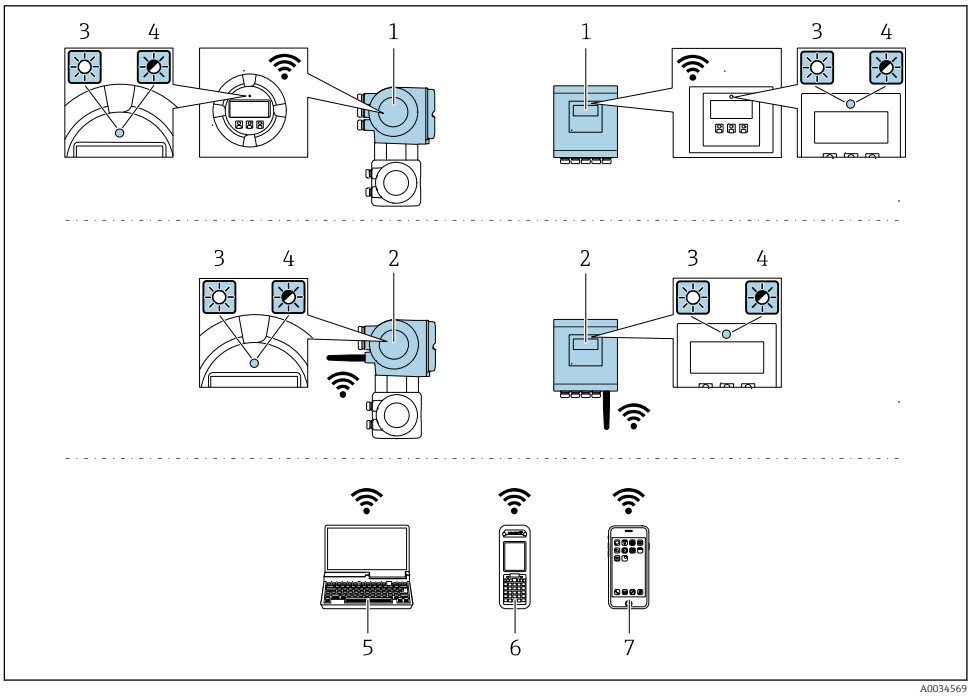

1 *Transmitter with integrated WLAN antenna*
2 *Transmitter with external WLAN antenna*
3 *LED lit constantly: WLAN reception is enabled on measuring device*
4 *LED flashing: WLAN connection established between operating unit and measuring device*
5 *Computer with WLAN interface and Web browser (e.g. Microsoft Internet Explorer, Microsoft Edge) for accessing the integrated device Web server or with operating tool (e.g. FieldCare, DeviceCare)*
6 *Mobile handheld terminal with WLAN interface and Web browser (e.g. Microsoft Internet Explorer, Microsoft Edge) for accessing the integrated device Web server or operating tool (e.g. FieldCare, DeviceCare)*
7 *Smart phone or tablet (e.g. Field Xpert SMT70)*

Function	WLAN: IEEE 802.11 b/g (2.4 GHz) ▪ Access point with DHCP server (default setting) ▪ Network
Encryption	WPA2-PSK AES-128 (in accordance with IEEE 802.11i)
Configurable WLAN channels	1 to 11
Degree of protection	IP67
Available antennas	▪ Internal antenna ▪ External antenna (optional) In the event of poor transmission/reception conditions at the place of installation. Available as an accessory → 106. Only one antenna active in each case!
Range	▪ Internal antenna: typically 10 m (32 ft) ▪ External antenna: typically 50 m (164 ft)
Materials (external antenna)	▪ Antenna: ASA plastic (acrylic ester-styrene-acrylonitrile) and nickel-plated brass ▪ Adapter: Stainless steel and nickel-plated brass ▪ Cable: Polyethylene ▪ Connector: Nickel-plated brass ▪ Angle bracket: Stainless steel

Network integration

With the optional "OPC-UA Server" application package, the device can be integrated into an Ethernet network via the service interface (CDI-RJ45 and WLAN) and communicate with OPC-UA clients. If the device is used in this way, IT security must be considered.

Transmitters with an Ex de approval may **not** be connected via the service interface (CDI-RJ45)!
Order code for "Approval transmitter + sensor", options (Ex de):
BB, C2, GB, MB, NB

For permanent access to device data and for device configuration via the Web server, the device is incorporated directly in a network via the service interface (CDI-RJ45). In this way, the device can be accessed any time from the control station. The measured values are processed separately via the inputs and outputs through the automation system.

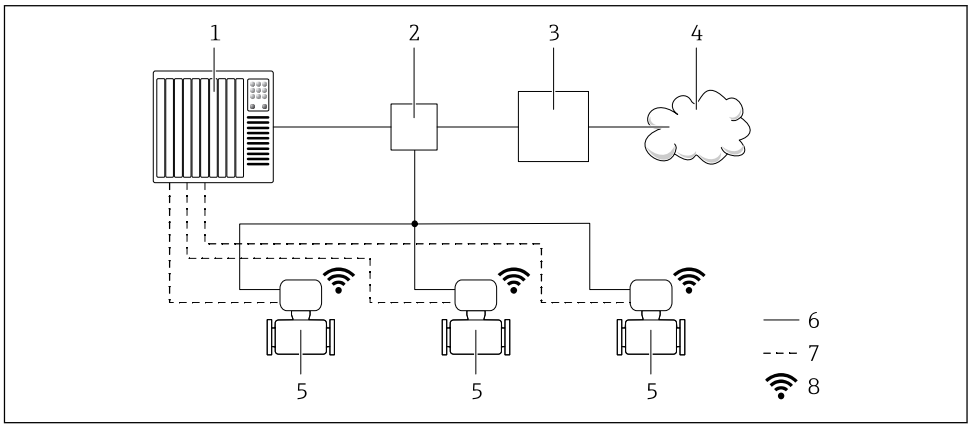

1 *Automation system, e.g. Simatic S7 (Siemens)*
2 *Ethernet switch*
3 *Edge Gateway*
4 *Cloud*
5 *Measuring device*
6 *Ethernet network*
7 *Measured values via inputs and outputs*
8 *Optional WLAN interface*

The optional WLAN interface is available on the following device version:
Order code for "Display; operation", option **G** "4-line, illuminated, graphic display; touch control + WLAN"

Special Documentation for the OPC-UA Server application package → 110.

Supported operating tools

Different operating tools can be used for local or remote access to the measuring device. Depending on the operating tool used, access is possible with different operating units and via a variety of interfaces.

Supported operating tools	Operating unit	Interface	Additional information
Web browser	Notebook, PC or tablet with Web browser	▪ CDI-RJ45 service interface ▪ WLAN interface ▪ Ethernet-based fieldbus (EtherNet/IP, PROFINET)	Special Documentation for device
DeviceCare SFE100	Notebook, PC or tablet with Microsoft Windows system	▪ CDI-RJ45 service interface ▪ WLAN interface ▪ Fieldbus protocol	→ 108

Supported operating tools	Operating unit	Interface	Additional information
FieldCare SFE500	Notebook, PC or tablet with Microsoft Windows system	▪ CDI-RJ45 service interface ▪ WLAN interface ▪ Fieldbus protocol	→ 🖹 108
Device Xpert	Field Xpert SFX 100/350/370	HART and FOUNDATION Fieldbus fieldbus protocol	Operating Instructions BA01202S Device description files: Use update function of handheld terminal

Other operating tools based on FDT technology with a device driver such as DTM/iDTM or DD/EDD can be used for device operation. These operating tools are available from the individual manufacturers. Integration into the following operating tools, among others, is supported:

- FactoryTalk AssetCentre (FTAC) by Rockwell Automation → www.rockwellautomation.com
- Process Device Manager (PDM) by Siemens → www.siemens.com
- Asset Management Solutions (AMS) by Emerson → www.emersonprocess.com
- FieldCommunicator 375/475 by Emerson → www.emersonprocess.com
- Field Device Manager (FDM) by Honeywell → www.honeywellprocess.com
- FieldMate by Yokogawa → www.yokogawa.com
- PACTWare → www.pactware.com

The associated device description files are available at: www.endress.com → Downloads

Web server

Thanks to the integrated Web server, the device can be operated and configured via a Web browser and via a service interface (CDI-RJ45) or via a WLAN interface. The structure of the operating menu is the same as for the local display. In addition to the measured values, status information on the device is also displayed and allows the user to monitor the status of the device. Furthermore the device data can be managed and the network parameters can be configured.

A device that has a WLAN interface (can be ordered as an option) is required for the WLAN connection: order code for "Display; operation", option G "4-line, illuminated; touch control + WLAN". The device acts as an Access Point and enables communication by computer or a mobile handheld terminal.

Supported functions
Data exchange between the operating unit (such as a notebook for example) and the measuring device:
- Upload the configuration from the measuring device (XML format, configuration backup)
- Save the configuration to the measuring device (XML format, restore configuration)
- Export event list (.csv file)
- Export parameter settings (.csv file or PDF file, document the measuring point configuration)
- Export the Heartbeat verification log (PDF file, only available with the "Heartbeat Verification" application package)
- Flash firmware version for device firmware upgrade, for instance
- Download driver for system integration
- Visualize up to 1000 saved measured values (only available with the **Extended HistoROM** application package → 🖹 105)

Web server special documentation → 🖹 110

HistoROM data management

The measuring device features HistoROM data management. HistoROM data management comprises both the storage and import/export of key device and process data, making operation and servicing far more reliable, secure and efficient.

When the device is delivered, the factory settings of the configuration data are stored as a backup in the device memory. This memory can be overwritten with an updated data record, for example after commissioning.

Additional information on the data storage concept

There are different types of data storage units in which device data are stored and used by the device:

	Device memory	T-DAT	S-DAT

Available data	▪ Event logbook such as diagnostic events for example
	▪ Parameter data record backup
	▪ Device firmware package
	▪ Driver for system integration for exporting via Web server, e.g:
	  ▪ GSD for PROFIBUS DP
	  ▪ GSD for PROFIBUS PA
	  ▪ GSDML for PROFINET
	  ▪ EDS for EtherNet/IP
	  ▪ DD for FOUNDATION Fieldbus
		▪ Measured value logging ("Extended HistoROM" order option)
		▪ Current parameter data record (used by firmware at run time)
		▪ Peakhold indicator (min/max values)
		▪ Totalizer values
			▪ Sensor data: nominal diameter etc.
			▪ Serial number
			▪ Calibration data
			▪ Device configuration (e.g. SW options, fixed I/O or multi I/O)

Storage location	Fixed on the user interface board in the connection compartment	Attachable to the user interface board in the connection compartment	In the sensor plug in the transmitter neck part

Data backup

Automatic
- The most important device data (sensor and transmitter) are automatically saved in the DAT modules
- If the transmitter or measuring device is replaced: once the T-DAT containing the previous device data has been exchanged, the new measuring device is ready for operation again immediately without any errors
- If the sensor is replaced: once the sensor has been replaced, new sensor data are transferred from the S-DAT in the measuring device and the measuring device is ready for operation again immediately without any errors
- If exchanging the electronics module (e.g. I/O electronics module): Once the electronics module has been replaced, the software of the module is compared against the current device firmware. The module software is upgraded or downgraded where necessary. The electronics module is available for use immediately afterwards and no compatibility problems occur.

Manual
Additional parameter data record (complete parameter settings) in the integrated device memory HistoROM backup for:
- Data backup function
  Backup and subsequent restoration of a device configuration in the device memory HistoROM backup
- Data comparison function
  Comparison of the current device configuration with the device configuration saved in the device memory HistoROM backup

Data transfer

Manual
- Transfer of a device configuration to another device using the export function of the specific operating tool, e.g. with FieldCare, DeviceCare or Web server: to duplicate the configuration or to store in an archive (e.g. for backup purposes)
- Transmission of the drivers for system integration via Web server, e.g.:
  - GSD for PROFIBUS DP
  - GSD for PROFIBUS PA
  - GSDML for PROFINET
  - EDS for EtherNet/IP
  - DD for FOUNDATION Fieldbus

Event list

Automatic
- Chronological display of up to 20 event messages in the events list
- If the **Extended HistoROM** application package (order option) is enabled: up to 100 event messages are displayed in the events list along with a time stamp, plain text description and remedial measures
- The events list can be exported and displayed via a variety of interfaces and operating tools e.g. DeviceCare, FieldCare or Web server

Data logging

Manual
If the **Extended HistoROM** application package (order option) is enabled:
- Record up to 1 000 measured values via 1 to 4 channels
- User configurable recording interval
- Record up to 250 measured values via each of the 4 memory channels
- Export the measured value log via a variety of interfaces and operating tools e.g. FieldCare, DeviceCare or web server

Certificates and approvals

Currently available certificates and approvals can be called up via the product configurator.

CE mark

The device meets the legal requirements of the applicable EU Directives. These are listed in the corresponding EU Declaration of Conformity along with the standards applied.

Endress+Hauser confirms successful testing of the device by affixing to it the CE mark.

RCM-tick symbol

The measuring system meets the EMC requirements of the "Australian Communications and Media Authority (ACMA)".

Ex approval

The measuring device is certified for use in hazardous areas and the relevant safety instructions are provided in the separate "Safety Instructions" (XA) document. Reference is made to this document on the nameplate.

The separate Ex documentation (XA) containing all the relevant explosion protection data is available from your Endress+Hauser sales center.

Proline 500 – digital

ATEX, IECEx

Currently, the following versions for use in hazardous areas are available:

Ex ia, Ex db

Transmitter		Sensor	
Category	**Type of protection**	**Category**	**Type of protection**
II(1)G	[Ex ia] IIC	II2G	Ex db ia IIC T6...T1 Gb
II3(1)G	Ex ec [ia Ga] IIC T5...T4 Gc	II2G	Ex db ia IIC T6...T1 Gb

Ex tb

Transmitter		Sensor	
Category	**Type of protection**	**Category**	**Type of protection**
II(1)D	[Ex ia] IIIC	II2D	Ex ia tb IIIC T** °C Db

Non-Ex, Ex ec

Transmitter		Sensor	
Category	**Type of protection**	**Category**	**Type of protection**
Non-Ex	Non-Ex	II3G	Ex ec ic IIC T5...T1 Gc
II3G	Ex ec IIC T5...T4 Gc	II3G	Ex ec ic IIC T5...T1 Gc

cCSAus

Currently, the following versions for use in hazardous areas are available:

IS (Ex nA, Ex i)

Transmitter	Sensor
Class I Division 2 Groups A - D	Class I, II, III Division 1 Groups A-G

NI (Ex nA)

Transmitter	Sensor
Class I Division 2 Groups A - D	

Ex nA, Ex i

Transmitter	Sensor
Class I, Zone 2 AEx/ Ex nA [ia Ga] IIC T5...T4 Gb	Class I, Zone 1 AEx/ Ex d ia IIC T6...T1 Gb

Ex nA

Transmitter	Sensor
Class I, Zone 2 AEx/ Ex nA IIC T5...T4 Gc	Class I, Zone 2 AEx/Ex nA ic IIC T5...T1 Gc

Ex tb

Transmitter	Sensor
[AEx / Ex ia] IIIC	Zone 21 AEx/ Ex ia tb IIIC T** °C Db

Proline 500

ATEX, IECEx

Currently, the following versions for use in hazardous areas are available:

Ex db eb

Category	Type of protection	
	Transmitter	Sensor
II2G	Ex db eb ia IIC T6...T4 Gb	Ex eb ia IIC T6...T1 Gb

Ex db

Category	Type of protection	
	Transmitter	Sensor
II2G	Ex db ia IIC T6...T4 Gb	Ex eb ia IIC T6...T1 Gb

Ex tb

Category	Type of protection	
	Transmitter	Sensor
II2G	Ex tb IIIC T85°C Db	Ex ia tb IIIC T** °C Db

Ex ec

Category	Type of protection	
	Transmitter	Sensor
II3G	Ex ec IIC T5...T4 Gc	Ex ec ic IIC T5...T1 Gc

cCSAus

Currently, the following versions for use in hazardous areas are available:

IS (Ex i), XP (Ex d)

Transmitter	Sensor
Class I, III, III Division 1 Groups A-G	

NI (Ex nA)

Transmitter	Sensor
Class I Division 2 Groups A - D	

Ex de

Transmitter	Sensor
Class I, Zone 1 AEx/ Ex de ia IIC T6...T4 Gb	Class I, Zone 1 AEx/Ex e ia IIC T6...T1 Gb

Ex d

Transmitter	Sensor
Class I, Zone 1 AEx/ Ex d ia IIC T6...T4 Gb	Class I, Zone 1 AEx/Ex e ia IIC T6...T1 Gb

Ex nA

Transmitter	Sensor
Class I, Zone 2 AEx/ Ex nA IIC T5...T4 Gc	Class I, Zone 2 AEx/Ex nA ic IIC T5...T1 Gc

Ex tb

Transmitter	Sensor
Zone 21 AEx/ Ex tb IIIC T85 °C Db	Zone 21 AEx/ Ex ia tb IIIC T** °C Db

Pharmaceutical compatibility

- FDA
- USP Class VI
- TSE/BSE Certificate of Suitability

Functional safety

The measuring device can be used for flow monitoring systems (min., max., range) up to SIL 2 (single-channel architecture; order code for "Additional approval", option LA) and SIL 3 (multichannel architecture with homogeneous redundancy) and is independently evaluated and certified by the TÜV in accordance with IEC 61508.

The following types of monitoring in safety equipment are possible:

Functional Safety Manual with information on the SIL device → 📄 109

HART certification

HART interface

The measuring device is certified and registered by the FieldComm Group. The measuring system meets all the requirements of the following specifications:

- Certified according to HART 7
- The device can also be operated with certified devices of other manufacturers (interoperability)

FOUNDATION Fieldbus certification

FOUNDATION Fieldbus interface

The measuring device is certified and registered by the FieldComm Group. The measuring system meets all the requirements of the following specifications:
- Certified in accordance with FOUNDATION Fieldbus H1
- Interoperability Test Kit (ITK), revision version 6.2.0 (certificate available on request)
- Physical Layer Conformance Test
- The device can also be operated with certified devices of other manufacturers (interoperability)

Certification PROFIBUS

PROFIBUS interface

The measuring device is certified and registered by the PNO (PROFIBUS User Organization Organization). The measuring system meets all the requirements of the following specifications:
- Certified in accordance with PROFIBUS PA Profile 3.02
- The device can also be operated with certified devices of other manufacturers (interoperability)

EtherNet/IP certification

The measuring device is certified and registered by the ODVA (Open Device Vendor Association). The measuring system meets all the requirements of the following specifications:
- Certified in accordance with the ODVA Conformance Test
- EtherNet/IP Performance Test
- EtherNet/IP PlugFest compliance
- The device can also be operated with certified devices of other manufacturers (interoperability)

Certification PROFINET

PROFINET interface

The measuring device is certified and registered by the PNO (PROFIBUS User Organization). The measuring system meets all the requirements of the following specifications:
- Certified according to:
  - Test specification for PROFINET devices
  - PROFINET Security Level 2 – Netload Class
- The device can also be operated with certified devices of other manufacturers (interoperability)
- The device supports PROFINET S2 system redundancy.

Radio approval

The measuring device has radio approval.

For detailed information regarding radio approval, see Special Documentation

Pressure Equipment Directive

The devices can be ordered with or without a PED approval. If a device with a PED approval is required, this must be explicitly stated in the order. For devices with nominal diameters less than or equal to DN 25 (1"), this is neither possible nor necessary.

- With the identification PED/G1/x (x = category) on the sensor nameplate, Endress+Hauser confirms conformity with the "Essential Safety Requirements" specified in Appendix I of the Pressure Equipment Directive 2014/68/EU.
- Devices bearing this marking (PED) are suitable for the following types of medium: Media in Group 1 and 2 with a vapor pressure greater than, or smaller and equal to0.5 bar (7.3 psi)
- Devices not bearing this marking (PED) are designed and manufactured according to good engineering practice. They meet the requirements of Article 4 paragraph 3 of the Pressure Equipment Directive 2014/68/EU. The range of application is indicated in tables 6 to 9 in Annex II of the Pressure Equipment Directive 2014/68/EU.

Measuring instrument approval

The measuring device is qualified to OIML R117 and has an OIML Certificate of Conformity (optional).

Additional certification

PWIS-free

PWIS = paint-wetting impairment substances

Order code for "Service":
- Option **HC**: PWIS-free (version A)
- Option **HD**: PWIS-free (version B)
- Option **HE**: PWIS-free (version C)

For more information on PWIS-free certification, see "Test specification" document TS01028D

Other standards and guidelines

- EN 60529
  Degrees of protection provided by enclosures (IP code)
- EN 61010-1
  Safety requirements for electrical equipment for measurement, control and laboratory use - general requirements
- IEC/EN 61326
  Emission in accordance with Class A requirements. Electromagnetic compatibility (EMC requirements).
- NAMUR NE 21
  Electromagnetic compatibility (EMC) of industrial process and laboratory control equipment
- NAMUR NE 32
  Data retention in the event of a power failure in field and control instruments with microprocessors
- NAMUR NE 43
  Standardization of the signal level for the breakdown information of digital transmitters with analog output signal.
- NAMUR NE 53
  Software of field devices and signal-processing devices with digital electronics
- NAMUR NE 105
  Specifications for integrating fieldbus devices in engineering tools for field devices
- NAMUR NE 107
  Self-monitoring and diagnosis of field devices
- NAMUR NE 131
  Requirements for field devices for standard applications

Ordering information

Detailed ordering information is available for your nearest sales organization www.addresses.endress.com or in the Product Configurator under www.endress.com :

1. Click Corporate
2. Select the country
3. Click Products
4. Select the product using the filters and search field
5. Open the product page

The Configuration button to the right of the product image opens the Product Configurator.

Product Configurator - the tool for individual product configuration
- Up-to-the-minute configuration data
- Depending on the device: Direct input of measuring point-specific information such as measuring range or operating language
- Automatic verification of exclusion criteria
- Automatic creation of the order code and its breakdown in PDF or Excel output format
- Ability to order directly in the Endress+Hauser Online Shop

Application packages

Many different application packages are available to enhance the functionality of the device. Such packages might be needed to address safety aspects or specific application requirements.

The application packages can be ordered with the device or subsequently from Endress+Hauser. Detailed information on the order code in question is available from your local Endress+Hauser sales center or on the product page of the Endress+Hauser website: www.endress.com.

Diagnostics functions

Package	Description
Extended HistoROM	Comprises extended functions concerning the event log and the activation of the measured value memory. Event log: Memory volume is extended from 20 message entries (standard version) to up to 100 entries. Data logging (line recorder): ▪ Memory capacity for up to 1000 measured values is activated. ▪ 250 measured values can be output via each of the 4 memory channels. The recording interval can be defined and configured by the user. ▪ Measured value logs can be accessed via the local display or operating tool e.g. FieldCare, DeviceCare or Web server.

Heartbeat Technology

Package	Description
Heartbeat Verification +Monitoring	**Heartbeat Verification** Meets the requirement for traceable verification to DIN ISO 9001:2008 Chapter 7.6 a) "Control of monitoring and measuring equipment". ▪ Functional testing in the installed state without interrupting the process. ▪ Traceable verification results on request, including a report. ▪ Simple testing process via local operation or other operating interfaces. ▪ Clear measuring point assessment (pass/fail) with high test coverage within the framework of manufacturer specifications. ▪ Extension of calibration intervals according to operator's risk assessment. **Heartbeat Monitoring** Continuously supplies data, which are characteristic of the measuring principle, to an external condition monitoring system for the purpose of preventive maintenance or process analysis. These data enable the operator to: ▪ Draw conclusions - using these data and other information - about the impact process influences (such as corrosion, abrasion, buildup etc.) have on the measuring performance over time. ▪ Schedule servicing in time. ▪ Monitor the process or product quality, e.g. gas pockets.

Cleaning

Package	Description
Electrode cleaning circuit (ECC)	The electrode cleaning circuit (ECC) function has been developed to have a solution for applications where magnetite (Fe_3O_4) deposits frequently occur (e.g. hot water). Since magnetite is highly conductive this build up leads to measuring errors and ultimately to the loss of signal. The application package is designed to AVOID build up of highly conductive matter and thin layers (typical of magnetite).

OPC-UA server

Package	Description
OPC-UA-Server	The application package provides the user with an integrated OPC-UA server for comprehensive instrument services for IoT and SCADA applications. Special Documentation for the "OPC-UA-Server" application package → 110.

Accessories

Various accessories, which can be ordered with the device or subsequently from Endress+Hauser, are available for the device. Detailed information on the order code in question is available from your local Endress+Hauser sales center or on the product page of the Endress+Hauser website: www.endress.com.

Device-specific accessories

For the transmitter

Accessories	Description
Transmitter ▪ Proline 500 – digital ▪ Proline 500	Transmitter for replacement or storage. Use the order code to define the following specifications: ▪ Approvals ▪ Output ▪ Input ▪ Display/operation ▪ Housing ▪ Software ▪ Proline 500 – digital transmitter: Order code: 5X5BXX-*********A ▪ Proline 500 transmitter: Order code: 5X5BXX-*********B Proline 500 transmitter for replacement: It is essential to specify the serial number of the current transmitter when ordering. Based on the serial number, the device-specific data (e.g., calibration factors) of the replacement device can be used for the new transmitter. ▪ Proline 500 – digital transmitter: Installation Instructions EA01151D ▪ Proline 500 transmitter: Installation Instructions EA01152D
External WLAN antenna	External WLAN antenna with 1.5 m (59.1 in) connecting cable and two angle brackets. Order code for "Accessory enclosed", option P8 "Wireless antenna wide area". ▪ The external WLAN antenna is not suitable for use in hygienic applications. ▪ Further information on the WLAN interface → 🖹 95. Order number: 71351317 Installation Instructions EA01238D
Pipe mounting set	Pipe mounting set for transmitter. Proline 500 – digital transmitter Order number: 71346427 Installation Instructions EA01195D Proline 500 transmitter Order number: 71346428
Protective cover Transmitter ▪ Proline 500 – digital ▪ Proline 500	Is used to protect the measuring device from the effects of the weather: e.g. rainwater, excess heating from direct sunlight. ▪ Proline 500 – digital transmitter Order number: 71343504 ▪ Proline 500 transmitter Order number: 71343505 Installation Instructions EA01191D
Display guard Proline 500 – digital	Is used to protect the display against impact or scoring from sand in desert areas. Order number: 71228792 Installation Instructions EA01093D
Ground cable	Set, consisting of two ground cables for potential equalization.

Connecting cable Proline 500 – digital Sensor – Transmitter	The connecting cable can be ordered directly with the measuring device (order code for "Cable, sensor connection) or as an accessory (order number DK5012). The following cable lengths are available: order code for "Cable, sensor connection" ▪ Option B: 20 m (65 ft) ▪ Option E: User configurable up to max. 50 m ▪ Option F: User configurable up to max. 165 ft Maximum possible cable length for a Proline 500 – digital connecting cable: 300 m (1 000 ft)
Connecting cable Proline 500 Sensor – Transmitter	The connecting cable can be ordered directly with the measuring device (order code for "Cable, sensor connection) or as an accessory (order number DK5012). The following cable lengths are available: order code for "Cable, sensor connection" ▪ Option 1: 5 m (16 ft) ▪ Option 2: 10 m (32 ft) ▪ Option 3: 20 m (65 ft) ▪ Option 4: User configurable cable length (m) ▪ Option 5: User configurable cable length (ft) Reinforced connecting cable with an additional, reinforcing metal braid: ▪ Option 6: User configurable cable length (m) ▪ Option 7: User configurable cable length (ft) Possible cable length for a Proline 500 connecting cable: depends on the medium conductivity, max. 200 m (660 ft)

For the sensor

Accessories	Description
Ground disks	Are used to ground the medium in lined measuring tubes to ensure proper measurement. For details, see Installation Instructions EA00070D

Communication-specific accessories

Accessories	Description
Commubox FXA195 HART	For intrinsically safe HART communication with FieldCare via the USB interface. Technical Information TI00404F
HART Loop Converter HMX50	Is used to evaluate and convert dynamic HART process variables to analog current signals or limit values. ▪ Technical Information TI00429F ▪ Operating Instructions BA00371F
Fieldgate FXA320	Gateway for the remote monitoring of connected 4-20 mA measuring devices via a Web browser. Technical Information TI00025S Operating Instructions BA00053S
Fieldgate FXA520	Gateway for the remote diagnostics and remote configuration of connected HART measuring devices via a Web browser. Technical Information TI00025S Operating Instructions BA00051S
Field Xpert SFX350	Field Xpert SFX350 is a mobile computer for commissioning and maintenance. It enables efficient device configuration and diagnostics for HART and FOUNDATION Fieldbus devices and can be used in non-hazardous areas. Operating Instructions BA01202S

Field Xpert SFX370	Field Xpert SFX370 is a mobile computer for commissioning and maintenance. It enables efficient device configuration and diagnostics for HART and FOUNDATION Fieldbus devices and can be used in the non-hazardous area and in the hazardous area. Operating Instructions BA01202S
Field Xpert SMT70	The Field Xpert SMT70 tablet PC for device configuration enables mobile plant asset management in hazardous and non-hazardous areas. It is suitable for commissioning and maintenance staff to manage field instruments with a digital communication interface and to record progress. This tablet PC is designed as an all-in-one solution with a preinstalled driver library and is an easy-to-use, touch-sensitive tool which can be used to manage field instruments throughout their entire life cycle. ▪ Technical Information TI01342S ▪ Operating Instructions BA01709S ▪ Product page: www.endress.com/smt70

Service-specific accessories

Accessories	Description
Applicator	Software for selecting and sizing Endress+Hauser measuring devices: ▪ Choice of measuring devices for industrial requirements ▪ Calculation of all the necessary data for identifying the optimum flowmeter: e.g. nominal diameter, pressure loss, flow velocity and accuracy. ▪ Graphic illustration of the calculation results ▪ Determination of the partial order code, administration, documentation and access to all project-related data and parameters over the entire life cycle of a project. Applicator is available: ▪ Via the Internet: https://portal.endress.com/webapp/applicator ▪ As a downloadable DVD for local PC installation.
W@M	W@M Life Cycle Management Improved productivity with information at your fingertips. Data relevant to a plant and its components is generated from the first stages of planning and during the asset's complete life cycle. W@M Life Cycle Management is an open and flexible information platform with online and on-site tools. Instant access for your staff to current, in-depth data shortens your plant's engineering time, speeds up procurement processes and increases plant uptime. Combined with the right services, W@M Life Cycle Management boosts productivity in every phase. For more information, visit www.endress.com/lifecyclemanagement
FieldCare	FDT-based plant asset management tool from Endress+Hauser. It can configure all smart field units in your system and helps you manage them. By using the status information, it is also a simple but effective way of checking their status and condition. Operating Instructions BA00027S and BA00059S
DeviceCare	Tool to connect and configure Endress+Hauser field devices. Innovation brochure IN01047S

System components

Accessories	Description
Memograph M graphic data manager	The Memograph M graphic data manager provides information on all the relevant measured variables. Measured values are recorded correctly, limit values are monitored and measuring points analyzed. The data are stored in the 256 MB internal memory and also on a SD card or USB stick. ▪ Technical Information TI00133R ▪ Operating Instructions BA00247R

Supplementary documentation

For an overview of the scope of the associated Technical Documentation, refer to the following:
- *W@M Device Viewer* (www.endress.com/deviceviewer): Enter the serial number from nameplate
- *Endress+Hauser Operations App*: Enter the serial number from the nameplate or scan the 2D matrix code (QR code) on the nameplate

Standard documentation

Brief Operating Instructions

Brief Operating Instructions for the sensor

Measuring device	Documentation code
Proline Promag P	KA01290D

Brief Operating Instructions for transmitter

Measuring device	Documentation code						
	HART	FOUNDATION Fieldbus	PROFIBUS PA	PROFIBUS DP	Modbus RS485	EtherNet/IP	PROFINET
Proline 500 – digital	KA01313D	KA01292D	KA01407D	KA01388D	KA01317D	KA01343D	KA01349D
Proline 500	KA01312D	KA01293D	KA01406D	KA01387D	KA01316D	KA01342D	KA01348D

Operating Instructions

Measuring device	Documentation code						
	HART	FOUNDATION Fieldbus	PROFIBUS PA	PROFIBUS DP	Modbus RS485	EtherNet/IP	PROFINET
Promag P 500	BA01399D	BA01480D	BA01405D	BA01867D	BA01402D	BA01721D	BA01724D

Description of Device Parameters

Measuring device	Documentation code						
	HART	FOUNDATION Fieldbus	PROFIBUS PA	PROFIBUS DP	Modbus RS485	EtherNet/IP	PROFINET
Promag 500	GP01054D	GP01099D	GP01056D	GP01136D	GP01055D	GP01118D	GP01119D

Device-dependent additional documentation

Safety instructions

Safety instructions for electrical equipment for hazardous areas.

Contents	Documentation code
ATEX/IECEx Ex i	XA01522D
ATEX/IECEx Ex ec	XA01523D
cCSAus IS	XA01524D
cCSAus Ex e ia/Ex d ia	XA01525D
cCSAus Ex nA	XA01526D
INMETRO Ex i	XA01527D
INMETRO Ex ec	XA01528D
NEPSI Ex i	XA01529D
NEPSI Ex nA	XA01530D
EAC Ex i	XA01658D

Contents	Documentation code
EAC Ex nA	XA01659D
JPN	XA01776D

Special Documentation

Contents	Documentation code
Information on the Pressure Equipment Directive	SD01614D
Functional Safety Manual	SD01741D
Radio approvals for WLAN interface for A309/A310 display module	SD01793D
OPC-UA Server [1)]	SD02044D

1) This Special Documentation is only available for device versions with a HART output.

Contents	Documentation code						
	HART	FOUNDATION Fieldbus	PROFIBUS PA	PROFIBUS DP	Modbus RS485	PROFINET	EtherNet/IP
Heartbeat Technology	SD01641D	SD01745D	SD01747D	SD02207D	SD01746D	SD01987D	SD01981D
Web server	SD01658D	SD01661D	SD01660D	SD02236D	SD01659D	SD01979D	SD01978D

Installation Instructions

Content	Comment
Installation instructions for spare part sets and accessories	Documentation code: specified for each individual accessory → 🖹 106.

Registered trademarks

HART®
Registered trademark of the FieldComm Group, Austin, Texas, USA

PROFIBUS®
Registered trademark of the PROFIBUS User Organization, Karlsruhe, Germany

FOUNDATION™ Fieldbus
Registration-pending trademark of the FieldComm Group, Austin, Texas, USA

Modbus®
Registered trademark of SCHNEIDER AUTOMATION, INC.

EtherNet/IP™
Trademark of ODVA, Inc.

PROFINET®
Registered trademark of the PROFIBUS User Organization, Karlsruhe, Germany

www.addresses.endress.com

Endress+Hauser

People for Process Automation

BA01399D/06/EN/05.20
71491356
2020-08-14

Valid as of version
01.05.zz (Device firmware)

Operating Instructions
Proline Promag P 500
HART

Electromagnetic flowmeter

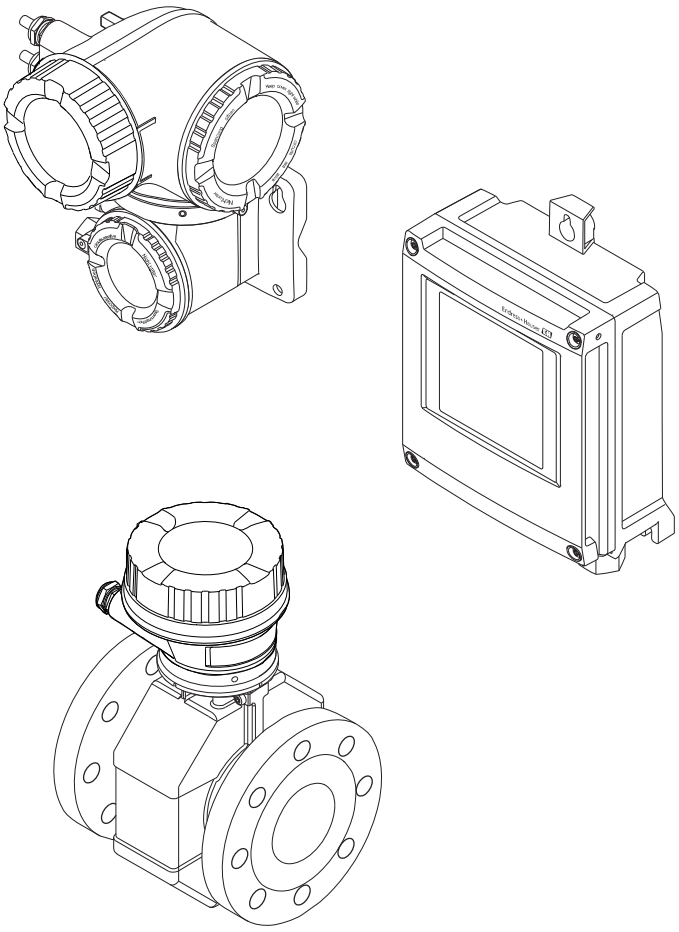

Endress+Hauser
People for Process Automation

- Make sure the document is stored in a safe place such that it is always available when working on or with the device.
- To avoid danger to individuals or the facility, read the "Basic safety instructions" section carefully, as well as all other safety instructions in the document that are specific to working procedures.
- The manufacturer reserves the right to modify technical data without prior notice. Your Endress+Hauser Sales Center will supply you with current information and updates to these instructions.

Table of contents

1 About this document 6
1.1 Document function 6
1.2 Symbols 6
1.2.1 Safety symbols 6
1.2.2 Electrical symbols 6
1.2.3 Communication symbols 6
1.2.4 Tool symbols 7
1.2.5 Symbols for certain types of information 7
1.2.6 Symbols in graphics 7
1.3 Documentation 8
1.3.1 Standard documentation 8
1.3.2 Supplementary device-dependent documentation 8
1.4 Registered trademarks 8

2 Safety instructions 9
2.1 Requirements for the personnel 9
2.2 Designated use 9
2.3 Workplace safety 10
2.4 Operational safety 10
2.5 Product safety 10
2.6 IT security 11
2.7 Device-specific IT security 11
2.7.1 Protecting access via hardware write protection 11
2.7.2 Protecting access via a password 11
2.7.3 Access via Web server 12
2.7.4 Access via OPC-UA 13
2.7.5 Access via service interface (CDI-RJ45) 13

3 Product description 14
3.1 Product design 14
3.1.1 Proline 500 – digital 14
3.1.2 Proline 500 15

4 Incoming acceptance and product identification 16
4.1 Incoming acceptance 16
4.2 Product identification 16
4.2.1 Transmitter nameplate 17
4.2.2 Sensor nameplate 19
4.2.3 Symbols on measuring device 20

5 Storage and transport 21
5.1 Storage conditions 21
5.2 Transporting the product 21
5.2.1 Measuring devices without lifting lugs 21
5.2.2 Measuring devices with lifting lugs . . 22
5.2.3 Transporting with a fork lift 22
5.3 Packaging disposal 22

6 Installation 23
6.1 Installation conditions 23
6.1.1 Mounting position 23
6.1.2 Environment and process requirements 25
6.1.3 Special mounting instructions 28
6.2 Mounting the measuring device 28
6.2.1 Required tools 28
6.2.2 Preparing the measuring device 29
6.2.3 Mounting the sensor 29
6.2.4 Mounting the transmitter housing: Proline 500 – digital 33
6.2.5 Mounting the transmitter housing: Proline 500 35
6.2.6 Turning the transmitter housing: Proline 500 36
6.2.7 Turning the display module: Proline 500 37
6.3 Post-installation check 37

7 Electrical connection 38
7.1 Connection conditions 38
7.1.1 Required tools 38
7.1.2 Requirements for connecting cable . . . 38
7.1.3 Terminal assignment 42
7.1.4 Preparing the measuring device 43
7.1.5 Preparing the connecting cable: Proline 500 – digital 44
7.1.6 Preparing the connecting cable: Proline 500 44
7.2 Connecting the measuring device: Proline 500 - digital 46
7.2.1 Connecting the connecting cable 46
7.2.2 Connecting the signal cable and the supply voltage cable 49
7.3 Connecting the measuring device: Proline 500 51
7.3.1 Connecting the connecting cable 51
7.3.2 Connecting the signal cable and the supply voltage cable 54
7.4 Ensuring potential equalization 56
7.4.1 Requirements 56
7.4.2 Connection example, standard scenario 56
7.4.3 Connection example in special situations 56
7.5 Special connection instructions 58
7.5.1 Connection examples 58
7.6 Ensuring the degree of protection 62
7.7 Post-connection check 63

8 Operation options 64
8.1 Overview of operation options 64
8.2 Structure and function of the operating menu 65
8.2.1 Structure of the operating menu 65
8.2.2 Operating philosophy 66
8.3 Access to the operating menu via the local display 67
8.3.1 Operational display 67
8.3.2 Navigation view 68
8.3.3 Editing view 70
8.3.4 Operating elements 72
8.3.5 Opening the context menu 72
8.3.6 Navigating and selecting from list . . . 74
8.3.7 Calling the parameter directly 74
8.3.8 Calling up help text 75
8.3.9 Changing the parameters 75
8.3.10 User roles and related access authorization 76
8.3.11 Disabling write protection via access code 76
8.3.12 Enabling and disabling the keypad lock 77
8.4 Access to the operating menu via the Web browser 77
8.4.1 Function range 77
8.4.2 Prerequisites 78
8.4.3 Establishing a connection 79
8.4.4 Logging on 81
8.4.5 User interface 82
8.4.6 Disabling the Web server 83
8.4.7 Logging out 83
8.5 Access to the operating menu via the operating tool 84
8.5.1 Connecting the operating tool 84
8.5.2 Field Xpert SFX350, SFX370 88
8.5.3 FieldCare 88
8.5.4 DeviceCare 89
8.5.5 AMS Device Manager 89
8.5.6 SIMATIC PDM 90
8.5.7 Field Communicator 475 90

9 System integration 91
9.1 Overview of device description files 91
9.1.1 Current version data for the device . . . 91
9.1.2 Operating tools 91
9.2 Measured variables via HART protocol 91
9.3 Other settings 93

10 Commissioning 95
10.1 Function check 95
10.2 Switching on the measuring device 95
10.3 Setting the operating language 95
10.4 Configuring the measuring device 95
10.4.1 Defining the tag name 97
10.4.2 Setting the system units 97
10.4.3 Displaying the I/O configuration 99
10.4.4 Configuring the status input 100
10.4.5 Configuring the current input 101
10.4.6 Configuring the current output 102
10.4.7 Configuring the pulse/frequency/switch output 105
10.4.8 Configuring the local display 111
10.4.9 Configuring the low flow cut off 113
10.4.10 Configuring empty pipe detection . . 114
10.4.11 Configuring the HART input 114
10.4.12 Configuring the relay output 116
10.4.13 Configuring the double pulse output 118
10.5 Advanced settings 120
10.5.1 Using the parameter to enter the access code 121
10.5.2 Carrying out a sensor adjustment . . . 121
10.5.3 Configuring the totalizer 121
10.5.4 Carrying out additional display configurations 123
10.5.5 Performing electrode cleaning 126
10.5.6 WLAN configuration 127
10.5.7 Configuration management 128
10.5.8 Using parameters for device administration 130
10.6 Simulation 131
10.7 Protecting settings from unauthorized access 134
10.7.1 Write protection via access code . . . 134
10.7.2 Write protection via write protection switch 135

11 Operation 138
11.1 Reading the device locking status 138
11.2 Adjusting the operating language 138
11.3 Configuring the display 138
11.4 Reading measured values 138
11.4.1 "Process variables" submenu 138
11.4.2 "Totalizer" submenu 139
11.4.3 "Input values" submenu 140
11.4.4 Output values 141
11.5 Adapting the measuring device to the process conditions 143
11.6 Performing a totalizer reset 143
11.6.1 Function scope of the "Control Totalizer" parameter 144
11.6.2 Function scope of the "Reset all totalizers" parameter 144
11.7 Showing data logging 144

12 Diagnostics and troubleshooting . . 148
12.1 General troubleshooting 148
12.2 Diagnostic information via light emitting diodes 150
12.2.1 Transmitter 150
12.2.2 Sensor connection housing 152
12.3 Diagnostic information on local display 154
12.3.1 Diagnostic message 154
12.3.2 Calling up remedial measures 156

12.4 Diagnostic information in the Web browser . 156
12.4.1 Diagnostic options 156
12.4.2 Calling up remedy information 157
12.5 Diagnostic information in FieldCare or DeviceCare 158
12.5.1 Diagnostic options 158
12.5.2 Calling up remedy information 159
12.6 Adapting the diagnostic information 159
12.6.1 Adapting the diagnostic behavior . . . 159
12.6.2 Adapting the status signal 159
12.7 Overview of diagnostic information 160
12.8 Pending diagnostic events 164
12.9 Diagnostic list 165
12.10 Event logbook 165
12.10.1 Reading out the event logbook 165
12.10.2 Filtering the event logbook 166
12.10.3 Overview of information events 166
12.11 Resetting the measuring device 168
12.11.1 Function scope of the "Device reset" parameter 168
12.12 Device information 168
12.13 Firmware history 171
12.14 Device history and compatibility 172

13 Maintenance 173
13.1 Maintenance tasks 173
13.1.1 Exterior cleaning 173
13.1.2 Interior cleaning 173
13.1.3 Replacing seals 173
13.2 Measuring and test equipment 173
13.3 Endress+Hauser services 173

14 Repair 174
14.1 General notes 174
14.1.1 Repair and conversion concept 174
14.1.2 Notes for repair and conversion 174
14.2 Spare parts 174
14.3 Endress+Hauser services 174
14.4 Return 174
14.5 Disposal 174
14.5.1 Removing the measuring device 174
14.5.2 Disposing of the measuring device . . 175

15 Accessories 176
15.1 Device-specific accessories 176
15.1.1 For the transmitter 176
15.1.2 For the sensor 177
15.2 Communication-specific accessories 177
15.3 Service-specific accessories 178
15.4 System components 179

16 Technical data 180
16.1 Application 180
16.2 Function and system design 180
16.3 Input 180
16.4 Output 184
16.5 Power supply 190
16.6 Performance characteristics 191
16.7 Installation 192
16.8 Environment 192
16.9 Process 193
16.10 Mechanical construction 196
16.11 Human interface 201
16.12 Certificates and approvals 204
16.13 Application packages 206
16.14 Accessories 207
16.15 Supplementary documentation 207

Index 210

1 About this document

1.1 Document function

These Operating Instructions contain all the information that is required in various phases of the life cycle of the device: from product identification, incoming acceptance and storage, to mounting, connection, operation and commissioning through to troubleshooting, maintenance and disposal.

1.2 Symbols

1.2.1 Safety symbols

⚠ DANGER
This symbol alerts you to a dangerous situation. Failure to avoid this situation will result in serious or fatal injury.

⚠ WARNING
This symbol alerts you to a dangerous situation. Failure to avoid this situation can result in serious or fatal injury.

⚠ CAUTION
This symbol alerts you to a dangerous situation. Failure to avoid this situation can result in minor or medium injury.

NOTICE
This symbol contains information on procedures and other facts which do not result in personal injury.

1.2.2 Electrical symbols

Symbol	Meaning
⎓	Direct current
~	Alternating current
⎓ ~	Direct current and alternating current
⏚	**Ground connection** A grounded terminal which, as far as the operator is concerned, is grounded via a grounding system.
⊕	**Protective Earth (PE)** A terminal which must be connected to ground prior to establishing any other connections. The ground terminals are situated inside and outside the device: ▪ Inner ground terminal: Connects the protectiv earth to the mains supply. ▪ Outer ground terminal: Connects the device to the plant grounding system.

1.2.3 Communication symbols

Symbol	Meaning
	Wireless Local Area Network (WLAN) Communication via a wireless, local network.
	LED Light emitting diode is off.

Symbol	Meaning
	**LED** Light emitting diode is on.
	**LED** Light emitting diode is flashing.

1.2.4 Tool symbols

Symbol	Meaning
	Torx screwdriver
	Phillips head screwdriver
	Open-ended wrench

1.2.5 Symbols for certain types of information

Symbol	Meaning
	**Permitted** Procedures, processes or actions that are permitted.
	**Preferred** Procedures, processes or actions that are preferred.
	**Forbidden** Procedures, processes or actions that are forbidden.
	**Tip** Indicates additional information.
	Reference to documentation.
	Reference to page.
	Reference to graphic.
	Notice or individual step to be observed.
1., 2., 3...	Series of steps.
	Result of a step.
	Help in the event of a problem.
	Visual inspection.

1.2.6 Symbols in graphics

Symbol	Meaning
1, 2, 3, ...	Item numbers
1., 2., 3., ...	Series of steps
A, B, C, ...	Views
A-A, B-B, C-C, ...	Sections
	Hazardous area

Symbol	Meaning
	Safe area (non-hazardous area)
	Flow direction

1.3 Documentation

For an overview of the scope of the associated Technical Documentation, refer to the following:
- *W@M Device Viewer* (www.endress.com/deviceviewer): Enter the serial number from nameplate
- *Endress+Hauser Operations App*: Enter the serial number from the nameplate or scan the 2D matrix code (QR code) on the nameplate

Detailed list of the individual documents along with the documentation code
→ 207

1.3.1 Standard documentation

Document type	Purpose and content of the document
Technical Information	**Planning aid for your device** The document contains all the technical data on the device and provides an overview of the accessories and other products that can be ordered for the device.
Sensor Brief Operating Instructions	**Guides you quickly to the 1st measured value - Part 1** The Sensor Brief Operating Instructions are aimed at specialists with responsibility for installing the measuring device. ▪ Incoming acceptance and product identification ▪ Storage and transport ▪ Installation
Transmitter Brief Operating Instructions	**Guides you quickly to the 1st measured value - Part 2** The Transmitter Brief Operating Instructions are aimed at specialists with responsibility for commissioning, configuring and parameterizing the measuring device (until the first measured value). ▪ Product description ▪ Installation ▪ Electrical connection ▪ Operation options ▪ System integration ▪ Commissioning ▪ Diagnostic information
Description of Device Parameters	**Reference for your parameters** The document provides a detailed explanation of each individual parameter in the Expert operating menu. The description is aimed at those who work with the device over the entire life cycle and perform specific configurations.

1.3.2 Supplementary device-dependent documentation

Additional documents are supplied depending on the device version ordered: Always comply strictly with the instructions in the supplementary documentation. The supplementary documentation is an integral part of the device documentation.

1.4 Registered trademarks

HART®
Registered trademark of the FieldComm Group, Austin, Texas, USA

2 Safety instructions

2.1 Requirements for the personnel

The personnel for installation, commissioning, diagnostics and maintenance must fulfill the following requirements:
- Trained, qualified specialists must have a relevant qualification for this specific function and task.
- Are authorized by the plant owner/operator.
- Are familiar with federal/national regulations.
- Before starting work, read and understand the instructions in the manual and supplementary documentation as well as the certificates (depending on the application).
- Follow instructions and comply with basic conditions.

The operating personnel must fulfill the following requirements:
- Are instructed and authorized according to the requirements of the task by the facility's owner-operator.
- Follow the instructions in this manual.

2.2 Designated use

Application and media
The measuring device described in these Brief Operating Instructions is intended only for flow measurement of liquids with a minimum conductivity of 5 µS/cm.

Depending on the version ordered, the measuring device can also measure potentially explosive, flammable, poisonous and oxidizing media.

Measuring devices for use in hazardous areas, in hygienic applications or where there is an increased risk due to process pressure, are labeled accordingly on the nameplate.

To ensure that the measuring device remains in proper condition for the operation time:
- Keep within the specified pressure and temperature range.
- Only use the measuring device in full compliance with the data on the nameplate and the general conditions listed in the Operating Instructions and supplementary documentation.
- Based on the nameplate, check whether the ordered device is permitted for the intended use in the hazardous area (e.g. explosion protection, pressure vessel safety).
- Use the measuring device only for media to which the process-wetted materials are sufficiently resistant.
- If the ambient temperature of the measuring device is outside the atmospheric temperature, it is absolutely essential to comply with the relevant basic conditions as specified in the device documentation. → 8
- Protect the measuring device permanently against corrosion from environmental influences.

Incorrect use
Non-designated use can compromise safety. The manufacturer is not liable for damage caused by improper or non-designated use.

⚠ WARNING

Danger of breakage due to corrosive or abrasive fluids and ambient conditions!
- Verify the compatibility of the process fluid with the sensor material.
- Ensure the resistance of all fluid-wetted materials in the process.
- Keep within the specified pressure and temperature range.

NOTICE

Verification for borderline cases:

- For special fluids and fluids for cleaning, Endress+Hauser is glad to provide assistance in verifying the corrosion resistance of fluid-wetted materials, but does not accept any warranty or liability as minute changes in the temperature, concentration or level of contamination in the process can alter the corrosion resistance properties.

Residual risks

WARNING

The electronics and the medium may cause the surfaces to heat up. This presents a burn hazard!

- For elevated fluid temperatures, ensure protection against contact to prevent burns.

2.3 Workplace safety

For work on and with the device:

- Wear the required personal protective equipment according to federal/national regulations.

For welding work on the piping:

- Do not ground the welding unit via the measuring device.

If working on and with the device with wet hands:

- Due to the increased risk of electric shock, gloves must be worn.

2.4 Operational safety

Risk of injury.

- Operate the device in proper technical condition and fail-safe condition only.
- The operator is responsible for interference-free operation of the device.

Conversions to the device

Unauthorized modifications to the device are not permitted and can lead to unforeseeable dangers.

- If, despite this, modifications are required, consult with Endress+Hauser.

Repair

To ensure continued operational safety and reliability,

- Carry out repairs on the device only if they are expressly permitted.
- Observe federal/national regulations pertaining to repair of an electrical device.
- Use original spare parts and accessories from Endress+Hauser only.

2.5 Product safety

This measuring device is designed in accordance with good engineering practice to meet state-of-the-art safety requirements, has been tested, and left the factory in a condition in which it is safe to operate.

It meets general safety standards and legal requirements. It also complies with the EU directives listed in the device-specific EU Declaration of Conformity. Endress+Hauser confirms this by affixing the CE mark to the device.

2.6 IT security

Our warranty is valid only if the device is installed and used as described in the Operating Instructions. The device is equipped with security mechanisms to protect it against any inadvertent changes to the settings.

IT security measures, which provide additional protection for the device and associated data transfer, must be implemented by the operators themselves in line with their security standards.

2.7 Device-specific IT security

The device offers a range of specific functions to support protective measures on the operator's side. These functions can be configured by the user and guarantee greater in-operation safety if used correctly. An overview of the most important functions is provided in the following section.

Function/interface	Factory setting	Recommendation
Write protection via hardware write protection switch → 🖹 11	Not enabled.	On an individual basis following risk assessment.
Access code (also applies for Web server login or FieldCare connection) → 🖹 12	Not enabled (0000).	Assign a customized access code during commissioning.
WLAN (order option in display module)	Enabled.	On an individual basis following risk assessment.
WLAN security mode	Enabled (WPA2-PSK)	Do not change.
WLAN passphrase (password) → 🖹 12	Serial number	Assign an individual WLAN passphrase during commissioning.
WLAN mode	Access Point	On an individual basis following risk assessment.
Web server→ 🖹 12	Enabled.	On an individual basis following risk assessment.
CDI-RJ45 service interface → 🖹 13	–	On an individual basis following risk assessment.

2.7.1 Protecting access via hardware write protection

Write access to the device parameters via the local display, Web browser or operating tool (e.g. FieldCare, DeviceCare) can be disabled via a write protection switch (DIP switch on the motherboard). When hardware write protection is enabled, only read access to the parameters is possible.

Hardware write protection is disabled when the device is delivered → 🖹 135.

2.7.2 Protecting access via a password

Different passwords are available to protect write access to the device parameters or access to the device via the WLAN interface.

- User-specific access code
  Protect write access to the device parameters via the local display, Web browser or operating tool (e.g. FieldCare, DeviceCare). Access authorization is clearly regulated through the use of a user-specific access code.
- WLAN passphrase
  The network key protects a connection between an operating unit (e.g. notebook or tablet) and the device via the WLAN interface which can be ordered as an option.
- Infrastructure mode
  When the device is operated in infrastructure mode, the WLAN passphrase corresponds to the WLAN passphrase configured on the operator side.

User-specific access code

Write access to the device parameters via the local display, Web browser or operating tool (e.g. FieldCare, DeviceCare) can be protected by the modifiable, user-specific access code (→ 🖹 134).

When the device is delivered, the device does not have an access code and is equivalent to *0000* (open).

WLAN passphrase: Operation as WLAN access point

A connection between an operating unit (e.g. notebook or tablet) and the device via the WLAN interface (→ 🖹 86), which can be ordered as an optional extra, is protected by the network key. The WLAN authentication of the network key complies with the IEEE 802.11 standard.

When the device is delivered, the network key is pre-defined depending on the device. It can be changed via the **WLAN settings** submenu in the **WLAN passphrase** parameter (→ 🖹 128).

Infrastructure mode

A connection between the device and WLAN access point is protected by means of an SSID and passphrase on the system side. Please contact the relevant system administrator for access.

General notes on the use of passwords

- The access code and network key supplied with the device should be changed during commissioning.
- Follow the general rules for generating a secure password when defining and managing the access code or network key.
- The user is responsible for the management and careful handling of the access code and network key.
- For information on configuring the access code or on what to do if you lose the password, see the "Write protection via access code" section → 🖹 134

2.7.3 Access via Web server

The device can be operated and configured via a Web browser with the integrated Web server (→ 🖹 77). The connection is via the service interface (CDI-RJ45) or the WLAN interface.

The Web server is enabled when the device is delivered. The Web server can be disabled if necessary (e.g. after commissioning) via the **Web server functionality** parameter.

The device and status information can be hidden on the login page. This prevents unauthorized access to the information.

For detailed information on device parameters, see:
The "Description of Device Parameters" document → 🖹 208.

2.7.4 Access via OPC-UA

The device can communicate with OPC UA clients using the "OPC UA Server" application package.

The OPC UA server integrated in the device can be accessed via the WLAN access point using the WLAN interface - which can be ordered as an optional extra - or the service interface (CDI- RJ45) via Ethernet network. Access rights and authorization as per separate configuration.

The following Security Modes are supported as per the OPC UA Specification (IEC 62541):
- None
- Basic128Rsa15 – signed
- Basic128Rsa15 – signed and encrypted

2.7.5 Access via service interface (CDI-RJ45)

The device can be connected to a network via the service interface (CDI-RJ45). Device-specific functions guarantee the secure operation of the device in a network.

The use of relevant industrial standards and guidelines that have been defined by national and international safety committees, such as IEC/ISA62443 or the IEEE, is recommended. This includes organizational security measures such as the assignment of access authorization as well as technical measures such as network segmentation.

Transmitters with an Ex de approval may not be connected via the service interface (CDI-RJ45)!

Order code for "Approval transmitter + sensor", options (Ex de): BA, BB, C1, C2, GA, GB, MA, MB, NA, NB

3 Product description

The measuring system consists of a transmitter and a sensor. The transmitter and sensor are mounted in physically separate locations. They are interconnected by connecting cables.

3.1 Product design

Two versions of the transmitter are available.

3.1.1 Proline 500 – digital

Signal transmission: digital
Order code for "Integrated ISEM electronics", option **A** "Sensor"

For use in applications not required to meet special requirements due to ambient or operating conditions.

As the electronics are located in the sensor, the device is ideal:
For simple transmitter replacement.

- A standard cable can be used as the connecting cable.
- Not sensitive to external EMC interference.

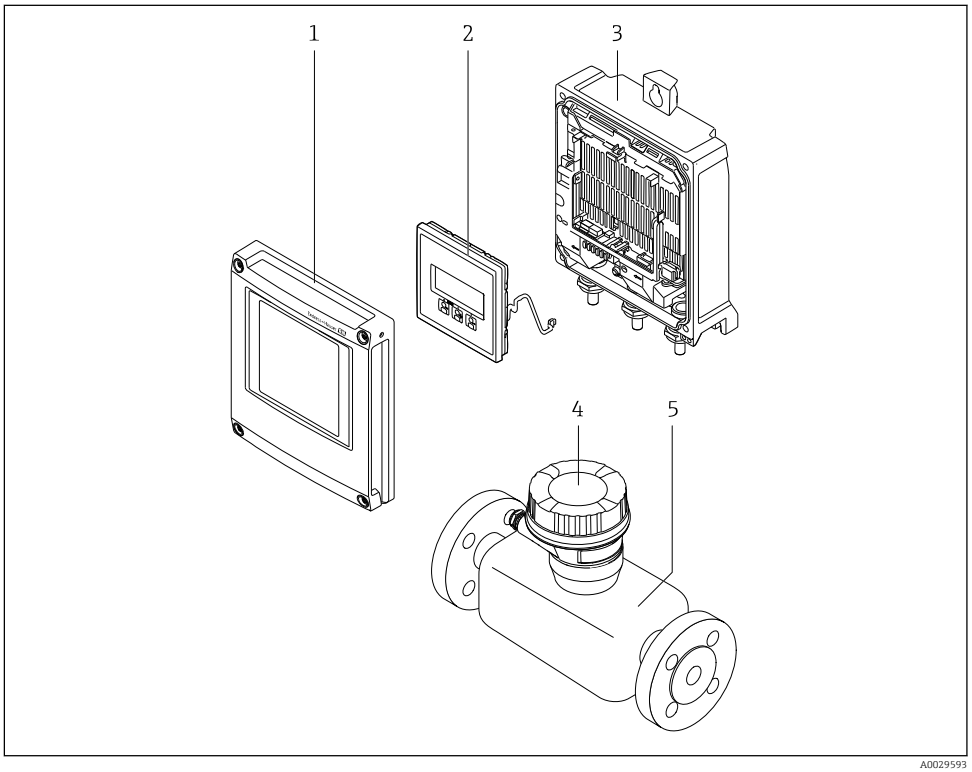

1 Important components of a measuring device

1 Electronics compartment cover
2 Display module
3 Transmitter housing
4 Sensor connection housing with integrated ISEM electronics: connecting cable connection
5 Sensor

3.1.2 Proline 500

Signal transmission: analog
Order code for "Integrated ISEM electronics", option **B** "Transmitter"

For use in applications required to meet special requirements due to ambient or operating conditions.

As the electronics are located in the transmitter, the device is ideal in the event of:
- Sensor operation in underground installations.
- Permanent sensor immersion in water.

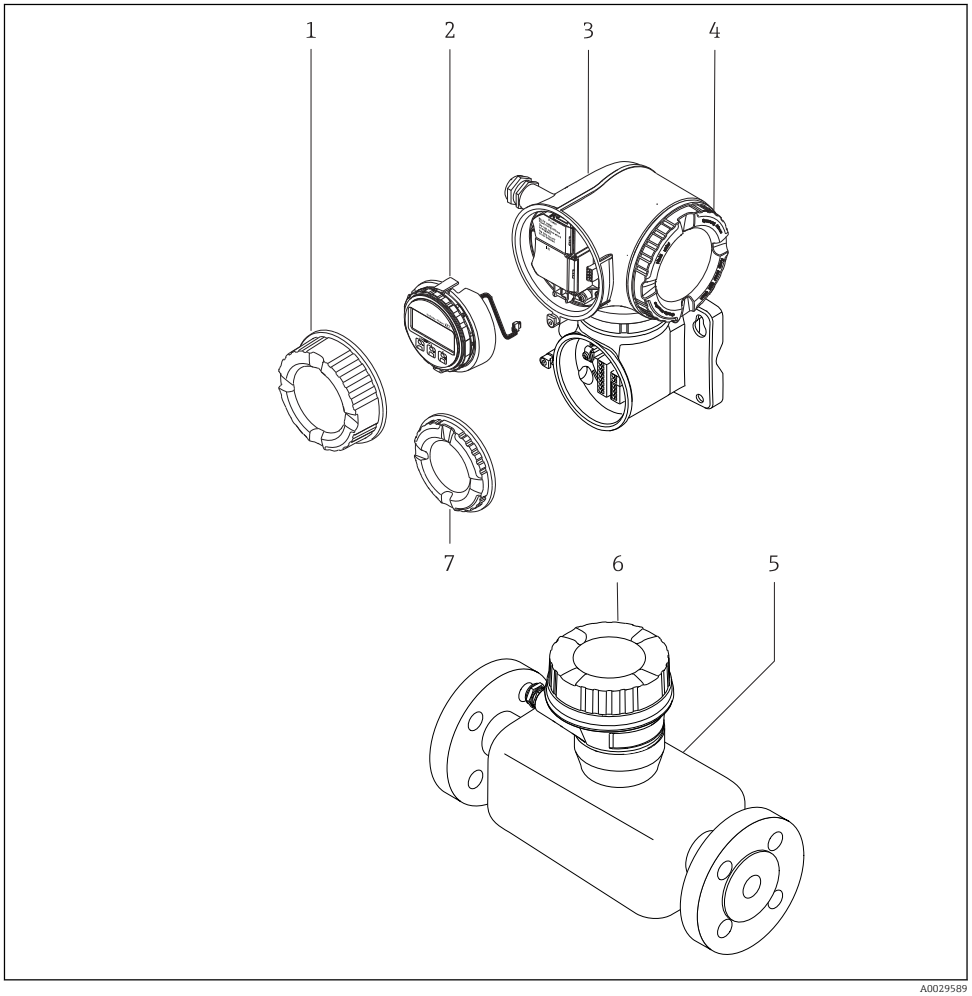

2 Important components of a measuring device

1 Connection compartment cover
2 Display module
3 Transmitter housing with integrated ISEM electronics
4 Electronics compartment cover
5 Sensor
6 Sensor connection housing: connecting cable connection
7 Connection compartment cover: connecting cable connection

4 Incoming acceptance and product identification

4.1 Incoming acceptance

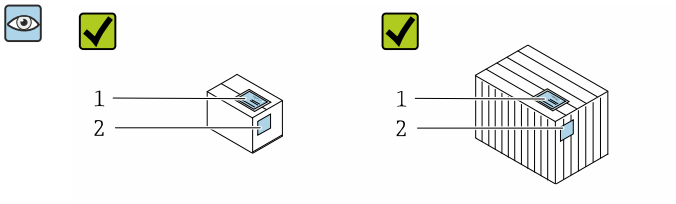

Are the order codes on the delivery note (1) and the product sticker (2) identical?

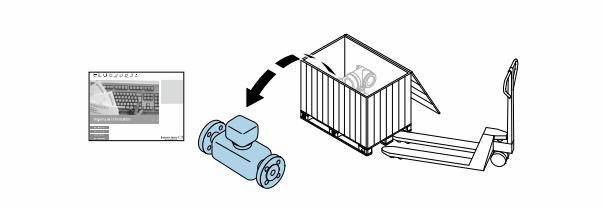



Are the goods undamaged?

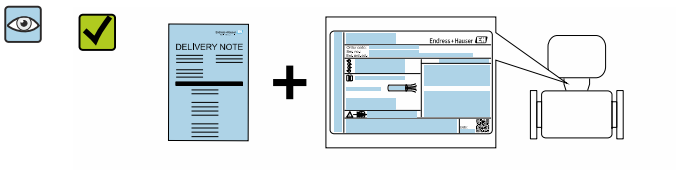

Do the nameplate data match the ordering information on the delivery note?

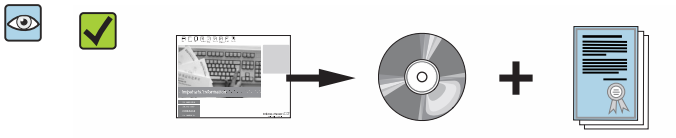

Is the document folder present with accompanying documents?
Is the optional CD-ROM with the Technical Documentation present?

- If one of the conditions is not satisfied, contact your Endress+Hauser Sales Center.
- Depending on the device version, the CD-ROM might not be part of the delivery! The Technical Documentation is available via the Internet or via the *Endress+Hauser Operations App*, see the "Product identification" section → 17.

4.2 Product identification

The following options are available for identification of the device:
- Nameplate specifications
- Order code with breakdown of the device features on the delivery note
- Enter serial numbers from nameplates in the *W@M Device Viewer* (www.endress.com/deviceviewer): All information about the device is displayed.
- Enter the serial number from nameplates in the *Endress+Hauser Operations App* or scan the 2-D matrix code (QR code) on the nameplate using the *Endress+Hauser Operations App*: All information about the device is displayed.

For an overview of the scope of the associated Technical Documentation, refer to the following:
- The "Additional standard documentation on the device"→ 📄 8 and "Supplementary device-dependent documentation"→ 📄 8 sections
- The *W@M Device Viewer*: enter the serial number from the nameplate (www.endress.com/deviceviewer)
- The *Endress+Hauser Operations App*: Enter the serial number from the nameplate or scan the 2-D matrix code (QR code) on the nameplate.

4.2.1 Transmitter nameplate

Proline 500 – digital

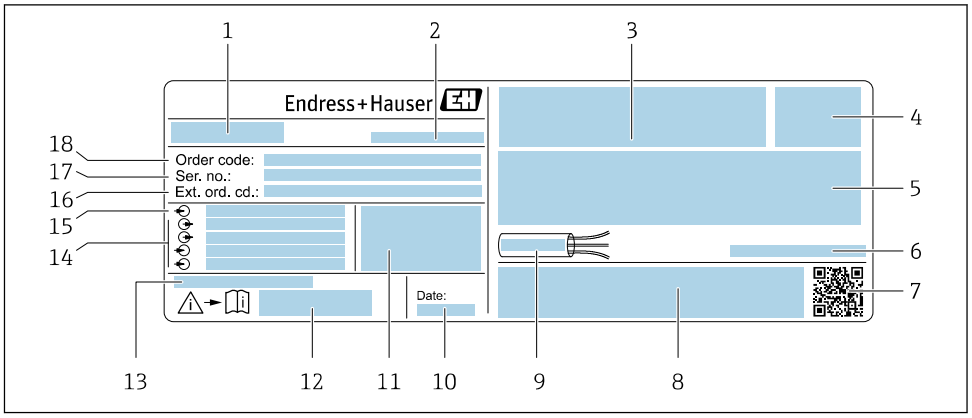

3 *Example of a transmitter nameplate*

1 *Name of the transmitter*
2 *Manufacturing location*
3 *Space for approvals: use in hazardous areas*
4 *Degree of protection*
5 *Electrical connection data: available inputs and outputs*
6 *Permitted ambient temperature (T_a)*
7 *2-D matrix code*
8 *Space for approvals and certificates: e.g. CE mark, C-Tick*
9 *Permitted temperature range for cable*
10 *Manufacturing date: year-month*
11 *Firmware version (FW) and device revision (Dev.Rev.) from the factory*
12 *Document number of safety-related supplementary documentation*
13 *Space for additional information in the case of special products*
14 *Available inputs and outputs, supply voltage*
15 *Electrical connection data: supply voltage*
16 *Extended order code (ext. ord. cd.)*
17 *Serial number (ser. no.)*
18 *Order code*

Proline 500

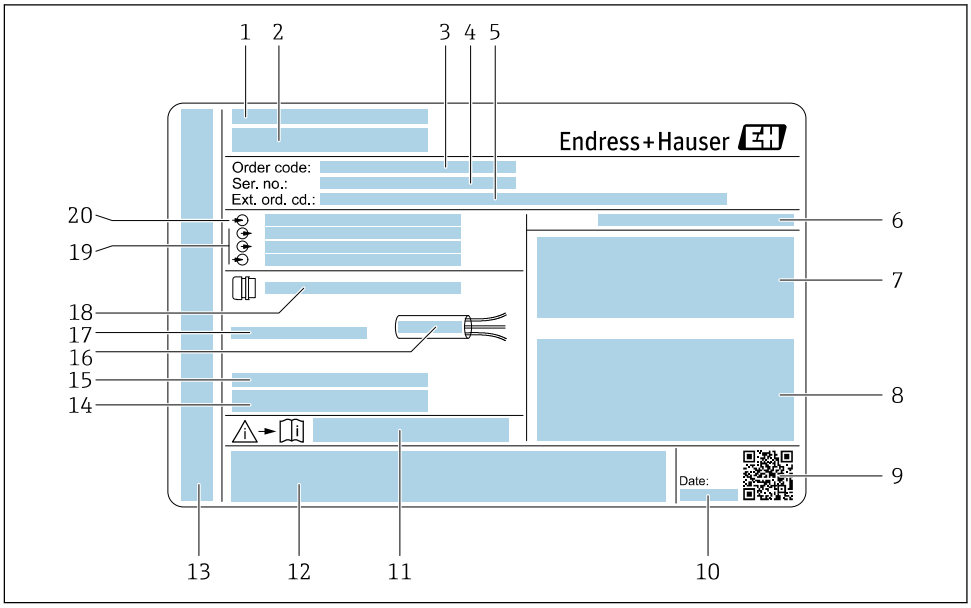

4 *Example of a transmitter nameplate*

1 *Manufacturing location*
2 *Name of the transmitter*
3 *Order code*
4 *Serial number (ser. no.)*
5 *Extended order code (ext. ord. cd.)*
6 *Degree of protection*
7 *Space for approvals: use in hazardous areas*
8 *Electrical connection data: available inputs and outputs*
9 *2-D matrix code*
10 *Manufacturing date: year-month*
11 *Document number of safety-related supplementary documentation*
12 *Space for approvals and certificates: e.g. CE mark, C-Tick*
13 *Space for degree of protection of connection and electronics compartment when used in hazardous areas*
14 *Firmware version (FW) and device revision (Dev.Rev.) from the factory*
15 *Space for additional information in the case of special products*
16 *Permitted temperature range for cable*
17 *Permitted ambient temperature (T_a)*
18 *Information on cable gland*
19 *Available inputs and outputs, supply voltage*
20 *Electrical connection data: supply voltage*

4.2.2 Sensor nameplate

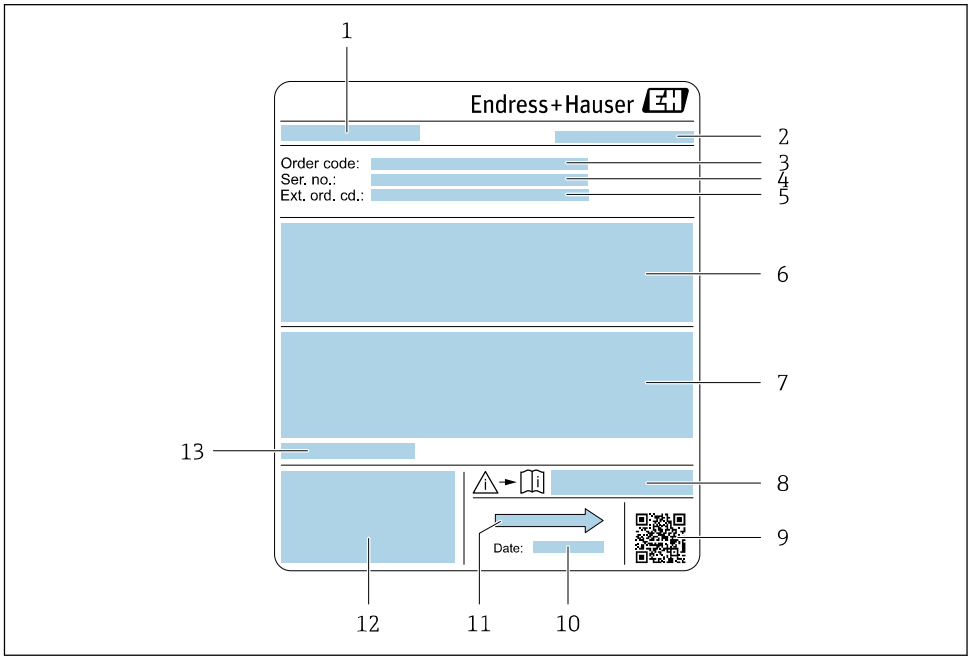

5 *Example of sensor nameplate*

1 *Name of the sensor*
2 *Manufacturing location*
3 *Order code*
4 *Serial number (ser. no.)*
5 *Extended order code (Ext. ord. cd.)*
6 *Flow; nominal diameter of the sensor; pressure rating; nominal pressure; system pressure; fluid temperature range; material of liner and electrodes*
7 *Approval information for explosion protection, Pressure Equipment Directive and degree of protection*
8 *Document number of safety-related supplementary documentation*
9 *2-D matrix code*
10 *Manufacturing date: year-month*
11 *Flow direction*
12 *CE mark, C-Tick*
13 *Permitted ambient temperature (T_a)*

Order code

The measuring device is reordered using the order code.

Extended order code

- The device type (product root) and basic specifications (mandatory features) are always listed.
- Of the optional specifications (optional features), only the safety and approval-related specifications are listed (e.g. LA). If other optional specifications are also ordered, these are indicated collectively using the # placeholder symbol (e.g. #LA#).
- If the ordered optional specifications do not include any safety and approval-related specifications, they are indicated by the + placeholder symbol (e.g. XXXXXX-ABCDE +).

4.2.3 Symbols on measuring device

Symbol	Meaning
	**WARNING!** This symbol alerts you to a dangerous situation. Failure to avoid this situation can result in serious or fatal injury.
	**Reference to documentation** Refers to the corresponding device documentation.
	**Protective ground connection** A terminal which must be connected to ground prior to establishing any other connections.

5 Storage and transport

5.1 Storage conditions

Observe the following notes for storage:
- Store in the original packaging to ensure protection from shock.
- Do not remove protective covers or protective caps installed on process connections. They prevent mechanical damage to the sealing surfaces and contamination in the measuring tube.
- Protect from direct sunlight to avoid unacceptably high surface temperatures.
- Select a storage location where moisture cannot collect in the measuring device as fungus and bacteria infestation can damage the lining.
- Store in a dry and dust-free place.
- Do not store outdoors.

Storage temperature→ 192

5.2 Transporting the product

Transport the measuring device to the measuring point in the original packaging.

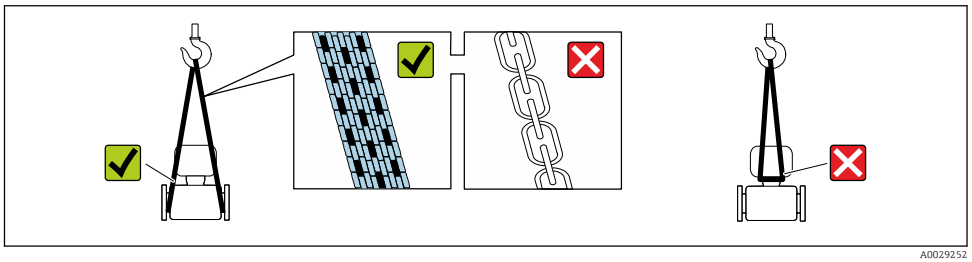

A0029252

Do not remove protective covers or caps installed on process connections. They prevent mechanical damage to the sealing surfaces and contamination in the measuring tube.

5.2.1 Measuring devices without lifting lugs

WARNING

Center of gravity of the measuring device is higher than the suspension points of the webbing slings.

Risk of injury if the measuring device slips.
- Secure the measuring device against slipping or turning.
- Observe the weight specified on the packaging (stick-on label).

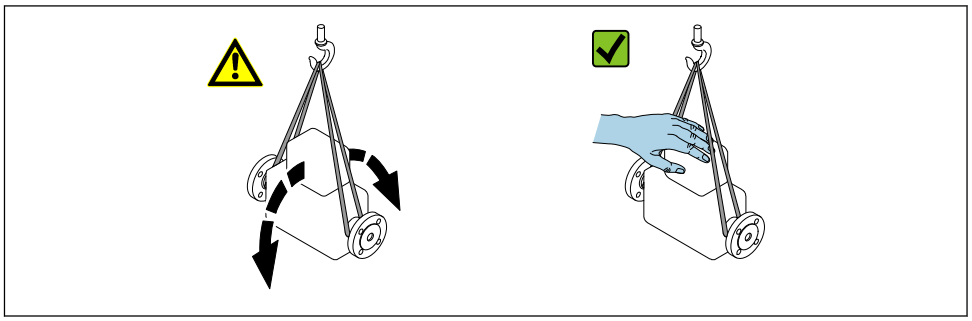

A0029214

5.2.2 Measuring devices with lifting lugs

⚠ CAUTION

Special transportation instructions for devices with lifting lugs

- ▶ Only use the lifting lugs fitted on the device or flanges to transport the device.
- ▶ The device must always be secured at two lifting lugs at least.

5.2.3 Transporting with a fork lift

If transporting in wood crates, the floor structure enables the crates to be lifted lengthwise or at both sides using a forklift.

⚠ CAUTION

Risk of damaging the magnetic coil

- ▶ If transporting by forklift, do not lift the sensor by the metal casing.
- ▶ This would buckle the casing and damage the internal magnetic coils.

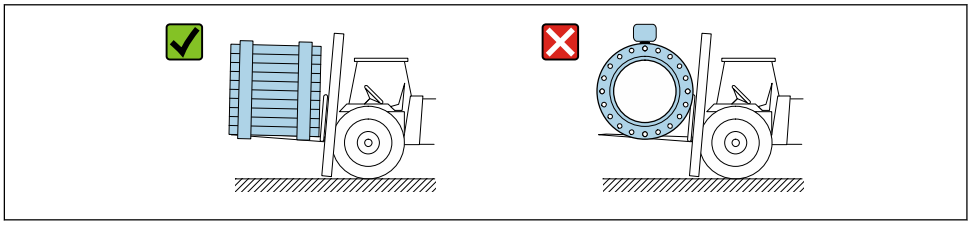

A0029319

5.3 Packaging disposal

All packaging materials are environmentally friendly and 100 % recyclable:

- Outer packaging of device
  Polymer stretch wrap that complies with EU Directive 2002/95/EC (RoHS)
- Packaging
  - Wooden crate treated in accordance with ISPM 15 standard, confirmed by IPPC logo
  - Cardboard box in accordance with European packaging guideline 94/62EC, recyclability confirmed by Resy symbol
- Carrying and securing materials
  - Disposable plastic pallet
  - Plastic straps
  - Plastic adhesive strips
- Filler material
  Paper pads

6 Installation

6.1 Installation conditions

6.1.1 Mounting position

Mounting location

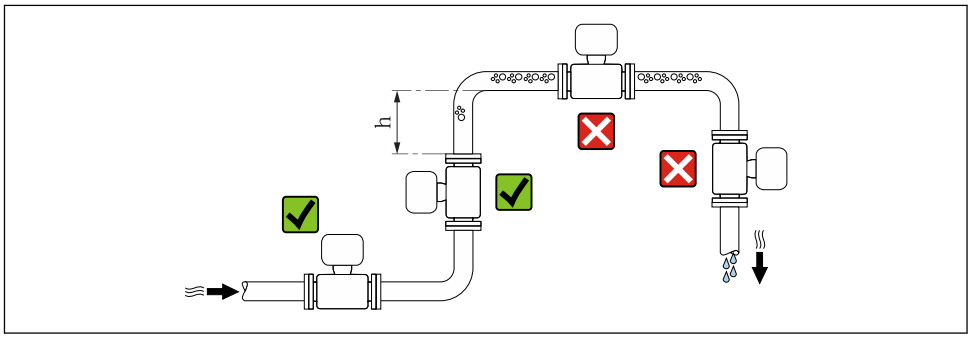

Preferably install the sensor in an ascending pipe, and ensure a sufficient distance to the next pipe elbow: h ≥ 2 × DN.

Installation in down pipes

Install a siphon with a vent valve downstream of the sensor in down pipes whose length h ≥ 5 m (16.4 ft). This precaution is to avoid low pressure and the consequent risk of damage to the measuring tube. This measure also prevents the system losing prime.

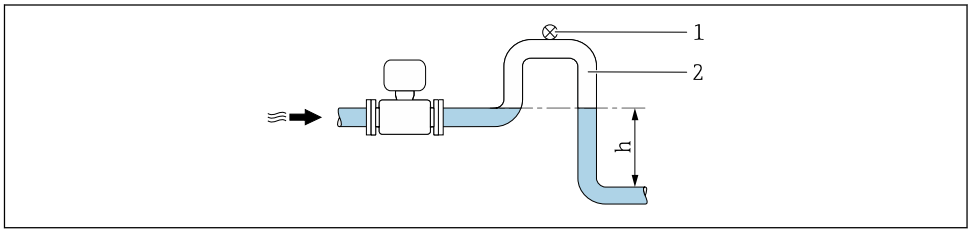

6 *Installation in a down pipe*

1 *Vent valve*
2 *Pipe siphon*
h *Length of down pipe*

Installation in partially filled pipes

A partially filled pipe with a gradient necessitates a drain-type configuration.

No inlet runs necessary with order code for "Design", option C, H, I

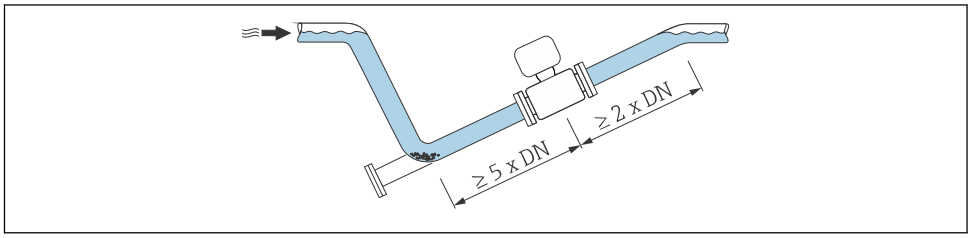

For heavy sensors DN ≥ 350 (14")

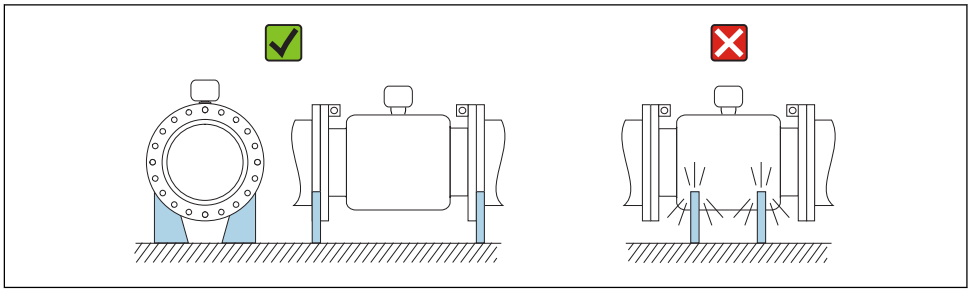

A0016276

Orientation

The direction of the arrow on the sensor nameplate helps you to install the sensor according to the flow direction (direction of medium flow through the piping).

Orientation			Recommendation
A	Vertical orientation	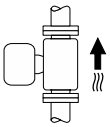 A0015591	✓✓
B	Horizontal orientation, transmitter at top	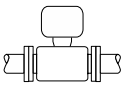 A0015589	✓✓ 1)
C	Horizontal orientation, transmitter at bottom	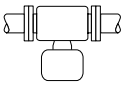 A0015590	✓✓ 2) 3) ✗ 4)
D	Horizontal orientation, transmitter at side	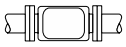 A0015592	✗

1) Applications with low process temperatures may decrease the ambient temperature. To maintain the minimum ambient temperature for the transmitter, this orientation is recommended.
2) Applications with high process temperatures may increase the ambient temperature. To maintain the maximum ambient temperature for the transmitter, this orientation is recommended.
3) To prevent the electronics module from overheating in the case of a sharp rise in temperature (e.g. CIP or SIP processes), install the device with the transmitter component pointing downwards.
4) With the empty pipe detection function switched on: empty pipe detection only works if the transmitter housing is pointing upwards.

Horizontal

- Ideally, the measuring electrode plane should be horizontal. This prevents brief insulation of the measuring electrodes by entrained air bubbles.
- Empty pipe detection only works if the transmitter housing is pointing upwards as otherwise there is no guarantee that the empty pipe detection function will actually respond to a partially filled or empty measuring tube.

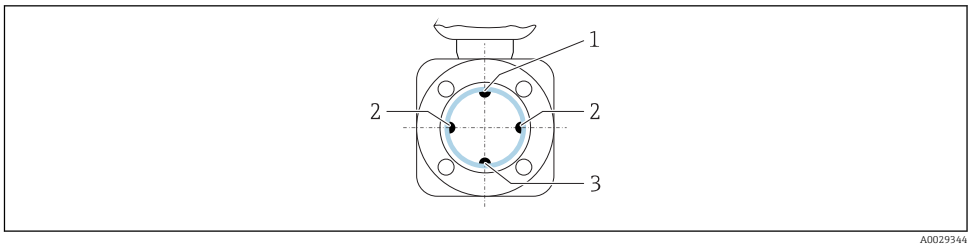

1 *EPD electrode for empty pipe detection*
2 *Measuring electrodes for signal detection*
3 *Reference electrode for potential equalization*

Measuring devices with tantalum or platinum electrodes can be ordered without an EPD electrode. In this case, empty pipe detection is performed via the measuring electrodes.

Inlet and outlet runs

If possible, install the sensor upstream from fittings such as valves, T-pieces or elbows.

Observe the following inlet and outlet runs to comply with accuracy specifications:

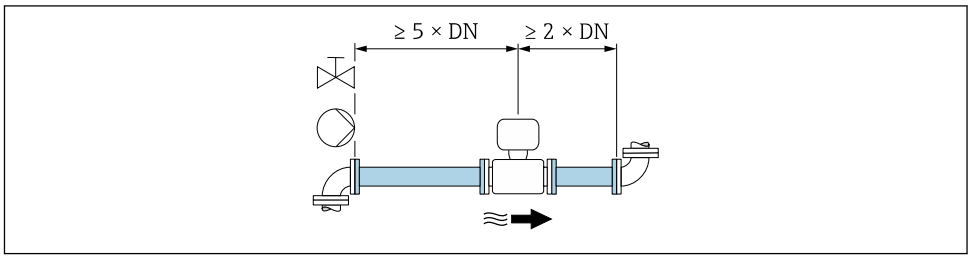

Installation dimensions

For the dimensions and installation lengths of the device, see the "Technical Information" document, "Mechanical construction" section.

6.1.2 Environment and process requirements

Ambient temperature range

Transmitter	▪ Standard: −40 to +60 °C (−40 to +140 °F) ▪ Optional: −50 to +60 °C (−58 to +140 °F) (order code for "Test, certificate", option **JN** "Ambient temperature of transmitter −50 °C (−58 °F)")
Local display	−20 to +60 °C (−4 to +140 °F), the readability of the display may be impaired at temperatures outside the temperature range.
Sensor	▪ Process connection material, carbon steel: −10 to +60 °C (+14 to +140 °F) ▪ Process connection material, stainless steel: −40 to +60 °C (−40 to +140 °F)
Liner	Do not exceed or fall below the permitted temperature range of the liner .

If operating outdoors:
- Install the measuring device in a shady location.
- Avoid direct sunlight, particularly in warm climatic regions.
- Avoid direct exposure to weather conditions.

System pressure

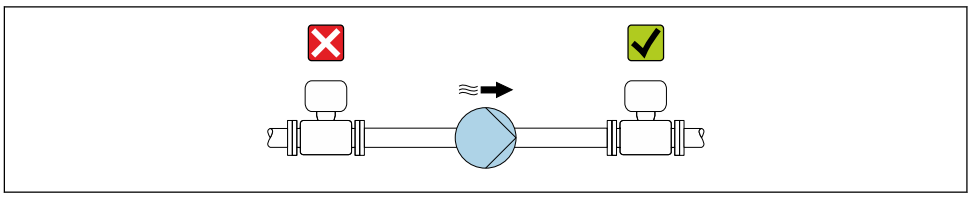

Never install the sensor on the pump suction side in order to avoid the risk of low pressure, and thus damage to the liner.

Furthermore, install pulse dampers if reciprocating, diaphragm or peristaltic pumps are used.

- Information on the liner's resistance to partial vacuum
- Information on the shock resistance of the measuring system
- Information on the vibration resistance of the measuring system

Vibrations

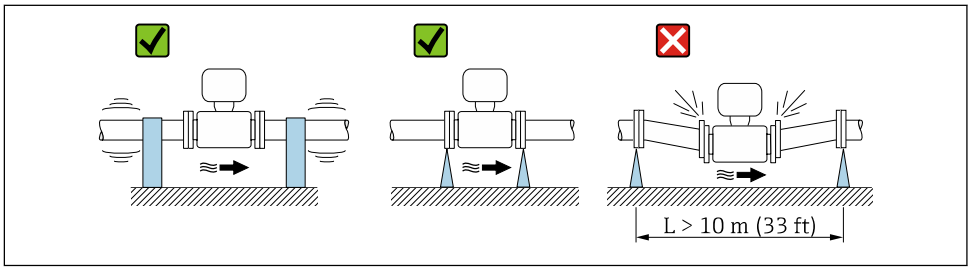

7 *Measures to prevent vibration of the device*

In the event of very strong vibrations, the pipe and sensor must be supported and fixed.

- Information on the shock resistance of the measuring system
- Information on the vibration resistance of the measuring system

Thermal insulation

If process fluids are very hot, it is necessary to insulate pipes in order to reduce energy loss and to prevent individuals from accidentally coming into contact with hot pipes. Please observe the applicable standards and guidelines for insulating pipes.

A housing support/an extended neck is used for heat dissipation:
- Devices with the order code for "Lining", option **B** "PFA high-temperature" always come with a housing support.
- In the case of all other devices, a housing support can be ordered via the order code for "Sensor option", option **CG** "Sensor extended neck".

WARNING

Electronics overheating on account of thermal insulation!

▶ The housing support is used for heat dissipation and must be completely free (i.e. uncovered). At the very maximum, the sensor insulation may extend as far as the upper edge of the two sensor half-shells.

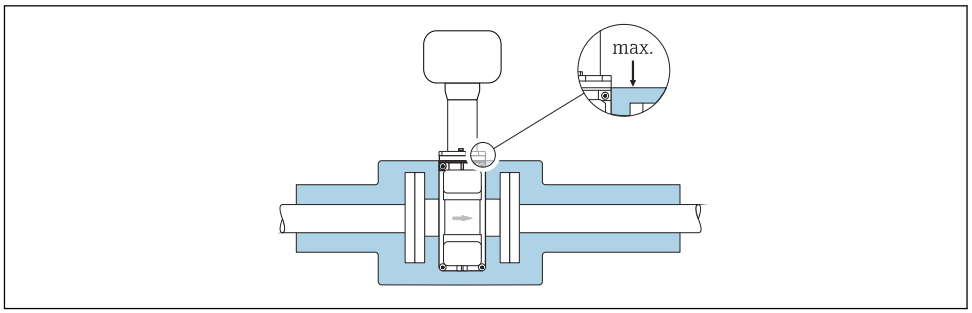

A0031216

Adapters

Suitable adapters to DIN EN 545 (double-flange reducers) can be used to install the sensor in larger-diameter pipes. The resultant increase in the rate of flow improves measuring accuracy with very slow-moving fluids. The nomogram shown here can be used to calculate the pressure loss caused by reducers and expanders.

The nomogram only applies to liquids with a viscosity similar to that of water.

1. Calculate the ratio of the diameters d/D.
2. From the nomogram read off the pressure loss as a function of flow velocity (downstream from the reduction) and the d/D ratio.

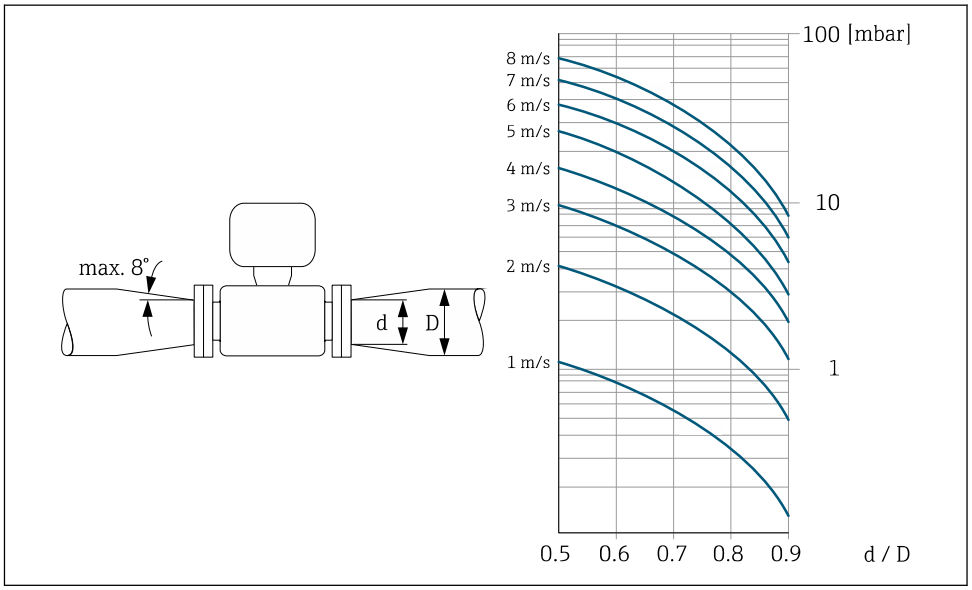

A0029002

6.1.3 Special mounting instructions

Protective cover

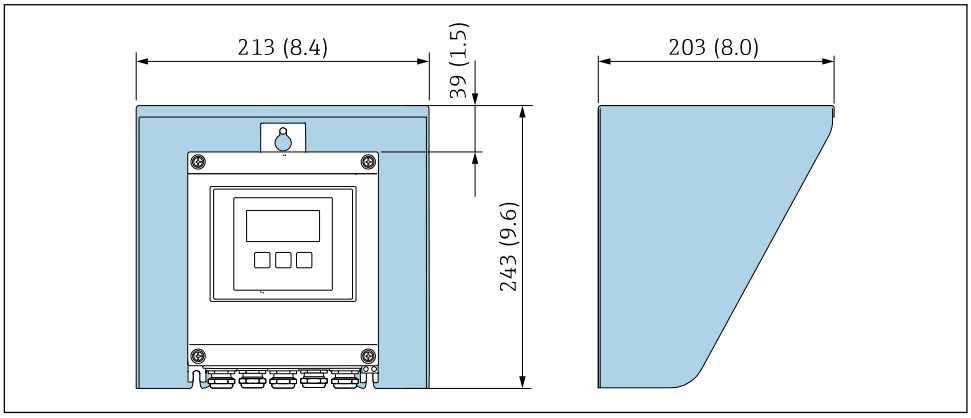

8 *Weather protection cover for Proline 500 – digital*

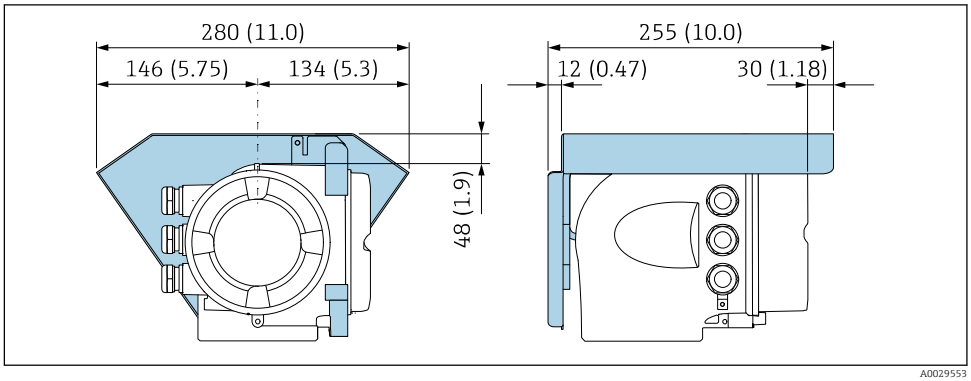

9 *Weather protection cover for Proline 500*

6.2 Mounting the measuring device

6.2.1 Required tools

For transmitter

For mounting on a post:
- Proline 500 – digital transmitter
  - Open-ended wrench AF 10
  - Torx screwdriver TX 25
- Proline 500 transmitter
  Open-ended wrench AF 13

For wall mounting:
Drill with drill bit Ø 6.0 mm

For sensor

For flanges and other process connections: Corresponding mounting tools

6.2.2 Preparing the measuring device

1. Remove all remaining transport packaging.
2. Remove any protective covers or protective caps present from the sensor.
3. Remove stick-on label on the electronics compartment cover.

6.2.3 Mounting the sensor

⚠ WARNING

Danger due to improper process sealing!

- ▶ Ensure that the inside diameters of the gaskets are greater than or equal to that of the process connections and piping.
- ▶ Ensure that the gaskets are clean and undamaged.
- ▶ Install the gaskets correctly.

1. Ensure that the direction of the arrow on the sensor matches the flow direction of the medium.
2. To ensure compliance with device specifications, install the measuring device between the pipe flanges in a way that it is centered in the measurement section.
3. If using ground disks, comply with the Installation Instructions provided.
4. Observe required screw tightening torques → 🖹 30.
5. Install the measuring device or turn the transmitter housing so that the cable entries do not point upwards.

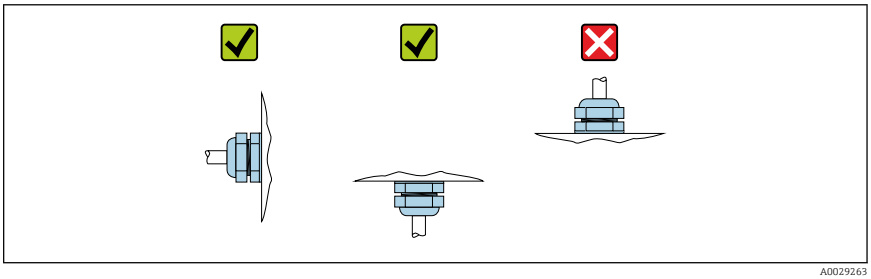

A0029263

Mounting the seals

⚠ CAUTION

An electrically conductive layer could form on the inside of the measuring tube!

Risk of measuring signal short circuit.

- ▶ Do not use electrically conductive sealing compounds such as graphite.

Comply with the following instructions when installing seals:

1. For DIN flanges: only use seals according to DIN EN 1514-1.
2. For "PFA" liner: generally additional seals are **not** required.
3. For "PTFE" liner: generally additional seals are **not** required.

Mounting the ground cable/ground disks

Comply with the information on potential equalization and detailed mounting instructions for the use of ground cables/ground disks .

Screw tightening torques

Please note the following:
- The screw tightening torques listed below apply only to lubricated threads and to pipes not subjected to tensile stress.
- Tighten the screws uniformly and in diagonally opposite sequence.
- Overtightening the screws will deform the sealing faces or damage the seals.

Nominal screw tightening torques → 33

Maximum screw tightening torques

Maximum screw tightening torques for EN 1092-1 (DIN 2501)

Nominal diameter	Pressure rating	Screws	Flange thickness	Max. screw tightening torque [Nm]	
[mm]	[bar]	[mm]	[mm]	PTFE	PFA
15	PN 40	4 × M12	16	11	–
25	PN 40	4 × M12	18	26	20
32	PN 40	4 × M16	18	41	35
40	PN 40	4 × M16	18	52	47
50	PN 40	4 × M16	20	65	59
65 [1)]	PN 16	8 × M16	18	43	40
65	PN 40	8 × M16	22	43	40
80	PN 16	8 × M16	20	53	48
80	PN 40	8 × M16	24	53	48
100	PN 16	8 × M16	20	57	51
100	PN 40	8 × M20	24	78	70
125	PN 16	8 × M16	22	75	67
125	PN 40	8 × M24	26	111	99
150	PN 16	8 × M20	22	99	85
150	PN 40	8 × M24	28	136	120
200	PN 10	8 × M20	24	141	101
200	PN 16	12 × M20	24	94	67
200	PN 25	12 × M24	30	138	105
250	PN 10	12 × M20	26	110	–
250	PN 16	12 × M24	26	131	–
250	PN 25	12 × M27	32	200	–
300	PN 10	12 × M20	26	125	–
300	PN 16	12 × M24	28	179	–
300	PN 25	16 × M27	34	204	–
350	PN 10	16 × M20	26	188	–
350	PN 16	16 × M24	30	254	–
350	PN 25	16 × M30	38	380	–
400	PN 10	16 × M24	26	260	–
400	PN 16	16 × M27	32	330	–
400	PN 25	16 × M33	40	488	–
450	PN 10	20 × M24	28	235	–
450	PN 16	20 × M27	40	300	–

Nominal diameter	Pressure rating	Screws	Flange thickness	Max. screw tightening torque [Nm]	
[mm]	[bar]	[mm]	[mm]	PTFE	PFA
450	PN 25	20 × M33	46	385	–
500	PN 10	20 × M24	28	265	–
500	PN 16	20 × M30	34	448	–
500	PN 25	20 × M33	48	533	–
600	PN 10	20 × M27	28	345	–
600	PN 16	20 × M33	36	658	–
600	PN 25	20 × M36	58	731	–

1) Sizing as per EN 1092-1 (not DIN 2501)

Screw tightening torques for ASME B16.5, Class 150/300

Nominal diameter		Pressure rating	Screws	Max. screw tightening torque [Nm] ([lbf · ft])	
[mm]	[in]	[psi]	[in]	PTFE	PFA
15	½	Class 150	4 × ½	6 (4)	– (–)
15	½	Class 300	4 × ½	6 (4)	– (–)
25	1	Class 150	4 × ½	11 (8)	10 (7)
25	1	Class 300	4 × 5/8	14 (10)	12 (9)
40	1 ½	Class 150	4 × ½	24 (18)	21 (15)
40	1 ½	Class 300	4 × ¾	34 (25)	31 (23)
50	2	Class 150	4 × 5/8	47 (35)	44 (32)
50	2	Class 300	8 × 5/8	23 (17)	22 (16)
80	3	Class 150	4 × 5/8	79 (58)	67 (49)
80	3	Class 300	8 × ¾	47 (35)	42 (31)
100	4	Class 150	8 × 5/8	56 (41)	50 (37)
100	4	Class 300	8 × ¾	67 (49)	59 (44)
150	6	Class 150	8 × ¾	106 (78)	86 (63)
150	6	Class 300	12 × ¾	73 (54)	67 (49)
200	8	Class 150	8 × ¾	143 (105)	109 (80)
250	10	Class 150	12 × 7/8	135 (100)	– (–)
300	12	Class 150	12 × 7/8	178 (131)	– (–)
350	14	Class 150	12 × 1	260 (192)	– (–)
400	16	Class 150	16 × 1	246 (181)	– (–)
450	18	Class 150	16 × 1 1/8	371 (274)	– (–)
500	20	Class 150	20 × 1 1/8	341 (252)	– (–)
600	24	Class 150	20 × 1 ¼	477 (352)	– (–)

Maximum screw tightening torques for JIS B2220

Nominal diameter	Pressure rating	Screws	Max. screw tightening torque [Nm]	
[mm]	[bar]	[mm]	PTFE	PFA
25	10K	4 × M16	32	27
	20K	4 × M16	32	27

Nominal diameter [mm]	Pressure rating [bar]	Screws [mm]	Max. screw tightening torque [Nm]	
			PTFE	PFA
32	10K	4 × M16	38	–
	20K	4 × M16	38	–
40	10K	4 × M16	41	37
	20K	4 × M16	41	37
50	10K	4 × M16	54	46
	20K	8 × M16	27	23
65	10K	4 × M16	74	63
	20K	8 × M16	37	31
80	10K	8 × M16	38	32
	20K	8 × M20	57	46
100	10K	8 × M16	47	38
	20K	8 × M20	75	58
125	10K	8 × M20	80	66
	20K	8 × M22	121	103
150	10K	8 × M20	99	81
	20K	12 × M22	108	72
200	10K	12 × M20	82	54
	20K	12 × M22	121	88
250	10K	12 × M22	133	–
	20K	12 × M24	212	–
300	10K	16 × M22	99	–
	20K	16 × M24	183	–

Screw tightening torques for AS 2129, Table E

Nominal diameter [mm]	Screws [mm]	Max. screw tightening torque [Nm] PTFE
25	4 × M12	21
50	4 × M16	42

Screw tightening torques for AS 4087, PN 16

Nominal diameter [mm]	Screws [mm]	Max. screw tightening torque [Nm] PTFE
50	4 × M16	42

Nominal screw tightening torques

Nominal screw tightening torques for JIS B2220

Nominal diameter [mm]	Pressure rating [bar]	Screws [mm]	Nom. screw tightening torque [Nm]	
			HG	PUR
350	10K	16 × M22	109	109
	20K	16 × M30×3	217	217
400	10K	16 × M24	163	163
	20K	16 × M30×3	258	258
450	10K	16 × M24	155	155
	20K	16 × M30×3	272	272
500	10K	16 × M24	183	183
	20K	16 × M30×3	315	315
600	10K	16 × M30	235	235
	20K	16 × M36×3	381	381

6.2.4 Mounting the transmitter housing: Proline 500 – digital

⚠ CAUTION

Ambient temperature too high!

Danger of electronics overheating and housing deformation.

- ▶ Do not exceed the permitted maximum ambient temperature → 🖹 25.
- ▶ If operating outdoors: Avoid direct sunlight and exposure to weathering, particularly in warm climatic regions.

⚠ CAUTION

Excessive force can damage the housing!

- ▶ Avoid excessive mechanical stress.

The transmitter can be mounted in the following ways:

- Post mounting
- Wall mounting

Post mounting

⚠ WARNING

Excessive tightening torque applied to the fixing screws!

Risk of damaging the plastic transmitter.

- ▶ Tighten the fixing screws as per the tightening torque: 2 Nm (1.5 lbf ft)

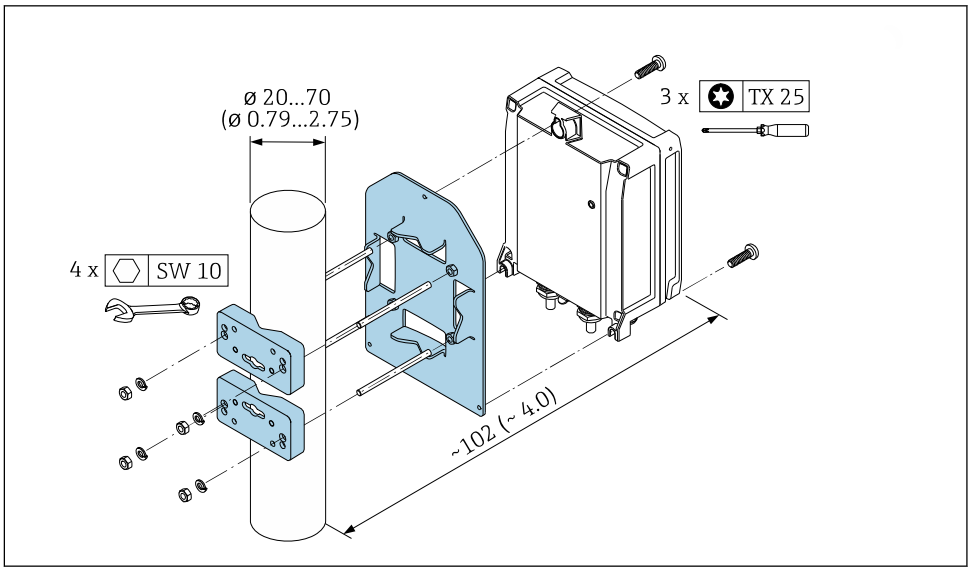

10 *Engineering unit mm (in)*

Wall mounting

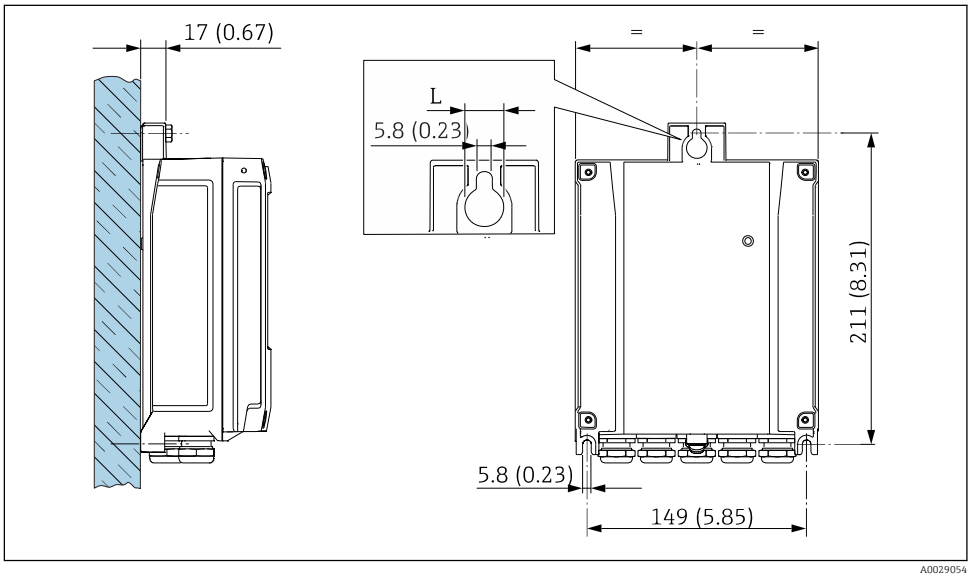

11 *Engineering unit mm (in)*

L Depends on order code for "Transmitter housing"

Order code for "Transmitter housing"
- Option **A**, aluminum coated: L =14 mm (0.55 in)
- Option **D**, polycarbonate: L = 13 mm (0.51 in)

1. Drill the holes.
2. Insert wall plugs into the drilled holes.
3. Screw in the securing screws slightly at first.
4. Fit the transmitter housing over the securing screws and mount in place.
5. Tighten the securing screws.

6.2.5 Mounting the transmitter housing: Proline 500

⚠ CAUTION

Ambient temperature too high!

Danger of electronics overheating and housing deformation.

- ▶ Do not exceed the permitted maximum ambient temperature → 🖹 25.
- ▶ If operating outdoors: Avoid direct sunlight and exposure to weathering, particularly in warm climatic regions.

⚠ CAUTION

Excessive force can damage the housing!

- ▶ Avoid excessive mechanical stress.

The transmitter can be mounted in the following ways:

- Post mounting
- Wall mounting

Wall mounting

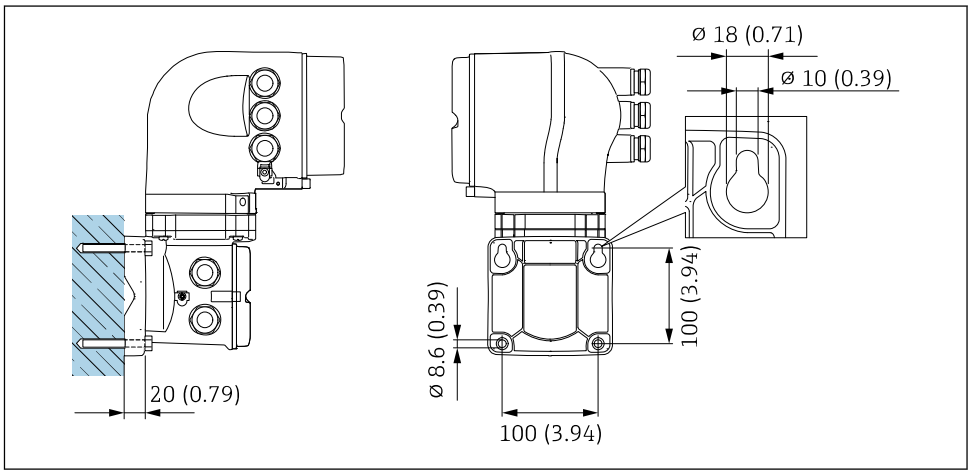

12 *Engineering unit mm (in)*

1. Drill the holes.
2. Insert wall plugs into the drilled holes.
3. Screw in the securing screws slightly at first.
4. Fit the transmitter housing over the securing screws and mount in place.
5. Tighten the securing screws.

Post mounting

⚠ WARNING

Order code for "Transmitter housing", option L "Cast, stainless": cast transmitters are very heavy.

They are unstable if they are not mounted on a secure, fixed post.

► Only mount the transmitter on a secure, fixed post on a stable surface.

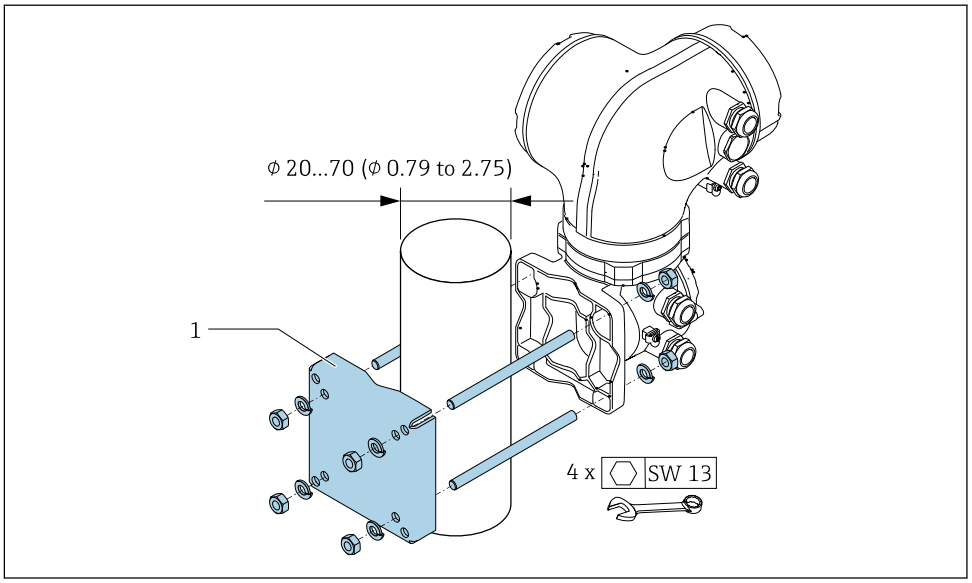

13 *Engineering unit mm (in)*

6.2.6 Turning the transmitter housing: Proline 500

To provide easier access to the connection compartment or display module, the transmitter housing can be turned.

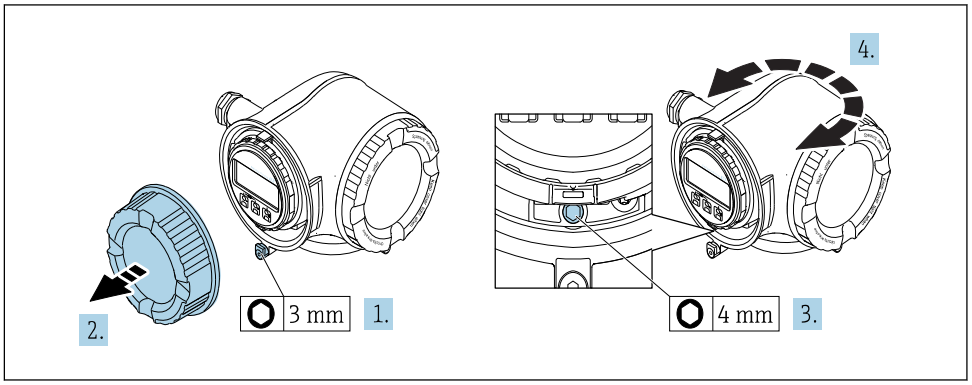

1. Depending on the device version: Loosen the securing clamp of the connection compartment cover.
2. Unscrew the connection compartment cover.
3. Release the fixing screw.
4. Turn the housing to the desired position.
5. Firmly tighten the securing screw.
6. Screw on the connection compartment cover

7. Depending on the device version: Attach the securing clamp of the connection compartment cover.

6.2.7 Turning the display module: Proline 500

The display module can be turned to optimize display readability and operability.

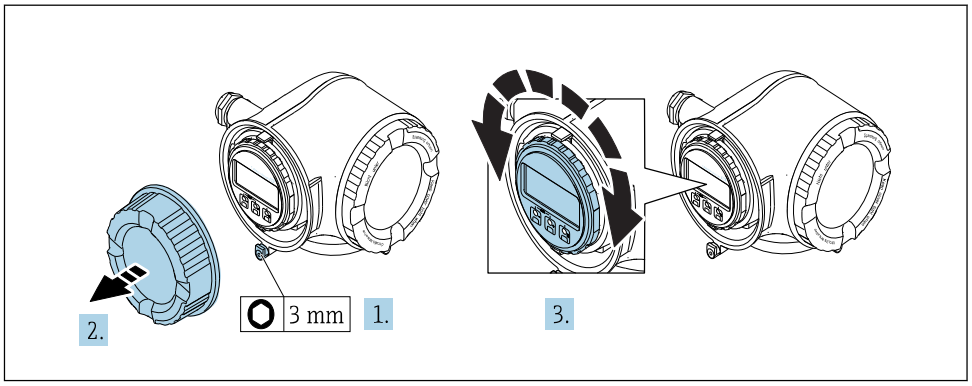

A0030035

1. Depending on the device version: Loosen the securing clamp of the connection compartment cover.
2. Unscrew the connection compartment cover.
3. Turn the display module to the desired position: max. 8 × 45° in each direction.
4. Screw on the connection compartment cover.
5. Depending on the device version: Attach the securing clamp of the connection compartment cover.

6.3 Post-installation check

Is the device undamaged (visual inspection)?	❑
Does the measuring device conform to the measuring point specifications? For example: ▪ Process temperature ▪ Process pressure (refer to the section on "Pressure-temperature ratings" in the "Technical Information" document) ▪ Ambient temperature ▪ Measuring range	❑
Has the correct orientation for the sensor been selected ? ▪ According to sensor type ▪ According to medium temperature ▪ According to medium properties (outgassing, with entrained solids)	❑
Does the arrow on the sensor nameplate match the direction of flow of the fluid through the piping ?	❑
Are the measuring point identification and labeling correct (visual inspection)?	❑
Is the device adequately protected from precipitation and direct sunlight?	❑
Have the fixing screws been tightened with the correct tightening torque?	❑

7 Electrical connection

NOTICE

The measuring device does not have an internal circuit breaker.

- ▶ For this reason, assign the measuring device a switch or power-circuit breaker so that the power supply line can be easily disconnected from the mains.
- ▶ Although the measuring device is equipped with a fuse, additional overcurrent protection (maximum 10 A) should be integrated into the system installation.

7.1 Connection conditions

7.1.1 Required tools

- For cable entries: Use corresponding tools
- For securing clamp: Allen key 3 mm
- Wire stripper
- When using stranded cables: crimper for wire end ferrule
- For removing cables from terminal: Flat blade screwdriver ≤ 3 mm (0.12 in)

7.1.2 Requirements for connecting cable

The connecting cables provided by the customer must fulfill the following requirements.

Electrical safety

In accordance with applicable federal/national regulations.

Protective ground cable

Cable ≥2.08 mm^2 (14 AWG)

The grounding impedance must be less than 1 Ω.

Permitted temperature range

- The installation guidelines that apply in the country of installation must be observed.
- The cables must be suitable for the minimum and maximum temperatures to be expected.

Power supply cable

Standard installation cable is sufficient.

Signal cable

Current output 4 to 20 mA HART

A shielded cable is recommended. Observe grounding concept of the plant.

Current output 0/4 to 20 mA

Standard installation cable is sufficient.

Pulse/frequency/switch output

Standard installation cable is sufficient.

Double pulse output

Standard installation cable is sufficient.

Relay output

Standard installation cable is sufficient.

Current input 0/4 to 20 mA

Standard installation cable is sufficient.

Status input

Standard installation cable is sufficient.

Cable diameter

- Cable glands supplied:
  M20 × 1.5 with cable Ø 6 to 12 mm (0.24 to 0.47 in)
- Spring-loaded terminals: Suitable for strands and strands with ferrules.
  Conductor cross-section 0.2 to 2.5 mm^2 (24 to 12 AWG).

Choice of connecting cable between the transmitter and sensor

Depends on the type of transmitter and the installation zones

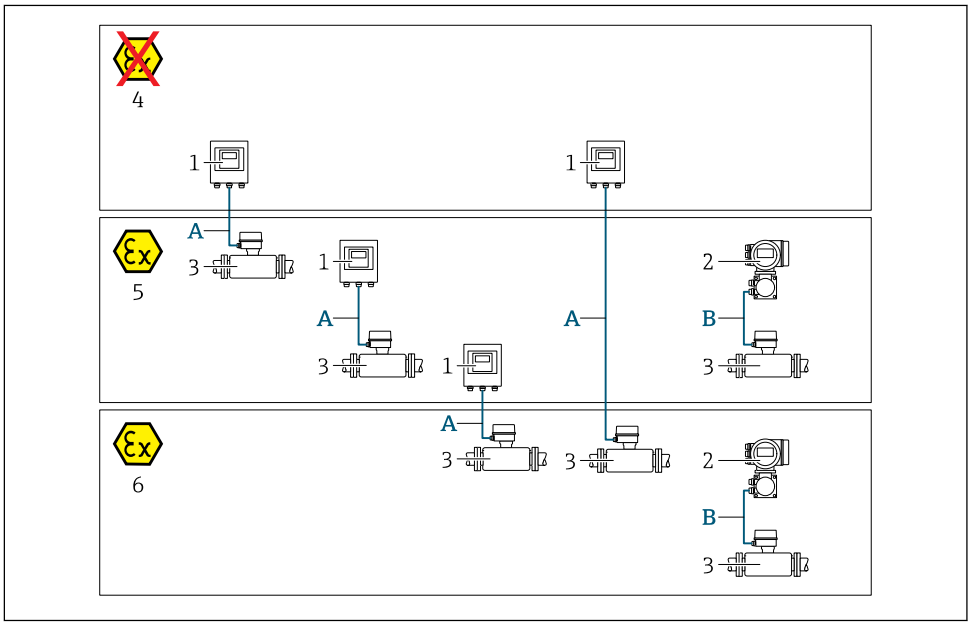

1 *Proline 500 digital transmitter*
2 *Proline 500 transmitter*
3 *Promag sensor*
4 *Non-hazardous area*
5 *Hazardous area: Zone 2; Class I, Division 2*
6 *Hazardous area: Zone 1; Class I, Division 1*
A *Standard cable to 500 digital transmitter → 40*
Transmitter installed in the non-hazardous area or hazardous area: Zone 2; Class I, Division 2 / sensor installed in the hazardous area: Zone 2; Class I, Division 2 or Zone 1; Class I, Division 1
B *Signal cable to 500 transmitter → 41*
Transmitter and sensor installed in the hazardous area: Zone 2; Class I, Division 2 oder Zone 1; Class I, Division 1

A: Connecting cable between sensor and transmitter: Proline 500 – digital

Standard cable

A standard cable with the following specifications can be used as the connecting cable.

Design	4 cores (2 pairs); uninsulated stranded CU wires; pair-stranded with common shield
Shielding	Tin-plated copper-braid, optical cover ≥ 85 %
Cable length	Maximum 300 m (1 000 ft), see the following table.

Cross-section	**Cable lengths for use in**	
	Non-hazardous area, Hazardous area: Zone 2; Class I, Division 2	**Hazardous area: Zone 1; Class I, Division 1**
0.34 mm² (AWG 22)	80 m (270 ft)	50 m (165 ft)
0.50 mm² (AWG 20)	120 m (400 ft)	60 m (200 ft)
0.75 mm² (AWG 18)	180 m (600 ft)	90 m (300 ft)
1.00 mm² (AWG 17)	240 m (800 ft)	120 m (400 ft)

Cross-section	Cable lengths for use in	
	Non-hazardous area, Hazardous area: Zone 2; Class I, Division 2	Hazardous area: Zone 1; Class I, Division 1
1.50 mm² (AWG 15)	300 m (1 000 ft)	180 m (600 ft)
2.50 mm² (AWG 13)	300 m (1 000 ft)	300 m (1 000 ft)

Optionally available connecting cable

Design	2 × 2 × 0.34 mm² (AWG 22) PVC cable [1] with common shield (2 pairs, uninsulated stranded CU wires; pair-stranded)
Flame resistance	According to DIN EN 60332-1-2
Oil-resistance	According to DIN EN 60811-2-1
Shielding	Tin-plated copper-braid, optical cover ≥ 85 %
Operating temperature	When mounted in a fixed position: −50 to +105 °C (−58 to +221 °F); when cable can move freely: −25 to +105 °C (−13 to +221 °F)
Available cable length	Fixed: 20 m (65 ft); variable: up to maximum 50 m (165 ft)

1) UV radiation can impair the cable outer sheath. Protect the cable from direct sunshine where possible.

B: Connecting cable between sensor and transmitter: Proline 500

Signal cable

Design	3 × 0.38 mm² (20 AWG) with common, braided copper shield (Ø ~ 9.5 mm (0.37 in)) and individual shielded cores
Conductor resistance	≤50 Ω/km (0.015 Ω/ft)
Capacitance: core/shield	≤420 pF/m (128 pF/ft)
Cable length (max.)	Depends on the medium conductivity, max. 200 m (656 ft)
Cable lengths (available for order)	5 m (15 ft), 10 m (32 ft), 20 m (65 ft) or variable length up to max. 200 m (656 ft)
Operating temperature	−20 to +80 °C (−68 to +176 °F)

Coil current cable

Design	3 × 0.75 mm² (18 AWG) with common, braided copper shield (Ø ~ 9 mm (0.35 in)) and individual shielded cores
Conductor resistance	≤37 Ω/km (0.011 Ω/ft)
Capacitance: core/core, shield grounded	≤120 pF/m (37 pF/ft)
Cable length (max.)	Depends on the medium conductivity, max. 200 m (656 ft)
Cable lengths (available for order)	5 m (15 ft), 10 m (32 ft), 20 m (65 ft) or variable length up to max. 200 m (656 ft)
Operating temperature	−20 to +80 °C (−68 to +176 °F)
Test voltage for cable insulation	≤ AC 1433 V rms 50/60 Hz or ≥ DC 2026 V

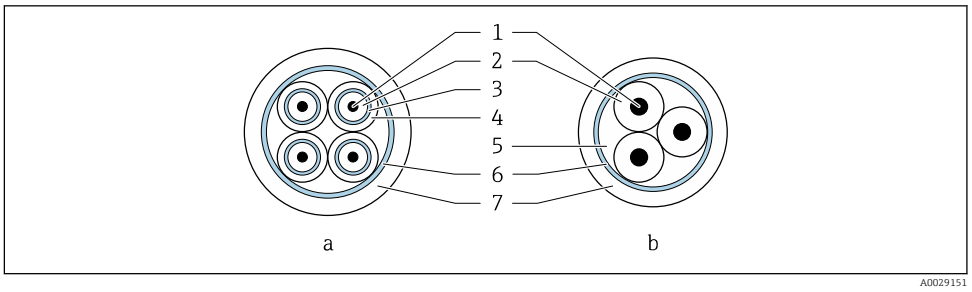

14 Cable cross-section

a Electrode cable
b Coil current cable
1 Core
2 Core insulation
3 Core shield
4 Core jacket
5 Core reinforcement
6 Cable shield
7 Outer jacket

Reinforced connecting cables

Reinforced connecting cables with an additional, reinforcing metal braid should be used for:
- When laying the cable directly in the ground
- Where there is a risk of damage from rodents

Operation in zones of severe electrical interference

The measuring system meets the general safety requirements → 206 and EMC specifications → 193.

Grounding is by means of the ground terminal provided for the purpose inside the connection housing. The stripped and twisted lengths of cable shield to the ground terminal must be as short as possible.

7.1.3 Terminal assignment

Transmitter: supply voltage, input/outputs

The terminal assignment of the inputs and outputs depends on the individual order version of the device. The device-specific terminal assignment is documented on an adhesive label in the terminal cover.

Supply voltage		Input/output 1		Input/output 2		Input/output 3		Input/output 4	
1 (+)	2 (–)	26 (+)	27 (–)	24 (+)	25 (–)	22 (+)	23 (–)	20 (+)	21 (–)
		Device-specific terminal assignment: adhesive label in terminal cover.							

Transmitter and sensor connection housing: connecting cable

The sensor and transmitter, which are mounted in separate locations, are interconnected by a connecting cable. The cable is connected via the sensor connection housing and the transmitter housing.

Terminal assignment and connection of the connecting cable:
- Proline 500 – digital→ 46
- Proline 500 → 51

7.1.4 Preparing the measuring device

Carry out the steps in the following order:

1. Mount the sensor and transmitter.
2. Connection housing, sensor: Connect connecting cable.
3. Transmitter: Connect connecting cable.
4. Transmitter: Connect signal cable and cable for supply voltage.

NOTICE

Insufficient sealing of the housing!

Operational reliability of the measuring device could be compromised.

▶ Use suitable cable glands corresponding to the degree of protection.

1. Remove dummy plug if present.
2. If the measuring device is supplied without cable glands:
   Provide suitable cable gland for corresponding connecting cable.
3. If the measuring device is supplied with cable glands:
   Observe requirements for connecting cables → 38.

7.1.5 Preparing the connecting cable: Proline 500 – digital

When terminating the connecting cable, pay attention to the following points:

- For cables with fine-wire cores (stranded cables):
  Fit the cores with ferrules.

Transmitter	Sensor
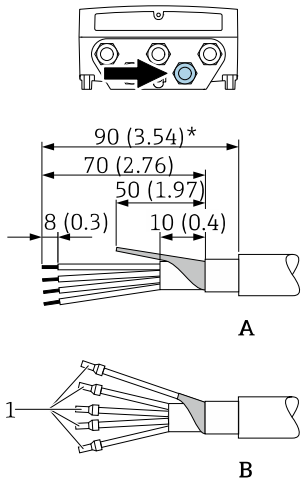	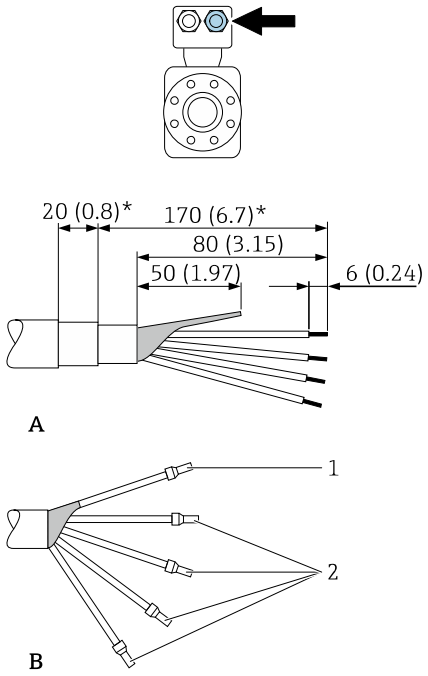

Engineering unit mm (in)
A = Terminate the cable
B = Fit ferrules on cables with fine-wire cores (stranded cables)
1 = Red ferrules, Φ 1.0 mm (0.04 in)
2 = White ferrules, Φ 0.5 mm (0.02 in)
* = Stripping only for reinforced cables

7.1.6 Preparing the connecting cable: Proline 500

When terminating the connecting cable, pay attention to the following points:

1. In the case of the electrode cable:
   Make sure that the ferrules do not touch the core shields on the sensor side.
   Minimum distance = 1 mm (exception: green “GND” cable)
2. In the case of the coil current cable:
   Insulate one core of the three-core cable at the level of the core reinforcement. You only require two cores for the connection.
3. For cables with fine-wire cores (stranded cables):
   Fit the cores with ferrules.

Transmitter

Electrode cable

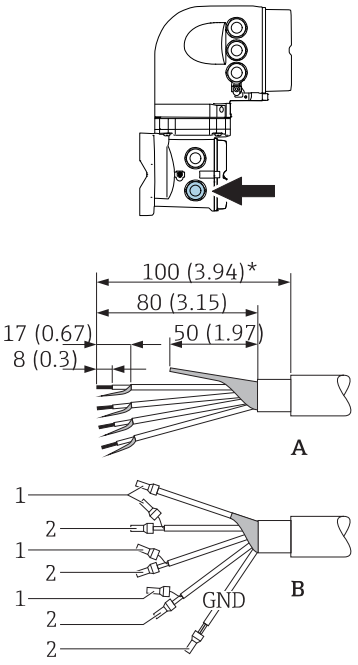

Coil current cable

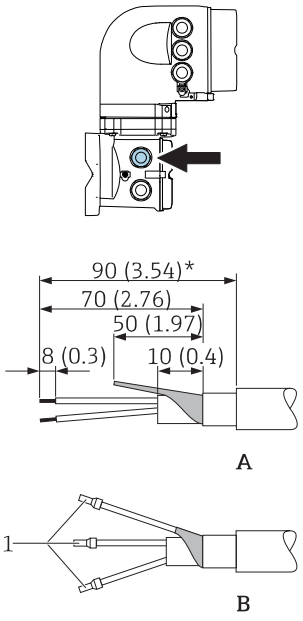

Sensor

Electrode cable

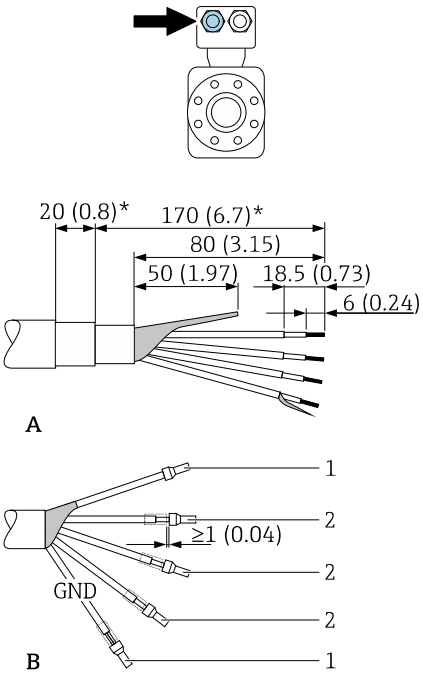

Coil current cable

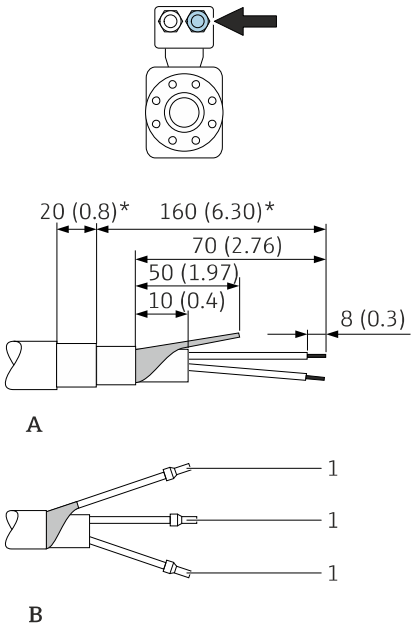

Engineering unit mm (in)
A = Terminate the cable
B = Fit ferrules on cables with fine-wire cores (stranded cables)
1 = Red ferrules, ϕ 1.0 mm (0.04 in)
2 = White ferrules, ϕ 0.5 mm (0.02 in)
* = Stripping only for reinforced cables

7.2 Connecting the measuring device: Proline 500 - digital

NOTICE

Limitation of electrical safety due to incorrect connection!

- ▶ Have electrical connection work carried out by appropriately trained specialists only.
- ▶ Observe applicable federal/national installation codes and regulations.
- ▶ Comply with local workplace safety regulations.
- ▶ Always connect the protective ground cable ⏚ before connecting additional cables.
- ▶ For use in potentially explosive atmospheres, observe the information in the device-specific Ex documentation.

7.2.1 Connecting the connecting cable

⚠ WARNING

Risk of damaging the electronic components!

- ▶ Connect the sensor and transmitter to the same potential equalization.
- ▶ Only connect the sensor to a transmitter with the same serial number.
- ▶ Ground the connection housing of the sensor via the external screw terminal.

Connecting cable terminal assignment

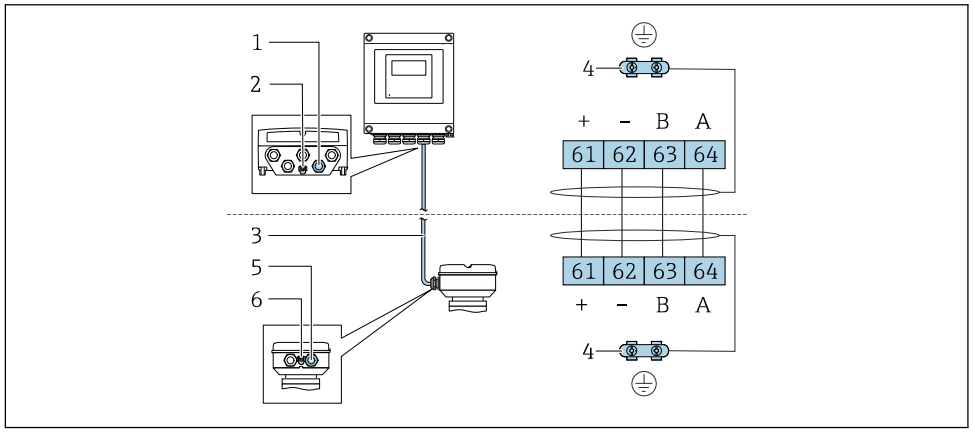

1 Cable entry for cable on transmitter housing
2 Protective earth (PE)
3 Connecting cable ISEM communication
4 Grounding via ground connection; on device plug versions grounding is through the plug itself
5 Cable entry for cable or connection of device plug on sensor connection housing
6 Protective earth (PE)

Connecting the connecting cable to the sensor connection housing

Connection via terminals with order code for "Sensor connection housing":
- Option **A** "Aluminum, coated"→ 🖹 47
- Option **L** "Cast, stainless"→ 🖹 47

Connecting the connecting cable to the transmitter

The cable is connected to the transmitter via terminals → 🖹 48.

Connecting the sensor connection housing via terminals

For the device version with the order code for "Sensor connection housing":
- Option **A** "Aluminum coated"
- Option **L** "Cast, stainless"

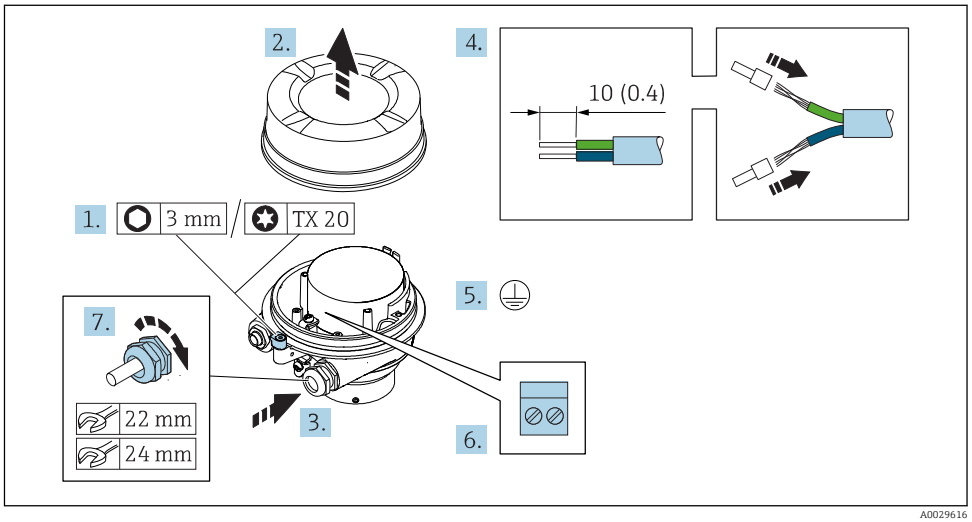

A0029616

1. Loosen the securing clamp of the housing cover.
2. Unscrew the housing cover.
3. Push the cable through the cable entry . To ensure tight sealing, do not remove the sealing ring from the cable entry.
4. Strip the cable and cable ends. In the case of stranded cables, fit ferrules.
5. Connect the protective ground.
6. Connect the cable in accordance with the connecting cable terminal assignment.
7. Firmly tighten the cable glands.
   ↳ This concludes the process for connecting the connecting cable.

⚠ WARNING

Housing degree of protection voided due to insufficient sealing of the housing.

▶ Screw in the thread on the cover without using any lubricant. The thread on the cover is coated with a dry lubricant.

8. Screw on the housing cover.
9. Tighten the securing clamp of the housing cover.

Connecting the connecting cable to the transmitter

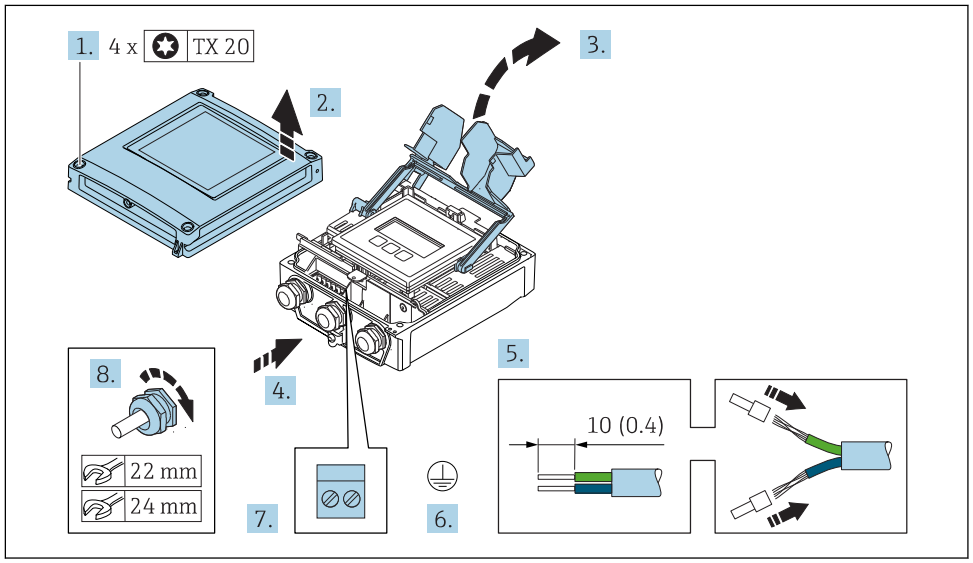

1. Loosen the 4 fixing screws on the housing cover.
2. Open the housing cover.
3. Fold open the terminal cover.
4. Push the cable through the cable entry . To ensure tight sealing, do not remove the sealing ring from the cable entry.
5. Strip the cable and cable ends. In the case of stranded cables, fit ferrules.
6. Connect the protective ground.
7. Connect the cable in accordance with the connecting cable terminal assignment → 46.
8. Firmly tighten the cable glands.
   ↳ This concludes the process for connecting the connecting cable.
9. Close the housing cover.
10. Tighten the securing screw of the housing cover.
11. After connecting the connecting cable:
    Connect the signal cable and the supply voltage cable → 49.

7.2.2 Connecting the signal cable and the supply voltage cable

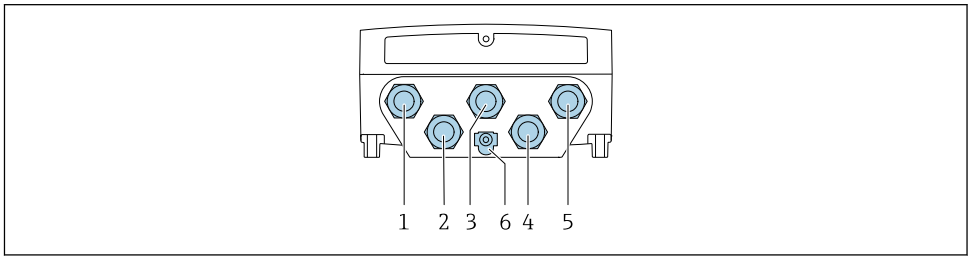

1 *Terminal connection for supply voltage*
2 *Terminal connection for signal transmission, input/output*
3 *Terminal connection for signal transmission, input/output*
4 *Terminal connection for connecting cable between sensor and transmitter*
5 *Terminal connection for signal transmission, input/output; optional: connection for external WLAN antenna*
6 *Protective earth (PE)*

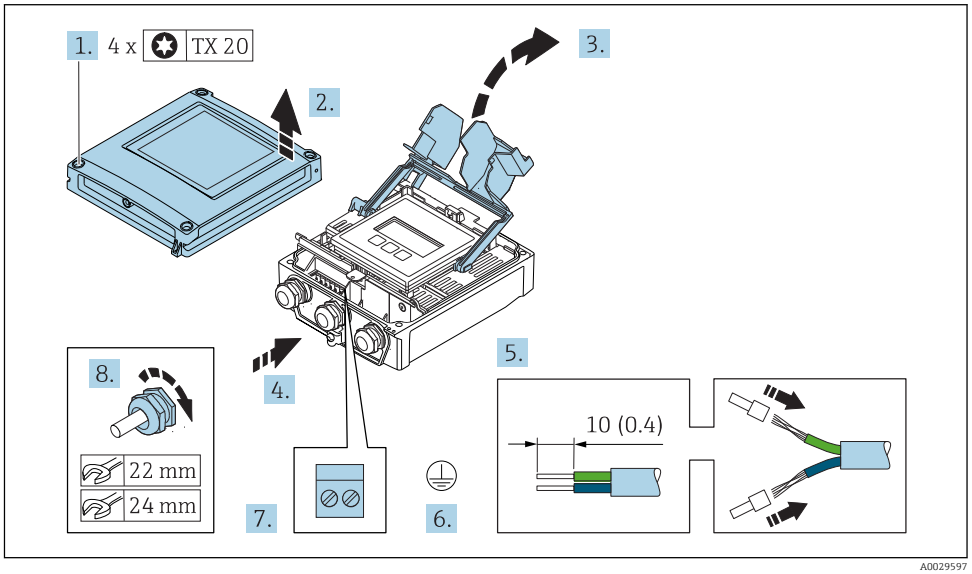

1. Loosen the 4 fixing screws on the housing cover.
2. Open the housing cover.
3. Fold open the terminal cover.
4. Push the cable through the cable entry . To ensure tight sealing, do not remove the sealing ring from the cable entry.
5. Strip the cable and cable ends. In the case of stranded cables, fit ferrules.
6. Connect the protective ground.
7. Connect the cable in accordance with the terminal assignment .
   ↳ **Signal cable terminal assignment:** The device-specific terminal assignment is documented on an adhesive label in the terminal cover.
   Supply voltage terminal assignment: Adhesive label in the terminal cover or → 📄 42.
8. Firmly tighten the cable glands.
   ↳ This concludes the cable connection process.
9. Close the terminal cover.
10. Close the housing cover.

⚠ WARNING

Housing degree of protection may be voided due to insufficient sealing of the housing.

▶ Screw in the screw without using any lubricant.

⚠ WARNING

Excessive tightening torque applied to the fixing screws!

Risk of damaging the plastic transmitter.

▶ Tighten the fixing screws as per the tightening torque: 2 Nm (1.5 lbf ft)

11. Tighten the 4 fixing screws on the housing cover.

Removing a cable

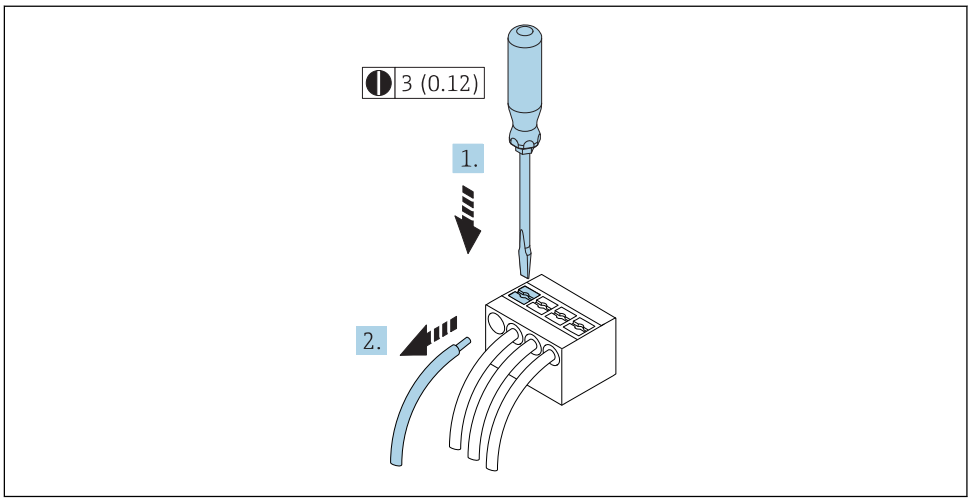

15 *Engineering unit mm (in)*

1. To remove a cable from the terminal, use a flat-blade screwdriver to push the slot between the two terminal holes
2. while simultaneously pulling the cable end out of the terminal.

7.3 Connecting the measuring device: Proline 500

NOTICE

Limitation of electrical safety due to incorrect connection!

- Have electrical connection work carried out by appropriately trained specialists only.
- Observe applicable federal/national installation codes and regulations.
- Comply with local workplace safety regulations.
- Always connect the protective ground cable ⏚ before connecting additional cables.
- For use in potentially explosive atmospheres, observe the information in the device-specific Ex documentation.

7.3.1 Connecting the connecting cable

⚠ WARNING

Risk of damaging the electronic components!

- Connect the sensor and transmitter to the same potential equalization.
- Only connect the sensor to a transmitter with the same serial number.
- Ground the connection housing of the sensor via the external screw terminal.

Connecting cable terminal assignment

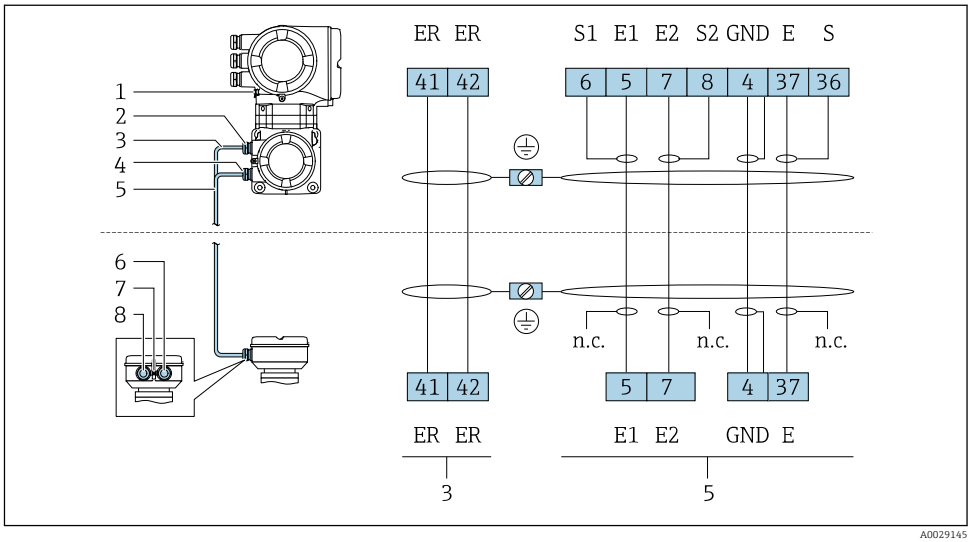

1 Protective earth (PE)
2 Cable entry for coil current cable on transmitter connection housing
3 Coil current cable
4 Cable entry for signal cable on transmitter connection housing
5 Signal cable
6 Cable entry for signal cable on sensor connection housing
7 Protective earth (PE)
8 Cable entry for coil current cable on sensor connection housing

Connecting the connecting cable to the sensor connection housing

Connection via terminals with order code for "Housing":
Option **A** "Aluminum coated"→ 🖹 52

Connecting the connecting cable to the transmitter

The cable is connected to the transmitter via terminals → 🖹 53.

Connecting the sensor connection housing via terminals

For the device version with the order code for "Housing":
- Option **A** "Aluminum coated"
- Option **L** "Cast, stainless"

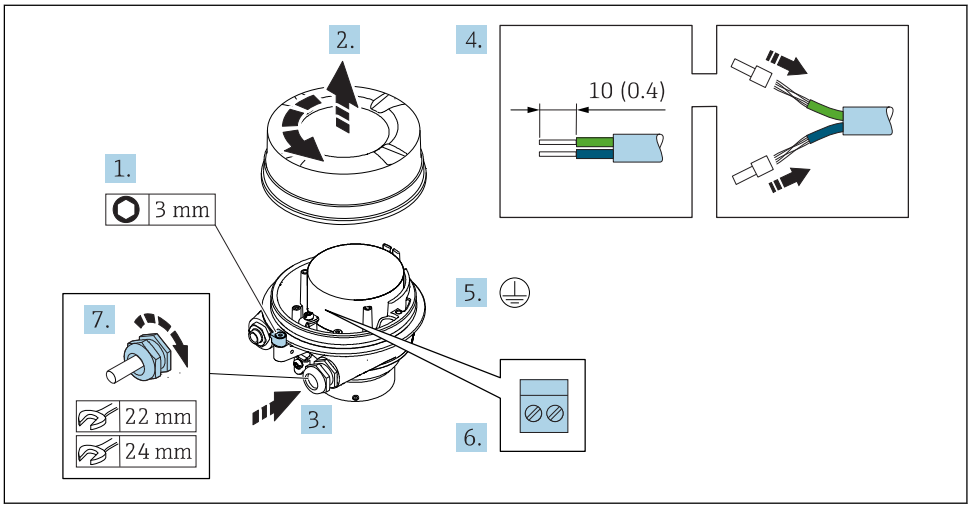

1. Loosen the securing clamp of the housing cover.
2. Unscrew the housing cover.
3. Push the cable through the cable entry . To ensure tight sealing, do not remove the sealing ring from the cable entry.
4. Strip the cable and cable ends. In the case of stranded cables, fit ferrules.
5. Connect the protective ground.
6. Connect the cable in accordance with the connecting cable terminal assignment.
7. Firmly tighten the cable glands.
   ↳ This concludes the process for connecting the connecting cables.

⚠ WARNING

Housing degree of protection voided due to insufficient sealing of the housing.

▶ Screw in the thread on the cover without using any lubricant. The thread on the cover is coated with a dry lubricant.

8. Screw on the housing cover.
9. Tighten the securing clamp of the housing cover.

Connecting the connecting cable to the transmitter

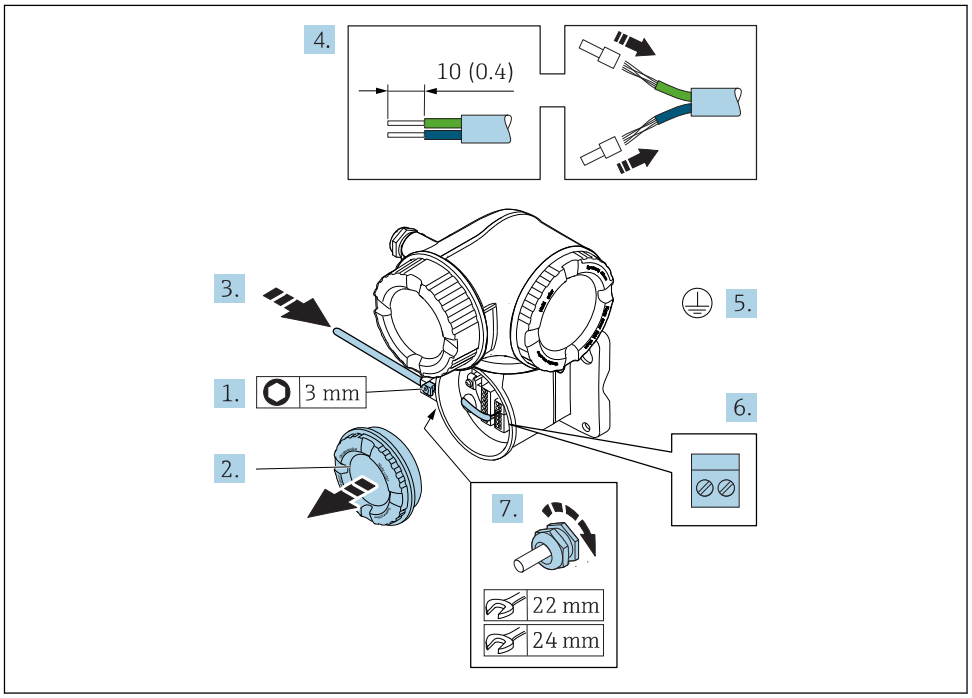

1. Loosen the securing clamp of the connection compartment cover.
2. Unscrew the connection compartment cover.
3. Push the cable through the cable entry . To ensure tight sealing, do not remove the sealing ring from the cable entry.
4. Strip the cable and cable ends. In the case of stranded cables, also fit ferrules.
5. Connect the protective ground.
6. Connect the cable in accordance with the connecting cable terminal assignment → 51.
7. Firmly tighten the cable glands.
   ↳ This concludes the process for connecting the connecting cables.
8. Screw on the connection compartment cover.
9. Tighten the securing clamp of the connection compartment cover.
10. After connecting the connecting cables:
    Connect the signal cable and the supply voltage cable → 54.

7.3.2 Connecting the signal cable and the supply voltage cable

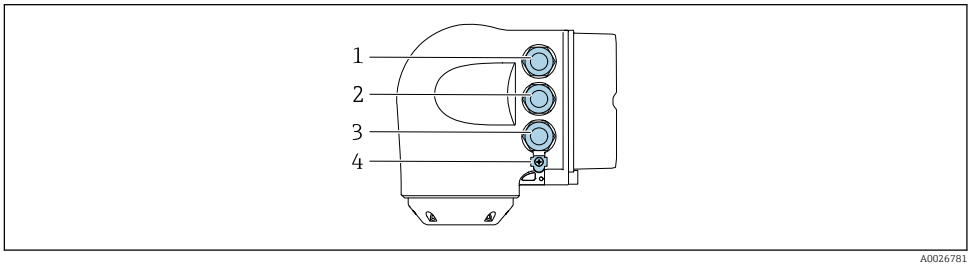

A0026781

1 Terminal connection for supply voltage
2 Terminal connection for signal transmission, input/output
3 Terminal connection for signal transmission, input/output or terminal connection for network connection via service interface (CDI-RJ45)
4 Protective earth (PE)

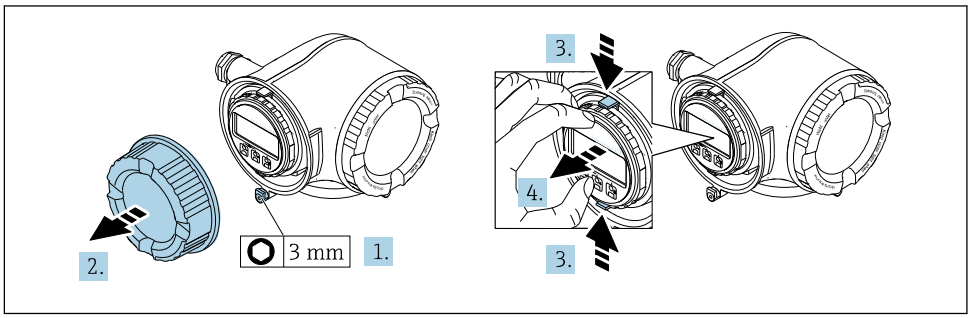

A0029813

1. Loosen the securing clamp of the connection compartment cover.
2. Unscrew the connection compartment cover.
3. Squeeze the tabs of the display module holder together.
4. Remove the display module holder.

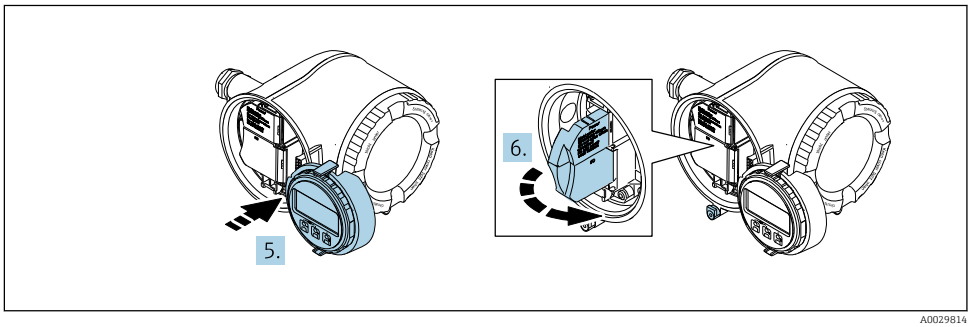

A0029814

5. Attach the holder to the edge of the electronics compartment.
6. Open the terminal cover.

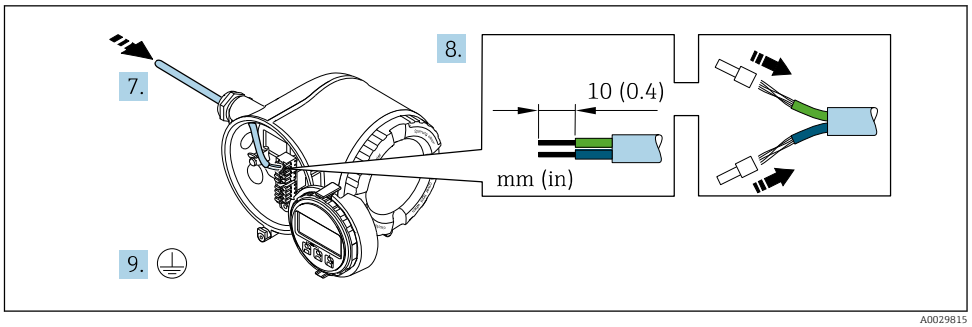

A0029815

7. Push the cable through the cable entry . To ensure tight sealing, do not remove the sealing ring from the cable entry.
8. Strip the cable and cable ends. In the case of stranded cables, also fit ferrules.
9. Connect the protective ground.

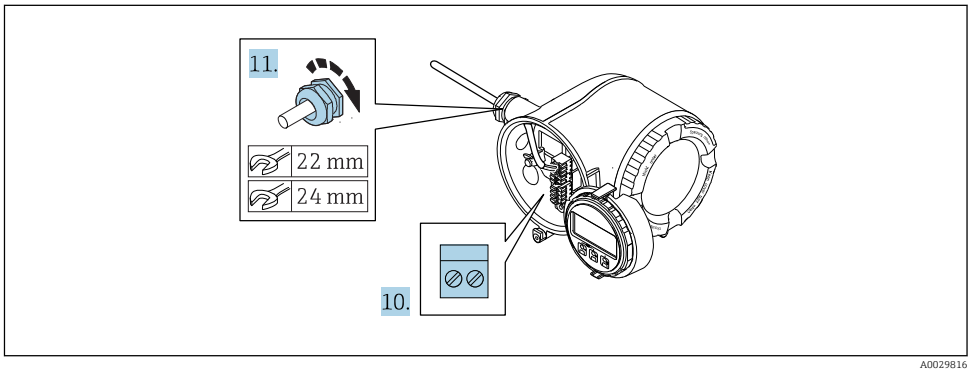

A0029816

10. Connect the cable in accordance with the terminal assignment .
    ↳ **Signal cable terminal assignment:** The device-specific terminal assignment is documented on an adhesive label in the terminal cover.
    Supply voltage terminal assignment: Adhesive label in the terminal cover or → 42.
11. Firmly tighten the cable glands.
    ↳ This concludes the cable connection process.
12. Close the terminal cover.
13. Fit the display module holder in the electronics compartment.
14. Screw on the connection compartment cover.
15. Secure the securing clamp of the connection compartment cover.

Removing a cable

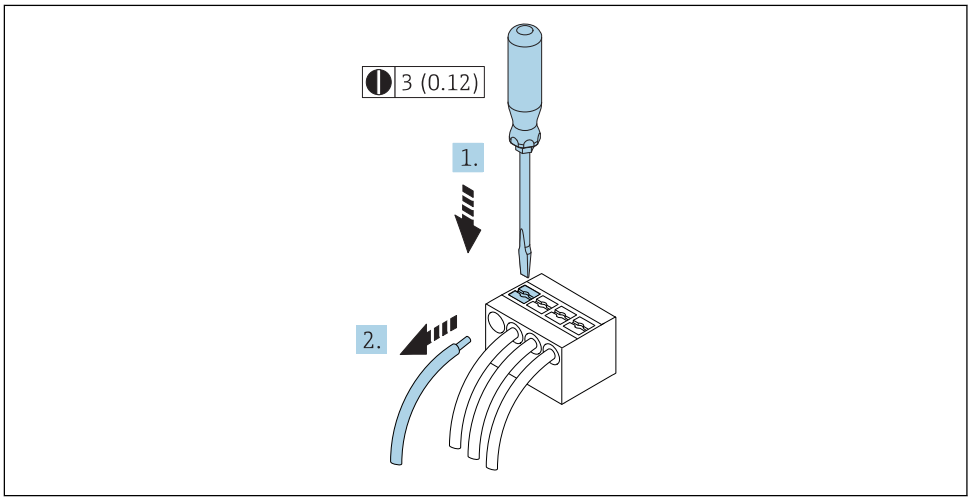

16 *Engineering unit mm (in)*

1. To remove a cable from the terminal, use a flat-blade screwdriver to push the slot between the two terminal holes
2. while simultaneously pulling the cable end out of the terminal.

7.4 Ensuring potential equalization

7.4.1 Requirements

CAUTION

Electrode damage can result in the complete failure of the device!

- Same electrical potential for the fluid and sensor
- Company-internal grounding concepts
- Pipe material and grounding

7.4.2 Connection example, standard scenario

Metal, grounded pipe

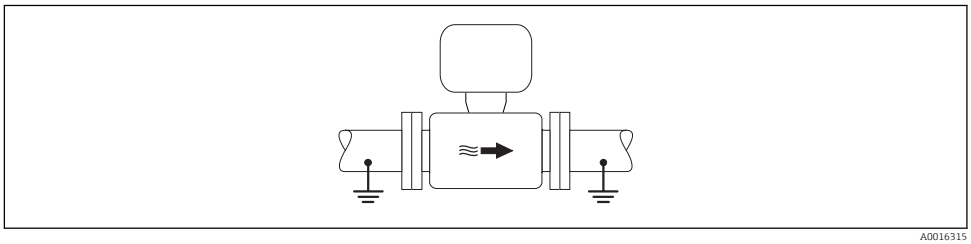

17 *Potential equalization via measuring tube*

7.4.3 Connection example in special situations

Unlined and ungrounded metal pipe

This connection method also applies in situations where:
- The customary potential equalization is not used
- Equalizing currents are present

Ground cable	Copper wire, at least 6 mm² (0.0093 in²)

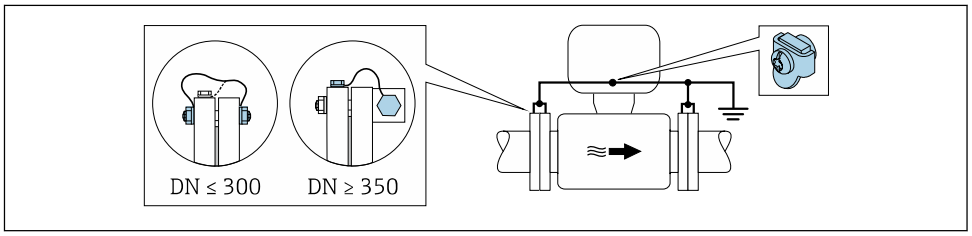

18 *Potential equalization via ground terminal and pipe flanges*

1. Connect both sensor flanges to the pipe flange via a ground cable and ground them.
2. If DN ≤ 300 (12"): Mount the ground cable directly on the conductive flange coating of the sensor with the flange screws.
3. If DN ≥ 350 (14"): Mount the ground cable directly on the metal transport bracket. Observe screw tightening torques: see the Sensor Brief Operating Instructions.
4. Connect the connection housing of the transmitter or sensor to ground potential by means of the ground terminal provided for the purpose.

Plastic pipe or pipe with insulating liner

This connection method also applies in situations where:
- The customary potential equalization is not used
- Equalizing currents are present

Ground cable	Copper wire, at least 6 mm² (0.0093 in²)

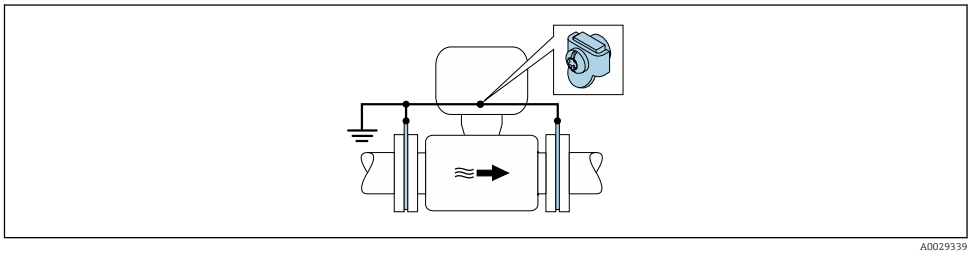

19 *Potential equalization via ground terminal and ground disks*

1. Connect the ground disks to the ground terminal via the ground cable.
2. Connect the ground disks to ground potential.

Pipe with a cathodic protection unit

This connection method is only used if the following two conditions are met:
- Metal pipe without liner or pipe with electrically conductive liner
- Cathodic protection is integrated in the personal protection equipment

Ground cable	Copper wire, at least 6 mm² (0.0093 in²)

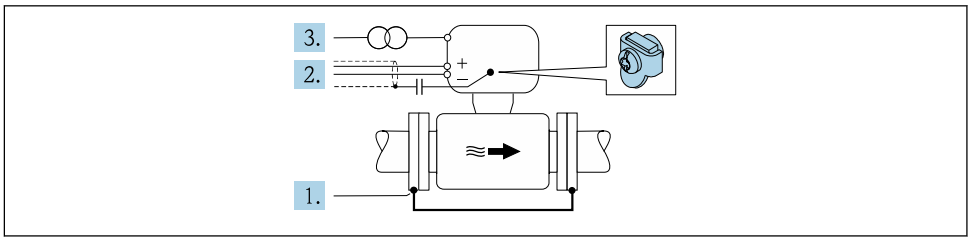

Prerequisite: The sensor is installed in the pipe in a way that provides electrical insulation.

1. Connect the two flanges of the pipe to one another via a ground cable.
2. Guide the shield of the signal lines through a capacitor.
3. Connect the measuring device to the power supply such that it is floating in relation to the protective ground (isolation transformer).

7.5 Special connection instructions

7.5.1 Connection examples

Current output 4 to 20 mA HART

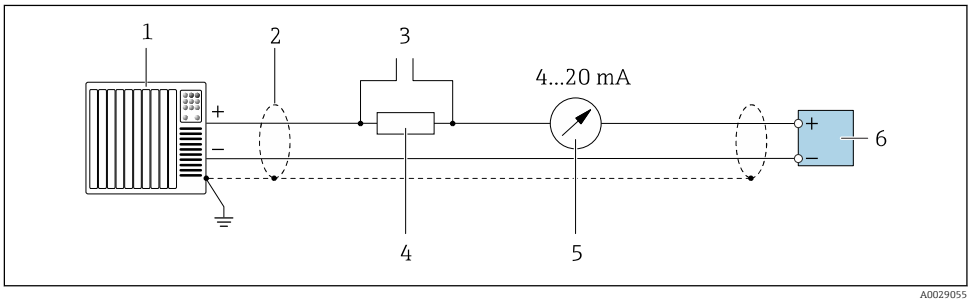

20 Connection example for 4 to 20 mA HART current output (active)

1 *Automation system with current input (e.g. PLC)*
2 *Cable shield provided at one end. The cable shield must be grounded at both ends to comply with EMC requirements; observe cable specifications*
3 *Connection for HART operating devices → 84*
4 *Resistor for HART communication (≥ 250 Ω): observe maximum load → 184*
5 *Analog display unit: observe maximum load → 184*
6 *Transmitter*

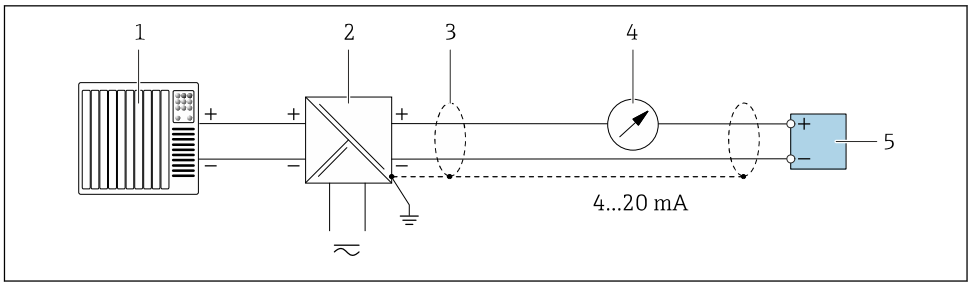

21 *Connection example for 4 to 20 mA HART current output (passive)*

1 *Automation system with current input (e.g. PLC)*
2 *Power supply*
3 *Cable shield provided at one end. The cable shield must be grounded at both ends to comply with EMC requirements; observe cable specifications*
4 *Analog display unit: observe maximum load → 184*
5 *Transmitter*

HART input

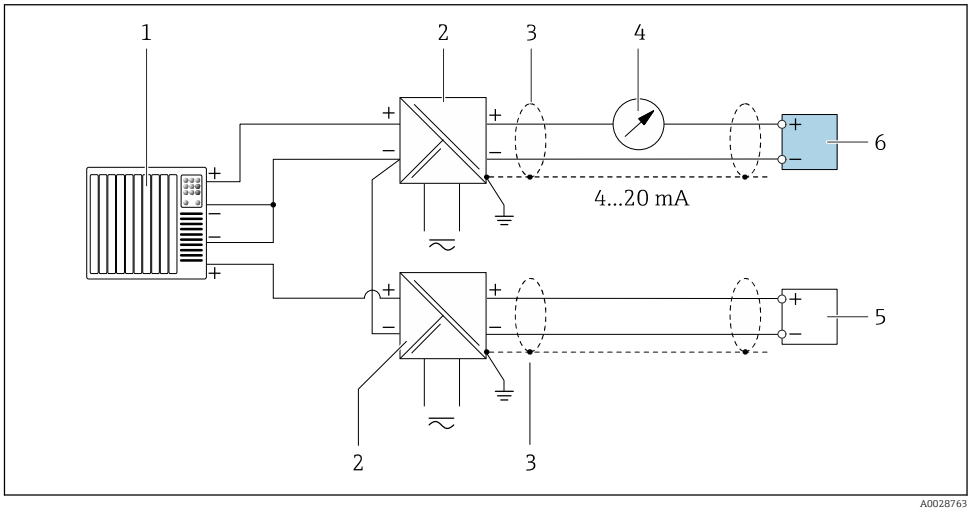

22 *Connection example for HART input with a common negative (passive)*

1 *Automation system with HART output (e.g. PLC)*
2 *Active barrier for power supply (e.g. RN221N)*
3 *Cable shield provided at one end. The cable shield must be grounded at both ends to comply with EMC requirements; observe cable specifications*
4 *Analog display unit: observe maximum load → 184*
5 *Pressure measuring device (e.g. Cerabar M, Cerabar S): see requirements*
6 *Transmitter*

Current output 4-20 mA

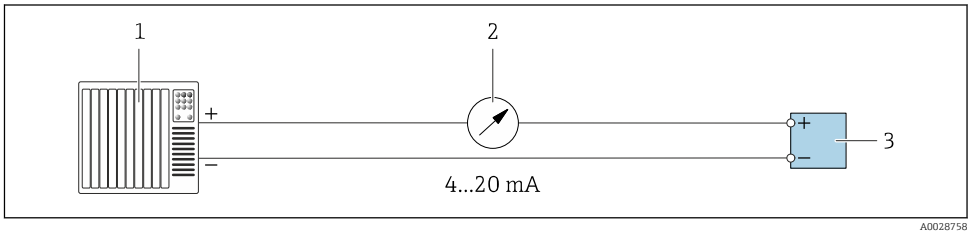

23 *Connection example for 4-20 mA current output (active)*

1 *Automation system with current input (e.g. PLC)*
2 *Analog display unit: observe maximum load → 184*
3 *Transmitter*

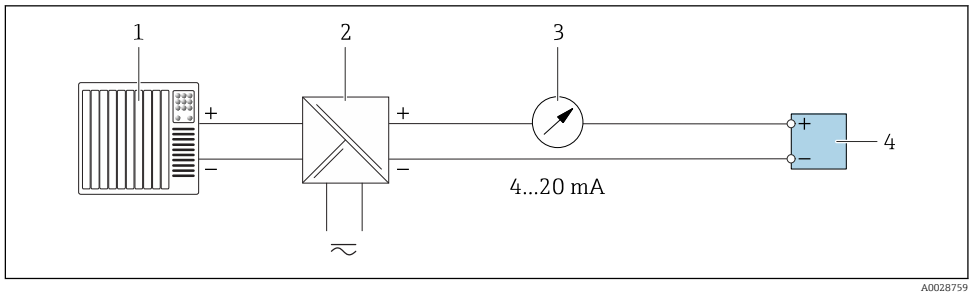

24 *Connection example for 4-20 mA current output (passive)*

1 *Automation system with current input (e.g. PLC)*
2 *Active barrier for power supply (e.g. RN221N)*
3 *Analog display unit: observe maximum load → 184*
4 *Transmitter*

Pulse/frequency output

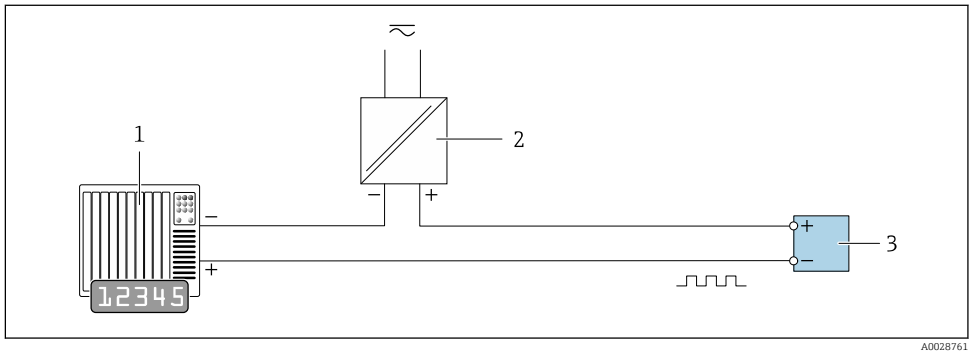

25 *Connection example for pulse/frequency output (passive)*

1 *Automation system with pulse/frequency input (e.g. PLC)*
2 *Power supply*
3 *Transmitter: Observe input values → 186*

Switch output

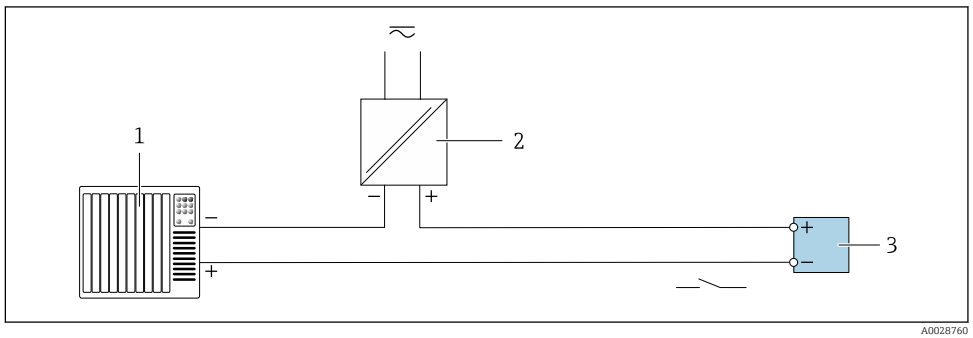

26 *Connection example for switch output (passive)*

1 *Automation system with switch input (e.g. PLC)*
2 *Power supply*
3 *Transmitter: Observe input values → 186*

Double pulse output

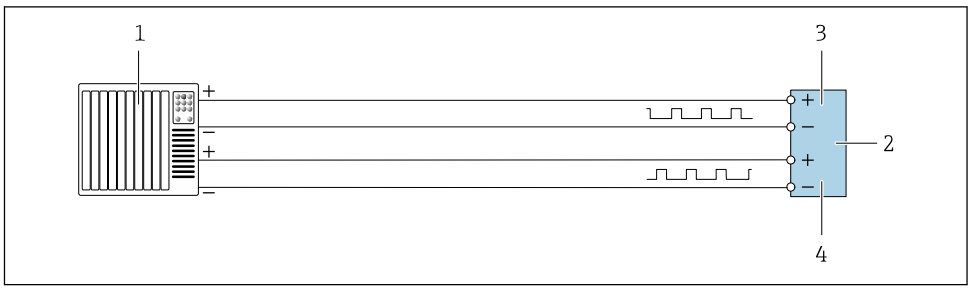

27 *Connection example for double pulse output (active)*

1 *Automation system with double pulse input (e.g. PLC)*
2 *Transmitter: Observe input values → 187*
3 *Double pulse output*
4 *Double pulse output (slave), phase-shifted*

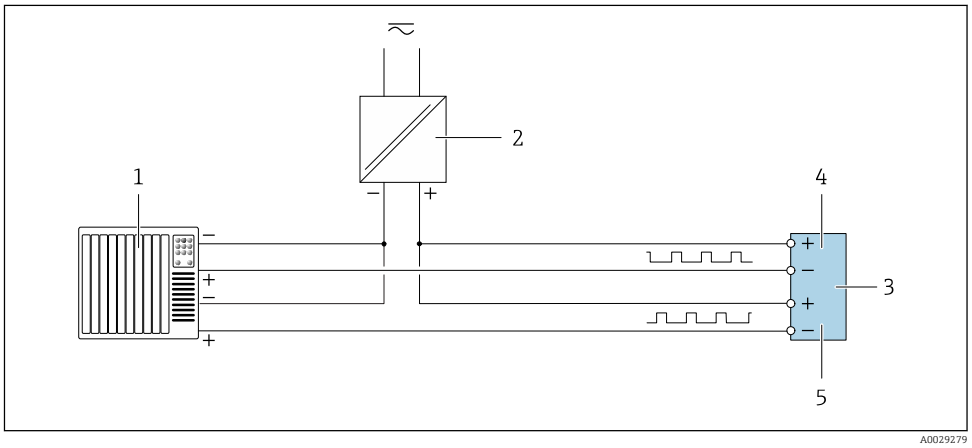

28 *Connection example for double pulse output (passive)*

1 *Automation system with double pulse input (e.g. PLC)*
2 *Power supply*
3 *Transmitter: Observe input values → 187*
4 *Double pulse output*
5 *Double pulse output (slave), phase-shifted*

Relay output

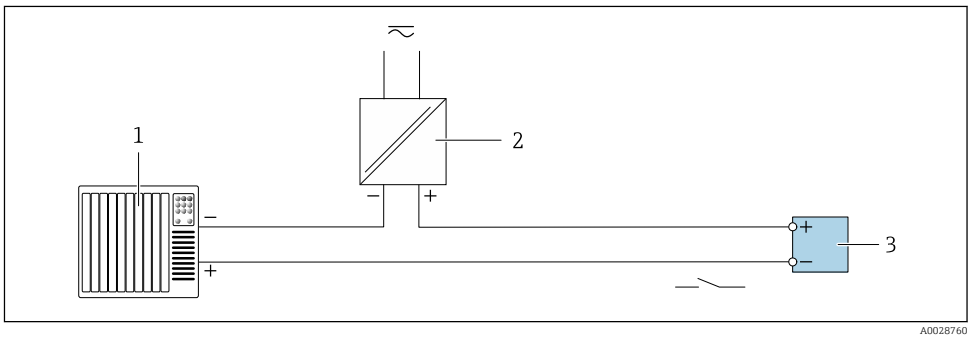

29 *Connection example for relay output (passive)*

1 *Automation system with relay input (e.g. PLC)*
2 *Power supply*
3 *Transmitter: Observe input values → 187*

Current input

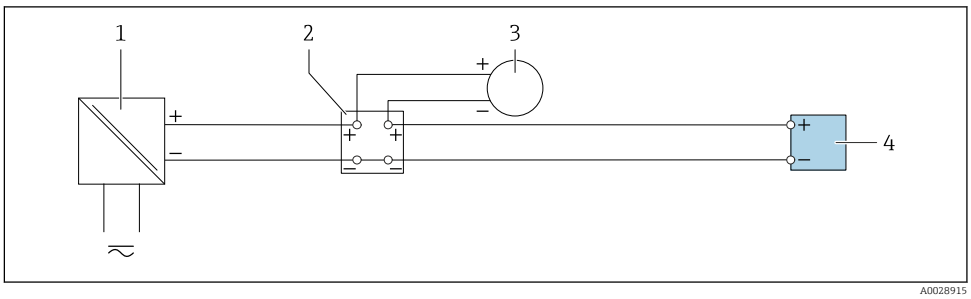

30 *Connection example for 4 to 20 mA current input*

1 *Power supply*
2 *Terminal box*
3 *External measuring device (to read in pressure or temperature, for instance)*
4 *Transmitter*

Status input

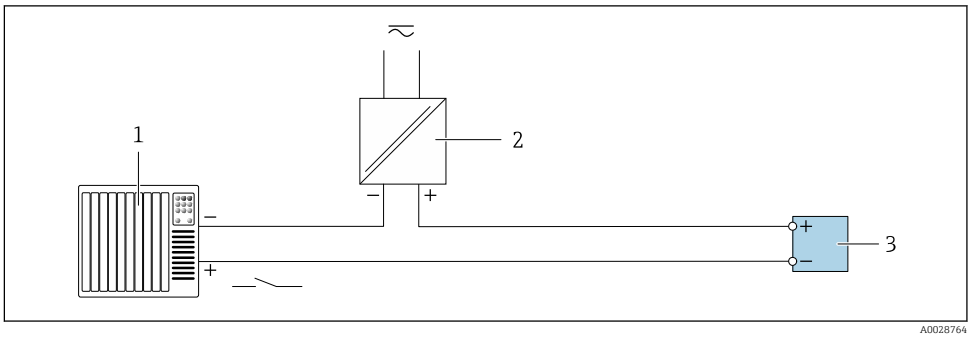

31 *Connection example for status input*

1 *Automation system with status output (e.g. PLC)*
2 *Power supply*
3 *Transmitter*

7.6 Ensuring the degree of protection

The measuring device fulfills all the requirements for the IP66/67 degree of protection, Type 4X enclosure.

To guarantee IP66/67 degree of protection, Type 4X enclosure, carry out the following steps after the electrical connection:

1. Check that the housing seals are clean and fitted correctly.
2. Dry, clean or replace the seals if necessary.
3. Tighten all housing screws and screw covers.
4. Firmly tighten the cable glands.

5. To ensure that moisture does not enter the cable entry:
   Route the cable so that it loops down before the cable entry ("water trap").
   ↳

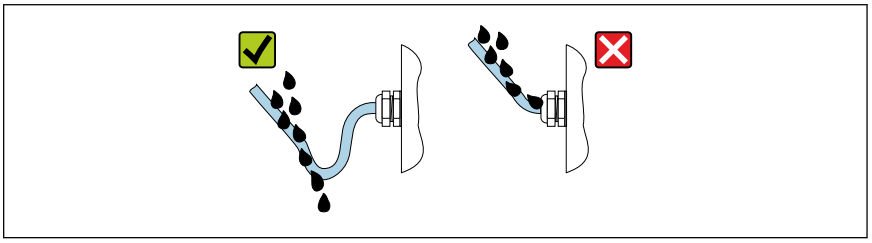

A0029278

6. Insert dummy plugs into unused cable entries.

7.7 Post-connection check

Are cables or the device undamaged (visual inspection)?	❑
Do the cables used meet the requirements?	❑
Do the cables have adequate strain relief?	❑
Are all the cable glands installed, firmly tightened and leak-tight? Cable run with "water trap" → 🖹 62?	❑
Is the potential equalization established correctly ?	❑

8 Operation options

8.1 Overview of operation options

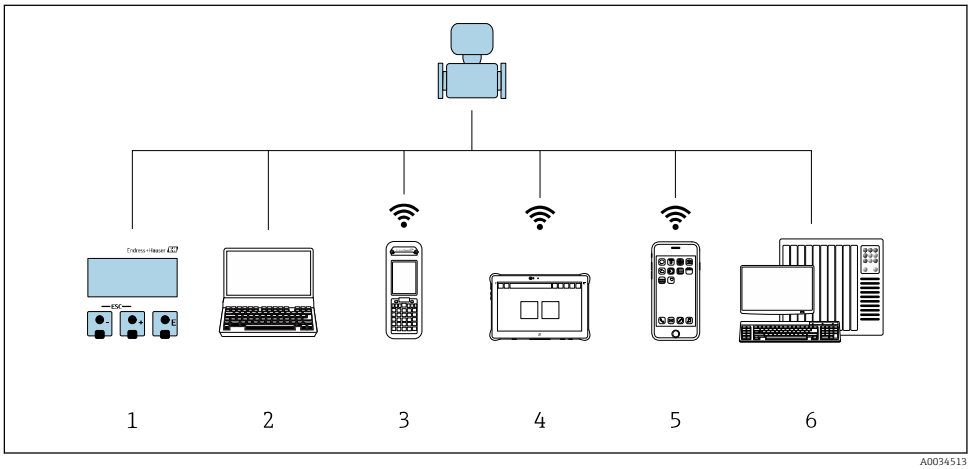

1 *Local operation via display module*
2 *Computer with Web browser (e.g. Internet Explorer) or with operating tool (e.g. FieldCare, DeviceCare, AMS Device Manager, SIMATIC PDM)*
3 *Field Xpert SFX350 or SFX370*
4 *Field Xpert SMT70*
5 *Mobile handheld terminal*
6 *Control system (e.g. PLC)*

8.2 Structure and function of the operating menu

8.2.1 Structure of the operating menu

For an overview of the operating menu for experts: "Description of Device Parameters" document supplied with the device→ 208

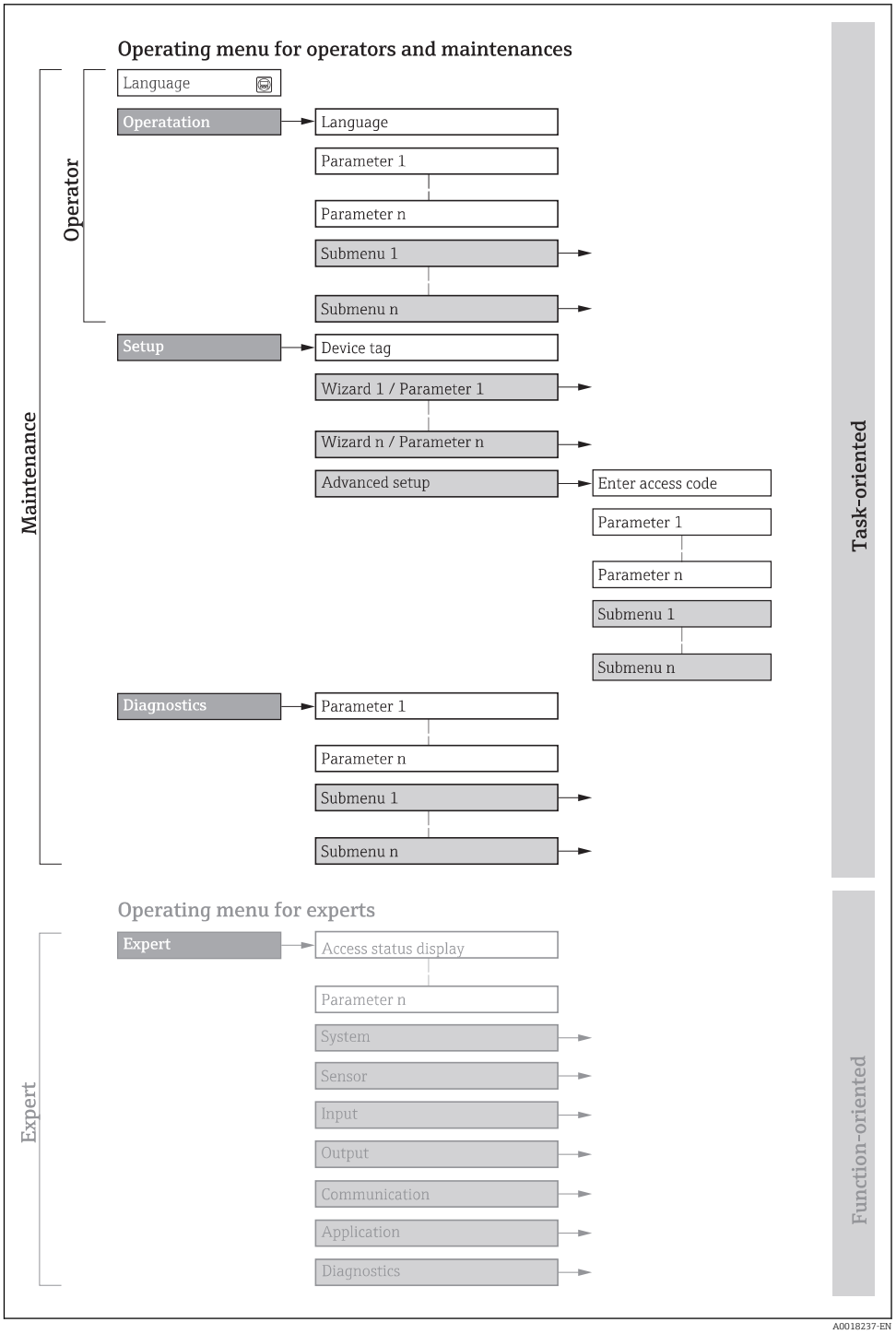

32 *Schematic structure of the operating menu*

8.2.2 Operating philosophy

The individual parts of the operating menu are assigned to certain user roles (operator, maintenance etc.). Each user role contains typical tasks within the device lifecycle.

Menu/parameter		User role and tasks	Content/meaning
Language	task-oriented	**Role "Operator", "Maintenance"** Tasks during operation: ▪ Configuring the operational display ▪ Reading measured values	▪ Defining the operating language ▪ Defining the Web server operating language ▪ Resetting and controlling totalizers
Operation			▪ Configuring the operational display (e.g. display format, display contrast) ▪ Resetting and controlling totalizers
Setup		**"Maintenance" role** Commissioning: ▪ Configuration of the measurement ▪ Configuration of the inputs and outputs ▪ Configuration of the communication interface	Wizards for fast commissioning: ▪ Setting the system units ▪ Displaying the I/O/configuration ▪ Configuring the inputs ▪ Configuring the outputs ▪ Configuration of the operational display ▪ Setting the low flow cut off ▪ Configuring empty pipe detection Advanced setup ▪ For more customized configuration of the measurement (adaptation to special measuring conditions) ▪ Configuration of totalizers ▪ Configuration of electrode cleaning (optional) ▪ Configuring the WLAN settings ▪ Administration (define access code, reset measuring device)
Diagnostics		**"Maintenance" role** Fault elimination: ▪ Diagnostics and elimination of process and device errors ▪ Measured value simulation	Contains all parameters for error detection and analyzing process and device errors: ▪ Diagnostic list Contains up to 5 currently pending diagnostic messages. ▪ Event logbook Contains event messages that have occurred. ▪ Device information Contains information for identifying the device. ▪ Measured values Contains all current measured values. ▪ **Data logging** submenu with "Extended HistoROM" order option Storage and visualization of measured values ▪ Heartbeat The functionality of the device is checked on demand and the verification results are documented. ▪ Simulation Is used to simulate measured values or output values.
Expert	function-oriented	Tasks that require detailed knowledge of the function of the device: ▪ Commissioning measurements under difficult conditions ▪ Optimal adaptation of the measurement to difficult conditions ▪ Detailed configuration of the communication interface ▪ Error diagnostics in difficult cases	Contains all the parameters of the device and makes it possible to access these parameters directly using an access code. The structure of this menu is based on the function blocks of the device: ▪ System Contains all higher-order device parameters which do not concern the measurement or the communication interface. ▪ Sensor Configuration of the measurement. ▪ Input Configuration of the status input. ▪ Output Configuration of the analog current outputs as well as the pulse/frequency and switch output. ▪ Communication Configuration of the digital communication interface and the Web server. ▪ Application Configuration of the functions that go beyond the actual measurement (e.g. totalizer). ▪ Diagnostics Error detection and analysis of process and device errors and for device simulation and Heartbeat Technology.

8.3 Access to the operating menu via the local display

8.3.1 Operational display

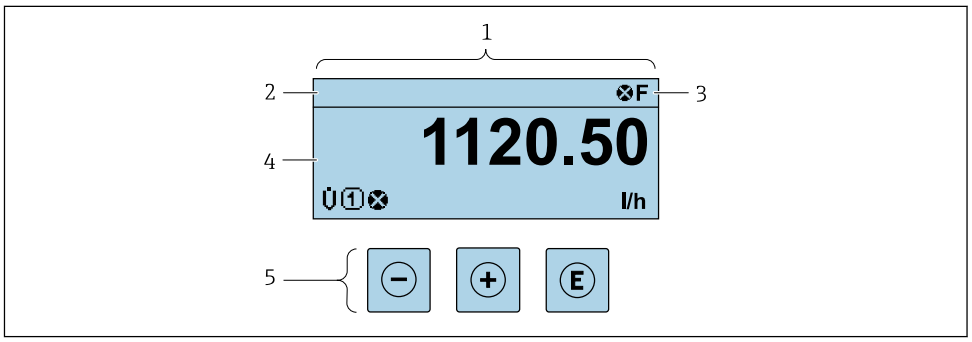

1 *Operational display*
2 *Device tag* → 🖹 97
3 *Status area*
4 *Display area for measured values (4-line)*
5 *Operating elements* → 🖹 72

Status area

The following symbols appear in the status area of the operational display at the top right:
- Status signals → 🖹 154
  - **F**: Failure
  - **C**: Function check
  - **S**: Out of specification
  - **M**: Maintenance required
- Diagnostic behavior → 🖹 155
  - ⊗: Alarm
  - ⚠: Warning
- 🔒: Locking (the device is locked via the hardware)
- ⇆: Communication (communication via remote operation is active)

Display area

In the display area, each measured value is prefaced by certain symbol types for further description:

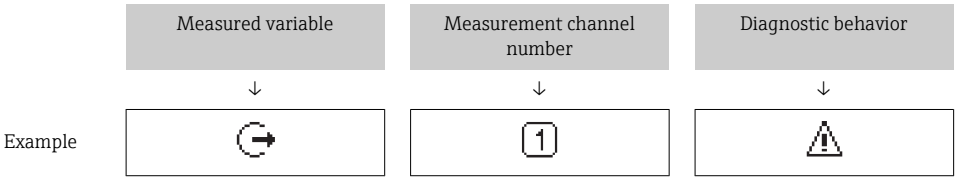

Appears only if a diagnostics event is present for this measured variable.

Measured values

Symbol	Meaning
U̇	Volume flow
G	Conductivity

	Mass flow
	Totalizer The measurement channel number indicates which of the three totalizers is displayed.
	Output The measurement channel number indicates which of the outputs is displayed.
	Status input

Measurement channel numbers

Symbol	Meaning
1 ... 4	Measurement channel 1 to 4
The measurement channel number is displayed only if more than one channel is present for the same measured variable type (e.g. Totalizer 1 to 3).	

Diagnostic behavior

The diagnostic behavior pertains to a diagnostic event that is relevant to the displayed measured variable. For information on the symbols → 155

The number and display format of the measured values can be configured via the **Format display** parameter (→ 112).

8.3.2 Navigation view

In the submenu	In the wizard
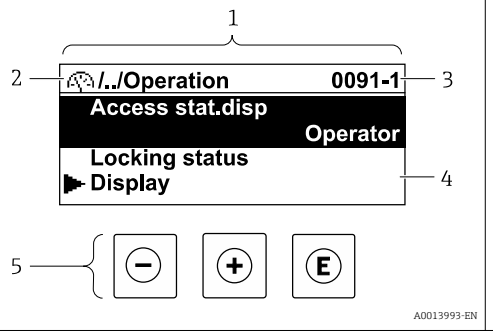	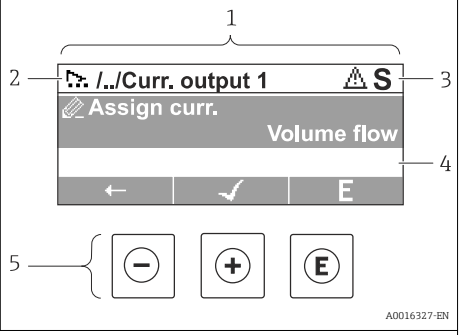

1 Navigation view
2 Navigation path to current position
3 Status area
4 Display area for navigation
5 Operating elements → 72

Navigation path

The navigation path - displayed at the top left in the navigation view - consists of the following elements:

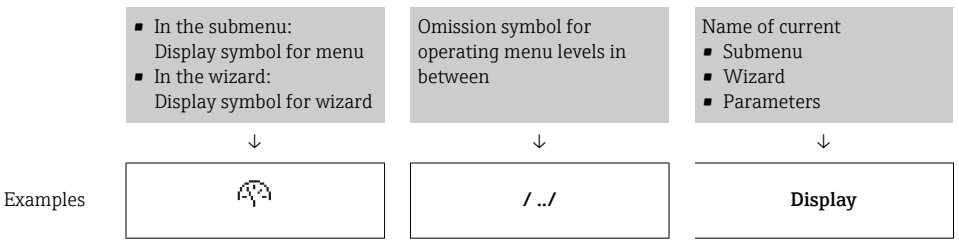

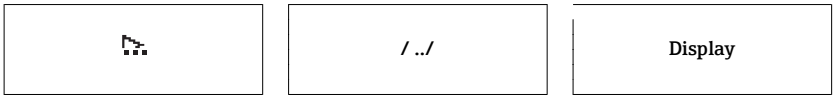

For more information about the icons in the menu, refer to the "Display area" section → 69

Status area

The following appears in the status area of the navigation view in the top right corner:
- In the submenu
  - The direct access code for the parameter you are navigating to (e.g. 0022-1)
  - If a diagnostic event is present, the diagnostic behavior and status signal
- In the wizard
  If a diagnostic event is present, the diagnostic behavior and status signal

- For information on the diagnostic behavior and status signal → 154
- For information on the function and entry of the direct access code → 74

Display area

Menus

Symbol	Meaning
	Operation Appears: ▪ In the menu next to the "Operation" selection ▪ At the left in the navigation path in the **Operation** menu
	Setup Appears: ▪ In the menu next to the "Setup" selection ▪ At the left in the navigation path in the **Setup** menu
	Diagnostics Appears: ▪ In the menu next to the "Diagnostics" selection ▪ At the left in the navigation path in the **Diagnostics** menu
	Expert Appears: ▪ In the menu next to the "Expert" selection ▪ At the left in the navigation path in the **Expert** menu

Submenus, wizards, parameters

Symbol	Meaning
	Submenu
	Wizard
	Parameters within a wizard No display symbol exists for parameters in submenus.

Locking

Symbol	Meaning
	Parameter locked When displayed in front of a parameter name, indicates that the parameter is locked. ▪ By a user-specific access code ▪ By the hardware write protection switch

Wizard operation

Symbol	Meaning
	Switches to the previous parameter.
	Confirms the parameter value and switches to the next parameter.
	Opens the editing view of the parameter.

8.3.3 Editing view

Numeric editor

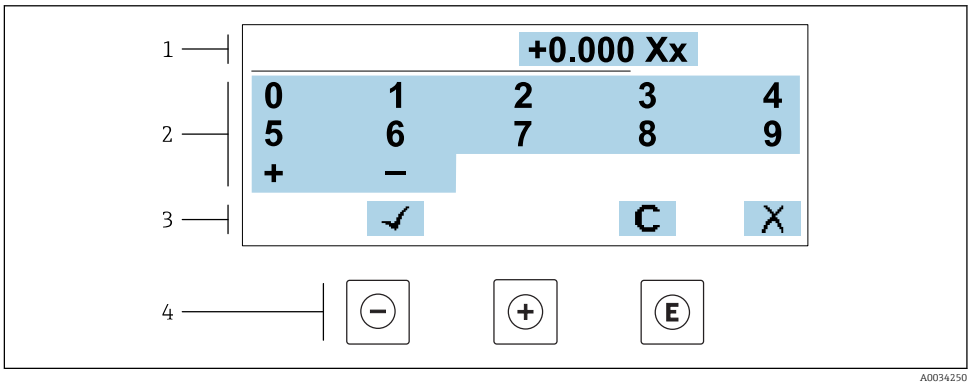

33 *For entering values in parameters (e.g. limit values)*

1 *Entry display area*
2 *Input screen*
3 *Confirm, delete or reject entry*
4 *Operating elements*

Text editor

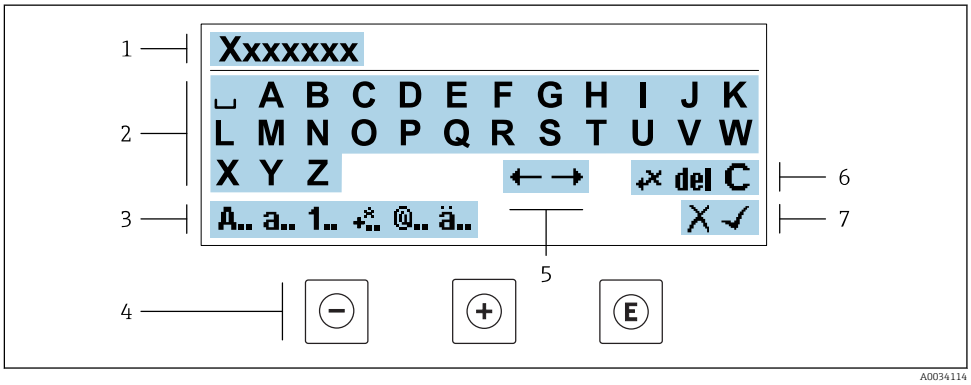

34 *For entering text in parameters (e.g. tag name)*

1 *Entry display area*
2 *Current input screen*
3 *Change input screen*
4 *Operating elements*
5 *Move entry position*
6 *Delete entry*
7 *Reject or confirm entry*

Using the operating elements in the editing view

Operating key(s)	Meaning
	**Minus key** Move the entry position to the left.
	**Plus key** Move the entry position to the right.
	**Enter key** ▪ Press the key briefly: confirm your selection. ▪ Press the key for 2 s: confirm the entry.
	**Escape key combination (press keys simultaneously)** Close the editing view without accepting the changes.

Input screens

Symbol	Meaning
	Upper case
	Lower case
	Numbers
	Punctuation marks and special characters: = + − * / ² ³ ¼ ½ ¾ ( ) [ ] < > { }
	Punctuation marks and special characters: ' " ` ^ . , ; : ? ! % µ ° € $ £ ¥ § @ # / \ I ~ & _
	Umlauts and accents

Controlling data entries

Symbol	Meaning
	Move entry position
	Reject entry
	Confirm entry
	Delete character immediately to the left of the entry position
	Delete character immediately to the right of the entry position
	Clear all the characters entered

8.3.4 Operating elements

Operating key(s)	Meaning
	**Minus key** *In a menu, submenu* Moves the selection bar upwards in a picklist. *With a Wizard* Confirms the parameter value and goes to the previous parameter. *With a text and numeric editor* Move the entry position to the left.
	**Plus key** *In a menu, submenu* Moves the selection bar downwards in a picklist. *With a Wizard* Confirms the parameter value and goes to the next parameter. *With a text and numeric editor* Move the entry position to the right.

	**Enter key**
	For operational display
	Pressing the key briefly opens the operating menu.
	In a menu, submenu
	▪ Pressing the key briefly:
	  ▪ Opens the selected menu, submenu or parameter.
	  ▪ Starts the wizard.
	  ▪ If help text is open, closes the help text of the parameter.
	▪ Pressing the key for 2 s for parameter:
	  If present, opens the help text for the function of the parameter.
	With a Wizard
	Opens the editing view of the parameter.
	With a text and numeric editor
	▪ Press the key briefly: confirm your selection.
	▪ Press the key for 2 s: confirm the entry.

	**Escape key combination (press keys simultaneously)**
	In a menu, submenu
	▪ Pressing the key briefly:
	  ▪ Exits the current menu level and takes you to the next higher level.
	  ▪ If help text is open, closes the help text of the parameter.
	▪ Pressing the key for 2 s returns you to the operational display ("home position").
	With a Wizard
	Exits the wizard and takes you to the next higher level.
	With a text and numeric editor
	Close the editing view without accepting the changes.

	**Minus/Enter key combination (press the keys simultaneously)**
	▪ If the keypad lock is active:
	  Press the key for 3 s: deactivate the keypad lock.
	▪ If the keypad lock is not active:
	  Press the key for 3 s: the context menu opens along with the option for activating the keypad lock.

8.3.5 Opening the context menu

Using the context menu, the user can call up the following menus quickly and directly from the operational display:

- Setup
- Data backup
- Simulation

Calling up and closing the context menu

The user is in the operational display.

1. Press the ⊖ and Ⓔ keys for longer than 3 seconds.
   ↳ The context menu opens.

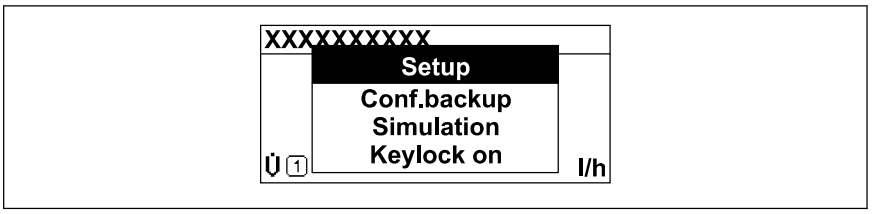

2. Press ⊖ + ⊕ simultaneously.
   ↳ The context menu is closed and the operational display appears.

Calling up the menu via the context menu

1. Open the context menu.
2. Press ⊕ to navigate to the desired menu.
3. Press Ⓔ to confirm the selection.
   ↳ The selected menu opens.

8.3.6 Navigating and selecting from list

Different operating elements are used to navigate through the operating menu. The navigation path is displayed on the left in the header. Icons are displayed in front of the individual menus. These icons are also shown in the header during navigation.

For an explanation of the navigation view with symbols and operating elements
→ 68

Example: Setting the number of displayed measured values to "2 values"

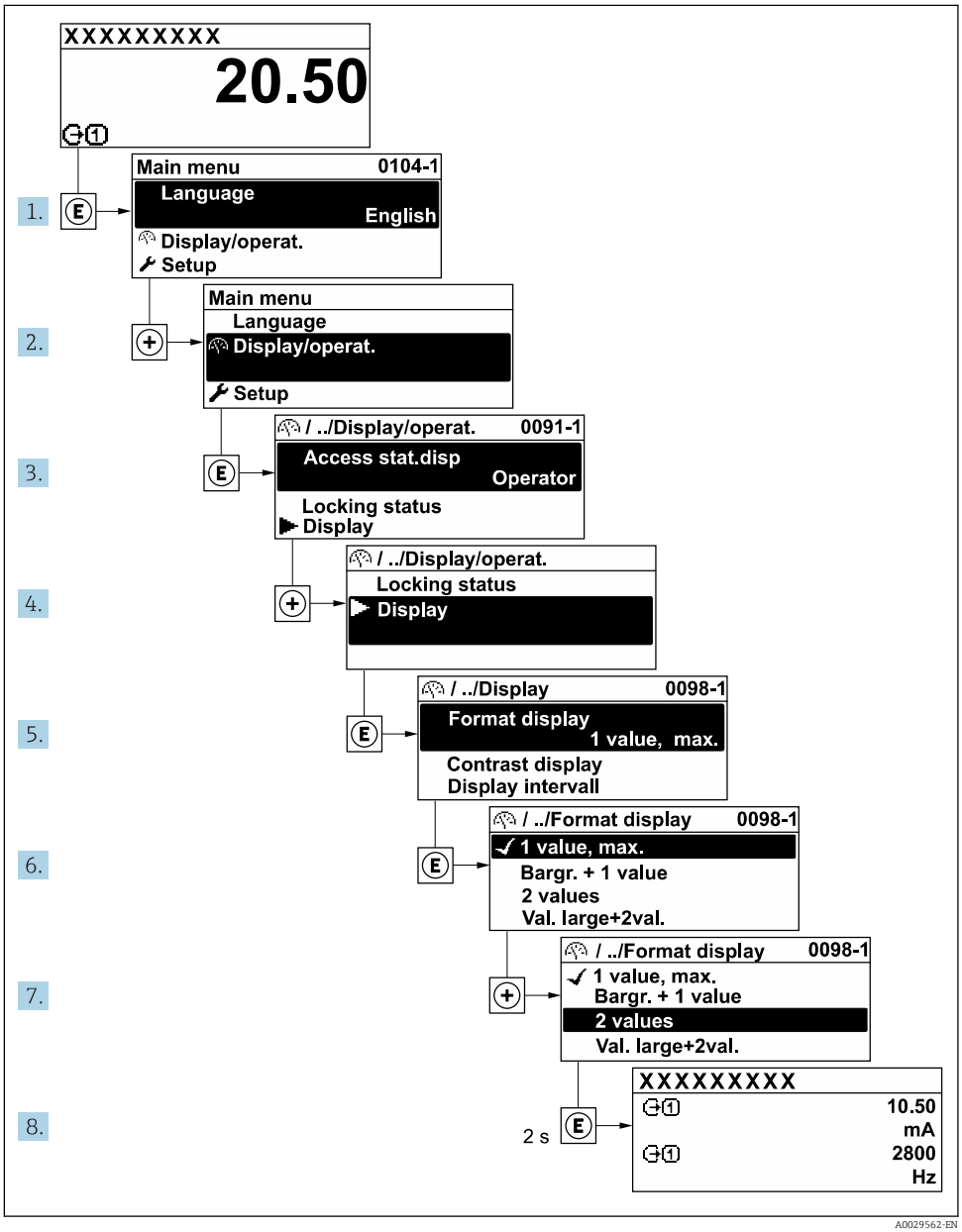

8.3.7 Calling the parameter directly

A parameter number is assigned to every parameter to be able to access a parameter directly via the onsite display. Entering this access code in the **Direct access** parameter calls up the desired parameter directly.

Navigation path
Expert → Direct access

The direct access code consists of a 5-digit number (at maximum) and the channel number, which identifies the channel of a process variable: e.g. 00914-2. In the navigation view, this appears on the right-hand side in the header of the selected parameter.

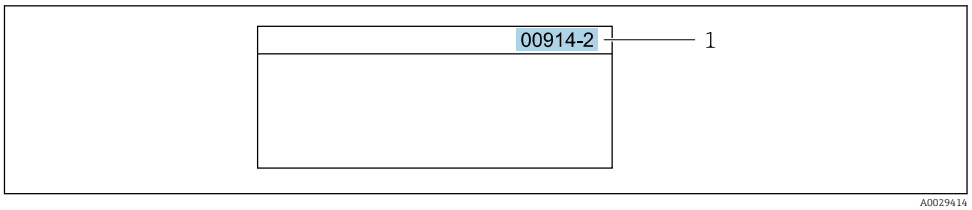

1 Direct access code

Note the following when entering the direct access code:
- The leading zeros in the direct access code do not have to be entered.
  Example: Enter **"914"** instead of **"00914"**
- If no channel number is entered, channel 1 is accessed automatically.
  Example: Enter **00914** → **Assign process variable** parameter
- If a different channel is accessed: Enter the direct access code with the corresponding channel number.
  Example: Enter **00914-2** → **Assign process variable** parameter

For the direct access codes of the individual parameters, see the "Description of Device Parameters" document for the device

8.3.8 Calling up help text

Help text is available for some parameters and can be called up from the navigation view. The help text provides a brief explanation of the parameter function and thereby supports swift and safe commissioning.

Calling up and closing the help text

The user is in the navigation view and the selection bar is on a parameter.

1. Press E for 2 s.
   ↳ The help text for the selected parameter opens.

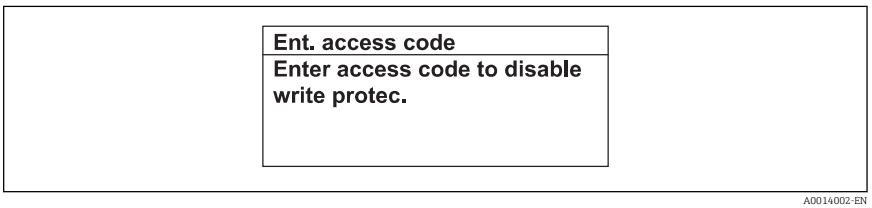

35 Example: Help text for parameter "Enter access code"

2. Press − + + simultaneously.
   ↳ The help text is closed.

8.3.9 Changing the parameters

Parameters can be changed via the numeric editor or text editor.
- Numeric editor: Change values in a parameter, e.g. specifications for limit values.
- Text editor: Enter text in a parameter, e.g. tag name.

A message is displayed if the value entered is outside the permitted value range.

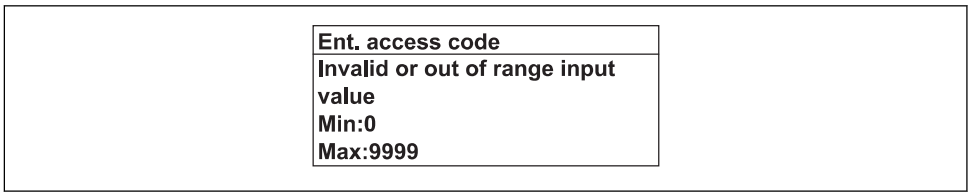

For a description of the editing view - consisting of the text editor and numeric editor - with symbols → 70, for a description of the operating elements → 72

8.3.10 User roles and related access authorization

The two user roles "Operator" and "Maintenance" have different write access to the parameters if the customer defines a user-specific access code. This protects the device configuration via the local display from unauthorized access → 134.

Defining access authorization for user roles

An access code is not yet defined when the device is delivered from the factory. Access authorization (read and write access) to the device is not restricted and corresponds to the "Maintenance" user role.

- Define the access code.
  - The "Operator" user role is redefined in addition to the "Maintenance" user role. Access authorization differs for the two user roles.

Access authorization to parameters: "Maintenance" user role

Access code status	Read access	Write access
An access code has not yet been defined (factory setting).	✔	✔
After an access code has been defined.	✔	✔ 1)

1) The user only has write access after entering the access code.

Access authorization to parameters: "Operator" user role

Access code status	Read access	Write access
After an access code has been defined.	✔	-- 1)

1) Despite the defined access code, certain parameters can always be modified and thus are excepted from the write protection, as they do not affect the measurement. Refer to the "Write protection via access code" section

The user role with which the user is currently logged on is indicated by the **Access status** parameter. Navigation path: Operation → Access status

8.3.11 Disabling write protection via access code

If the 🔒-symbol appears on the local display in front of a parameter, the parameter is write-protected by a user-specific access code and its value cannot be changed at the moment using local operation → 134.

Parameter write protection via local operation can be disabled by entering the user-specific access code in the **Enter access code** parameter (→ 121) via the respective access option.

1. After you press E, the input prompt for the access code appears.

2. Enter the access code.
   ↳ The 🔒-symbol in front of the parameters disappears; all previously write-protected parameters are now re-enabled.

8.3.12 Enabling and disabling the keypad lock

The keypad lock makes it possible to block access to the entire operating menu via local operation. As a result, it is no longer possible to navigate through the operating menu or change the values of individual parameters. Users can only read the measured values on the operational display.

The keypad lock is switched on and off via the context menu.

Switching on the keypad lock

The keypad lock is switched on automatically:
- If the device has not been operated via the display for > 1 minute.
- Each time the device is restarted.

To activate the keylock manually:

1. The device is in the measured value display.
   Press the ⊟ and Ⓔ keys for 3 seconds.
   ↳ A context menu appears.
2. In the context menu select the **Keylock on** option.
   ↳ The keypad lock is switched on.

If the user attempts to access the operating menu while the keypad lock is active, the **Keylock on** message appears.

Switching off the keypad lock

▶ The keypad lock is switched on.
Press the ⊟ and Ⓔ keys for 3 seconds.
↳ The keypad lock is switched off.

8.4 Access to the operating menu via the Web browser

8.4.1 Function range

Thanks to the integrated Web server, the device can be operated and configured via a Web browser and via a service interface (CDI-RJ45) or via a WLAN interface. The structure of the operating menu is the same as for the local display. In addition to the measured values, status information on the device is also displayed and allows the user to monitor the status of the device. Furthermore the device data can be managed and the network parameters can be configured.

A device that has a WLAN interface (can be ordered as an option) is required for the WLAN connection: order code for "Display; operation", option G "4-line, illuminated; touch control + WLAN". The device acts as an Access Point and enables communication by computer or a mobile handheld terminal.

For additional information on the Web server, refer to the Special Documentation for the device

8.4.2 Prerequisites

Computer hardware

Hardware	Interface	
	CDI-RJ45	WLAN
Interface	The computer must have an RJ45 interface.	The operating unit must have a WLAN interface.
Connection	Standard Ethernet cable with RJ45 connector.	Connection via Wireless LAN.
Screen	Recommended size: ≥12" (depends on the screen resolution)	

Computer software

Software	Interface	
	CDI-RJ45	WLAN

Recommended operating systems	▪ Microsoft Windows 7 or higher.
	▪ Mobile operating systems:
	  ▪ iOS
	  ▪ Android
	Microsoft Windows XP is supported.	

Web browsers supported	▪ Microsoft Internet Explorer 8 or higher ▪ Microsoft Edge ▪ Mozilla Firefox ▪ Google Chrome ▪ Safari	

Computer settings

Settings	Interface	
	CDI-RJ45	WLAN
User rights	Appropriate user rights (e.g. administrator rights) for TCP/IP and proxy server settings are necessary (for adjusting the IP address, subnet mask etc.).	
Proxy server settings of the Web browser	The Web browser setting *Use a Proxy Server for Your LAN* must be **deselected** .	
JavaScript	JavaScript must be enabled. If JavaScript cannot be enabled: enter http://192.168.1.212/basic.html in the address line of the Web browser. A fully functional but simplified version of the operating menu structure starts in the Web browser. When installing a new firmware version: To enable correct data display, clear the temporary memory (cache) of the Web browser under **Internet options**.	
Network connections	Only the active network connections to the measuring device should be used.	
	Switch off all other network connections such as WLAN.	Switch off all other network connections.

In the event of connection problems: → 149

Measuring device: Via CDI-RJ45 service interface

Device	CDI-RJ45 service interface
Measuring device	The measuring device has an RJ45 interface.
Web server	Web server must be enabled; factory setting: ON For information on enabling the Web server → 83

Measuring device: via WLAN interface

Device	WLAN interface
Measuring device	The measuring device has a WLAN antenna: ▪ Transmitter with integrated WLAN antenna ▪ Transmitter with external WLAN antenna
Web server	Web server and WLAN must be enabled; factory setting: ON For information on enabling the Web server → 83

8.4.3 Establishing a connection

Via service interface (CDI-RJ45)

Preparing the measuring device

Proline 500 – digital

1. Loosen the 4 fixing screws on the housing cover.
2. Open the housing cover.
3. The location of the connection socket depends on the measuring device and the communication protocol:
   Connect the computer to the RJ45 connector via the standard Ethernet connecting cable .

Proline 500

1. Depending on the housing version:
   Release the securing clamp or securing screw of the housing cover.
2. Depending on the housing version:
   Unscrew or open the housing cover.
3. The location of the connection socket depends on the measuring device and the communication protocol:
   Connect the computer to the RJ45 connector via the standard Ethernet connecting cable .

Configuring the Internet protocol of the computer

The following information refers to the default Ethernet settings of the device.

IP address of the device: 192.168.1.212 (factory setting)

1. Switch on the measuring device.
2. Connect to the computer using a cable → 85.
3. If a 2nd network card is not used, close all the applications on the notebook.
   ↳ Applications requiring Internet or a network, such as e-mail, SAP applications, Internet or Windows Explorer.
4. Close any open Internet browsers.
5. Configure the properties of the Internet protocol (TCP/IP) as defined in the table:

IP address	192.168.1.XXX; for XXX all numerical sequences except: 0, 212 and 255 → e.g. 192.168.1.213
Subnet mask	255.255.255.0
Default gateway	192.168.1.212 or leave cells empty

Via WLAN interface

Configuring the Internet protocol of the mobile terminal

NOTICE

If the WLAN connection is lost during the configuration, settings made may be lost.

- Make sure that the WLAN connection is not disconnected while configuring the device.

NOTICE

In principle, avoid simultaneous access to the measuring device via the service interface (CDI-RJ45) and the WLAN interface from the same mobile terminal. This could cause a network conflict.

- Only activate one service interface (CDI-RJ45 service interface or WLAN interface).
- If simultaneous communication is necessary: configure different IP address ranges, e.g. 192.168.0.1 (WLAN interface) and 192.168.1.212 (CDI-RJ45 service interface).

Preparing the mobile terminal

- Enable WLAN reception on the mobile terminal.

Establishing a connection from the mobile terminal to the measuring device

1. In the WLAN settings of the mobile terminal:
   Select the measuring device using the SSID (e.g. EH_Promag_500_A802000).
2. If necessary, select the WPA2 encryption method.
3. Enter the password: serial number of the measuring device ex-works (e.g. L100A802000).
   ↳ LED on display module flashes: it is now possible to operate the measuring device with the Web browser, FieldCare or DeviceCare.

The serial number can be found on the nameplate.

To ensure the safe and swift assignment of the WLAN network to the measuring point, it is advisable to change the SSID name. It should be possible to clearly assign the new SSID name to the measuring point (e.g. tag name) because it is displayed as the WLAN network.

Disconnecting

- After configuring the device:
  Terminate the WLAN connection between the operating unit and measuring device.

Starting the Web browser

1. Start the Web browser on the computer.

2. Enter the IP address of the Web server in the address line of the Web browser: 192.168.1.212
   ↳ The login page appears.

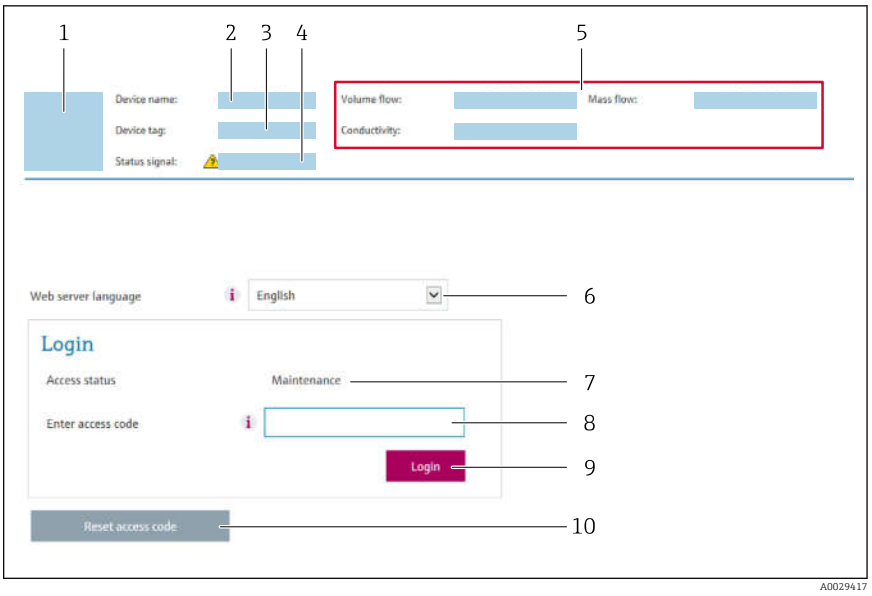

1 *Picture of device*
2 *Device name*
3 *Device tag (→ 97)*
4 *Status signal*
5 *Current measured values*
6 *Operating language*
7 *User role*
8 *Access code*
9 *Login*
10 *Reset access code (→ 131)*

If a login page does not appear, or if the page is incomplete → 149

8.4.4 Logging on

1. Select the preferred operating language for the Web browser.
2. Enter the user-specific access code.
3. Press **OK** to confirm your entry.

Access code	0000 (factory setting); can be changed by customer

If no action is performed for 10 minutes, the Web browser automatically returns to the login page.

8.4.5 User interface

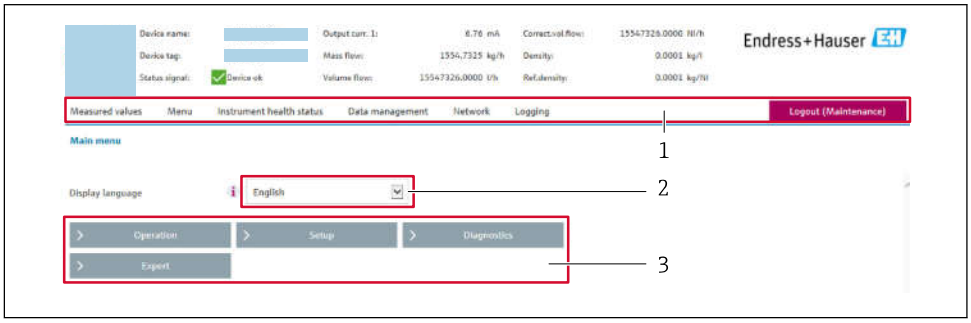

1 Function row
2 Local display language
3 Navigation area

Header

The following information appears in the header:
- Device name
- Device tag
- Device status with status signal → 157
- Current measured values

Function row

Functions	Meaning
Measured values	Displays the measured values of the measuring device
Menu	▪ Access to the operating menu from the measuring device ▪ The structure of the operating menu is the same as for the local display For detailed information on the structure of the operating menu, see the Operating Instructions for the measuring device
Device status	Displays the diagnostic messages currently pending, listed in order of priority

Data management	Data exchange between PC and measuring device:
	▪ Device configuration:
	  ▪ Load settings from the device (XML format, save configuration)
	  ▪ Save settings to the device (XML format, restore configuration)
	▪ Logbook - Export Event logbook (.csv file)
	▪ Documents - Export documents:
	  ▪ Export backup data record (.csv file, create documentation of the measuring point configuration)
	  ▪ Verification report (PDF file, only available with the "Heartbeat Verification" application package)
	▪ Firmware update - Flashing a firmware version

Network configuration	Configuration and checking of all the parameters required for establishing the connection to the measuring device: ▪ Network settings (e.g. IP address, MAC address) ▪ Device information (e.g. serial number, firmware version)
Logout	End the operation and call up the login page

Navigation area

If a function is selected in the function bar, the submenus of the function open in the navigation area. The user can now navigate through the menu structure.

Working area

Depending on the selected function and the related submenus, various actions can be performed in this area:
- Configuring parameters
- Reading measured values
- Calling up help text
- Starting an upload/download

8.4.6 Disabling the Web server

The Web server of the measuring device can be switched on and off as required using the **Web server functionality** parameter.

Navigation

"Expert" menu → Communication → Web server

Parameter overview with brief description

Parameter	Description	Selection	Factory setting
Web server functionality	Switch the Web server on and off.	▪ Off ▪ HTML Off ▪ On	On

Function scope of the "Web server functionality" parameter

Option	Description
Off	▪ The web server is completely disabled. ▪ Port 80 is locked.
On	▪ The complete functionality of the web server is available. ▪ JavaScript is used. ▪ The password is transferred in an encrypted state. ▪ Any change to the password is also transferred in an encrypted state.

Enabling the Web server

If the Web server is disabled it can only be re-enabled with the **Web server functionality** parameter via the following operating options:
- Via local display
- Via Bedientool "FieldCare"
- Via "DeviceCare" operating tool

8.4.7 Logging out

Before logging out, perform a data backup via the **Data management** function (upload configuration from device) if necessary.

1. Select the **Logout** entry in the function row.
   ↳ The home page with the Login box appears.
2. Close the Web browser.
3. If no longer needed:
   Reset modified properties of the Internet protocol (TCP/IP) → 79.

8.5 Access to the operating menu via the operating tool

The structure of the operating menu in the operating tools is the same as for operation via the local display.

8.5.1 Connecting the operating tool

Via HART protocol

This communication interface is available in device versions with a HART output.

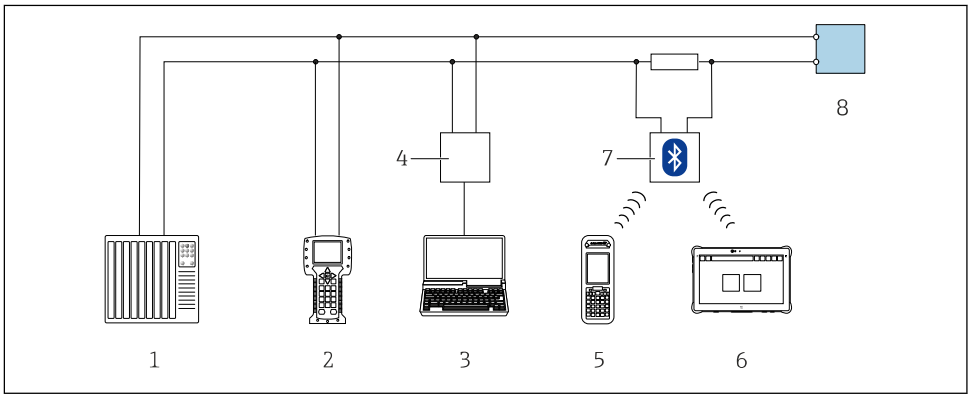

36 *Options for remote operation via HART protocol (active)*

1 *Control system (e.g. PLC)*
2 *Field Communicator 475*
3 *Computer with Web browser (e.g. Internet Explorer) for access to the integrated device Web server or computer with an operating tool (e.g. FieldCare, DeviceCare, AMS Device Manager, SIMATIC PDM) with COM DTM "CDI Communication TCP/IP"*
4 *Commubox FXA195 (USB)*
5 *Field Xpert SFX350 or SFX370*
6 *Field Xpert SMT70*
7 *VIATOR Bluetooth modem with connecting cable*
8 *Transmitter*

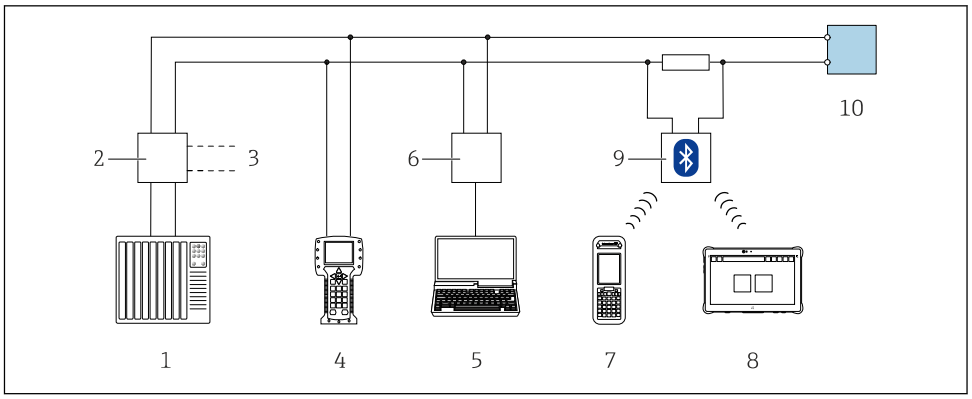

37 *Options for remote operation via HART protocol (passive)*

1 *Control system (e.g. PLC)*
2 *Transmitter power supply unit, e.g. RN221N (with communication resistor)*
3 *Connection for Commubox FXA195 and Field Communicator 475*
4 *Field Communicator 475*
5 *Computer with Web browser (e.g. Internet Explorer) for access to the integrated device Web server or computer with an operating tool (e.g. FieldCare, DeviceCare, AMS Device Manager, SIMATIC PDM) with COM DTM "CDI Communication TCP/IP"*
6 *Commubox FXA195 (USB)*
7 *Field Xpert SFX350 or SFX370*
8 *Field Xpert SMT70*
9 *VIATOR Bluetooth modem with connecting cable*
10 *Transmitter*

Service interface

Via service interface (CDI-RJ45)

A point-to-point connection can be established to configure the device onsite. With the housing open, the connection is established directly via the service interface (CDI-RJ45) of the device.

An adapter for RJ45 and the M12 connector is optionally available:
Order code for "Accessories", option **NB**: "Adapter RJ45 M12 (service interface)"

The adapter connects the service interface (CDI-RJ45) to an M12 connector mounted in the cable entry. Therefore the connection to the service interface can be established via an M12 connector without opening the device.

Proline 500 – digital transmitter

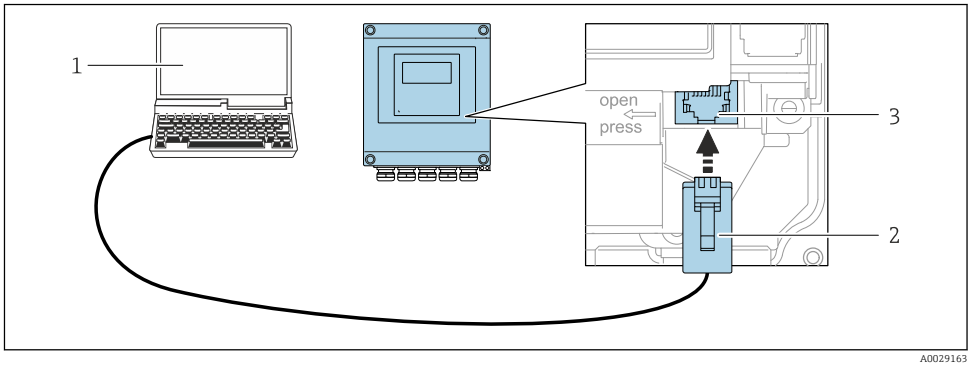

38 *Connection via service interface (CDI-RJ45)*

1 *Computer with Web browser (e.g. Microsoft Internet Explorer, Microsoft Edge) for accessing the integrated device Web server or with "FieldCare", "DeviceCare" operating tool with COM DTM "CDI Communication TCP/IP"*
2 *Standard Ethernet connecting cable with RJ45 connector*
3 *Service interface (CDI-RJ45) of the measuring device with access to the integrated Web server*

Proline 500 transmitter

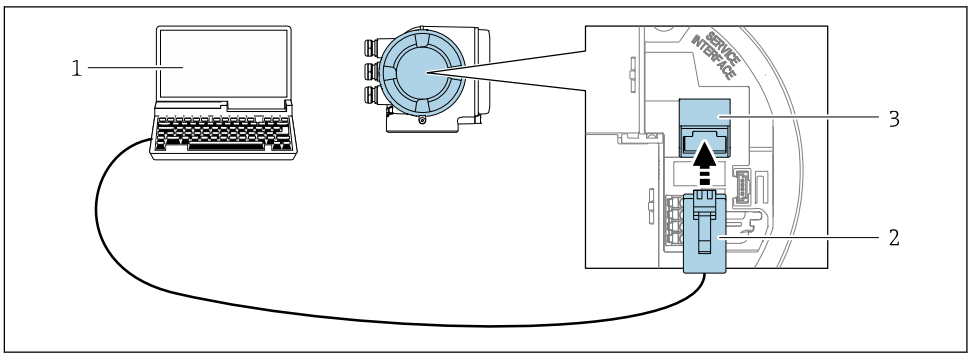

39 Connection via service interface (CDI-RJ45)

1 Computer with Web browser (e.g. Microsoft Internet Explorer, Microsoft Edge) for accessing the integrated device Web server or with "FieldCare", "DeviceCare" operating tool with COM DTM "CDI Communication TCP/IP"
2 Standard Ethernet connecting cable with RJ45 connector
3 Service interface (CDI-RJ45) of the measuring device with access to the integrated Web server

Via WLAN interface

The optional WLAN interface is available on the following device version:
Order code for "Display; operation", option G "4-line, illuminated; touch control + WLAN"

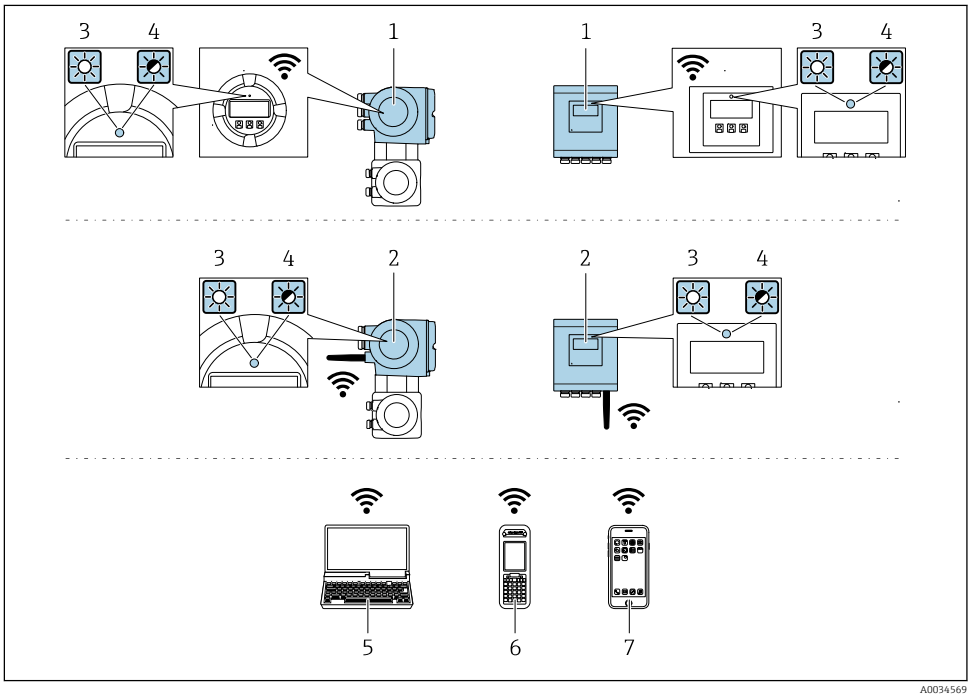

1 Transmitter with integrated WLAN antenna
2 Transmitter with external WLAN antenna
3 LED lit constantly: WLAN reception is enabled on measuring device
4 LED flashing: WLAN connection established between operating unit and measuring device
5 Computer with WLAN interface and Web browser (e.g. Microsoft Internet Explorer, Microsoft Edge) for accessing the integrated device Web server or with operating tool (e.g. FieldCare, DeviceCare)
6 Mobile handheld terminal with WLAN interface and Web browser (e.g. Microsoft Internet Explorer, Microsoft Edge) for accessing the integrated device Web server or operating tool (e.g. FieldCare, DeviceCare)
7 Smart phone or tablet (e.g. Field Xpert SMT70)

Function	WLAN: IEEE 802.11 b/g (2.4 GHz)
Encryption	WPA2-PSK AES-128 (in accordance with IEEE 802.11i)
Configurable WLAN channels	1 to 11
Degree of protection	IP67
Available antennas	▪ Internal antenna ▪ External antenna (optional) In the event of poor transmission/reception conditions at the place of installation. Only one antenna active in each case!
Range	▪ Internal antenna: typically 10 m (32 ft) ▪ External antenna: typically 50 m (164 ft)
Materials (external antenna)	▪ Antenna: ASA plastic (acrylic ester-styrene-acrylonitrile) and nickel-plated brass ▪ Adapter: Stainless steel and nickel-plated brass ▪ Cable: Polyethylene ▪ Connector: Nickel-plated brass ▪ Angle bracket: Stainless steel

Configuring the Internet protocol of the mobile terminal

NOTICE

If the WLAN connection is lost during the configuration, settings made may be lost.

► Make sure that the WLAN connection is not disconnected while configuring the device.

NOTICE

In principle, avoid simultaneous access to the measuring device via the service interface (CDI-RJ45) and the WLAN interface from the same mobile terminal. This could cause a network conflict.

► Only activate one service interface (CDI-RJ45 service interface or WLAN interface).
► If simultaneous communication is necessary: configure different IP address ranges, e.g. 192.168.0.1 (WLAN interface) and 192.168.1.212 (CDI-RJ45 service interface).

Preparing the mobile terminal

► Enable WLAN reception on the mobile terminal.

Establishing a connection from the mobile terminal to the measuring device

1. In the WLAN settings of the mobile terminal:
   Select the measuring device using the SSID (e.g. EH_Promag_500_A802000).
2. If necessary, select the WPA2 encryption method.
3. Enter the password: serial number of the measuring device ex-works (e.g. L100A802000).
   ↳ LED on display module flashes: it is now possible to operate the measuring device with the Web browser, FieldCare or DeviceCare.

The serial number can be found on the nameplate.

To ensure the safe and swift assignment of the WLAN network to the measuring point, it is advisable to change the SSID name. It should be possible to clearly assign the new SSID name to the measuring point (e.g. tag name) because it is displayed as the WLAN network.

Disconnecting

► After configuring the device:
Terminate the WLAN connection between the operating unit and measuring device.

8.5.2 Field Xpert SFX350, SFX370

Function range

Field Xpert SFX350 and Field Xpert SFX370 are mobile computers for commissioning and maintenance. They enable efficient device configuration and diagnostics for HART and FOUNDATION Fieldbus devices in the **non-hazardous area** (SFX350, SFX370) and **hazardous area** (SFX370).

For details, see Operating Instructions BA01202S

Source for device description files

See information → 91

8.5.3 FieldCare

Function scope

FDT-based plant asset management tool from Endress+Hauser. It can configure all smart field devices in a system and helps you manage them. By using the status information, it is also a simple but effective way of checking their status and condition.

Access is via:
- HART protocol
- CDI-RJ45 service interface → 85
- WLAN interface→ 86

Typical functions:
- Configuring parameters of transmitters
- Loading and saving device data (upload/download)
- Documentation of the measuring point
- Visualization of the measured value memory (line recorder) and event logbook

For additional information about FieldCare, see Operating Instructions BA00027S and BA00059S

Source for device description files

See information → 91

Establishing a connection

1. Start FieldCare and launch the project.
2. In the network: Add a device.
   ↳ The **Add device** window opens.
3. Select the **CDI Communication TCP/IP** option from the list and press **OK** to confirm.
4. Right-click **CDI Communication TCP/IP** and select the **Add device** option in the context menu that opens.
5. Select the desired device from the list and press **OK** to confirm.
   ↳ The **CDI Communication TCP/IP (Configuration)** window opens.
6. Enter the device address in the **IP address** field: 192.168.1.212 and press **Enter** to confirm.
7. Establish the online connection to the device.

For additional information, see Operating Instructions BA00027S and BA00059S

User interface

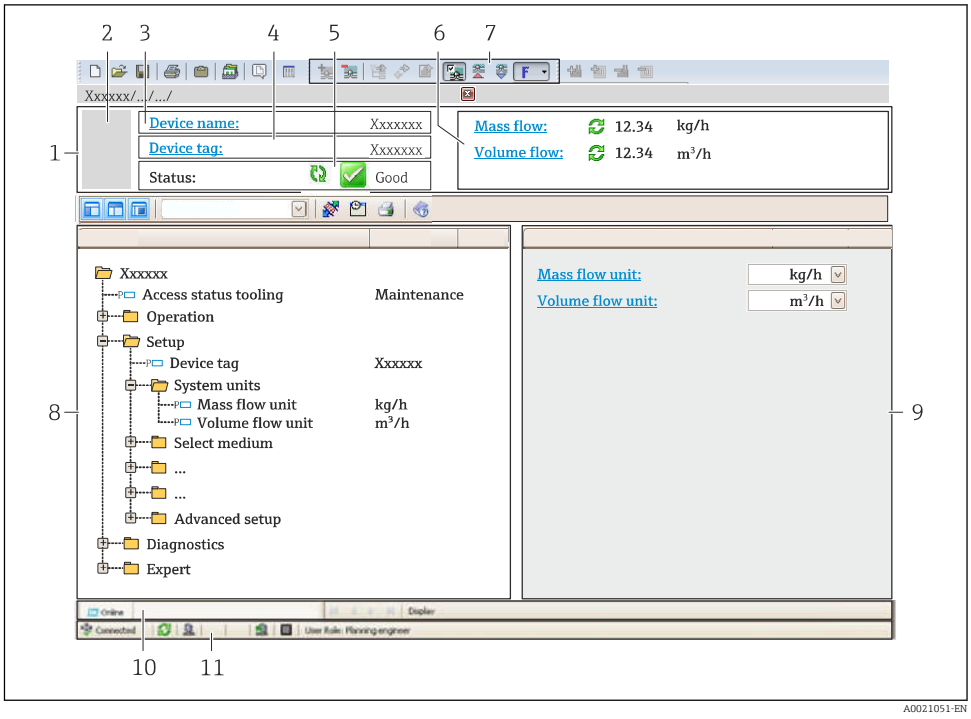

1 *Header*
2 *Picture of device*
3 *Device name*
4 *Device tag*
5 *Status area with status signal→ 157*
6 *Display area for current measured values*
7 *Edit toolbar with additional functions such as save/restore, event list and create documentation*
8 *Navigation area with operating menu structure*
9 *Working area*
10 *Range of action*
11 *Status area*

8.5.4 DeviceCare

Function scope

Tool to connect and configure Endress+Hauser field devices.

The fastest way to configure Endress+Hauser field devices is with the dedicated "DeviceCare" tool. Together with the device type managers (DTMs) it presents a convenient, comprehensive solution.

For details, see Innovation Brochure IN01047S

Source for device description files

See information → 91

8.5.5 AMS Device Manager

Function scope

Program from Emerson Process Management for operating and configuring measuring devices via HART protocol.

Source for device description files

See data → 91

8.5.6 SIMATIC PDM

Function scope

SIMATIC PDM is a standardized, manufacturer-independent program from Siemens for the operation, configuration, maintenance and diagnosis of intelligent field devices via HART protocol.

Source for device description files

See data → 91

8.5.7 Field Communicator 475

Function scope

Industrial handheld terminal from Emerson Process Management for remote configuration and measured value display via HART protocol.

Source for device description files

See data → 91

9 System integration

9.1 Overview of device description files

9.1.1 Current version data for the device

Firmware version	01.05.zz	▪ On the title page of the Operating Instructions ▪ On the transmitter nameplate ▪ Firmware version Diagnostics → Device information → Firmware version
Release date of firmware version	08.2019	---
Manufacturer ID	0x11	Manufacturer ID Diagnostics → Device information → Manufacturer ID
Device type ID	0x3C	Device type Diagnostics → Device information → Device type
HART protocol revision	7	HART revision Expert → Communication → HART output → Information → HART revision
Device revision	1	▪ On the transmitter nameplate ▪ Device revision Diagnostics → Device information → Device revision

For an overview of the different firmware versions for the device → 171

9.1.2 Operating tools

The suitable device description file for the individual operating tools is listed in the table below, along with information on where the file can be acquired.

Operating tool via HART protocol	Sources for obtaining device descriptions
FieldCare	▪ www.endress.com → Download Area ▪ CD-ROM (contact Endress+Hauser) ▪ DVD (contact Endress+Hauser)
DeviceCare	▪ www.endress.com → Download Area ▪ CD-ROM (contact Endress+Hauser) ▪ DVD (contact Endress+Hauser)
▪ Field Xpert SFX350 ▪ Field Xpert SFX370	Use update function of handheld terminal
AMS Device Manager (Emerson Process Management)	www.endress.com → Download Area
SIMATIC PDM (Siemens)	www.endress.com → Download Area
Field Communicator 475 (Emerson Process Management)	Use update function of handheld terminal

9.2 Measured variables via HART protocol

The following measured variables (HART device variables) are assigned to the dynamic variables at the factory:

Dynamic variables	Measured values (HART device variables)
Primary dynamic variable (PV)	Volume flow
Secondary dynamic variable (SV)	Totalizer 1
Tertiary dynamic variable (TV)	Totalizer 2
Quaternary dynamic variable (QV)	Totalizer 3

The assignment of the measured variables to the dynamic variables can be modified and assigned as desired via local operation and the operating tool using the following parameters:

- Expert → Communication → HART output → Output → Assign PV
- Expert → Communication → HART output → Output → Assign SV
- Expert → Communication → HART output → Output → Assign TV
- Expert → Communication → HART output → Output → Assign QV

The following measured variables can be assigned to the dynamic variables:

Measured variables for PV (primary dynamic variable)
- Off
- Volume flow
- Mass flow
- Corrected volume flow
- Flow velocity
- Conductivity [1)]
- Electronic temperature

Measured variables for SV, TV, QV (secondary, tertiary and quaternary dynamic variable)
- Volume flow
- Mass flow
- Corrected volume flow
- Flow velocity
- Conductivity [2)]
- Electronic temperature
- Totalizer 1
- Totalizer 2
- Totalizer 3

The range of options increases if the measuring device has one or more application packages.

Device variables
The device variables are permanently assigned. A maximum of 8 device variables can be transmitted:
- 0 = volume flow
- 1 = mass flow
- 2 = corrected volume flow
- 3 = flow velocity
- 4 = conductivity
- 7 = electronic temperature
- 8 = totalizer 1
- 9 = totalizer 2
- 10 = totalizer 3

1) Visibility depends on order options or device settings
2) Visibility depends on order options or device settings

9.3 Other settings

Burst mode functionality in accordance with HART 7 Specification:

Navigation
"Expert" menu → Communication → HART output → Burst configuration → Burst configuration 1 to n

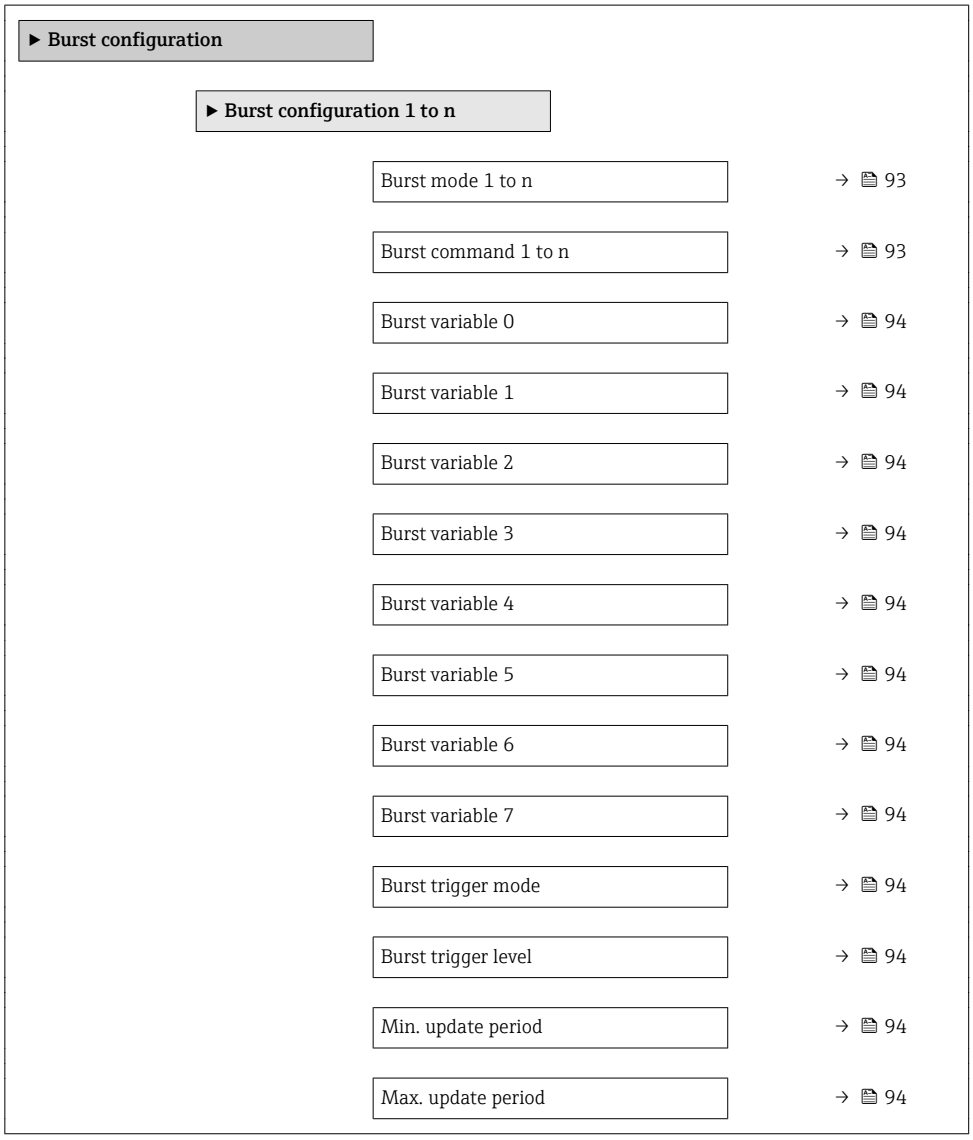

Parameter overview with brief description

Parameter	Description	Selection / User entry	Factory setting
Burst mode 1 to n	Activate the HART burst mode for burst message X.	▪ Off ▪ On	Off
Burst command 1 to n	Select the HART command that is sent to the HART master.	▪ Command 1 ▪ Command 2 ▪ Command 3 ▪ Command 9 ▪ Command 33 ▪ Command 48	Command 2

Parameter	Description	Selection / User entry	Factory setting
Burst variable 0	For HART command 9 and 33: select the HART device variable or the process variable.	▪ Volume flow ▪ Mass flow ▪ Corrected volume flow ▪ Flow velocity ▪ Conductivity * ▪ Electronic temperature ▪ Totalizer 1 ▪ Totalizer 2 ▪ Totalizer 3 ▪ Density ▪ HART input ▪ Percent of range ▪ Measured current ▪ Primary variable (PV) ▪ Secondary variable (SV) ▪ Tertiary variable (TV) ▪ Quaternary variable (QV) ▪ Not used	Volume flow
Burst variable 1	For HART command 9 and 33: select the HART device variable or the process variable.	See the **Burst variable 0** parameter.	Not used
Burst variable 2	For HART command 9 and 33: select the HART device variable or the process variable.	See the **Burst variable 0** parameter.	Not used
Burst variable 3	For HART command 9 and 33: select the HART device variable or the process variable.	See the **Burst variable 0** parameter.	Not used
Burst variable 4	For HART command 9: select the HART device variable or the process variable.	See the **Burst variable 0** parameter.	Not used
Burst variable 5	For HART command 9: select the HART device variable or the process variable.	See the **Burst variable 0** parameter.	Not used
Burst variable 6	For HART command 9: select the HART device variable or the process variable.	See the **Burst variable 0** parameter.	Not used
Burst variable 7	For HART command 9: select the HART device variable or the process variable.	See the **Burst variable 0** parameter.	Not used
Burst trigger mode	Select the event that triggers burst message X.	▪ Continuous ▪ Window * ▪ Rising * ▪ Falling * ▪ On change	Continuous
Burst trigger level	Enter the burst trigger value. Together with the option selected in the **Burst trigger mode** parameter the burst trigger value determines the time of burst message X.	Signed floating-point number	–
Min. update period	Enter the minimum time span between two burst commands of burst message X.	Positive integer	1 000 ms
Max. update period	Enter the maximum time span between two burst commands of burst message X.	Positive integer	2 000 ms

* Visibility depends on order options or device settings

10 Commissioning

10.1 Function check

Before commissioning the measuring device:

▶ Make sure that the post-installation and post-connection checks have been performed.

- "Post-installation check" checklist→ 37
- "Post-connection check" checklist → 63

10.2 Switching on the measuring device

▶ After a successful function check, switch on the measuring device.
  ↳ After a successful startup, the local display switches automatically from the startup display to the operational display.

If nothing appears on the local display or a diagnostic message is displayed, refer to the section on "Diagnostics and troubleshooting" → 148.

10.3 Setting the operating language

Factory setting: English or ordered local language

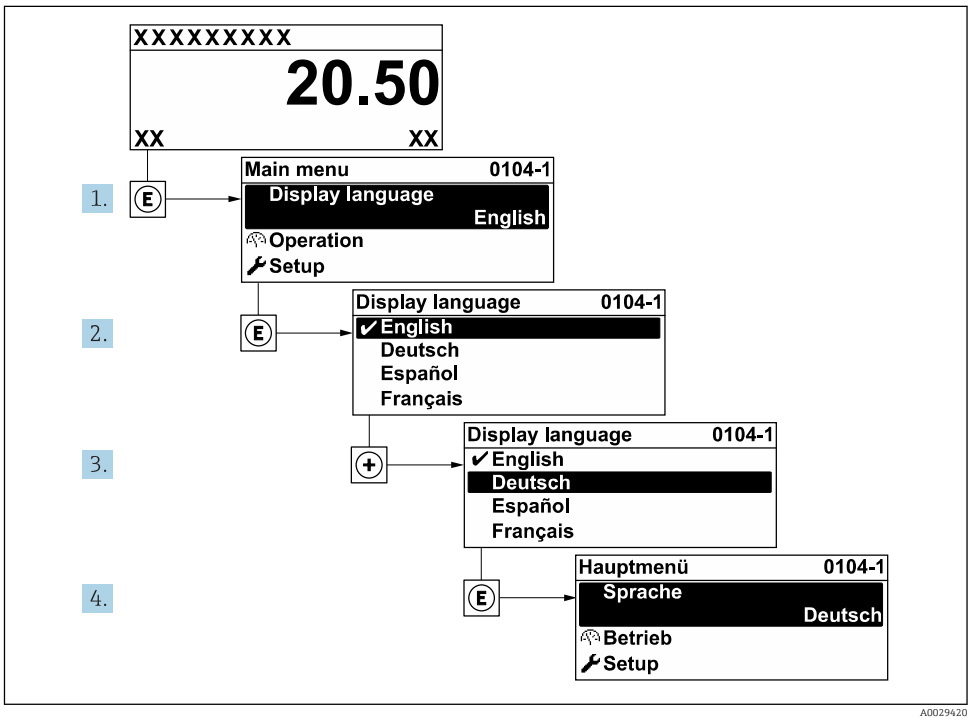

40 *Taking the example of the local display*

10.4 Configuring the measuring device

- The **Setup** menu with its guided wizards contains all the parameters needed for standard operation.
- Navigation to the **Setup** menu

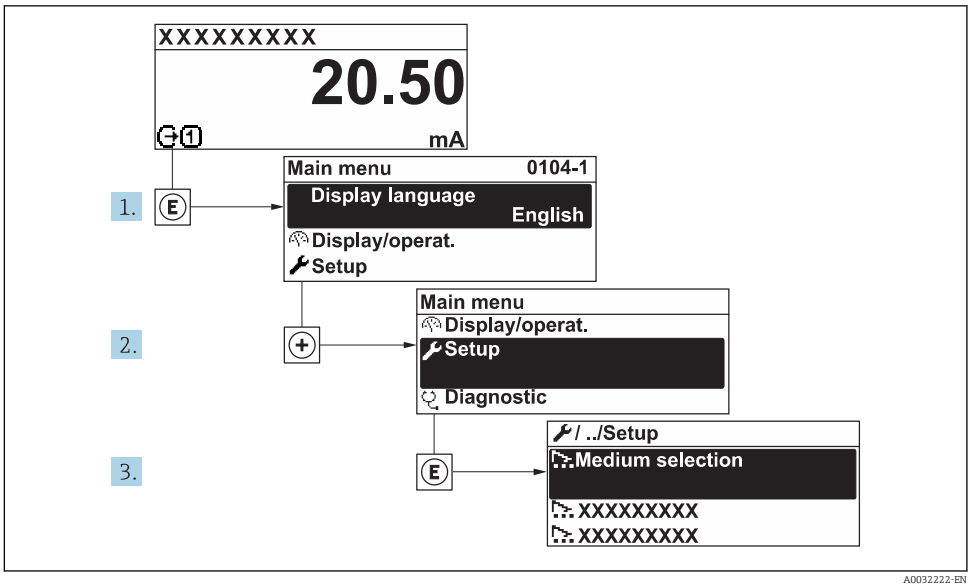

41 *Taking the example of the local display*

The number of submenus and parameters can vary depending on the device version. Certain submenus and parameters in these submenus are not described in the Operation Instructions. Instead a description is provided in the Special Documentation for the device (→ "Supplementary documentation" section).

Setup

Device tag	→ 97
▶ System units	→ 97
▶ I/O configuration	→ 99
▶ Current input 1 to n	→ 101
▶ Status input 1 to n	→ 100
▶ Current output 1 to n	→ 102
▶ Pulse/frequency/switch output 1 to n	→ 105
▶ Relay output 1 to n	→ 116
▶ Double pulse output	→ 118
▶ Display	→ 111
▶ Low flow cut off	→ 113

▶ Empty pipe detection	→ 114
▶ Advanced setup	→ 120

10.4.1 Defining the tag name

To enable fast identification of the measuring point within the system, you can enter a unique designation using the **Device tag** parameter and thus change the factory setting.

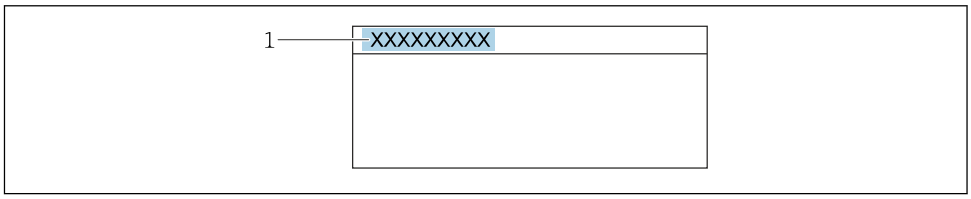

42 *Header of the operational display with tag name*

1 Tag name

Enter the tag name in the "FieldCare" operating tool → 89

Navigation
"Setup" menu → Device tag

Parameter overview with brief description

Parameter	Description	User entry	Factory setting
Device tag	Enter the name for the measuring point.	Max. 32 characters, such as letters, numbers or special characters (e.g. @, %, /).	Promag

10.4.2 Setting the system units

In the **System units** submenu the units of all the measured values can be set.

The number of submenus and parameters can vary depending on the device version. Certain submenus and parameters in these submenus are not described in the Operation Instructions. Instead a description is provided in the Special Documentation for the device (→ "Supplementary documentation" section).

Navigation
"Setup" menu → System units

▶ System units	
Volume flow unit	→ 98
Volume unit	→ 98
Conductivity unit	→ 98
Temperature unit	→ 98

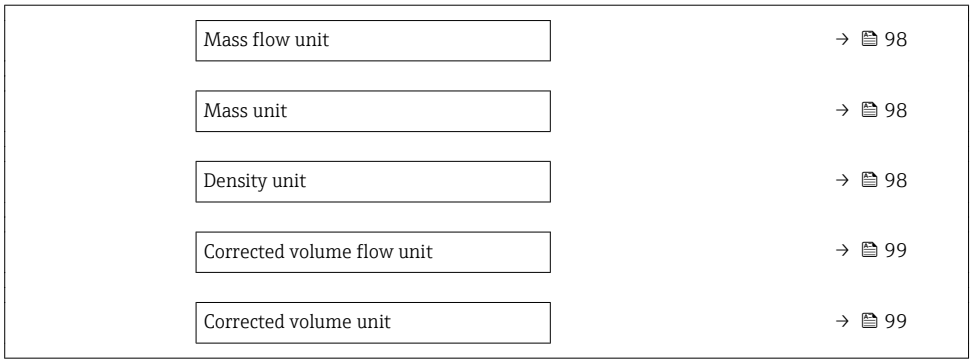

Parameter overview with brief description

Parameter	Prerequisite	Description	Selection	Factory setting
Volume flow unit	–	Select volume flow unit. *Result* The selected unit applies for: ▪ Output ▪ Low flow cut off ▪ Simulation process variable	Unit choose list	Country-specific: ▪ l/h ▪ gal/min (us)
Volume unit	–	Select volume unit.	Unit choose list	Country-specific: ▪ m^3 ▪ gal (us)
Conductivity unit	The **On** option is selected in the **Conductivity measurement** parameter parameter.	Select conductivity unit. *Effect* The selected unit applies for: ▪ Current output ▪ Frequency output ▪ Switch output ▪ Simulation process variable	Unit choose list	µS/cm
Temperature unit	–	Select temperature unit. *Result* The selected unit applies for: ▪ **Temperature** parameter ▪ **Maximum value** parameter ▪ **Minimum value** parameter ▪ **External temperature** parameter ▪ **Maximum value** parameter ▪ **Minimum value** parameter	Unit choose list	Country-specific: ▪ °C ▪ °F
Mass flow unit	–	Select mass flow unit. *Result* The selected unit applies for: ▪ Output ▪ Low flow cut off ▪ Simulation process variable	Unit choose list	Country-specific: ▪ kg/h ▪ lb/min
Mass unit	–	Select mass unit.	Unit choose list	Country-specific: ▪ kg ▪ lb
Density unit	–	Select density unit. *Result* The selected unit applies for: ▪ Output ▪ Simulation process variable	Unit choose list	Country-specific: ▪ kg/l ▪ lb/ft^3

Parameter	Prerequisite	Description	Selection	Factory setting
Corrected volume flow unit	–	Select corrected volume flow unit. *Result* The selected unit applies for: **Corrected volume flow** parameter (→ 139)	Unit choose list	Country-specific: ▪ Nl/h ▪ Sft³/h
Corrected volume unit	–	Select corrected volume unit.	Unit choose list	Country-specific: ▪ Nm³ ▪ Sft³

10.4.3 Displaying the I/O configuration

The **I/O configuration** submenu guides the user systematically through all the parameters in which the configuration of the I/O modules is displayed.

Navigation
"Setup" menu → I/O configuration

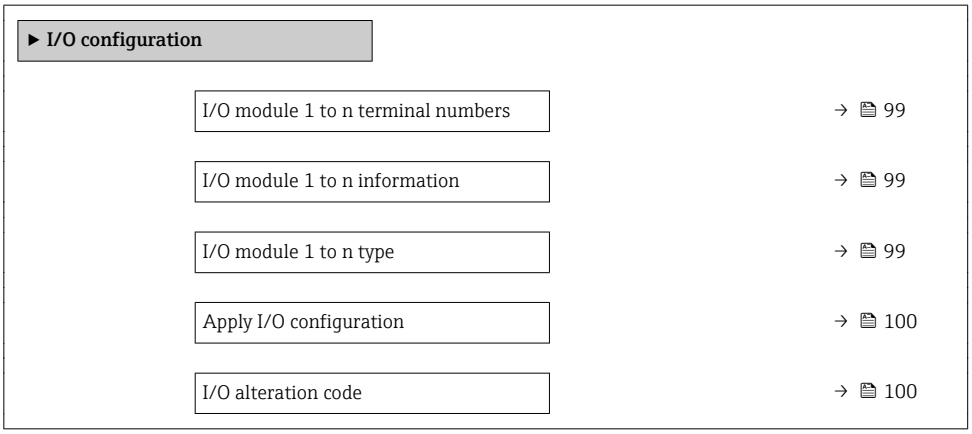

Parameter overview with brief description

Parameter	Description	User interface / Selection / User entry	Factory setting
I/O module 1 to n terminal numbers	Shows the terminal numbers used by the I/O module.	▪ Not used ▪ 26-27 (I/O 1) ▪ 24-25 (I/O 2) ▪ 22-23 (I/O 3) ▪ 20-21 (I/O 4) *	–
I/O module 1 to n information	Shows information of the plugged I/O module.	▪ Not plugged ▪ Invalid ▪ Not configurable ▪ Configurable ▪ HART	–
I/O module 1 to n type	Shows the I/O module type.	▪ Off ▪ Current output * ▪ Current input * ▪ Status input * ▪ Pulse/frequency/switch output * ▪ Double pulse output * ▪ Relay output *	Off

Parameter	Description	User interface / Selection / User entry	Factory setting
Apply I/O configuration	Apply parameterization of the freely configurable I/O module.	▪ No ▪ Yes	No
I/O alteration code	Enter the code in order to change the I/O configuration.	Positive integer	0

* Visibility depends on order options or device settings

10.4.4 Configuring the status input

The **Status input** submenu guides the user systematically through all the parameters that have to be set for configuring the status input.

Navigation
"Setup" menu → Status input

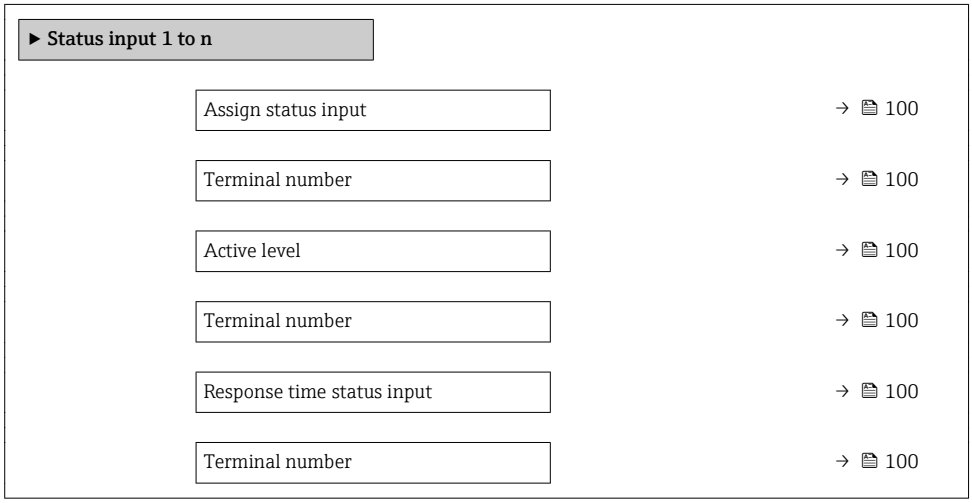

Parameter overview with brief description

Parameter	Description	User interface / Selection / User entry	Factory setting
Terminal number	Shows the terminal numbers used by the status input module.	▪ Not used ▪ 24-25 (I/O 2) ▪ 22-23 (I/O 3) ▪ 20-21 (I/O 4) *	–
Assign status input	Select function for the status input.	▪ Off ▪ Reset totalizer 1 ▪ Reset totalizer 2 ▪ Reset totalizer 3 ▪ Reset all totalizers ▪ Flow override	Off
Active level	Define input signal level at which the assigned function is triggered.	▪ High ▪ Low	High
Response time status input	Define the minimum amount of time the input signal level must be present before the selected function is triggered.	5 to 200 ms	50 ms

* Visibility depends on order options or device settings

10.4.5 Configuring the current input

The **"Current input" wizard** guides the user systematically through all the parameters that have to be set for configuring the current input.

Navigation
"Setup" menu → Current input

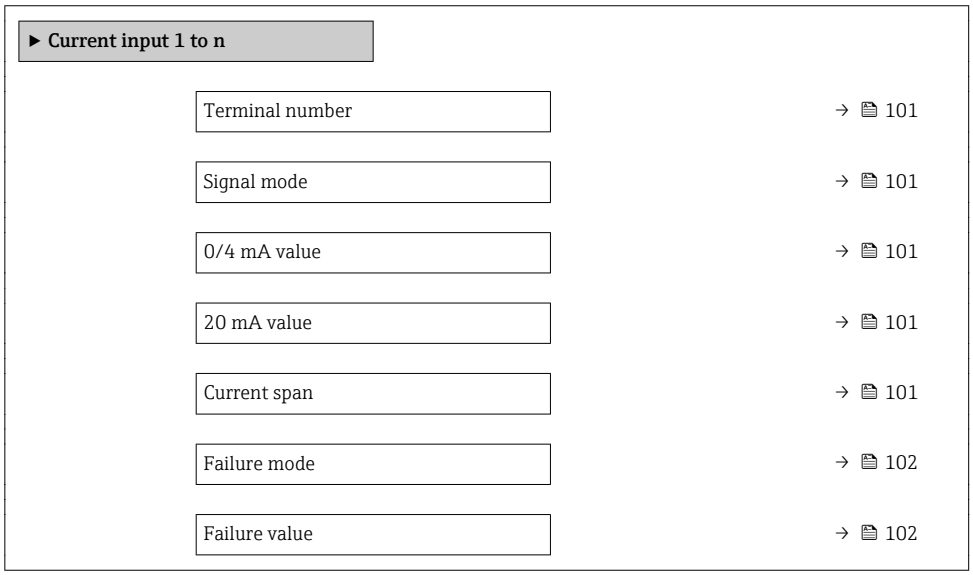

Parameter overview with brief description

Parameter	Prerequisite	Description	User interface / Selection / User entry	Factory setting
Terminal number	–	Shows the terminal numbers used by the current input module.	▪ Not used ▪ 24-25 (I/O 2) ▪ 22-23 (I/O 3) ▪ 20-21 (I/O 4) *	–
Signal mode	The measuring device is **not** approved for use in the hazardous area with type of protection Ex-i.	Select the signal mode for the current input.	▪ Passive ▪ Active *	Active
0/4 mA value	–	Enter 4 mA value.	Signed floating-point number	0
20 mA value	–	Enter 20 mA value.	Signed floating-point number	Depends on country and nominal diameter
Current span	–	Select current range for process value output and upper/lower level for alarm signal.	▪ 4...20 mA (4... 20.5 mA) ▪ 4...20 mA NAMUR (3.8...20.5 mA) ▪ 4...20 mA US (3.9...20.8 mA) ▪ 0...20 mA (0... 20.5 mA)	Country-specific: ▪ 4...20 mA NAMUR (3.8...20.5 mA) ▪ 4...20 mA US (3.9...20.8 mA)

Parameter	Prerequisite	Description	User interface / Selection / User entry	Factory setting
Failure mode	–	Define input behavior in alarm condition.	▪ Alarm ▪ Last valid value ▪ Defined value	Alarm
Failure value	In the **Failure mode** parameter, the **Defined value** option is selected.	Enter value to be used by the device if input value from external device is missing.	Signed floating-point number	0

* Visibility depends on order options or device settings

10.4.6 Configuring the current output

The **Current output** wizard guides you systematically through all the parameters that have to be set for configuring the current output.

Navigation
"Setup" menu → Current output



Parameter overview with brief description

Parameter	Prerequisite	Description	User interface / Selection / User entry	Factory setting
Terminal number	–	Shows the terminal numbers used by the current output module.	▪ Not used ▪ 26-27 (I/O 1) ▪ 24-25 (I/O 2) ▪ 22-23 (I/O 3) ▪ 20-21 (I/O 4) *	–
Signal mode	–	Select the signal mode for the current output.	▪ Active * ▪ Passive *	Active
Assign current output 1 to n	–	Select process variable for current output.	▪ Off * ▪ Volume flow ▪ Mass flow ▪ Corrected volume flow ▪ Flow velocity ▪ Conductivity * ▪ Electronic temperature ▪ Reference electrode potential against PE * ▪ Coil current shot time * ▪ Noise * ▪ Coating measured value * ▪ Test point 1 ▪ Test point 2 ▪ Test point 3	Volume flow
Current span	–	Select current range for process value output and upper/lower level for alarm signal.	▪ 4...20 mA NAMUR (3.8...20.5 mA) ▪ 4...20 mA US (3.9...20.8 mA) ▪ 4...20 mA (4... 20.5 mA) ▪ 0...20 mA (0... 20.5 mA) ▪ Fixed current	Country-specific: ▪ 4...20 mA NAMUR (3.8...20.5 mA) ▪ 4...20 mA US (3.9...20.8 mA)
0/4 mA value	In the **Current span** parameter (→ 🖹 103), one of the following options is selected: ▪ 4...20 mA NAMUR (3.8...20.5 mA) ▪ 4...20 mA US (3.9...20.8 mA) ▪ 4...20 mA (4... 20.5 mA) ▪ 0...20 mA (0... 20.5 mA)	Enter 4 mA value.	Signed floating-point number	Country-specific: ▪ 0 l/h ▪ 0 gal/min (us)
20 mA value	One of the following options is selected in the **Current span** parameter (→ 🖹 103): ▪ 4...20 mA NAMUR (3.8...20.5 mA) ▪ 4...20 mA US (3.9...20.8 mA) ▪ 4...20 mA (4... 20.5 mA) ▪ 0...20 mA (0... 20.5 mA)	Enter 20 mA value.	Signed floating-point number	Depends on country and nominal diameter
Fixed current	The **Fixed current** option is selected in the **Current span** parameter (→ 🖹 103).	Defines the fixed output current.	0 to 22.5 mA	22.5 mA

Parameter	Prerequisite	Description	User interface / Selection / User entry	Factory setting
Damping output 1 to n	A process variable is selected in the **Assign current output** parameter (→ 🖹 103) and one of the following options is selected in the **Current span** parameter (→ 🖹 103): ▪ 4...20 mA NAMUR (3.8...20.5 mA) ▪ 4...20 mA US (3.9...20.8 mA) ▪ 4...20 mA (4... 20.5 mA) ▪ 0...20 mA (0... 20.5 mA)	Set reaction time for output signal to fluctuations in the measured value.	0.0 to 999.9 s	1.0 s
Failure mode	A process variable is selected in the **Assign current output** parameter (→ 🖹 103) and one of the following options is selected in the **Current span** parameter (→ 🖹 103): ▪ 4...20 mA NAMUR (3.8...20.5 mA) ▪ 4...20 mA US (3.9...20.8 mA) ▪ 4...20 mA (4... 20.5 mA) ▪ 0...20 mA (0... 20.5 mA)	Define output behavior in alarm condition.	▪ Min. ▪ Max. ▪ Last valid value ▪ Actual value ▪ Defined value	Max.
Failure current	The **Defined value** option is selected in the **Failure mode** parameter.	Enter current output value in alarm condition.	0 to 22.5 mA	22.5 mA

* Visibility depends on order options or device settings

10.4.7 Configuring the pulse/frequency/switch output

The **Pulse/frequency/switch output** wizard guides you systematically through all the parameters that can be set for configuring the selected output type.

Navigation

"Setup" menu → Advanced setup → Pulse/frequency/switch output

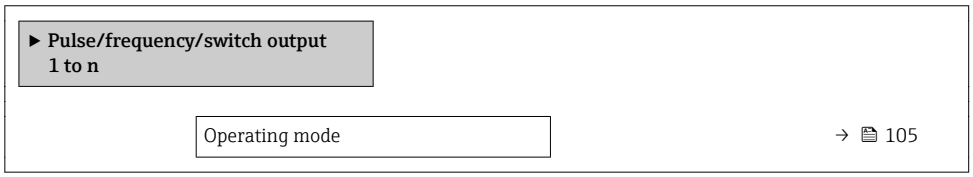

Parameter overview with brief description

Parameter	Description	Selection	Factory setting
Operating mode	Define the output as a pulse, frequency or switch output.	▪ Pulse ▪ Frequency ▪ Switch	Pulse

Configuring the pulse output

Navigation

"Setup" menu → Pulse/frequency/switch output

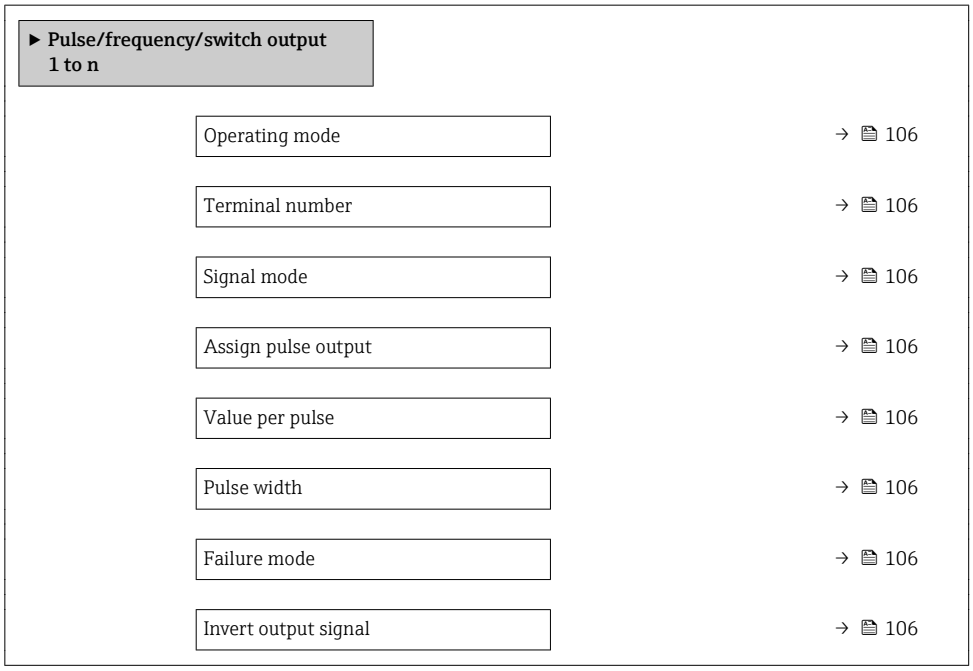

Parameter overview with brief description

Parameter	Prerequisite	Description	Selection / User interface / User entry	Factory setting
Operating mode	–	Define the output as a pulse, frequency or switch output.	▪ Pulse ▪ Frequency ▪ Switch	Pulse
Terminal number	–	Shows the terminal numbers used by the PFS output module.	▪ Not used ▪ 24-25 (I/O 2) ▪ 22-23 (I/O 3) ▪ 20-21 (I/O 4) *	–
Signal mode	–	Select the signal mode for the PFS output.	▪ Passive ▪ Active ▪ Passive NAMUR	Passive
Assign pulse output 1 to n	The **Pulse** option is selected in the **Operating mode** parameter parameter.	Select process variable for pulse output.	▪ Off ▪ Volume flow ▪ Mass flow ▪ Corrected volume flow	Off
Pulse scaling	The **Pulse** option is selected in the **Operating mode** parameter (→ 🖹 105) and a process variable is selected in the **Assign pulse output** parameter (→ 🖹 106).	Enter quantity for measured value at which a pulse is output.	Positive floating point number	Depends on country and nominal diameter
Pulse width	The **Pulse** option is selected in the **Operating mode** parameter (→ 🖹 105) and a process variable is selected in the **Assign pulse output** parameter (→ 🖹 106).	Define time width of the output pulse.	0.05 to 2 000 ms	100 ms
Failure mode	The **Pulse** option is selected in the **Operating mode** parameter (→ 🖹 105) and a process variable is selected in the **Assign pulse output** parameter (→ 🖹 106).	Define output behavior in alarm condition.	▪ Actual value ▪ No pulses	No pulses
Invert output signal	–	Invert the output signal.	▪ No ▪ Yes	No

* Visibility depends on order options or device settings

Configuring the frequency output

Navigation

"Setup" menu → Pulse/frequency/switch output

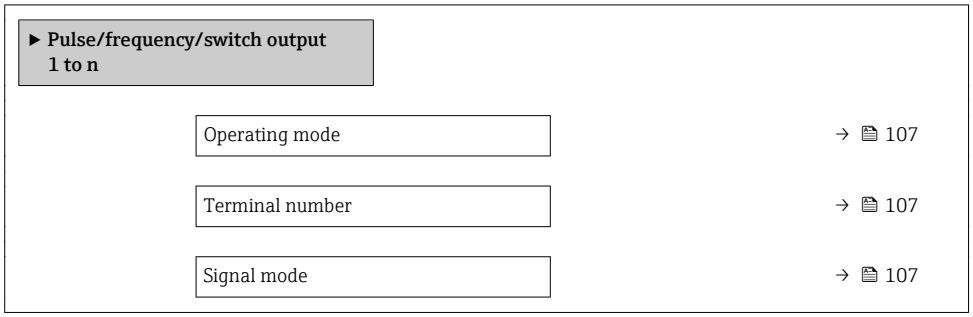

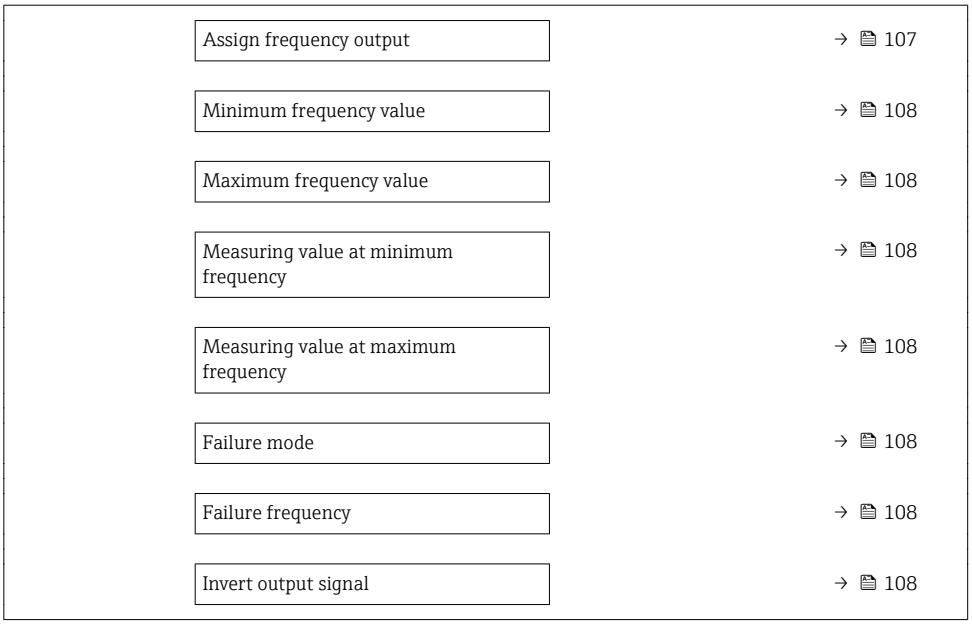

Parameter overview with brief description

Parameter	Prerequisite	Description	Selection / User interface / User entry	Factory setting
Operating mode	–	Define the output as a pulse, frequency or switch output.	▪ Pulse ▪ Frequency ▪ Switch	Pulse
Terminal number	–	Shows the terminal numbers used by the PFS output module.	▪ Not used ▪ 24-25 (I/O 2) ▪ 22-23 (I/O 3) ▪ 20-21 (I/O 4) *	–
Signal mode	–	Select the signal mode for the PFS output.	▪ Passive ▪ Active ▪ Passive NAMUR	Passive
Assign frequency output	The **Frequency** option is selected in the **Operating mode** parameter (→ 105).	Select process variable for frequency output.	▪ Off ▪ Volume flow ▪ Mass flow ▪ Corrected volume flow ▪ Flow velocity ▪ Conductivity * ▪ Electronic temperature ▪ Noise * ▪ Coil current shot time * ▪ Reference electrode potential against PE * ▪ Coating measured value * ▪ Test point 1 ▪ Test point 2 ▪ Test point 3	Off

Parameter	Prerequisite	Description	Selection / User interface / User entry	Factory setting
Minimum frequency value	The **Frequency** option is selected in the **Operating mode** parameter (→ 🖹 105) and a process variable is selected in the **Assign frequency output** parameter (→ 🖹 107).	Enter minimum frequency.	0.0 to 10 000.0 Hz	0.0 Hz
Maximum frequency value	The **Frequency** option is selected in the **Operating mode** parameter (→ 🖹 105) and a process variable is selected in the **Assign frequency output** parameter (→ 🖹 107).	Enter maximum frequency.	0.0 to 10 000.0 Hz	10 000.0 Hz
Measuring value at minimum frequency	The **Frequency** option is selected in the **Operating mode** parameter (→ 🖹 105) and a process variable is selected in the **Assign frequency output** parameter (→ 🖹 107).	Enter measured value for minmum frequency.	Signed floating-point number	Depends on country and nominal diameter
Measuring value at maximum frequency	The **Frequency** option is selected in the **Operating mode** parameter (→ 🖹 105) and a process variable is selected in the **Assign frequency output** parameter (→ 🖹 107).	Enter measured value for maximum frequency.	Signed floating-point number	Depends on country and nominal diameter
Failure mode	The **Frequency** option is selected in the **Operating mode** parameter (→ 🖹 105) and a process variable is selected in the **Assign frequency output** parameter (→ 🖹 107).	Define output behavior in alarm condition.	▪ Actual value ▪ Defined value ▪ 0 Hz	0 Hz
Failure frequency	The **Frequency** option is selected in the **Operating mode** parameter (→ 🖹 105) and a process variable is selected in the **Assign frequency output** parameter (→ 🖹 107).	Enter frequency output value in alarm condition.	0.0 to 12 500.0 Hz	0.0 Hz
Invert output signal	–	Invert the output signal.	▪ No ▪ Yes	No

* Visibility depends on order options or device settings

Configuring the switch output

Navigation
"Setup" menu → Pulse/frequency/switch output

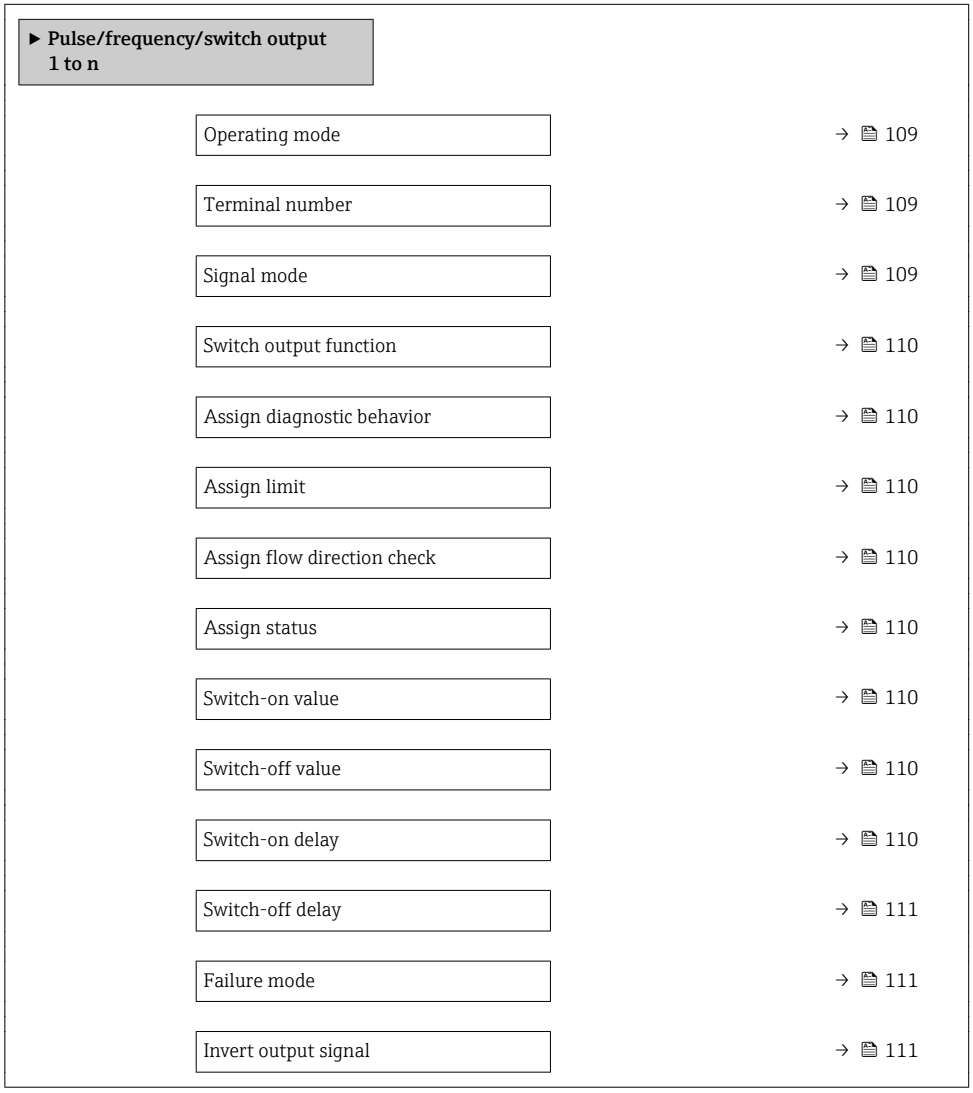

Parameter overview with brief description

Parameter	Prerequisite	Description	Selection / User interface / User entry	Factory setting
Operating mode	–	Define the output as a pulse, frequency or switch output.	▪ Pulse ▪ Frequency ▪ Switch	Pulse
Terminal number	–	Shows the terminal numbers used by the PFS output module.	▪ Not used ▪ 24-25 (I/O 2) ▪ 22-23 (I/O 3) ▪ 20-21 (I/O 4) *	–
Signal mode	–	Select the signal mode for the PFS output.	▪ Passive ▪ Active ▪ Passive NAMUR	Passive

Parameter	Prerequisite	Description	Selection / User interface / User entry	Factory setting
Switch output function	The **Switch** option is selected in the **Operating mode** parameter.	Select function for switch output.	▪ Off ▪ On ▪ Diagnostic behavior ▪ Limit ▪ Flow direction check ▪ Status	Off
Assign diagnostic behavior	▪ In the **Operating mode** parameter, the **Switch** option is selected. ▪ In the **Switch output function** parameter, the **Diagnostic behavior** option is selected.	Select diagnostic behavior for switch output.	▪ Alarm ▪ Alarm or warning ▪ Warning	Alarm
Assign limit	▪ The **Switch** option is selected in the **Operating mode** parameter. ▪ The **Limit** option is selected in the **Switch output function** parameter.	Select process variable for limit function.	▪ Off ▪ Volume flow ▪ Mass flow ▪ Corrected volume flow ▪ Flow velocity ▪ Conductivity* ▪ Totalizer 1 ▪ Totalizer 2 ▪ Totalizer 3 ▪ Electronic temperature	Volume flow
Assign flow direction check	▪ The **Switch** option is selected in the **Operating mode** parameter. ▪ The **Flow direction check** option is selected in the **Switch output function** parameter.	Select process variable for flow direction monitoring.	▪ Off ▪ Volume flow ▪ Mass flow ▪ Corrected volume flow	Volume flow
Assign status	▪ The **Switch** option is selected in the **Operating mode** parameter. ▪ The **Status** option is selected in the **Switch output function** parameter.	Select device status for switch output.	▪ Empty pipe detection ▪ Low flow cut off	Empty pipe detection
Switch-on value	▪ The **Switch** option is selected in the **Operating mode** parameter. ▪ The **Limit** option is selected in the **Switch output function** parameter.	Enter measured value for the switch-on point.	Signed floating-point number	Country-specific: ▪ 0 l/h ▪ 0 gal/min (us)
Switch-off value	▪ The **Switch** option is selected in the **Operating mode** parameter. ▪ The **Limit** option is selected in the **Switch output function** parameter.	Enter measured value for the switch-off point.	Signed floating-point number	Country-specific: ▪ 0 l/h ▪ 0 gal/min (us)
Switch-on delay	▪ The **Switch** option is selected in the **Operating mode** parameter. ▪ The **Limit** option is selected in the **Switch output function** parameter.	Define delay for the switch-on of status output.	0.0 to 100.0 s	0.0 s

Parameter	Prerequisite	Description	Selection / User interface / User entry	Factory setting
Switch-off delay	▪ The **Switch** option is selected in the **Operating mode** parameter. ▪ The **Limit** option is selected in the **Switch output function** parameter.	Define delay for the switch-off of status output.	0.0 to 100.0 s	0.0 s
Failure mode	–	Define output behavior in alarm condition.	▪ Actual status ▪ Open ▪ Closed	Open
Invert output signal	–	Invert the output signal.	▪ No ▪ Yes	No

* Visibility depends on order options or device settings

10.4.8 Configuring the local display

The **Display** wizard guides you systematically through all the parameters that can configured for configuring the local display.

Navigation
"Setup" menu → Display

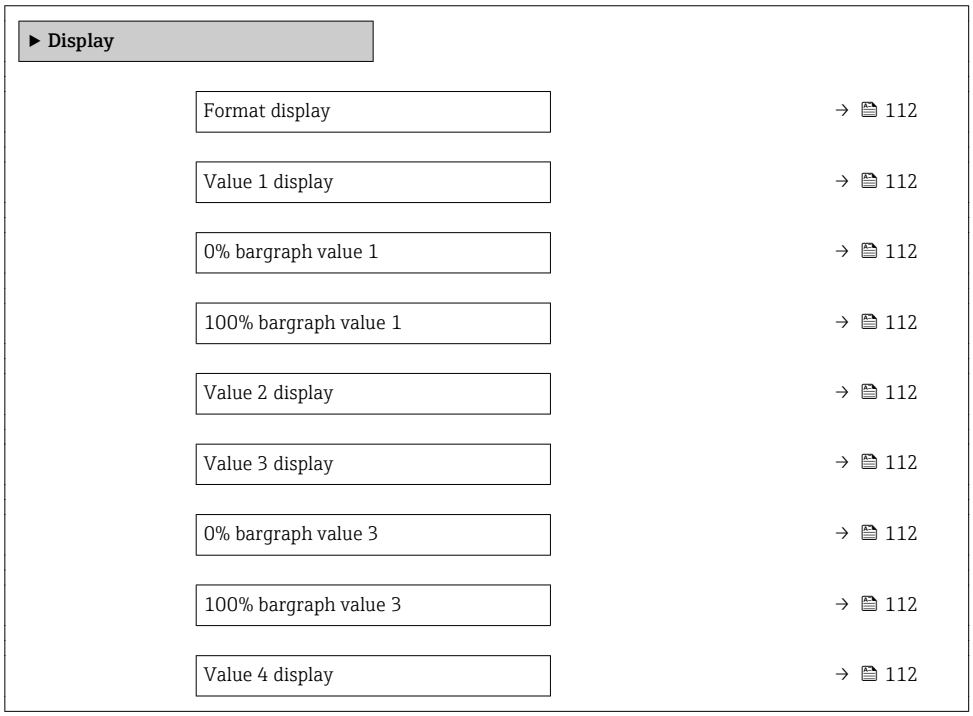

Parameter overview with brief description

Parameter	Prerequisite	Description	Selection / User entry	Factory setting
Format display	A local display is provided.	Select how measured values are shown on the display.	▪ 1 value, max. size ▪ 1 bargraph + 1 value ▪ 2 values ▪ 1 value large + 2 values ▪ 4 values	1 value, max. size
Value 1 display	A local display is provided.	Select the measured value that is shown on the local display.	▪ Volume flow ▪ Mass flow ▪ Corrected volume flow ▪ Flow velocity ▪ Totalizer 1 ▪ Totalizer 2 ▪ Totalizer 3 ▪ Current output 1 * ▪ Current output 2 * ▪ Current output 3 * ▪ Current output 4 * ▪ Electronic temperature ▪ Noise * ▪ Coil current shot time * ▪ Reference electrode potential against PE * ▪ Coating measured value * ▪ Test point 1 ▪ Test point 2 ▪ Test point 3	Volume flow
0% bargraph value 1	A local display is provided.	Enter 0% value for bar graph display.	Signed floating-point number	Country-specific: ▪ 0 l/h ▪ 0 gal/min (us)
100% bargraph value 1	A local display is provided.	Enter 100% value for bar graph display.	Signed floating-point number	Depends on country and nominal diameter
Value 2 display	A local display is provided.	Select the measured value that is shown on the local display.	For the picklist, see the **Value 2 display** parameter (→ 112)	None
Value 3 display	A local display is provided.	Select the measured value that is shown on the local display.	For the picklist, see the **Value 2 display** parameter (→ 112)	None
0% bargraph value 3	A selection was made in the **Value 3 display** parameter.	Enter 0% value for bar graph display.	Signed floating-point number	Country-specific: ▪ 0 l/h ▪ 0 gal/min (us)
100% bargraph value 3	A selection was made in the **Value 3 display** parameter.	Enter 100% value for bar graph display.	Signed floating-point number	0
Value 4 display	A local display is provided.	Select the measured value that is shown on the local display.	For the picklist, see the **Value 2 display** parameter (→ 112)	None

* Visibility depends on order options or device settings

10.4.9 Configuring the low flow cut off

The **Low flow cut off** wizard systematically guides the user through all the parameters that must be set to configure low flow cut off.

Navigation
"Setup" menu → Low flow cut off

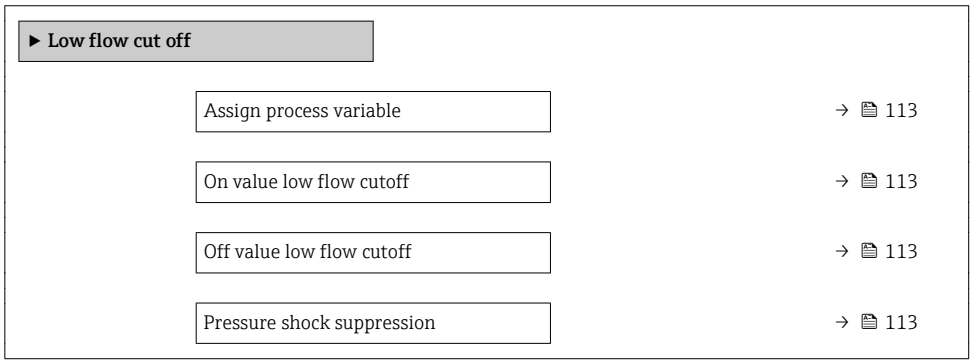

Parameter overview with brief description

Parameter	Prerequisite	Description	Selection / User entry	Factory setting
Assign process variable	–	Select process variable for low flow cut off.	▪ Off ▪ Volume flow ▪ Mass flow ▪ Corrected volume flow	Volume flow
On value low flow cutoff	A process variable is selected in the **Assign process variable** parameter (→ 113).	Enter on value for low flow cut off.	Positive floating-point number	Depends on country and nominal diameter
Off value low flow cutoff	A process variable is selected in the **Assign process variable** parameter (→ 113).	Enter off value for low flow cut off.	0 to 100.0 %	50 %
Pressure shock suppression	A process variable is selected in the **Assign process variable** parameter (→ 113).	Enter time frame for signal suppression (= active pressure shock suppression).	0 to 100 s	0 s

10.4.10 Configuring empty pipe detection

The **Empty pipe detection** submenu contains parameters that must be configured for the configuration of empty pipe detection.

Navigation
"Setup" menu → Empty pipe detection

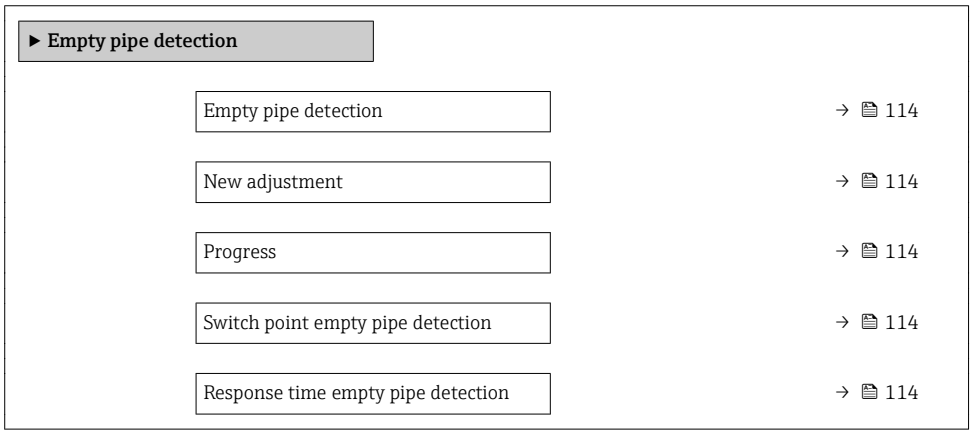

Parameter overview with brief description

Parameter	Prerequisite	Description	Selection / User interface / User entry	Factory setting
Empty pipe detection	–	Switch empty pipe detection on and off.	▪ Off ▪ On	Off
New adjustment	The **On** option is selected in the **Empty pipe detection** parameter.	Select type of adjustment.	▪ Cancel ▪ Empty pipe adjust ▪ Full pipe adjust	Cancel
Progress	The **On** option is selected in the **Empty pipe detection** parameter.	Shows the progress.	▪ Ok ▪ Busy ▪ Not ok	–
Switch point empty pipe detection	The **On** option is selected in the **Empty pipe detection** parameter.	Enter hysteresis in %, below this value the measuring tube will detected as empty.	0 to 100 %	10 %
Response time empty pipe detection	A process variable is selected in the **Assign process variable** parameter (→ 114).	Enter the time before diagnostic message S862 "Pipe empty" is displayed for empty pipe detection.	0 to 100 s	1 s

10.4.11 Configuring the HART input

Navigation
"Setup" menu → HART input

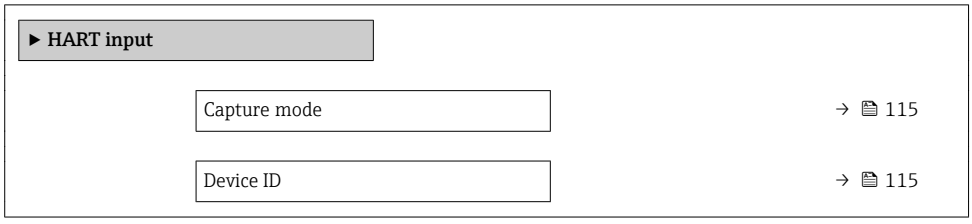

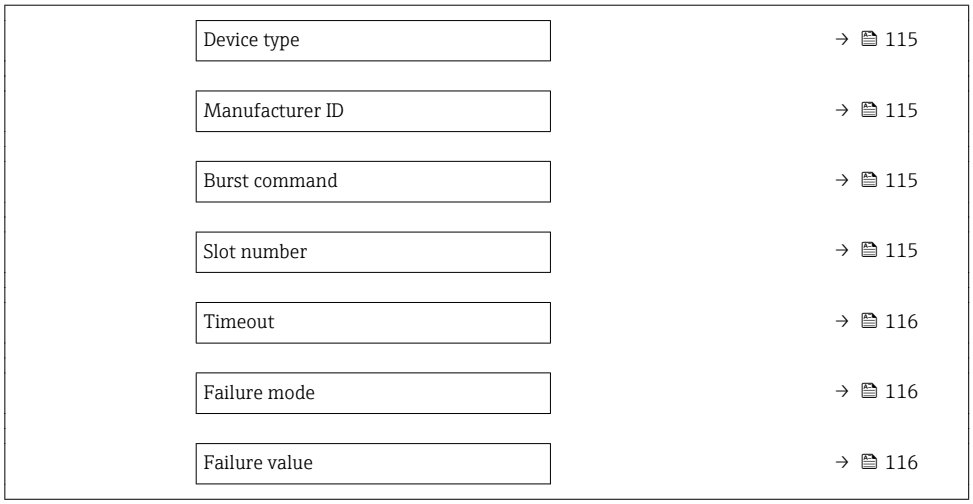

"Configuration" submenu

Navigation
"Expert" menu → Communication → HART input → Configuration

Parameter overview with brief description

Parameter	Prerequisite	Description	Selection / User entry	Factory setting
Capture mode	–	Select capture mode via burst or master communication.	▪ Off ▪ Burst network ▪ Master network	Off
Device ID	The **Master network** option is selected in the **Capture mode** parameter.	Enter device ID of external device.	6-digit value: ▪ Via local operation: enter as hexadecimal or decimal number ▪ Via operating tool: enter as decimal number	0
Device type	In the **Capture mode** parameter, the **Master network** option is selected.	Enter device type of external device.	2-digit hexadecimal number	0x00
Manufacturer ID	The **Master network** option is selected in the **Capture mode** parameter.	Enter manufacture ID of external device.	2-digit value: ▪ Via local operation: enter as hexadecimal or decimal number ▪ Via operating tool: enter as decimal number	0
Burst command	The **Burst network** option or the **Master network** option are selected in the **Capture mode** parameter.	Select command to read in external process variable.	▪ Command 1 ▪ Command 3 ▪ Command 9 ▪ Command 33	Command 1
Slot number	The **Burst network** option or the **Master network** option is selected in the **Capture mode** parameter.	Define position of external process variable in burst command.	1 to 8	1

Parameter	Prerequisite	Description	Selection / User entry	Factory setting
Timeout	The **Burst network** option or the **Master network** option is selected in the **Capture mode** parameter.	Enter deadline for process variable of external device. If the waiting time is exceeded, the **⊗F410 Data transfer** diagnostic message is displayed.	1 to 120 s	5 s
Failure mode	In the **Capture mode** parameter, the **Burst network** option or **Master network** option is selected.	Define behavior if external process variable is missed.	▪ Alarm ▪ Last valid value ▪ Defined value	Alarm
Failure value	The following conditions are met: ▪ In the **Capture mode** parameter, the **Burst network** option or **Master network** option is selected. ▪ In the **Failure mode** parameter, the **Defined value** option is selected.	Enter value to be used by the device if input value from external device is missing.	Signed floating-point number	0

"Input" submenu

Navigation
"Expert" menu → Communication → HART input → Input

Parameter overview with brief description

Parameter	Description	User interface
Value	Shows the value of the device variable recorded by the HART input.	Signed floating-point number
Status	Shows the status of the device variable recorded by the HART input.	▪ Manual/Fixed ▪ Good ▪ Poor accuracy ▪ Bad

10.4.12 Configuring the relay output

The **Relay output** wizard guides the user systematically through all the parameters that have to be set for configuring the relay output.

Navigation
"Setup" menu → Relay output 1 to n

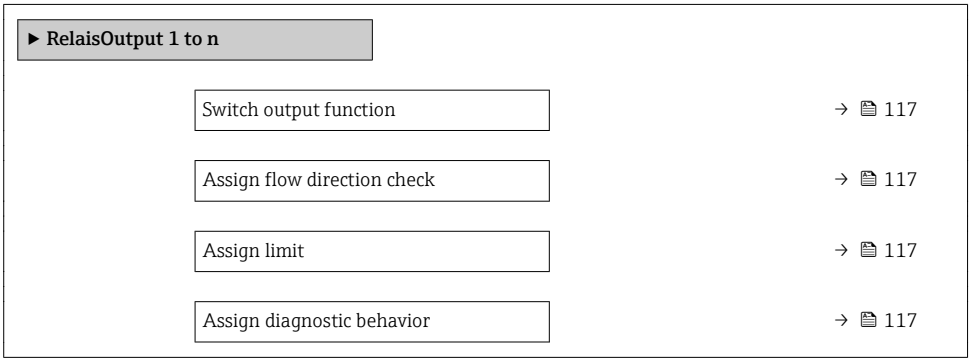

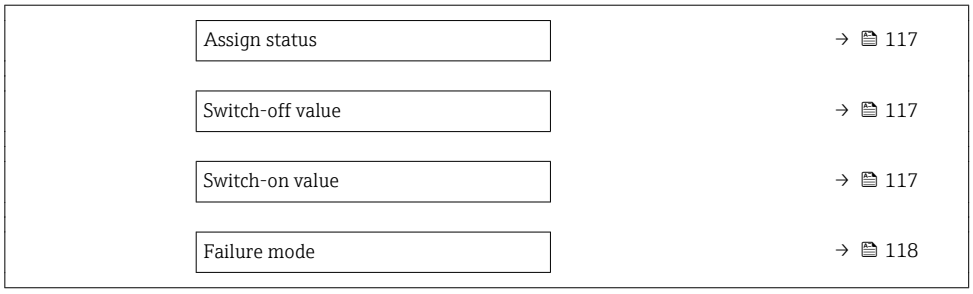

Parameter overview with brief description

Parameter	Prerequisite	Description	Selection / User interface / User entry	Factory setting
Relay output function	–	Select the function for the relay output.	▪ Closed ▪ Open ▪ Diagnostic behavior ▪ Limit ▪ Flow direction check ▪ Digital Output	Closed
Terminal number	–	Shows the terminal numbers used by the relay output module.	▪ Not used ▪ 24-25 (I/O 2) ▪ 22-23 (I/O 3) ▪ 20-21 (I/O 4)	–
Assign flow direction check	In the **Relay output function** parameter, the **Flow direction check** option is selected.	Select process variable for flow direction monitoring.	▪ Off ▪ Volume flow ▪ Mass flow ▪ Corrected volume flow	Volume flow
Assign limit	The **Limit** option is selected in the **Relay output function** parameter.	Select process variable for limit function.	▪ Off ▪ Volume flow ▪ Mass flow ▪ Corrected volume flow ▪ Flow velocity ▪ Conductivity * ▪ Totalizer 1 ▪ Totalizer 2 ▪ Totalizer 3 ▪ Electronic temperature	Volume flow
Assign diagnostic behavior	In the **Relay output function** parameter, the **Diagnostic behavior** option is selected.	Select diagnostic behavior for switch output.	▪ Alarm ▪ Alarm or warning ▪ Warning	Alarm
Assign status	In the **Relay output function** parameter, the **Digital Output** option is selected.	Select device status for switch output.	▪ Partially filled pipe detection ▪ Low flow cut off	Partially filled pipe detection
Switch-off value	In the **Relay output function** parameter, the **Limit** option is selected.	Enter measured value for the switch-off point.	Signed floating-point number	Country-specific: ▪ 0 l/h ▪ 0 gal(us)/min
Switch-off delay	In the **Relay output function** parameter, the **Limit** option is selected.	Define delay for the switch-off of status output.	0.0 to 100.0 s	0.0 s
Switch-on value	The **Limit** option is selected in the **Relay output function** parameter.	Enter measured value for the switch-on point.	Signed floating-point number	Country-specific: ▪ 0 l/h ▪ 0 gal(us)/min

Parameter	Prerequisite	Description	Selection / User interface / User entry	Factory setting
Switch-on delay	In the **Relay output function** parameter, the **Limit** option is selected.	Define delay for the switch-on of status output.	0.0 to 100.0 s	0.0 s
Failure mode	–	Define output behavior in alarm condition.	▪ Actual status ▪ Open ▪ Closed	Open

* Visibility depends on order options or device settings

10.4.13 Configuring the double pulse output

The **Double pulse output** submenu guides the user systematically through all the parameters that have to be set for configuring the double pulse output.

Navigation

"Setup" menu → Double pulse output

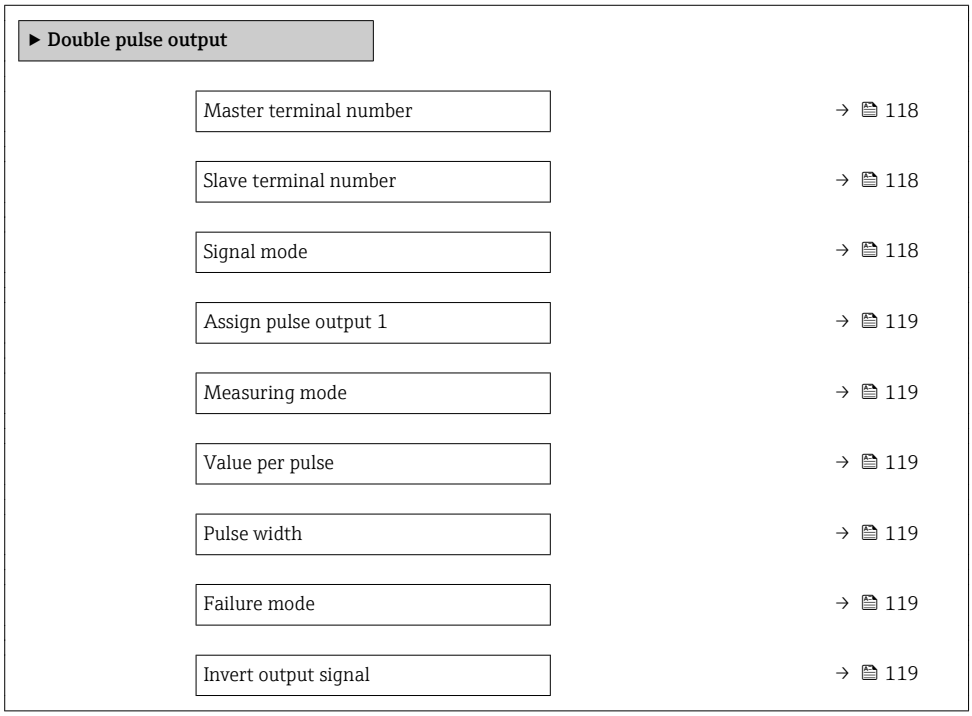

Parameter overview with brief description

Parameter	Description	Selection / User interface / User entry	Factory setting
Signal mode	Select the signal mode for the double pulse output.	▪ Passive ▪ Active ▪ Passive NAMUR	Passive
Master terminal number	Shows the terminal numbers used by the master of the double pulse output module.	▪ Not used ▪ 24-25 (I/O 2) ▪ 22-23 (I/O 3)	–
Slave terminal number	Shows the terminal numbers used by the slave of the double pulse output module.	▪ Not used ▪ 24-25 (I/O 2) ▪ 22-23 (I/O 3)	–

Parameter	Description	Selection / User interface / User entry	Factory setting
Assign pulse output 1	Select process variable for pulse output.	▪ Off ▪ Volume flow ▪ Mass flow ▪ Corrected volume flow	Off
Measuring mode	Select measuring mode for pulse output.	▪ Forward flow ▪ Forward/Reverse flow ▪ Reverse flow ▪ Reverse flow compensation	Forward flow
Value per pulse	Enter measured value at which a pulse is output.	Signed floating-point number	Depends on country and nominal diameter
Pulse width	Define time width of the output pulse.	0.5 to 2 000 ms	0.5 ms
Failure mode	Define output behavior in alarm condition.	▪ Actual value ▪ No pulses	No pulses
Invert output signal	Invert the output signal.	▪ No ▪ Yes	No

10.5 Advanced settings

The **Advanced setup** submenu together with its submenus contains parameters for specific settings.

Navigation to the "Advanced setup" submenu

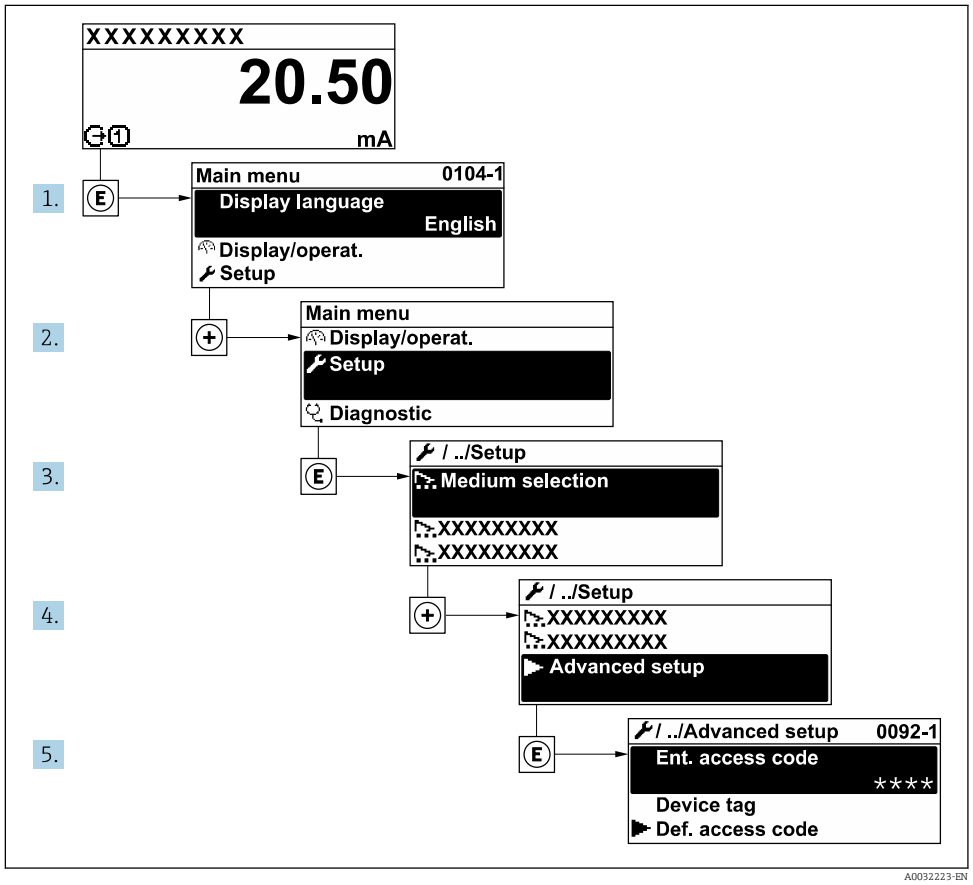

The number of submenus can vary depending on the device version. Some submenus are not dealt with in the Operating Instructions. These submenus and the parameters they contain are explained in the Special Documentation for the device.

Navigation
"Setup" menu → Advanced setup

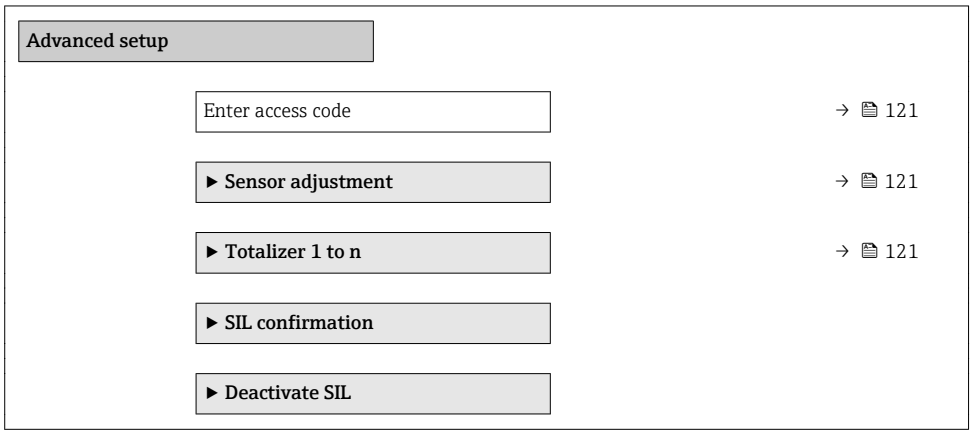

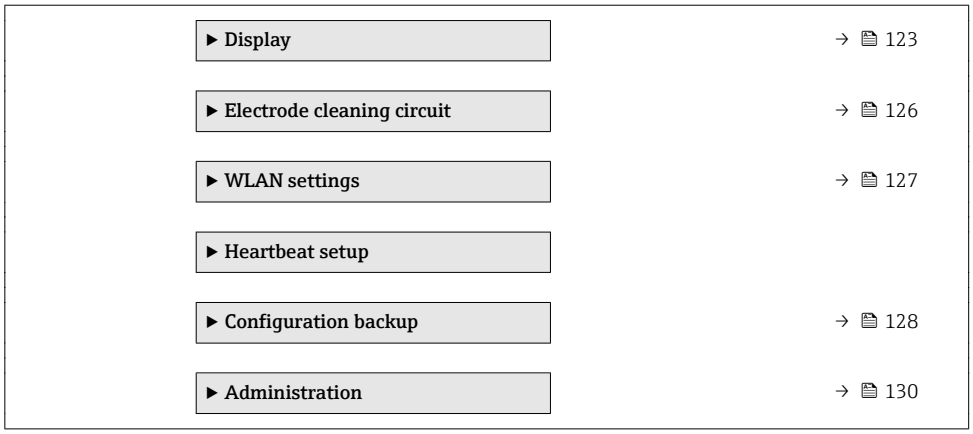

10.5.1 Using the parameter to enter the access code

Navigation
"Setup" menu → Advanced setup

Parameter overview with brief description

Parameter	Description	User entry
Enter access code	Enter access code to disable write protection of parameters.	Max. 16-digit character string comprising numbers, letters and special characters

10.5.2 Carrying out a sensor adjustment

The **Sensor adjustment** submenu contains parameters that pertain to the functionality of the sensor.

Navigation
"Setup" menu → Advanced setup → Sensor adjustment

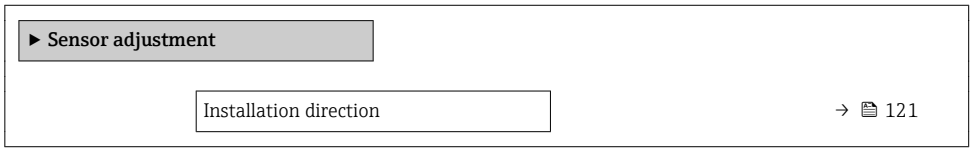

Parameter overview with brief description

Parameter	Description	Selection	Factory setting
Installation direction	Set sign of flow direction to match the direction of the arrow on the sensor.	▪ Flow in arrow direction ▪ Flow against arrow direction	Flow in arrow direction

10.5.3 Configuring the totalizer

In the **"Totalizer 1 to n" submenu** the individual totalizer can be configured.

Navigation
"Setup" menu → Advanced setup → Totalizer 1 to n

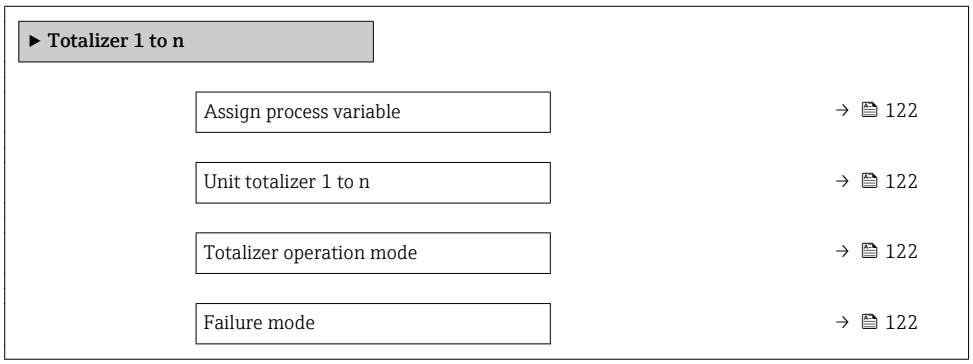

Parameter overview with brief description

Parameter	Prerequisite	Description	Selection	Factory setting
Assign process variable	–	Select process variable for totalizer.	▪ Off ▪ Volume flow ▪ Mass flow ▪ Corrected volume flow	Volume flow
Unit totalizer 1 to n	A process variable is selected in the **Assign process variable** parameter (→ 122) of the **Totalizer 1 to n** submenu.	Select process variable totalizer unit.	Unit choose list	l
Totalizer operation mode	A process variable is selected in the **Assign process variable** parameter (→ 122) of the **Totalizer 1 to n** submenu.	Select totalizer calculation mode.	▪ Net flow total ▪ Forward flow total ▪ Reverse flow total	Net flow total
Failure mode	A process variable is selected in the **Assign process variable** parameter (→ 122) of the **Totalizer 1 to n** submenu.	Define totalizer behavior in alarm condition.	▪ Stop ▪ Actual value ▪ Last valid value	Stop

10.5.4 Carrying out additional display configurations

In the **Display** submenu you can set all the parameters associated with the configuration of the local display.

Navigation
"Setup" menu → Advanced setup → Display

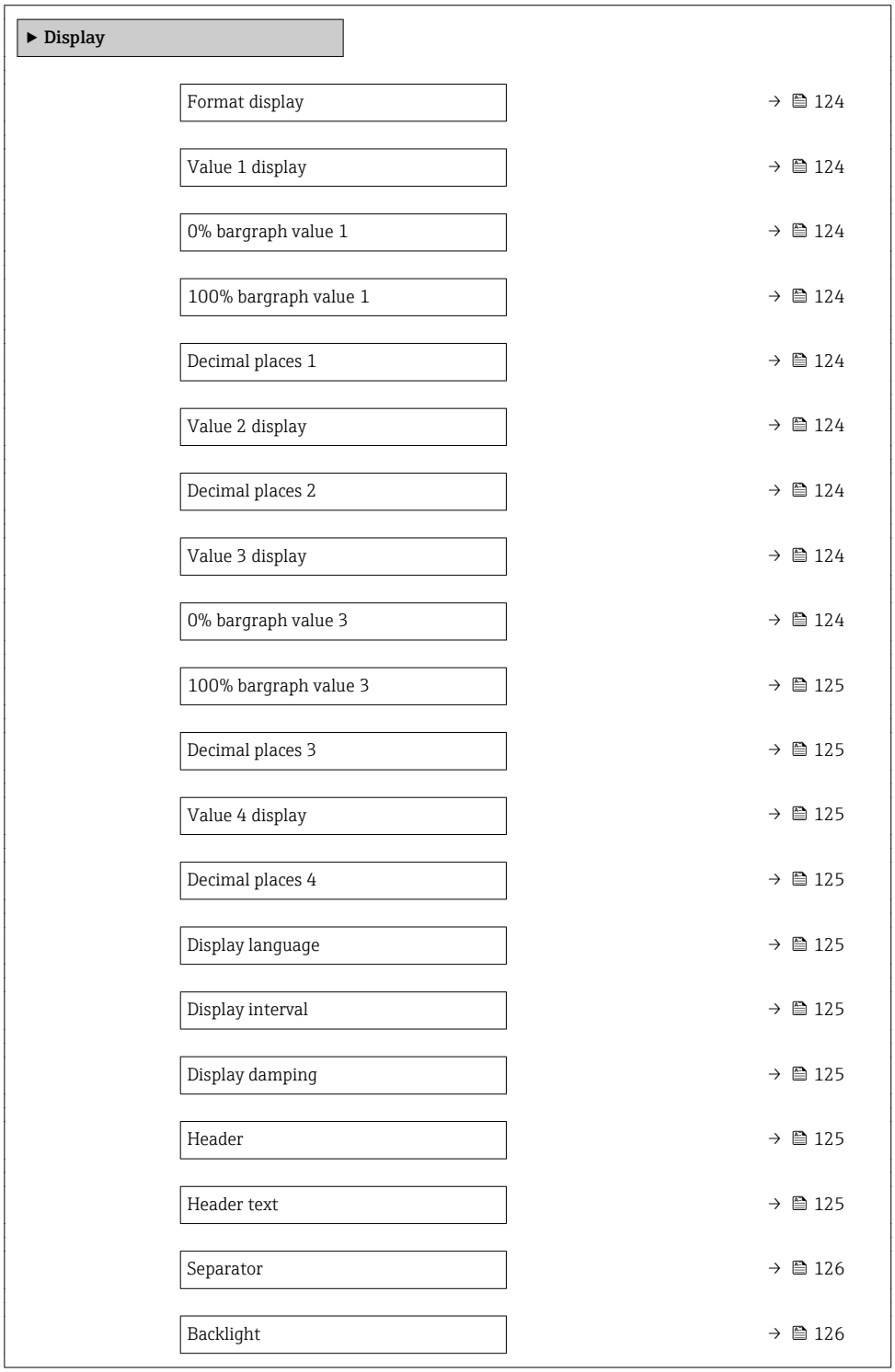

Parameter overview with brief description

Parameter	Prerequisite	Description	Selection / User entry	Factory setting
Format display	A local display is provided.	Select how measured values are shown on the display.	▪ 1 value, max. size ▪ 1 bargraph + 1 value ▪ 2 values ▪ 1 value large + 2 values ▪ 4 values	1 value, max. size
Value 1 display	A local display is provided.	Select the measured value that is shown on the local display.	▪ Volume flow ▪ Mass flow ▪ Corrected volume flow ▪ Flow velocity ▪ Totalizer 1 ▪ Totalizer 2 ▪ Totalizer 3 ▪ Current output 1 * ▪ Current output 2 * ▪ Current output 3 * ▪ Current output 4 * ▪ Electronic temperature ▪ Noise * ▪ Coil current shot time * ▪ Reference electrode potential against PE * ▪ Coating measured value * ▪ Test point 1 ▪ Test point 2 ▪ Test point 3	Volume flow
0% bargraph value 1	A local display is provided.	Enter 0% value for bar graph display.	Signed floating-point number	Country-specific: ▪ 0 l/h ▪ 0 gal/min (us)
100% bargraph value 1	A local display is provided.	Enter 100% value for bar graph display.	Signed floating-point number	Depends on country and nominal diameter
Decimal places 1	A measured value is specified in the **Value 1 display** parameter.	Select the number of decimal places for the display value.	▪ x ▪ x.x ▪ x.xx ▪ x.xxx ▪ x.xxxx	x.xx
Value 2 display	A local display is provided.	Select the measured value that is shown on the local display.	For the picklist, see the **Value 2 display** parameter (→ 112)	None
Decimal places 2	A measured value is specified in the **Value 2 display** parameter.	Select the number of decimal places for the display value.	▪ x ▪ x.x ▪ x.xx ▪ x.xxx ▪ x.xxxx	x.xx
Value 3 display	A local display is provided.	Select the measured value that is shown on the local display.	For the picklist, see the **Value 2 display** parameter (→ 112)	None
0% bargraph value 3	A selection was made in the **Value 3 display** parameter.	Enter 0% value for bar graph display.	Signed floating-point number	Country-specific: ▪ 0 l/h ▪ 0 gal/min (us)

Parameter	Prerequisite	Description	Selection / User entry	Factory setting
100% bargraph value 3	A selection was made in the **Value 3 display** parameter.	Enter 100% value for bar graph display.	Signed floating-point number	0
Decimal places 3	A measured value is specified in the **Value 3 display** parameter.	Select the number of decimal places for the display value.	▪ x ▪ x.x ▪ x.xx ▪ x.xxx ▪ x.xxxx	x.xx
Value 4 display	A local display is provided.	Select the measured value that is shown on the local display.	For the picklist, see the **Value 2 display** parameter (→ 🖹 112)	None
Decimal places 4	A measured value is specified in the **Value 4 display** parameter.	Select the number of decimal places for the display value.	▪ x ▪ x.x ▪ x.xx ▪ x.xxx ▪ x.xxxx	x.xx
Display language	A local display is provided.	Set display language.	▪ English ▪ Deutsch ▪ Français ▪ Español ▪ Italiano ▪ Nederlands ▪ Portuguesa ▪ Polski ▪ русский язык (Russian) ▪ Svenska ▪ Türkçe ▪ 中文 (Chinese) ▪ 日本語 (Japanese) ▪ 한국어 (Korean) ▪ العَرَبِيَة (Arabic) * ▪ Bahasa Indonesia ▪ ภาษาไทย (Thai) * ▪ tiếng Việt (Vietnamese) ▪ čeština (Czech)	English (alternatively, the ordered language is preset in the device)
Display interval	A local display is provided.	Set time measured values are shown on display if display alternates between values.	1 to 10 s	5 s
Display damping	A local display is provided.	Set display reaction time to fluctuations in the measured value.	0.0 to 999.9 s	0.0 s
Header	A local display is provided.	Select header contents on local display.	▪ Device tag ▪ Free text	Device tag
Header text	In the **Header** parameter, the **Free text** option is selected.	Enter display header text.	Max. 12 characters such as letters, numbers or special characters (e.g. @, %, /)	----------

Parameter	Prerequisite	Description	Selection / User entry	Factory setting
Separator	A local display is provided.	Select decimal separator for displaying numerical values.	▪ . (point) ▪ , (comma)	. (point)
Backlight	One of the following conditions is met: ▪ Order code for "Display; operation", option **F** "4-line, illum.; touch control" ▪ Order code for "Display; operation", option **G** "4-line, illum.; touch control +WLAN"	Switch the local display backlight on and off.	▪ Disable ▪ Enable	Enable

* Visibility depends on order options or device settings

10.5.5 Performing electrode cleaning

The **Electrode cleaning circuit** submenu contains parameters that must be configured for the configuration of electrode cleaning.

The submenu is only available if the device was ordered with electrode cleaning.

Navigation

"Setup" menu → Advanced setup → Electrode cleaning circuit

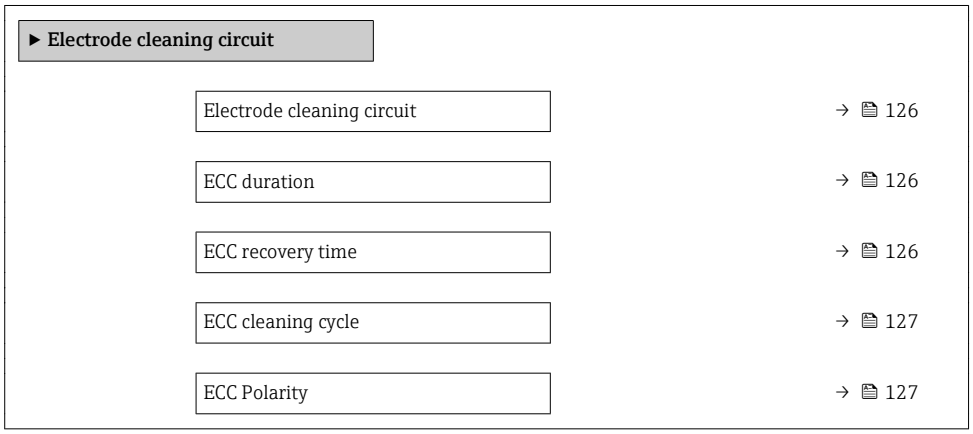

Parameter overview with brief description

Parameter	Prerequisite	Description	Selection / User entry / User interface	Factory setting
Electrode cleaning circuit	For the following order code: "Application package", option **EC** "ECC electrode cleaning"	Enable the cyclic electrode cleaning circuit.	▪ Off ▪ On	Off
ECC duration	For the following order code: "Application package", option **EC** "ECC electrode cleaning"	Enter the duration of electrode cleaning in seconds.	0.01 to 30 s	2 s
ECC recovery time	For the following order code: "Application package", option **EC** "ECC electrode cleaning"	Define recovery time after electrode cleaning. During this time the current output values will be held at last valid value.	1 to 600 s	60 s

Parameter	Prerequisite	Description	Selection / User entry / User interface	Factory setting
ECC cleaning cycle	For the following order code: "Application package", option **EC** "ECC electrode cleaning"	Enter the pause duration between electrode cleaning cycles.	0.5 to 168 h	0.5 h
ECC Polarity	For the following order code: "Application package", option **EC** "ECC electrode cleaning"	Select the polarity of the electrode cleaning circuit.	▪ Positive ▪ Negative	Depends on the electrode material: ▪ Platinum: **Negative** option ▪ Tantalum, Alloy C22, stainless steel: **Positive** option

10.5.6 WLAN configuration

The **WLAN Settings** submenu guides the user systematically through all the parameters that have to be set for the WLAN configuration.

Navigation
"Setup" menu → Advanced setup → WLAN settings

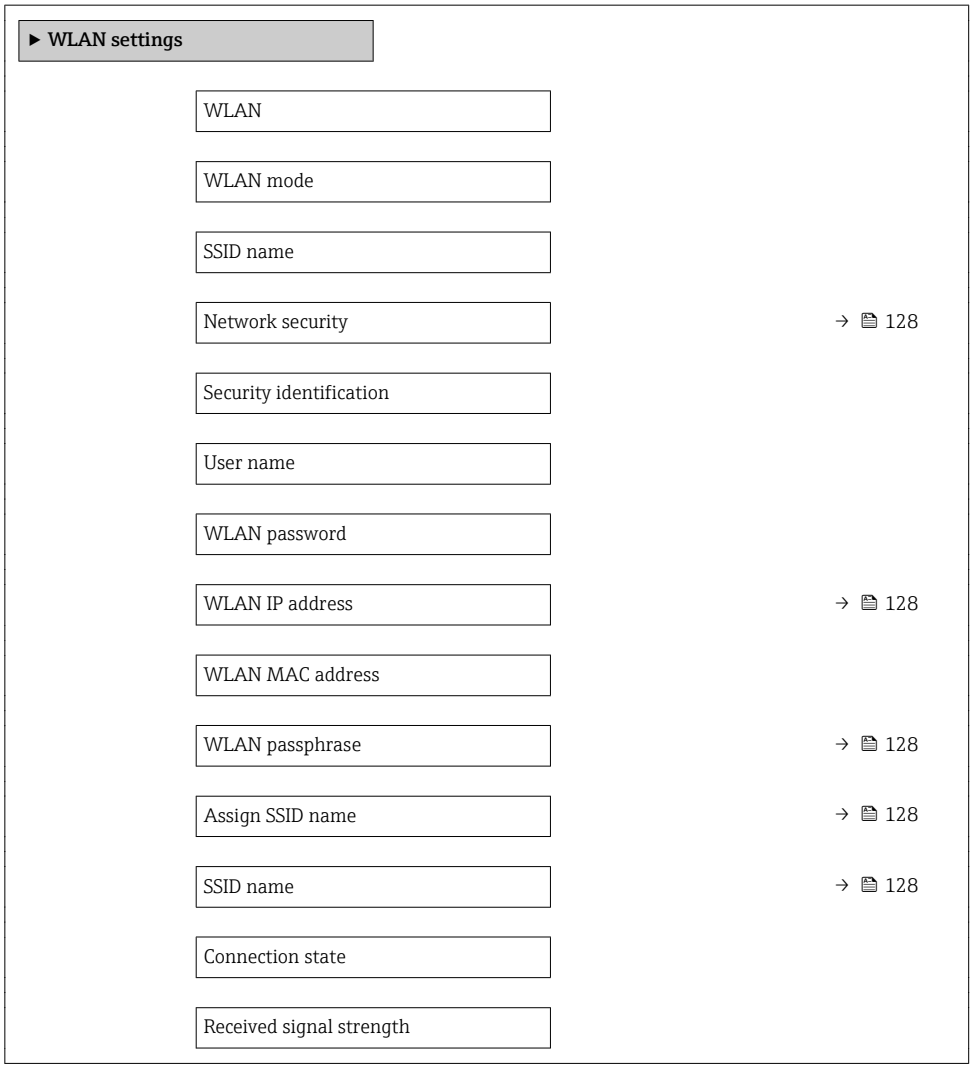

Parameter overview with brief description

Parameter	Prerequisite	Description	User entry / Selection	Factory setting
WLAN IP address	–	Enter IP address of the WLAN interface of the device.	4 octet: 0 to 255 (in the particular octet)	192.168.1.212
Network security	–	Select the security type of the WLAN network.	▪ Unsecured ▪ WPA2-PSK ▪ EAP-PEAP with MSCHAPv2 * ▪ EAP-PEAP MSCHAPv2 no server authentic. * ▪ EAP-TLS *	WPA2-PSK
WLAN passphrase	The **WPA2-PSK** option is selected in the **Security type** parameter.	Enter the network key (8 to 32 characters). The network key supplied with the device should be changed during commissioning for security reasons.	8 to 32-digit character string comprising numbers, letters and special characters (without spaces)	Serial number of the measuring device (e.g. L100A802000)
Assign SSID name	–	Select which name will be used for SSID: device tag or user-defined name.	▪ Device tag ▪ User-defined	User-defined
SSID name	▪ The **User-defined** option is selected in the **Assign SSID name** parameter. ▪ The **WLAN access point** option is selected in the **WLAN mode** parameter.	Enter the user-defined SSID name (max. 32 characters). The user-defined SSID name may only be assigned once. If the SSID name is assigned more than once, the devices can interfere with one another.	Max. 32-digit character string comprising numbers, letters and special characters	EH_device designation_last 7 digits of the serial number (e.g. EH_Promag_500_A802000)
Apply changes	–	Use changed WLAN settings.	▪ Cancel ▪ Ok	Cancel

* Visibility depends on order options or device settings

10.5.7 Configuration management

After commissioning, you can save the current device configurationor restore the previous device configuration.

You can do so using the **Configuration management** parameter and the related options found in the **Configuration backup** submenu.

Navigation
"Setup" menu → Advanced setup → Configuration backup

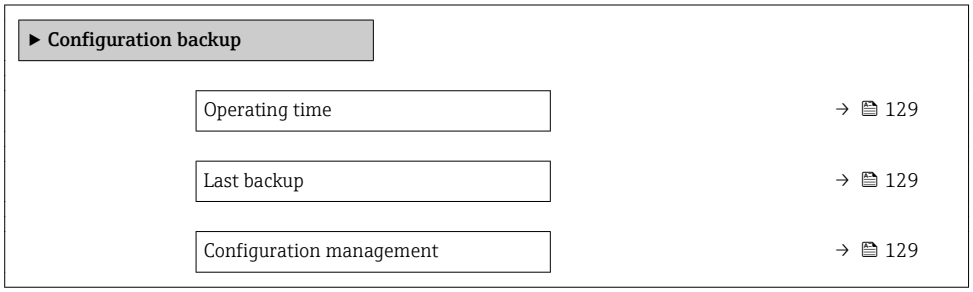

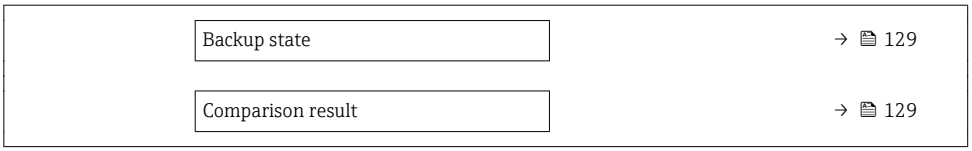

Parameter overview with brief description

Parameter	Description	User interface / Selection	Factory setting
Operating time	Indicates how long the device has been in operation.	Days (d), hours (h), minutes (m) and seconds (s)	–
Last backup	Shows when the last data backup was saved to HistoROM backup.	Days (d), hours (h), minutes (m) and seconds (s)	–
Configuration management	Select action for managing the device data in the HistoROM backup.	▪ Cancel ▪ Execute backup ▪ Restore * ▪ Compare * ▪ Clear backup data	Cancel
Backup state	Shows the current status of data saving or restoring.	▪ None ▪ Backup in progress ▪ Restoring in progress ▪ Delete in progress ▪ Compare in progress ▪ Restoring failed ▪ Backup failed	None
Comparison result	Comparison of current device data with HistoROM backup.	▪ Settings identical ▪ Settings not identical ▪ No backup available ▪ Backup settings corrupt ▪ Check not done ▪ Dataset incompatible	Check not done

* Visibility depends on order options or device settings

Function scope of the "Configuration management" parameter

Options	Description
Cancel	No action is executed and the user exits the parameter.
Execute backup	A backup copy of the current device configuration is saved from the HistoROM backup to the memory of the device. The backup copy includes the transmitter data of the device.
Restore	The last backup copy of the device configuration is restored from the device memory to the device's HistoROM backup. The backup copy includes the transmitter data of the device.
Compare	The device configuration saved in the device memory is compared with the current device configuration of the HistoROM backup.
Clear backup data	The backup copy of the device configuration is deleted from the memory of the device.

HistoROM backup
A HistoROM is a "non-volatile" device memory in the form of an EEPROM.

While this action is in progress, the configuration cannot be edited via the local display and a message on the processing status appears on the display.

10.5.8 Using parameters for device administration

The **Administration** submenu systematically guides the user through all the parameters that can be used for device administration purposes.

Navigation
"Setup" menu → Advanced setup → Administration

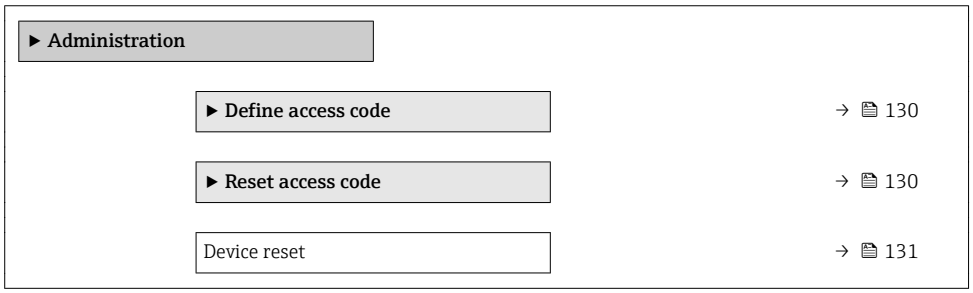

Using the parameter to define the access code

Navigation
"Setup" menu → Advanced setup → Administration → Define access code

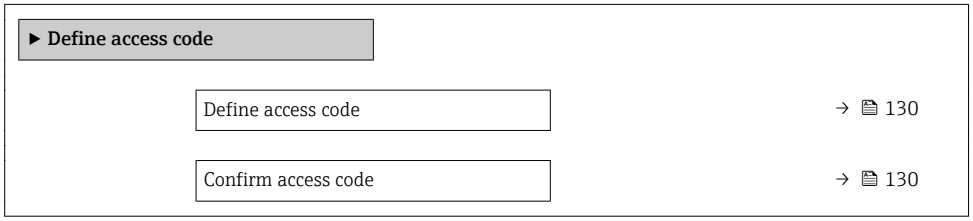

Parameter overview with brief description

Parameter	Description	User entry
Define access code	Restrict write-access to parameters to protect the configuration of the device against unintentional changes.	Max. 16-digit character string comprising numbers, letters and special characters
Confirm access code	Confirm the entered access code.	Max. 16-digit character string comprising numbers, letters and special characters

Using the parameter to reset the access code

Navigation
"Setup" menu → Advanced setup → Administration → Reset access code

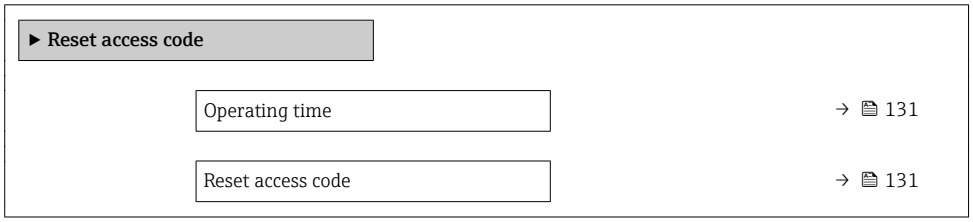

Parameter overview with brief description

Parameter	Description	User interface / User entry	Factory setting
Operating time	Indicates how long the device has been in operation.	Days (d), hours (h), minutes (m) and seconds (s)	–
Reset access code	Reset access code to factory settings. For a reset code, contact your Endress+Hauser service organization. The reset code can only be entered via: ▪ Web browser ▪ DeviceCare, FieldCare (via service interface CDI-RJ45) ▪ Fieldbus	Character string comprising numbers, letters and special characters	0x00

Using the parameter to reset the device

Navigation
"Setup" menu → Advanced setup → Administration

Parameter overview with brief description

Parameter	Description	Selection	Factory setting
Device reset	Reset the device configuration - either entirely or in part - to a defined state.	▪ Cancel ▪ To delivery settings ▪ Restart device ▪ Restore S-DAT backup *	Cancel

* Visibility depends on order options or device settings

10.6 Simulation

The **Simulation** submenu enables you to simulate, without a real flow situation, various process variables in the process and the device alarm mode and to verify downstream signal chains (switching valves or closed-control loops).

Navigation
"Diagnostics" menu → Simulation

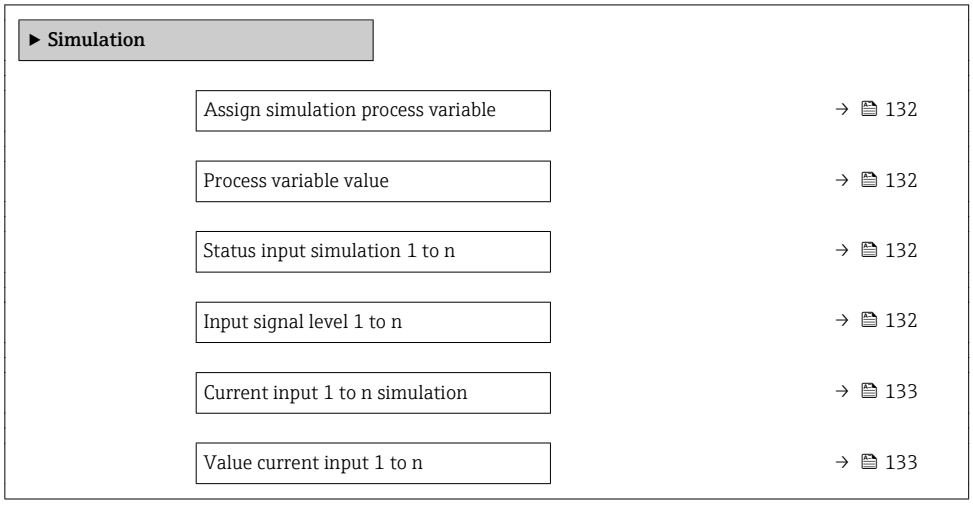

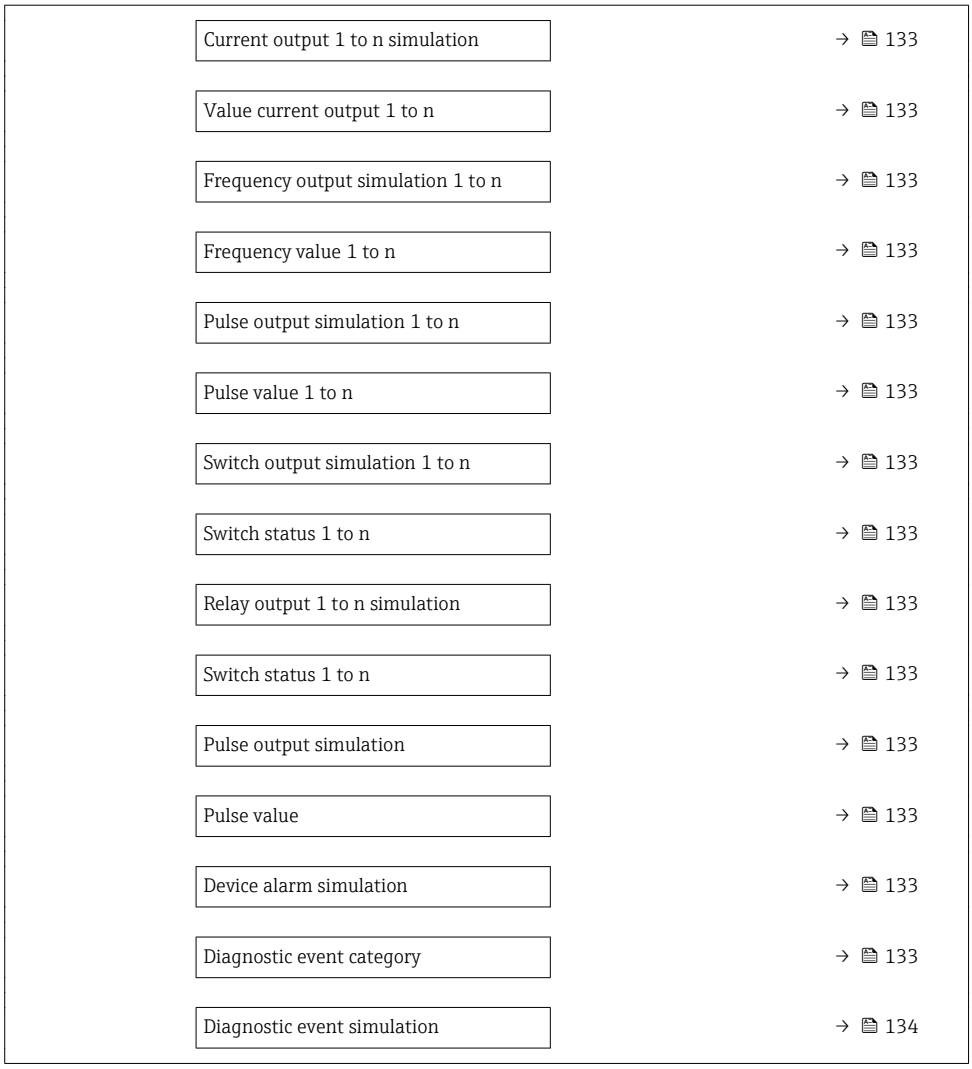

Parameter overview with brief description

Parameter	Prerequisite	Description	Selection / User entry / User interface	Factory setting
Assign simulation process variable	–	Select a process variable for the simulation process that is activated.	▪ Off ▪ Volume flow ▪ Mass flow ▪ Corrected volume flow ▪ Flow velocity ▪ Conductivity *	Off
Process variable value	A process variable is selected in the **Assign simulation process variable** parameter (→ 132).	Enter the simulation value for the selected process variable.	Depends on the process variable selected	0
Status input simulation 1 to n	–	Switch simulation of the status input on and off.	▪ Off ▪ On	Off
Input signal level 1 to n	In the **Status input simulation** parameter, the **On** option is selected.	Select the signal level for the simulation of the status input.	▪ High ▪ Low	High

Parameter	Prerequisite	Description	Selection / User entry / User interface	Factory setting
Current input 1 to n simulation	–	Switch simulation of the current input on and off.	▪ Off ▪ On	Off
Value current input 1 to n	In the **Current input 1 to n simulation** parameter, the **On** option is selected.	Enter the current value for simulation.	0 to 22.5 mA	0 mA
Current output 1 to n simulation	–	Switch the simulation of the current output on and off.	▪ Off ▪ On	Off
Value current output 1 to n	In the **Current output 1 to n simulation** parameter, the **On** option is selected.	Enter the current value for simulation.	3.59 to 22.5 mA	3.59 mA
Frequency output simulation 1 to n	In the **Operating mode** parameter, the **Frequency** option is selected.	Switch the simulation of the frequency output on and off.	▪ Off ▪ On	Off
Frequency value 1 to n	In the **Frequency output simulation 1 to n** parameter, the **On** option is selected.	Enter the frequency value for the simulation.	0.0 to 12 500.0 Hz	0.0 Hz
Pulse output simulation 1 to n	In the **Operating mode** parameter, the **Pulse** option is selected.	Set and switch off the pulse output simulation. For **Fixed value** option: **Pulse width** parameter (→ 106) defines the pulse width of the pulses output.	▪ Off ▪ Fixed value ▪ Down-counting value	Off
Pulse value 1 to n	In the **Pulse output simulation 1 to n** parameter, the **Down-counting value** option is selected.	Enter the number of pulses for simulation.	0 to 65 535	0
Switch output simulation 1 to n	In the **Operating mode** parameter, the **Switch** option is selected.	Switch the simulation of the switch output on and off.	▪ Off ▪ On	Off
Switch status 1 to n	–	Select the status of the status output for the simulation.	▪ Open ▪ Closed	Open
Relay output 1 to n simulation	–	Switch simulation of the relay output on and off.	▪ Off ▪ On	Off
Switch status 1 to n	The **On** option is selected in the **Switch output simulation 1 to n** parameter parameter.	Select status of the relay output for the simulation.	▪ Open ▪ Closed	Open
Pulse output simulation	–	Set and switch off the pulse output simulation. For **Fixed value** option: **Pulse width** parameter defines the pulse width of the pulses output.	▪ Off ▪ Fixed value ▪ Down-counting value	Off
Pulse value	In the **Pulse output simulation** parameter, the **Down-counting value** option is selected.	Set and switch off the pulse output simulation.	0 to 65 535	0
Device alarm simulation	–	Switch the device alarm on and off.	▪ Off ▪ On	Off
Diagnostic event category	–	Select a diagnostic event category.	▪ Sensor ▪ Electronics ▪ Configuration ▪ Process	Process

Parameter	Prerequisite	Description	Selection / User entry / User interface	Factory setting
Diagnostic event simulation	–	Select a diagnostic event to simulate this event.	▪ Off ▪ Diagnostic event picklist (depends on the category selected)	Off
Logging interval	–	Define the logging interval tlog for data logging. This value defines the time interval between the individual data points in the memory.	1.0 to 3 600.0 s	–

* Visibility depends on order options or device settings

10.7 Protecting settings from unauthorized access

The following write protection options exist in order to protect the configuration of the measuring device from unintentional modification:
- Protect access to parameters via access code → 134
- Protect access to local operation via key locking → 77
- Protect access to measuring device via write protection switch → 135

10.7.1 Write protection via access code

The effects of the user-specific access code are as follows:
- Via local operation, the parameters for the measuring device configuration are write-protected and their values can no longer be changed.
- Device access is protected via the Web browser, as are the parameters for the measuring device configuration.
- Device access is protected via FieldCare or DeviceCare (via CDI-RJ45 service interface), as are the parameters for the measuring device configuration.

Defining the access code via local display

1. Navigate to the **Define access code** parameter (→ 130).
2. Define a max. 16-digit character string comprising numbers, letters and special characters as the access code.
3. Enter the access code again in the **Confirm access code** parameter (→ 130) to confirm the code.
   ↳ The -symbol appears in front of all write-protected parameters.

The device automatically locks the write-protected parameters again if a key is not pressed for 10 minutes in the navigation and editing view. The device locks the write-protected parameters automatically after 60 s if the user skips back to the operational display mode from the navigation and editing view.

- If parameter write protection is activated via an access code, it can also only be deactivated via this access code → 76.
- The user role with which the user is currently logged on via the local display → 76 is indicated by the **Access status** parameter. Navigation path: Operation → Access status

Parameters which can always be modified via the local display

Certain parameters that do not affect the measurement are excepted from parameter write protection via the local display. Despite the user-specific access code, they can always be modified, even if the other parameters are locked.

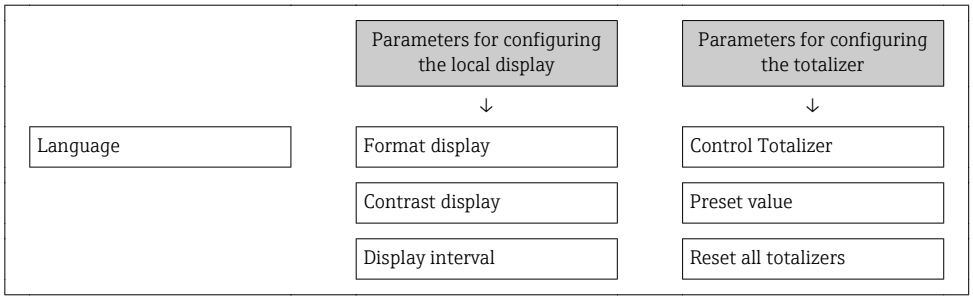

Defining the access code via the Web browser

1. Navigate to the **Define access code** parameter (→ 130).
2. Define a max. 16-digit numeric code as an access code.
3. Enter the access code again in the **Confirm access code** parameter (→ 130) to confirm the code.
   ↳ The Web browser switches to the login page.

If no action is performed for 10 minutes, the Web browser automatically returns to the login page.

- If parameter write protection is activated via an access code, it can also only be deactivated via this access code → 76.
- The user role with which the user is currently logged on via Web browser is indicated by the **Access status** parameter. Navigation path: Operation → Access status

Resetting the access code

If you misplace the user-specific access code, it is possible to reset the code to the factory setting. A reset code must be entered for this purpose. The user-specific access code can then be defined again afterwards.

Via Web browser, FieldCare, DeviceCare (via CDI-RJ45 service interface), fieldbus

For a reset code, contact your Endress+Hauser service organization.

1. Navigate to the **Reset access code** parameter (→ 131).
2. Enter the reset code.
   ↳ The access code has been reset to the factory setting **0000**. It can be redefined → 134.

10.7.2 Write protection via write protection switch

Unlike parameter write protection via a user-specific access code, this allows write access to the entire operating menu - except for the **"Contrast display" parameter** - to be locked.

The parameter values are now read only and cannot be edited any more (exception **"Contrast display" parameter**):
- Via local display
- Via HART protocol

Proline 500 – digital

WARNING

Excessive tightening torque applied to the fixing screws!
Risk of damaging the plastic transmitter.
► Tighten the fixing screws as per the tightening torque: 2 Nm (1.5 lbf ft)

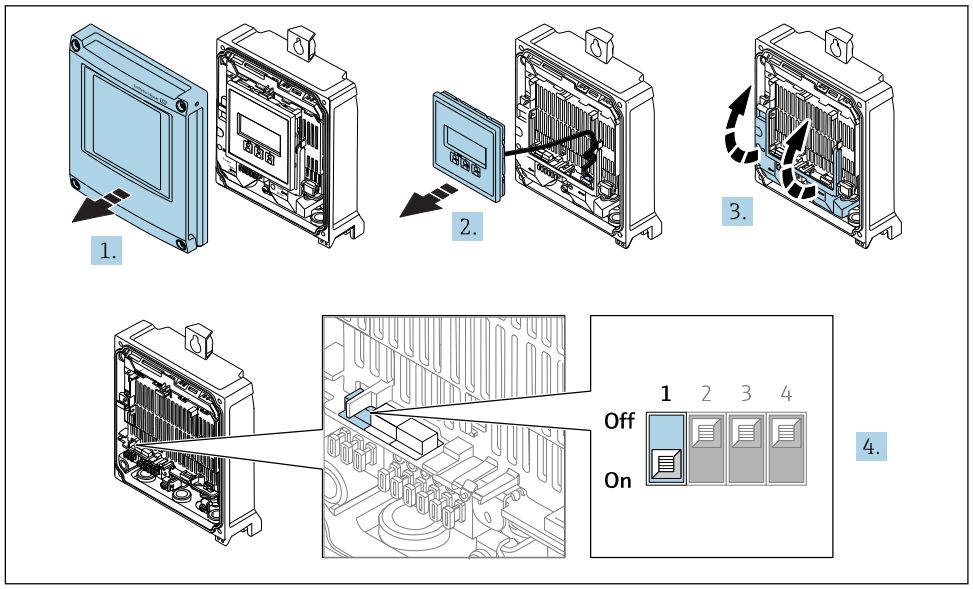

1. Open the housing cover.
2. Remove the display module.
3. Fold open the terminal cover.
4. Setting the write protection (WP) switch on the main electronics module to the **ON** position enables hardware write protection.
   ↳ In the **Locking status** parameter the **Hardware locked** option is displayed → 138. In addition, on the local display the -symbol appears in front of the parameters in the header of the operational display and in the navigation view.

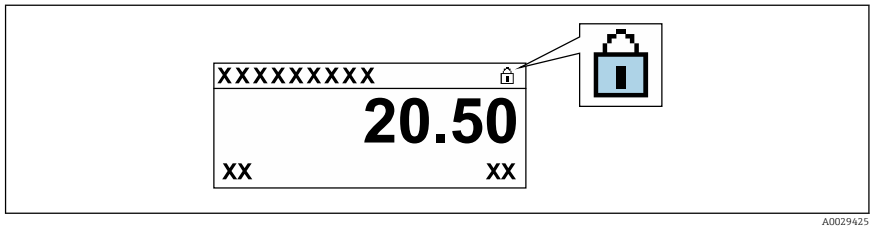

5. Setting the write protection (WP) switch on the main electronics module to the **OFF** position (factory setting) disables hardware write protection.
   ↳ No option is displayed in the **Locking status** parameter → 138. On the local display, the -symbol disappears from in front of the parameters in the header of the operational display and in the navigation view.

Proline 500

1.

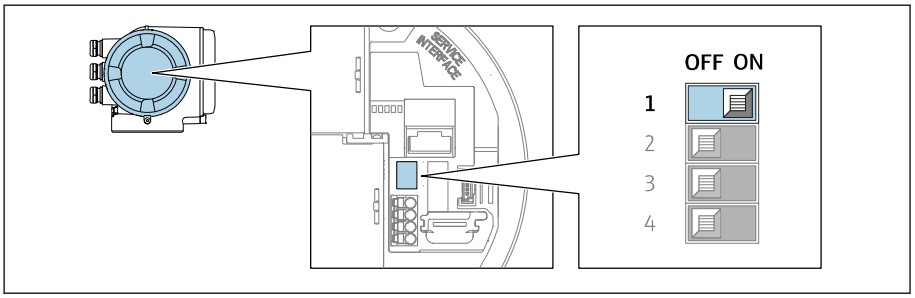

Setting the write protection (WP) switch on the main electronics module to the **ON** position enables hardware write protection.

↳ In the **Locking status** parameter the **Hardware locked** option is displayed → 138. In addition, on the local display the -symbol appears in front of the parameters in the header of the operational display and in the navigation view.

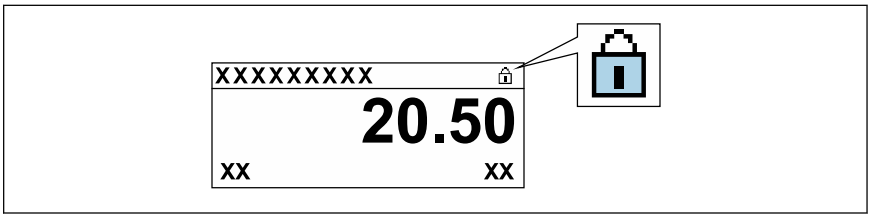

2. Setting the write protection (WP) switch on the main electronics module to the **OFF** position (factory setting) disables hardware write protection.

↳ No option is displayed in the **Locking status** parameter → 138. On the local display, the -symbol disappears from in front of the parameters in the header of the operational display and in the navigation view.

11 Operation

11.1 Reading the device locking status

Device active write protection: **Locking status** parameter

Operation → Locking status

Function scope of the "Locking status" parameter

Options	Description
None	The access status displayed in the **Access status** parameter applies → 📄 76. Only appears on local display.
Hardware locked	The DIP switch for hardware locking is activated on the PCB board. This locks write access to the parameters (e.g. via local display or operating tool) → 📄 135.
SIL locked	The SIL mode is enabled. This locks write access to the parameters (e.g. via local display or operating tool).
Temporarily locked	Write access to the parameters is temporarily locked on account of internal processes running in the device (e.g. data upload/download, reset etc.). Once the internal processing has been completed, the parameters can be changed once again.

11.2 Adjusting the operating language

Detailed information:
- To configure the operating language → 📄 95
- For information on the operating languages supported by the measuring device → 📄 201

11.3 Configuring the display

Detailed information:
- On the basic settings for the local display → 📄 111
- On the advanced settings for the local display → 📄 123

11.4 Reading measured values

With the **Measured values** submenu, it is possible to read all the measured values.

11.4.1 "Process variables" submenu

The **Process variables** submenu contains all the parameters needed to display the current measured values for each process variable.

Navigation
"Diagnostics" menu → Measured values → Process variables

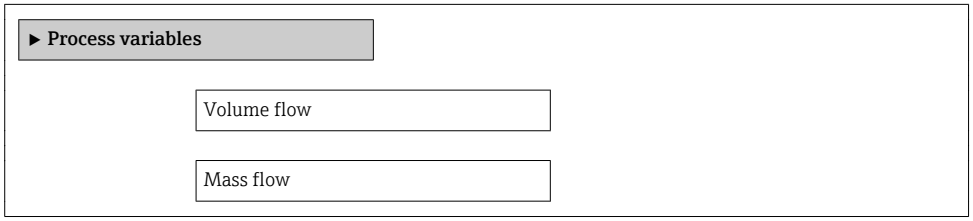

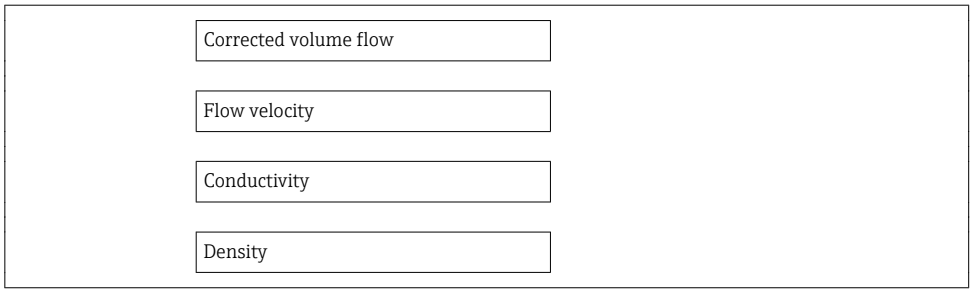

Parameter overview with brief description

Parameter	Description	User interface
Volume flow	Displays the volume flow that is currently measured. *Dependency* The unit is taken from the **Volume flow unit** parameter (→ 🖹 98).	Signed floating-point number
Mass flow	Displays the mass flow currently calculated. *Dependency* The unit is taken from the **Mass flow unit** parameter (→ 🖹 98).	Signed floating-point number
Corrected volume flow	Displays the corrected volume flow that is currently calculated. *Dependency* The unit is taken from the **Corrected volume flow unit** parameter (→ 🖹 99).	Signed floating-point number
Flow velocity	Displays the flow velocity that is currently calculated.	Signed floating-point number
Conductivity	Displays the conductivity that is currently measured. *Dependency* The unit is taken from the **Conductivity unit** parameter (→ 🖹 98).	Signed floating-point number
Density	Displays the current fixed density or density read in from an external device. *Dependency* The unit is taken from the **Density unit** parameter.	Signed floating-point number

11.4.2 "Totalizer" submenu

The **Totalizer** submenu contains all the parameters needed to display the current measured values for every totalizer.

Navigation

"Diagnostics" menu → Measured values → Totalizer

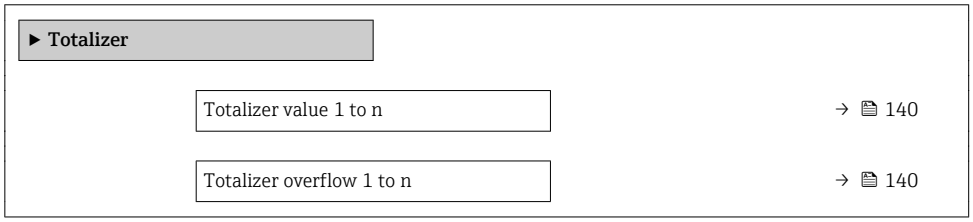

Parameter overview with brief description

Parameter	Prerequisite	Description	User interface
Totalizer value 1 to n	A process variable is selected in the **Assign process variable** parameter (→ 122) of the **Totalizer 1 to n** submenu.	Displays the current totalizer counter value.	Signed floating-point number
Totalizer overflow 1 to n	A process variable is selected in the **Assign process variable** parameter (→ 122) of the **Totalizer 1 to n** submenu.	Displays the current totalizer overflow.	Integer with sign

11.4.3 "Input values" submenu

The **Input values** submenu guides you systematically to the individual input values.

Navigation

"Diagnostics" menu → Measured values → Input values

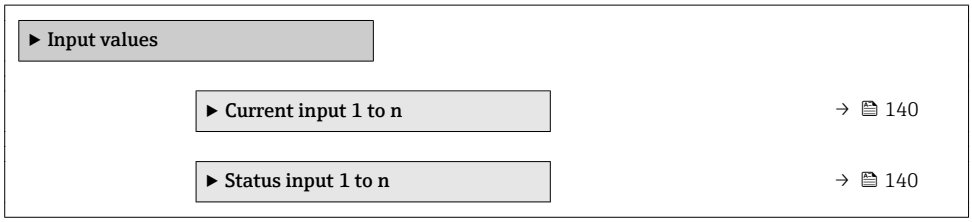

Input values of current input

The **Current input 1 to n** submenu contains all the parameters needed to display the current measured values for every current input.

Navigation

"Diagnostics" menu → Measured values → Input values → Current input 1 to n

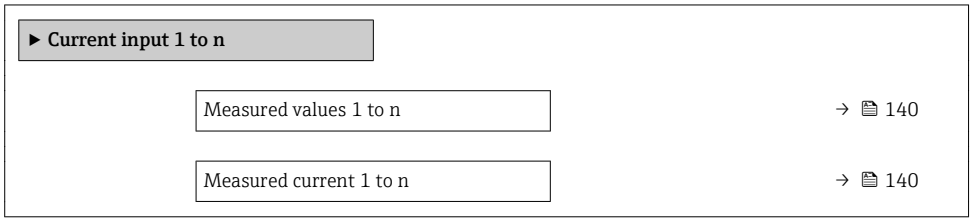

Parameter overview with brief description

Parameter	Description	User interface
Measured values 1 to n	Displays the current input value.	Signed floating-point number
Measured current 1 to n	Displays the current value of the current input.	0 to 22.5 mA

Input values of status input

The **Status input 1 to n** submenu contains all the parameters needed to display the current measured values for every status input.

Navigation
"Diagnostics" menu → Measured values → Input values → Status input 1 to n

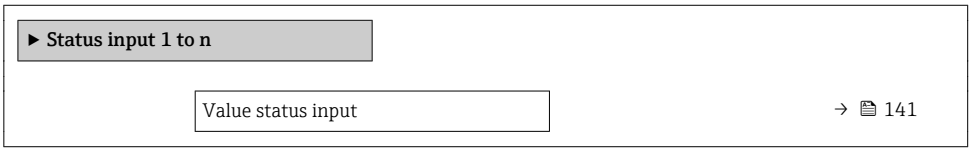

Parameter overview with brief description

Parameter	Description	User interface
Value status input	Shows the current input signal level.	▪ High ▪ Low

11.4.4 Output values

The **Output values** submenu contains all the parameters needed to display the current measured values for every output.

Navigation
"Diagnostics" menu → Measured values → Output values

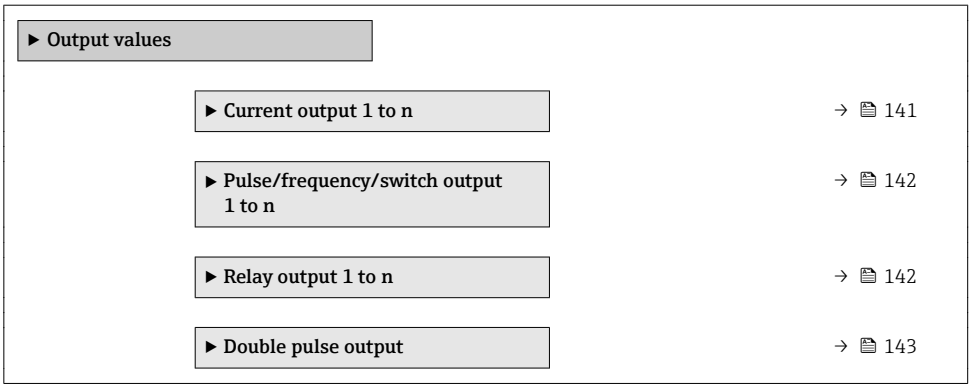

Output values of current output

The **Value current output** submenu contains all the parameters needed to display the current measured values for every current output.

Navigation
"Diagnostics" menu → Measured values → Output values → Value current output 1 to n

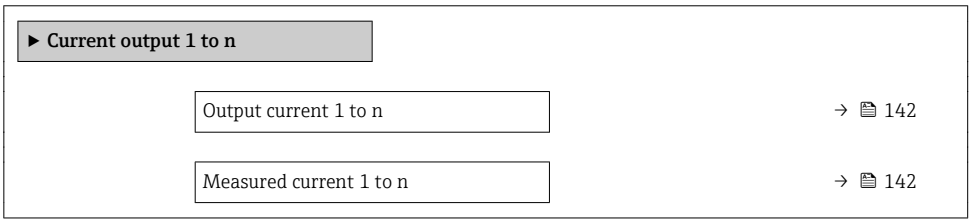

Parameter overview with brief description

Parameter	Description	User interface
Output current 1	Displays the current value currently calculated for the current output.	3.59 to 22.5 mA
Measured current	Displays the current value currently measured for the current output.	0 to 30 mA

Output values for pulse/frequency/switch output

The **Pulse/frequency/switch output 1 to n** submenu contains all the parameters needed to display the current measured values for every pulse/frequency/switch output.

Navigation

"Diagnostics" menu → Measured values → Output values → Pulse/frequency/switch output 1 to n

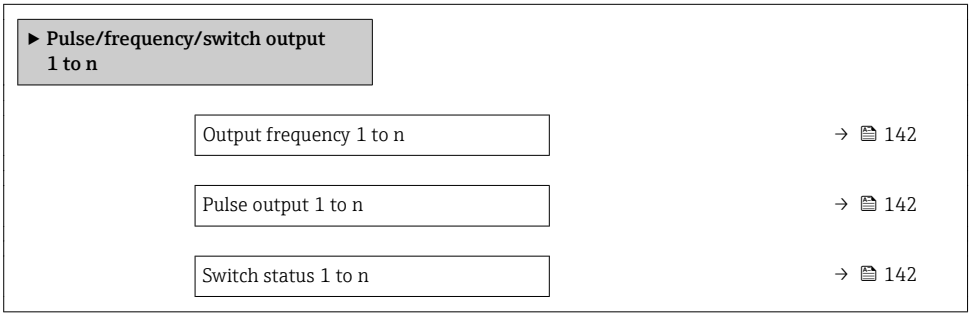

Parameter overview with brief description

Parameter	Prerequisite	Description	User interface
Output frequency 1 to n	In the **Operating mode** parameter, the **Frequency** option is selected.	Displays the value currently measured for the frequency output.	0.0 to 12 500.0 Hz
Pulse output 1 to n	The **Pulse** option is selected in the **Operating mode** parameter parameter.	Displays the pulse frequency currently output.	Positive floating-point number
Switch status 1 to n	The **Switch** option is selected in the **Operating mode** parameter.	Displays the current switch output status.	▪ Open ▪ Closed

Output values for relay output

The **Relay output 1 to n** submenu contains all the parameters needed to display the current measured values for every relay output.

Navigation

"Diagnostics" menu → Measured values → Output values → Relay output 1 to n

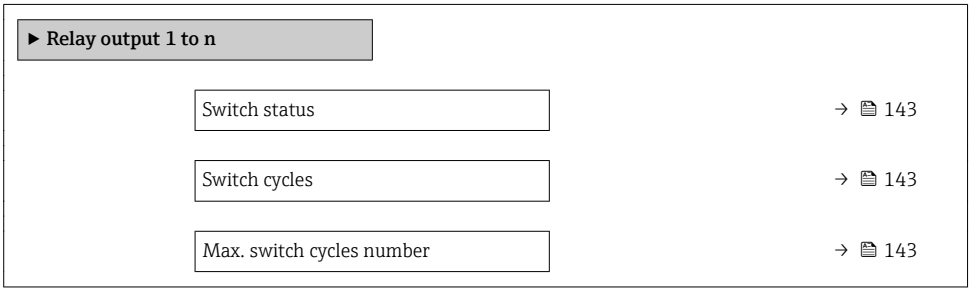

Parameter overview with brief description

Parameter	Description	User interface
Switch status	Shows the current relay switch status.	▪ Open ▪ Closed
Switch cycles	Shows number of all performed switch cycles.	Positive integer
Max. switch cycles number	Shows the maximal number of guaranteed switch cycles.	Positive integer

Output values for double pulse output

The **Double pulse output** submenu contains all the parameters needed to display the current measured values for every double pulse output.

Navigation
"Diagnostics" menu → Measured values → Output values → Double pulse output

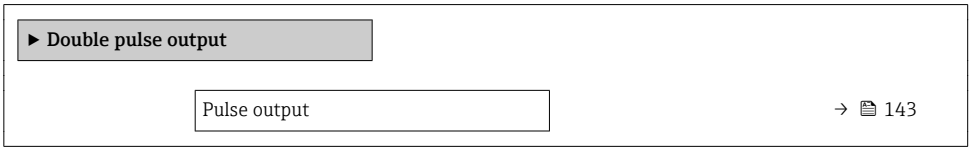

Parameter overview with brief description

Parameter	Description	User interface
Pulse output	Shows the currently output pulse frequency.	Positive floating-point number

11.5 Adapting the measuring device to the process conditions

The following are available for this purpose:
- Basic settings using the**Setup** menu (→ 95)
- Advanced settings using the**Advanced setup** submenu (→ 120)

11.6 Performing a totalizer reset

The totalizers are reset in the **Operation** submenu:
- Control Totalizer
- Reset all totalizers

Navigation
"Operation" menu → Totalizer handling

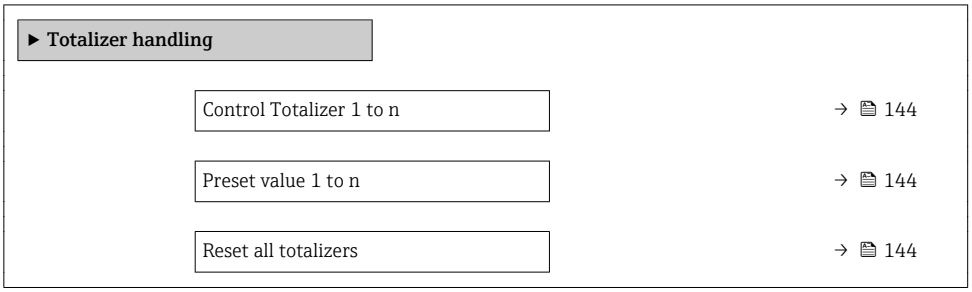

Parameter overview with brief description

Parameter	Prerequisite	Description	Selection / User entry	Factory setting
Control Totalizer 1 to n	A process variable is selected in the **Assign process variable** parameter (→ 122) of the **Totalizer 1 to n** submenu.	Control totalizer value.	▪ Totalize ▪ Reset + hold * ▪ Preset + hold * ▪ Reset + totalize ▪ Preset + totalize * ▪ Hold *	Totalize
Preset value 1 to n	A process variable is selected in the **Assign process variable** parameter (→ 122) of the **Totalizer 1 to n** submenu.	Specify start value for totalizer. *Dependency* The unit of the selected process variable is specified for the totalizer in the **Unit totalizer** parameter (→ 122).	Signed floating-point number	0 l
Reset all totalizers	–	Reset all totalizers to 0 and start.	▪ Cancel ▪ Reset + totalize	Cancel

* Visibility depends on order options or device settings

11.6.1 Function scope of the "Control Totalizer" parameter

Options	Description
Totalize	The totalizer is started or continues running.
Reset + hold	The totaling process is stopped and the totalizer is reset to 0.
Preset + hold	The totaling process is stopped and the totalizer is set to its defined start value from the **Preset value** parameter.
Reset + totalize	The totalizer is reset to 0 and the totaling process is restarted.
Preset + totalize	The totalizer is set to the defined start value from the **Preset value** parameter and the totaling process is restarted.
Hold	Totalizing is stopped.

11.6.2 Function scope of the "Reset all totalizers" parameter

Options	Description
Cancel	No action is executed and the user exits the parameter.
Reset + totalize	Resets all totalizers to 0 and restarts the totaling process. This deletes all the flow values previously totalized.

11.7 Showing data logging

The **Extended HistoROM** application package must be enabled in the device (order option) for the **Data logging** submenu to appear. This contains all the parameters for the measured value history.

Data logging is also available via:
- Plant Asset Management Tool FieldCare → 88.
- Web browser

Function range
- A total of 1000 measured values can be stored
- 4 logging channels
- Adjustable logging interval for data logging
- Displays the measured value trend for each logging channel in the form of a chart

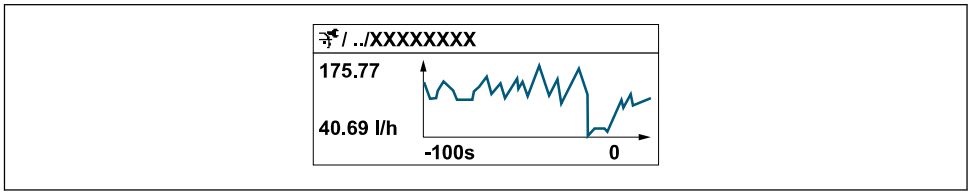

- x-axis: depending on the number of channels selected displays 250 to 1000 measured values of a process variable.
- y-axis: displays the approximate measured value span and constantly adapts this to the ongoing measurement.

If the length of the logging interval or the assignment of the process variables to the channels is changed, the content of the data logging is deleted.

Navigation
"Diagnostics" menu → Data logging

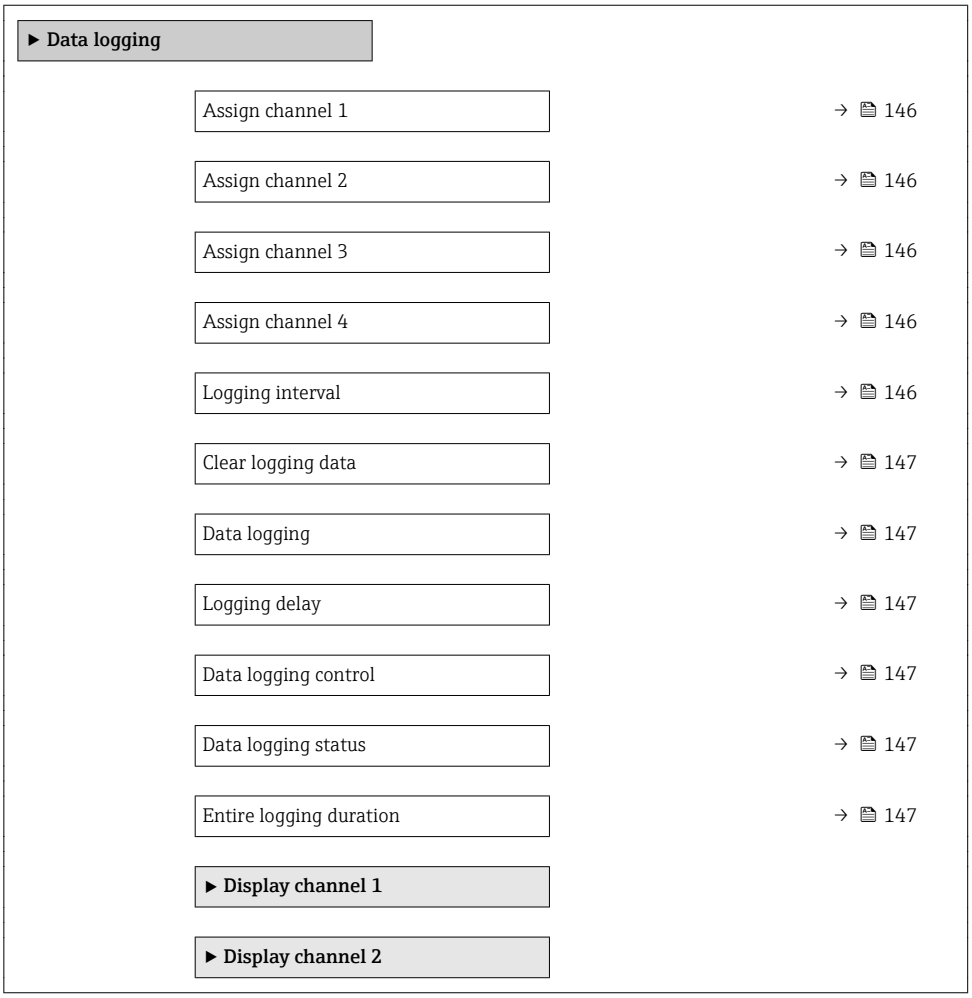

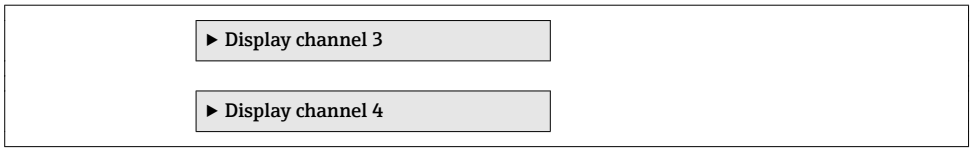

Parameter overview with brief description

Parameter	Prerequisite	Description	Selection / User entry / User interface	Factory setting
Assign channel 1	The **Extended HistoROM** application package is available.	Assign process variable to logging channel.	▪ Off ▪ Volume flow ▪ Mass flow ▪ Corrected volume flow ▪ Flow velocity ▪ Conductivity * ▪ Electronic temperature ▪ Current output 1 * ▪ Current output 2 * ▪ Current output 3 * ▪ Current output 4 * ▪ Noise * ▪ Coil current shot time * ▪ Reference electrode potential against PE * ▪ Coating measured value * ▪ Test point 1 ▪ Test point 2 ▪ Test point 3	Off
Assign channel 2	The **Extended HistoROM** application package is available. The software options currently enabled are displayed in the **Software option overview** parameter.	Assign process variable to logging channel.	Picklist, see **Assign channel 1** parameter (→ 146)	Off
Assign channel 3	The **Extended HistoROM** application package is available. The software options currently enabled are displayed in the **Software option overview** parameter.	Assign process variable to logging channel.	Picklist, see **Assign channel 1** parameter (→ 146)	Off
Assign channel 4	The **Extended HistoROM** application package is available. The software options currently enabled are displayed in the **Software option overview** parameter.	Assign process variable to logging channel.	Picklist, see **Assign channel 1** parameter (→ 146)	Off
Logging interval	The **Extended HistoROM** application package is available.	Define the logging interval for data logging. This value defines the time interval between the individual data points in the memory.	0.1 to 3 600.0 s	1.0 s

Parameter	Prerequisite	Description	Selection / User entry / User interface	Factory setting
Clear logging data	The **Extended HistoROM** application package is available.	Clear the entire logging data.	▪ Cancel ▪ Clear data	Cancel
Data logging	–	Select the data logging method.	▪ Overwriting ▪ Not overwriting	Overwriting
Logging delay	In the **Data logging** parameter, the **Not overwriting** option is selected.	Enter the time delay for measured value logging.	0 to 999 h	0 h
Data logging control	In the **Data logging** parameter, the **Not overwriting** option is selected.	Start and stop measured value logging.	▪ None ▪ Delete + start ▪ Stop	None
Data logging status	In the **Data logging** parameter, the **Not overwriting** option is selected.	Displays the measured value logging status.	▪ Done ▪ Delay active ▪ Active ▪ Stopped	Done
Entire logging duration	In the **Data logging** parameter, the **Not overwriting** option is selected.	Displays the total logging duration.	Positive floating-point number	0 s

* Visibility depends on order options or device settings

12 Diagnostics and troubleshooting

12.1 General troubleshooting

For local display

Error	Possible causes	Solution
Local display dark and no output signals	Supply voltage does not match the value indicated on the nameplate.	Apply the correct supply voltage .
Local display dark and no output signals	The polarity of the supply voltage is wrong.	Correct the polarity.
Local display dark and no output signals	No contact between connecting cables and terminals.	Check the connection of the cables and correct if necessary.
Local display dark and no output signals	Terminals are not plugged into the I/O electronics module correctly. Terminals are not plugged into the main electronics module correctly.	Check terminals.
Local display dark and no output signals	I/O electronics module is defective. Main electronics module is defective.	Order spare part → 174.
Local display dark and no output signals	The connector between the main electronics module and display module is not plugged in correctly.	Check the connection and correct if necessary.
Local display dark and no output signals	The connecting cable is not plugged in correctly.	1. Check the connection of the electrode cable and correct if necessary. 2. Check the connection of the coil current cable and correct if necessary.
Local display is dark, but signal output is within the valid range	Display is set too bright or too dark.	▪ Set the display brighter by simultaneously pressing ⊞ + Ⓔ. ▪ Set the display darker by simultaneously pressing ⊟ + Ⓔ.
Local display is dark, but signal output is within the valid range	The cable of the display module is not plugged in correctly.	Insert the plug correctly into the main electronics module and display module.
Local display is dark, but signal output is within the valid range	Display module is defective.	Order spare part → 174.
Backlighting of local display is red	Diagnostic event with "Alarm" diagnostic behavior has occurred.	Take remedial measures → 160
Text on local display appears in a foreign language and cannot be understood.	Incorrect operating language is configured.	1. Press ⊟ + ⊞ for 2 s ("home position"). 2. Press Ⓔ. 3. Set the desired language in the **Display language** parameter (→ 125).
Message on local display: "Communication Error" "Check Electronics"	Communication between the display module and the electronics is interrupted.	▪ Check the cable and the connector between the main electronics module and display module. ▪ Order spare part → 174.

For output signals

Error	Possible causes	Solution
Signal output outside the valid range	Main electronics module is defective.	Order spare part → 🖹 174.
Signal output outside the valid current range (< 3.6 mA or > 22 mA)	Main electronics module is defective. I/O electronics module is defective.	Order spare part → 🖹 174.
Device shows correct value on local display, but signal output is incorrect, though in the valid range.	Configuration error	Check and correct the parameter configuration.
Device measures incorrectly.	Configuration error or device is operated outside the application.	1. Check and correct parameter configuration. 2. Observe limit values specified in the "Technical Data".

For access

Error	Possible causes	Solution
No write access to parameters	Hardware write protection enabled	Set the write protection switch on main electronics module to the **OFF** position → 🖹 135.
No write access to parameters	Current user role has limited access authorization	1. Check user role → 🖹 76. 2. Enter correct customer-specific access code → 🖹 76.
No connection via HART protocol	Communication resistor missing or incorrectly installed.	Install the communication resistor (250 Ω) correctly. Observe the maximum load → 🖹 184.
No connection via HART protocol	Commubox ▪ Connected incorrectly ▪ Configured incorrectly ▪ Drivers not installed correctly ▪ USB interface on computer configured incorrectly	Observe the documentation for the Commubox. FXA195 HART: Document "Technical Information" TI00404F
Not connecting to Web server	Web server disabled	Using the "FieldCare" or "DeviceCare" operating tool, check whether the Web server of the measuring device is enabled, and enable it if necessary→ 🖹 83.
	Incorrect setting for the Ethernet interface of the computer	1. Check the properties of the Internet protocol (TCP/IP) → 🖹 79→ 🖹 79. 2. Check the network settings with the IT manager.
Not connecting to Web server	Incorrect IP address	Check the IP address: 192.168.1.212 → 🖹 79→ 🖹 79
Not connecting to Web server	Incorrect WLAN access data	▪ Check WLAN network status. ▪ Log on to the device again using WLAN access data. ▪ Verify that WLAN is enabled on the measuring device and operating device → 🖹 79.
	WLAN communication disabled	–
Not connecting to Web server, FieldCare or DeviceCare	No WLAN network available	▪ Check if WLAN reception is present: LED on display module is lit blue ▪ Check if WLAN connection is enabled: LED on display module flashes blue ▪ Switch on instrument function.

Error	Possible causes	Solution
Network connection not present or unstable	WLAN network is weak.	▪ Operating device is outside of reception range: Check network status on operating device. ▪ To improve network performance, use an external WLAN antenna.
	Parallel WLAN and Ethernet communication	▪ Check network settings. ▪ Temporarily enable only the WLAN as an interface.
Web browser frozen and operation no longer possible	Data transfer active	Wait until data transfer or current action is finished.
	Connection lost	1. Check cable connection and power supply. 2. Refresh the Web browser and restart if necessary.
Content of Web browser incomplete or difficult to read	Not using optimum version of Web server.	1. Use the correct Web browser version → 🖹 78. 2. Clear the Web browser cache and restart the Web browser.
	Unsuitable view settings.	Change the font size/display ratio of the Web browser.
No or incomplete display of contents in the Web browser	▪ JavaScript not enabled ▪ JavaScript cannot be enabled	1. Enable JavaScript. 2. Enter http://XXX.XXX.X.XXX/basic.html as the IP address.
Operation with FieldCare or DeviceCare via CDI-RJ45 service interface (port 8000)	Firewall of computer or network is preventing communication	Depending on the settings of the firewall used on the computer or in the network, the firewall must be adapted or disabled to allow FieldCare/DeviceCare access.
Flashing of firmware with FieldCare or DeviceCare via CDI-RJ45 service interface (via port 8000 or TFTP ports)	Firewall of computer or network is preventing communication	Depending on the settings of the firewall used on the computer or in the network, the firewall must be adapted or disabled to allow FieldCare/DeviceCare access.

12.2 Diagnostic information via light emitting diodes

12.2.1 Transmitter

Proline 500 – digital

Different LEDs in the transmitter provide information on the device status.

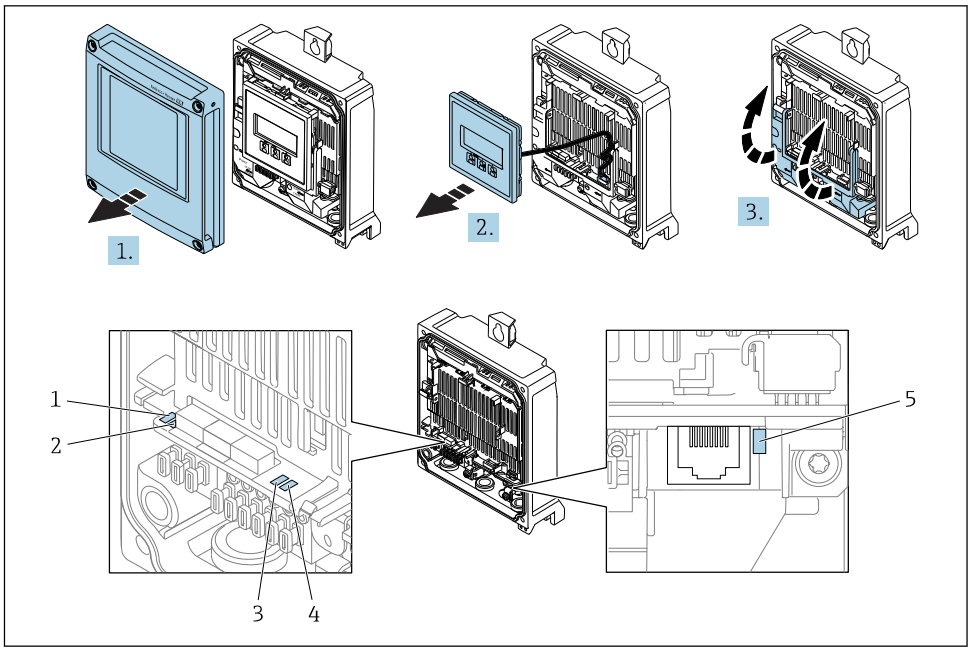

1 Supply voltage
2 Device status
3 Not used
4 Communication
5 Service interface (CDI) active

1. Open the housing cover.
2. Remove the display module.
3. Fold open the terminal cover.

LED		Color	Meaning
1	Supply voltage	Off	Supply voltage is off or too low.
		Green	Supply voltage is ok.
2	Device status (normal operation)	Off	Firmware error
		Green	Device status is ok.
		Flashing green	Device is not configured.
		Flashing red	A diagnostic event with "Warning" diagnostic behavior has occurred.
		Red	A diagnostic event with "Alarm" diagnostic behavior has occurred.
		Flashing red/green	The device restarts.
2	Device status (during start-up)	Flashes red slowly	If > 30 seconds: problem with the boot loader.
		Flashes red quickly	If > 30 seconds: compatibility problem when reading the firmware.
3	Not used	–	–
4	Communication	Off	Communication not active.
		White	Communication active.
5	Service interface (CDI)	Off	Not connected or no connection established.
		Yellow	Connected and connection established.
		Flashing yellow	Service interface active.

Proline 500

Different LEDs in the transmitter provide information on the device status.

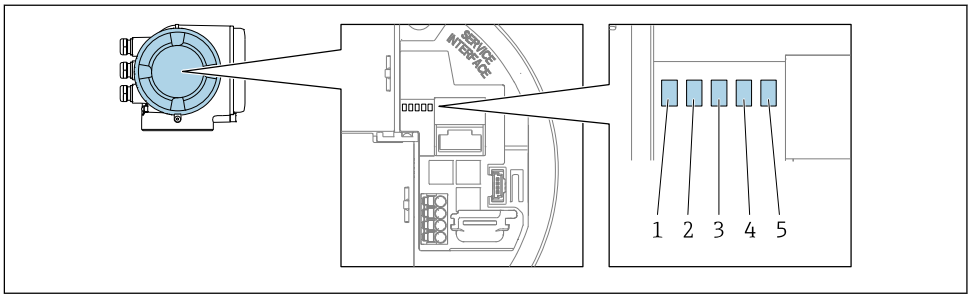

1 *Supply voltage*
2 *Device status*
3 *Not used*
4 *Communication*
5 *Service interface (CDI) active*

LED		Color	Meaning
1	Supply voltage	Off	Supply voltage is off or too low.
		Green	Supply voltage is ok.
2	Device status (normal operation)	Off	Firmware error
		Green	Device status is ok.
		Flashing green	Device is not configured.
		Red	A diagnostic event with "Alarm" diagnostic behavior has occurred.
		Flashing red	A diagnostic event with "Warning" diagnostic behavior has occurred.
		Flashing red/green	The device restarts.
2	Device status (during start-up)	Flashes red slowly	If > 30 seconds: problem with the boot loader.
		Flashes red quickly	If > 30 seconds: compatibility problem when reading the firmware.
3	Not used	–	–
4	Communication	Off	Communication not active.
		White	Communication active.
5	Service interface (CDI)	Off	Not connected or no connection established.
		Yellow	Connected and connection established.
		Flashing yellow	Service interface active.

12.2.2 Sensor connection housing

Proline 500 – digital

Various light emitting diodes (LED) on the ISEM electronics (Intelligent Sensor Electronic Module) in the sensor connection housing provide information on the device status.

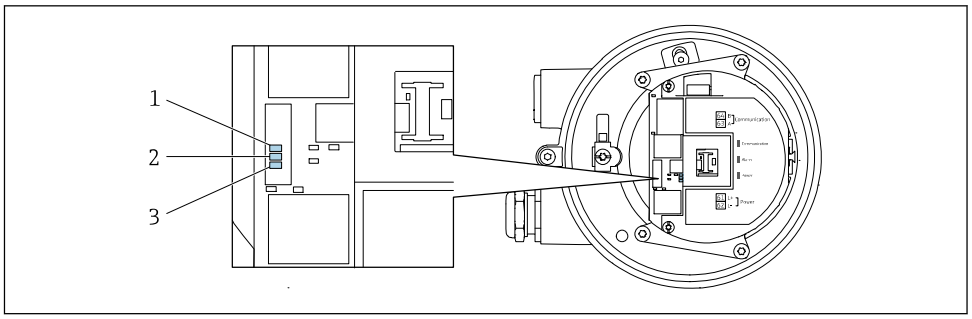

A0029699

1 Communication
2 Device status
3 Supply voltage

LED		Color	Meaning
1	Communication	White	Communication active.
2	Device status (normal operation)	Red	Problem
		Flashing red	Warning
2	Device status (during start-up)	Flashes red slowly	If > 30 seconds: problem with the boot loader.
		Flashes red quickly	If > 30 seconds: compatibility problem when reading the firmware.
3	Supply voltage	Green	Supply voltage is ok.
		Off	Supply voltage is off or too low.

12.3 Diagnostic information on local display

12.3.1 Diagnostic message

Faults detected by the self-monitoring system of the measuring device are displayed as a diagnostic message in alternation with the operational display.

Operational display in alarm condition	Diagnostic message

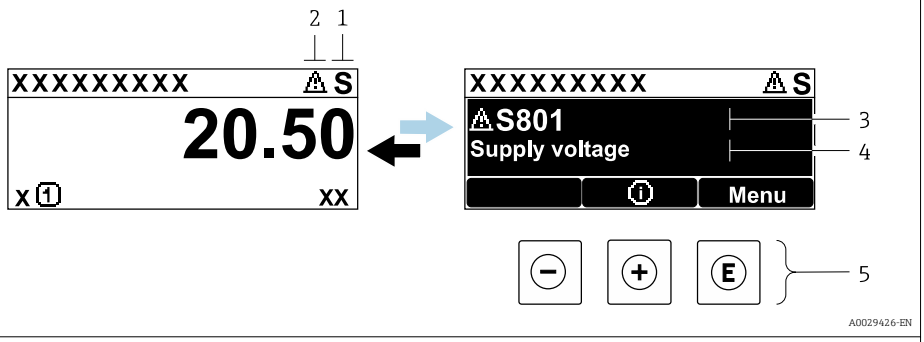

1 *Status signal*
2 *Diagnostic behavior*
3 *Diagnostic behavior with diagnostic code*
4 *Short text*
5 *Operating elements*

If two or more diagnostic events are pending simultaneously, only the message of the diagnostic event with the highest priority is shown.

Other diagnostic events that have occurred can be displayed in the **Diagnostics** menu:
- Via parameter → 164
- Via submenus → 165

Status signals

The status signals provide information on the state and reliability of the device by categorizing the cause of the diagnostic information (diagnostic event).

The status signals are categorized according to VDI/VDE 2650 and NAMUR Recommendation NE 107: F = Failure, C = Function Check, S = Out of Specification, M = Maintenance Required

Symbol	Meaning
F	**Failure** A device error has occurred. The measured value is no longer valid.
C	**Function check** The device is in service mode (e.g. during a simulation).
S	**Out of specification** The device is operated: ▪ Outside its technical specification limits (e.g. outside the process temperature range) ▪ Outside of the configuration carried out by the user (e.g. maximum flow in parameter **20 mA value**)
M	**Maintenance required** Maintenance is required. The measured value remains valid.

Diagnostic behavior

Symbol	Meaning
	**Alarm** ▪ Measurement is interrupted. ▪ Signal outputs and totalizers assume the defined alarm condition. ▪ A diagnostic message is generated.
	**Warning** Measurement is resumed. The signal outputs and totalizers are not affected. A diagnostic message is generated.

Diagnostic information

The fault can be identified using the diagnostic information. The short text helps you by providing information about the fault. In addition, the corresponding symbol for the diagnostic behavior is displayed in front of the diagnostic information on the local display.

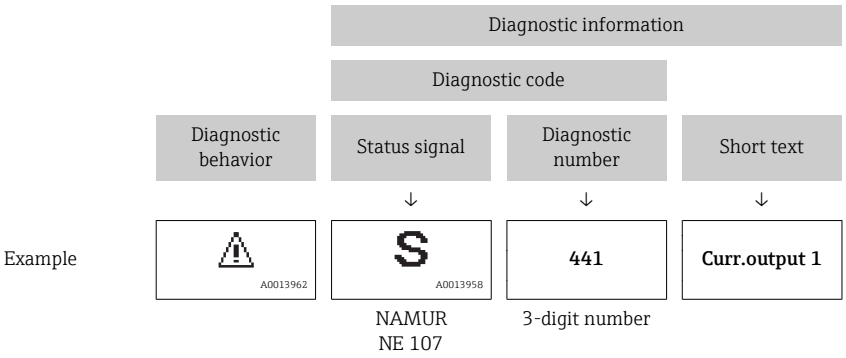

Operating elements

Key	Meaning
	**Plus key** *In a menu, submenu* Opens the message about remedy information.
	**Enter key** *In a menu, submenu* Opens the operating menu.

12.3.2 Calling up remedial measures

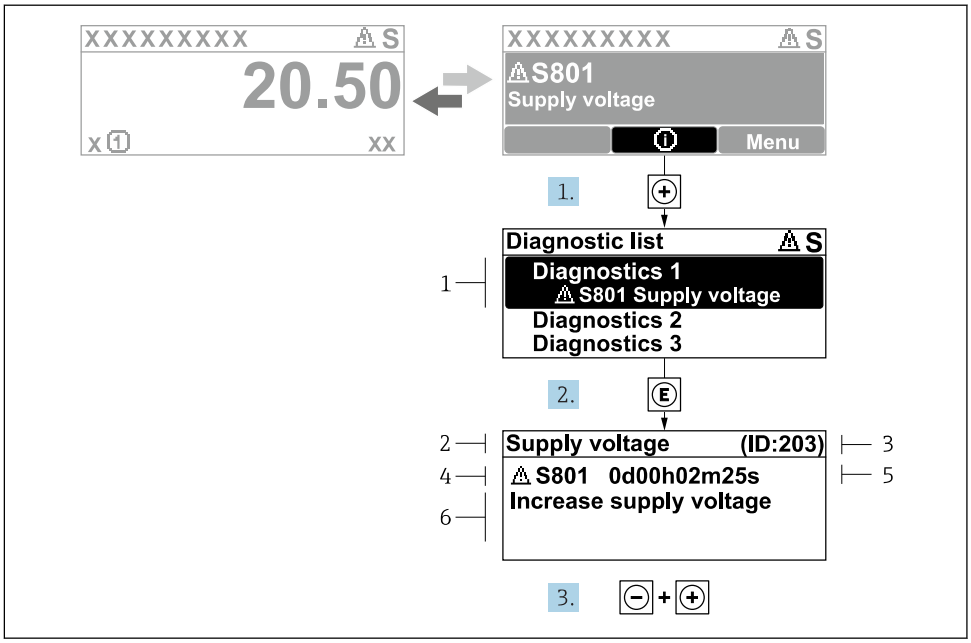

43 *Message about remedial measures*

1 *Diagnostic information*
2 *Short text*
3 *Service ID*
4 *Diagnostic behavior with diagnostic code*
5 *Operation time of occurrence*
6 *Remedial measures*

1. The user is in the diagnostic message.
   Press ⊞ (ⓘ symbol).
   ↳ The **Diagnostic list** submenu opens.
2. Select the desired diagnostic event with ⊞ or ⊟ and press Ⓔ .
   ↳ The message about the remedial measures opens.
3. Press ⊟ + ⊞ simultaneously.
   ↳ The message about the remedial measures closes.

The user is in the **Diagnostics** menu at an entry for a diagnostics event, e.g. in the **Diagnostic list** submenu or **Previous diagnostics** parameter.

1. Press Ⓔ.
   ↳ The message for the remedial measures for the selected diagnostic event opens.
2. Press ⊟ + ⊞ simultaneously.
   ↳ The message for the remedial measures closes.

12.4 Diagnostic information in the Web browser

12.4.1 Diagnostic options

Any faults detected by the measuring device are displayed in the Web browser on the home page once the user has logged on.

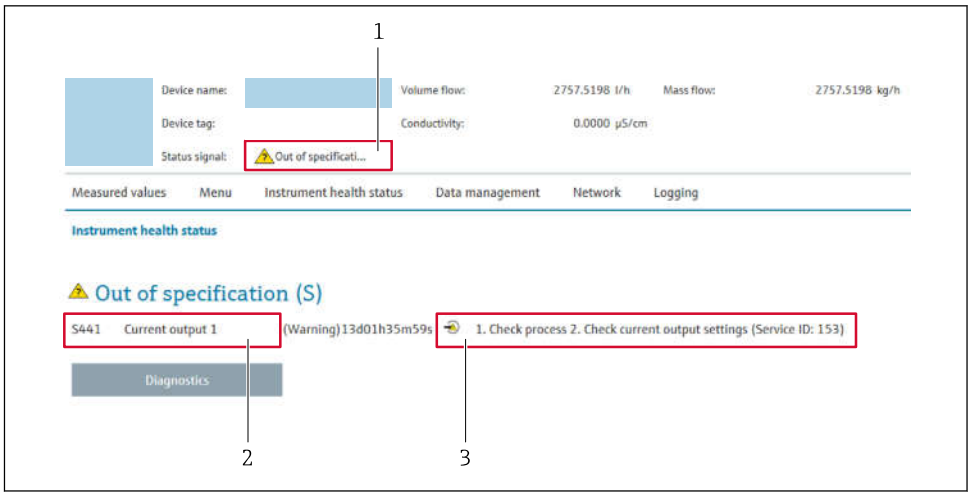

1 Status area with status signal
2 Diagnostic information
3 Remedy information with Service ID

In addition, diagnostic events which have occurred can be shown in the **Diagnostics** menu:
- Via parameter → 164
- Via submenu → 165

Status signals

The status signals provide information on the state and reliability of the device by categorizing the cause of the diagnostic information (diagnostic event).

Symbol	Meaning
	Failure A device error has occurred. The measured value is no longer valid.
	Function check The device is in service mode (e.g. during a simulation).
	Out of specification The device is operated: ▪ Outside its technical specification limits (e.g. outside the process temperature range) ▪ Outside of the configuration carried out by the user (e.g. maximum flow in parameter **20 mA value**)
	Maintenance required Maintenance is required. The measured value is still valid.

The status signals are categorized in accordance with VDI/VDE 2650 and NAMUR Recommendation NE 107.

12.4.2 Calling up remedy information

Remedy information is provided for every diagnostic event to ensure that problems can be rectified quickly. These measures are displayed in red along with the diagnostic event and the related diagnostic information.

12.5 Diagnostic information in FieldCare or DeviceCare

12.5.1 Diagnostic options

Any faults detected by the measuring device are displayed on the home page of the operating tool once the connection has been established.

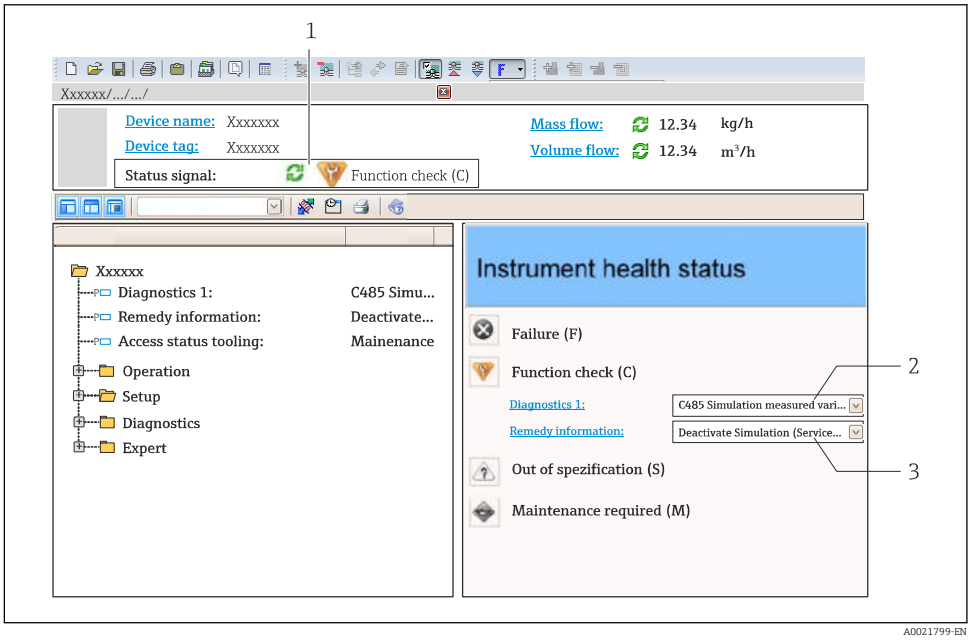

1 *Status area with status signal* → 🖹 *154*
2 *Diagnostic information* → 🖹 *155*
3 *Remedy information with Service ID*

In addition, diagnostic events which have occurred can be shown in the **Diagnostics** menu:
- Via parameter → 🖹 164
- Via submenu → 🖹 165

Diagnostic information

The fault can be identified using the diagnostic information. The short text helps you by providing information about the fault. In addition, the corresponding symbol for the diagnostic behavior is displayed in front of the diagnostic information on the local display.

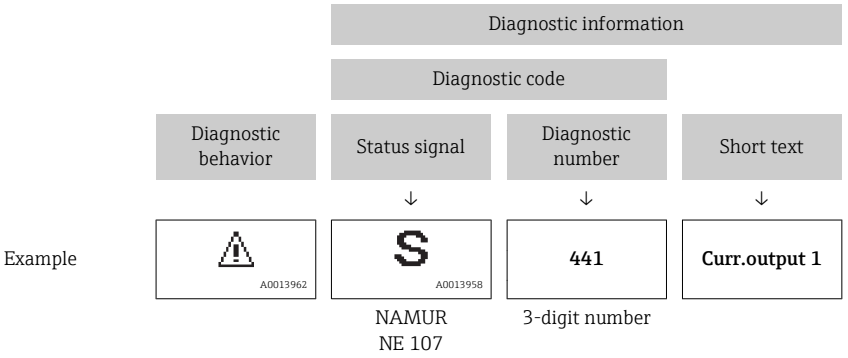

12.5.2 Calling up remedy information

Remedy information is provided for every diagnostic event to ensure that problems can be rectified quickly:
- On the home page
  Remedy information is displayed in a separate field below the diagnostics information.
- In the **Diagnostics** menu
  Remedy information can be called up in the working area of the user interface.

The user is in the **Diagnostics** menu.

1. Call up the desired parameter.
2. On the right in the working area, mouse over the parameter.
   ↳ A tool tip with remedy information for the diagnostic event appears.

12.6 Adapting the diagnostic information

12.6.1 Adapting the diagnostic behavior

Each item of diagnostic information is assigned a specific diagnostic behavior at the factory. The user can change this assignment for specific diagnostic information in the **Diagnostic behavior** submenu.

Expert → System → Diagnostic handling → Diagnostic behavior

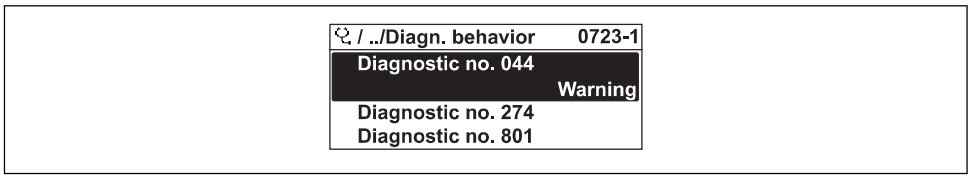

44 Taking the example of the local display

You can assign the following options to the diagnostic number as the diagnostic behavior:

Options	Description
Alarm	The device stops measurement. The signal outputs and totalizers assume the defined alarm condition. A diagnostic message is generated. The background lighting changes to red.
Warning	The device continues to measure. The signal outputs and totalizers are not affected. A diagnostic message is generated.
Logbook entry only	The device continues to measure. The diagnostic message is displayed only in the **Event logbook** submenu (**Event list** submenu) and is not displayed in alternation with the operational display.
Off	The diagnostic event is ignored, and no diagnostic message is generated or entered.

12.6.2 Adapting the status signal

Each item of diagnostic information is assigned a specific status signal at the factory. The user can change this assignment for specific diagnostic information in the **Diagnostic event category** submenu.

Expert → Communication → Diagnostic event category

Available status signals

Configuration as per HART 7 Specification (Condensed Status), in accordance with NAMUR NE107.

Symbol	Meaning
 A0013956	**Failure** A device error is present. The measured value is no longer valid.
 A0013959	**Function check** The device is in service mode (e.g. during a simulation).
 A0013958	**Out of specification** The device is being operated: ▪ Outside its technical specification limits (e.g. outside the process temperature range) ▪ Outside of the configuration carried out by the user (e.g. maximum flow in parameter **20 mA value**)
 A0013957	**Maintenance required** Maintenance is required. The measured value is still valid.
 A0023076	Has no effect on the condensed status.

12.7 Overview of diagnostic information

The amount of diagnostic information and the number of measured variables affected increase if the measuring device has one or more application packages.

In the case of some items of diagnostic information, the status signal and the diagnostic behavior can be changed. Change the diagnostic information → 159

Diagnostic number	Short text	Remedy instructions	Status signal [from the factory]	Diagnostic behavior [from the factory]
Diagnostic of sensor				
043	Sensor short circuit	1. Check sensor cable and sensor 2. Execute Heartbeat Verification 3. Replace sensor cable or sensor	S	Warning [1]
082	Data storage	1. Check module connections 2. Contact service	F	Alarm
083	Memory content	1. Restart device 2. Restore HistoROM S-DAT backup ('Device reset' parameter) 3. Replace HistoROM S-DAT	F	Alarm
168	Coating detected	Clean measuring tube	M	Warning
169	Conductivity measurement failed	1. Check grounding conditions 2. Deactivate conductivity measurement	M	Warning
170	Coil resistance	Check ambient and process temperature	F	Alarm
180	Temperature sensor defective	1. Check sensor connections 2. Replace sensor cable or sensor 3. Turn off temperature measurement	F	Warning
181	Sensor connection	1. Check sensor cable and sensor 2. Execute Heartbeat Verification 3. Replace sensor cable or sensor	F	Alarm

Diagnostic number	Short text	Remedy instructions	Status signal [from the factory]	Diagnostic behavior [from the factory]
Diagnostic of electronic				
201	Device failure	1. Restart device 2. Contact service	F	Alarm
242	Software incompatible	1. Check software 2. Flash or change main electronics module	F	Alarm
252	Modules incompatible	1. Check electronic modules 2. Check if correct modules are available (e.g. NEx, Ex) 3. Replace electronic modules	F	Alarm
252	Modules incompatible	1. Check if correct electronic modul is plugged 2. Replace electronic module	F	Alarm
262	Sensor electronic connection faulty	1. Check or replace connection cable between sensor electronic module (ISEM) and main electronics 2. Check or replace ISEM or main electronics	F	Alarm
270	Main electronic failure	Change main electronic module	F	Alarm
271	Main electronic failure	1. Restart device 2. Change main electronic module	F	Alarm
272	Main electronic failure	1. Restart device 2. Contact service	F	Alarm
273	Main electronic failure	Change electronic	F	Alarm
275	I/O module 1 to n defective	Change I/O module	F	Alarm
276	I/O module 1 to n faulty	1. Restart device 2. Change I/O module	F	Alarm
283	Memory content	1. Reset device 2. Contact service	F	Alarm
302	Device verification active	Device verification active, please wait.	C	Warning
303	I/O 1 to n configuration changed	1. Apply I/O module configuration (parameter 'Apply I/O configuration') 2. Afterwards reload device description and check wiring	M	Warning
311	Electronic failure	1. Do not reset device 2. Contact service	M	Warning
332	Writing in HistoROM backup failed	Replace user interface board Ex d/XP: replace transmitter	F	Alarm
361	I/O module 1 to n faulty	1. Restart device 2. Check electronic modules 3. Change I/O Modul or main electronics	F	Alarm
372	Sensor electronic (ISEM) faulty	1. Restart device 2. Check if failure recurs 3. Replace sensor electronic module (ISEM)	F	Alarm
373	Sensor electronic (ISEM) faulty	1. Transfer data or reset device 2. Contact service	F	Alarm

Diagnostic number	Short text	Remedy instructions	Status signal [from the factory]	Diagnostic behavior [from the factory]
375	I/O- 1 to n communication failed	1. Restart device 2. Check if failure recurs 3. Replace module rack inclusive electronic modules	F	Alarm
376	Sensor electronic (ISEM) faulty	1. Replace sensor electronic module (ISEM) 2. Turn off diagnostic message	S	Warning [1)]
377	Sensor electronic (ISEM) faulty	1. Activate empty pipe detection 2. Check partial filled pipe and installation direction 3. Check sensor cabling 4. Deactivate diagnostic 377	S	Warning [1)]
378	Supply voltage ISEM faulty	Check supply voltage to the ISEM	F	Alarm
382	Data storage	1. Insert T-DAT 2. Replace T-DAT	F	Alarm
383	Memory content	1. Restart device 2. Delete T-DAT via 'Reset device' parameter 3. Replace T-DAT	F	Alarm
387	HistoROM data faulty	Contact service organization	F	Alarm
512	Sensor electronic (ISEM) faulty	1. Check ECC recovery time 2. Turn off ECC	F	Alarm
Diagnostic of configuration				
330	Flash file invalid	1. Update firmware of device 2. Restart device	M	Warning
331	Firmware update failed	1. Update firmware of device 2. Restart device	F	Warning
410	Data transfer	1. Check connection 2. Retry data transfer	F	Alarm
412	Processing download	Download active, please wait	C	Warning
431	Trim 1 to n	Carry out trim	C	Warning
437	Configuration incompatible	1. Restart device 2. Contact service	F	Alarm
438	Dataset	1. Check data set file 2. Check device configuration 3. Up- and download new configuration	M	Warning
441	Current output 1 to n	1. Check process 2. Check current output settings	S	Warning [1)]
442	Frequency output 1 to n	1. Check process 2. Check frequency output settings	S	Warning [1)]
443	Pulse output 1 to n	1. Check process 2. Check pulse output settings	S	Warning [1)]
444	Current input 1 to n	1. Check process 2. Check current input settings	S	Warning [1)]
453	Flow override	Deactivate flow override	C	Warning
484	Failure mode simulation	Deactivate simulation	C	Alarm
485	Measured variable simulation	Deactivate simulation	C	Warning

Diagnostic number	Short text	Remedy instructions	Status signal [from the factory]	Diagnostic behavior [from the factory]
486	Current input 1 to n simulation	Deactivate simulation	C	Warning
491	Current output 1 to n simulation	Deactivate simulation	C	Warning
492	Simulation frequency output 1 to n	Deactivate simulation frequency output	C	Warning
493	Simulation pulse output 1 to n	Deactivate simulation pulse output	C	Warning
494	Switch output simulation 1 to n	Deactivate simulation switch output	C	Warning
495	Diagnostic event simulation	Deactivate simulation	C	Warning
496	Status input simulation	Deactivate simulation status input	C	Warning
502	CT activation/ deactivation failed	Follow the sequence of the custody transfer activation/deactivation: First authorized user login, then set the DIP switch on the main electonic module	C	Warning
511	ISEM settings faulty	1. Check measuring period and integration time 2. Check sensor properties	C	Alarm
520	I/O 1 to n hardware configuration invalid	1. Check I/O hardware configuration 2. Replace wrong I/O module 3. Plug the module of double pulse output on correct slot	F	Alarm
530	Electrode cleaning is running	Turn off ECC	C	Warning
531	Empty pipe adjustment faulty	Execute EPD adjustment	S	Warning [1)]
537	Configuration	1. Check IP addresses in network 2. Change IP address	F	Warning
540	Custody transfer mode failed	1. Power off device and toggle DIP switch 2. Deactivate custody transfer mode 3. Reactivate custody transfer mode 4. Check electronic components	F	Alarm
543	Double pulse output	1. Check process 2. Check pulse output settings	S	Warning [1)]
593	Double pulse output simulation	Deactivate simulation pulse output	C	Warning
594	Relay output simulation	Deactivate simulation switch output	C	Warning
599	Custody transfer logbook full	1. Deactivate custody transfer mode 2. Clear custody transfer logbook (all 30 entries) 3. Activate custody transfer mode	F	Warning
Diagnostic of process				
803	Current loop	1. Check wiring 2. Change I/O module	F	Alarm
832	Electronic temperature too high	Reduce ambient temperature	S	Warning [1)]
833	Electronic temperature too low	Increase ambient temperature	S	Warning [1)]

Diagnostic number	Short text	Remedy instructions	Status signal [from the factory]	Diagnostic behavior [from the factory]
834	Process temperature too high	Reduce process temperature	S	Warning [1]
835	Process temperature too low	Increase process temperature	S	Warning [1]
842	Process limit	Low flow cut off active! 1. Check low flow cut off configuration	S	Warning [1]
882	Input signal	1. Check input configuration 2. Check external device or process conditions	F	Alarm
937	Sensor symmetry	1. Eliminate external magnetic field near sensor 2. Turn off diagnostic message	S	Warning [1]
938	EMC interference	1. Check ambient conditions regarding EMC influence 2. Turn off diagnostic message	F	Alarm [1]
961	Electrode potential out of specification	1. Check process conditions 2. Check ambient conditions	S	Warning [1]
962	Pipe empty	1. Perform full pipe adjustment 2. Perform empty pipe adjustment 3. Turn off empty pipe detection	S	Warning [1]

1) Diagnostic behavior can be changed.

12.8 Pending diagnostic events

The **Diagnostics** menu allows the user to view the current diagnostic event and the previous diagnostic event separately.

To call up the measures to rectify a diagnostic event:
- Via local display → 156
- Via Web browser → 157
- Via "FieldCare" operating tool → 159
- Via "DeviceCare" operating tool → 159

Other pending diagnostic events can be displayed in the **Diagnostic list** submenu → 165

Navigation
"Diagnostics" menu

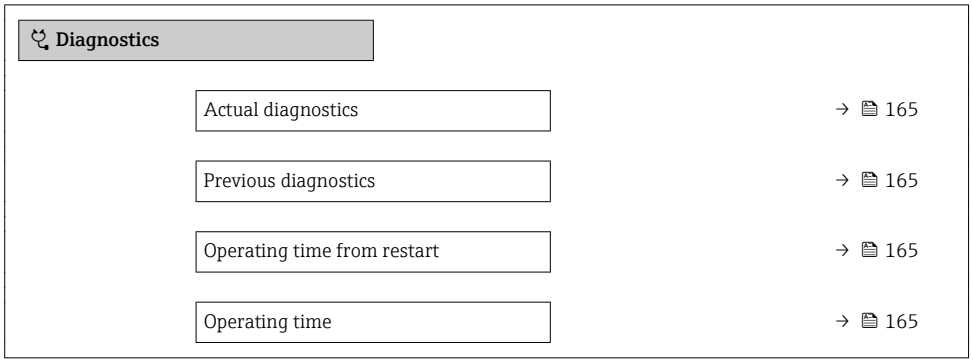

Parameter overview with brief description

Parameter	Prerequisite	Description	User interface
Actual diagnostics	A diagnostic event has occurred.	Shows the current occured diagnostic event along with its diagnostic information. If two or more messages occur simultaneously, the message with the highest priority is shown on the display.	Symbol for diagnostic behavior, diagnostic code and short message.
Previous diagnostics	Two diagnostic events have already occurred.	Shows the diagnostic event that occurred prior to the current diagnostic event along with its diagnostic information.	Symbol for diagnostic behavior, diagnostic code and short message.
Operating time from restart	–	Shows the time the device has been in operation since the last device restart.	Days (d), hours (h), minutes (m) and seconds (s)
Operating time	–	Indicates how long the device has been in operation.	Days (d), hours (h), minutes (m) and seconds (s)

12.9 Diagnostic list

Up to 5 currently pending diagnostic events can be displayed in the **Diagnostic list** submenu along with the associated diagnostic information. If more than 5 diagnostic events are pending, the events with the highest priority are shown on the display.

Navigation path
Diagnostics → Diagnostic list

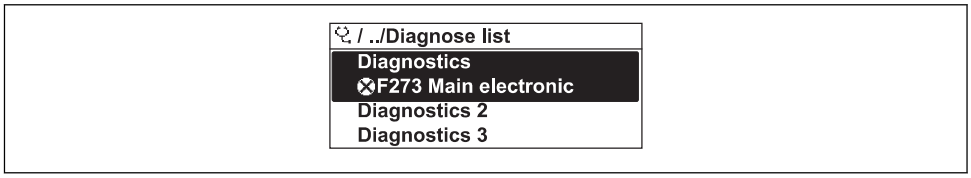

45 *Taking the example of the local display*

To call up the measures to rectify a diagnostic event:
- Via local display → 156
- Via Web browser → 157
- Via "FieldCare" operating tool → 159
- Via "DeviceCare" operating tool → 159

12.10 Event logbook

12.10.1 Reading out the event logbook

A chronological overview of the event messages that have occurred is provided in the **Events list** submenu.

Navigation path
Diagnostics menu → **Event logbook** submenu → Event list

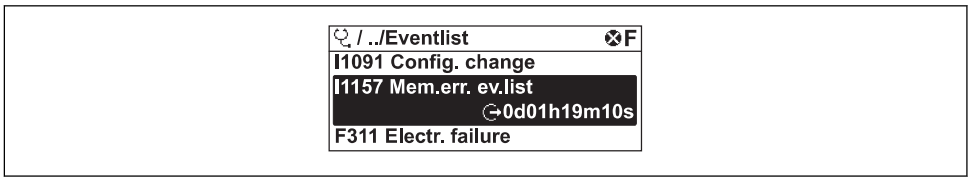

46 *Taking the example of the local display*

- A maximum of 20 event messages can be displayed in chronological order.
- If the **Extended HistoROM** application package (order option) is enabled in the device, the event list can contain up to 100 entries .

The event history includes entries for:
- Diagnostic events → 160
- Information events → 166

In addition to the operation time of its occurrence, each event is also assigned a symbol that indicates whether the event has occurred or is ended:
- Diagnostic event
  - : Occurrence of the event
  - : End of the event
- Information event
  : Occurrence of the event

To call up the measures to rectify a diagnostic event:
- Via local display → 156
- Via Web browser → 157
- Via "FieldCare" operating tool → 159
- Via "DeviceCare" operating tool → 159

For filtering the displayed event messages → 166

12.10.2 Filtering the event logbook

Using the **Filter options** parameter you can define which category of event message is displayed in the **Events list** submenu.

Navigation path
Diagnostics → Event logbook → Filter options

Filter categories
- All
- Failure (F)
- Function check (C)
- Out of specification (S)
- Maintenance required (M)
- Information (I)

12.10.3 Overview of information events

Unlike a diagnostic event, an information event is displayed in the event logbook only and not in the diagnostic list.

Info number	Info name
I1000	--------(Device ok)
I1079	Sensor changed
I1089	Power on
I1090	Configuration reset
I1091	Configuration changed

Info number	Info name
I1092	HistoROM backup deleted
I1137	Electronic changed
I1151	History reset
I1155	Reset electronic temperature
I1156	Memory error trend
I1157	Memory error event list
I1256	Display: access status changed
I1264	Safety sequence aborted
I1278	I/O module restarted
I1335	Firmware changed
I1351	Empty pipe detection adjustment failure
I1353	Empty pipe detection adjustment ok
I1361	Web server: login failed
I1397	Fieldbus: access status changed
I1398	CDI: access status changed
I1443	Coating thickness not determined
I1444	Device verification passed
I1445	Device verification failed
I1457	Measurement error verification failed
I1459	I/O module verification failed
I1461	Sensor verification failed
I1462	Sensor electronic module verific. failed
I1512	Download started
I1513	Download finished
I1514	Upload started
I1515	Upload finished
I1517	Custody transfer active
I1518	Custody transfer inactive
I1554	Safety sequence started
I1555	Safety sequence confirmed
I1556	Safety mode off
I1618	I/O module 2 replaced
I1619	I/O module 3 replaced
I1621	I/O module 4 replaced
I1622	Calibration changed
I1624	Reset all totalizers
I1625	Write protection activated
I1626	Write protection deactivated
I1627	Web server: login successful
I1628	Display: login successful
I1629	CDI: login successful
I1631	Web server access changed
I1632	Display: login failed

Info number	Info name
I1633	CDI: login failed
I1634	Reset to factory settings
I1635	Reset to delivery settings
I1639	Max. switch cycles number reached
I1643	Custody transfer logbook cleared
I1649	Hardware write protection activated
I1650	Hardware write protection deactivated
I1651	Custody transfer parameter changed
I1712	New flash file received
I1725	Sensor electronic module (ISEM) changed
I1726	Configuration backup failed

12.11 Resetting the measuring device

Using the**Device reset** parameter (→ 131) it is possible to reset the entire device configuration or some of the configuration to a defined state.

12.11.1 Function scope of the "Device reset" parameter

Options	Description
Cancel	No action is executed and the user exits the parameter.
To delivery settings	Every parameter for which a customer-specific default setting was ordered is reset to this customer-specific value. All other parameters are reset to the factory setting.
Restart device	The restart resets every parameter whose data are in the volatile memory (RAM) to the factory setting (e.g. measured value data). The device configuration remains unchanged.
Restore S-DAT backup	Restore the data that are saved on the S-DAT. The data record is restored from the electronics memory to the S-DAT. This option is displayed only in an alarm condition.

12.12 Device information

The **Device information** submenu contains all parameters that display different information for device identification.

Navigation
"Diagnostics" menu → Device information

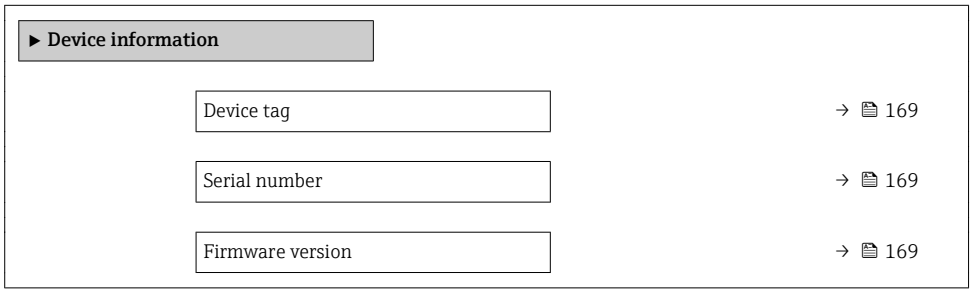

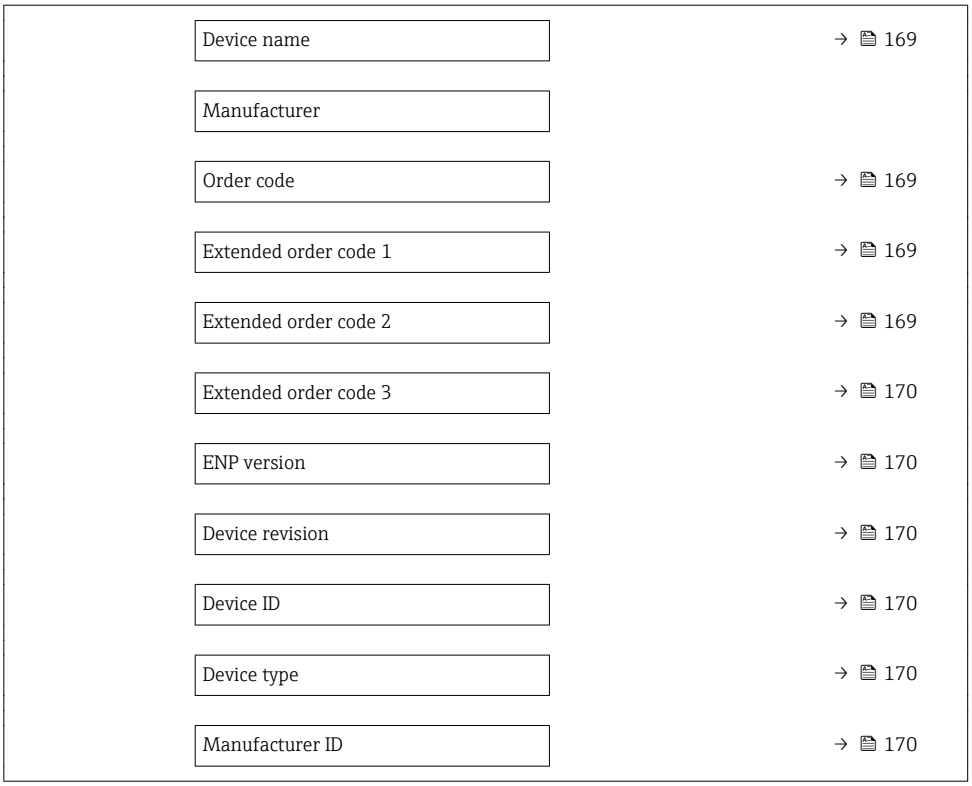

Parameter overview with brief description

Parameter	Description	User interface	Factory setting
Device tag	Shows name of measuring point.	Max. 32 characters, such as letters, numbers or special characters (e.g. @, %, /).	Promag
Serial number	Shows the serial number of the measuring device.	Max. 11-digit character string comprising letters and numbers.	–
Firmware version	Shows the device firmware version installed.	Character string in the format xx.yy.zz	–
Device name	Shows the name of the transmitter. The name can be found on the nameplate of the transmitter.	Promag 300/500	–
Order code	Shows the device order code. The order code can be found on the nameplate of the sensor and transmitter in the "Order code" field.	Character string composed of letters, numbers and certain punctuation marks (e.g. /).	–
Extended order code 1	Shows the 1st part of the extended order code. The extended order code can also be found on the nameplate of the sensor and transmitter in the "Ext. ord. cd." field.	Character string	–
Extended order code 2	Shows the 2nd part of the extended order code. The extended order code can also be found on the nameplate of the sensor and transmitter in the "Ext. ord. cd." field.	Character string	–

Parameter	Description	User interface	Factory setting
Extended order code 3	Shows the 3rd part of the extended order code. The extended order code can also be found on the nameplate of the sensor and transmitter in the "Ext. ord. cd." field.	Character string	–
ENP version	Shows the version of the electronic nameplate (ENP).	Character string	2.02.00
Device revision	Shows the device revision with which the device is registered with the HART Communication Foundation.	2-digit hexadecimal number	6
Device ID	Shows the device ID for identifying the device in a HART network.	6-digit hexadecimal number	–
Device type	Shows the device type with which the measuring device is registered with the HART Communication Foundation.	2-digit hexadecimal number	0x3A (for Promag 500)
Manufacturer ID	Shows the manufacturer ID device is registered with the HART Communication Foundation.	2-digit hexadecimal number	0x11 (for Endress+Hauser)

12.13 Firmware history

Release date	Firmware version	Order code for "Firmware version"	Firmware changes	Documentation type	Documentation
09.2019	01.05.zz	Option **64**	Various improvements	Operating Instructions	BA01399D/06/EN/02.19

10.2017	01.01.zz	Option **68**	▪ OPC-UA with Security new
			▪ Local display - enhanced performance and data entry via text editor
			▪ Optimized keypad lock for local display
			▪ Web server feature update
			  ▪ Support for trend data function
			  ▪ Heartbeat function enhanced to include detailed results (page 3/4 of the report)
			  ▪ Device configuration as PDF (parameter log, similar to FDT print)
			▪ Network capability of Ethernet (service) interface
			▪ Comprehensive Heartbeat feature update
			▪ Local display - support for WLAN infrastructure mode
			▪ Implementation of reset code
				Operating Instructions	BA01399D/06/EN/02.17

08.2016	01.00.zz	Option **76**	Original firmware	Operating Instructions	BA01399D/06/EN/01.16

It is possible to flash the firmware to the current version or the previous version using the service interface. For the compatibility of the firmware version, see the "Device history and compatibility" section → 172

For the compatibility of the firmware version with the previous version, the installed device description files and operating tools, observe the information about the device in the "Manufacturer's information" document.

The manufacturer's information is available:
- In the Download Area of the Endress+Hauser web site: www.endress.com → Downloads

- Specify the following details:
  - Product root: e.g. 5P5B
    The product root is the first part of the order code: see the nameplate on the device.
  - Text search: Manufacturer's information
  - Media type: Documentation – Technical Documentation

12.14 Device history and compatibility

The device model is documented in the order code on the nameplate of the device (e.g. 8F3BXX-XXX....XXXA1-XXXXXX).

Device model	Release	Change compared with earlier model	Compatibility with earlier model
A2	09.2019	I/O module with enhanced performance and functionality: see device firmware 01.05.zz → 🖹 171	No
A1	08.2016	–	–

13 Maintenance

13.1 Maintenance tasks

No special maintenance work is required.

13.1.1 Exterior cleaning

When cleaning the exterior of measuring devices, always use cleaning agents that do not attack the surface of the housing or the seals.

13.1.2 Interior cleaning

No interior cleaning is planned for the device.

13.1.3 Replacing seals

The sensor's seals (particularly aseptic molded seals) must be replaced periodically.

The interval between changes depends on the frequency of the cleaning cycles, the cleaning temperature and the medium temperature.

Replacement seals (accessory part) → 207

13.2 Measuring and test equipment

Endress+Hauser offers a wide variety of measuring and test equipment, such as W@M or device tests.

Your Endress+Hauser Sales Center can provide detailed information on the services.

List of some of the measuring and testing equipment: → 176

13.3 Endress+Hauser services

Endress+Hauser offers a wide variety of services for maintenance such as recalibration, maintenance service or device tests.

Your Endress+Hauser Sales Center can provide detailed information on the services.

14 Repair

14.1 General notes

14.1.1 Repair and conversion concept

The Endress+Hauser repair and conversion concept provides for the following:
- The measuring devices have a modular design.
- Spare parts are grouped into logical kits with the associated Installation Instructions.
- Repairs are carried out by Endress+Hauser Service or by appropriately trained customers.
- Certified devices can only be converted to other certified devices by Endress+Hauser Service or at the factory.

14.1.2 Notes for repair and conversion

For repair and modification of a measuring device, observe the following notes:
- ▶ Use only original Endress+Hauser spare parts.
- ▶ Carry out the repair according to the Installation Instructions.
- ▶ Observe the applicable standards, federal/national regulations, Ex documentation (XA) and certificates.
- ▶ Document every repair and each conversion and enter them into the *W@M* life cycle management database.

14.2 Spare parts

Measuring device serial number:
Can be read out via the **Serial number** parameter (→ 169) in the **Device information** submenu.

14.3 Endress+Hauser services

Endress+Hauser offers a wide range of services.

Your Endress+Hauser Sales Center can provide detailed information on the services.

14.4 Return

The requirements for safe device return can vary depending on the device type and national legislation.

1. Refer to the website for more information:
   http://www.endress.com/support/return-material
2. Return the device if repairs or a factory calibration are required, or if the wrong device was ordered or delivered.

14.5 Disposal

14.5.1 Removing the measuring device

1. Switch off the device.

⚠ WARNING

Danger to persons from process conditions.

- Beware of hazardous process conditions such as pressure in the measuring device, high temperatures or aggressive fluids.

2. Carry out the mounting and connection steps from the "Mounting the measuring device" and "Connecting the measuring device" sections in reverse order. Observe the safety instructions.

14.5.2 Disposing of the measuring device

⚠ WARNING

Danger to personnel and environment from fluids that are hazardous to health.

- Ensure that the measuring device and all cavities are free of fluid residues that are hazardous to health or the environment, e.g. substances that have permeated into crevices or diffused through plastic.

Observe the following notes during disposal:

- Observe valid federal/national regulations.
- Ensure proper separation and reuse of the device components.

15 Accessories

Various accessories, which can be ordered with the device or subsequently from Endress +Hauser, are available for the device. Detailed information on the order code in question is available from your local Endress+Hauser sales center or on the product page of the Endress+Hauser website: www.endress.com.

15.1 Device-specific accessories

15.1.1 For the transmitter

Accessories	Description
Transmitter ▪ Proline 500 – digital ▪ Proline 500	Transmitter for replacement or storage. Use the order code to define the following specifications: ▪ Approvals ▪ Output ▪ Input ▪ Display/operation ▪ Housing ▪ Software ▪ Proline 500 – digital transmitter: Order code: 5X5BXX-*********A ▪ Proline 500 transmitter: Order code: 5X5BXX-*********B Proline 500 transmitter for replacement: It is essential to specify the serial number of the current transmitter when ordering. Based on the serial number, the device-specific data (e.g., calibration factors) of the replacement device can be used for the new transmitter. ▪ Proline 500 – digital transmitter: Installation Instructions EA01151D ▪ Proline 500 transmitter: Installation Instructions EA01152D
External WLAN antenna	External WLAN antenna with 1.5 m (59.1 in) connecting cable and two angle brackets. Order code for "Accessory enclosed", option P8 "Wireless antenna wide area". ▪ The external WLAN antenna is not suitable for use in hygienic applications. ▪ Further information on the WLAN interface → 🖹 86. Order number: 71351317 Installation Instructions EA01238D
Pipe mounting set	Pipe mounting set for transmitter. Proline 500 – digital transmitter Order number: 71346427 Installation Instructions EA01195D Proline 500 transmitter Order number: 71346428
Protective cover Transmitter ▪ Proline 500 – digital ▪ Proline 500	Is used to protect the measuring device from the effects of the weather: e.g. rainwater, excess heating from direct sunlight. ▪ Proline 500 – digital transmitter Order number: 71343504 ▪ Proline 500 transmitter Order number: 71343505 Installation Instructions EA01191D

Display guard Proline 500 – digital	Is used to protect the display against impact or scoring from sand in desert areas. Order number: 71228792 Installation Instructions EA01093D
Ground cable	Set, consisting of two ground cables for potential equalization.
Connecting cable Proline 500 – digital Sensor – Transmitter	The connecting cable can be ordered directly with the measuring device (order code for "Cable, sensor connection) or as an accessory (order number DK5012). The following cable lengths are available: order code for "Cable, sensor connection" ▪ Option B: 20 m (65 ft) ▪ Option E: User configurable up to max. 50 m ▪ Option F: User configurable up to max. 165 ft Maximum possible cable length for a Proline 500 – digital connecting cable: 300 m (1000 ft)
Connecting cable Proline 500 Sensor – Transmitter	The connecting cable can be ordered directly with the measuring device (order code for "Cable, sensor connection) or as an accessory (order number DK5012). The following cable lengths are available: order code for "Cable, sensor connection" ▪ Option 1: 5 m (16 ft) ▪ Option 2: 10 m (32 ft) ▪ Option 3: 20 m (65 ft) ▪ Option 4: User configurable cable length (m) ▪ Option 5: User configurable cable length (ft) Reinforced connecting cable with an additional, reinforcing metal braid: ▪ Option 6: User configurable cable length (m) ▪ Option 7: User configurable cable length (ft) Possible cable length for a Proline 500 connecting cable: depends on the medium conductivity, max. 200 m (660 ft)

15.1.2 For the sensor

Accessories	Description
Ground disks	Are used to ground the medium in lined measuring tubes to ensure proper measurement. For details, see Installation Instructions EA00070D

15.2 Communication-specific accessories

Accessories	Description
Commubox FXA195 HART	For intrinsically safe HART communication with FieldCare via the USB interface. Technical Information TI00404F
HART Loop Converter HMX50	Is used to evaluate and convert dynamic HART process variables to analog current signals or limit values. ▪ Technical Information TI00429F ▪ Operating Instructions BA00371F
Fieldgate FXA320	Gateway for the remote monitoring of connected 4-20 mA measuring devices via a Web browser. Technical Information TI00025S Operating Instructions BA00053S
Fieldgate FXA520	Gateway for the remote diagnostics and remote configuration of connected HART measuring devices via a Web browser. Technical Information TI00025S Operating Instructions BA00051S

Field Xpert SFX350	Field Xpert SFX350 is a mobile computer for commissioning and maintenance. It enables efficient device configuration and diagnostics for HART devices and can be used in non-hazardous areas. Operating Instructions BA01202S
Field Xpert SFX370	Field Xpert SFX370 is a mobile computer for commissioning and maintenance. It enables efficient device configuration and diagnostics for HART devices and can be used in the non-hazardous area and in the hazardous area. Operating Instructions BA01202S
Field Xpert SMT70	The Field Xpert SMT70 tablet PC for device configuration enables mobile plant asset management in hazardous and non-hazardous areas. It is suitable for commissioning and maintenance staff to manage field instruments with a digital communication interface and to record progress. This tablet PC is designed as an all-in-one solution with a preinstalled driver library and is an easy-to-use, touch-sensitive tool which can be used to manage field instruments throughout their entire life cycle. ▪ Technical Information TI01342S ▪ Operating Instructions BA01709S ▪ Product page: www.endress.com/smt70

15.3 Service-specific accessories

Accessories	Description
Applicator	Software for selecting and sizing Endress+Hauser measuring devices: ▪ Choice of measuring devices for industrial requirements ▪ Calculation of all the necessary data for identifying the optimum flowmeter: e.g. nominal diameter, pressure loss, flow velocity and accuracy. ▪ Graphic illustration of the calculation results ▪ Determination of the partial order code, administration, documentation and access to all project-related data and parameters over the entire life cycle of a project. Applicator is available: ▪ Via the Internet: https://portal.endress.com/webapp/applicator ▪ As a downloadable DVD for local PC installation.
W@M	W@M Life Cycle Management Improved productivity with information at your fingertips. Data relevant to a plant and its components is generated from the first stages of planning and during the asset's complete life cycle. W@M Life Cycle Management is an open and flexible information platform with online and on-site tools. Instant access for your staff to current, in-depth data shortens your plant's engineering time, speeds up procurement processes and increases plant uptime. Combined with the right services, W@M Life Cycle Management boosts productivity in every phase. For more information, visit www.endress.com/lifecyclemanagement
FieldCare	FDT-based plant asset management tool from Endress+Hauser. It can configure all smart field units in your system and helps you manage them. By using the status information, it is also a simple but effective way of checking their status and condition. Operating Instructions BA00027S and BA00059S
DeviceCare	Tool to connect and configure Endress+Hauser field devices. Innovation brochure IN01047S

15.4 System components

Accessories	Description
Memograph M graphic data manager	The Memograph M graphic data manager provides information on all the relevant measured variables. Measured values are recorded correctly, limit values are monitored and measuring points analyzed. The data are stored in the 256 MB internal memory and also on a SD card or USB stick. ▪ Technical Information TI00133R ▪ Operating Instructions BA00247R

16 Technical data

16.1 Application

The measuring device is only suitable for flow measurement of liquids with a minimum conductivity of 5 µS/cm.

Depending on the version ordered, the measuring device can also measure potentially explosive, flammable, poisonous and oxidizing media.

To ensure that the device remains in proper operating condition for its service life, use the measuring device only for media against which the process-wetted materials are sufficiently resistant.

16.2 Function and system design

Measuring principle

Electromagnetic flow measurement on the basis of *Faraday's law of magnetic induction*.

Measuring system

The measuring system consists of a transmitter and a sensor. The transmitter and sensor are mounted in physically separate locations. They are interconnected by connecting cables.

For information on the structure of the device → 14

16.3 Input

Measured variable

Direct measured variables

- Volume flow (proportional to induced voltage)
- Electrical conductivity

Calculated measured variables

- Mass flow
- Corrected volume flow

Measuring range

Typically v = 0.01 to 10 m/s (0.03 to 33 ft/s) with the specified accuracy

Flow characteristic values in SI units: DN 15 to 125 (½ to 4")

Nominal diameter		Recommended flow	Factory settings		
		min./max. full scale value (v ~ 0.3/10 m/s)	Full scale value current output (v ~ 2.5 m/s)	Pulse value (~ 2 pulse/s)	Low flow cut off (v ~ 0.04 m/s)
[mm]	[in]	[dm³/min]	[dm³/min]	[dm³]	[dm³/min]
15	½	4 to 100	25	0.2	0.5
25	1	9 to 300	75	0.5	1
32	–	15 to 500	125	1	2
40	1 ½	25 to 700	200	1.5	3
50	2	35 to 1 100	300	2.5	5
65	–	60 to 2 000	500	5	8

Nominal diameter		Recommended flow	Factory settings		
		min./max. full scale value (v ~ 0.3/10 m/s)	Full scale value current output (v ~ 2.5 m/s)	Pulse value (~ 2 pulse/s)	Low flow cut off (v ~ 0.04 m/s)
[mm]	[in]	[dm³/min]	[dm³/min]	[dm³]	[dm³/min]
80	3	90 to 3 000	750	5	12
100	4	145 to 4 700	1200	10	20
125	–	220 to 7 500	1850	15	30

Flow characteristic values in SI units: DN 150 to 600 (6 to 24")

Nominal diameter		Recommended flow	Factory settings		
		min./max. full scale value (v ~ 0.3/10 m/s)	Full scale value current output (v ~ 2.5 m/s)	Pulse value (~ 2 pulse/s)	Low flow cut off (v ~ 0.04 m/s)
[mm]	[in]	[m³/h]	[m³/h]	[m³]	[m³/h]
150	6	20 to 600	150	0.03	2.5
200	8	35 to 1 100	300	0.05	5
250	10	55 to 1 700	500	0.05	7.5
300	12	80 to 2 400	750	0.1	10
350	14	110 to 3 300	1 000	0.1	15
400	16	140 to 4 200	1 200	0.15	20
450	18	180 to 5 400	1 500	0.25	25
500	20	220 to 6 600	2 000	0.25	30
600	24	310 to 9 600	2 500	0.3	40

Flow characteristic values in US units: ½ - 24" (DN 15 - 600)

Nominal diameter		Recommended flow	Factory settings		
		min./max. full scale value (v ~ 0.3/10 m/s)	Full scale value current output (v ~ 2.5 m/s)	Pulse value (~ 2 pulse/s)	Low flow cut off (v ~ 0.04 m/s)
[in]	[mm]	[gal/min]	[gal/min]	[gal]	[gal/min]
½	15	1.0 to 27	6	0.1	0.15
1	25	2.5 to 80	18	0.2	0.25
1 ½	40	7 to 190	50	0.5	0.75
2	50	10 to 300	75	0.5	1.25
3	80	24 to 800	200	2	2.5
4	100	40 to 1 250	300	2	4
6	150	90 to 2 650	600	5	12
8	200	155 to 4 850	1200	10	15
10	250	250 to 7 500	1500	15	30
12	300	350 to 10 600	2400	25	45
14	350	500 to 15 000	3600	30	60
16	400	600 to 19 000	4800	50	60

Nominal diameter		Recommended flow	Factory settings		
		min./max. full scale value (v ~ 0.3/10 m/s)	Full scale value current output (v ~ 2.5 m/s)	Pulse value (~ 2 pulse/s)	Low flow cut off (v ~ 0.04 m/s)
[in]	[mm]	[gal/min]	[gal/min]	[gal]	[gal/min]
18	450	800 to 24 000	6000	50	90
20	500	1 000 to 30 000	7500	75	120
24	600	1 400 to 44 000	10500	100	180

Recommended measuring range

Flow limit → 196

Operable flow range

Over 1000 : 1

Input signal

External measured values

To increase the accuracy of certain measured variables or to calculate the mass flow, the automation system can continuously write different measured values to the measuring device:
- Medium temperature to increase the accuracy of the electrical conductivity (e.g. iTEMP)
- Reference density for calculating the mass flow

Various pressure transmitters and temperature measuring devices can be ordered from Endress+Hauser: see "Accessories" section → 179

It is recommended to read in external measured values to calculate the corrected volume flow.

HART protocol

The measured values are written from the automation system to the measuring device via the HART protocol. The pressure transmitter must support the following protocol-specific functions:
- HART protocol
- Burst mode

Current input

The measured values are written from the automation system to the measuring device via the current input → 182.

Current input 0/4 to 20 mA

Current input	0/4 to 20 mA (active/passive)
Current span	▪ 4 to 20 mA (active) ▪ 0/4 to 20 mA (passive)
Resolution	1 µA
Voltage drop	Typically: 0.6 to 2 V for 3.6 to 22 mA (passive)
Maximum input voltage	≤ 30 V (passive)
Open-circuit voltage	≤ 28.8 V (active)
Possible input variables	▪ Pressure ▪ Temperature ▪ Density ▪

Status input

Maximum input values	▪ DC −3 to 30 V ▪ If status input is active (ON): R_i >3 kΩ
Response time	Configurable: 5 to 200 ms
Input signal level	▪ Low signal: DC −3 to +5 V ▪ High signal: DC 12 to 30 V
Assignable functions	▪ Off ▪ Reset the individual totalizers separately ▪ Reset all totalizers ▪ Flow override

16.4 Output

Output signal

Current output 4 to 20 mA HART

Order code	"Output; Input 1" (20): Option BA: current output 4 to 20 mA HART
Signal mode	Can be set to: ▪ Active ▪ Passive
Current range	Can be set to: ▪ 4 to 20 mA NAMUR ▪ 4 to 20 mA US ▪ 4 to 20 mA ▪ 0 to 20 mA (only with signal mode active) ▪ Fixed current value
Open-circuit voltage	DC 28.8 V (active)
Maximum input voltage	DC 30 V (passive)
Load	250 to 700 Ω
Resolution	0.38 µA
Damping	Configurable: 0 to 999 s
Assignable measured variables	▪ Volume flow ▪ Mass flow ▪ Corrected volume flow ▪ Flow velocity ▪ Conductivity ▪ Electronics temperature

Current output 4 to 20 mA HART Ex i

Order code	"Output; Input 1" (20) can be set to: ▪ Option CA: current output 4 to 20 mA HART Ex i passive ▪ Option CC: current output 4 to 20 mA HART Ex i active
Signal mode	Depending on the ordered variant.
Current range	Can be set to: ▪ 4 to 20 mA NAMUR ▪ 4 to 20 mA US ▪ 4 to 20 mA ▪ 0 to 20 mA (only with signal mode active) ▪ Fixed current value
Open-circuit voltage	DC 21.8 V (active)
Maximum input voltage	DC 30 V (passive)
Load	▪ 250 to 400 Ω (active) ▪ 250 to 700 Ω (passive)
Resolution	0.38 µA
Damping	Configurable: 0 to 999 s
Assignable measured variables	▪ Volume flow ▪ Mass flow ▪ Corrected volume flow ▪ Flow velocity ▪ Conductivity ▪ Electronics temperature

Current output 4 to 20 mA

Order code	"Output; Input 2" (21), "Output; Input 3" (022) or "Output; Input 4" (023): Option B: current output 4 to 20 mA
Signal mode	Can be set to: ▪ Active ▪ Passive
Current range	Can be set to: ▪ 4 to 20 mA NAMUR ▪ 4 to 20 mA US ▪ 4 to 20 mA ▪ 0 to 20 mA (only with signal mode active) ▪ Fixed current value
Maximum output values	22.5 mA
Open-circuit voltage	DC 28.8 V (active)
Maximum input voltage	DC 30 V (passive)
Load	0 to 700 Ω
Resolution	0.38 µA
Damping	Configurable: 0 to 999 s
Assignable measured variables	▪ Volume flow ▪ Mass flow ▪ Corrected volume flow ▪ Flow velocity ▪ Conductivity ▪ Electronics temperature

Current output 4 to 20 mA Ex i passive

Order code	"Output; Input 2" (21), "Output; Input 3" (022): Option C: current output 4 to 20 mA Ex i passive
Signal mode	Passive
Current range	Can be set to: ▪ 4 to 20 mA NAMUR ▪ 4 to 20 mA US ▪ 4 to 20 mA ▪ Fixed current value
Maximum output values	22.5 mA
Maximum input voltage	DC 30 V
Load	0 to 700 Ω
Resolution	0.38 µA
Damping	Configurable: 0 to 999 s
Assignable measured variables	▪ Volume flow ▪ Mass flow ▪ Corrected volume flow ▪ Flow velocity ▪ Conductivity ▪ Electronics temperature

Pulse/frequency/switch output

Function	Can be set to pulse, frequency or switch output
Version	Open collector Can be set to: ▪ Active ▪ Passive ▪ Passive NAMUR Ex-i, passive
Maximum input values	DC 30 V, 250 mA (passive)
Open-circuit voltage	DC 28.8 V (active)
Voltage drop	For 22.5 mA: ≤ DC 2 V
Pulse output	
Maximum input values	DC 30 V, 250 mA (passive)
Maximum output current	22.5 mA (active)
Open-circuit voltage	DC 28.8 V (active)
Pulse width	Configurable: 0.05 to 2 000 ms
Maximum pulse rate	10 000 Impulse/s
Pulse value	Adjustable
Assignable measured variables	▪ Volume flow ▪ Mass flow ▪ Corrected volume flow
Frequency output	
Maximum input values	DC 30 V, 250 mA (passive)
Maximum output current	22.5 mA (active)
Open-circuit voltage	DC 28.8 V (active)
Output frequency	Adjustable: end value frequency 2 to 10 000 Hz (f_{max} = 12 500 Hz)
Damping	Configurable: 0 to 999 s
Pulse/pause ratio	1:1
Assignable measured variables	▪ Volume flow ▪ Mass flow ▪ Corrected volume flow ▪ Flow velocity ▪ Conductivity ▪ Electronics temperature
Switch output	
Maximum input values	DC 30 V, 250 mA (passive)
Open-circuit voltage	DC 28.8 V (active)
Switching behavior	Binary, conductive or non-conductive
Switching delay	Configurable: 0 to 100 s

Number of switching cycles	Unlimited

Assignable functions	▪ Off
	▪ On
	▪ Diagnostic behavior
	▪ Limit value:
	  ▪ Off
	  ▪ Volume flow
	  ▪ Mass flow
	  ▪ Corrected volume flow
	  ▪ Flow velocity
	  ▪ Conductivity
	  ▪ Totalizer 1-3
	  ▪ Electronics temperature
	▪ Flow direction monitoring
	▪ Status
	  ▪ Empty pipe detection
	  ▪ Low flow cut off

Double pulse output

Function	Double pulse
Version	Open collector Can be set to: ▪ Active ▪ Passive ▪ Passive NAMUR
Maximum input values	DC 30 V, 250 mA (passive)
Open-circuit voltage	DC 28.8 V (active)
Voltage drop	For 22.5 mA: ≤ DC 2 V
Output frequency	Configurable: 0 to 1 000 Hz
Damping	Configurable: 0 to 999 s
Pulse/pause ratio	1:1
Assignable measured variables	▪ Volume flow ▪ Mass flow ▪ Corrected volume flow ▪ Flow velocity ▪ Conductivity ▪ Electronics temperature

Relay output

Function	Switch output
Version	Relay output, galvanically isolated
Switching behavior	Can be set to: ▪ NO (normally open), factory setting ▪ NC (normally closed)

Maximum switching capacity (passive)	▪ DC 30 V, 0.1 A ▪ AC 30 V, 0.5 A

Assignable functions	▪ Off
	▪ On
	▪ Diagnostic behavior
	▪ Limit value:
	  ▪ Off
	  ▪ Volume flow
	  ▪ Mass flow
	  ▪ Corrected volume flow
	  ▪ Flow velocity
	  ▪ Conductivity
	  ▪ Totalizer 1-3
	  ▪ Electronic temperature
	▪ Flow direction monitoring
	▪ Status
	  ▪ Empty pipe detection
	  ▪ Low flow cut off

User-configurable input/output

One specific input or output is assigned to a user-configurable input/output (configurable I/O) during device commissioning.

The following inputs and outputs are available for assignment:
- Choice of current output: 4 to 20 mA (active), 0/4 to 20 mA (passive)
- Pulse/frequency/switch output
- Choice of current input: 4 to 20 mA (active), 0/4 to 20 mA (passive)
- Status input

Signal on alarm

Depending on the interface, failure information is displayed as follows:

Current output 0/4 to 20 mA

4 to 20 mA

Failure mode	Choose from: ▪ 4 to 20 mA in accordance with NAMUR recommendation NE 43 ▪ 4 to 20 mA in accordance with US ▪ Min. value: 3.59 mA ▪ Max. value: 22.5 mA ▪ Freely definable value between: 3.59 to 22.5 mA ▪ Actual value ▪ Last valid value

0 to 20 mA

Failure mode	Choose from: ▪ Maximum alarm: 22 mA ▪ Freely definable value between: 0 to 20.5 mA

Pulse/frequency/switch output

Pulse output	
Failure mode	Choose from: ▪ Actual value ▪ No pulses
Frequency output	

Failure mode	Choose from: ▪ Actual value ▪ 0 Hz ▪ Defined value (f_{max} 2 to 12 500 Hz)
Switch output	
Failure mode	Choose from: ▪ Current status ▪ Open ▪ Closed

Relay output

Failure mode	Choose from: ▪ Current status ▪ Open ▪ Closed

Local display

Plain text display	With information on cause and remedial measures
Backlight	Red backlighting indicates a device error.

Status signal as per NAMUR recommendation NE 107

Interface/protocol

- Via digital communication:
  HART protocol
- Via service interface
  - CDI-RJ45 service interface
  - WLAN interface

Plain text display	With information on cause and remedial measures

Web browser

Plain text display	With information on cause and remedial measures

Light emitting diodes (LED)

Status information	Status indicated by various light emitting diodes The following information is displayed depending on the device version: ▪ Supply voltage active ▪ Data transmission active ▪ Device alarm/error has occurred Diagnostic information via light emitting diodes → 🖹 150

Low flow cut off	The switch points for low flow cut off are user-selectable.
Galvanic isolation	The outputs are galvanically isolated from one another and from earth (PE).

Protocol-specific data

Manufacturer ID	0x11
Device type ID	0x3C
HART protocol revision	7
Device description files (DTM, DD)	Information and files under: www.endress.com
HART load	Min. 250 Ω
System integration	Information on system integration → 🖹 91. ▪ Measured variables via HART protocol ▪ Burst Mode functionality

16.5 Power supply

Terminal assignment

→ 🖹 42

Supply voltage

Order code for "Power supply"	Terminal voltage		Frequency range
Option **D**	DC24 V	±20%	–
Option **E**	AC100 to 240 V	−15…+10%	50/60 Hz, ±4 Hz
Option **I**	DC24 V	±20%	–
	AC100 to 240 V	−15…+10%	50/60 Hz, ±4 Hz

Power consumption

Transmitter

Max. 10 W (active power)

switch-on current	Max. 36 A (<5 ms) as per NAMUR Recommendation NE 21

Current consumption

Transmitter

- Max. 400 mA (24 V)
- Max. 200 mA (110 V, 50/60 Hz; 230 V, 50/60 Hz)

Power supply failure

- Totalizers stop at the last value measured.
- Depending on the device version, the configuration is retained in the device memoryor in the pluggable data memory (HistoROM DAT).
- Error messages (incl. total operated hours) are stored.

Electrical connection

→ 🖹 51

Potential equalization

→ 🖹 56

Terminals

Spring-loaded terminals: Suitable for strands and strands with ferrules.
Conductor cross-section 0.2 to 2.5 mm² (24 to 12 AWG).

Cable entries
- Cable gland: M20 × 1.5 with cable Ø 6 to 12 mm (0.24 to 0.47 in)
- Thread for cable entry:
  - NPT ½"
  - G ½"
  - M20

Cable specification
→ 38

16.6 Performance characteristics

Reference operating conditions
- Error limits following DIN EN 29104, in future ISO 20456
- Water, typically: +15 to +45 °C (+59 to +113 °F); 0.5 to 7 bar (73 to 101 psi)
- Data as indicated in the calibration protocol
- Accuracy based on accredited calibration rigs according to ISO 17025

Maximum measured error

Error limits under reference operating conditions

o.r. = of reading

Volume flow
- ±0.5 % o.r. ± 1 mm/s (0.04 in/s)
- Optional: ±0.2 % o.r. ± 2 mm/s (0.08 in/s)

Fluctuations in the supply voltage do not have any effect within the specified range.

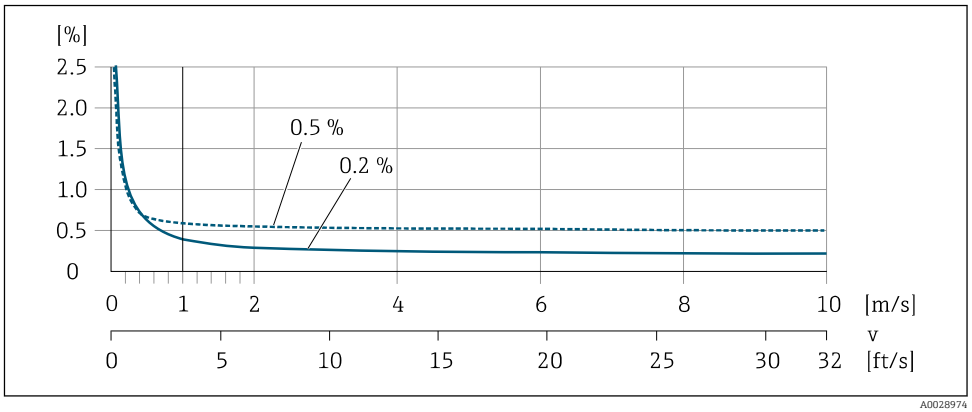

47 *Maximum measured error in % o.r.*

Electrical conductivity
Max. measured error not specified.

Accuracy of outputs

The outputs have the following base accuracy specifications.

Current output

Accuracy	±5 µA

Pulse/frequency output

o.r. = of reading

Accuracy	Max. ±50 ppm o.r. (over the entire ambient temperature range)

Repeatability

o.r. = of reading

Volume flow
Max. ±0.1 % o.r. ± 0.5 mm/s (0.02 in/s)

Electrical conductivity
Max. ±5 % o.r.

Influence of ambient temperature

Current output

Temperature coefficient	Max. 1 µA/°C

Pulse/frequency output

Temperature coefficient	No additional effect. Included in accuracy.

16.7 Installation

"Mounting requirements" → 23

16.8 Environment

Ambient temperature range

→ 25

Temperature tables

Observe the interdependencies between the permitted ambient and fluid temperatures when operating the device in hazardous areas.

For detailed information on the temperature tables, see the separate document entitled "Safety Instructions" (XA) for the device.

Storage temperature

The storage temperature corresponds to the operating temperature range of the transmitter and the sensor → 25.

- Protect the measuring device against direct sunlight during storage in order to avoid unacceptably high surface temperatures.
- Select a storage location where moisture cannot collect in the measuring device as fungus or bacteria infestation can damage the liner.
- If protection caps or protective covers are mounted these should never be removed before installing the measuring device.

Degree of protection

Transmitter
- As standard: IP66/67, type 4X enclosure
- When housing is open: IP20, type 1 enclosure
- Display module: IP20, type 1 enclosure

Sensor
As standard: IP66/67, type 4X enclosure

External WLAN antenna
IP67

Vibration- and shock-resistance

Vibration sinusoidal, in accordance with IEC 60068-2-6

Order code for "Sensor junction housing", option L "Cast, stainless" and order code for "Sensor option", option CG "Extended neck for insulation"
- 2 to 8.4 Hz, 3.5 mm peak
- 8.4 to 2 000 Hz, 1 g peak

Order code for "Sensor connection housing", option A "Alu, coated"
- 2 to 8.4 Hz, 7.5 mm peak
- 8.4 to 2 000 Hz, 2 g peak

Vibration broad-band random, according to IEC 60068-2-64

Order code for "Sensor junction housing", option L "Cast, stainless" and order code for "Sensor option", option CG "Extended neck for insulation"
- 10 to 200 Hz, 0.003 g^2/Hz
- 200 to 2 000 Hz, 0.001 g^2/Hz
- Total: 1.54 g rms

Order code for "Sensor connection housing", option A "Alu, coated"
- 10 to 200 Hz, 0.01 g^2/Hz
- 200 to 2 000 Hz, 0.003 g^2/Hz
- Total: 2.70 g rms

Shock half-sine, according to IEC 60068-2-27

- Order code for "Sensor junction housing", option L "Cast, stainless" and order code for "Sensor option", option CG "Extended neck for insulation"
  6 ms 30 g
- Order code for "Sensor connection housing", option A "Alu, coated"
  6 ms 50 g

Rough handling shocks according to IEC 60068-2-31

Mechanical load

- Protect the transmitter housing against mechanical effects, such as shock or impact.
- Never use the transmitter housing as a ladder or climbing aid.

Electromagnetic compatibility (EMC)

As per IEC/EN 61326 and NAMUR Recommendation 21 (NE 21)

Details are provided in the Declaration of Conformity.

16.9 Process

Medium temperature range

- −20 to +150 °C (−4 to +302 °F) for PFA, DN 25 to 200 (1 to 8")
- −20 to +180 °C (−4 to +356 °F) for PFA high-temperature, DN 25 to 200 (1 to 8")
- −40 to +130 °C (−40 to +266 °F) for PTFE, DN 15 to 600 (½ to 24")

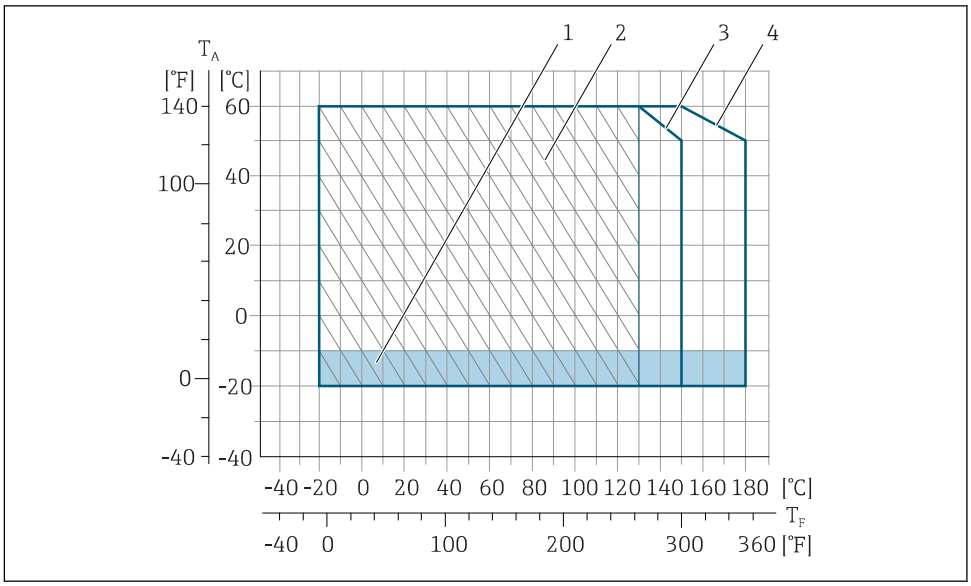

48 PFA

T_A Ambient temperature
T_F Medium temperature
1 Colored area: the ambient temperature range −10 to −20 °C (+14 to −4 °F) applies to stainless flanges only
2 Hatched area: harsh environment only for medium temperature range −20 to +130 °C (−4 to +266 °F)
3 −20 to +150 °C (−4 to +302 °F) for PFA, DN 25 to 200 (1 to 8")
4 −20 to +180 °C (−4 to +356 °F) for PFA high-temperature, DN 25 to 200 (1 to 8")

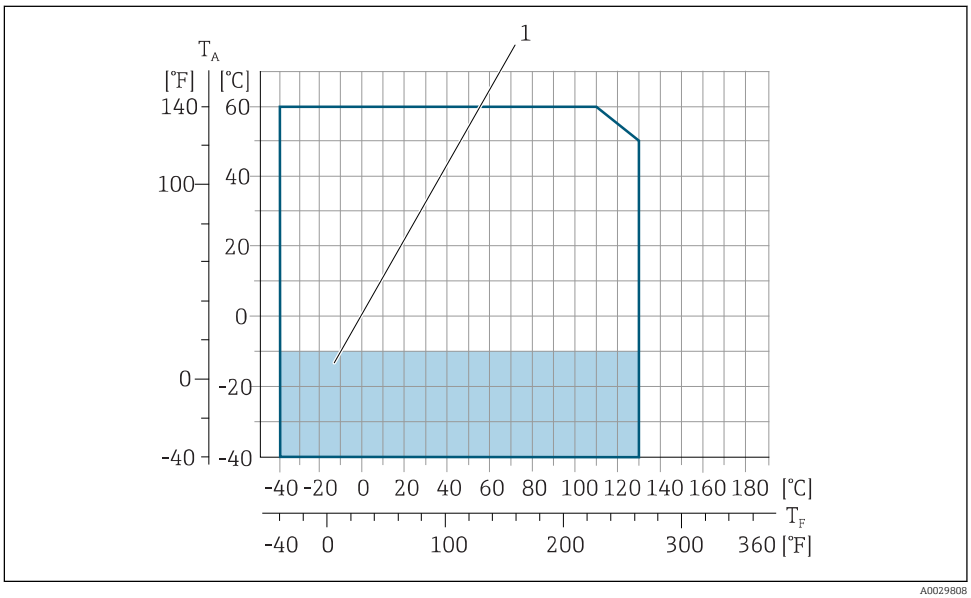

49 PTFE

T_A Ambient temperature
T_F Medium temperature
1 Colored area: the ambient temperature range of −10 to −40 °C (+14 to −40 °F) applies to stainless flanges only

Conductivity

≥ 5 µS/cm for liquids in general.

Proline 500
The necessary minimum conductivity also depends on the cable length .

Pressure-temperature ratings

An overview of the pressure-temperature ratings for the process connections is provided in the "Technical Information" document

Pressure tightness

Liner: PFA

Nominal diameter		Limit values for absolute pressure in [mbar] ([psi]) for medium temperatures:		
[mm]	[in]	+25 °C (+77 °F)	+80 °C (+176 °F)	+100 to +180 °C (+212 to +356 °F)
25	1	0 (0)	0 (0)	0 (0)
32	–	0 (0)	0 (0)	0 (0)
40	1 ½	0 (0)	0 (0)	0 (0)
50	2	0 (0)	0 (0)	0 (0)
65	–	0 (0)	0 (0)	0 (0)
80	3	0 (0)	0 (0)	0 (0)
100	4	0 (0)	0 (0)	0 (0)
125	–	0 (0)	0 (0)	0 (0)
150	6	0 (0)	0 (0)	0 (0)
200	8	0 (0)	0 (0)	0 (0)

Liner: PTFE

Nominal diameter		Limit values for absolute pressure in [mbar] ([psi]) for medium temperatures:			
[mm]	[in]	+25 °C (+77 °F)	+80 °C (+176 °F)	+100 °C (+212 °F)	+130 °C (+266 °F)
15	½	0 (0)	0 (0)	0 (0)	100 (1.45)
25	1	0 (0)	0 (0)	0 (0)	100 (1.45)
32	–	0 (0)	0 (0)	0 (0)	100 (1.45)
40	1 ½	0 (0)	0 (0)	0 (0)	100 (1.45)
50	2	0 (0)	0 (0)	0 (0)	100 (1.45)
65	–	0 (0)	–	40 (0.58)	130 (1.89)
80	3	0 (0)	–	40 (0.58)	130 (1.89)
100	4	0 (0)	–	135 (1.96)	170 (2.47)
125	–	135 (1.96)	–	240 (3.48)	385 (5.58)
150	6	135 (1.96)	–	240 (3.48)	385 (5.58)
200	8	200 (2.90)	–	290 (4.21)	410 (5.95)
250	10	330 (4.79)	–	400 (5.80)	530 (7.69)
300	12	400 (5.80)	–	500 (7.25)	630 (9.14)
350	14	470 (6.82)	–	600 (8.70)	730 (10.6)
400	16	540 (7.83)	–	670 (9.72)	800 (11.6)
450	18	No negative pressure permitted!			
500	20				
600	24				

Flow limit

The diameter of the pipe and the flow rate determine the nominal diameter of the sensor. The optimum velocity of flow is between 2 to 3 m/s (6.56 to 9.84 ft/s). Also match the velocity of flow (v) to the physical properties of the fluid:
- v < 2 m/s (6.56 ft/s): for abrasive fluids (e.g. potter's clay, lime milk, ore slurry)
- v > 2 m/s (6.56 ft/s): for fluids producing buildup (e.g. wastewater sludge)

A necessary increase in the flow velocity can be achieved by reducing the sensor nominal diameter.

For an overview of the full scale values for the measuring range, see the "Measuring range" section

Pressure loss

- No pressure loss occurs if the sensor is installed in a pipe with the same nominal diameter.
- Pressure losses for configurations incorporating adapters according to DIN EN 545 → 27

System pressure

→ 26

Vibrations

→ 26

16.10 Mechanical construction

Design, dimensions

For the dimensions and installation lengths of the device, see the "Technical Information" document, "Mechanical construction" section.

Weight

All values (weight exclusive of packaging material) refer to devices with flanges of the standard pressure rating.
The weight may be lower than indicated depending on the pressure rating and design.

Transmitter
- Proline 500 – digital polycarbonate: 1.4 kg (3.1 lbs)
- Proline 500 – digital aluminum: 2.4 kg (5.3 lbs)
- Proline 500 aluminum: 6.5 kg (14.3 lbs)
- Proline 500 cast, stainless: 15.6 kg (34.4 lbs)

Sensor
- Sensor with aluminum connection housing version: see the information in the following table
- Sensor with cast connection housing version, stainless: +3.7 kg (+8.2 lbs)

Weight in SI units

Nominal diameter		EN (DIN), AS [1]		ASME		JIS	
[mm]	[in]	Pressure rating	[kg]	Pressure rating	[kg]	Pressure rating	[kg]
15	½	PN 40	4.5	Class 150	4.5	10K	4.5
25	1	PN 40	5.3	Class 150	5.3	10K	5.3
32	–	PN 40	6	Class 150	–	10K	5.3
40	1 ½	PN 40	7.4	Class 150	7.4	10K	6.3
50	2	PN 40	8.6	Class 150	8.6	10K	7.3
65	–	PN 16	10	Class 150	–	10K	9.1
80	3	PN 16	12	Class 150	12	10K	10.5

Nominal diameter		EN (DIN), AS [1]		ASME		JIS	
[mm]	[in]	Pressure rating	[kg]	Pressure rating	[kg]	Pressure rating	[kg]
100	4	PN 16	14	Class 150	14	10K	12.7
125	–	PN 16	19.5	Class 150	–	10K	19
150	6	PN 16	23.5	Class 150	23.5	10K	22.5
200	8	PN 10	43	Class 150	43	10K	39.9
250	10	PN 10	63	Class 150	73	10K	67.4
300	12	PN 10	68	Class 150	108	10K	70.3
350	14	PN 10	103	Class 150	173	10K	79
400	16	PN 10	118	Class 150	203	10K	100
450	18	PN 10	159	Class 150	253	10K	128
500	20	PN 10	154	Class 150	283	10K	142
600	24	PN 10	206	Class 150	403	10K	188

1) For flanges to AS, only DN 25 and 50 are available.

Weight in US units

Nominal diameter		ASME	
[mm]	[in]	Pressure rating	[lbs]
15	½	Class 150	9.92
25	1	Class 150	11.7
40	1 ½	Class 150	16.3
50	2	Class 150	19.0
80	3	Class 150	26.5
100	4	Class 150	30.9
150	6	Class 150	51.8
200	8	Class 150	94.8
250	10	Class 150	161.0
300	12	Class 150	238.1
350	14	Class 150	381.5
400	16	Class 150	447.6
450	18	Class 150	557.9
500	20	Class 150	624.0
600	24	Class 150	888.6

Measuring tube specification

Nominal diameter		Pressure rating					Process connection internal diameter			
		EN (DIN)	ASME	AS 2129	AS 4087	JIS	PFA		PTFE	
[mm]	[in]	[bar]	[psi]	[bar]	[bar]	[bar]	[mm]	[in]	[mm]	[in]
15	½	PN 40	Class 150	–	–	20K	–	–	15	0.59
25	1	PN 40	Class 150	Table E	–	20K	23	0.91	26	1.02
32	–	PN 40	–	–	–	20K	32	1.26	35	1.38
40	1 ½	PN 40	Class 150	–	–	20K	36	1.42	41	1.61

Nominal diameter		Pressure rating					Process connection internal diameter			
		EN (DIN)	ASME	AS 2129	AS 4087	JIS	PFA		PTFE	
[mm]	[in]	[bar]	[psi]	[bar]	[bar]	[bar]	[mm]	[in]	[mm]	[in]
50	2	PN 40	Class 150	Table E	PN 16	10K	48	1.89	52	2.05
65	–	PN 16	–	–	–	10K	63	2.48	67	2.64
80	3	PN 16	Class 150	–	–	10K	75	2.95	80	3.15
100	4	PN 16	Class 150	–	–	10K	101	3.98	104	4.09
125	–	PN 16	–	–	–	10K	126	4.96	129	5.08
150	6	PN 16	Class 150	–	–	10K	154	6.06	156	6.14
200	8	PN 10	Class 150	–	–	10K	201	7.91	202	7.95
250	10	PN 10	Class 150	–	–	10K	–	–	256	10.1
300	12	PN 10	Class 150	–	–	10K	–	–	306	12.0
350	14	PN 10	Class 150	–	–	10K	–	–	337	13.3
400	16	PN 10	Class 150	–	–	10K	–	–	387	15.2
450	18	PN 10	Class 150	–	–	10K	–	–	432	17.0
500	20	PN 10	Class 150	–	–	10K	–	–	487	19.2
600	24	PN 10	Class 150	–	–	10K	–	–	593	23.3

Materials

Transmitter housing

Housing of Proline 500 – digital transmitter

Order code for "Transmitter housing":
- Option **A** "Aluminum coated": aluminum, AlSi10Mg, coated
- Option **D** "Polycarbonate": polycarbonate

Housing of Proline 500 transmitter

Order code for "Transmitter housing":
- Option **A** "Aluminum coated": aluminum, AlSi10Mg, coated
- Option **L** "Cast, stainless": cast, stainless steel, 1.4409 (CF3M) similar to 316L

Window material

Order code for "Transmitter housing":
- Option **A** "Aluminum, coated": glass
- Option **D** "Polycarbonate": plastic
- Option **L** "Cast, stainless": glass

Sensor connection housing

Order code for "Sensor connection housing":
- Option **A** "Aluminum coated": aluminum, AlSi10Mg, coated
- Option **L** "Cast, stainless": 1.4409 (CF3M) similar to 316L

Cable entries/cable glands

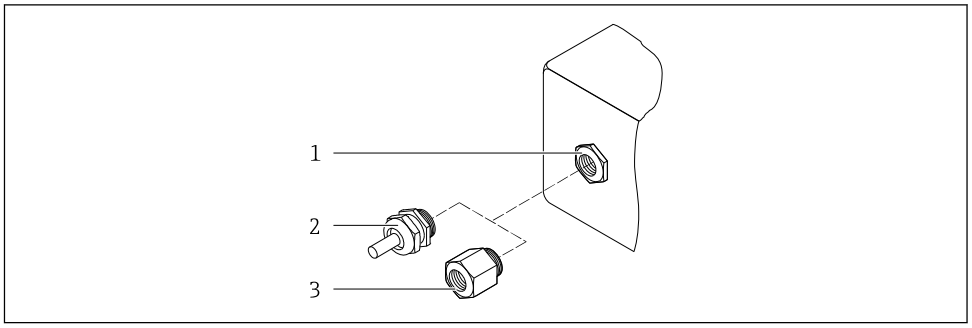

50 *Possible cable entries/cable glands*

1 Female thread M20 × 1.5
2 Cable gland M20 × 1.5
3 Adapter for cable entry with internal thread G ½" or NPT ½"

Cable entries and adapters	Material
Cable gland M20 × 1.5	Plastic
▪ Adapter for cable entry with internal thread G ½" ▪ Adapter for cable entry with internal thread NPT ½" Only available for certain device versions: ▪ Order code for "Transmitter housing": ▪ Option **A** "Aluminum, coated" ▪ Option **D** "Polycarbonate" ▪ Order code for "Sensor connection housing": ▪ Proline 500 – digital: Option **A** "Aluminum coated" Option **L** "Cast, stainless" ▪ Proline 500: Option **A** "Aluminum coated" Option **L** "Cast, stainless"	Nickel-plated brass
▪ Adapter for cable entry with internal thread G ½" ▪ Adapter for cable entry with internal thread NPT ½" Only available for certain device versions: ▪ Order code for "Transmitter housing": Option **L** "Cast, stainless" ▪ Order code for "Sensor connection housing": Option **L** "Cast, stainless"	Stainless steel, 1.4404 (316L)

Connecting cable

UV rays can impair the cable outer sheath. Protect the cable from exposure to sun as much as possible.

Connecting cable for sensor - Proline 500 – digital transmitter

PVC cable with copper shield

Connecting cable for sensor - Proline 500 transmitter

- Standard cable: PVC cable with copper shield
- Reinforced cable: PVC cable with copper shield and additional steel wire braided jacket

Sensor housing

- DN 15 to 300 (½ to 12"): coated aluminum AlSi10Mg
- DN 350 to 600 (14 to 24"): carbon steel with protective varnish

Measuring tubes

Stainless steel, 1.4301/304/1.4306/304L
For flanges made of carbon with Al/Zn protective coating (DN 15 to 300 (½ to 12")) or protective varnish (DN 350 to 600 (14 to 24"))

Liner

- PFA
- PTFE

Process connections

EN 1092-1 (DIN 2501)
Stainless steel, 1.4571; carbon steel, E250C [3]/S235JRG2/P245GH

ASME B16.5
Stainless steel, F316L; carbon steel, A105 [3]

JIS B2220
Stainless steel, F316L [3]; carbon steel, A105/A350 LF2

AS 2129 Table E
- DN 25 (1"): carbon steel, A105/S235JRG2
- DN 40 (1 ½"): carbon steel, A105/S275JR

AS 4087 PN 16
Carbon steel, A105/S275JR

Electrodes

Stainless steel, 1.4435 (F316L); Alloy C22, 2.4602 (UNS N06022); platinum; tantalum; titanium

Seals

As per DIN EN 1514-1, form IBC

Accessories

Protective cover

Stainless steel, 1.4404 (316L)

External WLAN antenna

- Antenna: ASA plastic (acrylic ester-styrene-acrylonitrile) and nickel-plated brass
- Adapter: Stainless steel and nickel-plated brass
- Cable: Polyethylene
- Plug: Nickel-plated brass
- Angle bracket: Stainless steel

Ground disks

Stainless steel, 1.4435 (F316L); Alloy C22, 2.4602 (UNS N06022); tantalum; titanium

Fitted electrodes

Measuring electrodes, reference electrodes and electrodes for empty pipe detection:
- Standard: stainless steel, 1.4435 (F316L); Alloy C22, 2.4602 (UNS N06022); tantalum, titanium
- Optional: only platinum measuring electrodes

3) DN 15 to 300 (½ to 12") with Al/Zn protective varnish; DN 350 to 600 (14 to 24") with protective varnish

Process connections

- EN 1092-1 (DIN 2501)
- ASME B16.5
- JIS B2220
- AS 2129 Table E
- AS 4087 PN 16

For information on the different materials used in the process connections → 200

Surface roughness

Stainless steel electrodes, 1.4435 (F316L); Alloy C22, 2.4602 (UNS N06022); platinum; tantalum; titanium:
≤ 0.3 to 0.5 µm (11.8 to 19.7 µin)
(All data relate to parts in contact with fluid)

Liner with PFA:
≤ 0.4 µm (15.7 µin)
(All data relate to parts in contact with fluid)

16.11 Human interface

Languages

Can be operated in the following languages:
- Via local operation
  English, German, French, Spanish, Italian, Dutch, Portuguese, Polish, Russian, Turkish, Chinese, Japanese, Korean, Bahasa (Indonesian), Vietnamese, Czech, Swedish
- Via Web browser
  English, German, French, Spanish, Italian, Dutch, Portuguese, Polish, Russian, Turkish, Chinese, Japanese, Korean, Bahasa (Indonesian), Vietnamese, Czech, Swedish
- Via "FieldCare", "DeviceCare" operating tool: English, German, French, Spanish, Italian, Chinese, Japanese

Local operation

Via display module

Equipment:
- Order code for "Display; operation", option F "4-line, illuminated, graphic display; touch control"
- Order code for "Display; operation", option G "4-line, illuminated, graphic display; touch control + WLAN"

Information about WLAN interface → 86

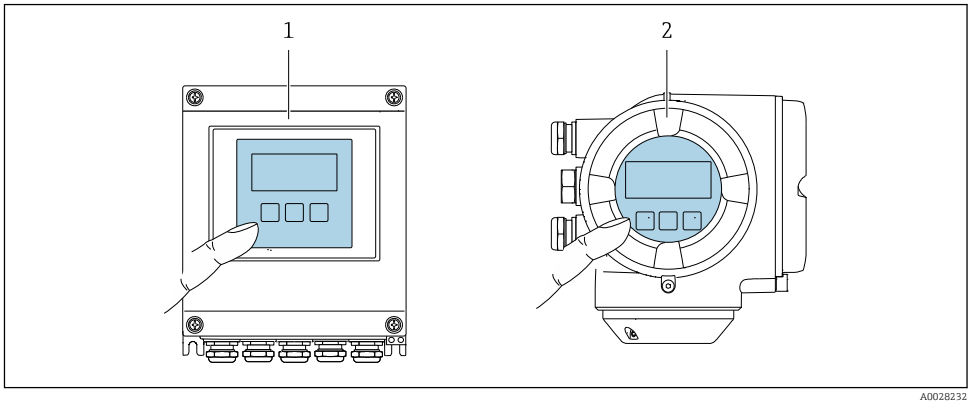

51 *Operation with touch control*

1 Proline 500 – digital
2 Proline 500

Display elements

- 4-line, illuminated, graphic display
- White background lighting; switches to red in event of device errors
- Format for displaying measured variables and status variables can be individually configured
- Permitted ambient temperature for the display: −20 to +60 °C (−4 to +140 °F)
  The readability of the display may be impaired at temperatures outside the temperature range.

Operating elements

- External operation via touch control (3 optical keys) without opening the housing: ⊞, ⊟, Ⓔ
- Operating elements also accessible in the various zones of the hazardous area

Remote operation

→ 🖹 84

Service interface

→ 🖹 85

Supported operating tools

Different operating tools can be used for local or remote access to the measuring device. Depending on the operating tool used, access is possible with different operating units and via a variety of interfaces.

Supported operating tools	Operating unit	Interface	Additional information
Web browser	Notebook, PC or tablet with Web browser	▪ CDI-RJ45 service interface ▪ WLAN interface	Special Documentation for device
DeviceCare SFE100	Notebook, PC or tablet with Microsoft Windows system	▪ CDI-RJ45 service interface ▪ WLAN interface ▪ Fieldbus protocol	→ 🖹 178
FieldCare SFE500	Notebook, PC or tablet with Microsoft Windows system	▪ CDI-RJ45 service interface ▪ WLAN interface ▪ Fieldbus protocol	→ 🖹 178
Device Xpert	Field Xpert SFX 100/350/370	HART and FOUNDATION Fieldbus fieldbus protocol	Operating Instructions BA01202S Device description files: Use update function of handheld terminal

Other operating tools based on FDT technology with a device driver such as DTM/iDTM or DD/EDD can be used for device operation. These operating tools are available from the individual manufacturers. Integration into the following operating tools, among others, is supported:

- FactoryTalk AssetCentre (FTAC) by Rockwell Automation → www.rockwellautomation.com
- Process Device Manager (PDM) by Siemens → www.siemens.com
- Asset Management Solutions (AMS) by Emerson → www.emersonprocess.com
- FieldCommunicator 375/475 by Emerson → www.emersonprocess.com
- Field Device Manager (FDM) by Honeywell → www.honeywellprocess.com
- FieldMate by Yokogawa → www.yokogawa.com
- PACTWare → www.pactware.com

The associated device description files are available at: www.endress.com → Downloads

Web server

Thanks to the integrated Web server, the device can be operated and configured via a Web browser and via a service interface (CDI-RJ45) or via a WLAN interface. The structure of the operating menu is the same as for the local display. In addition to the measured values, status information on the device is also displayed and allows the user to monitor the status of the device. Furthermore the device data can be managed and the network parameters can be configured.

A device that has a WLAN interface (can be ordered as an option) is required for the WLAN connection: order code for "Display; operation", option G "4-line, illuminated; touch control + WLAN". The device acts as an Access Point and enables communication by computer or a mobile handheld terminal.

Supported functions
Data exchange between the operating unit (such as a notebook for example) and the measuring device:
- Upload the configuration from the measuring device (XML format, configuration backup)
- Save the configuration to the measuring device (XML format, restore configuration)
- Export event list (.csv file)
- Export parameter settings (.csv file or PDF file, document the measuring point configuration)
- Export the Heartbeat verification log (PDF file, only available with the "Heartbeat Verification" application package)
- Flash firmware version for device firmware upgrade, for instance
- Download driver for system integration
- Visualize up to 1000 saved measured values (only available with the **Extended HistoROM** application package → 📄 206)

Web server special documentation → 📄 208

HistoROM data management

The measuring device features HistoROM data management. HistoROM data management comprises both the storage and import/export of key device and process data, making operation and servicing far more reliable, secure and efficient.

When the device is delivered, the factory settings of the configuration data are stored as a backup in the device memory. This memory can be overwritten with an updated data record, for example after commissioning.

Additional information on the data storage concept

There are different types of data storage units in which device data are stored and used by the device:

	Device memory	T-DAT	S-DAT
Available data	▪ Event logbook such as diagnostic events for example ▪ Parameter data record backup ▪ Device firmware package	▪ Measured value logging ("Extended HistoROM" order option) ▪ Current parameter data record (used by firmware at run time) ▪ Peakhold indicator (min/max values) ▪ Totalizer values	▪ Sensor data: nominal diameter etc. ▪ Serial number ▪ Calibration data ▪ Device configuration (e.g. SW options, fixed I/O or multi I/O)
Storage location	Fixed on the user interface board in the connection compartment	Attachable to the user interface board in the connection compartment	In the sensor plug in the transmitter neck part

Data backup

Automatic
- The most important device data (sensor and transmitter) are automatically saved in the DAT modules
- If the transmitter or measuring device is replaced: once the T-DAT containing the previous device data has been exchanged, the new measuring device is ready for operation again immediately without any errors
- If the sensor is replaced: once the sensor has been replaced, new sensor data are transferred from the S-DAT in the measuring device and the measuring device is ready for operation again immediately without any errors
- If exchanging the electronics module (e.g. I/O electronics module): Once the electronics module has been replaced, the software of the module is compared against the current device firmware. The module software is upgraded or downgraded where necessary. The electronics module is available for use immediately afterwards and no compatibility problems occur.

Manual
Additional parameter data record (complete parameter settings) in the integrated device memory HistoROM backup for:
- Data backup function
  Backup and subsequent restoration of a device configuration in the device memory HistoROM backup
- Data comparison function
  Comparison of the current device configuration with the device configuration saved in the device memory HistoROM backup

Data transfer

Manual
Transfer of a device configuration to another device using the export function of the specific operating tool, e.g. with FieldCare, DeviceCare or Web server: to duplicate the configuration or to store in an archive (e.g. for backup purposes)

Event list

Automatic
- Chronological display of up to 20 event messages in the events list
- If the **Extended HistoROM** application package (order option) is enabled: up to 100 event messages are displayed in the events list along with a time stamp, plain text description and remedial measures
- The events list can be exported and displayed via a variety of interfaces and operating tools e.g. DeviceCare, FieldCare or Web server

Data logging

Manual
If the **Extended HistoROM** application package (order option) is enabled:
- Record up to 1 000 measured values via 1 to 4 channels
- User configurable recording interval
- Record up to 250 measured values via each of the 4 memory channels
- Export the measured value log via a variety of interfaces and operating tools e.g. FieldCare, DeviceCare or web server

16.12 Certificates and approvals

Currently available certificates and approvals can be called up via the product configurator.

CE mark	The device meets the legal requirements of the applicable EU Directives. These are listed in the corresponding EU Declaration of Conformity along with the standards applied. Endress+Hauser confirms successful testing of the device by affixing to it the CE mark.
RCM-tick symbol	The measuring system meets the EMC requirements of the "Australian Communications and Media Authority (ACMA)".
Ex approval	The devices are certified for use in hazardous areas and the relevant safety instructions are provided in the separate "Safety Instructions" (XA) document. Reference is made to this document on the nameplate.
Pharmaceutical compatibility	▪ FDA ▪ USP Class VI ▪ TSE/BSE Certificate of Suitability
Functional safety	The measuring device can be used for flow monitoring systems (min., max., range) up to SIL 2 (single-channel architecture; order code for "Additional approval", option LA) and SIL 3 (multichannel architecture with homogeneous redundancy) and is independently evaluated and certified by the TÜV in accordance with IEC 61508. The following types of monitoring in safety equipment are possible: Functional Safety Manual with information on the SIL device → 208
HART certification	**HART interface** The measuring device is certified and registered by the FieldComm Group. The measuring system meets all the requirements of the following specifications: ▪ Certified according to HART 7 ▪ The device can also be operated with certified devices of other manufacturers (interoperability)
Radio approval	The measuring device has radio approval. For detailed information regarding radio approval, see Special Documentation
Pressure Equipment Directive	▪ With the identification PED/G1/x (x = category) on the sensor nameplate, Endress+Hauser confirms conformity with the "Essential Safety Requirements" specified in Appendix I of the Pressure Equipment Directive 2014/68/EU. ▪ Devices not bearing this marking (PED) are designed and manufactured according to good engineering practice. They meet the requirements of Article 4 paragraph 3 of the Pressure Equipment Directive 2014/68/EU. The range of application is indicated in tables 6 to 9 in Annex II of the Pressure Equipment Directive 2014/68/EU.
Measuring instrument approval	The measuring device is qualified to OIML R117 and has an OIML Certificate of Conformity (optional).
Additional certification	**PWIS-free** PWIS = paint-wetting impairment substances

Order code for "Service":
- Option **HC**: PWIS-free (version A)
- Option **HD**: PWIS-free (version B)
- Option **HE**: PWIS-free (version C)

For more information on PWIS-free certification, see "Test specification" document TS01028D

Other standards and guidelines

- EN 60529
  Degrees of protection provided by enclosures (IP code)
- EN 61010-1
  Safety requirements for electrical equipment for measurement, control and laboratory use - general requirements
- IEC/EN 61326
  Emission in accordance with Class A requirements. Electromagnetic compatibility (EMC requirements).
- NAMUR NE 21
  Electromagnetic compatibility (EMC) of industrial process and laboratory control equipment
- NAMUR NE 32
  Data retention in the event of a power failure in field and control instruments with microprocessors
- NAMUR NE 43
  Standardization of the signal level for the breakdown information of digital transmitters with analog output signal.
- NAMUR NE 53
  Software of field devices and signal-processing devices with digital electronics
- NAMUR NE 105
  Specifications for integrating fieldbus devices in engineering tools for field devices
- NAMUR NE 107
  Self-monitoring and diagnosis of field devices
- NAMUR NE 131
  Requirements for field devices for standard applications

16.13 Application packages

Many different application packages are available to enhance the functionality of the device. Such packages might be needed to address safety aspects or specific application requirements.

The application packages can be ordered with the device or subsequently from Endress+Hauser. Detailed information on the order code in question is available from your local Endress+Hauser sales center or on the product page of the Endress+Hauser website: www.endress.com.

Diagnostics functions

Package	Description
Extended HistoROM	Comprises extended functions concerning the event log and the activation of the measured value memory. Event log: Memory volume is extended from 20 message entries (standard version) to up to 100 entries. Data logging (line recorder): ▪ Memory capacity for up to 1000 measured values is activated. ▪ 250 measured values can be output via each of the 4 memory channels. The recording interval can be defined and configured by the user. ▪ Measured value logs can be accessed via the local display or operating tool e.g. FieldCare, DeviceCare or Web server.

Heartbeat Technology

Package	Description
Heartbeat Verification +Monitoring	**Heartbeat Verification** Meets the requirement for traceable verification to DIN ISO 9001:2008 Chapter 7.6 a) "Control of monitoring and measuring equipment". ▪ Functional testing in the installed state without interrupting the process. ▪ Traceable verification results on request, including a report. ▪ Simple testing process via local operation or other operating interfaces. ▪ Clear measuring point assessment (pass/fail) with high test coverage within the framework of manufacturer specifications. ▪ Extension of calibration intervals according to operator's risk assessment. **Heartbeat Monitoring** Continuously supplies data, which are characteristic of the measuring principle, to an external condition monitoring system for the purpose of preventive maintenance or process analysis. These data enable the operator to: ▪ Draw conclusions - using these data and other information - about the impact process influences (such as corrosion, abrasion, buildup etc.) have on the measuring performance over time. ▪ Schedule servicing in time. ▪ Monitor the process or product quality, e.g. gas pockets.

Cleaning

Package	Description
Electrode cleaning circuit (ECC)	The electrode cleaning circuit (ECC) function has been developed to have a solution for applications where magnetite (Fe_3O_4) deposits frequently occur (e.g. hot water). Since magnetite is highly conductive this build up leads to measuring errors and ultimately to the loss of signal. The application package is designed to AVOID build up of highly conductive matter and thin layers (typical of magnetite).

OPC-UA server

Package	Description
OPC-UA-Server	The application package provides the user with an integrated OPC-UA server for comprehensive instrument services for IoT and SCADA applications. Special Documentation for the "OPC-UA-Server" application package → 208.

16.14 Accessories

Overview of accessories available for order → 176

16.15 Supplementary documentation

For an overview of the scope of the associated Technical Documentation, refer to the following:
- *W@M Device Viewer* (www.endress.com/deviceviewer): Enter the serial number from nameplate
- *Endress+Hauser Operations App*: Enter the serial number from the nameplate or scan the 2D matrix code (QR code) on the nameplate

Standard documentation **Brief Operating Instructions**

Brief Operating Instructions for the sensor

Measuring device	Documentation code
Proline Promag P	KA01290D

Brief Operating Instructions for transmitter

Measuring device	Documentation code
Proline 500 – digital	KA01313D
Proline 500	KA01312D

Technical Information

Measuring device	Documentation code
Promag P 500	TI01226D

Description of device parameters

Measuring device	Documentation code
Promag 500	GP01054D

Device-dependent additional documentation

Safety instructions

Safety instructions for electrical equipment for hazardous areas.

Contents	Documentation code
ATEX/IECEx Ex i	XA01522D
ATEX/IECEx Ex ec	XA01523D
cCSAus IS	XA01524D
cCSAus Ex e ia/Ex d ia	XA01525D
cCSAus Ex nA	XA01526D
INMETRO Ex i	XA01527D
INMETRO Ex ec	XA01528D
NEPSI Ex i	XA01529D
NEPSI Ex nA	XA01530D
EAC Ex i	XA01658D
EAC Ex nA	XA01659D
JPN	XA01776D

Special Documentation

Contents	Documentation code
Information on the Pressure Equipment Directive	SD01614D
Functional Safety Manual	SD01741D
Radio approvals for WLAN interface for A309/A310 display module	SD01793D
OPC-UA Server	SD02044D

Contents	Documentation code
Heartbeat Technology	SD01641D
Web server	SD01658D

Installation Instructions

Content	Comment
Installation instructions for spare part sets and accessories	▪ Access the overview of all the available spare part sets via *W@M Device Viewer* → 174 ▪ Accessories available for order with Installation Instructions → 176

Index

A
About this document 6
Access authorization to parameters
  Read access 76
  Write access 76
Access code 76
  Incorrect input 76
Adapters 27
Adapting the diagnostic behavior 159
Adapting the status signal 159
Additional certification 205
Ambient temperature
  Influence 192
Ambient temperature range 25
AMS Device Manager 89
  Function 89
Application 180
Applicator 180
Approvals 204

B
Burst mode 93

C
Cable entries
  Technical data 191
Cable entry
  Degree of protection 62
CE mark 10, 205
Certificates 204
cGMP 205
Checklist
  Post-connection check 63
  Post-installation check 37
Cleaning
  Exterior cleaning 173
  Interior cleaning 173
Commissioning 95
  Advanced settings 120
  Configuring the measuring device 95
Communication-specific data 91
Compatibility 172
Conductivity 194
Connecting cable 38
Connecting the connecting cable
  Proline 500 – digital transmitter 48
  Proline 500 terminal assignment 51
  Proline 500 transmitter 53
  Sensor connection housing, Proline 500 51
  Sensor connection housing, Proline 500 - digital . . 46
  Terminal assignment of Proline 500 - digital 46
Connecting the measuring device
  Proline 500 51
  Proline 500 – digital 46
Connecting the signal cable/supply voltage cable
  Proline 500 – digital transmitter 49
  Proline 500 transmitter 54
Connection
  see Electrical connection
Connection examples, potential equalization 56
Connection preparations 43
Connection tools 38
Context menu
  Calling up 72
  Closing 72
  Explanation 72
Current consumption 190

D
Declaration of Conformity 10
Define access code 134, 135
Degree of protection 62, 192
Designated use 9
Device components 14
Device description files 91
Device documentation
  Supplementary documentation 8
Device history 172
Device locking, status 138
Device name
  Sensor 19
  Transmitter 17
Device repair 174
Device revision 91
Device type ID 91
DeviceCare 89
  Device description file 91
Diagnostic behavior
  Explanation 155
  Symbols 155
Diagnostic information
  Design, description 155, 158
  DeviceCare 158
  FieldCare 158
  Light emitting diodes 150
  Local display 154
  Overview 160
  Remedial measures 160
  Web browser 156
Diagnostic list 165
Diagnostic message 154
Diagnostics
  Symbols 154
DIP switch
  see Write protection switch
Direct access 74
Direct access code 69
Disabling write protection 134
Display
  see Onsite display
Display area
  For operational display 67

In the navigation view 69
Display values
For locking status 138
Disposal 174
Document
Function 6
Symbols 6
Document function 6
Down pipe 23

E
ECC 126
Editing view 70
Input screen 71
Using operating elements 71
Electrical connection
Commubox FXA195 (USB) 84
Computer with Web browser (e.g. Internet Explorer) 84
Degree of protection 62
Field Communicator 475 84
Field Xpert SFX350/SFX370 84
Field Xpert SMT70 84
Measuring device 38
Operating tool (e.g. FieldCare, AMS Device Manager, SIMATIC PDM) 84
Operating tools
Via HART protocol 84
Via service interface (CDI-RJ45) 85
Via WLAN interface 86
VIATOR Bluetooth modem 84
Web server 85
WLAN interface 86
Electromagnetic compatibility 193
Electronics module 14
Enabling write protection 134
Enabling/disabling the keypad lock 77
Endress+Hauser services
Maintenance 173
Repair 174
Environment
Ambient temperature range 25
Mechanical load 193
Storage temperature 192
Vibration- and shock-resistance 193
Error messages
see Diagnostic messages
Event list 165
Event logbook 165
Ex approval 205
Extended order code
Sensor 19
Transmitter 17
Exterior cleaning 173

F
FDA 205
Field Communicator
Function 90
Field Communicator 475 90
Field of application
Residual risks 10
Field Xpert
Function 88
Field Xpert SFX350 88
FieldCare 88
Device description file 91
Establishing a connection 88
Function 88
User interface 89
Filtering the event logbook 166
Firmware
Release date 91
Version 91
Firmware history 171
Fitted electrodes 200
Flow direction 24
Flow limit 196
Function check 95
Function range
Field Xpert 88
Function scope
AMS Device Manager 89
Field Communicator 90
Field Communicator 475 90
SIMATIC PDM 90
Functional safety (SIL) 205
Functions
see Parameter

G
Galvanic isolation 189

H
Hardware write protection 135
HART certification 205
HART input
Settings 114
HART protocol
Device variables 91
Measured values 91
Heavy sensors 24
Help text
Calling up 75
Closing 75
Explanation 75
HistoROM 128

I
Identifying the measuring device 16
Incoming acceptance 16
Influence
Ambient temperature 192
Inlet runs 25
Input 180
Inspection
Installation 37
Received goods 16

Inspection check
Connection 63
Installation 23
Installation conditions
Adapters 27
Down pipe 23
Heavy sensors 24
Inlet and outlet runs 25
Installation dimensions 25
Mounting location 23
Orientation 24
Partially filled pipe 23
System pressure 26
Thermal insulation 26
Vibrations 26
Installation dimensions 25
Interior cleaning 173

L

Languages, operation options 201
Line recorder 144
Local display 201
Navigation view 68
see Diagnostic message
see In alarm condition
see Operational display
Low flow cut off 189

M

Main electronics module 14
Maintenance tasks 173
Replacing seals 173
Managing the device configuration 128
Manufacturer ID 91
Manufacturing date 17, 19
Materials 198
Maximum measured error 191
Measured values
Calculated 180
Measured 180
see Process variables
Measuring and test equipment 173
Measuring device
Configuration 95
Conversion 174
Disposal 175
Integrating via communication protocol 91
Mounting the sensor 29
Mounting the ground cable/ground disks 29
Mounting the seals 29
Screw tightening torques 30
Screw tightening torques, maximum 30
Screw tightening torques, nominal 33
Preparing for electrical connection 43
Preparing for mounting 29
Removing 174
Repairs 174
Structure 14
Switch-on 95
Measuring instrument approval 205
Measuring principle 180
Measuring range 180
Measuring system 180
Measuring tube specification 197
Mechanical load 193
Medium temperature range 193
Menu
Diagnostics 164
Setup 97
Menus
For measuring device configuration 95
For specific settings 120
Mounting dimensions
see Installation dimensions
Mounting location 23
Mounting preparations 29
Mounting tools 28

N

Nameplate
Sensor 19
Transmitter 17
Navigation path (navigation view) 68
Navigation view
In the submenu 68
In the wizard 68
Numeric editor 70

O

Onsite display
Numeric editor 70
Text editor 70
Operable flow range 182
Operating elements 72, 155
Operating keys
see Operating elements
Operating menu
Menus, submenus 65
Structure 65
Submenus and user roles 66
Operating philosophy 66
Operation 138
Operation options 64
Operational display 67
Operational safety 10
Order code 17, 19
Orientation (vertical, horizontal) 24
Outlet runs 25
Output 184
Output signal 184

P

Packaging disposal 22
Parameter
Changing 75
Entering values or text 75
Parameter settings
Administration (Submenu) 131

Advanced setup (Submenu) 121
Burst configuration 1 to n (Submenu) 93
Configuration (Submenu) 115
Configuration backup (Submenu) 128
Current input 101
Current input (Wizard) 101
Current input 1 to n (Submenu) 140
Current output 102
Current output (Wizard) 102
Data logging (Submenu) 144
Define access code (Wizard) 130
Device information (Submenu) 168
Diagnostics (Menu) 164
Display (Submenu) 123
Display (Wizard) 111
Double pulse output 118
Double pulse output (Submenu) 118, 143
Electrode cleaning circuit (Submenu) 126
Empty pipe detection (Wizard) 114
I/O configuration 99
I/O configuration (Submenu) 99
Input (Submenu) 116
Low flow cut off (Wizard) 113
Process variables (Submenu) 138
Pulse/frequency/switch output 105
Pulse/frequency/switch output (Wizard) 105, 106, 109
Pulse/frequency/switch output 1 to n (Submenu) 142
Relay output 116
Relay output 1 to n (Submenu) 142
Relay output 1 to n (Wizard) 116
Reset access code (Submenu) 130
Sensor adjustment (Submenu) 121
Setup (Menu) 97
Simulation (Submenu) 131
Status input 100
Status input (Submenu) 100
Status input 1 to n (Submenu) 140
System units (Submenu) 97
Totalizer (Submenu) 139
Totalizer 1 to n (Submenu) 121
Totalizer handling (Submenu) 143
Value current output 1 to n (Submenu) 141
Web server (Submenu) 83
WLAN settings (Wizard) 127
Partially filled pipe 23
Performance characteristics 191
Pharmaceutical compatibility 205
Post-connection check (checklist) 63
Post-installation check 95
Post-installation check (checklist) 37
Potential equalization 56
Power consumption 190
Power supply failure 190
Pressure Equipment Directive 205
Pressure loss 196
Pressure tightness 195
Pressure-temperature ratings 195
Process conditions
Conductivity 194
Flow limit 196
Medium temperature 193
Pressure loss 196
Pressure tightness 195
Process connections 201
Product safety 10
Proline 500 – digital transmitter
Connecting the signal cable/supply voltage cable . . 49
Proline 500 connecting cable terminal assignment
Sensor connection housing 51
Proline 500 transmitter
Connecting the signal cable/supply voltage cable . . 54
Protecting parameter settings 134

R

Radio approval 205
RCM-tick symbol 205
Read access 76
Reading measured values 138
Recalibration 173
Reference operating conditions 191
Registered trademarks 8
Remedial measures
Calling up 156
Closing 156
Remote operation 202
Repair 174
Repair of a device 174
Repairs
Notes 174
Repeatability 192
Replacement
Device components 174
Replacing seals 173
Requirements for personnel 9
Return 174

S

Safety 9
Screw tightening torques 30
Maximum 30
Nominal 33
Sensor
Mounting 29
Serial number 17, 19
Setting the operating language 95
Settings
Adapting the measuring device to the process conditions 143
Administration 130
Advanced display configurations 123
Current input 101
Current output 102
Device reset 168
Double pulse output 118
Electrode cleaning circuit (ECC) 126
Empty pipe detection (EPD) 114

HART input 114
I/O configuration 99
Local display 111
Low flow cut off 113
Managing the device configuration 128
Operating language 95
Pulse output 105
Pulse/frequency/switch output 105, 106
Relay output 116
Resetting the totalizer 143
Sensor adjustment 121
Simulation 131
Status input 100
Switch output 109
System units 97
Tag name 97
Totalizer 121
Totalizer reset 143
WLAN 127
Showing data logging 144
Signal on alarm 188
SIL (functional safety) 205
SIMATIC PDM 90
Function 90
Software release 91
Spare part 174
Spare parts 174
Special connection instructions 58
Standards and guidelines 206
Status area
For operational display 67
In the navigation view 69
Status signals 154, 157
Storage concept 203
Storage conditions 21
Storage temperature 21
Storage temperature range 192
Structure
Measuring device 14
Operating menu 65
Submenu
Administration 130, 131
Advanced setup 120, 121
Burst configuration 1 to n 93
Configuration 115
Configuration backup 128
Current input 1 to n 140
Data logging 144
Device information 168
Display 123
Double pulse output 118, 143
Electrode cleaning circuit 126
Event list 165
HART input 114
I/O configuration 99
Input 116
Input values 140
Output values 141
Overview 66
Process variables 138
Pulse/frequency/switch output 1 to n 142
Relay output 1 to n 142
Reset access code 130
Sensor adjustment 121
Simulation 131
Status input 100
Status input 1 to n 140
System units 97
Totalizer 139
Totalizer 1 to n 121
Totalizer handling 143
Value current output 1 to n 141
Web server 83
Supplementary documentation 207
Supply voltage 190
Surface roughness 201
Switch output 187
Symbols
Controlling data entries 71
For communication 67
For diagnostic behavior 67
For locking 67
For measured variable 67
For measurement channel number 67
For menus 69
For parameters 69
For status signal 67
For submenu 69
For wizard 69
In the status area of the local display 67
Input screen 71
Operating elements 71
System design
Measuring system 180
see Measuring device design
System integration 91
System pressure 26

T

Technical data, overview 180
Temperature range
Ambient temperature range for display 201
Storage temperature 21
Terminal assignment 42
Terminal assignment of connecting cable for Proline 500- digital
Sensor connection housing 46
Terminals 190
Text editor 70
Thermal insulation 26
Tool tip
see Help text
Tools
Electrical connection 38
For mounting 28
Transport 21
Totalizer
Configuration 121

Transmitter
Turning the display module 37
Turning the housing 36
Transporting the measuring device 21
Troubleshooting
General 148
TSE/BSE Certificate of Suitability 205
Turning the display module 37
Turning the electronics housing
see Turning the transmitter housing
Turning the transmitter housing 36

U

Use of the measuring device
Borderline cases 9
Incorrect use 9
see Designated use
User interface
Current diagnostic event 164
Previous diagnostic event 164
User roles 66
USP Class VI 205

V

Version data for the device 91
Vibration- and shock-resistance 193
Vibrations 26

W

W@M 173, 174
W@M Device Viewer 16, 174
Weight
Transport (notes) 21
Wizard
Current input 101
Current output 102
Define access code 130
Display 111
Empty pipe detection 114
Low flow cut off 113
Pulse/frequency/switch output 105, 106, 109
Relay output 1 to n 116
WLAN settings 127
WLAN settings 127
Workplace safety 10
Write access 76
Write protection
Via access code 134
Via write protection switch 135
Write protection switch 135

www.addresses.endress.com

Endress+Hauser

People for Process Automation

Section 3.6.7

Sludge Blower

SCL R20 / R30 / R40
MD SERIES

SN 2464-7 1/2

STANDARD FEATURES
- Low weight cast aluminum construction.
- Quiet operation with integral inlet and outlet muffling.
- Recognized TEFC - cURus motor.
- High efficiency / low noise impeller design.
- No lubrication / maintenance required.
- Allowed ambient: +5 °F to +104 °F.
- Mountable in any plane.

OPTIONS
- Remote drive models (belt or coupling).
- Special voltages.
- Surface treatment or plating.
- Gas tight sealing.
- Special designs available.

ACCESSORIES
- Inlet and/or inline filters.
- Additional inlet/outlet silencers.
- Relief valves.
- Flow converting devices.
- Optionals connectors

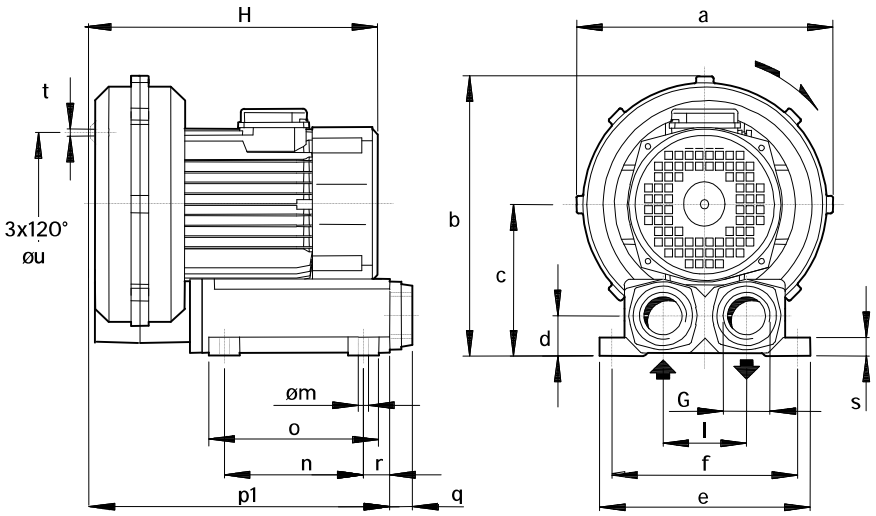

Dimensions in inches.
Dimension for reference only.

Model	a	b	c	d	e	f	G	l	m	n	o	p1	q	r	s	t	u
R20-MD	11.14	12.17	6.57	1.85	9.25	8.27	1" ¼ NPT	3.54	0.39	5.91	7.87	13.58	0.71	1.77	0.87	M6	5.91
R30-MD	12.56	13.62	7.36	1.85	9.25	8.27	1" ¼ NPT	3.54	0.39	5.91	7.87	13.94	0.71	1.77	0.87	M6	7.09
R40-MD	13.78	14.65	7.76	1.85	9.25	8.27	1" ¼ NPT	3.54	0.39	5.91	7.87	14.33	0.71	1.77	0.87	M8	8.86

Model	Maximum flow Scfm		Installed power Hp		Maximum differential pressure Δp (In WG)		Noise level Lp dB (A) (1)		Overall dimensions H	Weight
	60 Hz 3500 rpm	50 Hz 2900 rpm	60 Hz 3500 rpm	50 Hz 2900 rpm	60 Hz 3500 rpm	50 Hz 2900 rpm	60 Hz 3500 rpm	50 Hz 2900 rpm	Inches	Lbs
R20-MD	41	35	1 ½	1 ½	161	161	68.5	66.5	13.39	48.5
R30-MD	65	54	2	2	140	170	72.2	69.2	15.58	57.3
			3	-	191	-	72.8	69.7	15.55	66.1
R40-MD	78	69	3	3	141	170	72.8	70.8	16.22	77.2
			4	4	201	201	73.3	71.3	17.09	88.2

(1) Noise measured at 1 m distance with inlet and outlet ports piped, in accordance to ISO 3744.

- For proper use, the blower should be equipped with inlet filter and relief valve; other accessories available on request.
- Ambient temperaturefrom +5° to +104°F.
- Specifications subject to change without notice.

SCL R20 / R30 / R40 MD SERIES

SN 2464-7 2/2

CAPACITY

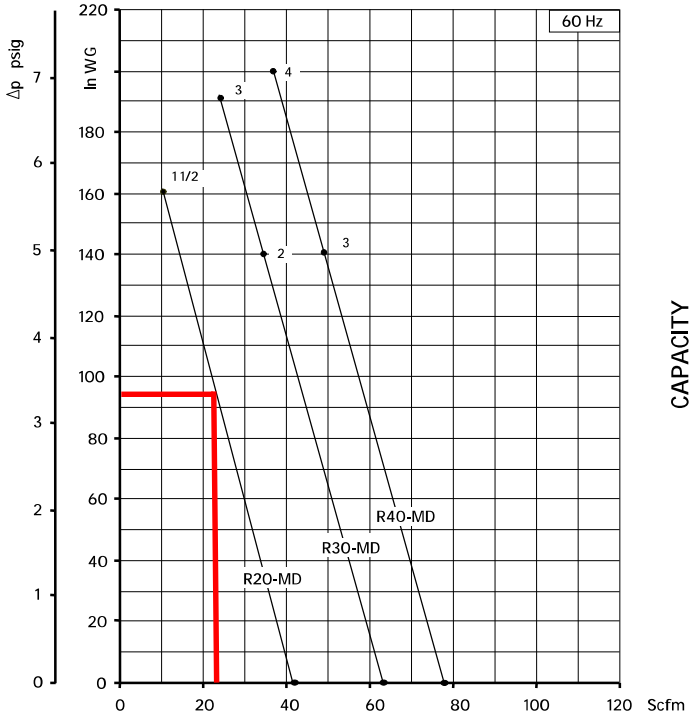

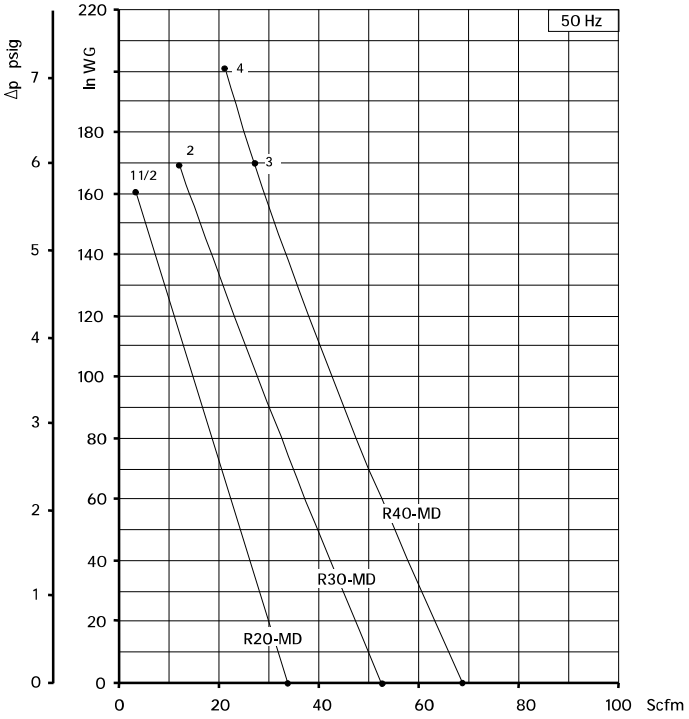

ABSORBED POWER

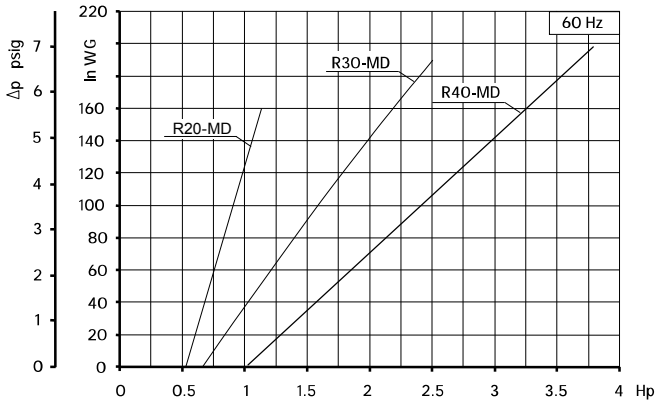

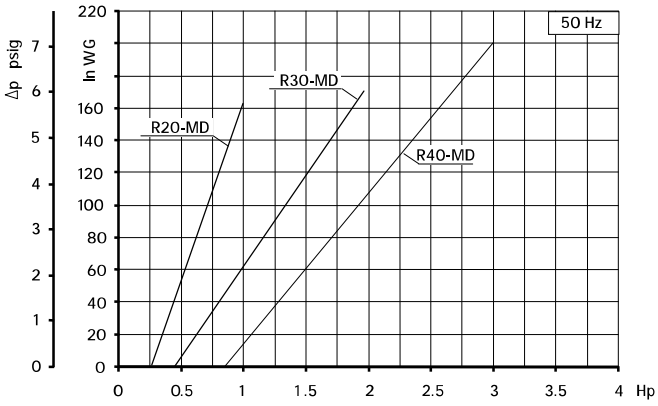

TEMPERATURE INCREASE

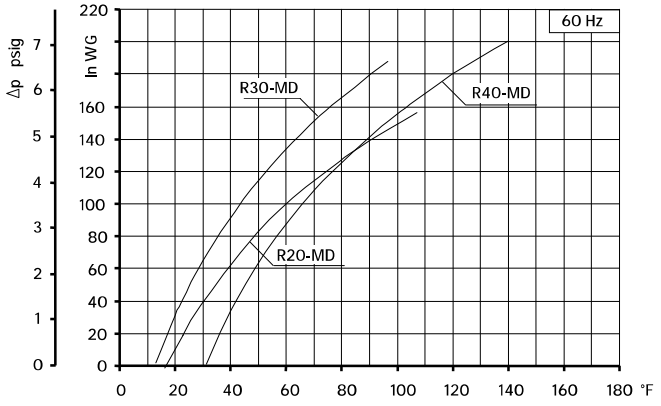

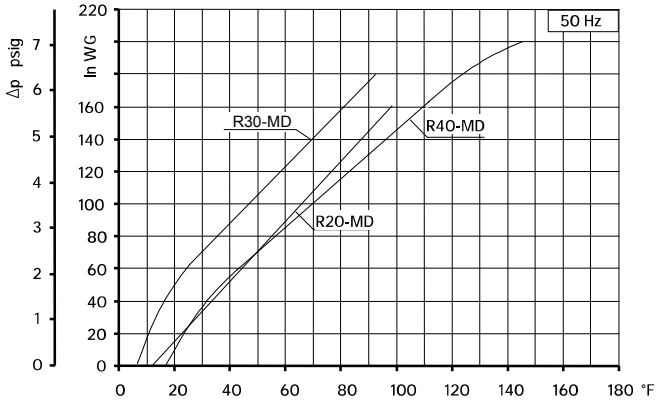

Curves refer to air at 68°F temperature and 29.92 In Hg atmospheric pressure (abs) measured at inlet port.
Values for flow, power consumption and temperature rise: +/-10% tolerance.
Data subject to change without notice.

Safety Valves

SN 1733 -7 1/1

The VRL valves are designed to protect blowers and / or motors from over pressurization or excess vacuum. When there is over pressurization, the valve opens and discharges to the outside. When there is excess in vacuum, the valve opens and takes flow from outside.

The valves have been designed for low pressure / low vacuum, with minimal difference between the initial value at which the valve begins to open and its fully opened position. The valves are supplied with 2 different springs to maximize their efficiency.
These compact valves, made of aluminum alloy, are both easy to install and calibrate, and operate in a wide range of capacities.
The VRL can be plumbed to divert excess primary flow through a secondary external outlet when working in pressure conditions, or to pipe in a secondary flow when working in vacuum.
"HP" valves are used for pressures >240" H2O.

Maximum efficiency is achieved by keeping operating values (flow versus pressure or vacuum) within the operating range (shaded area on graph). Capacity refers to air having a density equal to 0.075 lbs./cu.ft .



VRL6 VRL6 HP | VRL8 VRL8 HP | VRL9

OPERATING RANGE

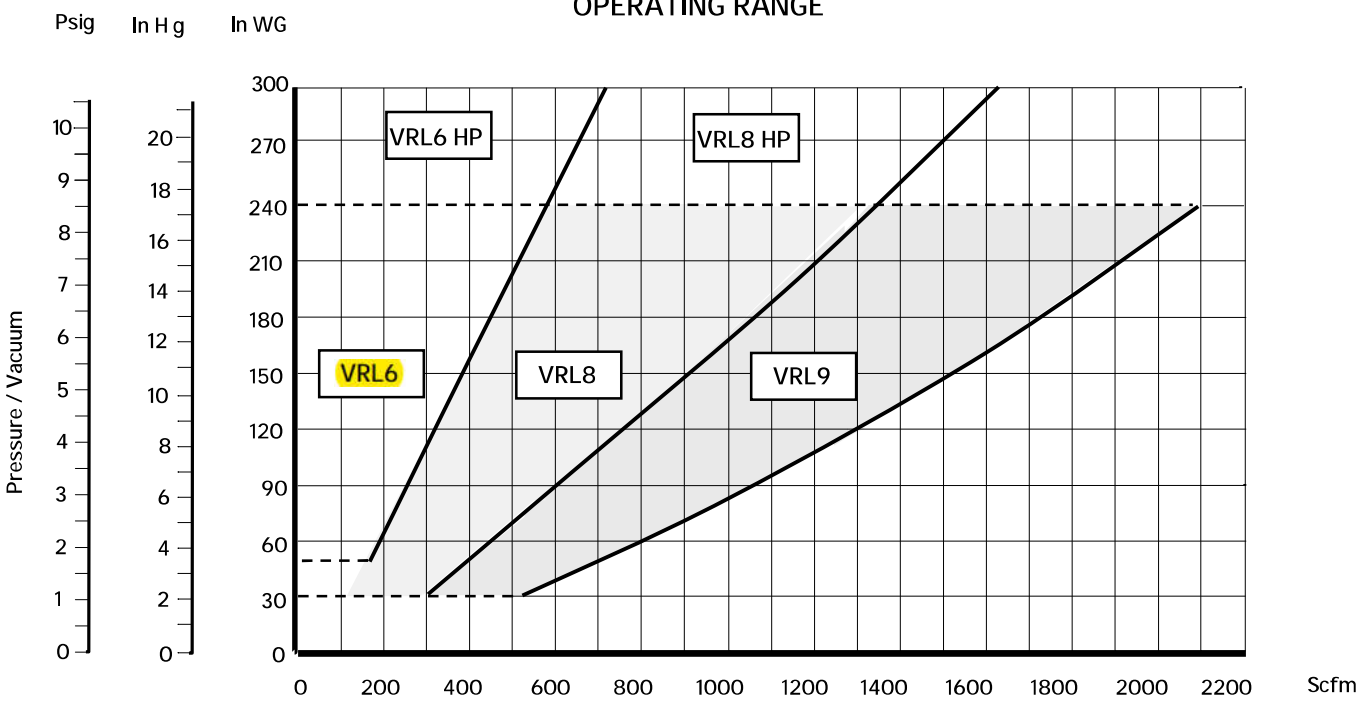

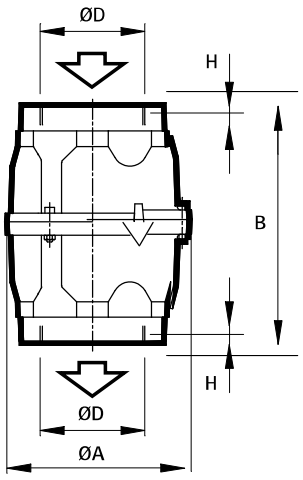

OVERALL DIMENSIONS

TYPE	ND	D	A	B	H	WEIGHT (Lbs)
VR6 & VRL6 HP	2"	2" NPT	4.02	6.90	0.47	1.9
VRL8 & VRL8HP	3"	3" NPT	5.31	7.48	0.59	4.2
VRL9	4"	4" NPT	6.30	8.11	0.71	5.7

- Dimensions in inches.
- Specifications subject to change without prior notice.

VRL valves are supplied uncalibrated - contact FPZ for calibration options.

FPZ, Inc. 150 N. Progress Drive Saukville, WI 53080 USA Tel. (262) 268-0180 usa@fpz.com www.fpzusa.com

Gauges, Check Valves, Silencers, Enclosures

SS1708

Gauges

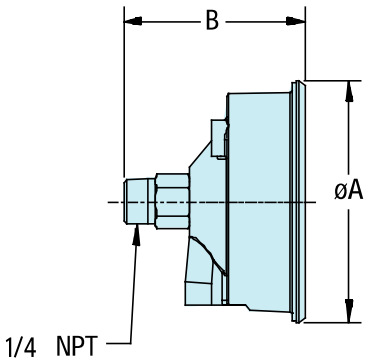

Gauges are important for monitoring the operating pressure or vacuum of the blower. Gauges should be positioned as close to the blower as possible.

*				

Dimensions in inches. Tolerance on given values ± 10% - unbinding and can be changed without prior notice.
*

Check Valves

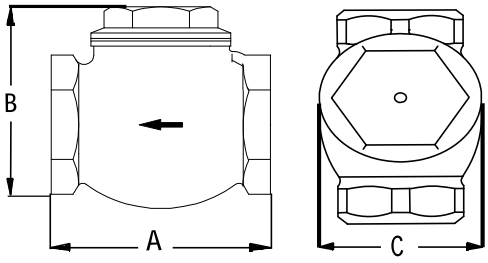

Swing check valves allow air to flow in one direction. These valves prevent backflow into the blower and are supplied in bronze or brass.

Dimensions in inches. Tolerance on given values ± 10% - unbinding and can be changed without prior notice.

Silencers

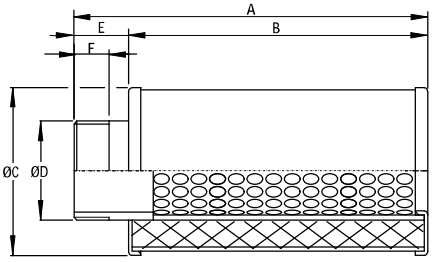

Silencers provide additional sound attenuation.

TYPE	D	A	B	C	E	F	lbs
SS 4	1" 1/4	7.5	5.5	2.8	2	0.6	0.8
SS 5	1" 1/2	7.9	6.7	3.1	1.2	0.8	1.1
SS 6	2"	9.1	7.9	3.5	1.2	0.8	1.3
SS 8	3"	19.1	15.7	6.0	3.3	0.8	4.8
SS 9	4"	18.3	16.9	6.7	1.1	0.8	9.9

Steel manufactured (apart from SI 9 / SS 9 - entirely in aluminium) with sound absorbing polyurethane element.
Dimensions in inches. Tolerance on given values ± 10% - unbinding and can be changed without prior notice.

Sound Enclosures

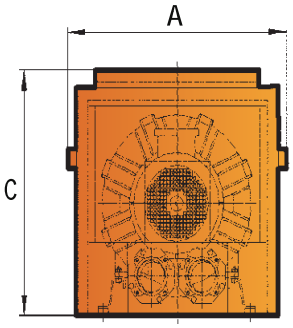

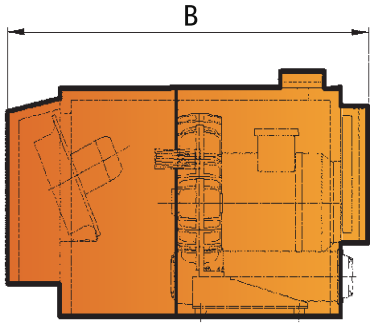

Part #	Used on models	A	B	C
IH1	SCL KO3-MS	13.4	18.2	15.8
IH3	SCL KO4-MS	14.3	19.7	16.5
IH5	SCL KO5-6 MS + 30-40DH	16.9	26.8	21.3
IH7	SCL KO7-8 MS / MD	31.7	64.4	26
IH8	SCL KO7-8 TD	31.7	64.4	26
IH9	SCL KO7-8 TS	31.7	64.4	26
IH10	SCL KO9-12 MS/MD	31.7	67.2	30
IH11	SCL KO9-10 TD	31.7	67.2	30
IH12	SCL K11-TD	31.7	67.2	30
IH13	SCL KO9-11 TS	31.7	67.2	31.5

Dimensions in inches - unbinding and can be changed without prior notice.

Inlet Filters

SS1905

FPZ inlet filters are used for pressure applications. The inlet filters combine filtration and sound attenuation into a compact package. Inlet filters consist of a filter cartridge enclosed by a carbon steel weather hood. Elements are easily serviceable by simply removing the weather hood.

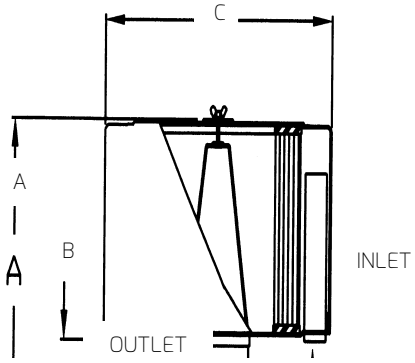

Dimension tolerance ± 1/8"



VG-020-013



FEATURES & SPECIFICATIONS

- Polyester: 99%+ removal efficiency standard to 5 micron. (Other media available upon request.)
- Fully drawn weather hood - no welds to rust or vibrate apart
- Tubular silencing design - tube is positioned to maximize sound attenuation and air flow while minimizing pressure drop
- Durable carbon steel construction with baked enamel finish
- Filter change out differential: 10"-15" H_2O Over Initial Delta P.

OPTIONAL DIRTY FILTER INDICATOR

The **VG-020-013** dirty filter indicator is used to maximize filter life for pressure applications only. The yellow indicator in the site window drops as dirt accumulates on the filter element. The element is ready for change out or servicing when the yellow indicator reaches the red zone. The filter condition can be determined without removing the weather hood even after the blower has been shut down.

The indicator can be mounted in the inlet piping between the blower and filter or directly to the filter housing by having a 1/8" npt tap installed in the hood. If a tap is required, FPZ part number **M020*** should be ordered.

Polyester Element	NPT	Dimensions (Inches) A	B	C	Used on Models	Approx Wt. Lbs
FS-15-050	½"	4	1 ½	6	10DL	2
FS-15-075	¾"	4	1 ½	6	15DH	2
FS-15-100	1"	4	1 ½	6	06	2
FS-19P-125	1 ¼"	6 5/8"	1 5/8"	6	K03-MS, R20-MD, R30-MD, R40-MD	3
FS-19P-150	1 ½"	6 5/8"	1 5/8"	6	K04-MS	4
FS-31P-200	2"	7 ¼"	2 ¼"	10	K05-MS, K05-TD	8
FS-231P-200	2"	12 ¼"	2 ¼"	10	K06-MS, K06-TD, K07R-MD, K08R-MD	14
FS-231P-300	3"	13"	3"	10"	K07-MS, K05-TS, K07-TD	15
FS-235P-300	3"	13"	3"	16"	K08-MS, K06-TS, K08-TD	29
FS-235P-400	4"	14"	4"	16"	K09-MS, K10-MS, K09-MD, K10-MD, K11-MD, K12-MD, K09-TD, K10-TD	30
FS-245P-400	4"	14"	4"	16"	K07-TS, K08-TS, K11-MS, K12-MS, K11-TD, K12TD	31
FL10**	NA	14 3/8"	1 3/8"	16 3/16"	K09-TS, K10-TS, K11-TS, K12-TS,	18

*M020 1/8" npt filter tap will be added to filter part number suffix if ordered.

**FL10 utilizes 15 micron paper element and does not include tubular silencers. FL10 filters are normally ordered with CA10

FPZ S.p.A.
Via F.lli Cervi 16
20863 Concorezzo (MB), ITALIA
Tel. +39 039 690981
info@fpz.com www.fpz.com

COMPRESSORI-ASPIRATORI A CANALE LATERALE — ISTRUZIONI — I
LATERAL CHANNEL BLOWERS-EXHAUSTERS — INSTRUCTIONS — GB



WARNING

Leggere e seguire le istruzioni prima dell'uso e conservare il manuale come riferimento per il futuro. Il mancato rispetto di tutte le istruzioni del produttore, inclusa l'installazione impropria o l'uso improprio del prodotto, le alterazioni del prodotto e/o il mancato utilizzo del prodotto in conformità al presente manuale, possono causare danni, lesioni gravi o morte. — I

Read and follow all instructions before use and keep manual for future reference. Failure to comply with all manufacturer's instructions, including improper installation or use of the product, alterations to the product, and/or failure to use the product in accordance with this manual can result in property damage, serious injury or death. — *GB*

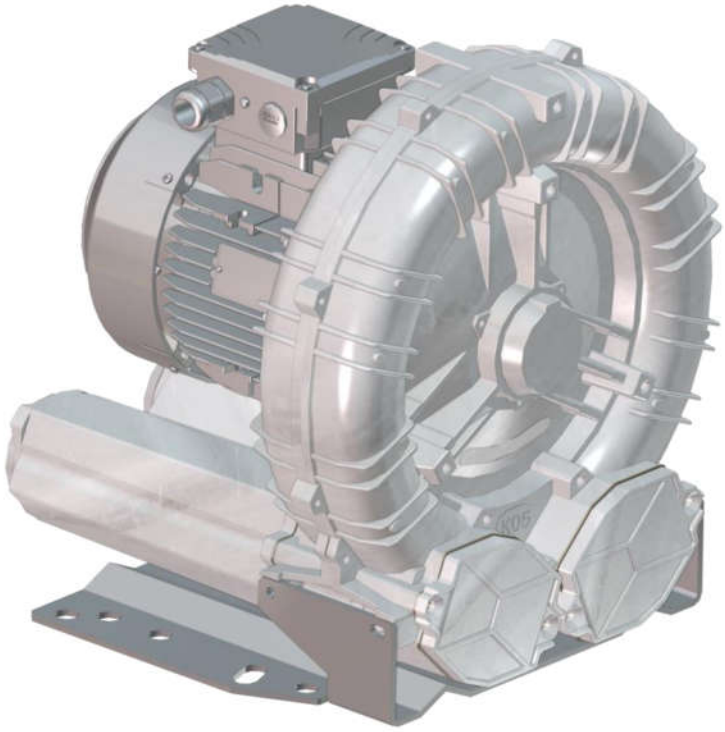

Per ulteriori informazioni o assistenza all'installazione, prego contattare:
For further information or assistance with installation, please contact:

@ service@fpz.com +39 039 690981

COMPANY WITH
QUALITY SYSTEM
CERTIFIED BY DNV GL
= ISO 9001 =

FPZ S.p.A.
Via F.lli Cervi 16
20863 Concorezzo (MB), ITALIA
Tel. +39 039 690981
info@fpz.com www.fpz.com

Table of contents

1 GENERAL INFORMATION 3
1.1 PURPOSE OF MANUAL 3
1.2 TECHNICAL DATA – NAMEPLATE 3
1.3 TESTING, WARRANTY AND LIABILITY 3
2 SAFETY RULES 4
2.1 IMPORTANT SAFETY INFORMATION 4
2.2 PROHIBITIONS 4
3 PROPER AND IMPROPER USE 5
3.1 OPERATING CONDITIONS 5
3.2 STANDARD SIDE CHANNEL BLOWER 5
3.3 ATEX BLOWERS (Category 3GD – Category 2G) 5
3.4 IMPROPER USE AND ASSOCIATED RISKS 6
4 STORAGE AND TRANSPORT 7
4.1 RECEIPT AND CHECK OF THE PACKAGE 7
4.2 HANDLING AND TRANSPORT 7
4.3 STORAGE 7
5 INSTALLATION 7
5.1 INSTALLATION CONDITIONS 7
5.2 BLOWER WITHOUT ELECTRIC MOTOR (GOR – GVR EXECUTION) 9
5.3 ATEX 2G BLOWER (EXCLUDED TMD VERSION) 9
5.4 GOR TMD ATEX 2G BLOWER 9
5.4.1 INSTALLATION OF SENSOR GOR TMD ATEX 2G BLOWERS 10
5.4.2 CONNECTION OF THE MECHANICAL SEAL FOR GOR TMD ATEX 2G BLOWER 11
5.5 ELECTRIC MOTOR 12
5.5.1 ELECTRIC CONNECTION 12
5.5.2 ELECTRIC MOTOR POWERED BY FREQUENCY CONVERTER 13
5.5.3 ROTATION DIRECTION 13
6 START UP AND NORMAL OPERATION 13
6.1 PRELIMINARY CHECKS 13
6.2 OPERATION 13
6.3 STOPPING 14
7 MAINTENANCE 15
7.1 MAINTENANCE AND FAILURE CONDITIONS 15
7.2 PERIODICAL CHECKS 16
7.3 ROUTINE MAINTENANCE REPAIR OF BREAKDOWNS 16
7.4 LIFESPAN OF BEARINGS 17
7.5 DISMANTLING AND DEMOLITION 17
8 RESIDUAL RISKS 17
9 TROUBLESHOOTING 18
10 REFERENCES 19
11 INSTALLATION DIAGRAMS 20

FPZ S.p.A.
Via F.lli Cervi 16
20863 Concorezzo (MB), ITALIA
Tel. +39 039 690981
info@fpz.com www.fpz.com

1 GENERAL INFORMATION

Read the manual for safety information on correct installation, operation and maintenance.

1.1 PURPOSE OF MANUAL

- The purpose of the manual is to complete the information contained in the *operative instructions* (Figure 1*)* supplied with the blower in order to give "instructions for use" to the skilled operator to prevent and minimize risks during the interaction between man and machine.
- For safe installation, carefully read this manual before installing the product and follow all instructions exactly as shown.
- The information was prepared by the manufacturer in the original language (ITALIAN) considering the content communication effectiveness for the interested parties also depending on the operator's qualifications and perspicacity.
- Keep the *operative instructions* (Figure 1*)* for the entire service life of the unit in a known and easy to access place to make it always at hand for reference.
- Any observations made by recipients can be an important contribution to improve the after-sales services provided by the manufacturer.
- The information contained in this manual is intended for use by specialized operators whose definition is contained in the document MAN_PIC (Figure 2).
- For electric components and motors that may be installed to the blower, please refer to the manuals of their own manufacturers.

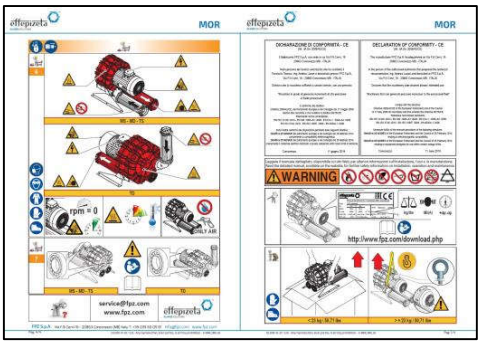

Figure 1 – *Operating Instruction*



Figure 2 - Document MAN_PIC

1.2 TECHNICAL DATA – NAMEPLATE

On the product nameplate are stated:

• Unit description • Performance (Noise [dB], Flow [m^3/h] and Pressure [mbar]) at 50 Hz and 60 Hz frequency referring to 20°C and 1013 mbar abs. • Serial number and year of manufacture • Reference Doc. (*Operating Instruction)* • Weight [kg/lbs] • Reference temperature for the working blower (T. amb.)	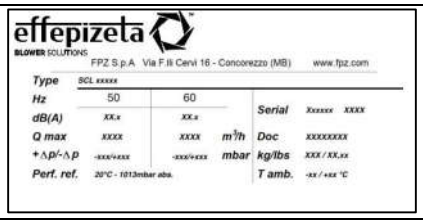

It is strictly forbidden to remove or tamper with the product label.

1.3 TESTING, WARRANTY AND LIABILITY

Testing and inspection

- The entire unit is sent to the customer ready for installation, after passing the tests and inspections required by the manufacturer, in conformity with the applicable laws and the mandatory technical standards.

Warranty

- Warranties are defined in the general terms and conditions of sale.

Liability

- See document MAN_PIC.

2 SAFETY RULES

2.1 IMPORTANT SAFETY INFORMATION

WARNING	**The instructions listed below must be read carefully and become a fundamental part of daily procedures in the normal use and maintenance of all the equipment, in order to prevent any kind of personal or domestic animals (even serious) injury (or death) or damage to equipment.**

- Do not start the unit until its operation is clearly understood.
- All installation, commissioning and maintenance operations must be carried out by specialized operators only (see doc MAN_PIC).
- Keep the area around the unit constantly free of obstructions.
- Use appropriate PPE (Personal Protective Equipment) such as boots, gloves, goggles and work clothes.
- Pay attention to all danger and caution signs placed on the unit.
- Do not wear clothes, jewellery or accessories that can get caught in the cooling fan of the electric motor or that can be sucked into the blower.
- Do not modify the electrical connections on the unit.
- Observe all local, state and national electrical codes.
- Before starting the unit and/or with weekly frequency, the operator must check the efficiency of the devices that ensure the operation of the unit and any other unit defects. In case of any defects, immediately notify FPZ S.p.A.
- Devices that ensure the operation of the unit must never be removed or rendered useless.
- During maintenance or repair work, it may be necessary to exclude some mentioned devices from the service. This operation must be carried out by specialized operators only (see doc MAN_PIC).
- Always apply and enforce the safety rules; in case of any doubts, always consult this manual before acting.

WARNING	**Non-compliant installation with the unit's intended use can cause personal (even serious) injury (or death) or damage to equipment.**

The unit must only be started:

- in conformity with the purposes of use, transport and handling specified in "FORESEEN USE";
- respecting the values given in the nameplate data.

2.2 PROHIBITIONS

WARNING	**Failure to comply the following PROHIBITIONS can cause personal (even serious) injury (or death) or damage to equipment.**

- NEVER suck up and convey aggressive, corrosive, and/or harmful fluids.
- NEVER use the unit under conditions that differ from those indicated on the nameplate.
- NEVER use the unit without having installed a suction filter.
- NEVER operate with the suction and/or delivery openings closed.
- NEVER make conversions or changes to the unit, maintenance or repair work on one's own initiative or not envisaged in the manual. Maintenance work can be carried out only in compliance with what is described in this user manual, exclusively by specialized operators (see document MAN_PIC).
- NEVER use the unit in places where ATEX classification does not comply with Annex II of Directive 1999/92/EC.
- NEVER use the unit without having first installed and connected the sensors and/or regulators required to the plant and correctly installed and checked the seal system of the machine.
- NEVER use the unit with ambient temperatures below -15°C (+5°F) and above +40°C (+104°F).
- NEVER use the unit before ensuring correspondence between grid voltage and motor label voltage.

3 PROPER AND IMPROPER USE

3.1 OPERATING CONDITIONS

WARNING **Failure to observe the temperature, altitude, differential pressure and filtering modes for design and operation specifications there can be an impeller break which can cause personal (even serious) injury (or death) or damage to equipment .**

- The maximum permissible differential pressure indicated on the product nameplate must never be exceeded.
- It is important to install the unit at a maximum altitude of 1000 m (3300 ft.) above sea level, for higher altitudes contact FPZ.
- The unit is designed to operate at ambient temperature between -15°C (+5°F) and +40°C (+104°F).
- In case of suction in the environment or on the plant, protect the suction pipe using a suitable filter with a maximum degree of filtration of 25µm. Contact FPZ for filters with a different filtration degree. Check the compliance with the data of maximum pressure/vacuum listed on the nameplate. For ATEX blower we recommend an ATEX filter with a filtration degree of 20 µm / 25 µm.
- Installation, operation and maintenance of the blower must be carried out by specialized operators (see document MAN_PIC). Due to incorrect maintenance or an unauthorized modification, a non-compliant condition of use is determined, so the responsibility lies with the customer or end user.

NOTICE If installed outdoors, protect the unit against exposure to sunlight and to atmospheric agents.
If the flow rate has to be reduced, use a draw-off valve rather than throttling back the suction or delivery lines.

3.2 STANDARD SIDE CHANNEL BLOWER

FPZ side channel blowers / exhausters are designed to generate vacuum and overpressure for conveying non-explosive, non-flammable, non-dangerous gases and air in continuous use in a non-explosive environment. Side channel blowers are not designed to transport dusts of any grain size.

FPZ side channel blowers / exhausters are designed and built for use in industrial plants and are equipped with three-phase or single-phase asynchronous bipolar electric motors in compliance with IEC 60034-1.

3.3 ATEX BLOWERS (Category 3GD – Category 2G)

Atex blowers are designed and built in accordance with 2014/34/UE Directive and European standards EN 1127-1, EN 80079-36, EN 80079-37, EN 14986, considering the compatibility of unit components with treated fluids (contact FPZ for components compatibility details). Accessories and monitoring systems linked to the unit have to be compliant with 2014/34/UE Directive.
It is recommended that the connections and suction and delivery pipes are in metal or antistatic material.

Units are group II devices for use in environments classified as explosive for the presence of Gas (G) zone 1/2 and/or Dust (D) zone 22.

- For motors that may be installed to the blower refer to the Atex complementary instructions of the motor manufacturer.
- In case the blower is disposed vertically, thus standing on the cover, foreign objects shall be prevented from falling into the ventilation openings. If necessary the motor can be provided of a fan cover with protecting canopy.
- If not specifically indicated, the ATEX label refers to the equipment “indoor” and “outdoor” area.
- In the case of a double indication separated by the “/” symbol, the first number indicates the “indoor” category (internal surface of the blower), the second number the “outdoor” category (outside of the blower, including the electric motor).
- The blower protection mode is constructive (“EX **c**”).
- Electric motors have different protection modes depending on the category and the environment they are designed for.
- All “2G” e “3/2G” configurations have explosion-proof motors (EX d protection).
- Classification of work zones:

1	Use of blower for conveying flammable gas	**Equipment with internal potentially explosive atmospheres, intended for use in areas that are not classified**	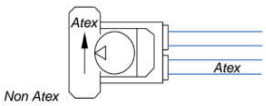
2	Use of blower for conveying non-hazardous fluids in ATEX classified environment	**Equipment with internal non-explosive atmospheres and intended for use in areas that are classified**	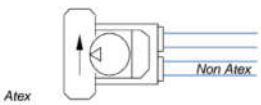
3	Use of blower with suction of ambient air and operating in a classified zone	**Equipment with internal explosive atmospheres, interfaced with process atmospheres and intended for use in areas that are classified**	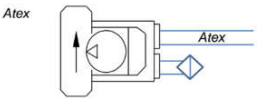

3.4 IMPROPER USE AND ASSOCIATED RISKS

WARNING **Non-compliance with the unit's intended use or with prohibitions/obligations can cause personal (also serious) injury (or death) or equipment damage.**

- Listed below are some improper uses, identified through risk assessment and experiences. Improper uses are subdivided according to the conditions that they may generate.
- The list is a non-exhaustive and representative example of improper use and associated risks.

IMPROPER USE	POSSIBLE CONSEQUENCES	RISKS
IMPROPER USE LINKED TO NORMAL OPERATION		
Absence of cyclic monitoring and control.	Anomalous operation not detected / hidden.	Risk of damage to the unit, with possible injury (or death) for the operator if present nearby.
Different installation with respect to manufacturer's suggestion.	Yielding / break of fastening points.	Risk of damage to the unit, with possible injury (or death) for the operator if present nearby. The unit may fall or be subject to damage due to incorrect load at support.
Operation outside the performance indicated on the blower and electric nameplate.	Seizure of the impeller.	Risk of damage to the unit, with possible injury (or death) for the operator if present nearby. The unit may break.
Proceeding at all stages without consulting the *operating instructions* and this manual.	Using the unit for unforeseen purposes and without considering the associated risk factors.	Risk of damage to the unit, with possible injury (or death) for the operator if present nearby.
IMPROPER USE LINKED TO METHODS OF USE		
Use of a fluid different from that indicated / forbidden.	Incorrect workload.	Risk of damage to the unit, with possible injury (or death) for the operator if present nearby. The unit may break.
Physical load applied to the machine (no element excluded).	Breakage and/or presence of leakage of fluid collected.	Risk of damage to the unit, with possible injury (or death) for the operator if present nearby due to inhalation of harmful substances.
IMPROPER USE LINKED TO THE STOPPAGE OF A BLOWER		
Manipulation of the machine still rotating / moving.	Direct contact of the operator with moving parts and with the surface unit still hot.	Risk of possible injury for the operator such as burns and entanglement.
Disconnecting the unit from the electricity with the voltage inserted.	Direct contact of the operator with the live parts.	Risk of possible injuries for the operator through electrocution.
IMPROPER USE LINKED TO MAINTENANCE WORK		
Handling the machine differently from instructions for use.	Falling or sudden movement of the unit.	Risk of damage to the unit, with possible injury for the operator if present nearby.
Use of liquid during unit cleaning operations.	In case of stagnation, characteristics of the material may be compromised.	Risk of damage to the unit, with possible injury for the operator if present nearby.
Use of types of spare parts different to those supplied by FPZ.	Different performance from design (pressure, noise, vibration, sealing).	Risk of damage to the unit, with possible injury for the operator if present nearby.
BREAKDOWN AND EMERGENCY CONDITIONS		
Not stopping the machine when it is making an unusual noise.	Seizure of the impeller and overheating of the unit and of the electric motor.	Risk of damage for the unit, with possible injury (or death) for the operator if present nearby. The unit may break down.

4 STORAGE AND TRANSPORT

4.1 RECEIPT AND CHECK OF THE PACKAGE

- When receiving the unit, it is necessary to check that the packaging is intact and free from signs of damage due to transport or storage conditions.
- In the case of damage to the packaging, immediately inform the shipping agent and the manufacturer.

4.2 HANDLING AND TRANSPORT



Danger of crushing and / or impacting various parts of the body

During the transport and handling phases due to the sudden drop or displacement of the packaging, there may be a risk of crushing and / or impacting various parts of the body. During the activities around the unit, the operator may fall due to stumbling or slipping.
Use equipment compliant with the laws and follow the handling and manual handling procedures described in the operating manual, based on the weight indications on the packaging and in accordance with applicable regulations in the state in which this activity takes place. Use safety shoes during this phase.

4.3 STORAGE

- Store in a dry place, possibly keeping the machine in the packaging.
- Do not remove the protective covers of the openings.
- In the event of long-term storage, remove dust deposits on external surfaces and, before commissioning, check the unit's functional status with a start-up test.

5 INSTALLATION

5.1 INSTALLATION CONDITIONS



Commissioning and operation must only take place under the following installation conditions:

- The unit must be completely assembled and intact (not damaged or tampered).
- Silencers must be connected to the pipe system (see *operating instructions*); if silencers are not present, make sure that the connection is made by flexible sleeve.
- The machine must be securely fastened to the predetermined site and in the recommended modes (see *operating instructions*).
- The motor must be connected to a suitable control panel.
- Ensure the visibility of the unit installed from the position of the control elements.



Danger of ejection of objects

The entry of foreign bodies into the unit, even if very small, can cause personal serious injury (or death) and/or equipment damage with probable breakage of the impeller blades, including the danger of debris can be thrown out of the machine violently.
Remove the closure caps from the silencers and connect the pipes of the system, making sure to carry out the operation in a non-dusty area to prevent the entry of foreign bodies.



Danger of crushing and / or impacting various parts of the body

During the installation phase due to the sudden drop or displacement of the packaging, there may be a risk of crushing and / or impacting various parts of the body. During work around the unit, the operator may fall due to stumbling or slipping. Use the appropriate device (e.g. toe) to hook and lift the unit properly.



Danger of injury to upper limbs

The risk of injury to upper limbs may arise due to a combination of hazards during the mechanical assembly phase and the connection of the machine to the piping. Observe the operating manual to install the unit safely.

- The support surface of the unit must be flat, robust, stable and absolutely levelled.
- It is important that the unit is installed on supports that do not transmit vibration for example structures or antivibration

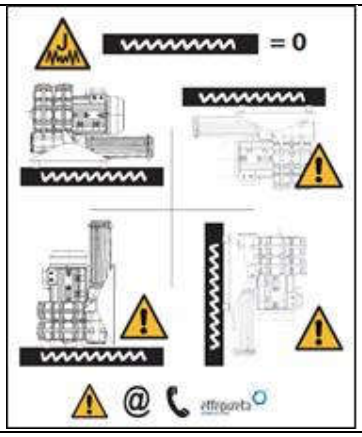

- Connect the pipes with flexible sleeves and avoid the unit bears pipes weight; except for the filter in the case of suction in the environment.

Size the pipes and choose accessories that minimize the load losses, therefore:

- do not fit pipes with diameters smaller than those of the machine's outlets and inlets;
- install multiple machines in parallel, sizing the manifold and main line proportionally;
- do not use angle-pipe, but bends with a large radius of curvature;
- do not install valves with passages smaller than the nominal value and check valves with a stopper pushed by a spring (the check valve with the lowest load loss is the type with a light disc);
- in the case of use for oxygenation, choose low-resistance diffusers (low load loss).

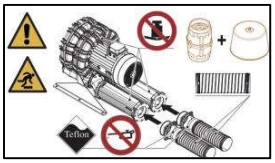

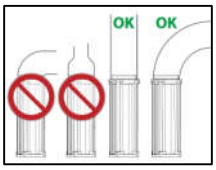

⚠WARNING	To avoid overloads caused by pressure variations, it's recommended that you install a relief valve on aspiration in the case of operation as suction, and on discharge in the case of operation as a compressor.
⚠WARNING	If you need to reduce the flow rate, use a branch valve instead of throttling the suction or discharge.
⚠WARNING	Protect the intake duct with a suitable filter with a filtration degree of 25 µm. Foreign bodies are: dust, sand, calcite, impurities in the pipes, cutting blades and shavings, drops and waste from welding, metal burrs, and residues of sealants produced during connection of pipes. Replace the filters regularly.







- When installing outdoors, protect the unit against direct exposure to the sun and atmospheric agents. For outdoor installations without the use of protections contact FPZ S.p.A..
- Ventilation of the motor must not be hampered by obstacles placed in the immediate vicinity. For this purpose, the electric motor air intake must remain free and a minimum distance between the electric motor fan cover and any other structure as defined by the manufacturer of electric motor.
- The unit must be installed at a maximum height of 1000 m a.s.l., for different conditions contact FPZ S.p.A..

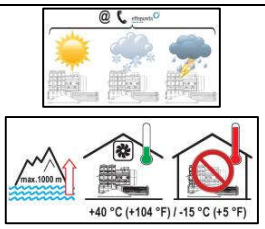

The ambient temperature, and the conveyed gas intake temperature, is permissible inside the range -15°C (+5°F) ÷ +40°C (+104°F) with the following provisions:

- For ambient temperature +30°C (+86°F) **reduce** the maximum pressure differential given in the Data Sheet by 5%;
- For ambient temperature +40°C (+104°F) **reduce** the maximum pressure differential given in the Data Sheet 10%.

The graph on the right has to be used to reduce the maximum pressure differential in case of ambient temperature between +21°C and +40°C (+70°F and +104°F)

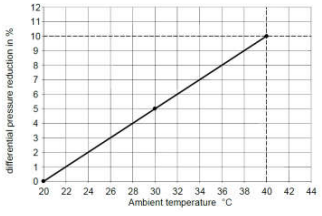

- Check dimensions to allow adequate space for installing the unit with its accessories and ensure sufficient ventilation of the electric motor.

⚠WARNING	In the case of ATEX side channel blower intended for classified areas, the unit must be installed outdoors or in an air conditioned environment.

5.2 BLOWER WITHOUT ELECTRIC MOTOR (GOR – GVR EXECUTION)

NOTICE

Units supplied without an electric motor, GOR execution (with horizontal coupling) or GVR (with vertical coupling) are considered as partly completed machinery, so the designer has to check the compatibility of the electric motor chosen with the data in the data sheets downloadable from the website.
During installation and maintenance, to install or dismantle the elastomeric coupling; it is recommended not to use a hammer, but pushers or extractors, to fit or remove the coupling flanges from the shaft. . Percussion can damage the slope of the bearings by reducing their durability. Coupling requires axial and angular alignment accuracy. Also refer to the coupling instruction manual.

5.3 ATEX 2G BLOWER (EXCLUDED TMD VERSION)

The blower is arranged for the installation of measurement/control systems in order to prevent machine faults that can produce potential sources of triggering:

- pressure sensor
- temperature sensor.



Danger of explosion. The unit is designed to convey flammable gas and is sealed. Do not start the machine before connecting and activating the unit and surveillance system

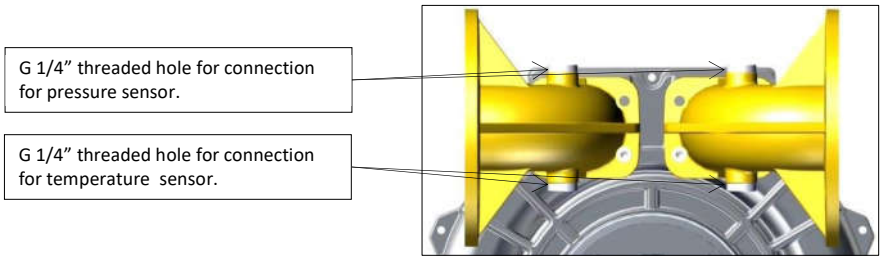

Pressure sensor



ALWAYS use a pressure sensor

Given the likelihood of an explosive atmosphere, the use of pressure measuring instruments is compulsory in order to check that the difference between the delivery and suction pressures respects the levels given in the "specifications" and on the machine's rating plate.

NOTICE

The use of an alarm and stop device (non-automatic reset) that automatically shuts off the power to the machine is advisable.

Temperature sensor

A possible temperature sensor is deemed functional for the customer's measurement needs, but can in any way replace the pressure sensor for monitoring any dangerous machine conditions.

WARNING

All the sensors must be protected against possible impacts, damage and atmospheric agents.

5.4 GOR TMD ATEX 2G BLOWER

The blower is designed for the installation of control systems which must be set up by the installer for the purpose of monitoring machine breakdowns which could produce possible sources of combustion:

- vibration sensor;
- pressure switch / vacuum switch;
- thermostat.

The mechanical seal installed also requires the following operations:

- refilling of the oil tray, as indicated below;
- connection of the oil level sensor.

If necessary, in order to avoid overloads caused by pressure variations, provide a vent device in conformity with EN 1127-1 branching off from the suction pipe, in the case of operation as a suction pump, and on the delivery pipe, in the case of operation as a compressor.

5.4.1 INSTALLATION OF SENSOR GOR TMD ATEX 2G BLOWERS

Install the machine on the plant. Fit the sensors (suitable for the purpose and especially for the Atex environment in question) in their places and connect them to the control system as specified in the instructions provided with the sensors and as required in the plant diagram:

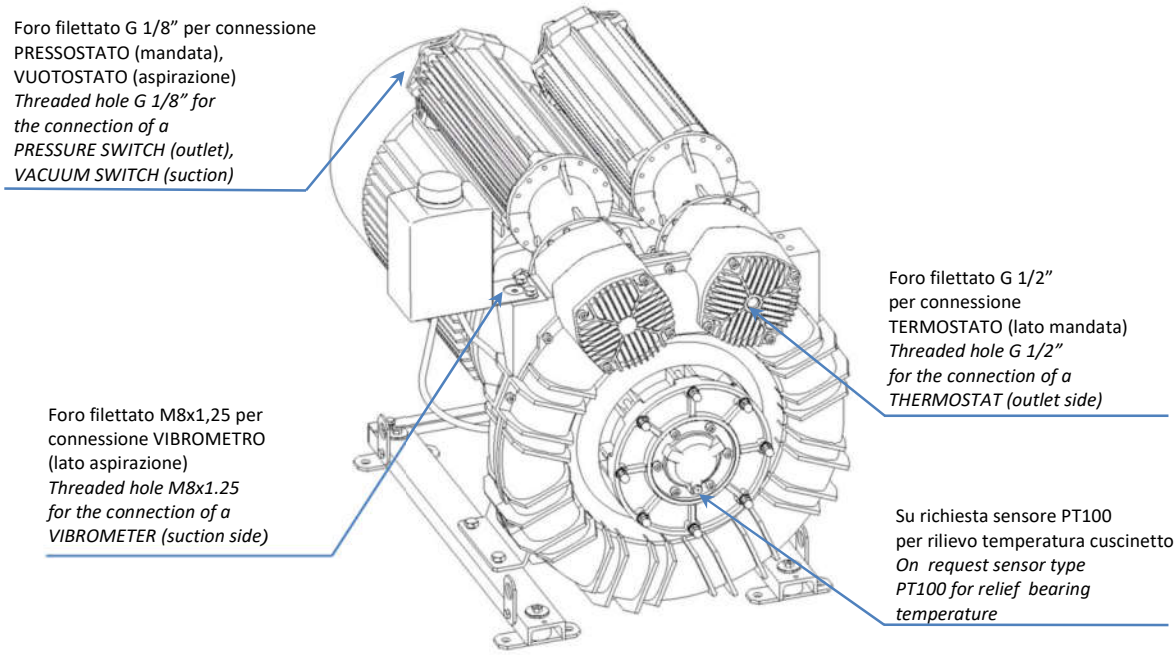

- Vibration sensor

The signal from the sensor must monitor the vibrations of the machine constantly. This signal must be connected to an alarm and block device with manual reset, which automatically interrupts the power supply to the compressor/suction pump at the moment the level of the vibration signal exceeds the predetermined limits.

Effective vibration velocity value [mm/s]	***Class I*** (≤ 15kW)
a<**2.2**	***A***

Effective vibration velocity value [mm/s]	***Class II*** (> 15kW)
a<**3.5**	***A***

- Pressure switch and vacuum switch

The pressure or vacuum switch installed must be calibrated to the maximum pressure or vacuum level specified on the plate of the machine or in accordance with the operating limits of the plant.
The signal must be connected to an alarm and block device, with manual reset, that automatically interrupts the power supply to the machine.

- Thermostat

The thermostat must be set to come on at a temperature not exceeding 125°C to interrupt the power supply to the machine automatically.
The signal must be connected to an alarm and block device, with manual reset, that automatically interrupts the power supply to the machine.

⚠WARNING **All sensors installed must be protected against impact, damage and weathering**. FPZ can supply a protective casing, on request and after receiving the dimensions of the sensors installed.

5.4.2 CONNECTION OF THE MECHANICAL SEAL FOR GOR TMD ATEX 2G BLOWER

	**Danger of slipping**
Oil spills can make the floor slippery. Clean the floor with absorbent and /or degreasing products.	

	**Danger of electrostatic charges**
Do not clean or rub the oil reservoir with dry clothes.	

- Refilling the cooling oil tray

Refill the cooling circuit of the mechanical seal. For good circulation of the cooling liquid, it is important not to have air bubbles inside the circuit. To achieve this, refill by pouring the liquid into the vessel repeatedly in small amounts without exceeding level (B) of the return line. Top up completely only when the level at the return line has covered the bottom of the vessel.

The cooling liquid must be kept at least 10 mm above the level of the return line (B); top up as necessary.

Recommended cooling liquid:	SAE 10W-40 oil Or SAE 5W-40 oil
First filling quantity:	Approx. 1,5 kg

A small leak of fluxing liquid is normal, especially when the seals are settling down.

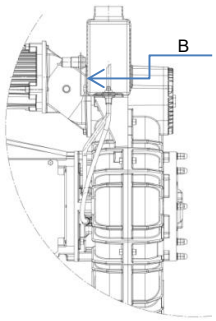

- Connection of the cooling oil level sensor

The capacitive oil level sensor consists of a stainless steel cylindrical body and is suitable for use in explosion risk zones. It is fitted with a potentiometer to regulate sensitivity and a LED display on the back end, which is normally on.

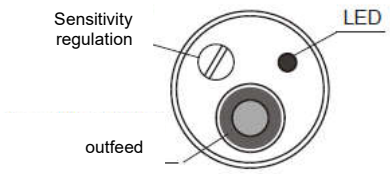

This sensor must be connected to an alarm and block system with manual reset which automatically interrupts the power supply to the machine. Connect the sensor to the control system following the specific instructions enclosed with this manual.

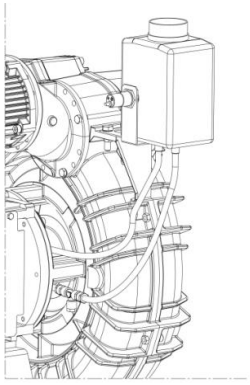

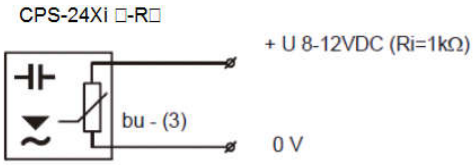

Note: the connection cable must not be cut or tampered with.

5.5 ELECTRIC MOTOR

WARNING	**Comply with safety measures and instructions indicated in the instruction manual for the electric motor.**

Before starting working on the unit or system, the following precautions must be taken:

- make sure that the unit is NOT connected to electrical power mains;
- take precautions to prevent electricity from being reconnected;
- open the terminal box only after making sure that there is absolutely no live current.

	Danger due to electricity

- If connecting operations are carried out without removing the voltage from the electrical system or without setting up a system to avoid reinsertion, direct contact between the operator and the live parts can occur. This can also cause personal serious injury (or death).
- Work on electrical equipment (installation and maintenance) has to be done only by specialized operators (see document MAN_PIC), wearing PPE.
- In the event of contact with a defective unit there is a risk of electrocution. Always have seals and electrics checked regularly by a specialized operator (see document MAN_PIC).
  - The terminal box must not contain foreign bodies, impurities or humidity. Close the terminal box with the cover, and seal the cable gland openings to prevent dust, water and humidity from getting inside.

NOTICE	In the case of several motor starts during an hour, there is a limitation of 6 start-ups per hour, evenly distributed; failure to respect this can severely damage the unit.

5.5.1 ELECTRIC CONNECTION

Incorrect motor connection may seriously damage the unit.

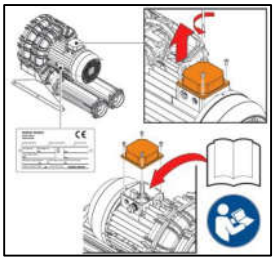

- Check that the details on the data plate are compatible with the line voltage and frequency.
- Always connect the motor's earth cable to the relevant terminal marked with this symbol before connecting to the mains supply and check the dispersion capacity. The earth cable can be recognized by its color (yellow/green).
- Connect the machine to the earth system too, using the specific hole (marked with the relative symbol) located on the base of the unit. Connection to the power grid must be carried out in compliance with what is shown in the diagram inside the terminal box.
- Use the cable gland openings to allow power supply cables to pass into the terminal box.
- Proceed to tighten the power supply cables, taking the section of the electrical cables into account each time.
- The terminal boards for the electrical connections must be tightened properly to avoid high contact resistances and resulting overheating.
- Check that the insulation gaps between the various conductors are kept in the air and between surfaces, as indicated in the standards.
- All the screws used to close the terminal board must be tightened properly. Damaged screws must be replaced immediately, using screws of the same or better quality.

The connection must guarantee:

- long-lasting safety;
- that no wire ends are sticking out;
- protection with a (thermal or amperometric) trip switch is essential for dealing with risks of overloading, a loss of one phase in the mains supply, excessive voltage fluctuations, or the rotor getting stuck;
- that the motor trip switch has been set to a value that does not exceed the maximum current level shown on the nameplate. Warning: the trip switch does not always protect the blower in case the maximum pressure differential is exceeded. Verify the maximum pressure or vacuum as per chapter 6.2.
- motors may be equipped with thermal protectors PTO or PTC. To avoid that the motor is damaged by temperature rise over the admissible limit: PTO or PTC have to be connected to a suitable cut off device that opens the line that feed the motor itself.
- if the application requires protection against accidental start-up, this must be carried out on the electrical control circuit of the motor.

5.5.2 ELECTRIC MOTOR POWERED BY FREQUENCY CONVERTER

The unit's nominal pressure or vacuum characteristics for service at mains frequency cannot be maintained if the unit is powered via a frequency converter. Contact FPZ S.p.A. for information about the performance of a unit powered by a frequency converter. Download from the website www.fpz.com the "RPM Table" of your blower and do not exceed the maximum pressure differentials shown for every rotation speed.

When power is supplied with a frequency converter, the installer is responsible for:

- respecting the laws;
- checking with FPZ assistance if the motor can be powered by a frequency converter, if it doesn't appear on data sheet;
- checking and making any measures necessary to comply with the immunity and emission limits set by the standards;
- checking the suitability of the plant and the frequency converter for operation with standard motors (class F), or the need to use specific motors for these types of operation.

5.5.3 ROTATION DIRECTION

The machines must be used respecting the rotation direction indicated by the arrow on the electric motor fan cover.

- To check the rotation direction, switch the motor on briefly and observe the fan.
- To change the rotation direction, invert the power cable connections, leaving the earth connection unchanged.

Refer to the connection diagram located inside the terminal box and to this section.

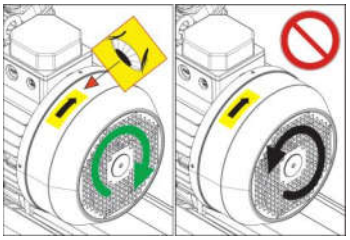

6 START UP AND NORMAL OPERATION

6.1 PRELIMINARY CHECKS

WARNING! Before starting the machine for use, carry out the following preliminary checks:

- if the unit has not been started up for some time, check its condition and, if necessary, remove any dust from the external surfaces, to avoid compromising the heat dissipation during the unit work;
- deactivate/open any pipe closing devices (shut-off valves, solenoid valves, etc.) before starting the unit;
- never start and operate the unit with the inlet and/or outlet ports closed;
- make sure the ambient and conveyed gas suction temperatures come within the levels: -15°C (+5 °F)÷ +40°C (+104 °F);
- check the operation of any flow control/limiting devices (not supplied).

6.2 OPERATION

- If the side channel blower is put into operation without being fixed to a surface, a sudden displacement of the starting torque on ignition of the electric motor may occur.
- The information on the product nameplate must always be considered when commissioning and operating.

The unit can be started for use after carrying out the preliminary checks

- Start the unit by switching on the power to the electric motor.
- Respect the maximum pressure differential stated in the blower's nameplate.
  To evaluate the pressure differential Δp across the blower take into account:
  - For compression operating: add up to the outlet pressure the inlet vacuum if applied.
  - For vacuum operation: add up to the inlet vacuum the outlet pressure if applied.
- Pressure losses in the pipes are often underestimated but are decisive factors for the operating differential pressure.
- Measure the motor absorption and check compliance with the rated nameplate value. An amperage below nameplate does not always guarantee that the blower is not exceeding the maximum permitted pressure differential.

WARNING	**Non-compliance with the unit's use or with prohibitions/obligations can cause personal (also serious) injury (or death) or equipment damage**

	Danger of burns

Danger of burns caused by contact with hot surfaces of the unit, which at start-up and operation may reach high surface temperatures, as specified on the product nameplate.
Apply adequate PPE against the risk of burns.



Danger of suction

Danger of injury due to depression, which can cause a sudden suction of objects, hair and clothes.
Start the machine only if it is properly connected to the system.



Danger of vibration

Regularly check that the unit is firmly fixed to the support frame.
Excessive vibration of the unit can cause serious damage to the machine, such as the seizure of the impeller.



Danger due to noise

Some machines can produce loud noise, even over 80 dB (A).
Reference levels are shown on the table of characteristic data that does not consider environmental reverb.
Warning to be taken:
Measure the acoustic pressure of the machine in the installation environment.
In the case of levels above the threshold defined by local standards:

- report the noise hazard
- prepare the use of PPE
- isolate the environment



Danger of ejection of objects

- Danger due to exceeding performance levels that may cause seizure of the impeller.
  Check that operating conditions are in accordance with values declared on the nameplate.
  Avoid operating with the inlet and/or outlet ports closed even temporarily.
  Install a limit valve or equivalent circuit that can avoid excessive vacuum and / or overpressure and allow the compliance with levels shown on the product plate
- Danger of injury due to objects and fluids aspirated and thrown at high speed (injury to the skin or eyes).
  Only start the unit (first start) if it is properly connected and check it accurately.
  In the case of unusual noise from the impeller, switch off the unit immediately and check it accurately.



Danger of injury to upper limbs

During the start-up (first start) phase due to a combination of hazards, the risk of injury to upper limbs may arise.



Danger of sudden leakage and/or aspiration of fluids (even harmful ones)

They could cause damage to the respiratory system due to the leakage of gas while the unit is in use and/or the slowing down of connection to the gas flow circuit.



Danger due to a limited view of the place in which the unit is installed.

Make sure you always have the unit installed in your sight while carrying out any activities close to it.

6.3 STOPPING

- The unit must be stopped by switching off the power supply to the motor.
- On shutdown, make sure to operate the unit with open outlet (suction / delivery) for about 20 minutes. This operation allows the removal of any condensation inside.

7 MAINTENANCE

In order to prevent faults and damage it is important to check periodically the units in operation; therefore it is advisable to adopt a maintenance plan in line with this manual, providing for:

- periodical checks;
- periodical maintenance.

7.1 MAINTENANCE AND FAILURE CONDITIONS

WARNING **Before starting any maintenance, either periodical or due to malfunction, take the following safety measures in order to prevent personal (also serious) injury (or death) or equipment damage:**

- unplug the unit from the power supply by unplugging the main switch;
- apply a sign to the system and to the control unit **"DANGER! Maintenance work in progress";**
- cool the unit for at least 15 minutes;



- wait until the unit has completely stopped, checking through the motor fan that the impeller is not rotating;

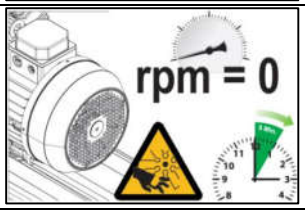

- make sure that there is no depression or overpressure in the unit through a pressure gauge and make sure that no fluid can escape from the unit (through its stopping) and / or the system (through its insulation).

Danger due to electricity

- If connecting operations are carried out without removing the voltage from the electrical system or without setting up a system to avoid reinsertion, a direct contact of the operator with live parts can occur. This can also cause personal serious injury (or death).
- Work on electrical equipment (installation and maintenance) must be done only by specialized operators (see document MAN_PIC), wearing PPE.
- In the event of contact with a defective unit there is a risk of electrocution.

Danger of moving parts

High risk of cuts caused by rotating impellers. By removing the manifolds or blind flanges, it is possible to access the rotating impeller through the openings of the body and the cover of the side channel blower.
Never put your hands or objects through the openings.

Danger of burns

Danger of burns caused by contact with hot surfaces of the unit, which at startup and in operation may reach high surface temperatures, as specified on the product nameplate.
Apply adequate PPE against the risk of burns.

Danger of injury to upper limbs

During the maintenance phase due to use of improper tools, lack of PPE, bad illumination of the workplace or unauthorized start-up, the operator fails to perform the required procedures, the machine can be put into unmanaged operation, and the risk of injury to upper limbs may arise.

Danger due to noise

Some machines can produce loud noise, even over 80 dB (A) therefore the operator may be subject to acoustic pressure which may cause buzzing in the headset and reduced attention.

WARNING **Danger of sudden spillage of gas (also harmful) suction**

Respiratory damage could occur due to gas leakage during operation and / or loosening of the connections to the gas flow circuits.

7.2 PERIODICAL CHECKS

In order to avoid any defects that may directly or indirectly cause damage, it is important that the unit is inspected by specialized operators (see document MAN_PIC).

A) When the unit is running, routinely carry out the following checks:

- delivery temperature;
- operating pressure and/or vacuum;
- electric motor current absorption;
- vibrations;
- state of the filter and related load loss.

WARNING	**Danger of seizure of the impeller due to excess vibration. Vibrations above the threshold (see table below) are considered NOT eligible and can cause damage to the machine and consequently personal injury even serious (or death) and / or damage to things.** **In the event of unusual noise and / or vibration over parameters, that may indicate the possibility the impeller is seizing up, turn off the unit immediately.**

Class I (Blower with electric motor of power ≤15kW)	Class II (Blower with electric motor of power >15kW)
a > 2,2	a > 3,5
a = effective vibration speed level [mm/s]	

Changes to normal working conditions (power ups, abnormal noise, vibrations, excessive overheating of the service fluid) are indications that the units is not working properly.

B) With the unit stopped and cooled, periodically carry out the following checks:

- dust: check and remove deposits from the external surfaces of the unit;
- suction filter (if fitted): every 10-15 days, check and clean or replace the filter cartridge. The dirty cartridge creates strong suction resistance and consequently a higher pressure differential, power absorption and operating temperature;
- for unit supplied with elastic joint, check the condition of the elastic joint as indicated in its operating manual;
- condensation discharge (if present): every 8-10 days, turn the yellow valve counterclockwise 90° to allow draining of the condensation that has built up inside the blower;
- check for oil leaks (TMD version) near the joint; if leaks are found, maintenance work must be scheduled to replace the seals.

7.3 ROUTINE MAINTENANCE REPAIR OF BREAKDOWNS

See the following chapter “TROUBLESHOOTING” for identifying possible critical situations and types of breakdowns.
Always disconnect the unit and remove it from the plant to do routine maintenance, cleaning and replacing components and in the event of a breakdown.

WARNING	**Danger due to residual overpressure or drop in pressure:**

- with residual overpressure, process fluids can leak, with the risk of injury to the skin and eyes;
- with a drop in pressure there is the risk that hair and clothes can be trapped;
- disconnect the unit only after closing and bleeding the system connected to it.

7.4 LIFESPAN OF BEARINGS

Under normal operating conditions, the bearings of the unit must be replaced by a specialized operator (see document MAN_PIC), after a time fixed by the manufacturer (see details in the table below).

NOT ATEX BLOWERS

Every model, except the models at the following line	25000 hours or 3 years
e07 / e08 / e09 / e10 / e11 MS – TS – TD	40000 hours or 5 years

SOFFIANTI ATEX

Every Atex model	18000 hours or 3 years

NOTICE Replace the bearings of the unit only if you have all the instructions, the parts list and the section/explosion of the unit

7.5 DISMANTLING AND DEMOLITION



Danger of crushing and / or impacting various parts of the body

During the dismantling and demolition phases due to the sudden drop or displacement of the packaging, there may be a risk of crushing and / or impacting various parts of the body. During work around the unit, the operator may fall due to stumbling or slipping.

8 RESIDUAL RISKS

During the design of the machines or system on which the blower will be installed, the following residual risks should be considered.



Danger during the transport phase

Danger of crushing or slipping during the unit transport steps. The *operating instructions* (attached to the unit) and this manual describe how to carry out safe transport operations according to tested procedures.



Danger during the installation phase

Danger of crushing or slipping during the installation phases of the unit. The *operating instructions* (attached to the unit) and this manual describes how to carry out safe installation operations and according to tested procedures.



Danger during the start-up and operating phase

Danger of electrocution, burns, noise, unauthorized start-up of the unit, and ejection of objects or fluids during the start-up and operation phases of the unit. The *operating instructions* (attached to the unit) and this manual describe how to perform the operations mentioned safely and according to tested procedures.



Danger during maintenance and dismantling phases

Danger of electrocution, burns, noise, unauthorized start-up of the unit, and ejection of objects or fluids during the maintenance and dismantling phases of the unit. The *operating instructions* (attached to the unit) and this manual describe how to perform the operations mentioned safely and according to tested procedures.

9 TROUBLESHOOTING

Problem	Serious code	Cause	Solution	Precaution
The unit does not start	F	Electrical wiring incorrect	The electrical connection has to be checked by a technician referring to the wiring diagram contained in the terminal board box	Turn off the power to the electrical system or set up a system that avoids reinsertion
	F	Power supply voltage unsuitable	Check that the power supply voltage, measured at the motor terminals, is within +/- 10% of the rated voltage	Use PPE against the electrical hazards
	G	The impeller is stuck	Call FPZ assistance to repair the unit	
No or insufficient air flow	G	The suction filter is clogged	A specialized operator (see MAN_PIC) has to clean or replace the cartridge	Avoid entering foreign bodies into the unit
	G	Wrong frequency (for units powered through an inverter)	Correct the frequency	Check the rating plate
	G	Profile of the impeller blades modified (due to deposits on the profile)	Call FPZ assistance personnel to check the impeller	
No or insufficient pressure differential	F	Incorrect direction of rotation	The direction of rotation has to be inverted by a specialized operator (see MAN_PIC) switching two of the electrical power supply wires.	Turn off the power to the electrical system or set up a system that avoids reinsertion
	G	Leaks in the plant	Locate the leak and seal	Use proper sealants
Current absorption exceeding the admissible level	F	Electrical wiring incorrect	The electrical connection has to be checked by a technician referring to the wiring diagram contained in the terminal board box	Take off the power to the electrical system or set up a system that avoids reinsertion
	F	Drop in mains supply voltage	The power supply voltage has to be restored by a specialized operator (see MAN_PIC) at the terminals and at the established values.	
	G	The suction filter is clogged	The cartridge has to be cleaned or replaced by a specialized operator (see MAN_PIC)	Avoid entering foreign bodies into the unit.
	G	The unit has accumulated deposits inside	Call FPZ assistance personnel to clean the inside of the unit	Avoid entering foreign bodies into the unit.
	G	The unit is operating at a pressure and/or vacuum that exceeds the admissible level	Adjust the system and/or the regulating valve to lower pressure differentials.	Use appropriate PPE to operate near the unit
High delivery air temperature	G	The suction filter is clogged	Adjust the system and/or the regulating valve to lower pressure differentials.	Use appropriate PPE (surge protectors, gloves) to operate near the unit
	G	The suction filter is clogged	The cartridge has to be cleaned or replaced by a specialized operator (see MAN_PIC)	Avoid entering foreign bodies into the unit.
	G	The unit has accumulated deposits inside	The unit has to be cleaned inside by a specialized operator (see MAN_PIC).	Avoid entering foreign bodies into the unit.
	G	Suction and/or delivery piping obstructed.	Obstructions have to be removed by a specialized operator (see MAN_PIC).	Avoid entering foreign bodies into the unit.
	G	Suction air temperature exceeds 40°C (+104°F)	Use heat exchangers to reduce the suction air temperature	
Abnormal noise	F	The soundproofing material is damaged	Soundproofing cloth has to be replaced by a technician.	Avoid entering foreign bodies into the unit.
	G	The impeller scrapes against the casing. - The unit is operating at a pressure and/or vacuum that exceeds the admissible level	Reduce the pressure differentials in the plant	Use appropriate PPE (surge protectors, gloves) to operate near the unit
	G	- Reduction of assembly tolerances due to internal deposits (dust, impurities in the pipes, process residues, etc.)	The unit has to be cleaned inside by a specialized operator (see MAN_PIC).	Avoid entering foreign bodies into the unit.
	G	Worn bearing	Bearings have to be replaced by a specialized operator (see MAN_PIC).	
	F	Unit's installation position unsuitable	The unit has to be installed by a technician on structures that cannot transmit or amplify noise (tanks, steel plating, etc.)	Use proper anti-vibration and move the units according to local regulations

Abnormal vibrations	G	The impeller is damaged	The impeller has to be replaced by a specialized operator (see MAN_PIC).	
	G	The impeller has accumulated deposits	The unit has to be cleaned inside by a specialized operator (see MAN_PIC).	Avoid entering foreign bodies into the unit
	G	Unit anchored without anti-vibration insulators	The unit has to be anchored with anti-vibration insulators by specialized operator (see MAN_PIC).	Use proper anti-vibration and move the units according to local regulations
	F	Rigid connection to the plant	Flexible hoses between the unit and the piping have to be fitted by a specialized operator (see MAN_PIC).	Carry out the activity only if the unit is disconnected to the power supply.
	G	Bearing on the blower or motor side defective	Bearings have to be replaced by a specialized operator (see MAN_PIC).	

Leaks	G	Defective silencer gaskets	Gaskets have to be checked by a specialized operator (see MAN_PIC), and if necessary have to be replaced.	Avoid entering foreign bodies into the unit.
	G	Defective casing gaskets	Gaskets have to be cleaned by a specialized operator (see MAN_PIC), and if necessary have to be replaced.	Avoid entering foreign bodies into the unit.

Seriousness: F for functional fault and G for serious fault.

10 REFERENCES

Documents quoted:

- Operating Instruction: supplied with the blower
- MAN_PIC: document with pictogram definitions
- Instruction manual of elastic joint
- Instruction manual of electric motor

Norme e direttive:

- Machinery directive 2006/42/EC
- Atex directive 2014/34/EU (Applies to Atex blowers only)
- EN ISO 12100: 2010
- EN 349:1993+A1: 2008
- EN 614-1: 2006+A1: 2009
- EN ISO 3746: 2010
- EN ISO 13857: 2008
- EN 60204-1: 2006
- EN 1127-1: 2011 (Applies to Atex blowers only)
- EN ISO 80079-36: 2016 (Applies to Atex blowers only)
- EN ISO 80079-37: 2016 (Applies to Atex blowers only)
- EN 14986: 2017 (Applies to Atex blowers only)

11 INSTALLATION DIAGRAMS

SCHEMI DI INSALLAZIONE I
INSTALLATION DIAGRAM GB

COMPRESSORE PRESSURE SERVICE	ASPIRATORE VACUUM SERVICE
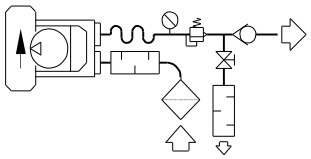	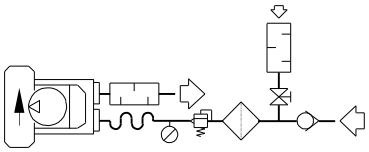
COMPRESSORE IN SERIE SERIAL PRESSURE SERVICE	ASPIRATORE IN PARALLELO PARALLEL VACUUM SERVICE
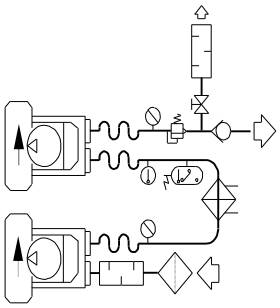	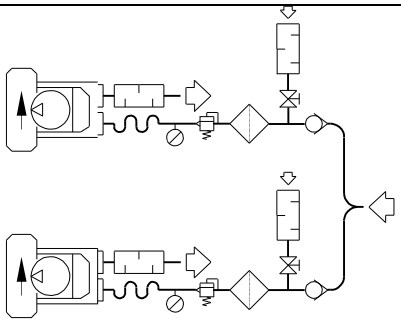
COMPRESSORE IN PARALLELO PARALLEL PRESSURE SERVICE	ATEX BLOWERS SCHEMA D'INSTALLAZIONE INSTALLATION DIAGRAM
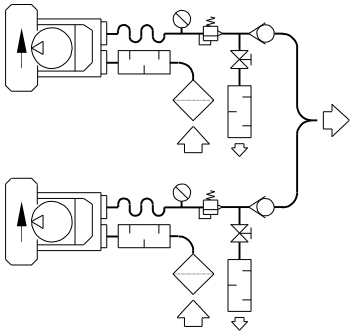	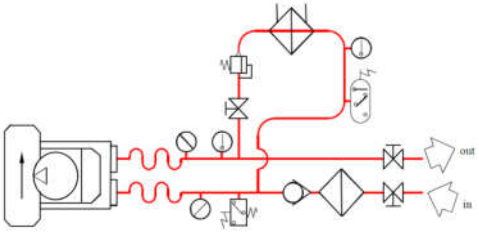

LEGENDA, KEY – ACCESSORIES

Item Item		Denominazione Name	Item Item		Denominazione Name
1		Filtro - Filtro in linea Filter - Inline filter	7		Valvola di ritegno Check valve
(2)		Silenziatore Silencer	8		Valvola Valve
3		Manicotto flessibile Flexible sleeve	(9)		Scambiatore Cooler
4		Manometro – Vuotometro Pressure gauge - Vacuum gauge	(10)		Termometro Thermometer
5		Pressostato – Vuotostato Pressure switch – Vacuum switch	(11)		Termostato Thermostat
6		Valvola limitatrice Pressure relief valve	(x) (x)		SE NECESSARIO IF NECESSARY

SN 1701-9

SAFETY VALVE VRL USE INSTRUCTIONS

CAUTION! THE VALVE IS SUPPLIED NOT CALIBRATED



PLEASE READ CAREFULLY ALL INSTRUCTIONS AND KEEP THEM FOR FUTURE REFERENCE

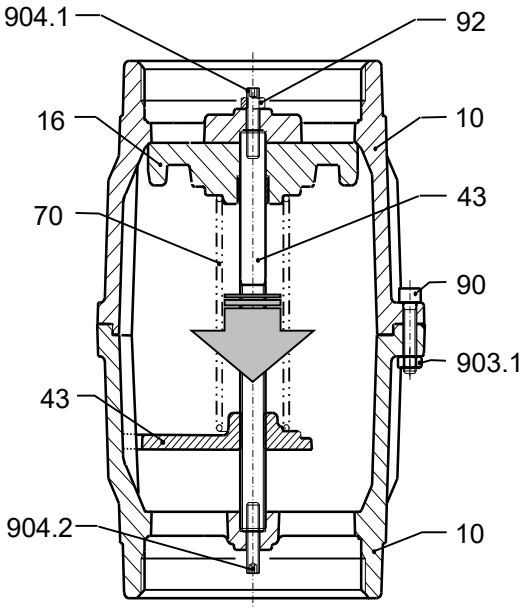

VRL6
Fig. 1a

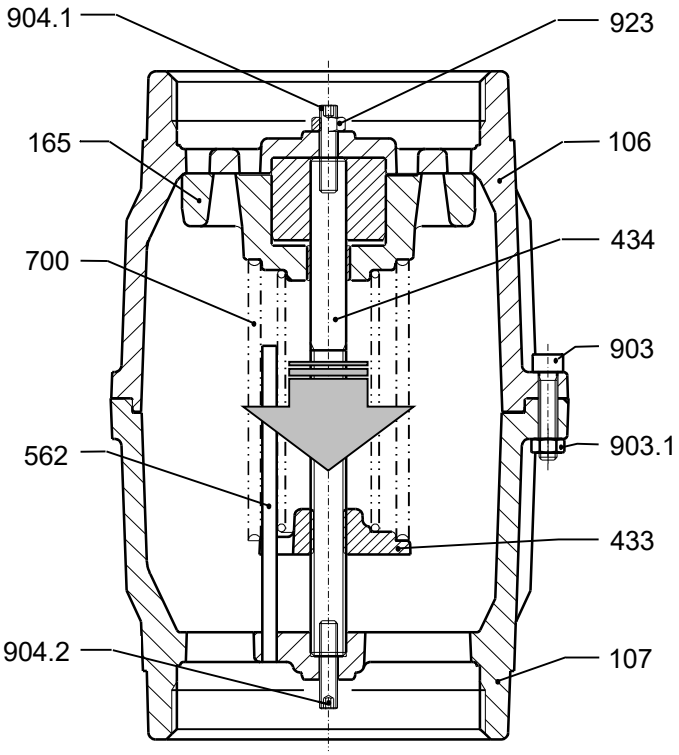

VRL8 - VRL9
Fig. 1b

Description

106	*Housing*	700	*Spring*
107	*Cover*	903	*Screw*
165	*Shutter*	903.1	*Nut*
433	*Spring guide disc*	904.1	*Upper grub screw*
434	*Shutter guide*	904.2	*Lower grub screw*
562	Dowel pin	923	*Nut*

GB CONDITIONS OF USE

- ***THE VRL VALVES ARE DESIGNED FOR THE HANDLING OF AIR OR NON-EXPLOSIVE, NON-HAZARDOUS AND NON-FLAMMABLE GASES IN NON-EXPLOSIVE ENVIRONMENTS. THE GAS INLET TEMPERATURE MUST BE IN THE RANGE OF -15 TO +160 °C.***
- ***RELIEF VALVES ARE DESIGNED AND MANUFACTURED TO LIMIT THE OPERATING PRESSURE IN LOW PRESSURE/VACUUM APPLICATIONS. THEY ARE FOR USE SPECIFICALLY ON LOW PRESSURE BLOWERS AND VACUUM PUMPS ONLY;***
- ***THE VALVE CANNOT WITHSTAND HIGH INTERNAL PRESSURE, DESIGN MAXIMUM OF 2.8 bar A;***
- ***THERE IS SMALL LOSS OF THE AIR/GAS BEING HA***
- ***SOLID PARTICULES, HOWEVER SMALL, INCLUDING DIRT CAN CAUSE SERIOUS DAMAGE; THEREFORE IT IS ESSENTIAL THAT SUCH SUBSTANCES SHOULD BE REMOVED FROM THE GAS BY SUITABLE FILTERS UPSTREAM OF THE INLET.***

SELECTION DIAGRAM

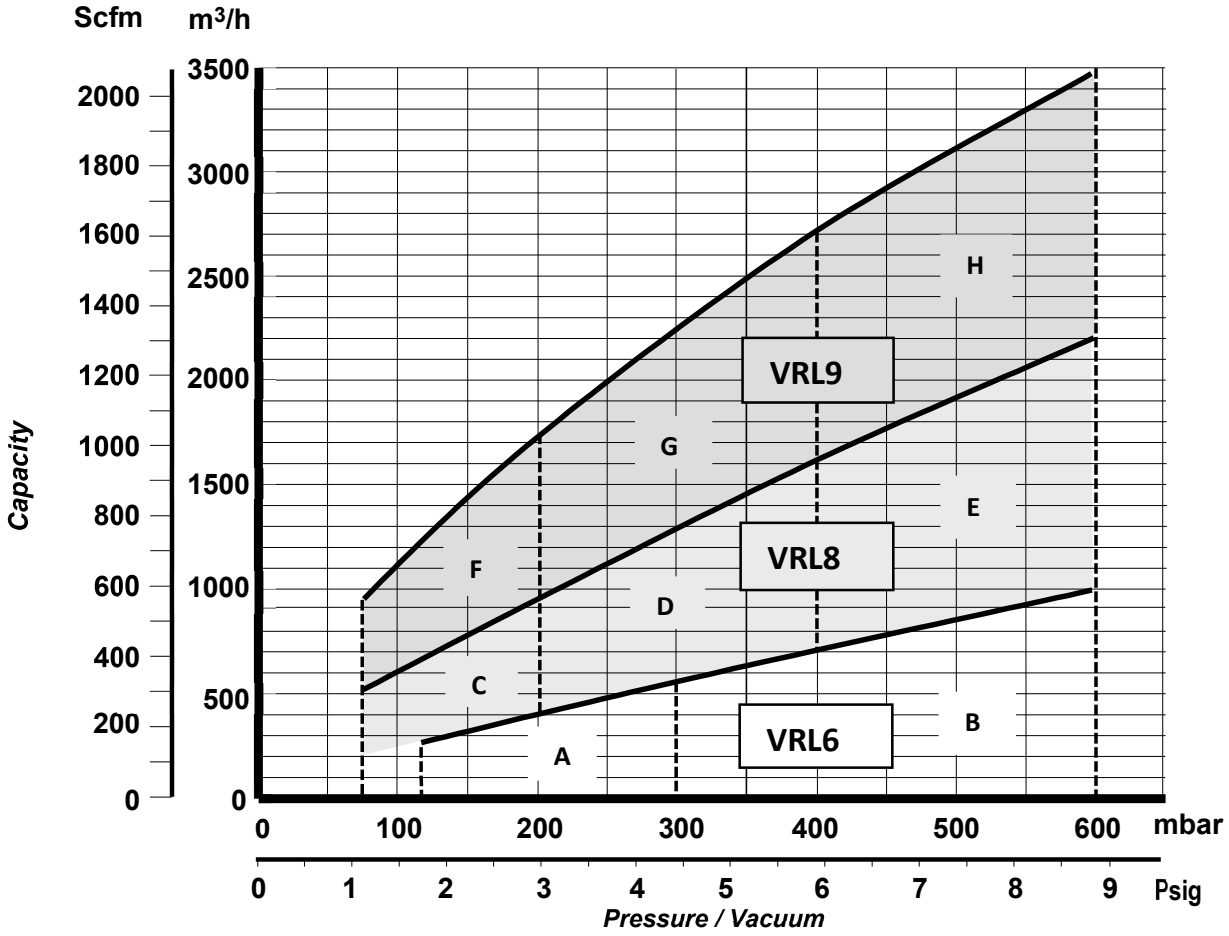

SPRING SELECTION CHART

RANGE	*SPRING* N	*Pressure / Vacuum* MIN [mbar]	[psig]	*Pressure / Vacuum* MAX [mbar]	[psig]	*Colour of identification*
VRL6						
A	I	**120**	**1.763**	**300**	**4.408**	***SILVER***
B	II	**300**	**4.408**	**600**	**8,820**	***GREEN***
VRL8						
C	I	**75**	**1.102**	**200**	**2.940**	***SILVER***
D	II	**200**	**2.940**	**400**	**5.880**	**GREEN**
E	I + II	**400**	**5.880**	**600**	**8,820**	***SILVER & GREEN***
VRL9						
F	I	**75**	**1.102**	**200**	**2.940**	**VERDE - GREEN - VERT - GRÜN - VERDE**
G	II	**200**	**2.940**	**400**	**5.880**	***SILVER***
H	I + II	**400**	**5.880**	**600**	**8,820**	***SILVER & GREEN***

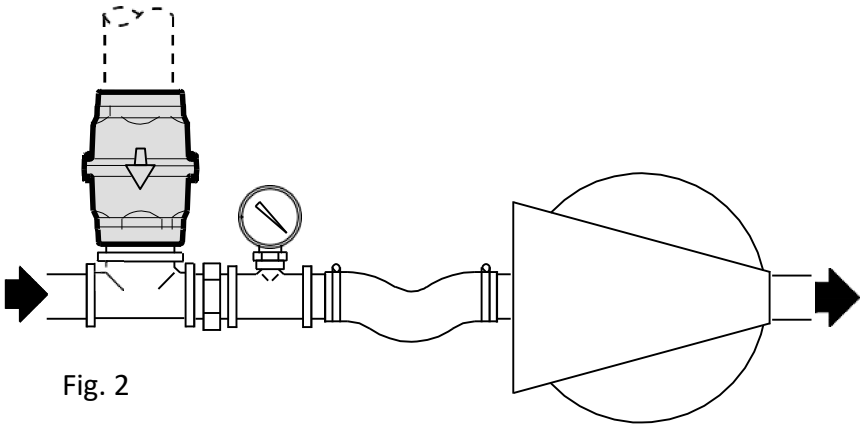

Fig. 2

INSTALLATION SKETCH – VACUUM RELIEF VALVE

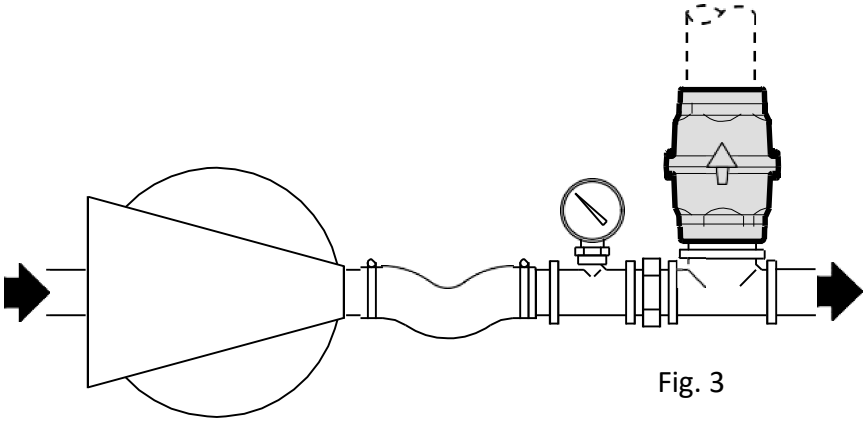

Fig. 3

INSTALLATION SKETCH – PRESSURE RELIEF VALVE

1. CHOICE OF SPRING

The valve is supplied with 2 different springs; each spring is to be used within a specific pressure-vacuum operating range. For the VRL8 and VRL9 there is the possibility to use both springs working in parallel.
Referring to the SELECTION DIAGRAM, check that the valve is correctly sized and depending where the operating point (area A, B,…H) is located, choose one or two springs according to SPRING SELECTION CHART.
The valve is supplied with spring # I installed. If spring needs to be replaced or a supplementary spring is needed to be added (for VRL8 / VRL9), proceed to point # 2 otherwise, adjust valve as per point #3.

2. INSTRUCTIONS FOR SPRING REPLACEMENT (OR MOUNTING ADITIONAL SPRING FOR VRL8 / VRL9)

- Remove the two plastic caps on valve.
- **Ensure stop-nut 923 is locked on the upper housing 106.**
- Unscrew screw 903 from nut 903.1.
- Remove cover 107 from housing 106.
- Unscrew spring guide disc 433 taking it out from shutter guide 434.
- Remove spring 700 (only in case of replacement).
- Install the appropriate spring into shutter 165.
- Compress spring and screw spring guide disc 433 on shutter guide 434 for at least 20 full thread terms
- Check that both ends of the spring are properly positioned within their seats.
- Install the cover 107 on the housing 106 inserting:
  - for VRL6: the sliding guide on the slot in spring guide disc 433
  - for VRL8 and VRL9: dowel pin 562 on the slot in spring guide disc 433.
- Tighten screw 903 on nut 903.1

3. VALVE SETTING

A) Setting-up at allowed vacuum level

- Remove the two plastic caps on valve, if any.
- Position valve on the suction by-pass and connect a vacuum gage as close as possible to the exhauster inlet (Fig. 2).
- Unscrew nut 923.
- Relieve spring tension by backing off upper grub screw 904.1 with the fit key.
- Turn on exhauster. Induce highest attainable vacuum by throttling air intake upstream relief valve (normally reducing throttle to fully-closed).
- Adjust upper grub screw 904.1 until maximum allowable vacuum level is reached.
- Tighten nut 923 keeping blocked upper grub screw 904.1.
- Open suction line.

Double-check vacuum gauge to ensure no additional losses are induced by pipes or filters installed upstream relief valve

B) Setting-up at allowed pressure level

- Remove the two plastic caps on valve, if any.
- Remove nut 923 from upper grub screw 904.1 and place it on to the lower grub screw 904.2. Do not tighten.
- Position valve on the discharge by-pass and connect a pressure gage as close as possible to the blower outlet (Fig. 3).
- Relieve spring tension by backing on lower grub screw 904.2 with the fit key.
- Turn on blower. Induce highest attainable pressure by throttling air discharge downstream of the valve (normally reducing throttle to fully-closed).
- Unscrew lower grub screw 904.2 until maximum allowable pressure level is reached.
- Tighten nut 923 keeping blocked lower grub screw 904.2.
- Open discharge line.

Double-check pressure gauge to ensure no additional losses are induced by pipes or filters installed downstream the valve

Section 3.6.8

Sludge Tank Level Sensor

Configuration summary

Mat. no.	Description Order code	Quantity	Unit
71082058	Waterpilot FMX21 FMX21-CE111HGF15A+PR	1	ST

010	Approval:	CE	CSA C/US IS Cl.I Div.1 Gr.A-D, Ex ia, zone 1
020	Output:	1	4-20mA
045	Probe Tube:	1	316L, d=22mm/0.87in
070	Sensor Range:	1H	1bar/100kPa/15psi gauge, 10mH2O/33ftH2O/400inH2O
080	Reference Accuracy:	G	Standard
090	Calibration; Unit:	F	Sensor range; psi
100	Probe Connection:	15	5 m ..... m cable, shortable, PE
190	Seal:	A	FKM
620	>>Accessory Enclosed:	PR	Cable-mounting-screw NPT1-1/2, 304

Technical Information
Waterpilot FMX21

Hydrostatic level measurement



Compact transmitter for level measurement

Application

The Waterpilot FMX21 is a pressure sensor for hydrostatic level measurement.

Endress+Hauser offers three different versions of the device:
- FMX21 with a stainless steel housing, external diameter of 22 mm (0.87 in): This version is excellently suited to drinking water applications and for use in bore holes and wells with small diameters
- FMX21 with a stainless steel housing, external diameter of 42 mm (1.65 in): Heavy-duty version and easy to clean thanks to flush-mounted process isolating diaphragm, ideally suited to wastewater and wastewater treatment plants
- FMX21 with plastic insulation, external diameter of 29 mm (1.14 in): Robust version for use in salt water and excellently suited to applications on ships (e.g. ballast water tanks)

Your benefits

- High resistance to overload
- High-precision, robust ceramic measuring cell with long-term stability
- Climate proofed sensor thanks to completely potted electronics and 2-filter pressure compensation system
- Simultaneous measurement of level and temperature with optionally integrated Pt100 temperature sensor
- Accuracy
  - Standard reference accuracy ±0.2 %
  - PLATINUM version ±0.1 %
- Automatic density compensation to increase accuracy
- Usage in drinking water: KTW, NSF, ACS
- Approvals: ATEX, FM, CSA
- Marine approvals: GL, ABS, BV, DNV
- Extensive range of accessories provides complete measuring point solutions

Endress+Hauser
People for Process Automation

Table of contents

About this document 4
Document function 4
Symbols used 4
Supplementary documentation 5
Terms and abbreviations 6
Turn down calculation 7

Function and system design 8
Device version 8
Measuring principle 9
Measuring system 10
Level measurement with absolute pressure probe and external pressure signal for FMX21 4 to 20 mA HART 12
Density compensation with the Pt100 temperature sensor for FMX21 4 to 20 mA HART 12
Communication protocol 13
System integration 13

Input 14
Measured variable 14
Measuring range 14
Input signal 15

Output 16
Output signal 16
Signal range 16
Maximum load for FMX21 4 to 20 mA Analog 16
Maximum load for FMX21 4 to 20 mA HART 16
Damping for FMX21 4 to 20 mA HART 17
Protocol-specific data for FMX21 4 to 20 mA HART 18

Power supply 19
Supply voltage 19
Power consumption 19
Current consumption 19
Connecting the device 19
Terminals in the terminal box 23
Probe cable 24
Cable resistance 24
Cable specifications 24
Residual ripple for FMX21 4 to 20 mA Analog 24
Residual ripple for FMX21 4 to 20 mA HART 24

Performance characteristics 25
Reference operating conditions 25
Reference accuracy 25
Resolution 25
Long-term stability 26
Influence of medium temperature 26
Warm-up period 26
Response time 26

Installation 27
Installation instructions 27
Additional installation instructions 27
Cable length 28
Technical data for cable 29
Cable marking 29
Cable shortening kit 30

Environment 31
Ambient temperature range 31
Storage temperature range 31
Degree of protection 31
Electromagnetic compatibility (EMC) 32
Overvoltage protection 32

Process 33
Medium temperature range 33
Medium temperature limit 33
Pressure specifications 34

Mechanical construction 35
Dimensions of the level probe 35
Dimensions of the mounting clamp 36
Dimensions of cable mounting screw 36
Dimensions of terminal box IP66, IP67 with filter 37
Dimensions of the TMT181 temperature head transmitter for FMX21 4 to 20 mA Analog 38
Dimensions of the TMT182 temperature head transmitter for FMX21 4 to 20 mA HART 38
Terminal box with integrated TMT181 temperature head transmitter for FMX21 4 to 20 mA Analog 39
Terminal box with integrated TMT182 temperature head transmitter for FMX21 4 to 20 mA HART 39
Additional weight 40
Testing adapter 40
RIA15 in the field housing 41
HART communication resistor 41
Weight 42
Materials 43

Operability 46
FMX21 4 to 20 mA Analog 46
FMX21 4 to 20 mA HART 46
RIA15 46

Certificates and approvals 47
CE mark 47
RCM-Tick marking 47
Ex approvals 47
EAC conformity 47
Drinking water approval 47
Marine approval 47
Other standards and guidelines 48
Calibration 48
Pressure Equipment Directive 2014/68/EU (PED) 48
Calibration unit 48
Service 49
Downloading the Declaration of Conformity 49

Ordering information 50
Scope of delivery 50
Configuration data sheet 50

Accessories **52**
Service-specific accessories 53

Supplementary documentation **54**
Field of Activities 54
Technical Information 54
Operating Instructions 54
Brief Operating Instructions 54
Safety Instructions (XA) 54
Drinking water approval 54

Registered trademarks **54**
GORE-TEX® 54
TEFLON® 54
HART® 54
FieldCare® 55
DeviceCare® 55
iTEMP® 55

About this document

Document function

The document contains all the technical data on the device and provides an overview of the accessories and other products that can be ordered for the device.

Symbols used

Safety symbols

Symbol	Meaning
DANGER	**DANGER!** This symbol alerts you to a dangerous situation. Failure to avoid this situation will result in serious or fatal injury.
WARNING	**WARNING!** This symbol alerts you to a dangerous situation. Failure to avoid this situation can result in serious or fatal injury.
CAUTION	**CAUTION!** This symbol alerts you to a dangerous situation. Failure to avoid this situation can result in minor or medium injury.
NOTICE	**NOTE!** This symbol contains information on procedures and other facts which do not result in personal injury.

Electrical symbols

Symbol	Meaning	Symbol	Meaning
⎓	Direct current	~	Alternating current
⎓ ~	Direct current and alternating current	⏚	**Ground connection** A grounded terminal which, as far as the operator is concerned, is grounded via a grounding system.
⏚	**Protective ground connection** A terminal which must be connected to ground prior to establishing any other connections.	⏚	**Equipotential connection** A connection that has to be connected to the plant grounding system: This may be a potential equalization line or a star grounding system depending on national or company codes of practice.

Symbols for certain types of information

Symbol	Meaning
✓	**Permitted** Procedures, processes or actions that are permitted.
✓✓	**Preferred** Procedures, processes or actions that are preferred.
✗	**Forbidden** Procedures, processes or actions that are forbidden.
i	**Tip** Indicates additional information.
	Reference to documentation
	Reference to page
	Reference to graphic
	Visual inspection

Symbols in graphics

Symbol	Meaning
1, 2, 3 ...	Item numbers
1., 2., 3. ...	Series of steps
A, B, C, ...	Views
A-A, B-B, C-C, ...	Sections

Supplementary documentation

The document types listed are available:
In the Download Area of the Endress+Hauser Internet site: www.endress.com → Download

Brief Operating Instructions (KA): getting the 1st measured value quickly

FMX21 4 to 20 mA Analog - KA01244P:

FMX21 4 to 20 mA HART - KA01189P:

The Brief Operating Instructions contain all the essential information from incoming acceptance to initial commissioning.

Operating Instructions (BA): your comprehensive reference

FMX21 4 to 20 mA Analog - BA01605P:

FMX21 4 to 20 mA HART - BA00380P:

RIA15 - BA01170K:

These Operating Instructions contain all the information that is required in various phases of the life cycle of the device: from product identification, incoming acceptance and storage, to mounting, connection, operation and commissioning through to troubleshooting, maintenance and disposal.

Safety Instructions (XA)

Depending on the approval, the following Safety Instructions (XA) are supplied with the device. They are an integral part of the Operating Instructions.

Directive	Type of protection	Category	Documentation	Option [1]
ATEX	Ex ia IIC	II 2 G	XA00454P	BD
ATEX	Ex nA IIC	II 3 G	XA00485P	BE
IECEx	Ex ia IIC	n/a	XA00455P	IC
CSA C/US	Ex ia IIC	n/a	ZD00232P (960008976)	CE
FM	AEx ia IIC	n/a	ZD00231P (960008975)	FE
NEPSI	Ex ia IIC	n/a	XA00456P	NA
INMETRO	Ex ia IIC	n/a	XA01066P	MA

1) Product Configurator order code for "Approval"

The nameplate indicates the Safety Instructions (XA) that are relevant to the device.

Terms and abbreviations

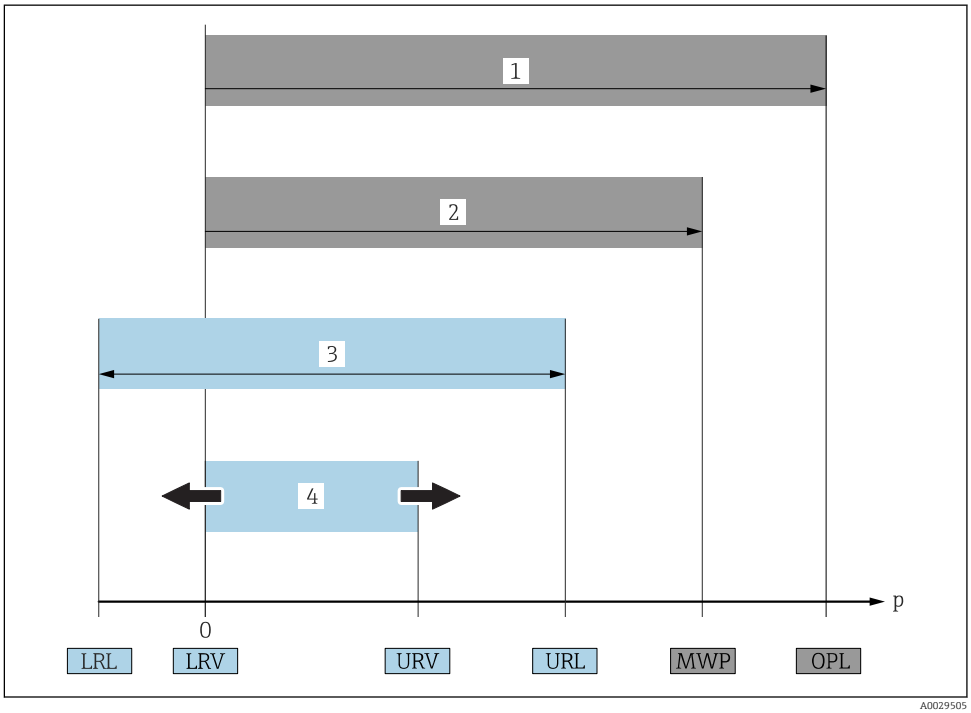

Item	Term/abbreviation	Explanation
1	OPL	The OPL (over pressure limit = sensor overload limit) for the measuring device depends on the lowest-rated element, with regard to pressure, of the selected components, i.e. the process connection has to be taken into consideration in addition to the measuring cell. Also observe pressure-temperature dependency. The OPL may only be applied for a limited period of time.
2	MWP	The MWP (maximum working pressure) for the sensors depends on the lowest-rated element, with regard to pressure, of the selected components, i.e. the process connection has to be taken into consideration in addition to the measuring cell. Also observe pressure-temperature dependency. The MWP may be applied at the device for an unlimited period. The MWP can also be found on the nameplate.
3	Maximum sensor measuring range	Span between LRL and URL This sensor measuring range is equivalent to the maximum calibratable/adjustable span.
4	Calibrated/adjusted span	Span between LRV and URV Factory setting: 0 to URL Other calibrated spans can be ordered as customized spans.
p	-	Pressure
-	LRL	Lower range limit
-	URL	Upper range limit
-	LRV	Lower range value
-	URV	Upper range value
-	TD (turn down)	Turn down Example - see the following section.
-	PE	Polyethylene
-	FEP	Fluorinated ethylene propylene
-	PUR	Polyurethane

Turn down calculation

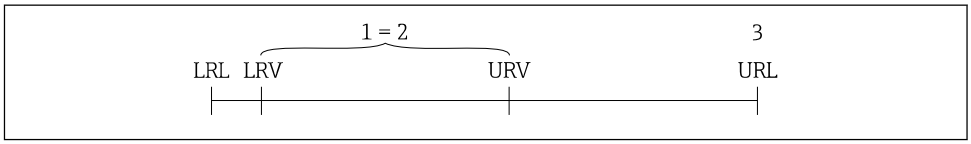

1 Calibrated/adjusted span
2 Zero point-based span (4 to 20 mA Analog: customer-specific span can only be set at the factory when ordered)
3 URL sensor

Example

- Sensor:10 bar (150 psi)
- Upper range value (URL) = 10 bar (150 psi)

Turn down (TD):

$$TD = \frac{URL}{|URV - LRV|}$$

$$TD = \frac{10\ \text{bar (150 psi)}}{|5\ \text{bar (75 psi)} - 0\ \text{bar (0 psi)}|} = 2$$

In this example, the TD is 2:1.
This span is based on the zero point.

- Calibrated/adjusted span: 0 to 5 bar (0 to 75 psi)
- Lower range value (LRV) = 0 bar (0 psi)
- Upper range value (URV) = 5 bar (75 psi)

Function and system design

Device version

Outer diameter	22 mm (0.87 in)	42 mm (1.65 in)	Max. 29 mm (1.14 in)
	 A0018640	 A0018641	 A0018642
Field of application	Hydrostatic level measurement in deep wells e.g. drinking water	Hydrostatic level measurement in wastewater	Hydrostatic level measurement in saltwater
	NOTICE **The Waterpilot is not suitable for use in biogas plants since the gases can diffuse through the elastomers (seals, cable).** ▶ For applications involving biogas, Endress+Hauser offers the Deltapilot level measuring device.		
Process connection	▪ Suspension clamp ▪ Cable mounting screw with G 1½" A or NPT 1½" thread		
Extension cable	PE, PUR, FEP → 🖹 45		
Seals	▪ FKM Viton ▪ EPDM [1]	FKM Viton	▪ FKM Viton ▪ EPDM [1]
Measuring ranges	▪ Relative pressure: 0 to 0.1 bar (0 to 1.5 psi) to 0 to 20 bar (0 to 300 psi) ▪ Absolute pressure: 0 to 2 bar (0 to 30 psi) to 0 to 20 bar (0 to 300 psi)		▪ Relative pressure: 0 to 0.1 bar (0 to 1.5 psi) to 0 to 4 bar (0 to 60 psi) ▪ Absolute pressure: 0 to 2 bar (0 to 30 psi) to 0 to 4 bar (0 to 60 psi)
	▪ Customer-specific measuring ranges; factory-calibrated. ▪ The following output units can be configured: %, mbar, bar, kPa, MPa, mmH_2O, mH_2O, inH_2O, ftH_2O, psi and numerous level units.		
Overload	to 40 bar (600 psi)		to 25 bar (375 psi)
Process temperature range	−10 to +70 °C (+14 to +158 °F)		0 to +50 °C (+32 to +122 °F)
Reference accuracy	▪ ±0.2 % of the set span ▪ Optional: ±0.1 % of set span (PLATINUM version)		
Supply voltage	10.5 to 35 V DC, Ex: 10.5 to 30 V DC		
Output	▪ 4 to 20 mA Analog ▪ 4 to 20 mA HART (can be inverted) with superimposed digital communication protocol HART 6.0, 2-wire		
Options	Drinking water approval	—	
	▪ Wide range of approvals, including ATEX, FM, CSA ▪ Numerous accessories ▪ Integrated Pt100 temperature sensor and TMT181 temperature head transmitter (4 to 20 mA) ▪ Integrated Pt100 temperature sensor and TMT182 temperature head transmitter (4 to 20 mA HART) ▪ Marine approval		
Specialties	▪ High-precision, robust ceramic measuring cell with long-term stability ▪ Automatic density compensation ▪ Customer-specific cable marking		

1) Recommended for drinking water applications, not suitable for use in hazardous areas.

Measuring principle

The ceramic measuring cell is a dry measuring cell i.e. the pressure acts directly on the robust, ceramic process isolating diaphragm of the Waterpilot FMX21. Changes in air pressure are guided via a pressure compensation tube through the extension cable to the rear of the ceramic process isolating diaphragm and are compensated for. A pressure-dependent change in capacitance, caused by the movement of the process isolating diaphragm, is measured at the electrodes of the ceramic carrier. The electronics unit then converts this to a signal that is proportional to the pressure and linear to the level.

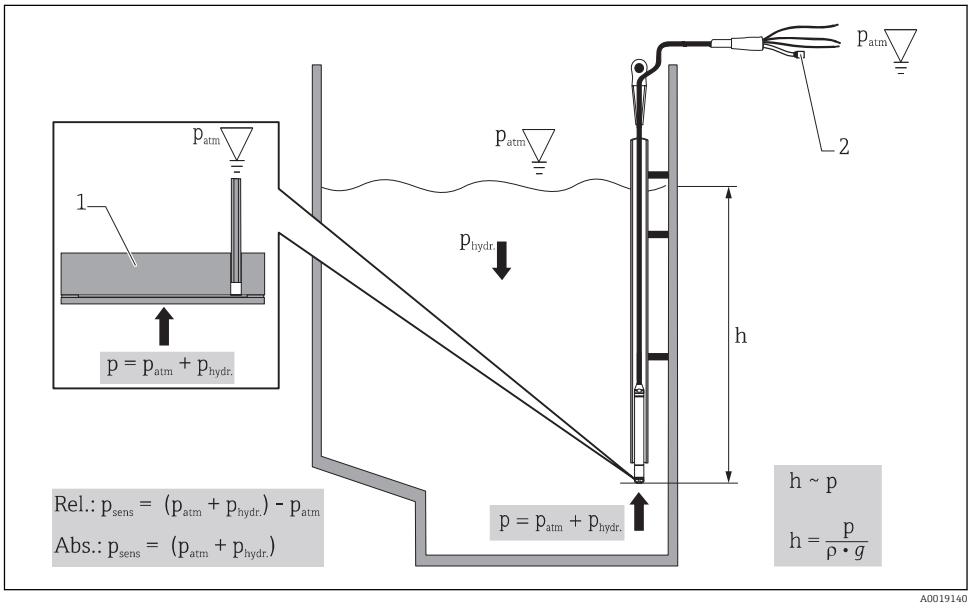

1 Ceramic measuring cell
2 Pressure compensation tube
h Height level
p Total pressure = atmospheric pressure + hydrostatic pressure
ρ Density of the medium
g Acceleration due to gravity
$P_{hydr.}$ Hydrostatic pressure
P_{atm} Atmospheric pressure
P_{sens} Pressure displayed on the sensor

Temperature measurement with optional Pt100 resistance thermometer [1)]

For simultaneous measurement of level and temperature, Endress+Hauser offers the Waterpilot FMX21 with an optional 4-wire Pt100 resistance thermometer → 52. The Pt100 is categorized as Accuracy Class B as per DIN EN 60751.

Temperature measurement with optional Pt100 and TMT181 temperature head transmitter for FMX21 4 to 20 mA Analog [1)]

To convert the temperature signal to an analog, scalable 4 to 20 mA output signal, Endress+Hauser also offers the TMT181 temperature head transmitter.

Ordering information: → 50; "Accessories" → 52. Technical Information TI00070R.

Temperature measurement with optional Pt100 and TMT182 temperature head transmitter for FMX21 4 to 20 mA HART [1)]

Endress+Hauser also offers the TMT182 temperature head transmitter with HART protocol for converting the temperature signal to an analog, scalable 4 to 20 mA output signal superimposed with HART 6.0. See also: "Density compensation with Pt100 temperature sensor" → 12

Ordering information: → 50; "Accessories" → 52. Technical Information TI00078R.

1) Not for use in hazardous areas.

Measuring system

Application examples

As standard, the complete measuring system consists of a Waterpilot FMX21 and a transmitter power supply unit with a supply voltage of 10.5 to 30 V DC (hazardous areas) or 10.5 to 35 V DC (non-hazardous areas).

Possible measuring point solutions with a transmitter and evaluation units from Endress+Hauser:

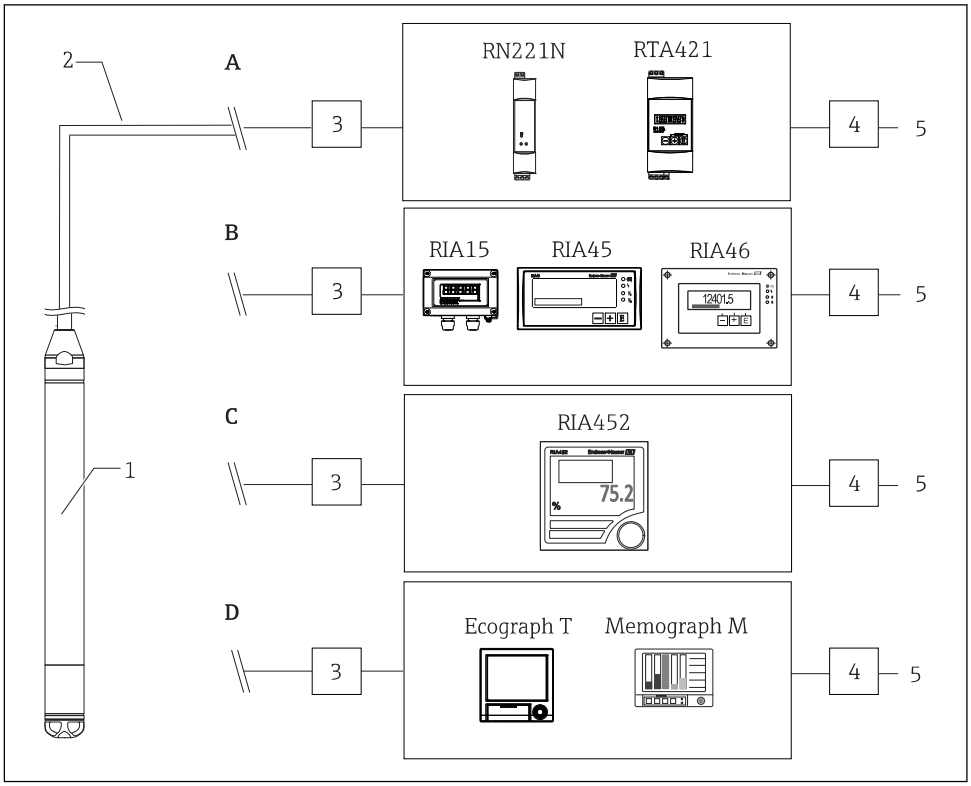

1 Waterpilot FMX21
2 4 to 20 mA or 4 to 20 mA HART
3+4 Overvoltage protection, e.g. HAW from Endress+Hauser (not for use in hazardous areas) HAW562; for DIN rail: HAW562/intrinsically safe HAW562Z. Selection in accordance with supply voltage.
5 Power supply

A: Easy and cost-effective measuring point solution: power supplied to the Waterpilot in hazardous and non-hazardous areas via the RN221N active barrier. Power supply and additional control of two appliances, such as pumps, via the RTA421 limit value switch with local display.

B: The RIA45 evaluation unit (for panel mounting) or the RIA46 evaluation unit (for field installation) offers power supply, local display and two switch outputs. If the RIA15 is used, the basic settings for the FMX21 HART can be made via the display module.

C: If several pumps are used, the pump service life can be prolonged by alternate switching. With alternating pump control, the pump which was out of service for the longest period of time is switched on. The RIA452 evaluation unit (for panel mounting) offers this option in addition to numerous other functions.

D: State-of-the-art recording technology with graphic display recorders from Endress+Hauser, such as Ecograph T, Memograph M for documentation, monitoring, visualization and archiving purposes.

Application examples with the Pt100

As standard, the complete measuring system consists of a Waterpilot FMX21 and a transmitter power supply unit with a supply voltage of 10.5 to 30 V DC (hazardous areas) or 10.5 to 35 V DC (non-hazardous areas).

Possible measuring point solutions with a transmitter and evaluation units from Endress+Hauser:

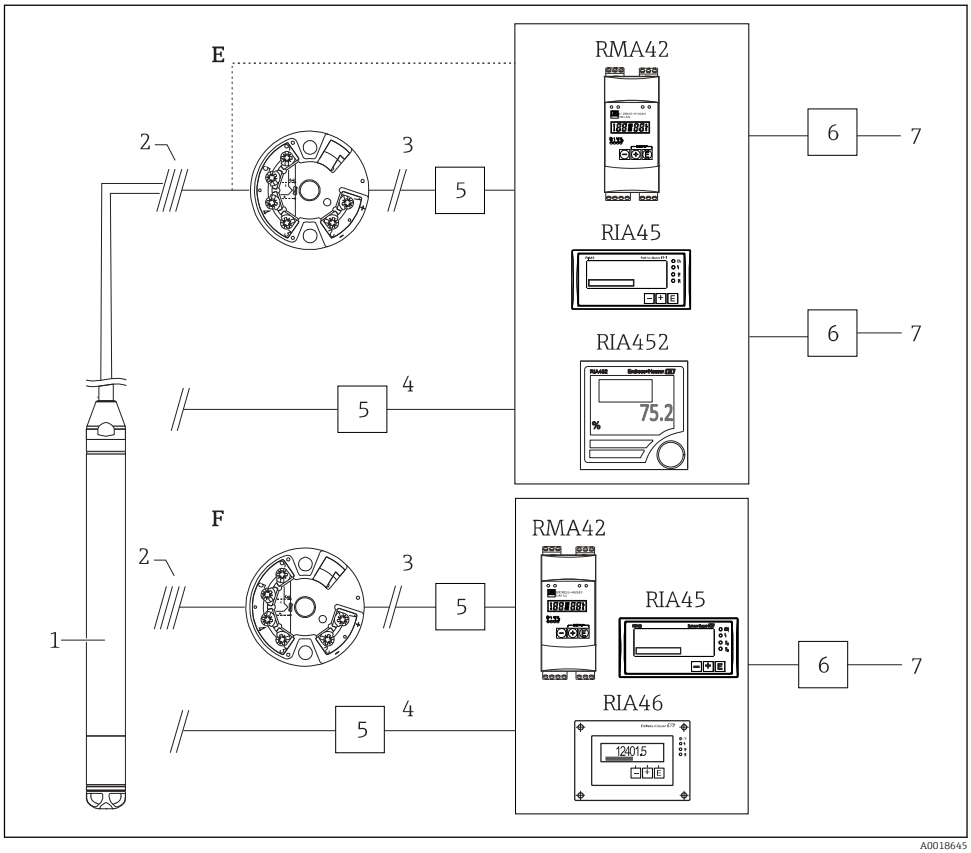

1 *Waterpilot FMX21*
2 *Connection for integrated Pt100 in the FMX21*
3 *Temperature for 4 to 20 mA or 4 to 20 mA HART*
4 *Level for 4 to 20 mA or 4 to 20 mA HART*
5 *Overvoltage protection, e.g. HAW from Endress+Hauser (not for use in hazardous areas) on the sensor side for field installation: HAW569; for DIN rail: HAW562/intrinsically safe HAW562Z. Selection in accordance with supply voltage.*
6 *Overvoltage protection, e.g. HAW from Endress+Hauser (not for use in hazardous areas) on the supply side for DIN rail: HAW561 (115/230 V) and HAW561K (24/48 V AC/DC). Selection in accordance with supply voltage.*
7 *Power supply*

E: If you wish to measure, display and evaluate the temperature as well as the level, e.g. to monitor the temperature in fresh water for the purpose of detecting temperature limits for germ formation, the options available to you include the following: The optionally available TMT182 temperature head transmitter can convert the Pt100 signal to a 4 to 20 mA signal or a 4 to 20 mA HART signal and transfer it to any commonly used evaluation unit. The RMA42, RIA45 and RIA452 evaluation units also offer a direct input for the Pt100 signal.

F: If you wish to record and evaluate the level and temperature measured value with one device, use the RMA42, RIA45 and RIA46 evaluation units with two inputs. It is even possible to mathematically link the input signals with this unit. These evaluation units are HART-compatible.

Level measurement with absolute pressure probe and external pressure signal for FMX21 4 to 20 mA HART

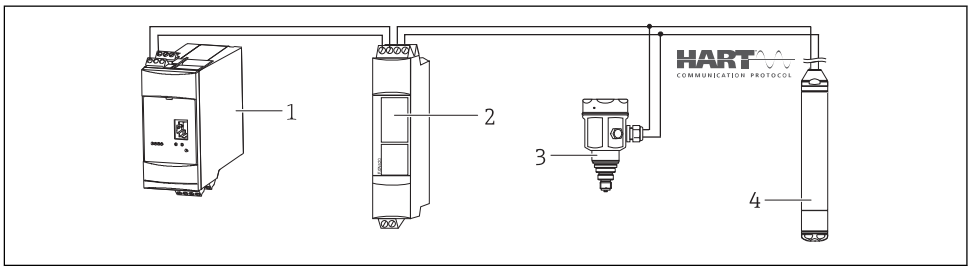

A0018757

1 Fieldgate FXA520
2 Multidrop Connector FXN520
3 Cerabar
4 Waterpilot FMX21 4 to 20 mA HART

It is advisable to use an absolute pressure probe for applications in which condensation can occur. For level measurement using an absolute pressure probe, the measured value is affected by fluctuations in the ambient pressure. To correct the resulting measured error, you can connect an external absolute pressure sensor (e.g. Cerabar) to the HART signal line, switch the Waterpilot to burst mode and operate the Cerabar in the "Electr. Delta P" mode. The external absolute pressure sensor then calculates the difference between the two pressure signals and can thus determine the level precisely. Only one level measured value can be corrected in this way.

If using intrinsically safe devices, the regulations for interconnecting intrinsically safe circuits as stipulated in IEC60079-14 (proof of intrinsic safety) must be observed.

Density compensation with the Pt100 temperature sensor for FMX21 4 to 20 mA HART

The Waterpilot FMX21 4 to 20 mA HART can correct measured errors that result from fluctuations in the density of the water caused by temperature. Users can choose from the following options:

Use the internally measured sensor temperature of the FMX21

The internally measured sensor temperature is calculated in the Waterpilot FMX21 4 to 20 mA HART for density compensation. The level signal is thus corrected according to the density characteristic line of water.

Use the optional internal temperature sensor for density compensation in a suitable HART master (e.g. PLC)

The Waterpilot FMX21 4 to 20 mA HART is optionally available with a Pt100 temperature sensor. To convert the Pt100 signal to a 4 to 20 mA HART signal, Endress+Hauser also offers the TMT182 temperature head transmitter.

The temperature and pressure signals are queried by a HART master (e.g. PLC), where a corrected level value can be generated using a stored linearization table or density function (of a chosen medium).

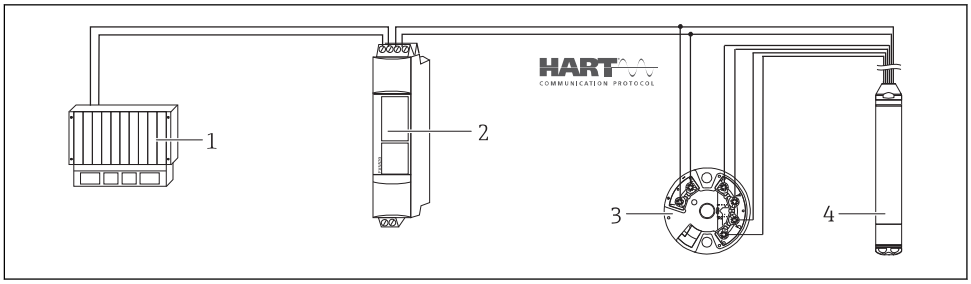

A0018763

1 HART master, e.g. PLC (programmable logic controller)
2 FXN520 Multidrop Connector
3 TMT182 temperature head transmitter
4 Waterpilot FMX21 4 to 20 mA HART

Use an external temperature signal, which is transmitted to the FMX21 4 to 20 mA HART via the HART burst mode

The Waterpilot FMX21 4 to 20 mA HART is optionally available with a Pt100 temperature sensor. With this option, the signal of the Pt100 is evaluated with a HART-compliant temperature transmitter (min. HART 5.0) that supports the BURST mode. The temperature signal can thus be transmitted to the FMX21 4 to 20 mA HART. The FMX21 4 to 20 mA HART uses this signal for density correction of the level signal.

The TMT182 temperature head transmitter is not suitable for this configuration.

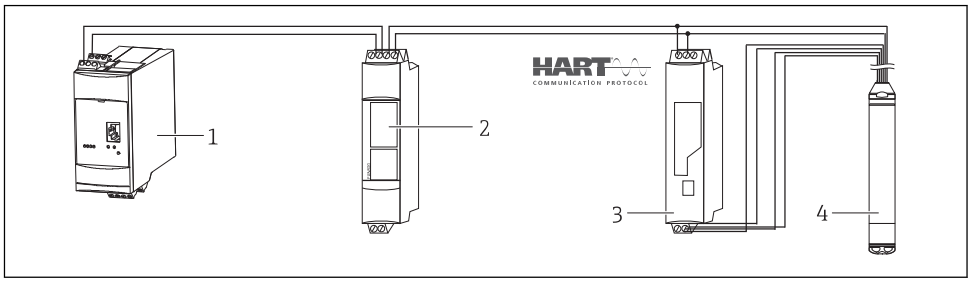

A0018764

1 Fieldgate FXA520
2 Multidrop Connector FXN520
3 HART-compatible temperature transmitter (e.g. TMT82)
4 Waterpilot FMX21 4 to 20 mA HART

Without additional compensation due to the anomaly of water, errors of up to 4% may occur at a temperature of 70 °C (158 °F), for example. With density compensation, this error can be decreased to 0.5 % in the entire temperature range from 0 to +70 °C (+32 to +158 °F).

More information can be found in the Technical Information:

- TI01010T: TMT82 temperature transmitter (4 to 20 mA HART)
- TI00369F: Fieldgate FXA520
- TI00400F: Multidrop Connector FXN520

Communication protocol

- 4 to 20 mA Analog
  Ordering information: Product Configurator order code for "Output", option "1"
- 4...20 mA HART
  Ordering information: Product Configurator order code for "Output", option "2"

System integration

The device can be given a tag name.

Ordering information: Product Configurator order code for "Identification", option "Z1"

Input

Measured variable

FMX21 + Pt100 (optional)

- Hydrostatic pressure of a liquid
- Pt100: Temperature

TMT181 temperature head transmitter (optional) for FMX21 4 to 20 mA Analog

Temperature

TMT182 temperature head transmitter (optional) for FMX21 4 to 20 mA HART

Temperature

Measuring range

- Customer-specific measuring ranges or calibration that has been preset in the factory
- Temperature measurement of −10 to +70 °C (+14 to +158 °F) with Pt100 (optional)

Relative pressure

Sensor measuring range [bar (psi)]	Lowest calibratable span [1] [bar (psi)]	Vacuum resistance [bar_{abs} (psi_{abs})]	Option [2]
0.1 (1.5)	0.01 (0.15)	0.3 (4.5)	1C
0.2 (3.0)	0.02 (0.3)	0.3 (4.5)	1D
0.4 (6.0)	0.04 (1.0)	0	1F
0.6 (9.0)	0.06 (1.0)	0	1G
1.0 (15.0)	0.1 (1.5)	0	1H
2.0 (30.0)	0.2 (3.0)	0	1K
4.0 (60.0)	0.4 (6.0)	0	1M
10.0 (150) [3]	1.0 (15)	0	1P
20.0 (300) [3]	2.0 (30)	0	1Q

1) Largest turn down that can be configured at the factory: 10:1, higher turn down can be configured on request or in the device (for FMX21 4 to 20 mA HART).
2) Product Configurator order code for "Sensor range"
3) These measuring ranges are not available for the special version with plastic insulation, external diameter of 29 mm (1.14 in).

Absolute pressure

Sensor measuring range [bar (psi)]	Lowest calibratable span [1] [bar (psi)]	Vacuum resistance [bar_{abs} (psi_{abs})]	Option [2]
2.0 (30.0)	0.2 (3.0)	0	2K
4.0 (60.0)	0.4 (6.0)	0	2M
10.0 (150) [3]	1.0 (15)	0	2P
20.0 (300) [3]	2.0 (30)	0	2Q

1) Largest turn down that can be configured at the factory: 10:1, higher turn down can be configured on request or in the device (for FMX21 4 to 20 mA HART).
2) Product Configurator order code for "Sensor range"
3) These measuring ranges are not available for the special version with plastic insulation, external diameter of 29 mm (1.14 in).

Input signal

FMX21 + Pt100 (optional)

- Change in capacitance
- Pt100: Change in resistance

TMT181 temperature head transmitter (optional) for FMX21 4 to 20 mA Analog

Pt100 resistance signal, 4 wire

TMT182 temperature head transmitter (optional) for FMX21 4 to 20 mA HART

Pt100 resistance signal, 4 wire

Output

Output signal

FMX21 + Pt100 (optional)

- 4 to 20 mA Analog, 2-wire for hydrostatic pressure measured value.
  Ordering information: Product Configurator order code for "Output", option "1"
- 4 to 20 mA HART with superimposed digital communication protocol HART 6.0, 2-wire for hydrostatic pressure measured value.
  Ordering information: Product Configurator order code for "Output", option "2"
  Options:
  – Max. alarm (factory setting 22mA): can be set from 21 to 23 mA
  – Hold measured value: last measured value is held
  – Min. alarm: 3.6 mA
- Pt100: temperature-dependent resistance value

TMT181 temperature head transmitter (optional) for FMX21 4 to 20 mA Analog

4 to 20 mA Analog for temperature measured value, 2-wire

TMT182 temperature head transmitter (optional) for FMX21 4 to 20 mA HART

4 to 20 mA HART with superimposed digital communication protocol HART 5.0 for temperature measured value, 2-wire

Signal range

3.8 mA to 20.5 mA

Maximum load for FMX21 4 to 20 mA Analog

The maximum load resistance depends on the supply voltage (U) and must be determined individually for each current loop, see formula and diagrams for FMX21 and temperature head transmitter. The total resistance resulting from the resistances of the connected devices, the connecting cable and, where applicable, the resistance of the extension cable may not exceed the load resistance value.

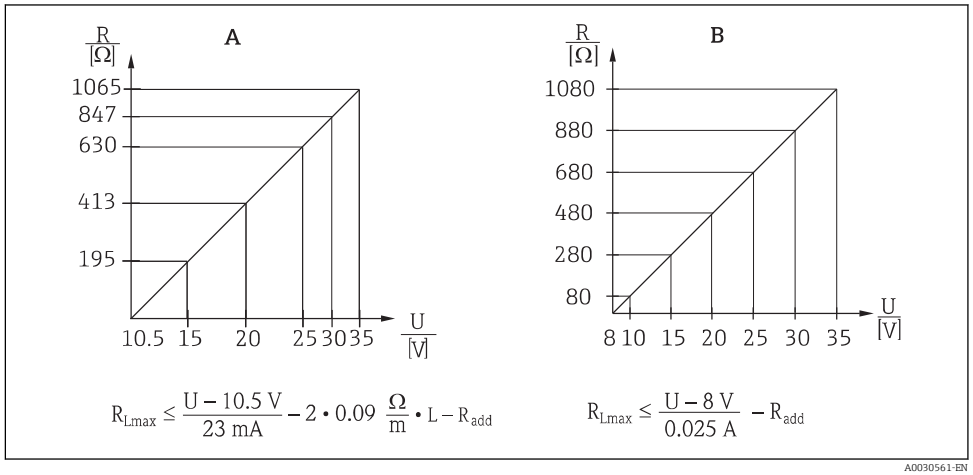

A FMX21 4 to 20 mA Analog load chart for estimating the load resistance. Additional resistances, such as the resistance of the extension cable, have to be subtracted from the value calculated as shown in the equation.

B Load diagram for TMT181 temperature head transmitter for estimating the load resistance. Additional resistances must be subtracted from the value calculated as shown in the equation

R_{Lmax} *Max. load resistance [Ω]*

R_{add} *Additional resistances such as resistance of evaluating device and/or display unit, cable resistance [Ω]*

U Supply voltage [V]

L Basic length of extension cable [m] (cable resistance per wire 0.09 Ω/m)

When using the measuring device in hazardous areas, installation must comply with the corresponding national standards and regulations and the Safety Instructions or Installation or Control Drawings (XA).

Maximum load for FMX21 4 to 20 mA HART

The maximum load resistance depends on the supply voltage (U) and must be determined individually for each current loop, see formula and diagrams for FMX21 and temperature head

transmitter. The total resistance resulting from the resistances of the connected devices, the connecting cable and, where applicable, the resistance of the extension cable may not exceed the load resistance value.

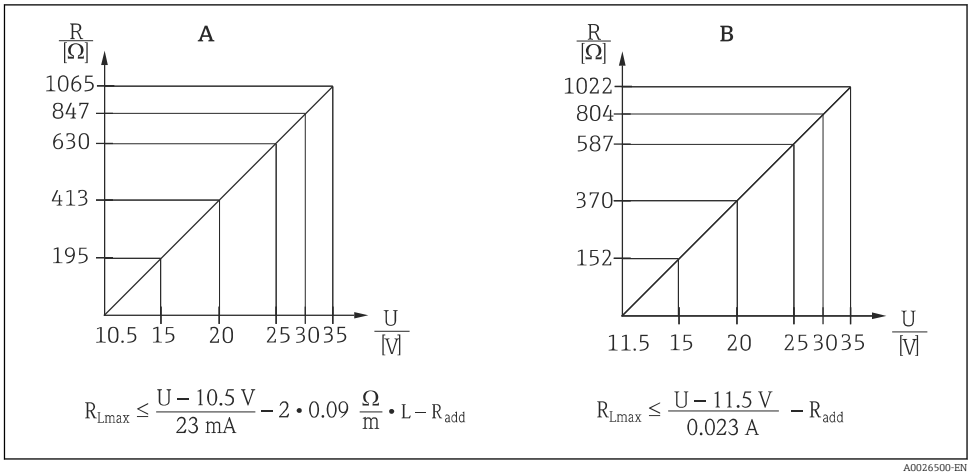

A FMX21 4 to 20 mA HART load chart for estimating the load resistance. Additional resistances, such as the resistance of the extension cable, have to be subtracted from the value calculated as shown in the equation.

B Load diagram for TMT182 temperature head transmitter for estimating the load resistance. Additional resistances must be subtracted from the value calculated as shown in the equation

R_{Lmax} Max. load resistance [Ω]

R_{add} Additional resistances such as resistance of evaluating device and/or display unit, cable resistance [Ω]

U Supply voltage [V]

L Basic length of extension cable [m] (cable resistance per wire 0.09 Ω/m)

- When using the measuring device in hazardous areas, installation must comply with the corresponding national standards and regulations and the Safety Instructions or Installation or Control Drawings (XA).
- When operating via a handheld terminal or via a PC with an operating program, a minimum communication resistance of 250 Ω must be taken into account.

Damping for FMX21 4 to 20 mA HART

- Via HART handheld device or PC with operating program: continuous from 0 to 999 s
- Factory setting: 2 s

Protocol-specific data for FMX21 4 to 20 mA HART

Manufacturer ID	17 (11 hex)
Device type code	25 (19 hex)
Device revision	01 (01 hex) - SW version 01.00.zz
HART specification	6
DD revision	01
Device description files (DTM, DD)	Information and files under: ▪ www.endress.com ▪ www.fieldcommgroup.org
HART load	Min. 250 Ω
HART device variables	The dynamic variables SV, TV and QV may be assigned to any device variable: **Standard process values for SV, TV (second and third device variable) are dependent on the measuring mode:** ▪ Pressure ▪ Level **Standard process value for QV (fourth device variable) is the sensor temperature:** Temperature **Measured values for PV (first device variable) are dependent on the measuring mode:** ▪ Pressure ▪ Level ▪ Tank content
Supported functions	▪ Burst mode ▪ Additional transmitter status ▪ Device locking ▪ Alternative measuring modes ▪ Catch variable ▪ Long tag

Power supply

WARNING

Electrical safety is compromised by an incorrect connection!

- When using the measuring device in a hazardous area, the relevant national standards and guidelines as well as the Safety Instructions (XAs) or installation or control drawings (ZDs) must be adhered to. All data relating to explosion protection can be found in separate documentation which is available on request. This documentation is supplied with the devices as standard → 5

Supply voltage

FMX21 + Pt100 (optional)

- 10.5 to 35 V (not hazardous areas)
- 10.5 to 30 V (hazardous areas)

TMT181 temperature head transmitter (optional) for FMX21 4 to 20 mA Analog

8 to 35 V DC

TMT182 temperature head transmitter (optional) for FMX21 4 to 20 mA HART

11.5 to 35 V DC

Power consumption

FMX21 + Pt100 (optional)

- ≤ 0.805 W at 35 V DC (non-hazardous area)
- ≤ 0.690 W at 30 V DC (hazardous area)

TMT181 temperature head transmitter (optional) for FMX21 4 to 20 mA Analog

≤ 0.875 W at 35 V DC

TMT182 temperature head transmitter (optional) for FMX21 4 to 20 mA HART

≤ 0.805 W at 35 V DC

Current consumption

FMX21 + Pt100 (optional)

Max. current consumption: ≤ 23 mA
Min. current consumption: ≥ 3.6 mA

TMT181 temperature head transmitter (optional) for FMX21 4 to 20 mA Analog

- Max. current consumption: ≤ 25 mA
- Min. current consumption: ≥ 3.5 mA

TMT182 temperature head transmitter (optional) for FMX21 4 to 20 mA HART

- Max. current consumption: ≤ 23 mA
- Min. current consumption: ≥ 3.5 mA

Connecting the device

- Waterpilot
  Reverse polarity protection is integrated in the Waterpilot FMX21 and the temperature head transmitter. Changing the polarities will not result in damage to the devices.
- The cable must end in a dry room or a suitable terminal box. The terminal box (IP66/IP67) with GORE-TEX® filter from Endress+Hauser is suitable for outdoor installation. The terminal box may be ordered as an accessory using the order code for the FMX21, Product Configurator order code for "Accessories enclosed", option "PS".

The electrical connection is established with the corresponding wires of the probe cable and with the optional use of the terminal box → 37 and a power supply (e.g. RN221N active barrier → 10).

Waterpilot with Pt100

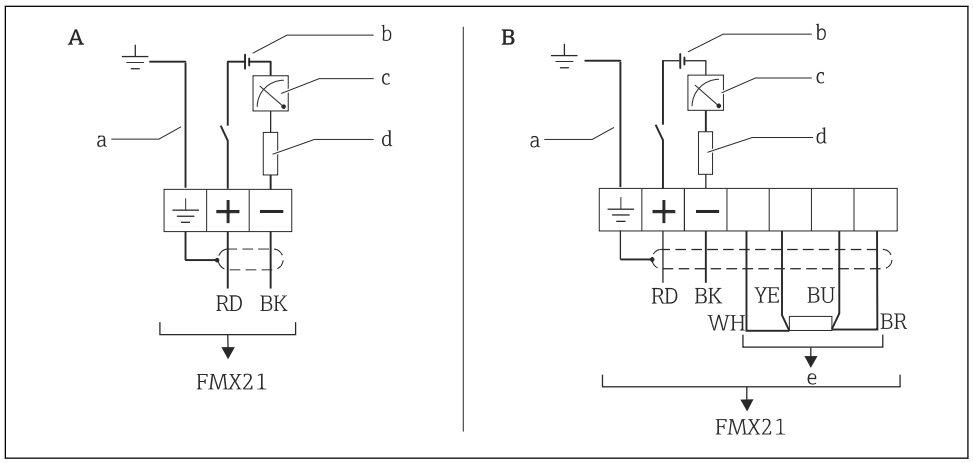

A Waterpilot FMX21
B Waterpilot FMX21 with Pt100 (not for use in hazardous areas); option "NB", Product Configurator order code for "Accessories"
a Not for the FMX21 with external diameter of 29 mm (1.14 in)
b 10.5 to 30 V DC (hazardous area), 10.5 to 35 V DC
c 4...20 mA
d Resistance (R_L)
e Pt100

Waterpilot with Pt100 and TMT181 temperature head transmitter for FMX21 4 to 20 mA Analog

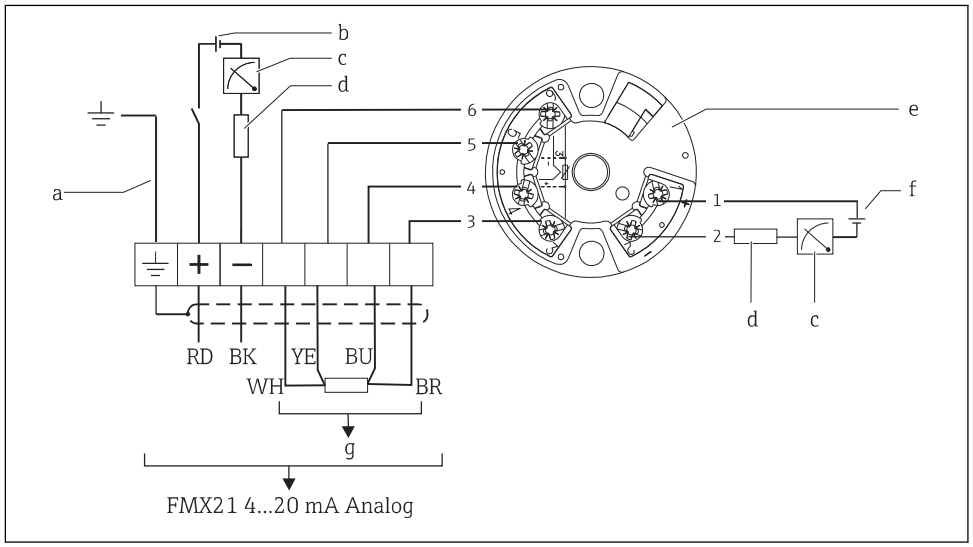

a Not for the FMX21 with external diameter of 29 mm (1.14 in)
b 10.5 to 35 V DC
c 4...20 mA
d Resistance (R_L)
e TMT181 temperature head transmitter (4 to 20 mA) (not for use in hazardous areas)
f 8 to 35 V DC
g Pt100
1...6 Pin assignment

Ordering information:

Pt100: Product Configurator order code for "Accessories mounted", option "NB"

TMT181: Product Configurator order code for "Accessories enclosed", option "PX"

Waterpilot with Pt100 and TMT182 temperature head transmitter for FMX21 4 to 20 mA HART

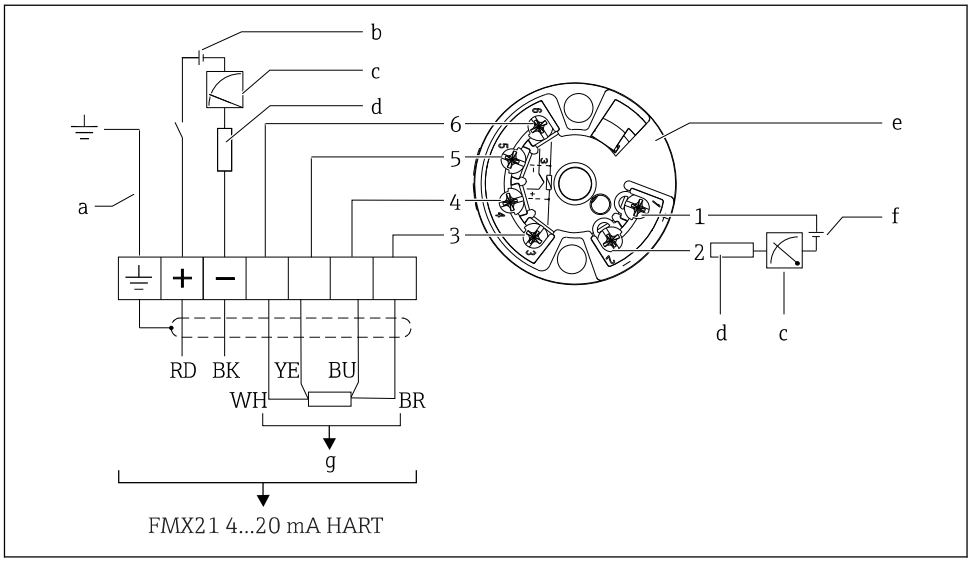

a Not for the FMX21 with external diameter of 29 mm (1.14 in)
b 10.5 to 35 V DC
c 4...20 mA
d Resistance (R_L)
e TMT182 temperature head transmitter (4 to 20 mA) (not for use in hazardous areas)
f 11.5 to 35 V DC
g Pt100
1...6 Pin assignment

Ordering information:

Pt100: Product Configurator order code for "Accessories mounted", option "NB"

TMT182: Product Configurator order code for "Accessories enclosed", option "PT"

Waterpilot FMX21 with RIA15

The RIA15 remote display can be ordered together with the device.

Product structure, feature 620 "Accessory enclosed":
- Option R4 "Remote display RIA15 non-hazardous area, field housing"
- Option R5 "Remote display RIA15 Ex= explosion protection approval, field housing"

Compensation of the atmospheric pressure must be ensured for the installation. A black, vented cable gland is supplied for this purpose.

The RIA15 process display unit is loop-powered and does not require any external power supply.

The voltage drop to be taken into account is:
- ≤1 V in the standard version with 4 to 20 mA communication
- ≤1.9 V with HART communication
- and an additional 2.9 V if display light is used

	Circuit diagram / Description
Waterpilot FMX21 connection, HART communication and RIA15 **without** backlight	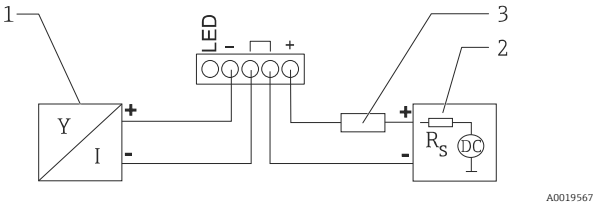 *1 Waterpilot FMX21 block diagram, HART with RIA15 process display unit without light* *1 Waterpilot FMX21* *2 Power supply* *3 HART resistance*
Waterpilot FMX21 connection, HART communication and RIA15 **with** backlight	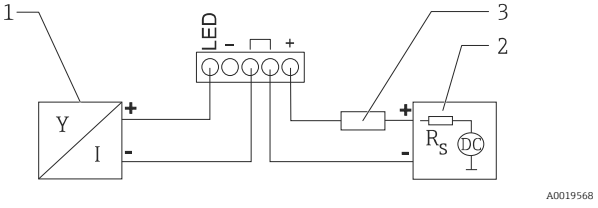 *2 Waterpilot FMX21 block diagram, HART with RIA15 process display unit with light* *1 Waterpilot FMX21* *2 Power supply* *3 HART resistance*

Waterpilot FMX21, RIA15 with installed HART communication resistor module

The HART communication module for installation in the RIA15 can be ordered together with the device.

Product structure, feature 620 "Accessory enclosed":
- Option R6 "HART communication resistor hazardous / non-hazardous area"
- The **voltage drop** to be taken into account is max. **7 V**

Compensation of the atmospheric pressure must be ensured for the installation. A black, vented cable gland is supplied for this purpose.

	Circuit diagram / Description
Waterpilot FMX21 connection and RIA15 **without** backlight	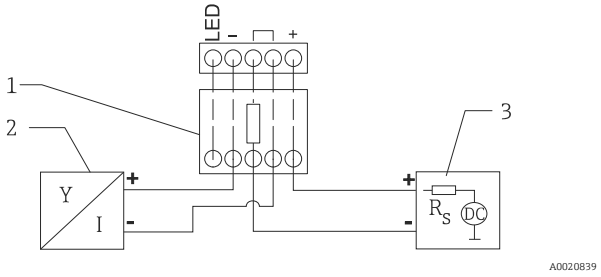 3 *Waterpilot FMX21 block diagram, RIA15 without light, HART communication resistor module* *1 HART communication resistor module* *2 Waterpilot FMX21* *3 Power supply*
Waterpilot FMX21 connection and RIA15 **with** backlight	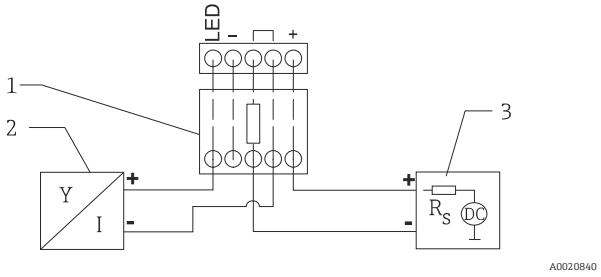 4 *Waterpilot FMX21 block diagram, RIA15 with light, HART communication resistor module* *1 HART communication resistor module* *2 Waterpilot FMX21* *3 Power supply*

Wire colors

RD = red, BK = black, WH = white, YE = yellow, BU = blue, BR = brown

Connection data

Connection classification as per IEC 61010-1:
- Overvoltage category 1
- Pollution level 1

Connection data in the hazardous area

See relevant XA.

Terminals in the terminal box

- Three terminals as standard in the terminal box (terminal box can optionally be ordered as an enclosed accessory → 52)
- 4-terminal strip can be ordered as an accessory, order number: 52008938 cable cross-section 0.08 to 2.5 mm^2 (28 to 14 AWG)

The 4-terminal strip is not designed for use in hazardous areas incl. CSA GP.

Probe cable

- Overall external diameter: 8 mm (0.31 in) ±0.25 mm (0.01 in)
- Pressure compensation tube with Teflon filter: External diameter of 2.5 mm (0.1 in), internal diameter of 1.5 mm (0.06 in)

Cross-section

- FMX21: 3 x 0.2 mm^2 (3 x 26 AWG) + pressure compensation tube with Teflon filter
- FMX21 with Pt100 (optional): 7 x 0.2 mm^2 (7 x 26 AWG) + pressure compensation tube with Teflon filter

Cable resistance

per wire: ≤ 0.09 Ω/m

Cable specifications

Endress+Hauser recommends using shielded, twisted-pair two-wire cables.

The probe cables are shielded for device versions with outer diameters of 22 mm (0.87 in) and 42 mm (1.65 in).

FMX21 + Pt100 (optional)

- Commercially available instrument cable
- Terminals, terminal box: 0.08 to 2.5 mm^2 (28 to 14 AWG)

TMT181 temperature head transmitter (optional) for FMX21 4 to 20 mA Analog

- Commercially available instrument cable
- Terminals, terminal box: 0.08 to 2.5 mm^2 (28 to 14 AWG)
- Transmitter connection: max. 1.75 mm^2 (15 AWG)

TMT182 temperature head transmitter (optional) for FMX21 4 to 20 mA HART

- Commercially available instrument cable
- Terminals, terminal box: 0.08 to 2.5 mm^2 (28 to 14 AWG)
- Transmitter connection: max. 1.75 mm^2 (15 AWG)

Residual ripple for FMX21 4 to 20 mA Analog

FMX21 + Pt100 (optional)

No impact on the 4 to 20 mA signal up to ±5 % residual ripple within the permitted voltage range.

TMT181 temperature head transmitter (optional)

$U_{ss} \geq 5$ V at $U \geq 13$ V, $f_{max.} = 1$ kHz

Residual ripple for FMX21 4 to 20 mA HART

FMX21 + Pt100 (optional)

No impact on the 4 to 20 mA signal up to ±5 % residual ripple within the permitted voltage range (according to HART Hardware Specification HCF_SPEC-54 (DIN IEC 60381-1)).

TMT182 temperature head transmitter (optional)

$U_{ss} \geq 3$ V at $U \geq 13$ V, $f_{max.} = 1$ kHz

Performance characteristics

Reference operating conditions

FMX21 + Pt100 (optional)

- As per IEC 60770
- Ambient temperature T_U = constant, in the range of +21 to +33 °C (+70 to +91 °F)
- Humidity φ = constant, in the range of 20 to 80 % rH
- Ambient pressure p_U = constant, in the range of 860 to 1060 mbar (12.47 to 15.37 psi)
- Position of measuring cell constant, vertical in the range of ±1°
- Input of LOW SENSOR TRIM and HIGH SENSOR TRIM for lower range value and upper range value (only for HART)
- Supply voltage constant: 21 V DC to 27 V DC
- Load with HART: 250 Ω
- Pt100: DIN EN 60770, T_U = +25 °C (+77 °F)

TMT181 temperature head transmitter (optional) for FMX21 4 to 20 mA Analog

Calibration temperature +23 °C (+73 °F) ±5 K

TMT182 temperature head transmitter (optional) for FMX21 4 to 20 mA HART

Calibration temperature +25 °C (+77 °F) ±5 K

Reference accuracy

FMX21 + Pt100 (optional)

The reference accuracy comprises the non-linearity after limit point configuration, hysteresis and non-reproducibility in accordance IEC 60770.

Standard version [2]:
Setting ±0.2 %
– to TD 5:1: < 0.2 % of set span
– from TD 5:1 to TD 20:1 ±(0.02 x TD+0.1)

Platinum version [3]:
- Setting ±0.1 % (optional)
  – to TD 5:1: < 0.1 % of set span
  – from TD 5:1 to TD 20:1 ±(0.02 x TD)
- Class B as per DIN EN 60751
  Pt100: max. ±1 K

TMT181 temperature head transmitter (optional) for FMX21 4 to 20 mA Analog

- ±0.2 K
- With Pt100: max. ±0.9 K

TMT182 temperature head transmitter (optional) for FMX21 4 to 20 mA HART

- ±0.2 K
- With Pt100: max. ±0.9 K

Resolution

Current output: 1 µA

Reading cycle

HART commands: on average 2 to 3 per second

2) Ordering information: Product Configurator order code for "Reference accuracy", option "G"
3) Ordering information: Product Configurator order code for "Reference accuracy", option "D"

Long-term stability

FMX21 + Pt100 (optional)

- ≤ 0.1 % of URL/year
- ≤ 0.25 % of URL/5 years

TMT181 temperature head transmitter (optional) for FMX21 4 to 20 mA Analog

≤ 0.1 K per year

TMT182 temperature head transmitter (optional) for FMX21 4 to 20 mA HART

≤ 0.1 K per year

Influence of medium temperature

- Thermal change in the zero output and the output span:
  0 to +30 °C (+32 to +86 °F): < (0.15 + 0.15 x TD)% of set span
  −10 to +70 °C (+14 to +158 °F): < (0.4 + 0.4 x TD)% of set span
- Temperature coefficient (T_K) of the zero output and the output span
  −10 to +70 °C (+14 to +158 °F): 0.1 % / 10 K of URL

Warm-up period

FMX21 + Pt100 (optional)

- FMX21: < 6 s
- Pt100: 300 s

TMT181 temperature head transmitter (optional) for FMX21 4 to 20 mA Analog

4 s

TMT182 temperature head transmitter (optional) for FMX21 4 to 20 mA HART

4 s

Response time

FMX21 + Pt100 (optional)

- FMX21: 400 ms (T90 time), 500 ms (T99 time)
- Pt100: 160 s (T90 time), 300 s (T99 time)

Installation

Installation instructions

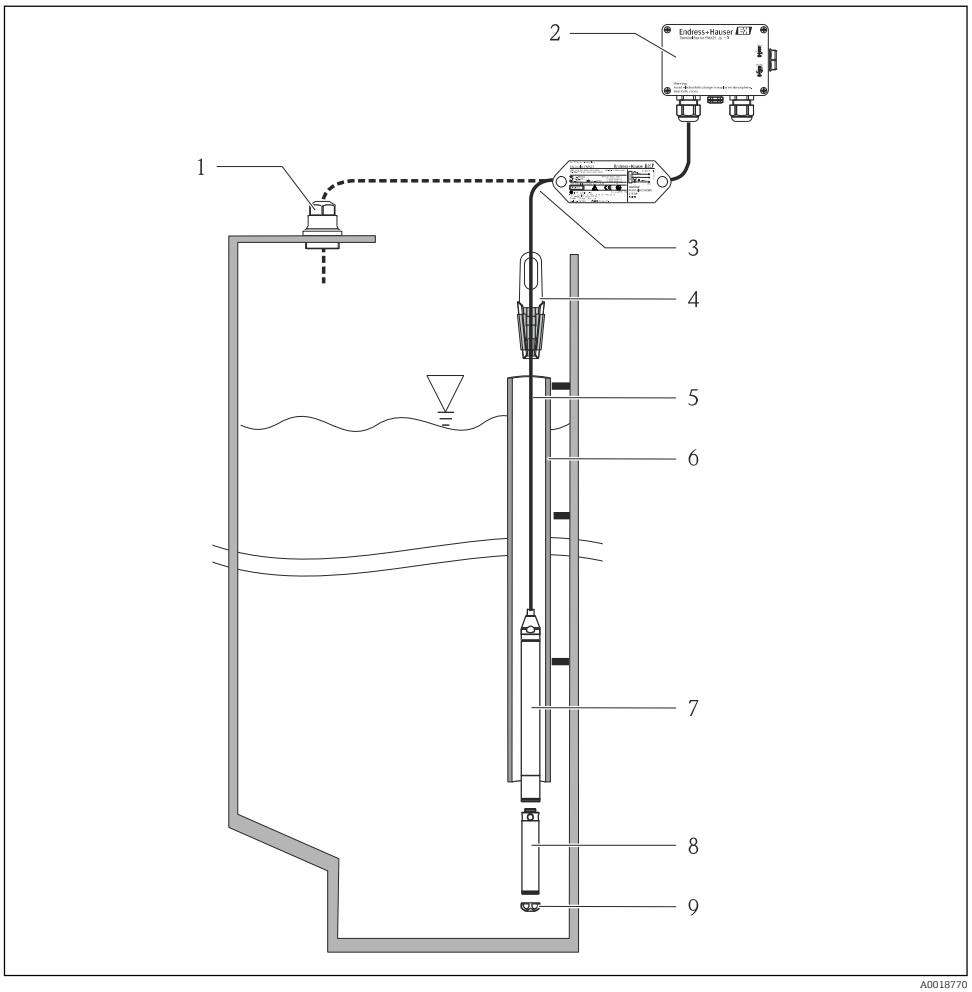

1 *Cable mounting screw can be ordered via the order code or as an accessory → 52*
2 *Terminal box can be ordered via the order code or as an accessory → 52*
3 *Bending radius of extension cable > 120 mm (4.72 in)*
4 *Mounting clamp can be ordered via the order code or as an accessory → 52*
5 *Extension cable, cable length → 28*
6 *Guide tube*
7 *Waterpilot FMX21*
8 *Additional weight can be ordered as an accessory for the FMX21 with external diameter of 22 mm (0.87 in) and 29 mm (1.14 in)→ 52*
9 *Protection cap*

Additional installation instructions

- Sideways movement of the level probe can result in measuring errors. For this reason, install the probe at a point free from flow and turbulence, or use a guide tube. The internal diameter of the guide tube should be at least 1 mm (0.04 in) greater than the external diameter of the selected FMX21.
- To avoid mechanical damage to the measuring cell, the device is equipped with a protection cap.
- The cable must end in a dry room or a suitable terminal box. The terminal box from Endress +Hauser provides humidity and climatic protection and is suitable for installation outdoors → 52.
- Cable length tolerance: < 5 m (16 ft): ±17.5 mm (0.69 in); > 5 m (16 ft): ±0.2 %
- If the cable is shortened, the filter at the pressure compensation tube must be reattached. Endress +Hauser offers a cable shortening kit for this purpose → 52 (documentation SD00552P/00/A6).

- Endress+Hauser recommends using twisted, shielded cable.
- In shipbuilding applications, measures are required to restrict the spread of fire along cable looms.
- The length of the extension cable depends on the intended level zero point. The height of the protection cap must be taken into consideration when designing the layout of the measuring point. The level zero point (E) corresponds to the position of the process isolating diaphragm. Level zero point = E; tip of probe = L (see the following diagram).
  For dimensions, see "Mechanical construction" section.

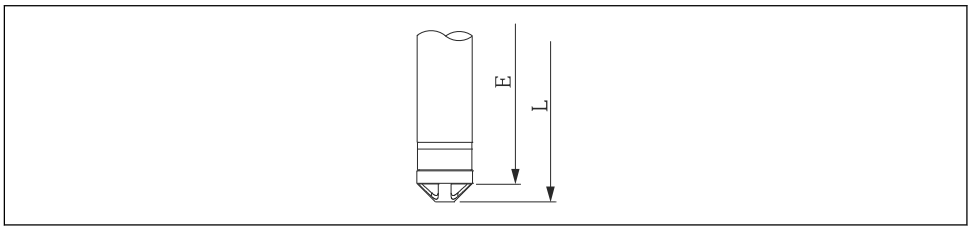

A0026013

Cable length

- Pay attention to the "Load"
- Cable lengths available for order
  - Customer-specific in meters or feet
  - Limited cable length when performing installation with freely suspended device with cable mounting screw or mounting clamp, as well as for Ex approval: max. 300 m (984 ft).

When using the measuring device in hazardous areas, installation must comply with the corresponding national standards and regulations and the Safety Instructions or Installation or Control Drawings.

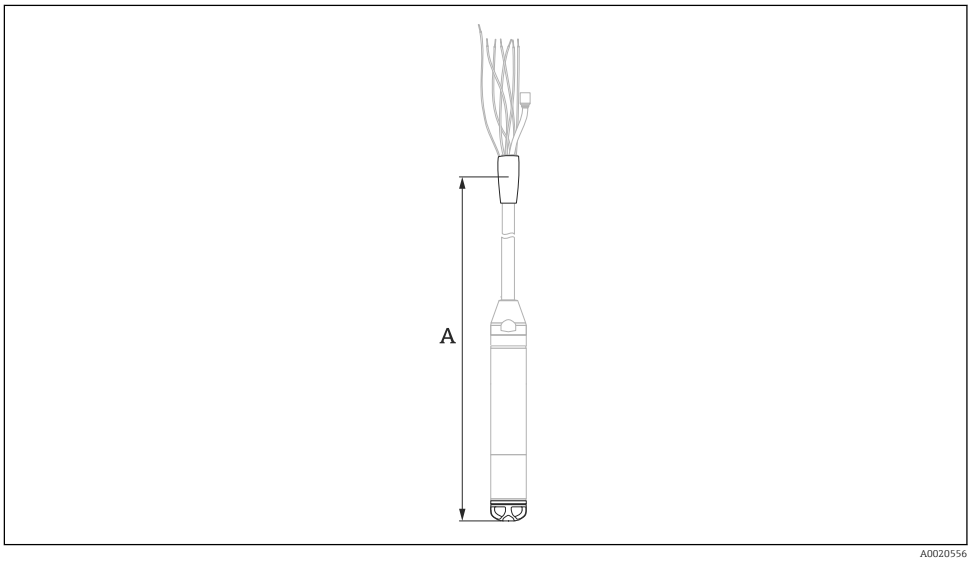

A0020556

A Length of extension cable

Cable	Option [1]
10 m cable, can be shortened, PE	10
20 m cable, can be shortened, PE	11
..... m cable, can be shortened, PE	15
30 ft cable, can be shortened, PE	20
60 ft cable, can be shortened, PE	21
..... ft cable, can be shortened, PE	25
10 m cable, can be shortened, FEP	30
20 m cable, can be shortened, FEP	31

Cable	Option [1]
..... m cable, can be shortened, FEP	35
30 ft cable, can be shortened, FEP	40
60 ft cable, can be shortened, FEP	41
..... ft cable, can be shortened, FEP	45
10 m cable, can be shortened, PUR	50
20 m cable, can be shortened, PUR	51
..... m cable, can be shortened, PUR	55
30 ft cable, can be shortened, PUR	60
60 ft cable, can be shortened, PUR	61
..... ft cable, can be shortened, PUR	65

1) Ordering information: Product Configurator order code for "Probe connection"

Technical data for cable

- Minimum bending radius: 120 mm (4.72 in)
- Tensile strength: max. 950 N (213.56 lbf)
- Cable extraction force (= tensile force required to extract the cable from the probe):
  - PE, FEP: typically ≥ 400 N (89.92 lbf), PUR: typically ≥ 150 N (33.72 lbf)
  - when used in hazardous area: ≥ 100 N (73.75 lbf)
- UV-resistant (UV = ultraviolet)
- PE: For use in drinking water

Cable marking

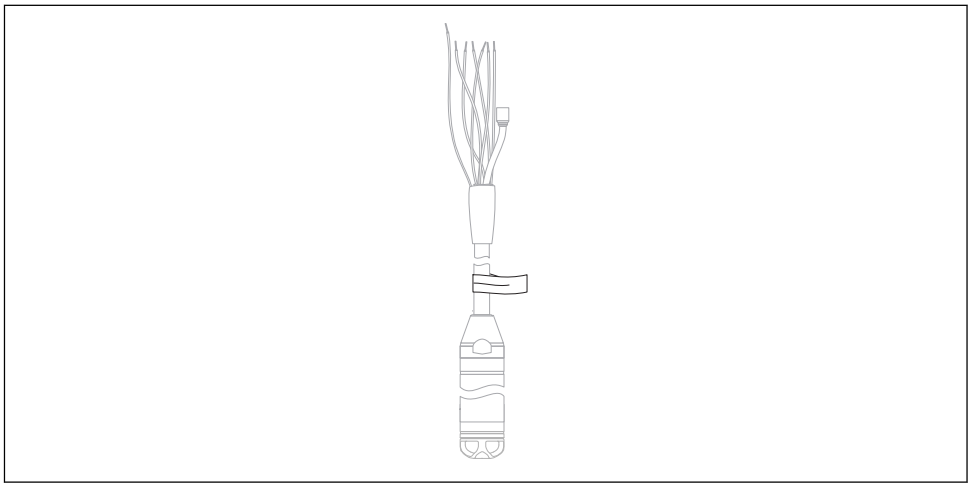

A0030955

- To make installation easier, Endress+Hauser marks the extension cable if a customer-specific length has been ordered.
  Ordering information: Product Configurator order code for "Service", option "IR" or "IS".
- Cable marking tolerance (distance to lower end of level probe):
  Cable length < 5 m (16 ft): ±17.5 mm (0.69 in)
  Cable length > 5 m (16 ft): ±0.2 %
- Material: PET, stick-on label: acrylic
- Immunity to temperature change: −30 to +100 °C (−22 to +212 °F)

NOTICE

The marking is used exclusively for installation purposes.

▶ The mark must be thoroughly removed without trace in the case of devices with drinking water approval. The extension cable must not be damaged in the process.

Not for use of the FMX21 in hazardous areas.

Cable shortening kit

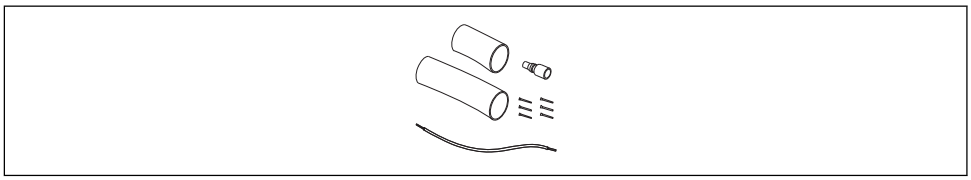

A0030948

The cable shortening kit is used to shorten a cable easily and professionally.

The cable shortening kit is not designed for the FMX21 with FM/CSA approval.

- Ordering information: Product Configurator order code for "Accessories enclosed", option "PW"
- Associated documentation SD00552P/00/A6.

Environment

Ambient temperature range

FMX21 + Pt100 (optional)

- With external diameter of 22 mm (0.87 in) and 42 mm (1.65 in):
  −10 to +70 °C (+14 to +158 °F) (= medium temperature)
- With external diameter of29 mm (1.14 in):
  0 to +50 °C (+32 to +122 °F) (= medium temperature)

Cable

(when mounted in a fixed position)
- With PE: −30 to +70 °C (−22 to +158 °F)
- With FEP: −40 to +70 °C (−40 to +158 °F)
- With PUR: −40 to +70 °C (−40 to +158 °F)

Terminal box

−40 to +80 °C (−40 to +176 °F)

TMT181 temperature head transmitter (optional) for FMX21 4 to 20 mA Analog

−40 to +85 °C (−40 to +185 °F)

Temperature head transmitter 2-wire, configured for a measuring range of −20 to +80 °C (−4 to +176 °F). This configuration offers a temperature range of 100 K which can be easily mapped. Please note that the Pt100 resistance temperature detector is suitable for a temperature range of −10 to +70 °C (14 to +158 °F)

The TMT181 temperature head transmitter is not designed for use in hazardous areas incl. CSA GP.

TMT182 temperature head transmitter (optional) for FMX21 4 to 20 mA HART

−40 to +85 °C (−40 to +185 °F)

Temperature head transmitter 2-wire, configured for a measuring range of −20 to +80 °C (−4 to +176 °F). This configuration offers a temperature range of 100 K which can be easily mapped. Please note that the Pt100 resistance temperature detector is suitable for a temperature range of −10 to +70 °C (14 to +158 °F)

The TMT182 temperature head transmitter is not designed for use in hazardous areas incl. CSA GP.

Storage temperature range

FMX21 + Pt100 (optional)

−40 to +80 °C (−40 to +176 °F)

Cable

(when mounted in a fixed position)
- With PE: −30 to +70 °C (−22 to +158 °F)
- With FEP: −30 to +80 °C (−22 to +176 °F)
- With PUR: −40 to +80 °C (−40 to +176 °F)

Terminal box

−40 to +80 °C (−40 to +176 °F)

TMT181 temperature head transmitter (optional) for FMX21 4 to 20 mA Analog

−40 to +100 °C (−40 to +212 °F)

TMT182 temperature head transmitter (optional) for FMX21 4 to 20 mA HART

−40 to +100 °C (−40 to +212 °F)

Degree of protection

FMX21 + Pt100 (optional)

IP68, permanently hermetically sealed at 20 bar (290 psi) (~200 m H_2O)

Terminal box (optional)

IP66, IP67

TMT181 temperature head transmitter (optional) for FMX21 4 to 20 mA Analog

IP00, condensation permitted

When installed in the optional terminal boxes: IP66/IP67

TMT182 temperature head transmitter (optional) for FMX21 4 to 20 mA HART

IP00, condensation permitted

Electromagnetic compatibility (EMC)

FMX21 + Pt100 (optional)

- EMC in accordance with all relevant requirements of EN 61326 series. For details, refer to the Declaration of Conformity.
- Maximum deviation: < 0.5 % of span.

TMT181 temperature head transmitter (optional) for FMX21 4 to 20 mA Analog

Interference emission to EN 61326 Class B equipment, interference immunity to EN 61326 Appendix A (Industrial). For details, refer to the Declaration of Conformity.

TMT182 temperature head transmitter (optional) for FMX21 4 to 20 mA HART

EMC in accordance with all relevant requirements of EN 61326 series. For details, refer to the Declaration of Conformity.

Overvoltage protection

FMX21 + Pt100 (optional)

- Integrated overvoltage protection as per EN 61000-4-5 (500 V symmetrical/1000 V asymmetrical)
- Overvoltage protection ≥ 1.0 kV, external if necessary

TMT181 temperature head transmitter (optional) for FMX21 4 to 20 mA Analog

Provide overvoltage protection, externally if necessary → 10.

TMT182 temperature head transmitter (optional) for FMX21 4 to 20 mA HART

Provide overvoltage protection, externally if necessary → 10.

Process

Medium temperature range

FMX21 + Pt100 (optional)

- With external diameter of 22 mm (0.87 in) and 42 mm (1.65 in):
  −10 to +70 °C (+14 to +158 °F)
- With external diameter of 29 mm (1.14 in):
  0 to +50 °C (+32 to +122 °F)

TMT181 temperature head transmitter (optional) for FMX21 4 to 20 mA Analog

−40 to +85 °C (−40 to +185 °F)

(= ambient temperature), install temperature head transmitter outside the medium.

Temperature head transmitter 2-wire, configured for a measuring range of −20 to +80 °C (−4 to +176 °F). This configuration offers a temperature range of 100 K which can be easily mapped. Please note that the Pt100 resistance temperature detector is suitable for a temperature range of −10 to +70 °C (14 to +158 °F)

The TMT181 temperature head transmitter is not designed for use in hazardous areas incl. CSA GP.

TMT181 temperature head transmitter (optional) for FMX21 4 to 20 mA HART

−40 to +85 °C (−40 to +185 °F)

(= ambient temperature), install temperature head transmitter outside the medium.

Temperature head transmitter 2-wire, configured for a measuring range of −20 to +80 °C (−4 to +176 °F). This configuration offers a temperature range of 100 K which can be easily mapped. Please note that the Pt100 resistance temperature detector is suitable for a temperature range of −10 to +70 °C (14 to +158 °F)

The TMT182 temperature head transmitter is not designed for use in hazardous areas incl. CSA GP.

Medium temperature limit

FMX21 + Pt100 (optional)

With external diameter of 22 mm (0.87 in) and 42 mm (1.65 in):
−20 to +70 °C (−4 to +158 °F)

In hazardous areas incl. CSA GP, the medium temperature limit is −10 to +70 °C (+14 to +158 °F).

With external diameter of29 mm (1.14 in): 0 to +50 °C (+32 to +122 °F)

The FMX21 may be operated in this temperature range. The specification values, such as accuracy, may be exceeded.

Pressure specifications

⚠ WARNING

The maximum pressure for the measuring device depends on the lowest-rated element with regard to pressure.

- For pressure specifications, see the "Measuring range" section and the "Mechanical construction" section.
- The measuring device must be operated only within the specified limits!
- The Pressure Equipment Directive (2014/68/EU) uses the abbreviation "PS". The abbreviation "PS" corresponds to the MWP (maximum working pressure) of the measuring device.
- MWP (maximum working pressure): The MWP (maximum working pressure) is specified on the nameplate. This value refers to a reference temperature of +20 °C (+68 °F) and may be applied to the device for an unlimited time. Observe temperature dependency of the MWP.
- OPL (Over Pressure Limit = sensor overload limit): The test pressure corresponds to the over pressure limit of the sensor and may only be applied for a limited time period to ensure measurement within specification and in order to avoid permanent damage. In the case of sensor range and process connections where the over pressure limit (OPL) of the process connection is smaller than the nominal value of the sensor, the device is set at the factory, at the very maximum, to the OPL value of the process connection. If you want to use the entire sensor range, select a process connection with a higher OPL value.
- avoid steam hammering! Steam hammering can cause zero point drifts. Recommendation: Residue (such as condensation or drops of water) can remain on the process isolating diaphragm after CIP cleaning and lead to local steam hammering if steam cleaning is performed again. In practice, drying the process isolating diaphragm (e.g. by blowing) has proved to prevent steam hammering.

Mechanical construction

Dimensions of the level probe

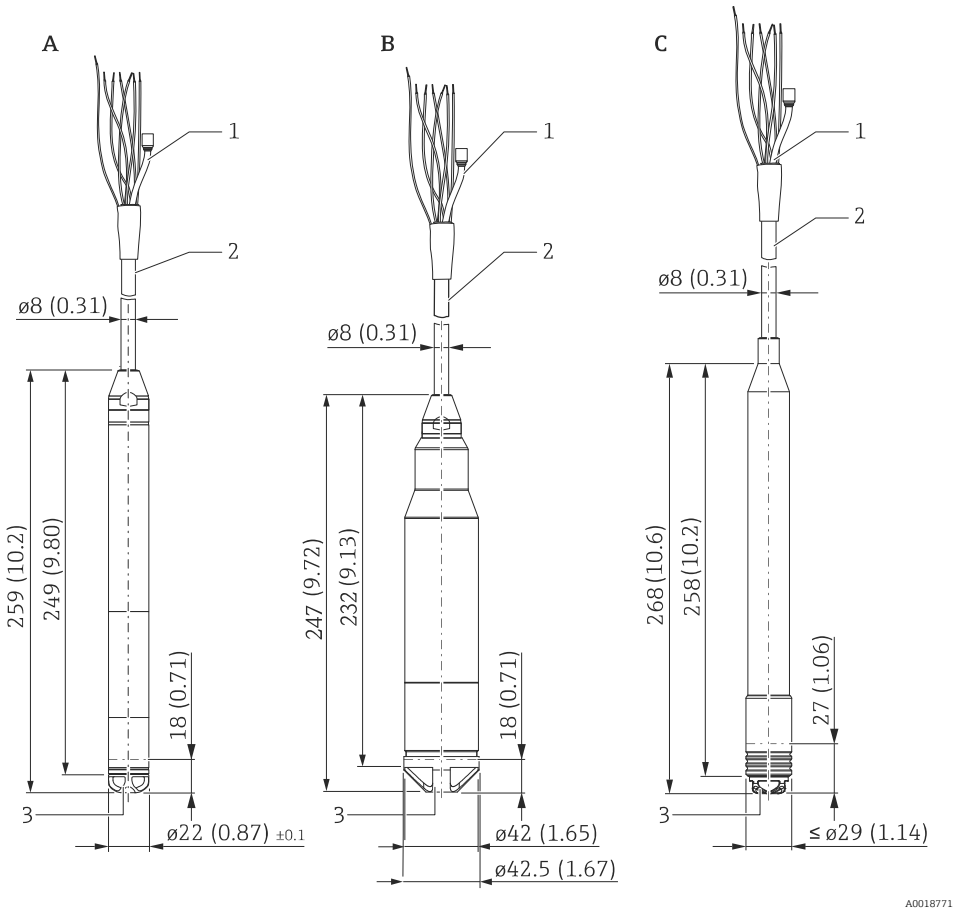

A Product Configurator order code for "Probe tube", option "1" or "Accessories"
B Product Configurator order code for "Probe tube", option "2"
C Product Configurator order code for "Probe tube", option "5"
1 Pressure compensation tube
2 Extension cable (length, see → 🖹 28
3 Protection cap

Engineering unit mm (in)

Dimensions of the mounting clamp

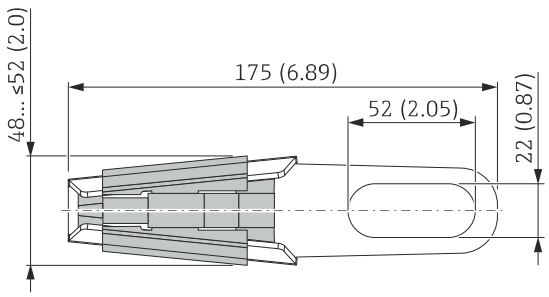

Engineering unit mm (in)

Ordering information: Product Configurator order code for "Accessories", option "PO" → 52

Dimensions of cable mounting screw

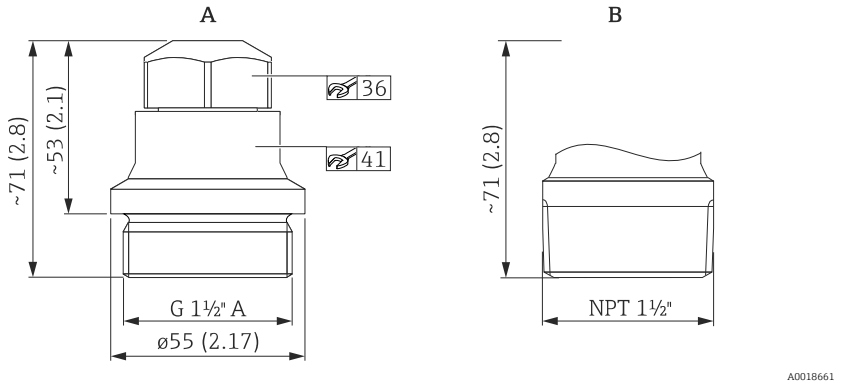

A G 1½" A: Product Configurator order code for "Accessories", option "PQ" → 52
B NPT 1½": Product Configurator order code for "Accessories", option "PR" → 52

Engineering unit mm (in)

Use only in unpressurized vessels.

Dimensions of terminal box IP66, IP67 with filter

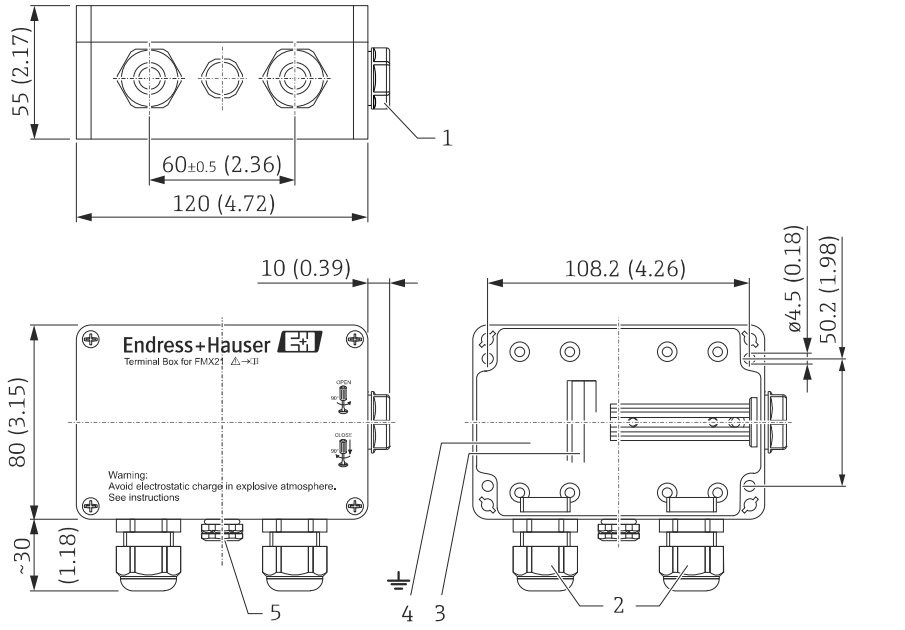

1 *Dummy plug M20x1.5*
2 *Cable gland M20x1.5*
3 *4 to 20 mA; terminals for 0.08 to 2.5 mm (28 to 14 AWG)0.08 to.2.5 mm²*
4 *Ground connection; terminals for 0.08 to 2.5 mm (28 to 14 AWG)0.08 to 2.5 mm²*
5 *GORE-TEX® filter*

Engineering unit mm (in)

Terminal box IP66/IP67 with GORE-TEX® filter incl. 3 integrated terminals. The terminal box is also suitable for the installation of a temperature head transmitter or four other terminals

Ordering information:
- Terminal box: Product Configurator order code for "Accessories enclosed", option "PS" → 52
- TMT181: Product Configurator order code for "Accessories enclosed", option "PX" → 52
- TMT182: Product Configurator order code for "Accessories enclosed", option "PT" → 52

The terminal box is not designed for the FMX21 with type of protection Ex nA in hazardous areas. If the terminal box is used in a hazardous area, the Safety Instructions of the relevant device must be observed, as well as the applicable regulations for explosion protection.

If the FMX21 with optional Pt100 is supplied, a terminal strip is provided with the terminal box for the purpose of wiring the Pt100.

The 4-terminal strip is not designed for use in hazardous areas incl. CSA GP.

Dimensions of the TMT181 temperature head transmitter for FMX21 4 to 20 mA Analog

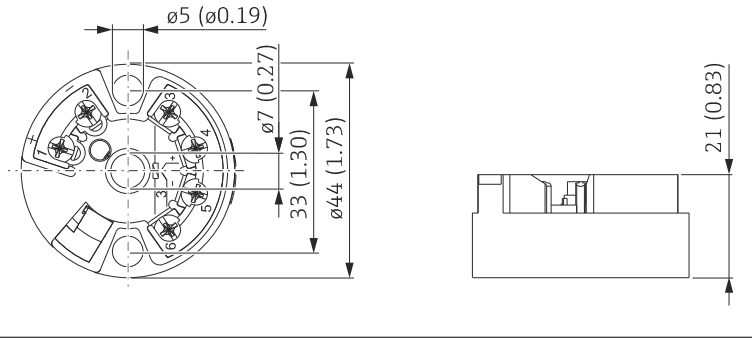

Engineering unit mm (in)

Ordering information:

Product Configurator order code for "Accessories enclosed", option "PX" → 🖹 52

Dimensions of the TMT182 temperature head transmitter for FMX21 4 to 20 mA HART

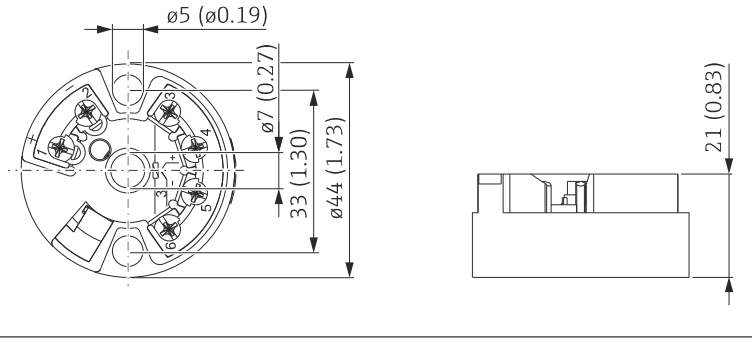

Engineering unit mm (in)

Ordering information:

Product Configurator order code for "Accessories enclosed", option "PT" → 🖹 52

Terminal box with integrated TMT181 temperature head transmitter for FMX21 4 to 20 mA Analog

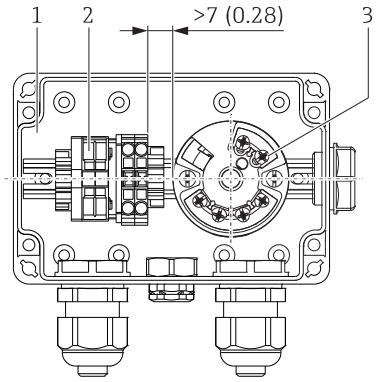

1 Terminal box
2 Terminal strip/terminals
3 TMT181 temperature head transmitter

Engineering unit mm (in)

A distance of > 7 mm (0.28 in) must be maintained between the terminal strip and the TMT181 temperature head transmitter.

Terminal box with integrated TMT182 temperature head transmitter for FMX21 4 to 20 mA HART

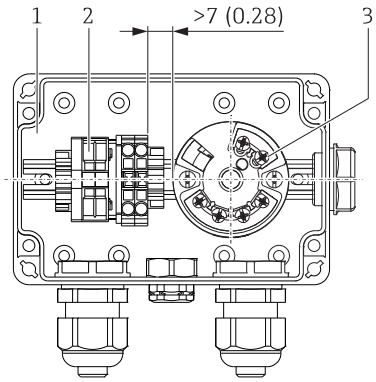

1 Terminal box
2 Terminal strip/terminals
3 TMT182 temperature head transmitter

Engineering unit mm (in)

A distance of > 7 mm (0.28 in) must be maintained between the terminal strip and the TMT182 temperature head transmitter.

Additional weight

For FMX21 with external diameter of 22 mm (0.87 in) or 29 mm (1.14 in)

- Endress+Hauser offers additional weights to prevent sideways movement that results in measuring errors, or to make it easier to lower the device in a guide tube. You can screw several weights together. The weights are screwed directly onto the FMX21. For the FMX21 with external diameter of 29 mm (1.14 in), a maximum of 5 weights may be screwed on. In conjunction with the Ex nA approval, a maximum of one additional weight is permitted for the FMX21 with external diameter of 29 mm (1.14 in).
- Order number: 52006153 Ordering information: Product Configurator order code for "Accessories enclosed", option "PU"

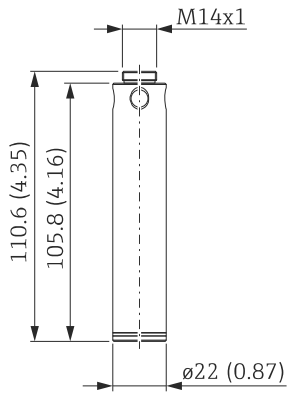

Engineering unit mm (in)

Testing adapter

For FMX21 with external diameter of 22 mm (0.87 in) or 29 mm (1.14 in)

- Endress+Hauser offers a testing adapter to ease function-testing of the level probes.
- Observe the maximum pressure for compressed air hose and maximum overload for level probe → 🖹 14
- Maximum pressure for the quick coupling piece provided: 10 bar (145 psi)
- Adapter material: 304 (1.4301)
- Material of quick coupling piece: anodized aluminum
- Order number 52011868
  Ordering information: Product Configurator order code for "Accessories enclosed", option "PV"

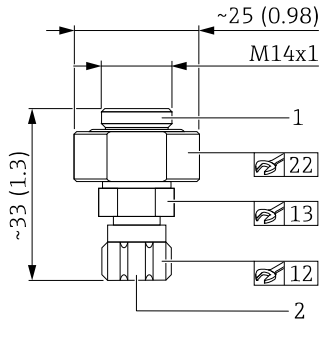

1 FMX21 level probe connection
2 Compressed air hose connection, internal diameter, quick coupling piece 4 mm (0.16 in)

Engineering unit mm (in)

RIA15 in the field housing

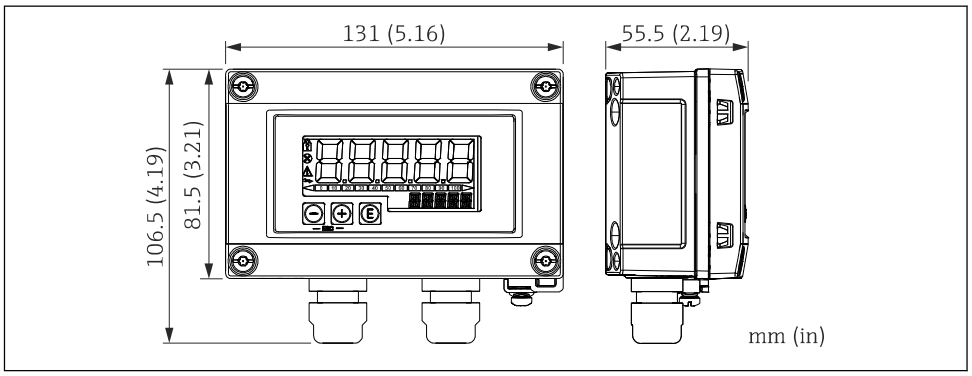

5 *Dimensions of RIA15 in field housing, engineering unit: mm (in)*

The RIA15 remote display can be ordered together with the device. Product structure, feature 620 "Accessories enclosed":

- Option R4 "Remote display RIA15 non-hazardous area, field housing"
- Option R5 "Remote display RIA15 Ex= explosion protection approval, field housing"

Alternatively available as an accessory, for details see Technical Information TI01043K and Operating Instructions BA01170K

HART communication resistor

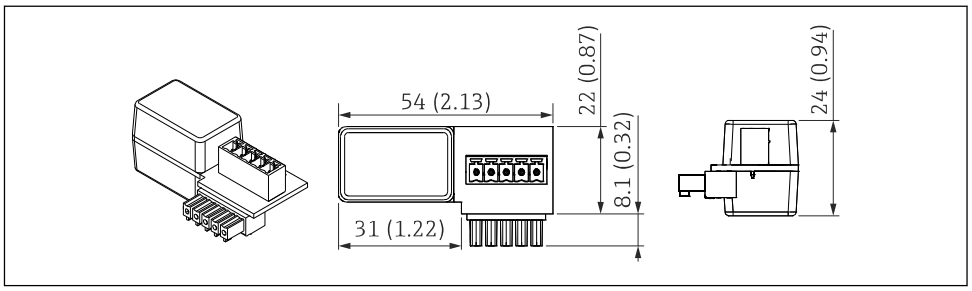

6 *Dimensions of HART communication resistor, engineering unit: mm (in)*

A communication resistor is required for HART communication. If this is not already present (e.g. in the power supply RMA, RN221N, RNS221, ...), it can be ordered with the device via the product structure, feature 620 "Accessories enclosed": option R6 "HART communication resistor hazardous / non-hazardous area".

Alternatively available as an accessory, for details see Technical Information TI01043K and Operating Instructions BA01170K

The HART communication resistor is specially designed for use with the RIA15 and can be attached easily.

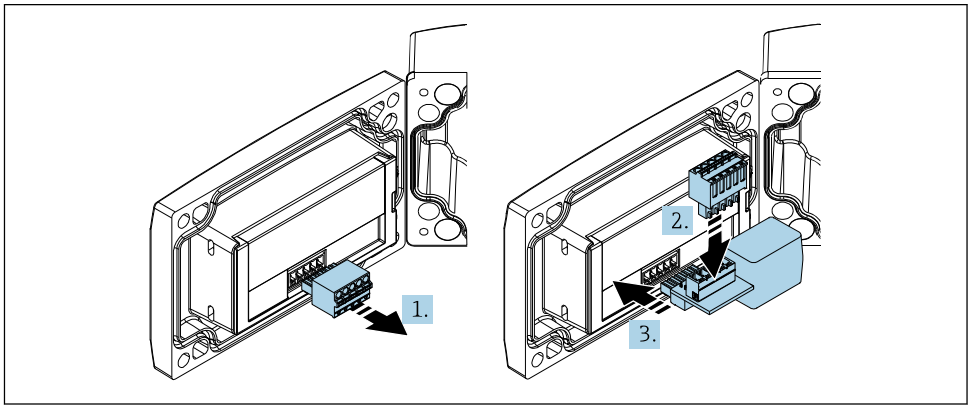

1. Disconnect plug-in terminal block.
2. Insert the terminal block into the slot provided on the HART communication resistor module.
3. Insert the HART communication resistor in the slot in the housing.

Weight

Component part		Weight
Level probe, external diameter of 22 mm (0.87 in)		344 g (12.133 oz)
Level probe, external diameter of 42 mm (1.65 in)		1376 g (48.532 oz)
Level probe, external diameter of 29 mm (1.14 in)		394 g (13.896 oz)
Extension cable	PE	52 g/m (0.035 lbs/1 ft)
	PUR	60 g/m (0.040 lbs/1 ft)
	FEP	108 g/m (0.072 lbs/1 ft)
Suspension clamp		170 g (5.996 oz)
Cable mounting screw G 1½" A		770 g (27.158 oz)
Cable mounting screw NPT 1½"		724 g (25.535 oz)
Terminal box		235 g (8.288 oz)
TMT181 temperature head transmitter		40 g (1.411 oz)
TMT182 temperature head transmitter		40 g (1.411 oz)
Additional weight		300 g (10.581 oz)
Testing adapter		39 g (1.376 oz)

Materials

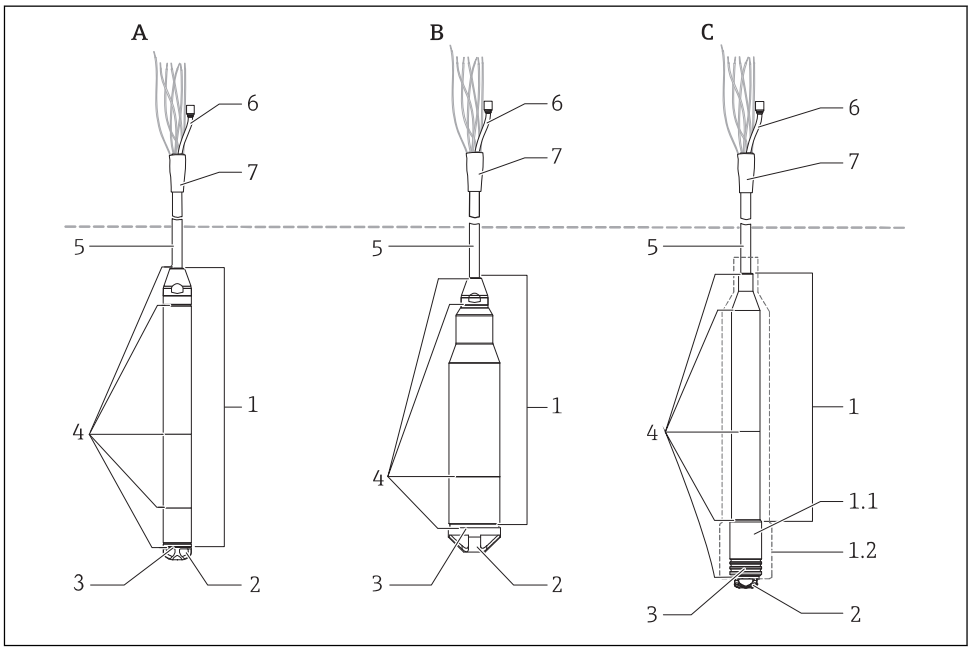

Materials in contact with process

Item number	Component part	Material
1	▪ A: Level probe, external diameter of 22 mm (0.87 in) ▪ B: Level probe, external diameter of 42 mm (1.65 in) ▪ C: Level probe, max. external diameter of 29 mm (1.14 in)	316L (1.4404/1.4435) [1]
1.1	Sensor sleeve	PPS (Polyphenylene sulfide)
1.2	Heat-shrink tube	Polyolefin and hot melt adhesive
	The heat-shrink tube around the level probe acts as insulation. It prevents electrical contact between the level probe and the tank. Electrochemical corrosion is thus avoided.	
2	Protection cap for A and C: with outer diameter 22 mm (0.87 in) and 29 mm (1.14 in) (order number: 52008999)	POM
	Protection cap for B: device with outer diameter 42 mm (1.65 in) (order number: 917755-0000)	PFA
3	Process ceramic	Al_2O_3 (Aluminum oxide ceramic)
4	Seal	EPDM [2]
		FKM Viton [3]
5	Extension cable insulation Additional information	Choose from: ▪ PE-LD (Low-density polyethylene) ▪ FEP (Fluorinated ethylene propylene) ▪ PUR (Polyurethane)

1) Material 316L (1.4404/1.4435) is not in contact with the process in the case of level probe C
2) Product Configurator order code for "Seal", option "H"
3) Product Configurator order code for "Seal", option "A"

Materials not in contact with process

Item number	Component part	Material
6	Pressure compensation tube	PA
7	Heat-shrink tube	Polyolefin

Terminal box (not in contact with process)

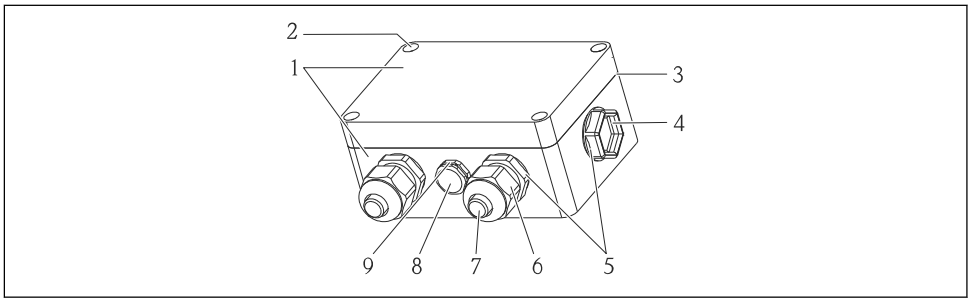

A0018917

Item number	Component part	Material
1	Housing	PC
2	Mounting screws (4 x)	A2
3	Seal	CR (Chloroprene rubber)
4	Dummy plug M20x1.5	PBT-GF30
5	Cable gland M20x1.5	PE-HD
6		PA6
7		PA6-GF30
8	Pressure compensation filter	PA6-GF10, ePTFE
9	Pressure compensation filter, O-ring	Silicone (VMQ)

Cable mounting screw (not in contact with process)

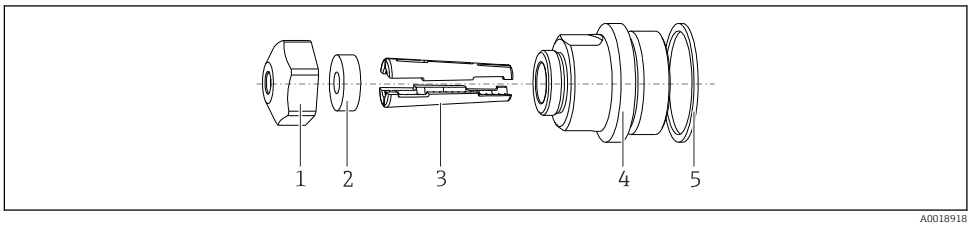

A0018918

Item number	Component part	Material
1	Cover for cable mounting screw	304 (1.4301)
2	Sealing ring	NBR
3	Clamping sleeves	PA66-GF35
4	Adapter for cable mounting screw G 1½" A, NPT 1½"	304 (1.4301)
5	Seal ® Only for G 1½" A	EPDM

Suspension clamp

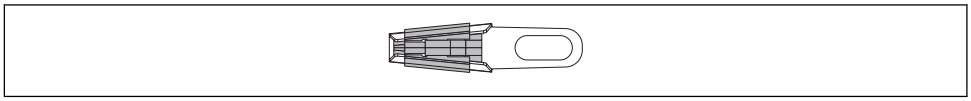

A0030950

Material: 316L (1.4404) and fiber-glass reinforced PA (polyamide)

Additional weight

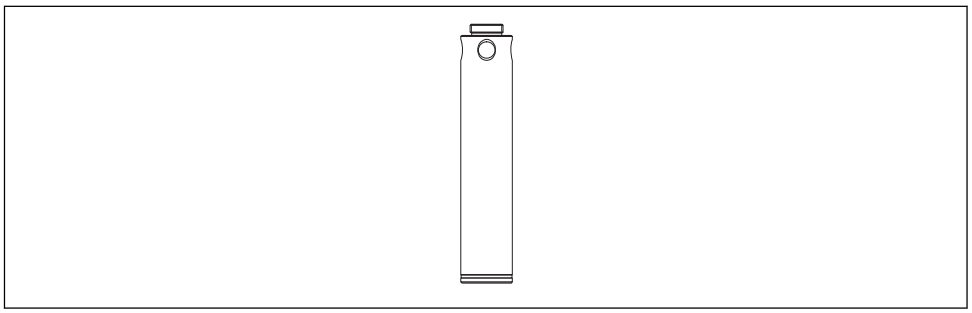

A0030954

Material: 316L (1.4435)

Testing adapter for FMX21 with outer diameter 22 mm (0.87 in) or 29 mm (1.14 in)

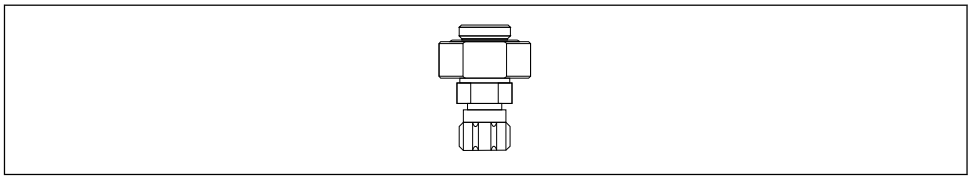

A0030956

Adapter material: 304 (1.4301)

Material of quick coupling piece: anodized aluminum

Testing adapter for FMX21 with outer diameter 42 mm (1.65 in)

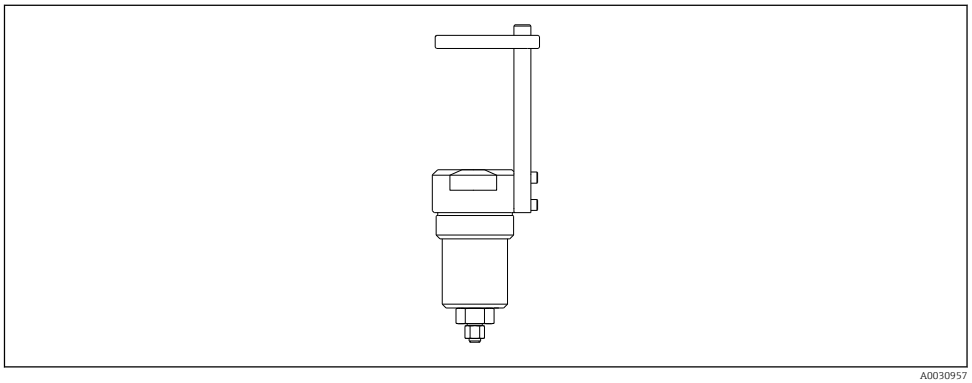

A0030957

Adapter material: 304 (1.4301)

Material of quick coupling piece: anodized aluminum

Extension cable

PE	PUR	FEP
▪ Abrasion-resistant extension cable with strain-relief members made of high-strength PE fibers ▪ Shielded (aluminum) ▪ Insulated with polyethylene (PE), black ▪ Copper wires, twisted ▪ Pressure compensation tube with Teflon filter	▪ Abrasion-resistant extension cable with strain-relief members made of high-strength PE fibers ▪ Shielded (aluminum) ▪ Insulated with polyurethane (PUR), black ▪ Copper wires, twisted ▪ Pressure compensation tube with Teflon filter	▪ Abrasion-resistant extension cable ▪ Shielded with galvanized steel wire netting ▪ Insulated with fluorinated ethylene propylene (FEP), black ▪ Copper wires, twisted ▪ Pressure compensation tube with Teflon filter

Operability

FMX21 4 to 20 mA Analog

No display or other operation facility is required to operate the device. However, the measured values can be read out with optional evaluation units.

FMX21 4 to 20 mA HART

FieldCare

FieldCare is an Endress+Hauser asset management tool based on FDT technology. With FieldCare, you can configure all Endress+Hauser devices as well as devices from other manufacturers that support the FDT standard.

FieldCare supports the following functions:
- Configuration of transmitters in online and offline mode
- Loading and saving device data (upload/download)
- Documentation of the measuring point

Connection options:
- Via Commubox FXA195 and the USB interface of a computer
- Via Fieldgate FXA520

For additional information and free download of FieldCare, see → www.de.endress.com → Download → Text Search: FieldCare

DeviceCare

Function scope

Tool for connecting and configuring Endress+Hauser field devices.

The fastest way to configure Endress+Hauser field devices is with the dedicated "DeviceCare" tool. Together with the device type managers (DTMs) it presents a convenient, comprehensive solution.

For details, see Innovation brochure IN01047S

Field Xpert SFX

Field Xpert SFX is an industrial PDA with integrated 3.5" touchscreen from Endress+Hauser based on Windows Mobile. It offers wireless communication via the optional VIATOR® Bluetooth ® modem as a point-to-point connection to a HART device, or via WiFi and Endress+Hauser's Fieldgate FXA520 to one or more HART devices. Field Xpert also works as a stand-alone device for asset management applications. For details, refer to BA00060S/04/EN.

RIA15

The RIA15 can be used as a local display unit and for the basic commissioning of the Waterpilot FMX21 hydrostatic level sensor via HART.

Certificates and approvals

CE mark

The device meets the legal requirements of the relevant EC directives. Endress+Hauser confirms that the device has been successfully tested by applying the CE mark.

RCM-Tick marking

The supplied product or measuring system meets the ACMA (Australian Communications and Media Authority) requirements for network integrity, interoperability, performance characteristics as well as health and safety regulations. Here, especially the regulatory arrangements for electromagnetic compatibility are met. The products are labelled with the RCM- Tick marking on the name plate.



A0029561

Ex approvals

- ATEX
- CSA C/US
- FM
- IEC
- NEPSI
- INMETRO

- The approvals apply exclusively to the Waterpilot FMX21 without Pt100 and without TMT181/TMT182.
- Waterpilot FMX21 is only available for use in hazardous areas with the FKM Viton seal.
- All explosion protection data are given in separate documentation which is available upon request. The Ex documentation is supplied as standard with all Ex-systems → 📄 5.

EAC conformity

The measuring system meets the legal requirements of the applicable EAC guidelines. These are listed in the corresponding EAC Declaration of Conformity together with the standards applied.

Endress+Hauser confirms successful testing of the device by affixing to it the EAC mark.

Drinking water approval

For FMX21 with an external diameter of 22 mm (0.87 in) with EPDM seal

Designation	Option [1]
KTW	LQ
NSF61	LR
ACS	LS

1) Product Configurator order code for "Additional ordering information (optional)"

Marine approval

For FMX21 with outer diameter 22 mm (0.87 in).

Designation	Option [1]
GL	LE
ABS	LF
BV	LH
DNV	LI

1) Product Configurator order code for "Additional ordering information (optional)"

Other standards and guidelines

The applicable European guidelines and standards can be found in the relevant EU Declarations of Conformity. The following were also applied:

DIN EN 60770 (IEC 60770):

Transmitters for use in industrial process control systems Part 1: Methods for performance evaluation

Methods for evaluating the performance of transmitters for control and regulation in industrial process control systems.

DIN 16086:

Electrical pressure measuring instruments, pressure sensors, pressure transmitters, pressure measuring instruments, concepts, specifications on data sheets

Procedure for writing specifications in data sheets for electrical pressure measuring instruments, pressure sensors and pressure transmitters.

EN 61326:

Electrical equipment for measurement, control and laboratory use – EMC requirements

EN 61010-1 (IEC 61010-1):

Protection Measures for Electrical Equipment for Measurement, Control, Regulation and Laboratory Procedures

EN 60529:

Degrees of protection provided by enclosures (IP code)

Calibration

Designation	Option [1]
Factory calibration certificate, 5-point	F1

1) Product Configurator order code for "Calibration"

Pressure Equipment Directive 2014/68/EU (PED)

Pressure equipment with allowable pressure ≤ 200 bar (2 900 psi)

Pressure equipment (with a maximum allowable pressure PS ≤ 200 bar (2 900 psi)) can be classified as pressure accessories in accordance with Pressure Equipment Directive 2014/68/EU. If the maximum allowable pressure is ≤ 200 bar (2 900 psi) and the pressurized volume of the pressure equipment is ≤ 0.1 l, the pressure equipment is subject to the Pressure Equipment Directive (cf. Pressure Equipment Directive 2014/68/EU, Article 4, point 3). The Pressure Equipment Directive only requires that the pressure equipment shall be designed and manufactured in accordance with the "sound engineering practice of a Member State".

Reasons:

- Pressure Equipment Directive (PED) 2014/68/EU Article 4, point 3
- Pressure equipment directive 2014/68/EU, Commission's Working Group "Pressure", Guideline A-05 + A-06

Note:

A partial examination shall be performed for pressure instruments that are part of safety equipment for the protection of a pipe or vessel from exceeding allowable limits (safety accessory in accordance with Pressure Equipment Directive 2014/68/EU, Article 2, point 4).

Calibration unit

Designation	Option [1]
Sensor range; %	A
Sensor range; mbar/bar	B
Sensor range; kPa/MPa	C
Sensor range; mm/m H2O	D
Sensor range; in H2O/ft H2O	E

Designation	Option [1]
Sensor range; psi	F
Customized pressure; see additional specification	J
Customized level; see additional specification	K

1) Product Configurator order code for "Calibration; unit"

Service

Designation	Option [1]
Configured min alarm current	IA
Adjusted HART Burst Mode PV	IB
Adjusted density compensation	IC
... m cable marking>installation	IR
... ft cable marking>installation	IS
Special version	I9

1) Product Configurator order code for "Service"

Downloading the Declaration of Conformity

http://www.endress.com/en/download



1. Select "Approvals & Certificates"
2. Select "Manufact. Declaration"
3. Enter the required product code
4. Click "Search"

The available downloads are displayed.

Ordering information

Detailed ordering information is available from the following sources:
- In the Product Configurator on the Endress+Hauser website: www.endress.com -> Click "Corporate" -> Select your country -> Click "Products" -> Select the product using the filters and search field -> Open product page -> The "Configure" button to the right of the product image opens the Product Configurator.
- From your Endress+Hauser Sales Center: www.addresses.endress.com

Product Configurator - the tool for individual product configuration
- Up-to-the-minute configuration data
- Depending on the device: Direct input of measuring point-specific information such as measuring range or operating language
- Automatic verification of exclusion criteria
- Automatic creation of the order code and its breakdown in PDF or Excel output format
- Ability to order directly from the Endress+Hauser Online Shop

Scope of delivery

- Measuring device
- Optional accessories
- Brief Operating Instructions
- Certificates

Configuration data sheet

Level

The following configuration data sheet must be completed and included with the order if option "K: customized level" has been selected for order code "090: Calibration; unit" in the product structure.

Pressure unit				**Output unit (scaled unit)**				
				Mass	Lengths	Volume	Volume	Percent
❑ mbar	❑ mmH_2O	❑ mmHg	❑ Pa	❑ kg	❑ m	❑ l	❑ gal	❑ %
❑ bar	❑ mH_2O		❑ kPa	❑ t	❑ dm	❑ hl	❑ Igal	
	❑ ftH_2O		❑ MPa	❑ lb	❑ cm			
❑ psi	❑ inH_2O	❑ kgf/cm^2			❑ mm	❑ m^3		
						❑ ft^3		
					❑ ft	❑ in^3		
					❑ inch			

Empty calibration [a]:
Low pressure value (empty) _____ [pressure engineering unit]

Empty calibration [a]:
Low pressure value (empty) _____ [scaled unit]

Full calibration [b]:
High pressure value (full) _____ [pressure engineering unit]

Full calibration [b]:
High measured value (full) _____ [scaled unit]

Damping
Damping: _____ sec

Pressure

The following configuration data sheet must be completed and included with the order if option "J: customized pressure" has been selected for order code "090: Calibration; unit" in the product structure.

Pressure unit			
❑ mbar	❑ mmH_2O	❑ mmHg	❑ Pa
❑ bar	❑ mH_2O		❑ kPa
	❑ ftH_2O		❑ MPa
❑ psi	❑ inH_2O	❑ kgf/cm^2	

Calibration range / Output		
Lower-range value (LRV):	_____	[pressure engineering unit]
Upper-range value (URV):	_____	[pressure engineering unit]

Damping		
Damping:	_____	sec

Accessories

⚠ CAUTION

Observe the additional information in the individual sections!

▶ For additional information, see the sections "Mechanical construction" → 📄 35 , "Environment", → 📄 31, "Process" → 📄 33 and "Installation" → 📄 27.

Designation	Diagram	Description	Order number / ordering information
Suspension clamp	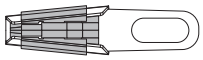 A0030950	For easy installation of the FMX21, Endress+Hauser offers a mounting clamp .	▪ 52006151 ▪ Product Configurator order code for "Accessory enclosed", option "PO"
Terminal box	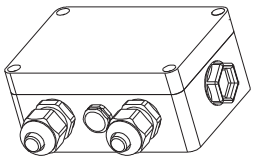 A0030967	Terminal box for terminal strip, temperature head transmitter and Pt100.	▪ 52006152 ▪ Product Configurator order code for "Accessories enclosed", option "PS"
4-terminal strip/terminals	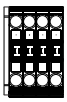 A0030951	4-terminal strip for wiring	52008938
TMT181 temperature head transmitter for FMX21 4 to 20 mA Analog	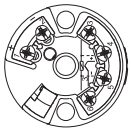 A0030952	PC-programmable (PCP) temperature head transmitter for the conversion of various input signals	▪ 52008794 ▪ Product Configurator order code for "Accessories enclosed", option "PX"
TMT182 temperature head transmitter for FMX21 4 to 20 mA HART	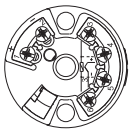 A0030952	PC-programmable (PCP) temperature head transmitter for the conversion of various input signals	▪ 51001023 ▪ Product Configurator order code for "Accessories enclosed", option "PT"
Cable mounting screws	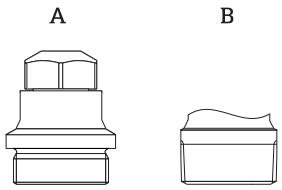 A0030953 *A G 1½" A* *B NPT 1½"*	Endress+Hauser offers a cable mounting screw for easy FMX21 mounting and to seal the measuring aperture.	▪ G 1½" A – 52008264 – Product Configurator order code for "Accessories enclosed", option "PQ" ▪ NPT 1½" – 52009311 – Product Configurator order code for "Accessories enclosed", option "PR"
Additional weight for FMX21 with outer diameter 22 mm (0.87 in) or 29 mm (1.14 in)	 A0030954	Endress+Hauser offers additional weights to prevent sideways movement that results in measuring errors, or to make it easier to lower the device in a guide tube.	▪ 52006153 ▪ Product Configurator order code for "Accessories enclosed", option "PU"

Designation	Diagram	Description	Order number / ordering information
Cable shortening kit	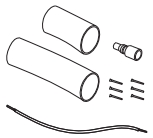 A0030948	The cable shortening kit is used to shorten a cable easily and professionally.	▪ 71222671 ▪ Product Configurator order code for "Accessories enclosed", option "PW"
Testing adapter for FMX21 with outer diameter 22 mm (0.87 in) or 29 mm (1.14 in)	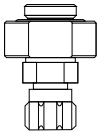 A0030956	Endress+Hauser offers a testing adapter to ease function-testing of the level probes.	▪ 52011868 ▪ Product Configurator order code for "Accessories enclosed", option "PV"
Testing adapter for FMX21 with outer diameter 42 mm (1.65 in)	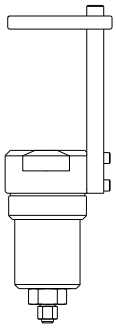 A0030957	Endress+Hauser offers a testing adapter to ease function-testing of the level probes. ▪ Observe the maximum pressure for compressed air hose and maximum overload for level probe ▪ Maximum pressure for the quick coupling piece provided: 10 bar (145 psi)	71110310
RIA15 in the field housing	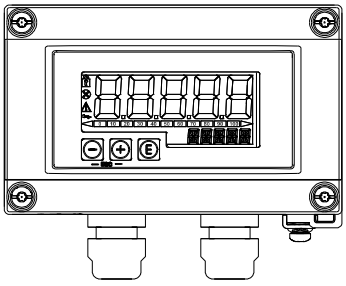 A0036164	Remote display RIA15 non-hazardous	Product structure, feature 620 "Accessory enclosed", option R4 "Remote display RIA15 non-hazardous area, field housing"
		Remote display RIA15 hazardous	Product structure, feature 620 "Accessory enclosed", option R5 "Remote display RIA15 Ex= explosion protection approval, field housing"
HART communication resistor	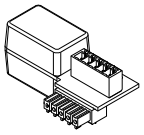 A0036165	HART communication resistor, hazardous / non-hazardous area, for use with RIA15	Product structure, feature 620 "Accessory enclosed", option R6 "HART communication resistor hazardous / non-hazardous area"

Service-specific accessories

Accessories	Description
DeviceCare SFE100	Configuration tool for HART, PROFIBUS and FOUNDATION Fieldbus field devices Technical Information TI01134S DeviceCare is available for download at www.software-products.endress.com. You need to register in the Endress+Hauser software portal to download the application.
FieldCare SFE500	FDT-based plant asset management tool FieldCare can configure all smart field units in your plant and helps you manage them. By using the status information, FieldCare is also a simple but effective way of checking the status and condition of the field devices. Technical Information TI00028S

Supplementary documentation

The following document types are also available in the Downloads area of the Endress+Hauser website: www.endress.com → Downloads

Field of Activities

- Pressure measurement: FA00004P/00/EN
- Recording technology: FA00014R/09/EN
- System components: FA00016K/09/EN

Technical Information

- Deltapilot M: TI00437P/00/EN
- Temperature head transmitter iTEMP TMT181: TI00070R/09/EN
- Temperature head transmitter iTEMP HART TMT182: TI00078R/09/EN
- RIA15: TI01043K/09/EN

Operating Instructions

- Waterpilot FMX21 4 to 20 mA Analog: BA01605P/00/EN
- Waterpilot FMX21 4 to 20 mA HART: BA00380P/00/EN
- RIA15: BA01170K/09/EN
- Cable shortening kit: SD00552P/00/A6
- Field Xpert: BA01211S/04/EN

Brief Operating Instructions

- Waterpilot FMX21 4 to 20 mA Analog: KA01244P/00/EN - Brief Operating Instructions for the device
- Waterpilot FMX21 4 to 20 mA HART: KA01189P/00/EN - Brief Operating Instructions for the device

Safety Instructions (XA)

Depending on the approval, the following Safety Instructions (XA) are supplied with the device. They are an integral part of the Operating Instructions.

Directive	Type of protection	Category	Documentation	Option [1]
ATEX	Ex ia IIC	II 2 G	XA00454P	BD
ATEX	Ex nA IIC	II 3 G	XA00485P	BE
IECEx	Ex ia IIC	n/a	XA00455P	IC
CSA C/US	Ex ia IIC	n/a	ZD00232P (960008976)	CE
FM	AEx ia IIC	n/a	ZD00231P (960008975)	FE
NEPSI	Ex ia IIC	n/a	XA00456P	NA
INMETRO	Ex ia IIC	n/a	XA01066P	MA

1) Product Configurator order code for "Approval"

The nameplate indicates the Safety Instructions (XA) that are relevant to the device.

Drinking water approval

- SD00289P/00/A3 (NSF)
- SD00319P/00/A3 (KTW)
- SD00320P/00/A3 (ACS)

Registered trademarks

GORE-TEX® Trademark of W.L. Gore & Associates, Inc., USA.

TEFLON® Trademark of E.I. Du Pont de Nemours & Co., Wilmington, USA.

HART® Registered trademark of the FieldComm Group, Austin, USA

FieldCare®	Trademark of Endress+Hauser Process Solutions AG.
DeviceCare®	Trademark of Endress+Hauser Process Solutions AG.
iTEMP®	Trademark of Endress+Hauser Wetzer GmbH + Co. KG, Nesselwang, D..



www.addresses.endress.com

Endress+Hauser

People for Process Automation

BA00380P/00/EN/18.18
71397579
2018-03-01

Valid as of version
01.00.zz

Operating Instructions
Waterpilot FMX21

Hydrostatic level measurement
4 to 20 mA HART

HART COMMUNICATION PROTOCOL

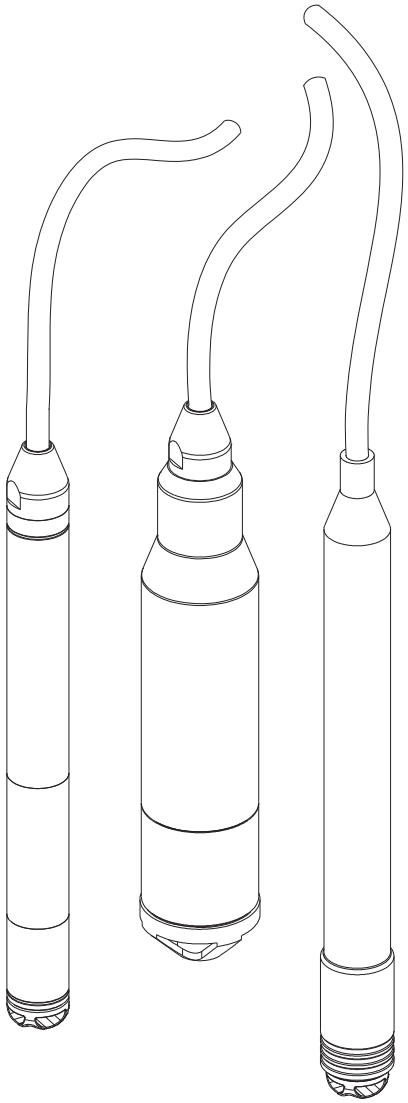

Endress+Hauser
People for Process Automation

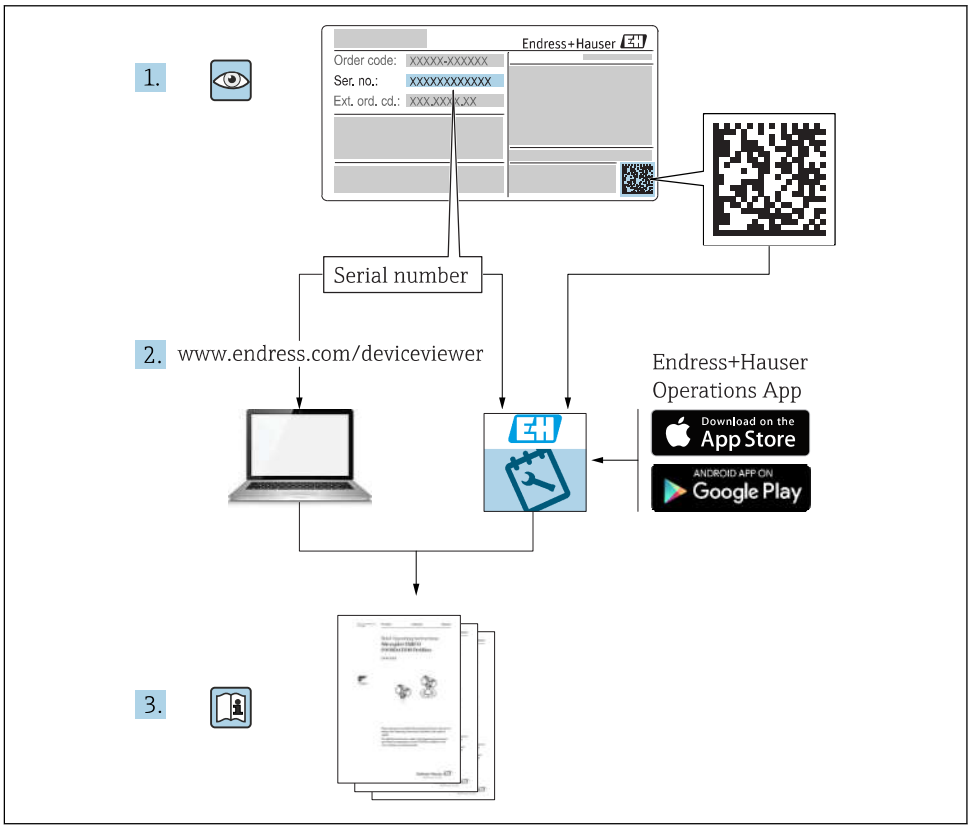

- Make sure the document is stored in a safe place such that it is always available when working on or with the device.
- To avoid danger to individuals or the facility, read the "Basic safety instructions" section carefully, as well as all other safety instructions in the document that are specific to working procedures.
- The manufacturer reserves the right to modify technical data without prior notice. Your Endress+Hauser distributor will supply you with current information and updates to these Instructions.

Table of contents

1 About this document 5
1.1 Document function 5
1.2 Symbols used 5
1.3 Registered trademarks 6
1.4 Supplementary documentation 7
1.5 Terms and abbreviations 8
1.6 Turn down calculation 9

2 Basic safety instructions 10
2.1 Requirements concerning the staff 10
2.2 Designated use 10
2.3 Workplace safety 10
2.4 Operational safety 10
2.5 Product safety 11

3 Product description 12
3.1 Function 12

4 Incoming acceptance and product identification 13
4.1 Incoming acceptance 13
4.2 Product identification 14
4.3 Nameplates 15
4.4 Identification of sensor type 16
4.5 Storage and transport 16
4.6 Scope of delivery 17

5 Installation 18
5.1 Installation conditions 18
5.2 Additional mounting instructions 19
5.3 Dimensions 19
5.4 Mounting the Waterpilot with a mounting clamp 20
5.5 Mounting the Waterpilot with a cable mounting screw 21
5.6 Mounting the terminal box 22
5.7 Mounting the TMT182 temperature head transmitter with terminal box 22
5.8 Mounting the terminal strip for the Pt100 passive (without TMT182) 23
5.9 Inserting the cable into the RIA15 field housing 24
5.10 Cable marking 24
5.11 Cable shortening kit 25
5.12 Post-installation check 25

6 Electrical connection 26
6.1 Connecting the device 26
6.2 Supply voltage 30
6.3 Cable specifications 30
6.4 Power consumption 30
6.5 Current consumption 31
6.6 Connecting the measuring unit 31
6.7 Post-connection check 35

7 Operation options 36
7.1 Overview of operating options 36
7.2 Operating concept 37
7.3 Structure of the operating menu 38
7.4 Locking/unlocking operation 38
7.5 Resetting to factory settings (reset) 39

8 Integrating device via HART® protocol 41
8.1 HART process variables and measured values 41
8.2 Device variables and measured values 42

9 Commissioning 43
9.1 Post-installation check and function check . . . 43
9.2 Unlocking/locking configuration 43
9.3 Commissioning 43
9.4 Measuring mode selection 43
9.5 For selecting the pressure engineering unit . . . 44
9.6 Position adjustment 44
9.7 Configuring the damping 45
9.8 Configuring pressure measurement 46
9.9 Configuring level measurement 48
9.10 Automatic density compensation 59
9.11 Linearization 62
9.12 Manual entry of a linearization table via operating tool 65
9.13 Backing up or duplicating the device data 66
9.14 Operation and settings via RIA15 66

10 Diagnostics and troubleshooting . . . 70
10.1 Troubleshooting 70
10.2 Diagnostic events in the operating tool 70
10.3 Troubleshooting specific to Waterpilot FMX21 with optional Pt100 74
10.4 Troubleshooting specific to TMT182 temperature head transmitter 74
10.5 Response of output to errors 75
10.6 Firmware history 75

11 Maintenance 76
11.1 Exterior cleaning 76

12 Repairs 77
12.1 General notes 77
12.2 Spare parts 77
12.3 Return 77

12.4 Disposal 77

13 Overview of the operating menu 78

13.1 Overview of parameters in the "Expert" menu 81

14 Description of device parameters . . . 86

14.1 Expert → System 86
14.2 Expert → System → Instrument info 87
14.3 Expert → System → Management 89
14.4 Expert → Measurement → Measuring mode . . 89
14.5 Expert → Measurement → Basic setup 90
14.6 Expert → Measurement → Pressure 92
14.7 Expert → Measurement → Level 94
14.8 Expert → Measurement → Linearization 99
14.9 Expert → Measurement → Sensor limits 102
14.10 Expert → Measurement → Sensor trim 103
14.11 Expert → Output → Current output 104
14.12 Expert→ Communication → HART config. . . . 108
14.13 Expert→ Communication → HART info 110
14.14 Expert→ Communication → HART output . . . 112
14.15 Expert→ Communication → HART input 115
14.16 Expert → Application 117
14.17 Expert → Diagnosis 118
14.18 Expert → Diagnosis → Diagnostic list 120
14.19 Expert → Diagnosis→ Event logbook 121
14.20 Expert → Diagnosis → Simulation 122

15 Accessories 124

15.1 Service-specific accessories 125

16 Technical data 126

16.1 Input 126
16.2 Output 129
16.3 Performance characteristics 132
16.4 Environment 134
16.5 Process 136
16.6 Additional technical data 137

Index 138

1 About this document

1.1 Document function

These Operating Instructions contain all the information that is required in various phases of the life cycle of the device: from product identification, incoming acceptance and storage, to mounting, connection, operation and commissioning through to troubleshooting, maintenance and disposal.

1.2 Symbols used

1.2.1 Safety symbols

Symbol	Meaning
DANGER	**DANGER!** This symbol alerts you to a dangerous situation. Failure to avoid this situation will result in serious or fatal injury.
WARNING	**WARNING!** This symbol alerts you to a dangerous situation. Failure to avoid this situation can result in serious or fatal injury.
CAUTION	**CAUTION!** This symbol alerts you to a dangerous situation. Failure to avoid this situation can result in minor or medium injury.
NOTICE	**NOTE!** This symbol contains information on procedures and other facts which do not result in personal injury.

1.2.2 Electrical symbols

Symbol	Meaning	Symbol	Meaning
⎓	Direct current	~	Alternating current
⎓ ~	Direct current and alternating current	⏚	**Ground connection** A grounded terminal which, as far as the operator is concerned, is grounded via a grounding system.
⏚	**Protective ground connection** A terminal which must be connected to ground prior to establishing any other connections.	⏚	**Equipotential connection** A connection that has to be connected to the plant grounding system: This may be a potential equalization line or a star grounding system depending on national or company codes of practice.

1.2.3 Tool symbols

Symbol	Meaning
 A0011220	Flat blade screwdriver
 A0011219	Phillips screwdriver

Symbol	Meaning
 A0011221	Allen key
 A0011222	Open-ended wrench

1.2.4 Symbols for certain types of information

Symbol	Meaning
	**Permitted** Procedures, processes or actions that are permitted.
	**Preferred** Procedures, processes or actions that are preferred.
	**Forbidden** Procedures, processes or actions that are forbidden.
	**Tip** Indicates additional information.
	Reference to documentation
	Reference to page
	Reference to graphic
1. , 2. , 3. …	Series of steps
	Result of a step
	Help in the event of a problem
	Visual inspection

1.2.5 Symbols in graphics

Symbol	Meaning
1, 2, 3 …	Item numbers
1. , 2. , 3. …	Series of steps
A, B, C, …	Views
A-A, B-B, C-C, …	Sections

1.3 Registered trademarks

1.3.1 GORE-TEX®

Trademark of W.L. Gore & Associates, Inc., USA.

1.3.2 TEFLON®

Trademark of E.I. Du Pont de Nemours & Co., Wilmington, USA.

1.3.3 HART®

Registered trademark of the FieldComm Group, Austin, USA

1.3.4 FieldCare®

Trademark of Endress+Hauser Process Solutions AG.

1.3.5 DeviceCare®

Trademark of Endress+Hauser Process Solutions AG.

1.3.6 iTEMP®

Trademark of Endress+Hauser Wetzer GmbH + Co. KG, Nesselwang, D..

1.4 Supplementary documentation

The document types listed are available:
In the Download Area of the Endress+Hauser Internet site: www.endress.com → Download

1.4.1 Technical Information (TI): planning aid for your device

Waterpilot: TI00431P

RIA15: TI01043K

The document contains all the technical data on the device and provides an overview of the accessories and other products that can be ordered for the device.

1.4.2 Brief Operating Instructions (KA): getting the 1st measured value quickly

FMX21 4 to 20 mA HART - KA01189P:

The Brief Operating Instructions contain all the essential information from incoming acceptance to initial commissioning.

1.4.3 Safety Instructions (XA)

Depending on the approval, the following Safety Instructions (XA) are supplied with the device. They are an integral part of the Operating Instructions.

Directive	Type of protection	Category	Documentation	Option [1)]
ATEX	Ex ia IIC	II 2 G	XA00454P	BD
ATEX	Ex nA IIC	II 3 G	XA00485P	BE
IECEx	Ex ia IIC	n/a	XA00455P	IC
CSA C/US	Ex ia IIC	n/a	ZD00232P (960008976)	CE
FM	AEx ia IIC	n/a	ZD00231P (960008975)	FE

Directive	Type of protection	Category	Documentation	Option [1]
NEPSI	Ex ia IIC	n/a	XA00456P	NA
INMETRO	Ex ia IIC	n/a	XA01066P	MA

1) Product Configurator order code for "Approval"

The nameplate indicates the Safety Instructions (XA) that are relevant to the device.

1.5 Terms and abbreviations

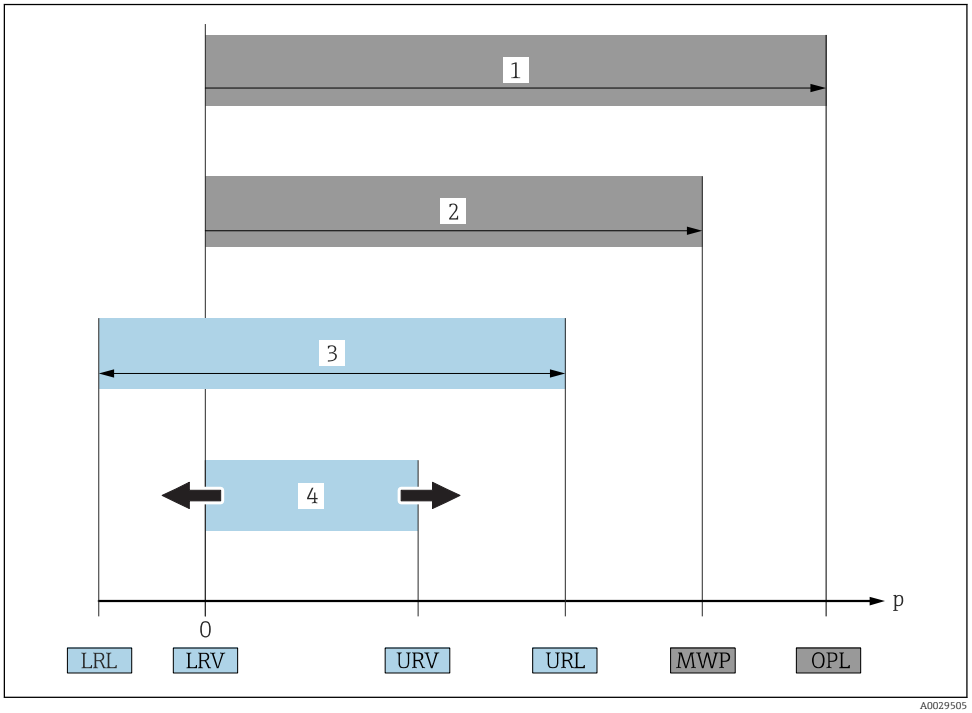

Item	Term/abbreviation	Explanation
1	OPL	The OPL (over pressure limit = sensor overload limit) for the measuring device depends on the lowest-rated element, with regard to pressure, of the selected components, i.e. the process connection has to be taken into consideration in addition to the measuring cell. Also observe pressure-temperature dependency. The OPL may only be applied for a limited period of time.
2	MWP	The MWP (maximum working pressure) for the sensors depends on the lowest-rated element, with regard to pressure, of the selected components, i.e. the process connection has to be taken into consideration in addition to the measuring cell. Also observe pressure-temperature dependency. The MWP may be applied at the device for an unlimited period. The MWP can also be found on the nameplate.
3	Maximum sensor measuring range	Span between LRL and URL This sensor measuring range is equivalent to the maximum calibratable/adjustable span.
4	Calibrated/adjusted span	Span between LRV and URV Factory setting: 0 to URL Other calibrated spans can be ordered as customized spans.
p	-	Pressure
-	LRL	Lower range limit
-	URL	Upper range limit
-	LRV	Lower range value

Item	Term/abbreviation	Explanation
-	URV	Upper range value
-	TD (turn down)	Turn down Example - see the following section.
-	PE	Polyethylene
-	FEP	Fluorinated ethylene propylene
-	PUR	Polyurethane

1.6 Turn down calculation

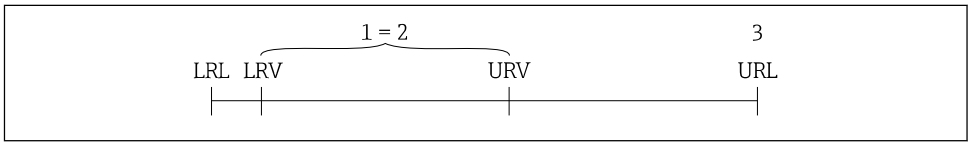

1 Calibrated/adjusted span
2 Zero point-based span
3 URL sensor

Example

- Sensor:10 bar (150 psi)
- Upper range value (URL) = 10 bar (150 psi)

Turn down (TD):

$$TD = \frac{URL}{|URV - LRV|}$$

$$TD = \frac{10\ bar\ (150\ psi)}{|5\ bar\ (75\ psi) - 0\ bar\ (0\ psi)|} = 2$$

In this example, the TD is 2:1.
This span is based on the zero point.

- Calibrated/adjusted span: 0 to 5 bar (0 to 75 psi)
- Lower range value (LRV) = 0 bar (0 psi)
- Upper range value (URV) = 5 bar (75 psi)

2 Basic safety instructions

2.1 Requirements concerning the staff

The personnel for installation, commissioning, diagnostics and maintenance must fulfill the following requirements:
- Trained, qualified specialists: must have a relevant qualification for this specific function and task
- Are authorized by the plant owner/operator
- Are familiar with federal/national regulations
- Before beginning work, the specialist staff must have read and understood the instructions in the Operating Instructions and supplementary documentation as well as in the certificates (depending on the application)
- Following instructions and basic conditions

The operating personnel must fulfill the following requirements:
- Being instructed and authorized according to the requirements of the task by the facility's owner-operator
- Following the instructions in these Operating Instructions

2.2 Designated use

2.2.1 Application and media

The Waterpilot FMX21 is a hydrostatic pressure sensor for measuring the level of fresh water, wastewater and salt water. The temperature is measured simultaneously in the case of sensor versions with a Pt100 resistance thermometer.

An optional temperature head transmitter converts the Pt100 signal to a 4 to 20 mA signal with superimposed digital communication protocol HART 6.0.

2.2.2 Incorrect use

The manufacturer is not liable for damage caused by improper or non-designated use.

Verification for borderline cases:
- For special fluids and fluids for cleaning, Endress+Hauser is glad to provide assistance in verifying the corrosion resistance of fluid-wetted materials, but does not accept any warranty or liability.

2.3 Workplace safety

For work on and with the device:
- Wear the required personal protective equipment according to federal/national regulations.
- Switch off the supply voltage before connecting the device.

2.4 Operational safety

Risk of injury!
- Operate the device in proper technical condition and fail-safe condition only.
- The operator is responsible for interference-free operation of the device.

Modifications to the device

Unauthorized modifications to the device are not permitted and can lead to unforeseeable dangers.
- If, despite this, modifications are required, consult with Endress+Hauser.

Repairs

To ensure continued operational safety and reliability,
- Carry out repairs on the device only if they are expressly permitted.
- Observe federal/national regulations pertaining to repair of an electrical device.
- Use original spare parts and accessories from Endress+Hauser only.

Hazardous area

To eliminate danger to persons or the facility when the device is used in the approval-related area (e.g. explosion protection, pressure vessel safety):
- Check the nameplate to verify if the device ordered can be put to its intended use in the approval-related area.
- Observe the specifications in the separate supplementary documentation that is an integral part of these Instructions.

2.5 Product safety

This measuring device is designed in accordance with good engineering practice to meet state-of-the-art safety requirements, has been tested, and left the factory in a condition in which it is safe to operate.

It meets general safety standards and legal requirements. It also complies with the EC directives listed in the device-specific EC Declaration of Conformity. Endress+Hauser confirms this by affixing the CE mark to the device.

3 Product description

3.1 Function

The ceramic measuring cell is a dry measuring cell i.e. the pressure acts directly on the robust, ceramic process isolating diaphragm of the Waterpilot FMX21. Changes in air pressure are guided via a pressure compensation tube through the extension cable to the rear of the ceramic process isolating diaphragm and are compensated for. A pressure-dependent change in capacitance, caused by the movement of the process isolating diaphragm, is measured at the electrodes of the ceramic carrier. The electronics unit then converts this to a signal that is proportional to the pressure and linear to the level.

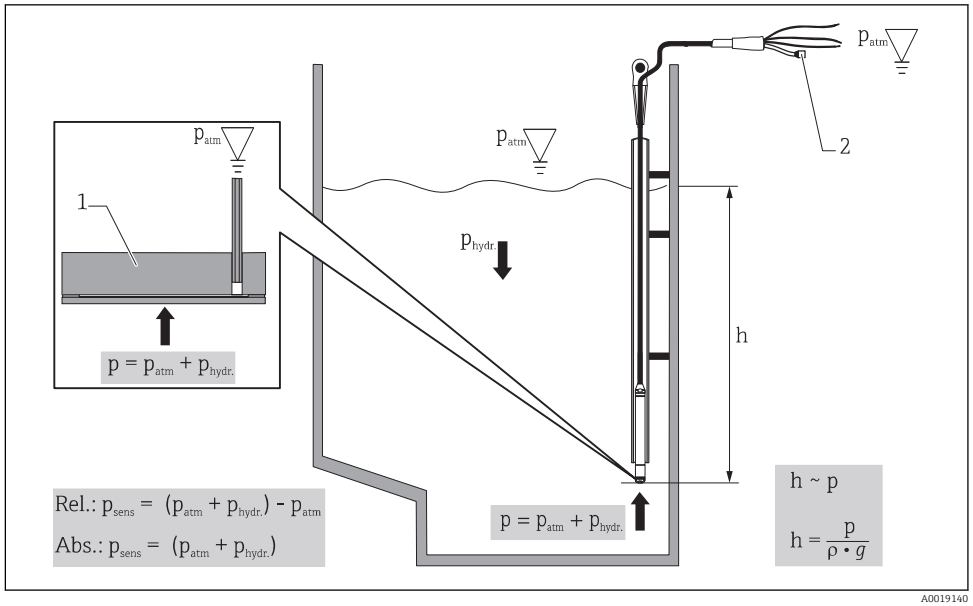

1 Ceramic measuring cell
2 Pressure compensation tube
h Height level
p Total pressure = atmospheric pressure + hydrostatic pressure
ρ Density of the medium
g Acceleration due to gravity
$P_{hydr.}$ *Hydrostatic pressure*
P_{atm} *Atmospheric pressure*
P_{sens} *Pressure displayed on the sensor*

4 Incoming acceptance and product identification

4.1 Incoming acceptance

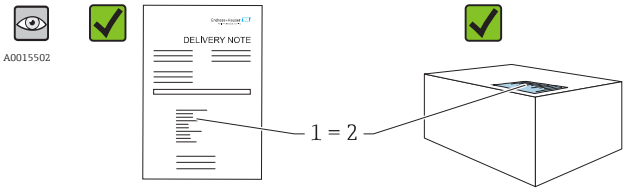

Is the order code on the delivery note (1) identical to the order code on the product sticker (2)?

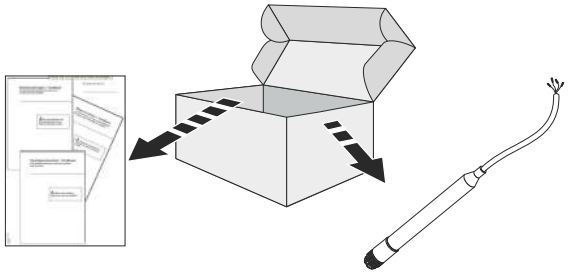

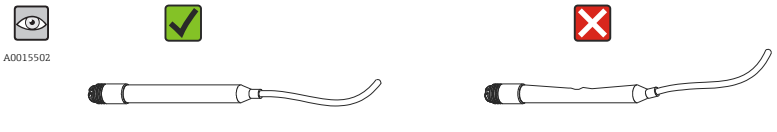

Are the goods undamaged?

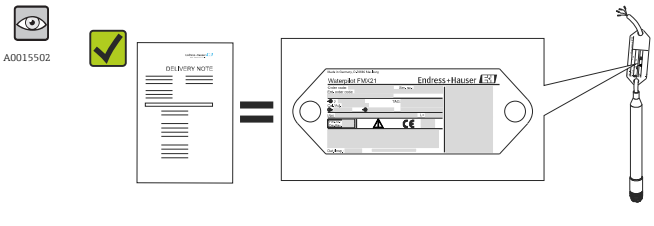

Do the data on the nameplate correspond to the order specifications and the delivery note?



Is the documentation available?
If required (see nameplate): Are the safety instructions (XA) present?

If one of these conditions does not apply, please contact your Endress+Hauser sales office.

4.2 Product identification

The following options are available for identification of the measuring device:
- Nameplate specifications
- Order code with breakdown of the device features on the delivery note
- Enter serial number of nameplates in *W@M Device Viewer* (www.endress.com/deviceviewer): All details on the measuring device are displayed.

For an overview of the technical documentation provided, enter the serial number from the nameplates in the *W@M Device Viewer* (www.endress.com/deviceviewer)

4.2.1 Manufacturer address

Endress+Hauser SE+Co. KG
Hauptstraße 1
79689 Maulburg, Germany

Address of the manufacturing plant: See nameplate.

4.3 Nameplates

4.3.1 Nameplates on extension cable

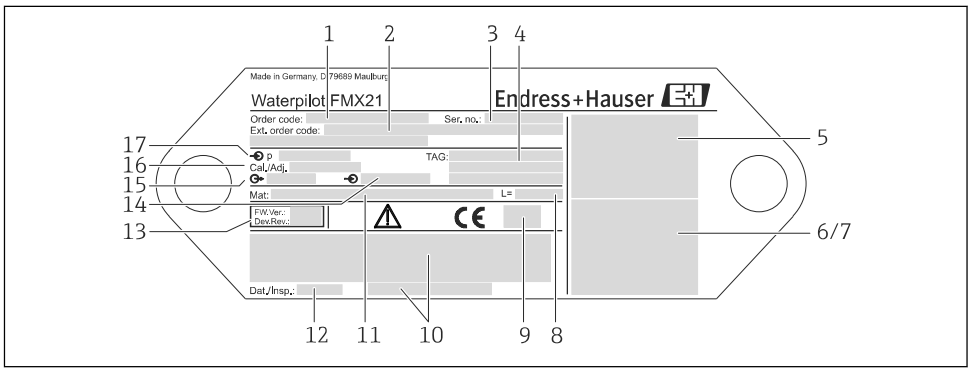

A0018802

1 *Order code (shortened for reordering); The meaning of the individual letters and digits is explained in the order confirmation details.*
2 *Extended order number (complete)*
3 *Serial number (for clear identification)*
4 *TAG (device tag)*
5 *FMX21 connection diagram*
6 *Pt100 connection diagram (optional)*
7 *Warning (hazardous area), (optional)*
8 *Length of extension cable*
9 *Approval symbol, e.g. CSA, FM, ATEX (optional)*
10 *Text for approval (optional)*
11 *Materials in contact with process*
12 *Test date (optional)*
13 *Software version/device version*
14 *Supply voltage*
15 *Output signal*
16 *Set measuring range*
17 *Nominal measuring range*

Additional nameplate for devices with approvals

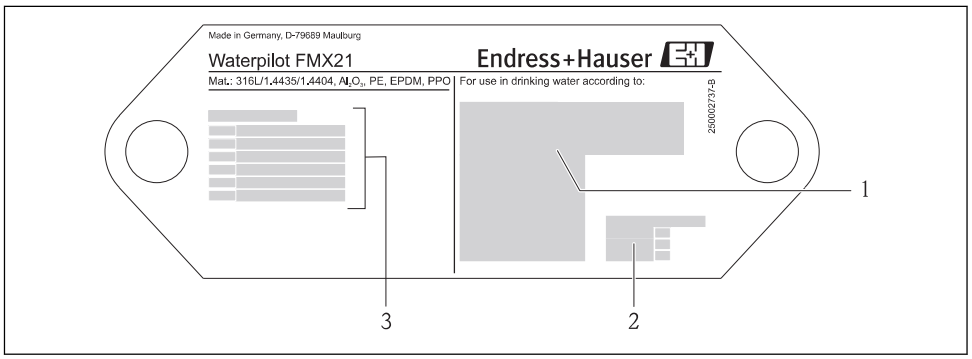

A0018805

1 *Approval symbol (drinking water approval)*
2 *Reference to associated documentation*
3 *Approval number (marine approval)*

4.3.2 Additional nameplate for devices with external diameter 22 mm (0.87 in) and 42 mm (1.65 in)

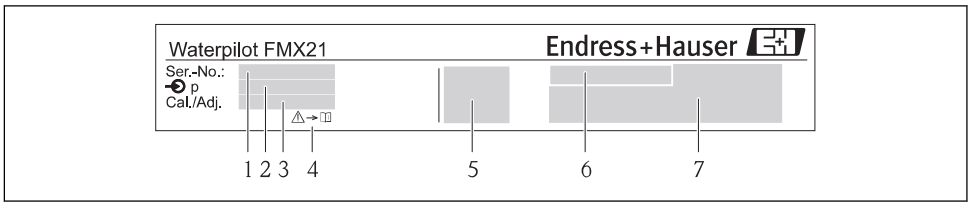

1 *Serial number*
2 *Nominal measuring range*
3 *Set measuring range*
4 *CE mark or approval symbol*
5 *Certificate number (optional)*
6 *Text for approval (optional)*
7 *Reference to documentation*

4.4 Identification of sensor type

With gauge pressure or absolute pressure sensors, the "Pos. zero adjust" parameter is displayed in the operating menu. With absolute pressure sensors, the "Calib. offset" parameter is displayed in the operating menu.

4.5 Storage and transport

4.5.1 Storage conditions

Use original packaging.

Store the measuring device in clean and dry conditions and protect from damage caused by shocks (EN 837-2).

Storage temperature range

FMX21 + Pt100 (optional)

−40 to +80 °C (−40 to +176 °F)

Cable

(when mounted in a fixed position)
- With PE: −30 to +70 °C (−22 to +158 °F)
- With FEP: −30 to +80 °C (−22 to +176 °F)
- With PUR: −40 to +80 °C (−40 to +176 °F)

Terminal box

−40 to +80 °C (−40 to +176 °F)

TMT182 temperature head transmitter (optional) for FMX21 4 to 20 mA HART

−40 to +100 °C (−40 to +212 °F)

4.5.2 Transporting the product to the measuring point

⚠ WARNING

Incorrect transport!

Device or cable may become damaged, and there is a risk of injury!

- ▶ Transport measuring device in the original packaging.
- ▶ Follow the safety instructions and transport conditions for devices weighing more than 18 kg (39.6 lbs).

4.6 Scope of delivery

The scope of delivery comprises:

- Waterpilot FMX21, optionally with integrated Pt100 resistance thermometer
- Optional accessories

Documentation supplied:

- The Operating Instructions BA00380P are available on the internet. → see: www.de.endress.com → Downloads.
- Brief Operating Instructions KA01189P
- Final inspection report
- Drinking water approvals (optional): SD00289P, SD00319P, SD00320P
- Devices that are suitable for use in hazardous areas: Additional documentation e.g. Safety instructions (XA, ZD)

5 Installation

5.1 Installation conditions

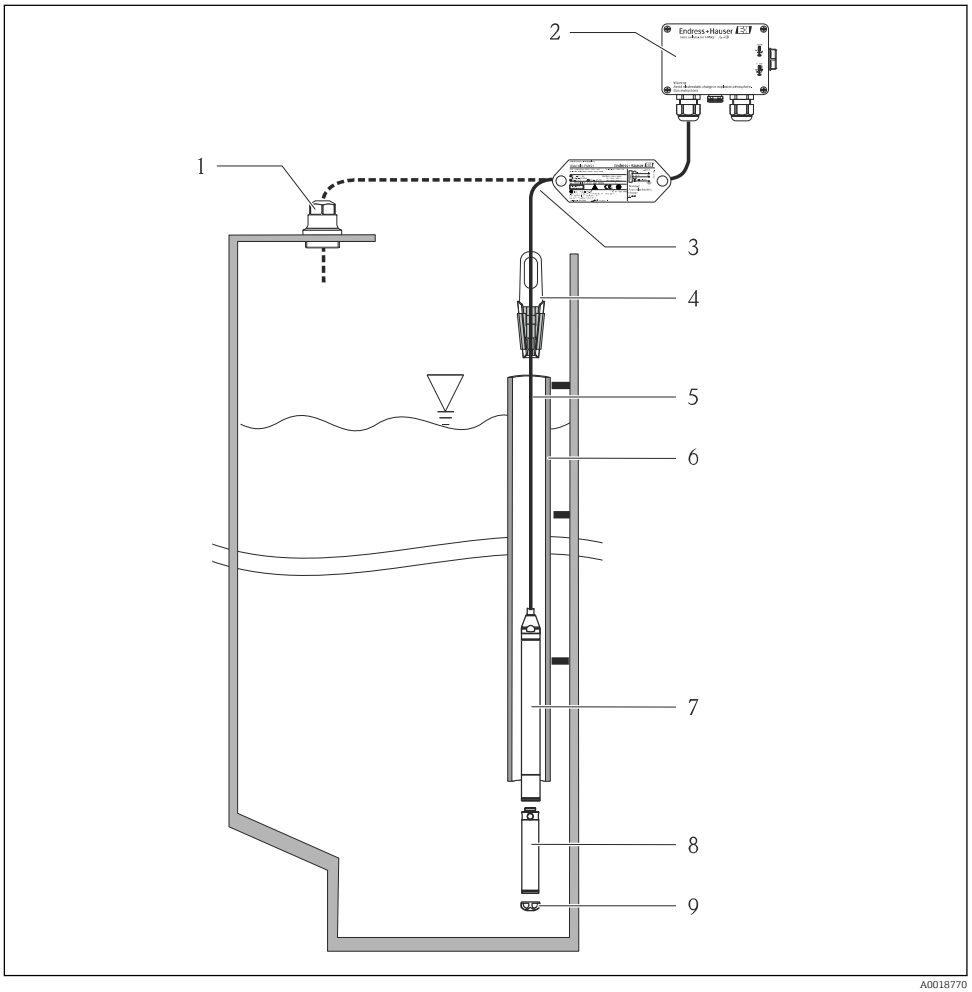

1 *Cable mounting screw (can be ordered as an accessory)*
2 *Terminal box (can be ordered as an accessory)*
3 *Bending radius of extension cable > 120 mm (4.72 in)*
4 *Mounting clamp (can be ordered as an accessory)*
5 *Extension cable*
6 *Guide tube*
7 *Waterpilot FMX21*
8 *Additional weight can be ordered as an accessory for the FMX21 with external diameter of 22 mm (0.87 in) and 29 mm (1.14 in)*
9 *Protection cap*

5.2 Additional mounting instructions

- Cable length
  - Customer-specific in meters or feet.
  - Limited cable length when performing installation with freely suspended device with cable mounting screw or mounting clamp, as well as for FM/CSA approval: max. 300 m (984 ft).
- Sideways movement of the level probe can result in measuring errors. For this reason, install the probe at a point free from flow and turbulence, or use a guide tube. The internal diameter of the guide tube should be at least 1 mm (0.04 in) greater than the external diameter of the selected FMX21.
- To avoid mechanical damage to the measuring cell, the device is equipped with a protection cap.
- The cable must end in a dry room or a suitable terminal box. The terminal box from Endress+Hauser provides humidity and climatic protection and is suitable for installation outdoors → 🖹 124.
- Cable length tolerance: < 5 m (16 ft): ±17.5 mm (0.69 in); > 5 m (16 ft): ±0.2 %
- If the cable is shortened, the filter at the pressure compensation tube must be reattached. Endress+Hauser offers a cable shortening kit for this purpose → 🖹 124 (documentation SD00552P/00/A6).
- Endress+Hauser recommends using twisted, shielded cable.
- In shipbuilding applications, measures are required to restrict the spread of fire along cable looms.
- The length of the extension cable depends on the intended level zero point. The height of the protection cap must be taken into consideration when designing the layout of the measuring point. The level zero point (E) corresponds to the position of the process isolating diaphragm. Level zero point = E; tip of probe = L (see the following diagram).

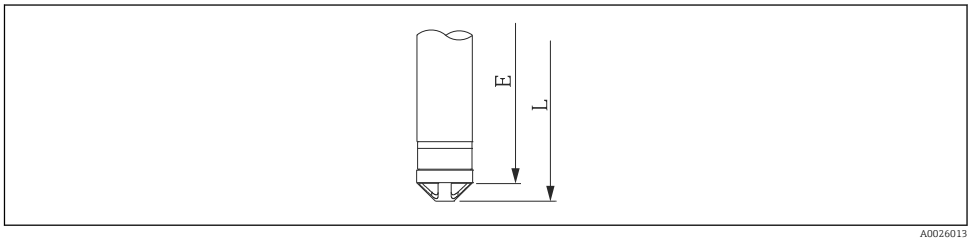

A0026013

5.3 Dimensions

For dimensions, please refer to the Technical Information TI00431P/00/EN, "Mechanical construction" section (see also: www.de.endress.com → Downloads → Media Type: Documentation).

5.4 Mounting the Waterpilot with a mounting clamp

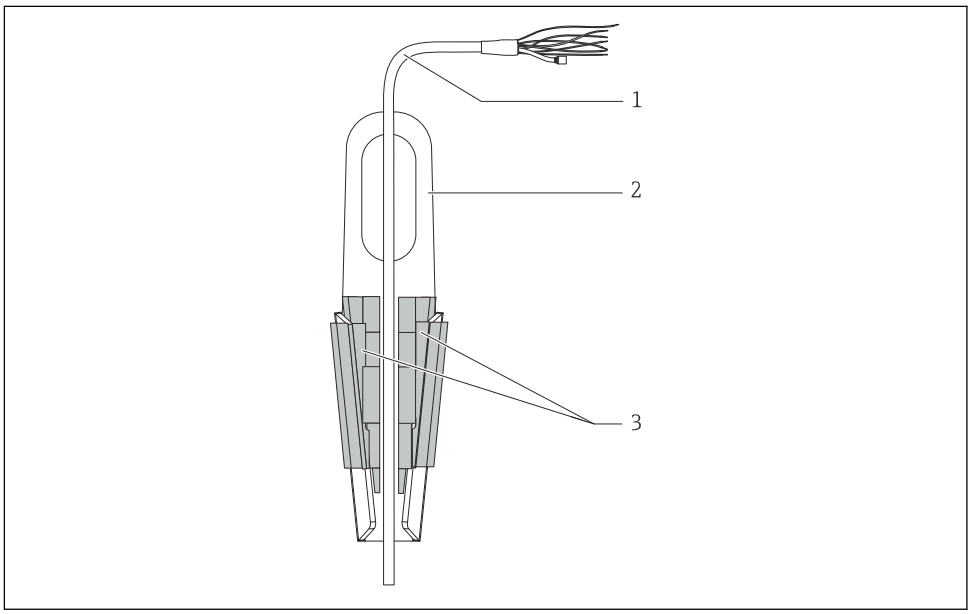

1 Extension cable
2 Suspension clamp
3 Clamping jaws

5.4.1 Mounting the suspension clamp:

1. Mount the suspension clamp (item 2). Take the weight of the extension cable (item 1) and the device into account when selecting the fastening point.
2. Push up the clamping jaws (item 3). Place the extension cable (item 1) between the clamping jaws as shown in the graphic.
3. Hold the extension cable (item 1) in position and push the clamping jaws (item 3) back down. Tap the clamping jaws gently from above to fix them in place.

5.5 Mounting the Waterpilot with a cable mounting screw

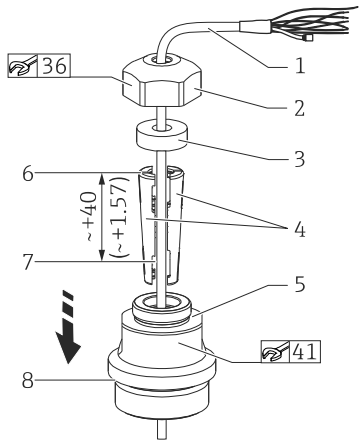

1 *Extension cable*
2 *Cover for cable mounting screw*
3 *Sealing ring*
4 *Clamping sleeves*
5 *Adapter for cable mounting screw*
6 *Top edge of clamping sleeve*
7 *Desired length of extension cable and Waterpilot probe prior to assembly*
8 *After assembly, item 7 is located next to the mounting screw with G 1½" thread: height of sealing surface of the adapter or NPT 1½" thread height of thread run-out of adapter*

Engineering unit mm (in). Illustrated with G 1½" thread.

If you want to lower the level probe to a certain depth, position the top edge of the clamping sleeve 40 mm (4.57 in) higher than the required depth. Then push the extension cable and the clamping sleeve into the adapter as described in Step 6 in the following section.

5.5.1 Mounting the cable mounting screw with a G 1½" or NPT 1½" thread:

1. Mark the desired length of extension cable on the extension cable.
2. Insert the probe through the measuring aperture and carefully lower on the extension cable. Fix the extension cable to prevent it from slipping.
3. Slide the adapter (item 5) over the extension cable and screw it tightly into the measuring aperture.
4. Slide the sealing ring (item 3) and cover (item 2) onto the cable from above. Press the sealing ring into the cover.
5. Place the clamping sleeves (item 4) around the extension cable (item 1) at the marked point as illustrated in the graphic.
6. Slide the extension cable with the clamping sleeves (item 4) into the adapter (item 5)
7. Fit the cover (item 2) with the sealing ring (item 3) onto the adapter (item 5) and securely screw together with the adapter.

To remove the cable mounting screw, perform this sequence of steps in reverse.

⚠ CAUTION

Risk of injury!

▶ Use only in unpressurized vessels.

5.6 Mounting the terminal box

The optional terminal box is mounted using four screws (M4). For the dimensions of the terminal box, please see the Technical Information TI00431P/00/ EN, "Mechanical construction" section (see also: www.de.endress.com → Downloads → Media Type: Documentation).

5.7 Mounting the TMT182 temperature head transmitter with terminal box

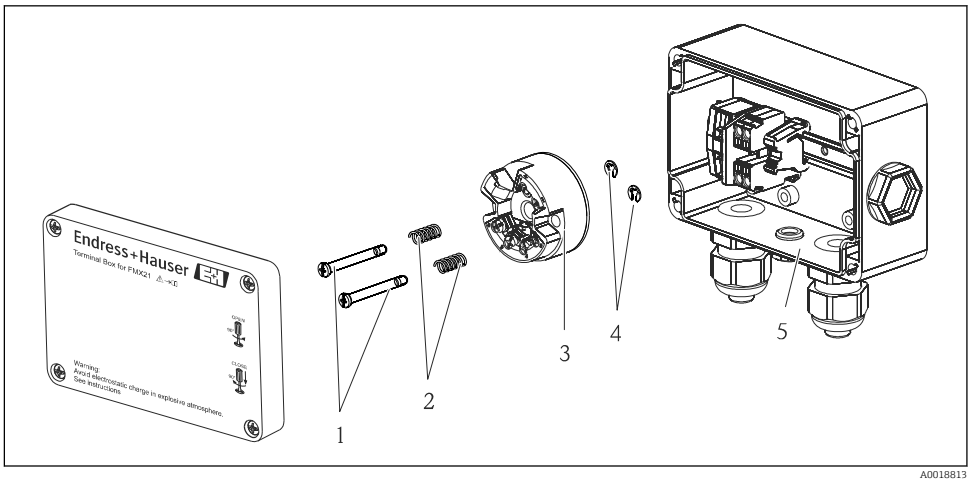

1 *Mounting screws*
2 *Mounting springs*
3 *TMT182 temperature head transmitter*
4 *Circlips*
5 *Terminal box*

Only open the terminal box with a screwdriver.

⚠ WARNING

Risk of explosion!

▶ The TMT182 is not designed for use in hazardous areas.

5.7.1 Mounting the temperature head transmitter:

1. Guide the mounting screws (item 1) with the mounting springs (item 2) through the bore of the temperature head transmitter (item 3)
2. Secure the mounting screws with the circlips (item 4). Circlips, mounting screws and springs are included in the scope of delivery for the temperature head transmitter.
3. Screw the temperature head transmitter into the field housing tightly. (Width of screwdriver blade max. 6 mm (0.24 in))

NOTICE

Avoid damage to the temperature head transmitter.

▶ Do not overtighten the mounting screw.

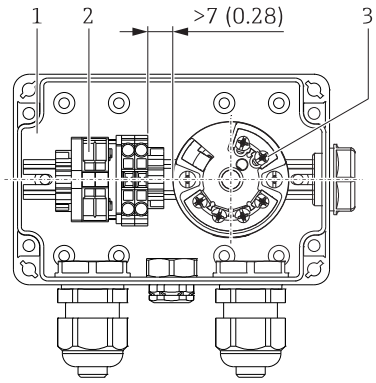

1 Terminal box
2 Terminal strip
3 TMT182 temperature head transmitter

Engineering unit mm (in)

NOTICE

Incorrect connection!

- A distance of >7 mm (> 0.28) must be maintained between the terminal strip and the TMT182 temperature head transmitter.

5.8 Mounting the terminal strip for the Pt100 passive (without TMT182)

If the FMX21 with optional Pt100 is supplied without the optional TMT182 temperature head transmitter, a terminal strip is provided with the terminal box for the purpose of wiring the Pt100.

⚠ WARNING

Risk of explosion!

- The Pt100, as well as the terminal strip, are not designed for use in hazardous areas.

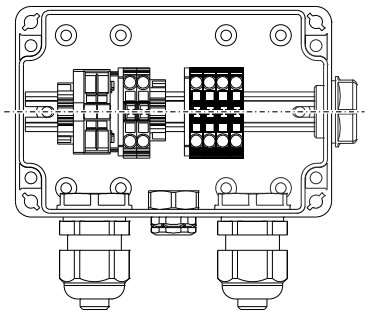

5.9 Inserting the cable into the RIA15 field housing

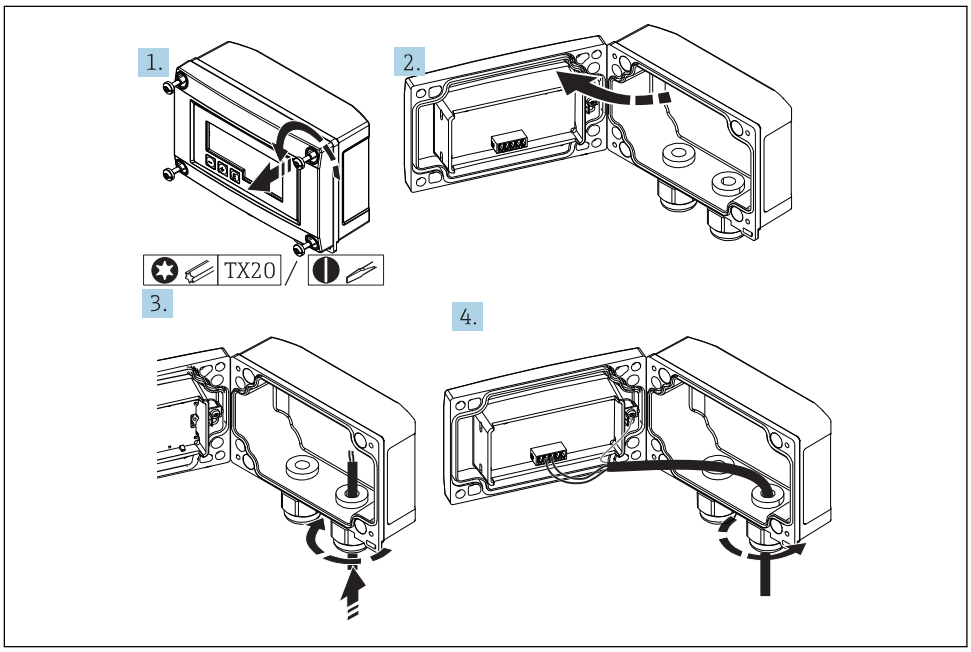

A0017830

Inserting the cable, field housing, connection without transmitter power supply (example)

1. Release the housing screws
2. Open the housing
3. Open the cable gland (M16) and insert the cable
4. Connect the cable including the functional grounding and close the cable gland

Compensation of the atmospheric pressure must be ensured for the installation. A black, vented cable gland is supplied for this purpose.

If using the communication resistor module in the RIA15, the cable of the FMX21 must be inserted into the right gland when connecting the FMX21 so that the integrated pressure compensation tube is not pinched.

5.10 Cable marking

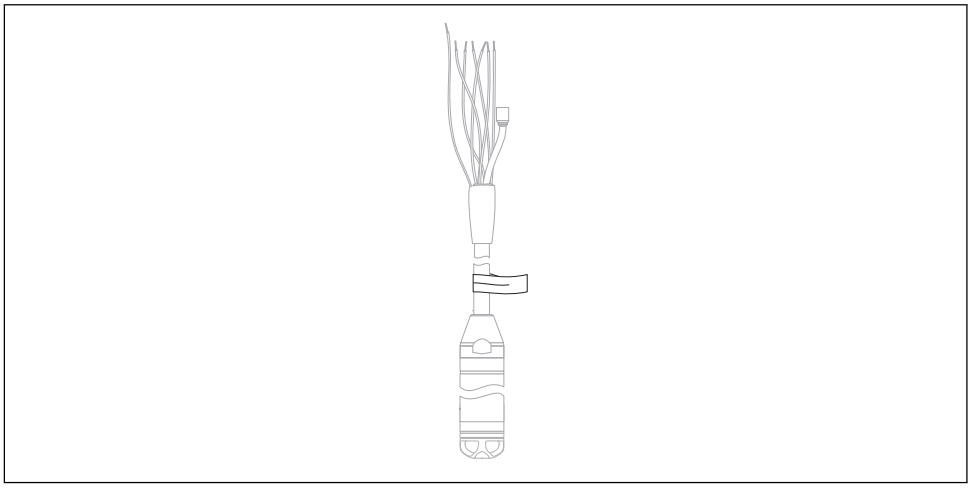

A0030955

- To make installation easier, Endress+Hauser marks the extension cable if a customer-specific length has been ordered.
  Ordering information: Product Configurator order code for "Service", option "IR" or "IS".
- Cable marking tolerance (distance to lower end of level probe):
  Cable length < 5 m (16 ft): ±17.5 mm (0.69 in)
  Cable length > 5 m (16 ft): ±0.2 %
- Material: PET, stick-on label: acrylic
- Immunity to temperature change: −30 to +100 °C (−22 to +212 °F)

NOTICE

The marking is used exclusively for installation purposes.

▶ The mark must be thoroughly removed without trace in the case of devices with drinking water approval. The extension cable must not be damaged in the process.

Not for use of the FMX21 in hazardous areas.

5.11 Cable shortening kit

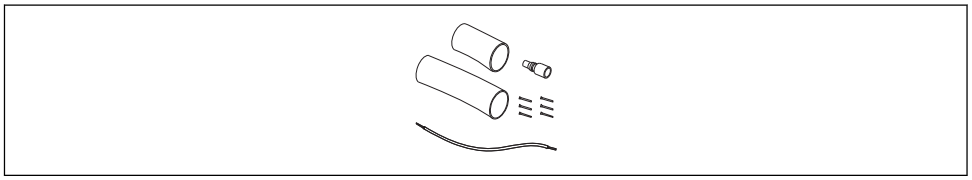

A0030948

The cable shortening kit is used to shorten a cable easily and professionally.

The cable shortening kit is not designed for the FMX21 with FM/CSA approval.

- Ordering information: Product Configurator order code for "Accessories enclosed", option "PW"
- Associated documentation SD00552P/00/A6.

5.12 Post-installation check

❑	Is the device undamaged (visual inspection)?
❑	Does the device conform to the measuring point specifications? For example: ▪ Process temperature ▪ Process pressure ▪ Ambient temperature ▪ Measuring range
❑	Are the measuring point identification and labeling correct (visual inspection)?
❑	Check that all screws are firmly seated.

6 Electrical connection

WARNING

Electrical safety is compromised by an incorrect connection!

- When using the measuring device in a hazardous area, the relevant national standards and guidelines as well as the Safety Instructions (XAs) or installation or control drawings (ZDs) must be adhered to. All data relating to explosion protection can be found in separate documentation which is available on request. This documentation is supplied with the devices as standard → 7

6.1 Connecting the device

WARNING

Electrical safety is compromised by an incorrect connection!

- The supply voltage must match the supply voltage specified on the nameplate → 15
- Switch off the supply voltage before connecting the device.
- The cable must end in a dry room or a suitable terminal box. The IP66/IP67 terminal box with GORE-TEX® filter from Endress+Hauser is suitable for outdoor installation.→ 22
- Connect the device in accordance with the following diagrams. Reverse polarity protection is integrated in the Waterpilot FMX21 and the temperature head transmitter. Changing the polarities will not result in the destruction of the devices.
- A suitable circuit breaker should be provided for the device in accordance with IEC/EN 61010.

6.1.1 Waterpilot with Pt100

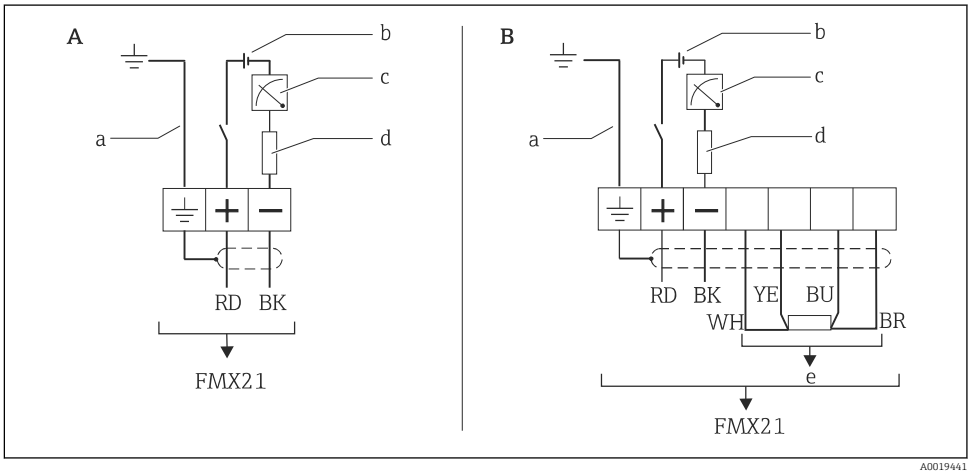

A Waterpilot FMX21
B Waterpilot FMX21 with Pt100 (not for use in hazardous areas); option "NB", Product Configurator order code for "Accessories"
a Not for the FMX21 with external diameter of 29 mm (1.14 in)
b 10.5 to 30 V DC (hazardous area), 10.5 to 35 V DC
c 4...20 mA
d Resistance (R_L)
e Pt100

6.1.2 Waterpilot with Pt100 and TMT182 temperature head transmitter for FMX21 4 to 20 mA HART

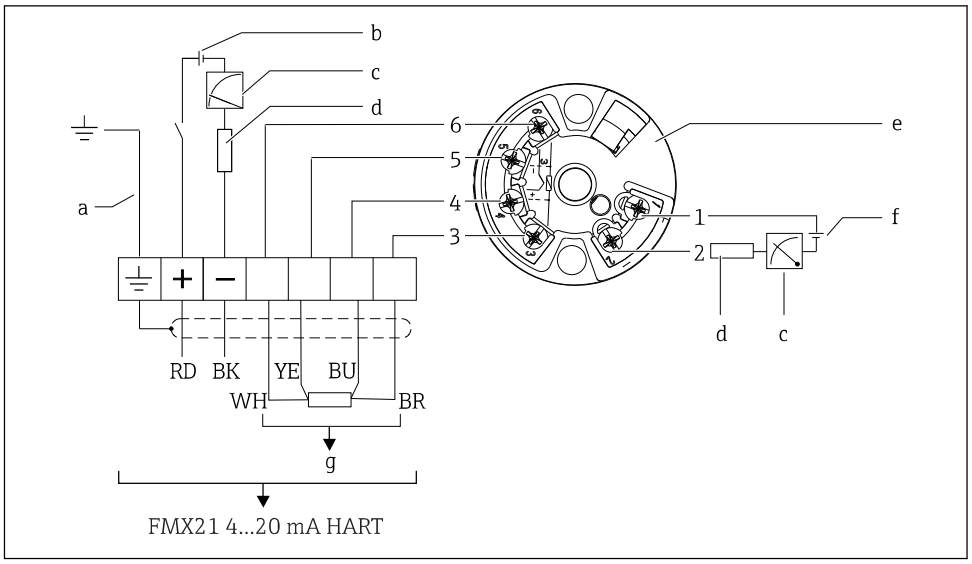

a Not for the FMX21 with external diameter of 29 mm (1.14 in)
b 10.5 to 35 V DC
c 4...20 mA
d Resistance (R_L)
e TMT182 temperature head transmitter (4 to 20 mA) (not for use in hazardous areas)
f 11.5 to 35 V DC
g Pt100
1...6 Pin assignment

Ordering information:

Pt100: Product Configurator order code for "Accessories mounted", option "NB"

TMT182: Product Configurator order code for "Accessories enclosed", option "PT"

6.1.3 Waterpilot FMX21 with RIA15

The RIA15 remote display can be ordered together with the device.

Product structure, feature 620 "Accessory enclosed":
- Option R4 "Remote display RIA15 non-hazardous area, field housing"
- Option R5 "Remote display RIA15 Ex= explosion protection approval, field housing"

Compensation of the atmospheric pressure must be ensured for the installation. A black, vented cable gland is supplied for this purpose.

The RIA15 process display unit is loop-powered and does not require any external power supply.

The voltage drop to be taken into account is:
- ≤1 V in the standard version with 4 to 20 mA communication
- ≤1.9 V with HART communication
- and an additional 2.9 V if display light is used

	Circuit diagram / Description
Waterpilot FMX21 connection, HART communication and RIA15 **without** backlight	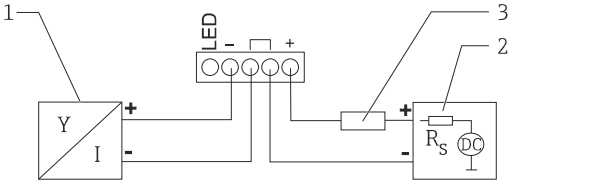 *1 Waterpilot FMX21 block diagram, HART with RIA15 process display unit without light* *1 Waterpilot FMX21* *2 Power supply* *3 HART resistance*
Waterpilot FMX21 connection, HART communication and RIA15 **with** backlight	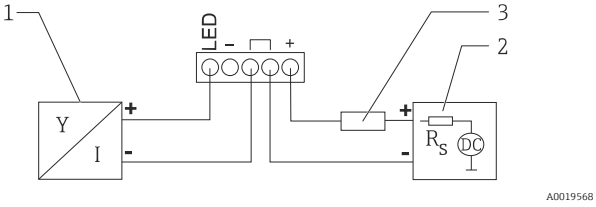 *2 Waterpilot FMX21 block diagram, HART with RIA15 process display unit with light* *1 Waterpilot FMX21* *2 Power supply* *3 HART resistance*

6.1.4 Waterpilot FMX21, RIA15 with installed HART communication resistor module

The HART communication module for installation in the RIA15 can be ordered together with the device.

Product structure, feature 620 "Accessory enclosed":
- Option R6 "HART communication resistor hazardous / non-hazardous area"
- The **voltage drop** to be taken into account is max. **7 V**

Compensation of the atmospheric pressure must be ensured for the installation. A black, vented cable gland is supplied for this purpose.

	Circuit diagram / Description
Waterpilot FMX21 connection and RIA15 **without** backlight	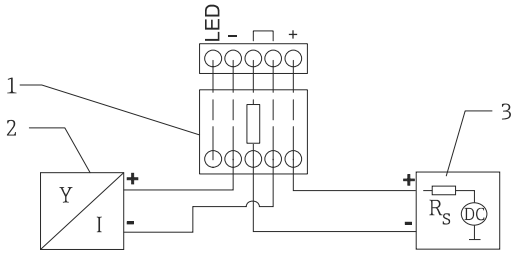 3 *Waterpilot FMX21 block diagram, RIA15 without light, HART communication resistor module* *1 HART communication resistor module* *2 Waterpilot FMX21* *3 Power supply*
Waterpilot FMX21 connection and RIA15 **with** backlight	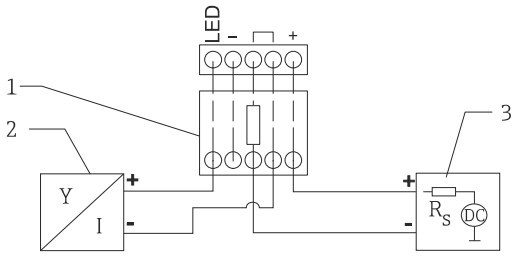 4 *Waterpilot FMX21 block diagram, RIA15 with light, HART communication resistor module* *1 HART communication resistor module* *2 Waterpilot FMX21* *3 Power supply*

6.1.5 Wire colors

RD = red, BK = black, WH = white, YE = yellow, BU = blue, BR = brown

6.1.6 Connection data

Connection classification as per IEC 61010-1:
- Overvoltage category 1
- Pollution level 1

Connection data in the hazardous area

See relevant XA.

6.2 Supply voltage

WARNING

Supply voltage might be connected!
Risk of electric shock and/or explosion!

- When using the measuring device in hazardous areas, installation must comply with the corresponding national standards and regulations as well as the Safety Instructions.
- All explosion protection data are given in separate documentation which is available upon request. The Ex documentation is supplied as standard with all devices approved for use in explosion hazardous areas.

6.2.1 FMX21 + Pt100 (optional)

- 10.5 to 35 V (not hazardous areas)
- 10.5 to 30 V (hazardous areas)

6.2.2 TMT182 temperature head transmitter (optional) for FMX21 4 to 20 mA HART

11.5 to 35 V DC

6.3 Cable specifications

Endress+Hauser recommends using shielded, twisted-pair two-wire cables.

The probe cables are shielded for device versions with outer diameters of 22 mm (0.87 in) and 42 mm (1.65 in).

6.3.1 FMX21 + Pt100 (optional)

- Commercially available instrument cable
- Terminals, terminal box: 0.08 to 2.5 mm^2 (28 to 14 AWG)

6.3.2 TMT182 temperature head transmitter (optional) for FMX21 4 to 20 mA HART

- Commercially available instrument cable
- Terminals, terminal box: 0.08 to 2.5 mm^2 (28 to 14 AWG)
- Transmitter connection: max. 1.75 mm^2 (15 AWG)

6.4 Power consumption

6.4.1 FMX21 + Pt100 (optional)

- ≤ 0.805 W at 35 V DC (non-hazardous area)
- ≤ 0.690 W at 30 V DC (hazardous area)

6.4.2 TMT182 temperature head transmitter (optional) for FMX21 4 to 20 mA HART

≤ 0.805 W at 35 V DC

6.5 Current consumption

6.5.1 FMX21 + Pt100 (optional)

Max. current consumption: ≤ 23 mA
Min. current consumption: ≥ 3.6 mA

6.5.2 TMT182 temperature head transmitter (optional) for FMX21 4 to 20 mA HART

- Max. current consumption: ≤ 23 mA
- Min. current consumption: ≥ 3.5 mA

6.6 Connecting the measuring unit

6.6.1 Overvoltage protection

To protect the Waterpilot and the TMT182 temperature head transmitter from large interference voltage peaks, Endress+Hauser recommends installing overvoltage protection upstream and downstream of the display and/or evaluation unit as shown in the graphic.

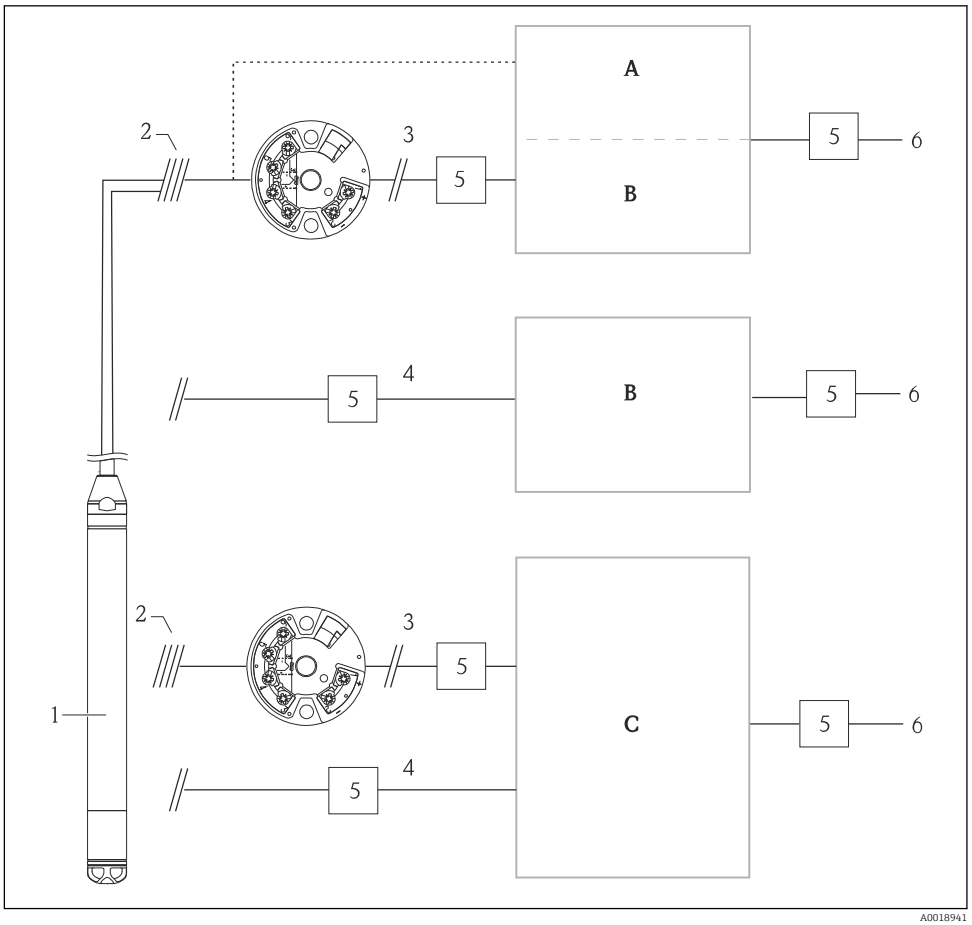

A Power supply, display and evaluation unit with one input for Pt100
B Power supply, display and evaluation unit with one input for 4 to 20 mA
C Power supply, display and evaluation unit with two inputs for 4 to 20 mA
1 Waterpilot FMX21 HART
2 Connection for integrated Pt100 in the FMX21
3 4 to 20 mA HART (temperature)
4 4 to 20 mA HART (level)
5 Overvoltage protection, e.g. HAW from Endress+Hauser (not for use in hazardous areas.)
6 Power supply

Further information on the TMT182 temperature head transmitter for HART applications from Endress+Hauser can be found in the Technical Information TI00078R/09/EN.

6.6.2 Connecting the Commubox FXA195

The Commubox FXA195 connects transmitters with the HART protocol to the USB interface of a computer. This enables remote operation of the transmitter using the Endress+Hauser operating program FieldCare/DeviceCare. Power is supplied to the Commubox via the USB port. The Commubox is also suitable for connecting to intrinsically safe circuits. For further information, see the Technical Information TI00404F/00/EN.

6.6.3 Connecting the Field Xpert SFX

Compact, flexible and robust industrial handheld terminal for remote configuration and for obtaining measured values via the HART current output (4 to 20 mA). For details, see Operating Instructions BA00060S/04/EN.

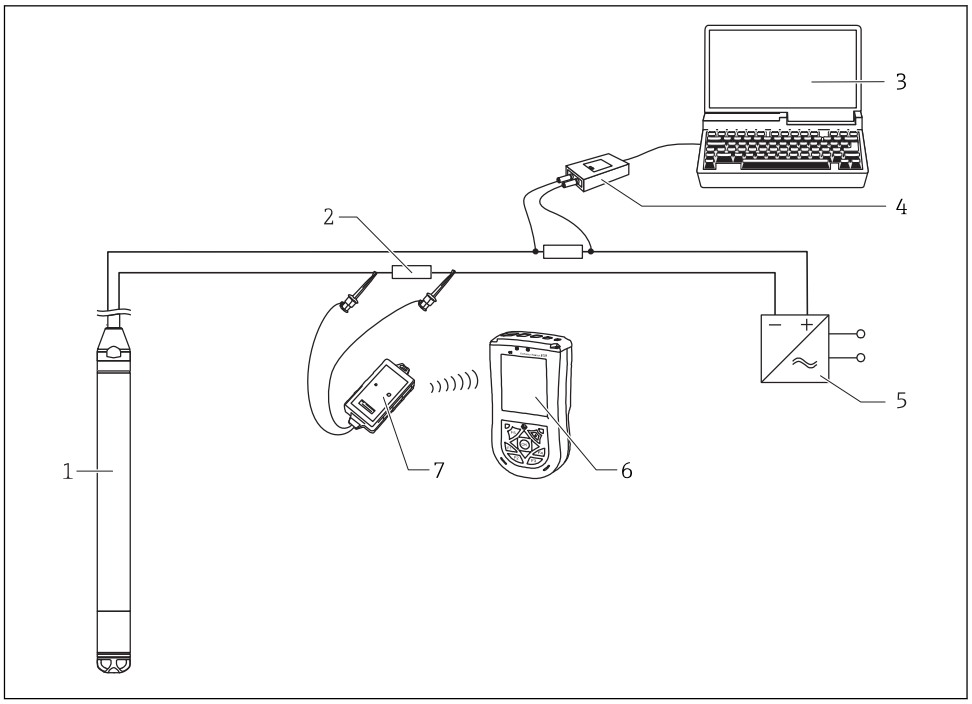

1 *Waterpilot FMX21*
2 *Required communication resistor ≥ 250 Ω*
3 *Computer with operating tool (e.g. FieldCare)*
4 *Commubox FXA195 (USB)*
5 *Transmitter power supply unit, e.g. RN221N (with communication resistor)*
6 *Field Xpert SFX*
7 *VIATOR Bluetooth modem with connecting cable*

Only use certified operating devices in hazardous area!

WARNING

Risk of explosion!

- Do not change the battery of the handheld terminal in the hazardous area.
- When using the measuring device in hazardous areas, installation must comply with the corresponding national standards and regulations and the Safety Instructions (XAs) or the Installation or Control Drawings (ZDs).

6.6.4 Connecting for air pressure compensation with external measured value

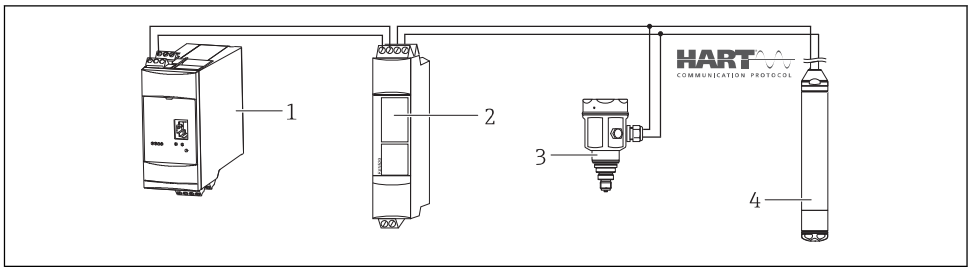

1 *Fieldgate FXA520*
2 *Multidrop Connector FXN520*
3 *Cerabar*
4 *Waterpilot FMX21*

For applications in which condensation may occur, the use of an absolute pressure probe is recommended. For level measurement using an absolute pressure probe, the measured value is affected by fluctuations in the ambient air pressure. To correct the resulting measured error, you can connect an external absolute pressure sensor (e.g. Cerabar) to the HART signal line, switch the Waterpilot to burst mode and operate the Cerabar in the "Electr. Delta P" mode.

When you switch on the "Electr. Delta P" application, the external absolute pressure sensor calculates the difference between the two pressure signals and can thus determine the level precisely. Only one level measured value can be corrected in this way.

For additional information, see → 57.

If using intrinsically safe devices, the regulations which apply to interconnecting intrinsically safe circuits as outlined in IEC 60079-14 (proof of intrinsic safety) must be observed.

6.6.5 Connecting an external temperature sensor/temperature head transmitter for density compensation

The Waterpilot FMX21 can correct measured errors that result from fluctuations in the density of the water caused by temperature. Users can choose from the following options:

Use the internally measured sensor temperature of the FMX21

The internally measured sensor temperature is calculated in the Waterpilot FMX21 for density compensation. The level signal is thus corrected according to the density characteristic line of water.

Use the optional internal Pt100 temperature sensor for density compensation in a suitable HART master (e.g. PLC)

The Waterpilot FMX21 is available with an optional Pt100 temperature sensor. Endress +Hauser additionally offers the TMT182 temperature head transmitter to convert the Pt100 signal to a 4 to 20 mA HART signal. The temperature and pressure signal is queried by a HART master (e.g. PLC), where a corrected level value can be generated using a stored linearization table or density function (of a chosen medium).

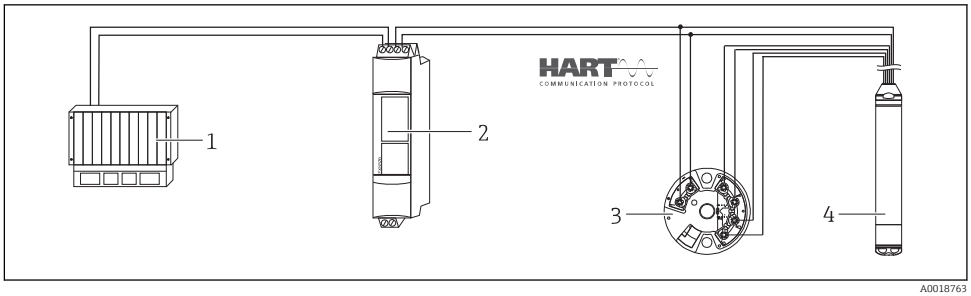

A0018763

1 *HART master, e.g. PLC (programmable logic controller)*
2 *Multidrop Connector FXN520*
3 *TMT182 temperature head transmitter*
4 *Waterpilot FMX21*

Use an external temperature signal which is transmitted to the FMX21 via HART burst mode

The Waterpilot FMX21 is available with an optional Pt100 temperature sensor. With this option, the signal of the Pt100 is evaluated with a HART-compliant temperature head transmitter (min. HART 5.0) that supports the burst mode. The temperature signal can

thus be transmitted to the FMX21. The FMX21 uses this signal for density correction of the level signal.

The TMT182 temperature head transmitter is not suitable for this configuration.

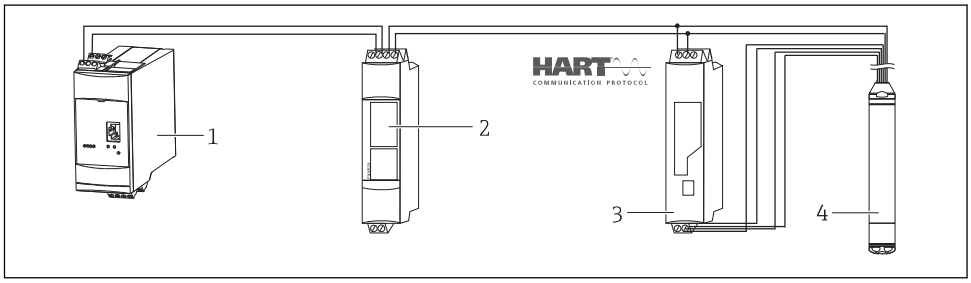

1 Fieldgate FXA520
2 Multidrop Connector FXN520
3 HART-compatible temperature transmitter (e.g. TMT82)
4 Waterpilot FMX21

Without additional compensation due to the anomaly of water, errors of up to 4% may occur at a temperature of +70 °C (+158 °F), for example. With density compensation, this error can be decreased to 0.5 % in the entire temperature range from 0 to +70 °C (+32 to +158 °F).

For additional information, see → 59.

For further information on the devices, please refer to the relevant Technical Information:
- TI01010T: TMT82 temperature transmitter (4 to 20 mA HART)
- TI00369F: Fieldgate FXA520
- TI00400F: Multidrop Connector FXN520

6.7 Post-connection check

❑	Is the device or cable undamaged (visual check)?
❑	Do the cables comply with the requirements ?
❑	Do the cables have adequate strain relief?
❑	Are all cable glands installed, securely tightened and leak-tight?
❑	Does the supply voltage match the specifications on the nameplate?
❑	Is the terminal assignment correct ?

7 Operation options

Endress+Hauser offers comprehensive measuring point solutions with display and/or evaluation units for the Waterpilot FMX21 HART and TMT182 temperature head transmitter.

Your Endress+Hauser service organization would be glad to be of service if you have any other questions. Contact addresses can be found on the website at www.endress.com/worldwide

7.1 Overview of operating options

7.1.1 Operation using Endress+Hauser operating program

FieldCare

The FieldCare operating program is an Endress+Hauser asset management tool based on FDT technology. With FieldCare, you can configure all Endress+Hauser devices as well as devices from other manufacturers that support the FDT standard.

Hardware and software requirements can be found on the Internet:

www.de.endress.com → Search: FieldCare → FieldCare → Technical data.

FieldCare supports the following functions:
- Configuration of transmitters in online/offline mode
- Loading and saving device data (upload/download)
- Documentation of the measuring point

Connection options:
- HART via Commubox FXA195 and USB interface of a computer
- HART via Fieldgate FXA520

- Further information on FieldCare and software download can be found on the internet (www.de.endress.com ® Downloads ® Text Search: FieldCare).
- Connecting the Commubox FXA195
- As not all internal device dependencies can be mapped in offline operation, the consistency of the parameters must be checked once again before they are transmitted to the device.

DeviceCare

Function scope

Tool for connecting and configuring Endress+Hauser field devices.

The fastest way to configure Endress+Hauser field devices is with the dedicated "DeviceCare" tool. Together with the device type managers (DTMs) it presents a convenient, comprehensive solution.

For details, see Innovation brochure IN01047S

7.1.2 Operation via Field Xpert SFX

Compact, flexible and robust industrial handheld terminal for remote configuration and for obtaining measured values via the HART current output or FOUNDATION Fieldbus. For details, see the Operating Instructions BA00060S/04.

7.1.3 Operation via RIA15

The RIA15 can be used as a local display unit and for the basic configuration of the Waterpilot FMX21 hydrostatic level sensor via HART.

The following parameters can be configured on the FMX21 using the 3 operating keys on the front of the RIA15:
- Pressure engineering unit, level, temperature
- Zero adjustment (only for gauge pressure sensors)
- Empty and full pressure adjustment
- Empty and full level adjustment
- Reset to factory defaults

Further information on the operating parameters → 67

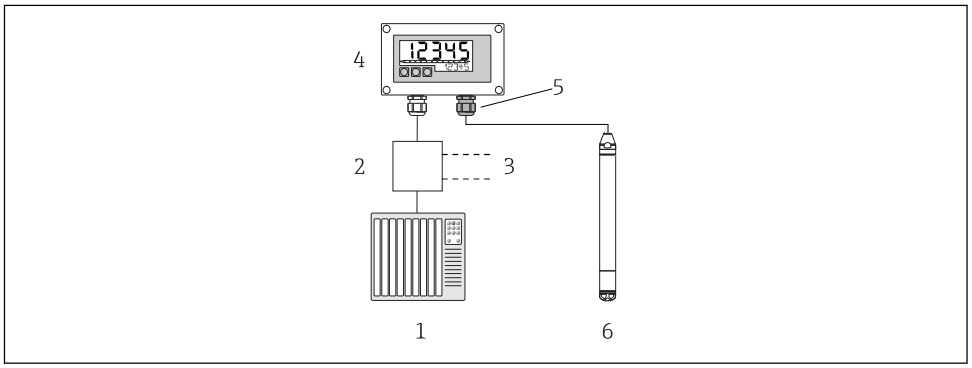

5 Remote operation of the Waterpilot FMX21 via the RIA15

1 PLC
2 Transmitter power supply, e.g. RN221N (with communication resistor)
3 Connection for Commubox FXA195 and Field Communicator 375, 475
4 RIA15 loop-powered process display unit
5 Cable gland M16 with pressure compensation membrane
6 Waterpilot FMX21

7.2 Operating concept

Operation with an operating menu is based on an operation concept with "user roles" .

User role	Meaning
Operator	Operators are responsible for the devices during normal "operation". This is usually limited to the reading of process values. If the work with the devices goes beyond reading, it concerns simple, application-specific functions that are used in operation. Should an error occur, these users simple forward the information on the errors but do not intervene themselves.
Maintenance	Service engineers usually work with the devices in the phases following device commissioning. They are primarily involved in maintenance and troubleshooting activities for which simple settings have to be made at the device. Technicians work with the devices over the entire life cycle of the product. Thus, commissioning and advanced settings and configurations are some of the tasks they have to carry out.
Expert	Experts work with the devices over the entire life cycle of the device, but, in part, have high requirements on the devices. Individual parameters/functions from the overall functionality of the devices are required for this purpose time and again. In addition to technical, process-oriented tasks, experts can also perform administrative tasks (e.g. user administration). "Experts" can avail of the entire parameter set.

7.3 Structure of the operating menu

User role	Submenu	Meaning/use
Operator	Display/ operat.	Contains parameters that are needed to configure the measured value display (selecting the values displayed, display format, etc.). With this submenu, users can change the measured value display without affecting the actual measurement.
Maintenance	setup	Contains all the parameters that are needed to commission measuring operations. This submenu has the following structure: ▪ **Standard setup parameters** A wide range of parameters, which can be used to configure a typical application, is available at the start. The measuring mode selected determines which parameters are available. After making settings for all these parameters, the measuring operation should be completely configured in the majority of cases. ▪ **"Extended setup" submenu** The "Extended setup" submenu contains additional parameters for more in-depth configuration of the measurement operation, for conversion of the measured value and for scaling the output signal. This menu is split into additional submenus depending on the measuring mode selected.
Maintenance	Diagnosis	Contains all the parameters that are needed to detect and analyze operating errors. This submenu has the following structure: ▪ **Diagnostic list** contains up to 10 currently pending error messages. ▪ **Event logbook** contains the last 10 error messages (no longer pending). ▪ **Instrument info** contains information for identifying the device. ▪ **Measured values** contains all current measured values. ▪ **Simulation** Is used to simulate pressure, level, current and alarm/warning. ▪ **Enter reset code**
Expert	Expert	Contains all the parameters of the device (including those already in one of the submenus). The "Expert" submenu is structured by the function blocks of the device. It thus contains the following submenus: ▪ **System** contains all device parameters that do not affect either measurement or integration into a distributed control system. ▪ **Measurement** contains all parameters for configuring the measurement. ▪ **Output** contains all parameters for configuring the current output. ▪ **Communication** contains all parameters for configuring the HART interface. ▪ **Diagnosis** contains all parameters required to detect and analyze operating errors.

7.4 Locking/unlocking operation

Once you have entered all the parameters, you can lock your entries against unauthorized and undesired access.

The "Operator code" parameter is used to lock/unlock the device.

Operator code

Navigation Setup → Extended setup → Operator code

Read permission Operator/Service engineers/Expert

Write permission Operator/Service engineers/Expert

Description Use this function to enter a code to lock or unlock operation.

User entry
- To lock: Enter a number ≠ the release code (value range: 1 to 65535).
- To unlock: Enter the release code.

Factory setting 0

Note The release code is "0" in the order configuration. Another release code can be defined in the "Code definition" parameter. If the user has forgotten the release code, the release code can be visible by entering the number "5864".

The release code is defined in the "Code definition" parameter.

Code definition

Navigation Setup → Extended setup → Code definition

Read permission Operator/Service engineers/Expert

Write permission Operator/Service engineers/Expert

Description Use this function to enter a release code with which the device can be unlocked.

User entry A number from 0 to 9999

Factory setting 0

Note The device setup can also be disabled on the RIA15 via a 4-digit user code.
Additional information is available in the RIA15 Operating Instructions BA01170K.

7.5 Resetting to factory settings (reset)

By entering a certain code, you can completely or partially reset the entries for the parameters to the factory settings [1]. Enter the code via the "Enter reset code" parameter (menu path: "Diagnosis" → "Enter reset code").

There are various reset codes for the device. The following table illustrates which parameters are reset by the particular reset codes. To perform a reset, operation must be unlocked (see the "Locking/unlocking operation" section).→ 38

Any customer-specific configuration carried out at the factory is not affected by a reset (customer-specific configuration remains). If you want to change the customer-specific configuration carried out at the factory, please contact Endress+Hauser Service. As there is no separate service level, the order code and serial number can be changed without a specific release code.

1) . The factory setting for the individual parameters is specified in the parameter description

Reset code [1]	Description and effect
62	**PowerUp reset (warm start)** ▪ The device is restarted. ▪ Data is read back anew from the EEPROM (process is reinitialized). ▪ Any simulation which may be running is ended.
333	**User reset** ▪ This code resets all the parameters apart from: - Device tag - Linearization table - Operating hours - Event logbook - Curr. trim 4 mA - Curr. trim 20 mA ▪ Any simulation which may be running is ended. ▪ The device is restarted.
7864	**Total reset** ▪ This code resets all the parameters apart from: - Operating hours - Event logbook ▪ Any simulation which may be running is ended. ▪ The device is restarted.

1) To be entered in "System" → "Management" → "Enter reset code"

After a "Total reset" in FieldCare you have to press the "refresh" button in order to ensure that the measuring units are also reset.

8 Integrating device via HART® protocol

Version data for the device

Firmware version	01.00.zz	▪ On the title page of the Operating instructions ▪ On nameplate → 🖹 15 ▪ **Firmware Version** parameter Diagnosis→ Instrument info → Firmware version
Manufacturer ID	17 (0x11)	**Manufacturer ID.** parameter Diagnosis → Instrument info→ Manufacturer ID
Device type code	36 (0x24)	**Device type code** parameter Diagnosis → Instrument info → Device type code
HART protocol revision	6.0	---
Device revision	1	▪ On nameplate → 🖹 15 ▪ **Device revision** parameter Diagnosis→ Instrument info → Device revision

The suitable device description file (DD) for the individual operating tools is listed in the table below, along with information on where the file can be acquired.

Operating tools

Operating tool	Reference sources for device descriptions (DD and DTM)
FieldCare	▪ www.endress.com → Downloads area ▪ CD–ROM (contact Endress+Hauser) ▪ DVD (contact Endress+Hauser)
AMS Device Manager (Emerson Process Management)	www.endress.com → Downloads area
SIMATIC PDM (Siemens)	www.endress.com → Downloads area
Field Communicator 375, 475 (Emerson Process Management)	Use update function of handheld terminal

8.1 HART process variables and measured values

The following numbers are assigned to the process variables in the factory:

Process variable	Pressure	Level	
		Linear	Table active
First process variable (Primary variable)	0 (Pressure measured)	8 (Level before linearization)	9 (Tank content)
Second process variable (Secondary variable)	2 (Corrected press.)	0 (Pressure measured)	8 (Level before linearization)

Process variable	Pressure	Level	
		Linear	Table active
Third process variable (Tertiary variable)	3 (Sensor pressure)	2 (Corrected press.)	0 (Pressure measured)
Fourth process variable (Quaternary variable)	4 (Sensor temp.)		

The assignment of the device variables to the process variable is displayed in the **Expert → Communication → HART output** menu.

The assignment of the device variables to the process variable (SV, TV, QV) can be changed using HART command 51.

An overview of the possible device variables can be found in the following section.

8.2 Device variables and measured values

The following measured values are assigned to the individual device variables:

Device variable code	Device variable	Measured value	Operating mode
0	PRESSURE_1_FINAL_VALUE	Pressure measured	All
1	PRESSURE_1_AFTER_DAMPING	Pressure af.damp	All
2	PRESSURE_1_AFTER_CALIBRATION	Corrected press.	All
3	PRESSURE_1_AFTER_SENSOR	Corrected press.	All
4	MEASURED_TEMPERATURE_1	Sensor temp.	All
8	MEASURED_LEVEL_AFTER_ SIMULATION	Level before lin.	Only level
9	MEASURED_TANK_CONTENT_AFTER_ SIMULATION	Tank content	Only level
10	CORRECTED_MEASUREMENT_ DENSITY	Process density	Only level
12	HART_INPUT_VALUE [1)]	HART input val.	-
251	None (no device variable is mapped)	-	All (but only for quaternary variable)

1) Cannot be selected as an output

The device variables can be queried from a HART® master using HART® command 9 or 33.

9 Commissioning

NOTICE

If a pressure smaller than the minimum permitted pressure or greater than the maximum permitted pressure is present at the device, the following messages are output in succession:

- "S140 Working range P" or "F140 Working range P" (depending on the setting in the "Alarm behav. P" parameter)
- "S841 Sensor range" or "F841 Sensor range" (depending on the setting in the "Alarm behav. P" parameter)
- "S971 Adjustment" (depending on setting in "Alarm behav. P" parameter

9.1 Post-installation check and function check

Before commissioning your measuring point, ensure that the post-installation and post-connection check have been performed.

- "Post-installation check" checklist→ 25
- "Post-connection check" checklist→ 35

9.2 Unlocking/locking configuration

If the device is locked to prevent configuration, it must first be unlocked.

9.2.1 Locking/unlocking software

If the device is locked via the software (device access code), the key symbol appears in the measured value display. If an attempt is made to write to a parameter, a prompt for the device access code appears. To unlock, enter the user-defined device access code.

9.3 Commissioning

Commissioning comprises the following steps:

- Function check→ 43
- Selection of the measuring mode and pressure unit → 43
- Position adjustment → 44
- Configuring measurement:
  - Pressure measurement→ 46
  - Level measurement → 48

9.4 Measuring mode selection

The device is configured for the "Pressure" measuring mode as standard. The measuring range and the unit in which the measured value is transmitted correspond to the data on the nameplate.

WARNING

Changing the measuring mode affects the span (URV)

This situation can result in product overflow.

- If the measuring mode is changed, the setting for the span (URV) must be checked in the "Setup" operating menu and readjusted if necessary.

Measuring mode

Navigation Setup → Measuring mode

Write permission Operator/Service engineers/Expert

Description Select the measuring mode.
The operating menu is structured differently depending on the measuring mode selected.

Options
- Pressure
- Level

Factory setting Level

9.5 For selecting the pressure engineering unit

Press. eng. unit

Navigation Setup → Press. eng. unit

Write permission Operator/Service engineers/Expert

Description Select the pressure engineering unit. If a new pressure engineering unit is selected, all pressure-specific parameters are converted and displayed with the new unit.

Options
- mbar, bar
- mmH2O, mH2O, inH2O
- ftH2O
- Pa, kPa, MPa
- psi
- mmHg, inHg
- kgf/cm^2

Factory setting mbar or bar depending on the nominal measuring range of the sensor module, or as per order specifications.

9.6 Position adjustment

The pressure resulting from the orientation of the device can be corrected here.

Pos. zero adjust (gauge pressure sensor)

Navigation Setup → Pos. zero adjust

Write permission Operator/Service engineers/Expert

Description Position adjustment – the pressure difference between zero (set point) and the measured pressure need not be known.

Options
- Confirm
- Cancel

Example
- Measured value = 2.2 mbar (0.033 psi)
- You correct the measured value via the "Pos. zero adjust" parameter with the "Confirm" option. This means that you are assigning the value 0.0 to the pressure present.
- Measured value (after pos. zero adjust) = 0.0 mbar
- The current value is also corrected.

Factory setting Cancel

Calib. offset

Write permission Service engineers/Expert

Description Position adjustment – the pressure difference between the set point and the measured pressure must be known.

Example
- Measured value = 982.2 mbar (14.73 psi)
- You correct the measured value with the value entered (e.g. 2.2 mbar (0.033 psi)) via the "Calib. Offset" parameter. This means that you are assigning the value 980.0 (14.7 psi) to the pressure present.
- Measured value (after pos. zero adjust) = 980.0 mbar (14.7 psi)
- The current value is also corrected.

Factory setting 0.0

9.7 Configuring the damping

The output signal follows measured value changes with the delay time. This can be configured via the operating menu.

Damping

Navigation Setup → Damping

Write permission Operator/Service engineers/Expert
(if the "Damping" DIP switch is set to "on")

Description Enter damping time (time constant τ) ("Damping" DIP switch set to "on")
Display damping time (time constant τ) ("Damping" DIP switch set to "off").
The damping affects the speed at which the measured value reacts to changes in pressure.

Input range 0.0 to 999.0 s

Factory setting 2.0 sec. or according to order specifications

9.8 Configuring pressure measurement

9.8.1 Calibration with reference pressure (wet calibration)

Example:

In this example, a device with a 400 mbar (6 psi) sensor module is configured for the 0 to +300 mbar (0 to 4.5 psi) measuring range, i.e. 0 mbar and 300 mbar (4.5 psi) are assigned, respectively, to the 4 mA value and the 20 mA value.

Prerequisite:

The pressure values 0 mbar and 300 mbar (4.5 psi) can be specified. For example, the device is already installed.

Due to the orientation of the device, there may be pressure shifts in the measured value, i.e. the measured value is not zero in a pressureless condition. For information on how to perform position adjustment, see → 44.

	Description	
1	Select the "Pressure" measuring mode via the "Measuring Mode" parameter. Menu path: Setup → Measuring mode **WARNING** **Changing the measuring mode affects the span (URV)** This situation can result in product overflow. ▶ If the measuring mode is changed, the setting for the span (URV) must be checked in the "Setup" operating menu and readjusted if necessary.	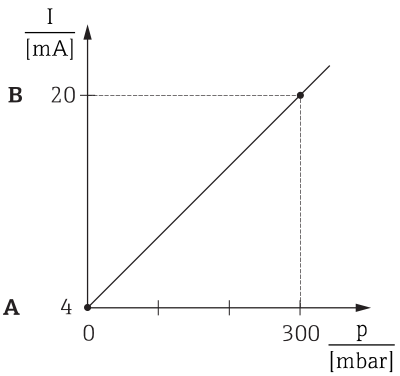 A0031032 *A* *See table, step 3.* *B* *See table, step 4.*
2	Select a pressure unit via the "Press eng. unit" parameter, here "mbar" for example. Menu path: Setup → Press. eng. unit	
3	The pressure for the LRV (4 mA value) is present at the device, here 0 mbar for example	
	Select the "Get LRV" parameter. Menu path: Setup → Extended setup → Current output → Get LRV	
	Confirm the present value by selecting "Apply". The present pressure value is assigned to the lower current value (4 mA).	
4	The pressure for the URV (20 mA value) is present at the device, here 300 mbar (4.5 psi) for example.	
	Select the "Get URV" parameter. Menu path: Setup → Extended setup → Current output → Get URV	
	Confirm the present value by selecting "Apply". The present pressure value is assigned to the upper current value (20 mA).	
5	Result: The measuring range is configured for 0 to +300 mbar (0 to 4.5 psi).	

9.8.2 Calibration without reference pressure (dry calibration)

Example:

In this example, a device with a 400 mbar (6 psi) sensor module is configured for the 0 to +300 mbar (0 to 4.5 psi) measuring range, i.e. 0 mbar and 300 mbar (4.5 psi) are assigned, respectively, to the 4 mA value and the 20 mA value.

Prerequisite:

This is a theoretical calibration, i.e. the pressure values for the lower and upper range are known.

Due to the orientation of the device, there may be pressure shifts in the measured value, i.e. the measured value is not zero in a pressureless condition. For information on how to perform position adjustment, see → 44.

	Description
1	Select the "Pressure" measuring mode via the "Measuring Mode" parameter. Menu path: Setup → Measuring mode **WARNING** **Changing the measuring mode affects the span (URV)** This situation can result in product overflow. ► If the measuring mode is changed, the setting for the span (URV) must be checked in the "Setup" operating menu and readjusted if necessary.
2	Select a pressure unit via the "Press eng. unit" parameter, here "mbar" for example. Menu path: Setup → Press. eng. unit
3	Select the "Set LRV" parameter. Menu path: Setup → Extended setup → Current output → Set LRV
	Enter the value for the "Set LRV" parameter (here 0 mbar) and confirm. This pressure value is assigned to the lower current value (4 mA).
4	Select the "Set URV" parameter. Menu path: Setup → Extended setup → Current output → Set URV
	Enter the value for the "Set URV" parameter, here 300 mbar (4.5 psi), and confirm. This pressure value is assigned to the upper current value (20 mA).
5	Result: The measuring range is configured for 0 to +300 mbar (0 to 4.5 psi).

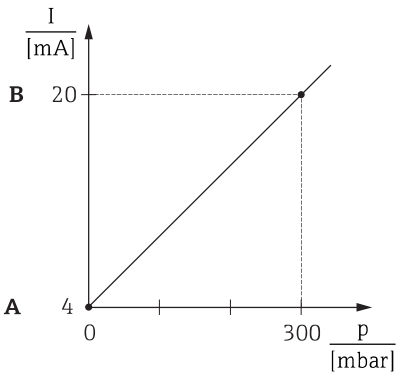

A See table, step 3.
B See table, step 4.

9.9 Configuring level measurement

9.9.1 Information on level measurement

You have a choice of two methods for calculating the level: "In pressure" and "In height". The table in the "Overview of level measurement" section that follows provides you with an overview of these two measuring tasks.

- The limit values are not checked, i.e. the values entered must be appropriate for the sensor module and the measuring task for the device to be able to measure correctly.
- Customer-specific units are not possible.
- The values entered for "Empty calib./Full calib.", "Empty pressure/Full pressure", "Empty height/Full height" and "Set LRV/Set URV" must be at least 1% apart. The value will be rejected, and a message displayed, if the values are too close together.

9.9.2 Overview of level measurement

Measuring task	Level selection	Measured variable options	Description	Measured value display
Calibration is performed by entering two pressure-level value pairs.	"In pressure"	Via the "Output unit" parameter: %, level, volume or mass units	▪ Calibration with reference pressure (wet calibration) → 🖹 50 ▪ Calibration without reference pressure (dry calibration)→ 🖹 48	The measured value display and the "Level before lin" parameter display the measured value.
Calibration is performed by entering the density and two height-level value pairs.	"In height"		▪ Calibration with reference pressure (wet calibration) → 🖹 54 ▪ Calibration without reference pressure (dry calibration)→ 🖹 52	

9.9.3 "In pressure" level selection Calibration without reference pressure (dry calibration)

Example:

In this example, the volume in a tank should be measured in liters. The maximum volume of 1 000 l (264 gal) corresponds to a pressure of 400 mbar (6 psi).

The minimum volume of 0 liters corresponds to a pressure of 0 mbar since the process isolating diaphragm of the probe is at the start of the level measuring range.

Prerequisite:

- The measured variable is in direct proportion to the pressure.
- This is a theoretical calibration i.e. the pressure and volume values for the lower and upper calibration point must be known.

- The values entered for "Empty calib./Full calib.", "Empty pressure/Full pressure" and "Set LRV/Set URV" must be at least 1% apart. The value will be rejected, and a message displayed, if the values are too close together. Further limit values are not checked, i.e. the values entered must be appropriate for the sensor module and the measuring task for the device to be able to measure correctly.
- Due to the orientation of the device, there may be pressure shifts in the measured value, i.e. when the vessel is empty or partly filled, the measured value is not zero. For information on how to perform position adjustment, see → 🖹 44.

	Description	
1	Select the "Level" measuring mode via the "Measuring mode" parameter. Menu path: Setup → Measuring mode **⚠ WARNING** **Changing the measuring mode affects the span (URV)** This situation can result in product overflow. ▶ If the measuring mode is changed, the setting for the span (URV) must be checked in the "Setup" operating menu and readjusted if necessary.	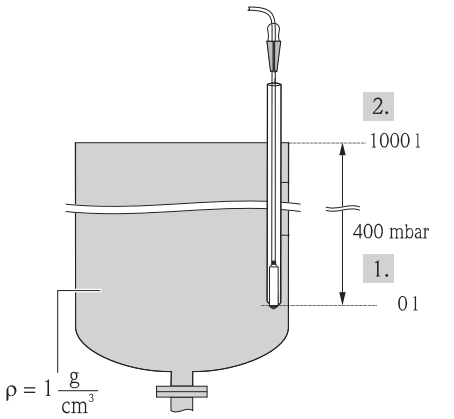 *1 See table, steps 6 and 7.* *2 See table, steps 8 and 9.*
2	Select a pressure unit via the "Press eng. unit" parameter, here "mbar" for example. Menu path: Setup → Press. eng. unit	
3	Select the "In pressure" level mode via the "Level selection" parameter. Menu path: Setup → Extended setup → Level → Level selection.	
4	Select a volume unit via the "Output unit" parameter, here "l" (liters) for example. Menu path: Setup → Extended setup → Level → Output unit	
5	Select the "Dry" option via the "Calibration mode" parameter. Menu path: Setup → Extended setup → Level → Calibration mode	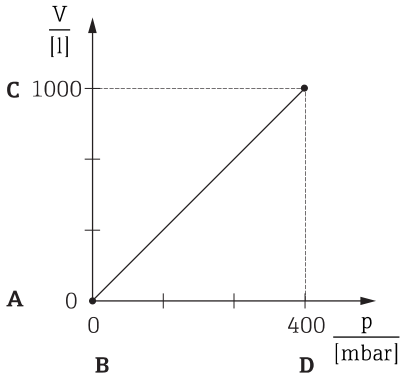 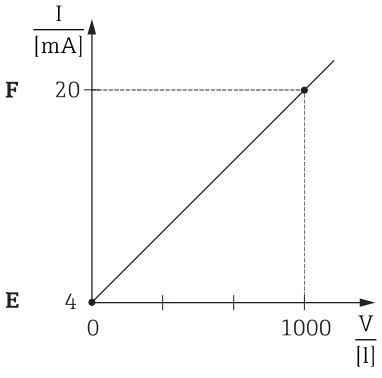 *A See table, step 6.* *B See table, step 7.* *C See table, step 8.* *D See table, step 9.* *E See table, step 11* *F See table, step 12*
6	Enter the volume value for the lower calibration point via the "Empty calib." parameter, here 0 liters for example. Menu path: Setup → Extended setup → Level → Empty calib.	
7	Enter the pressure value for the lower calibration point via the "Empty pressure" parameter, here "0 mbar" for example. Menu path: Setup → Extended setup → Level → Empty pressure	
8	Enter the volume value for the upper calibration point via the "Full calib." parameter, here 1 000 l (264 gal) for example. Menu path: Setup → Extended setup → Level → Full calib.	
9	Enter the pressure value for the upper calibration point via the "Full pressure" parameter, here 400 mbar (6 psi) for example. Menu path: Setup → Extended setup → Level → Full pressure	
10	"Adjust density" contains the factory setting 1.0 but can be changed if required. The value pairs subsequently entered must correspond to this density. Menu path: Setup → Extended setup → Level → Adjust density	
11	Set the volume value for the lower current value (4 mA) via the "Set LRV" parameter (0 l). Menu path: Setup → Extended setup → Current output → Set LRV	
12	Set the volume value for the upper current value (20 mA) via the "Set URV" parameter(1 000 l (264 gal)). Menu path: Setup → Extended setup → Current output → Set URV	

	Description	
13	If the process uses a medium other than that on which the calibration was based, the new density must be specified in the "Process density" parameter. Menu path: Setup → Extended setup → Current output → Process density.	
14	If density correction is required, assign the temperature probe in the "Auto dens. corr." parameter. A density correction is only possible for water. A temperature-density curve that is saved in the device is used. For this reason, the "Adjust density" (step 10) and "Process density" (step 13) parameters are not used here. Menu path: Expert → Application → Level → Auto dens. corr.	
15	Result: The measuring range is configured for 0 to 1 000 l (0 to 264 gal).	

For this level mode, the measured variables %, level, volume and mass are available, see "Output unit" → 94.

9.9.4 "In pressure" level selection Calibration with reference pressure (wet calibration)

Example:

In this example, the level in a tank should be measured in "m". The maximum level is 3 m (9.8 ft).

The pressure range is derived from the level and the density of the medium. In this situation, the device sets the pressure range to 0 to +300 mbar (0 to 4.5 psi).

Prerequisite:

- The measured variable is in direct proportion to the pressure.
- The tank can be filled and emptied.

The values entered for "Empty calib./Full calib." and" Set LRV/Set URV" and the pressures present must be at least 1% apart. The value will be rejected, and a message displayed, if the values are too close together. Other limit values are not checked, i.e. the values entered must be appropriate for the sensor and the measuring task for the device to be able to measure correctly.

	Description
1	Perform "position adjustment"→ 🖹 44.
2	Select the "Level" measuring mode via the "Measuring mode" parameter. Menu path: Setup → Measuring mode **⚠ WARNING** **Changing the measuring mode affects the span (URV)** This situation can result in product overflow. ▶ If the measuring mode is changed, the setting for the span (URV) must be checked in the "Setup" operating menu and readjusted if necessary.
3	Select a pressure unit via the "Press eng. unit" parameter, here "mbar" for example. Menu path: Setup → Press. eng. unit
4	Select the "In pressure" level mode via the "Level selection" parameter. Menu path: Setup → Extended setup → Level → Level selection.
5	If density correction is required, assign the temperature probe in the "Auto dens. corr." parameter. Menu path: Expert → Application → Auto dens. corr. A density correction is only possible for water. A temperature-density curve that is saved in the device is used. For this reason, the "Adjust density" (step 8) and "Process density" (step 13) parameters are not used here.
6	Select a level unit via the "Output unit" parameter, here "m" for example. Menu path: Setup → Extended setup → Level → Output unit
7	Select the "Wet" option via the "Calibration mode" parameter. Menu path: Setup → Extended setup → Level → Calibration mode
8	If the calibration is performed with a medium other than the process medium, enter the density of the calibration medium in the "Adjust density" parameter. Menu path: Setup → Extended setup → Level → Adjust density ℹ The process density can be changed only if automatic density correction is switched off (see step 5).
9	The hydrostatic pressure for the lower calibration point is present at the device, here "0 mbar" for example.
	Select the "Empty calib." parameter. Menu path: Setup → Extended setup → Level → Empty calib.
	Enter the level value, here 0 m for example. The pressure value present is assigned to the lower level value by confirming the value.
10	The hydrostatic pressure for the upper calibration point is present at the device, here 300 mbar (4.35 psi) for example.

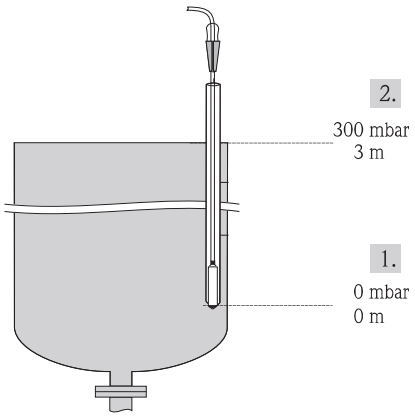

1 See table, step 9.
2 See table, step 10.

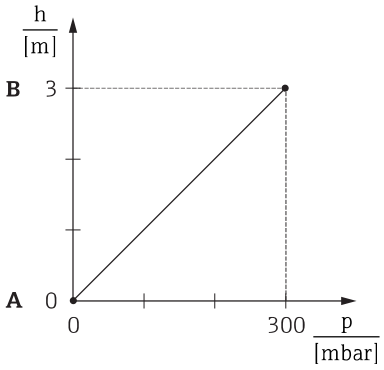

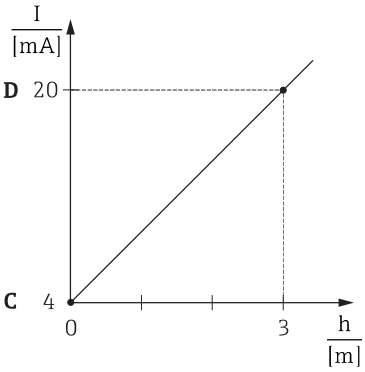

A See table, step 9.
B See table, step 10.
C See table, step 11.
D See table, step 12.

	Description	
	Select the "Full calib." parameter. Menu path: Setup → Extended setup → Level → Full calib.	
	Enter the level value, here 3 m (9.8 ft) for example. The pressure value present is assigned to the upper level value by confirming the value.	
11	Use the "Set LRV" parameter to set the level value for the lower current value (4 mA), here "0 m" for example. Menu path: Setup → Extended setup → Current output → Set LRV	
12	Use the "Set URV" parameter to set the upper current value (20 mA) (3 m (9.8 ft)). Menu path: Setup → Extended setup → Current output → Set URV	
12	If the process uses a medium other than that on which the calibration was based, the new density must be specified in the "Process density" parameter. Menu path: Setup → Extended setup → Level → Process density. The process density can be changed only if automatic density correction is switched off (see step 5).	
13	Result: The measuring range is configured for 0 to 3 m (0 to 9.8 ft).	

For this level mode, the measured variables %, level, volume and mass are available, see "Output unit". → 94.

9.9.5 "In height" level selection Calibration without reference pressure (dry calibration)

Example:

In this example, the volume in a tank should be measured in liters. The maximum volume of 1 000 l (264 gal) corresponds to a level of 4 m (13 ft). The minimum volume of 0 liter corresponds to a level of 0 m since the process isolating diaphragm of the probe is at the start of the level measuring range.

Prerequisite:

- The measured variable is in direct proportion to the pressure.
- This is a theoretical calibration i.e. the height and volume values for the lower and upper calibration point must be known.

- The values entered for "Empty calib./Full calib.", "Empty height/Full height" and" Set LRV/Set URV" must be at least 1% apart. The value will be rejected, and a message displayed, if the values are too close together. Other limit values are not checked, i.e. the values entered must be appropriate for the sensor and the measuring task for the device to be able to measure correctly.
- Due to the orientation of the device, there may be pressure shifts in the measured value, i.e. when the vessel is empty or partly filled, the measured value is not zero. For information on how to perform position adjustment, see → 44.

	Description
1	Select the "Level" measuring mode via the "Measuring mode" parameter. Menu path: Setup → Measuring mode **⚠ WARNING** **Changing the measuring mode affects the span (URV)** This situation can result in product overflow. ▶ If the measuring mode is changed, the setting for the span (URV) must be checked in the "Setup" operating menu and readjusted if necessary.
2	Select a pressure unit via the "Press eng. unit" parameter, here "mbar" for example. Menu path: Setup → Press. eng. unit
3	Select the "In height" level mode via the "Level selection" parameter. Menu path: Setup → Extended setup → Level → Level selection.
4	If density correction is required, assign the temperature probe in the "Auto dens. corr." parameter. Menu path: Setup → Extended setup → Level → Level selection.
4	Select a volume unit via the "Output unit" parameter, here "l" (liters) for example. Menu path: Setup → Extended setup → Level → Output unit A density correction is only possible for water. A temperature-density curve that is saved in the device is used. For this reason, the "Adjust density" (step 12) and "Process density" (step 15) parameters are not used here.
5	Select a volume unit via the "Output unit" parameter, here "l" (liters) for example. Menu path: Setup → Extended setup → Level → Output unit
6	Select a level unit via the "Height unit" parameter, here "m" for example. Menu path: Setup → Extended setup → Level → Height unit
7	Select the "Dry" option via the "Calibration mode" parameter. Menu path: Setup → Extended setup → Level → Calibration mode
8	Enter the volume value for the lower calibration point via the "Empty calib." parameter, here 0 liters for example. Menu path: Setup → Extended setup → Level → Empty calib.
9	Enter the height value for the lower calibration point via the "Empty height" parameter, here 0 m for example. Menu path: Setup → Extended setup → Level → Empty height
10	Enter the volume value for the upper calibration point via the "Full calib." parameter, here 1 000 l (264 gal) for example. Menu path: Setup → Extended setup → Level → Full calib.

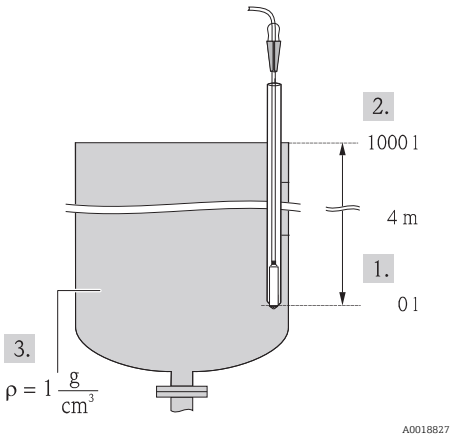

1 See table, steps 10 and 11.
2 See table, steps 13 and 14.
3 See table, step 12

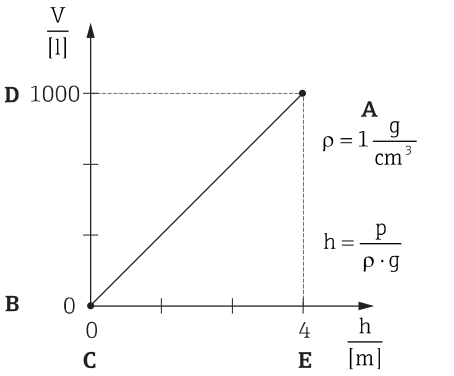

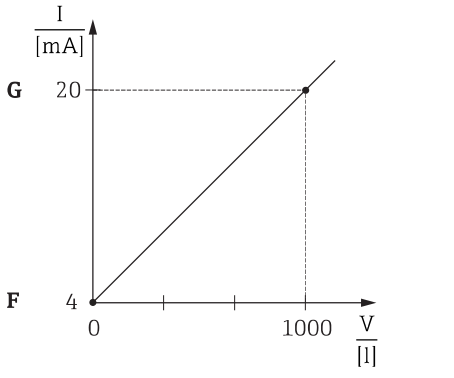

A See table, step 12.
B See table, step 8.
C See table, step 9.
D See table, step 10.
E See table, step 11.
F See table, step 13.
G See table, step 14.

	Description	
11	Enter the height value for the upper calibration point via the "Full height" parameter, here 4 m (13 ft) for example. Menu path: Setup → Extended setup → Level → Full height	
12	Enter the density of the medium via the "Adjust density" parameter, here "1 g/cm³" (1 SGU) for example. Menu path: Setup → Extended setup → Level → Adjust density	
13	Set the volume value for the lower current value (4 mA) via the "Set LRV" parameter (0 l). Menu path: Setup → Extended setup → Current output → Set LRV	
14	Set the volume value for the upper current value (20 mA) via the "Set URV" parameter (1 000 l (264 gal)). Menu path: Setup → Extended setup → Current output → Set URV	
15	If the process uses a medium other than that on which the calibration was based, the new density must be specified in the "Process density" parameter. Menu path: Setup → Extended setup → Current output → Process density. The process density can only be changed if automatic density correction is switched off (see Step 4).	
16	Result: The measuring range is configured for 0 to 1 000 l (0 to 264 gal).	

For this level mode, the measured variables %, level, volume and mass are available, see "Output unit". → 94.

9.9.6 "In height" level selection Calibration with reference pressure (wet calibration)

Example:

In this example, the volume in a tank should be measured in liters. The maximum volume of 1 000 l (264 gal) corresponds to a level of 4 m (13 ft).

The minimum volume of 0 liter corresponds to a level of 0 m since the process isolating diaphragm of the probe is at the start of the level measuring range. The density of the fluid is 1 g/cm³ (1 SGU).

Prerequisite:

- The measured variable is in direct proportion to the pressure.
- The tank can be filled and emptied.

The values entered for "Empty calib./Full calib." and" Set LRV/Set URV" and the pressures present must be at least 1% apart. The value will be rejected, and a message displayed, if the values are too close together. Other limit values are not checked, i.e. the values entered must be appropriate for the sensor and the measuring task for the device to be able to measure correctly.

	Description	
1	Perform "position adjustment"→ 🖹 44.	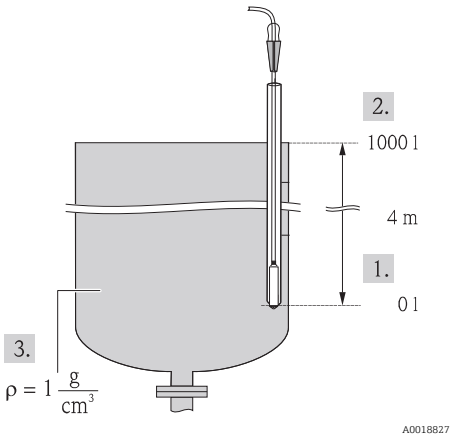 A0018827 *1 See table, step 9.* *2 See table, step 10.* *3 See table, step 11.*
2	Select the "Level" measuring mode via the "Measuring mode" parameter. Menu path: Setup → Measuring mode **⚠ WARNING** **Changing the measuring mode affects the span (URV)** This situation can result in product overflow. ▶ If the measuring mode is changed, the setting for the span (URV) must be checked in the "Setup" operating menu and readjusted if necessary.	
3	Select the "In height" level mode via the "Level selection" parameter. Menu path: Setup → Extended setup → Level → Level selection.	
4	If density correction is required, assign the temperature probe in the "Auto dens. corr." parameter. Menu path: Expert → Application → Auto dens. corr. A density correction is only possible for water. A temperature-density curve that is saved in the device is used. For this reason, the "Adjust density" (step 11) and "Process density" (step 14) parameters are not used here.	
5	Select a pressure unit via the "Press eng. unit" parameter, here "mbar" for example. Menu path: Setup → Press. eng. unit	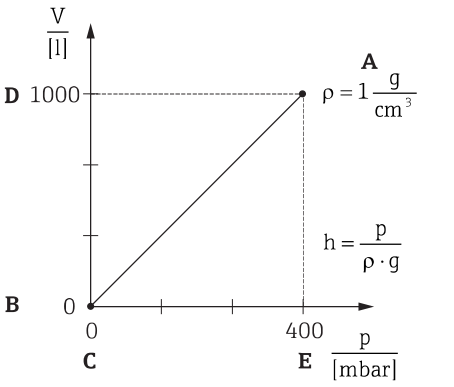 A0031097
6	Select a volume unit via the "Output unit" parameter, here "l" (liters) for example Menu path: Setup → Extended setup → Level → Output unit	
7	Select a height unit via the "Height unit" parameter, here "m" for example. Menu path: Setup → Extended setup → Level → Height unit	
8	Select the "Wet" option via the "Calibration mode" parameter. Menu path: Setup → Extended setup → Level → Calibration mode	
9	The hydrostatic pressure for the lower calibration point is present at the device, here "0 mbar" for example.	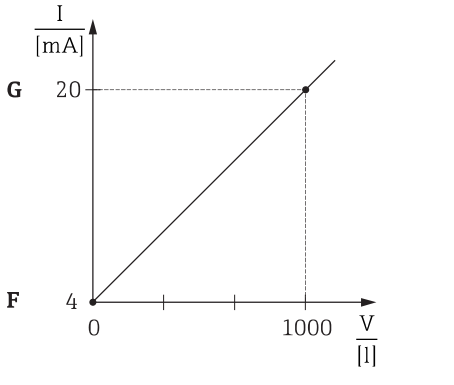 A0031067 *A See table, step 11.* *B See table, step 9.* *C See table, step 9.* *D See table, step 10.*
	Enter the volume value for the lower calibration point via the "Empty calib." parameter, here "0 liters" for example. Menu path: Setup → Extended setup → Level → Empty calib.	
10	The hydrostatic pressure for the upper calibration point is present at the device, here "400 mbar (6 psi)" for example.	
	Enter the volume value for the upper calibration point via the "Full calib." parameter, here 1 000 l (264 gal) for example. Menu path: Setup → Extended setup → Level → Full calib.	

	Description	
11	If the calibration is performed with a medium other than the process medium, enter the density of the calibration medium in the "Adjust density" parameter, here 1 g/cm³ (1 SGU) for example. Menu path: Setup → Extended setup → Level → Adjust density The process density can only be changed if automatic density correction is switched off (see Step 4).	*E See table, step 10.* *F See table, step 12.* *G See table, step 13.*
12	Set the volume value for the lower current value (4 mA) via the "Set LRV" parameter (0 l). Menu path: Setup → Extended setup → Current output → Set LRV	
13	Set the volume value for the upper current value (20 mA) via the "Set URV" parameter(1 000 l (264 gal)). Menu path: Setup → Extended setup → Current output → Set URV	
14	If the process uses a medium other than that on which the calibration was based, the new density must be specified in the "Process density" parameter. Menu path: Setup → Extended setup → Level → Process density. The process density can only be changed if automatic density correction is switched off (see Step 4).	
15	Result: The measuring range is configured for 0 to 1 000 l (0 to 264 gal).	

For this level mode, the measured variables %, level, volume and mass are available, see "Output unit". → 94.

9.9.7 Calibration with partially filled vessel (wet calibration)

Example:

This example explains a wet calibration for cases in which it is not possible to empty the vessel and then fill it to 100%.

During this wet calibration, a level of 20% is used as the calibration point for "Empty" and a level of "25%" is used as the calibration point for "Full".

The calibration is then extended to 0% to 100% and lower range-value (LRV)/upper range-value (URV) are adapted accordingly.

Prerequisite:

- The default value in level mode for the calibration mode is "Wet".
- This value can be adjusted: Menu path: Setup → Extended setup → Level → Calibration mode

	Description	
1	Select the "Level" measuring mode via the "Measuring mode" parameter. Menu path: Setup → Measuring mode **⚠ WARNING** **Changing the measuring mode affects the span (URV)** This situation can result in product overflow. ▶ If the measuring mode is changed, the setting for the span (URV) must be checked in the "Setup" operating menu and readjusted if necessary.	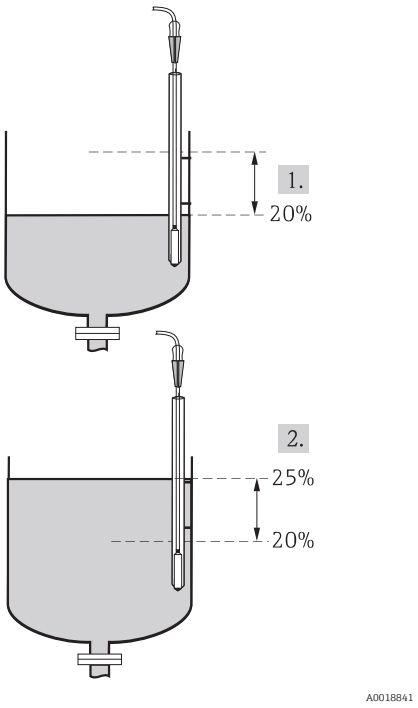 *1 See table, step 2* *2 See table, step 3*
2	Set the value for "Empty calib." with the acting pressure for the level, e.g. 20% Menu path: Setup → Extended setup → Level → Empty calib.	
3	Set the value for "Full calib." with the acting pressure for the level, e.g. 25%. Menu path: Setup → Extended setup → Level → Full calib.	
4	The values for the pressure when the vessel is full or empty are measured automatically during adjustment. The transmitter automatically sets the pressure values that are most suitable for "Empty calib." and "Full calib." as the minimum and maximum pressure which generates the output current. For this reason, the correct upper-range value (URV) and the correct lower-range value (LRV) must be set.	

If the process uses a medium other than that on which the calibration was based, the new density must be specified in the "Process density" parameter. In this case, you have to enter the various densities via the following menu path:
- Setup → Extended setup → Level→ Adjust Density (034) (e.g. 1.0 kg/l for water)
- Setup → Extended setup → Level → Process Density (035) (e.g. 0.8 kg/l for oil)

9.9.8 Level measurement with absolute pressure probe and external pressure signal (electrical differential pressure)

Example:

In this example, a Waterpilot FMX21 and a Cerabar M (each with an absolute pressure measuring cell) are connected via the common communication bus. The level can thus be measured in a deep well, with simultaneous compensation for the effect of atmospheric pressure.

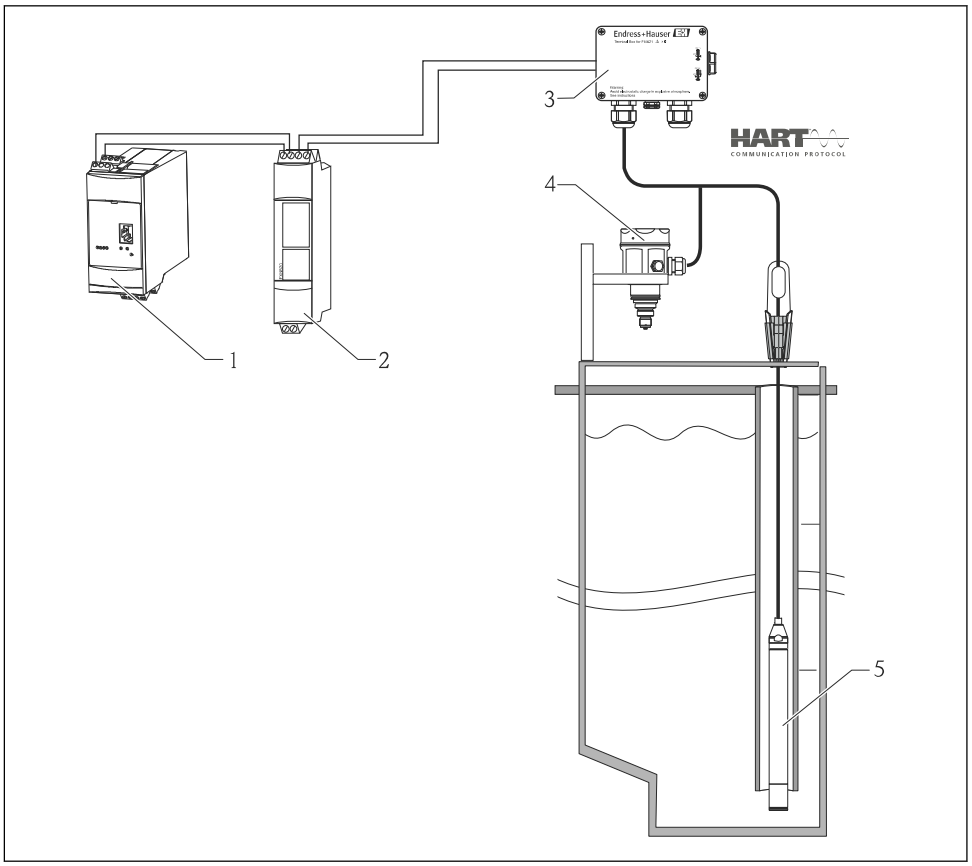

1 *Fieldgate FXA520*
2 *Multidrop Connector FXN520*
3 *Terminal box (can be ordered as an accessory)*
4 *Cerabar M absolute pressure (level)*
5 *Waterpilot absolute pressure (pressure)*

	Sensor level adjustment (Waterpilot)
1	Select the "Pressure" measuring mode via the "Measuring Mode" parameter. Menu path: Setup → Measuring mode **⚠ WARNING** **Changing the measuring mode affects the span (URV)** This situation can result in product overflow. ► If the measuring mode is changed, the setting for the span (URV) must be checked in the "Setup" operating menu and readjusted if necessary.
2	Select a pressure unit via the "Press eng. unit" parameter, here "mbar" for example. Menu path: Setup → Press. eng. unit
3	The sensor is unpressurized, perform a position adjustment → 📄 44
4	Switch on burst mode via the "Burst mode" parameter. Menu path: Expert → Communication → HART config
5	Set the output current to "Fixed" 4.0 mA via the "Current Mode" parameter. Menu path: Expert → Communication → HART config
6	Configure an address ≠0 using the "Bus address" parameter, e.g. bus address = 1. (HART 5.0 master: Range 0 to 15, where address = 0 calls up the "Signaling" setting; HART 6.0 master: Range 0 to 63) Menu path: Expert → Communication → HART config

	Sensor level adjustment (Cerabar)
1	Select the "Level" measuring mode via the "Measuring mode" parameter. Menu path: Setup → Measuring mode **⚠ WARNING** **Changing the measuring mode affects the span (URV)** This situation can result in product overflow. ▶ If the measuring mode is changed, the setting for the span (URV) must be checked in the "Setup" operating menu and readjusted if necessary.
2	Select a pressure unit via the "Press eng. unit" parameter, here "mbar" for example. Menu path: Setup → Press. eng. unit
3	The sensor is unpressurized, perform a position adjustment → 📄 44
4	Set the output current to "Fixed" 4.0 mA via the "Current Mode" parameter. Menu path: Expert → Communication → HART config
5	Configure an address ≠0 using the "Bus address" parameter, e.g. bus address = 2. (HART 5.0 master: Range 0 to 15, where address = 0 calls up the "Signaling" setting; HART 6.0 master: Range 0 to 63) Menu path: Expert → Communication → HART config
6	Activate the reading of a value sent externally in burst mode via the "Electr. Delta P" parameter. Menu path: Expert → Application
7	Perform level adjustment (wet or dry)
8	Result: The measured value output by the atmospheric pressure sensor equals the level in the deep well (differential signal) and can be read out by means of a HART request for the address of the atmospheric pressure sensor.

- It is not permissible to reverse the assignment of the measuring points to the direction of communication.
- The measured value of the transmitting device (via burst) must always be greater than the measured value of the receiving device (via "Electr. Delta P" mode).
- Adjustments that involve an offset in the pressure values (e.g. position adjustment, trim) must always suit the individual sensor and the sensor's orientation irrespective of the "Electr. Delta P" application.
- Other settings result in non-permitted use of the "Electr. Delta P" mode and can lead to incorrect measured values.

9.10 Automatic density compensation

9.10.1 Automatic density compensation with the internally measured sensor temperature

Example:

In this example, a Waterpilot FMX21 is used for level measurement in water. The change in the water density caused by changing temperatures is automatically factored into the level signal by activating the automatic density compensation.

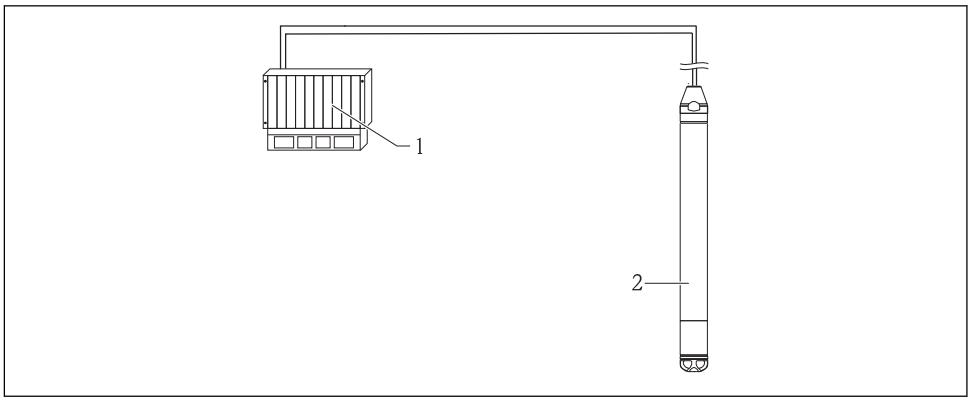

1 HART master, e.g. PLC (programmable logic controller)
2 Waterpilot FMX21

	Waterpilot adjustment for level measurement
1	Select the "Level" measuring mode via the "Measuring mode" parameter. Menu path: Setup → Measuring mode **⚠ WARNING** **Changing the measuring mode affects the span (URV)** This situation can result in product overflow. ▶ If the measuring mode is changed, the setting for the span (URV) must be checked in the "Setup" operating menu and readjusted if necessary.
2	Select a pressure unit via the "Press eng. unit" parameter, here "mbar" for example. Menu path: Setup → Press. eng. unit
3	The sensor is unpressurized, perform a position adjustment → 🖹 44
4	Set the "Auto dens. corr." parameter to Sensor temperature. Menu path: Expert → Application
5	Perform level adjustment (wet or dry)
6	Result: The measured value output by the Waterpilot corresponds to the level in the deep well corrected by means of the density characteristic line of water.

9.10.2 Automatic density compensation using an integrated Pt100 for calculation in a suitable HART master (e.g. PLC)

Example:

In this example, the FMX21 with an integrated Pt100 is connected via the common communication bus to any temperature head transmitter with HART communication (e.g. TMT182). The temperature and pressure signal is transmitted to the HART master (e.g. PLC), where a corrected level value can be generated using a stored linearization table or density function (of a chosen medium). A pressure signal and a temperature signal can thus be generated with a chosen density function to compensate for a level.

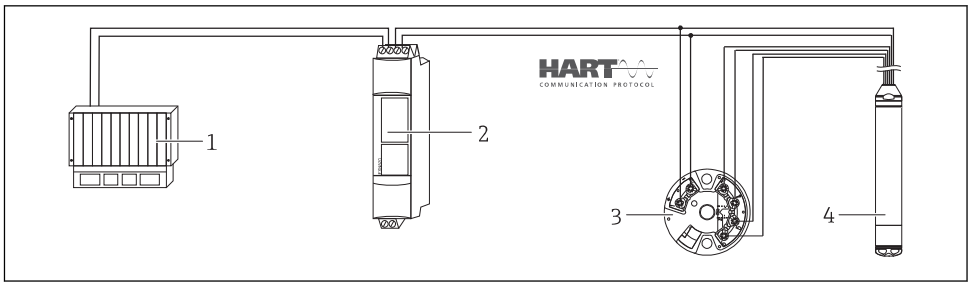

1 HART master, PLC (programmable logic controller)
2 Multidrop Connector FXN520
3 TMT182 temperature head transmitter
4 Waterpilot FMX21

	Waterpilot adjustment for level measurement
1	Select the "Level" measuring mode via the "Measuring mode" parameter. Menu path: Setup → Measuring mode **⚠ WARNING** **Changing the measuring mode affects the span (URV)** This situation can result in product overflow. ▶ If the measuring mode is changed, the setting for the span (URV) must be checked in the "Setup" operating menu and readjusted if necessary.
2	Select a pressure unit via the "Press eng. unit" parameter, here "mbar" for example. Menu path: Setup → Press. eng. unit
3	The sensor is unpressurized, perform a position adjustment → 📄 44
4	Set the output current to "Fixed" 4.0 mA via the "Current Mode" parameter. Menu path: Expert → Communication → HART config
5	Perform level adjustment (wet or dry)
6	Configure an address ≠0 using the "Bus address" parameter, e.g. bus address = 1. (HART 5.0 master: Range 0 to 15, where address = 0 calls up the "Signaling" setting; HART 6.0 master: Range 0 to 63) Menu path: Expert → Communication → HART config ℹ The output current of the temperature head transmitter used must also be set to "Fixed" and have a HART address other than zero (e.g. address = 2).
7	Switch on burst mode via the "Burst mode" parameter. Menu path: Expert → Communication → HART config
8	Result: by balancing the pressure signal and temperature signal in a suitable HART master (e.g. PLC), a corrected level value can be determined for any medium by using a suitable density function.

9.10.3 Automatic density compensation using an external temperature signal for calculation in the FMX21

Example:

In this example, the FMX21 with an integrated Pt100 is connected to a HART-compliant temperature transmitter via the common communication bus. With this option, the signal of the Pt100 is evaluated with a HART-compliant temperature head transmitter (min. HART 5.0) that supports the burst mode. The change in the water density caused by changing temperatures is automatically factored into the level signal by activating the automatic density compensation.

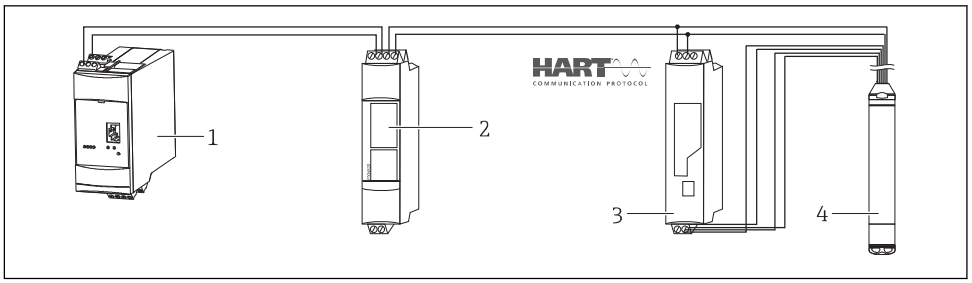

1 *Fieldgate FXA520*
2 *Multidrop Connector FXN520*
3 *HART-compatible temperature transmitter (e.g. TMT82)*
4 *Waterpilot FMX21*

	Configuring the HART-compliant temperature head transmitter (min. HART 5.0) with burst function
	The output current of the temperature transmitter used should be set to "Fixed" and a HART address other than zero (e.g. address = 1) must be set. The burst function must then be switched on with HART command 1. This step should be performed before the procedure described below in order to avoid a HART input error of the FMX21 being output during commissioning.
1	Select the "Level" measuring mode via the "Measuring mode" parameter. Menu path: Setup → Measuring mode **⚠ WARNING** **Changing the measuring mode affects the span (URV)** This situation can result in product overflow. ► If the measuring mode is changed, the setting for the span (URV) must be checked in the "Setup" operating menu and readjusted if necessary.
2	Select a pressure unit via the "Press eng. unit" parameter, here "mbar" for example. Menu path: Setup → Press. eng. unit
3	The sensor is unpressurized, perform a position adjustment → 📄 44
4	Set the "Auto dens. corr." parameter to "External value". Menu path: Expert → Application
5	Perform level adjustment (wet or dry)
	Result: The measured value output by the Waterpilot corresponds to the level in the deep well corrected by means of the density characteristic line of water.

The TMT182 temperature head transmitter is not suitable for this configuration.

9.11 Linearization

9.11.1 Semi-automatic entry of a linearization table

Example:

In this example, the volume in a tank with a conical outlet should be measured in m^3.

Prerequisite:

- The tank can be filled or emptied. The linearization characteristic must rise or fall continuously.
- The "Level" measuring mode has been selected.
- A level calibration has been performed.
- For a description of the parameters mentioned, see the "Description of device parameters" section→ 86.

WARNING

Changing the measuring mode affects the span (URV)

This situation can result in product overflow.

▶ If the measuring mode is changed, the setting for the span (URV) must be checked in the "Setup" operating menu and readjusted if necessary.

	Description	
1	Select the "Semiautom. entry" option via the "Lin. mode" parameter. Menu path: Setup → Extended setup → Linearization → Lin. mode	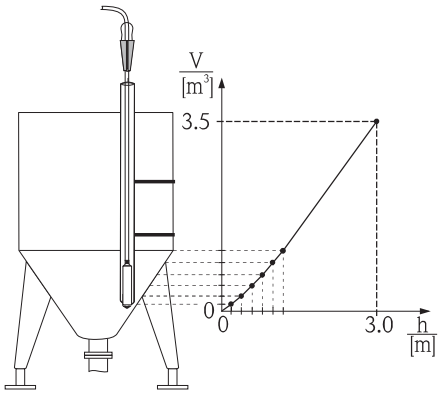 A0018843
2	Select using the "Unit before lin." e.g. m^3. Menu path: Setup → Extended setup → Linearization → Unit after lin.	
3	Fill the tank to the height of the 1st point.	
4	Enter the number of the point in the table using the "Line-numb" parameter e.g. 1. Menu path: Setup → Extended setup → Linearization → Line numb	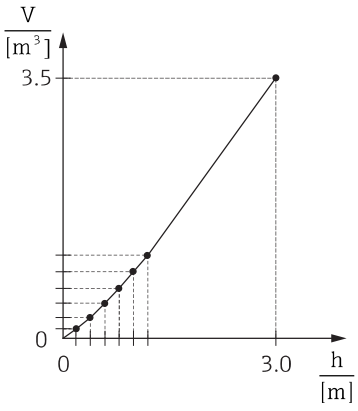 A0031098
	The current level is displayed via the "X-value" parameter. Menu path: Setup → Extended setup → Linearization → X-val	
	Using the "Y-val." parameter, enter the corresponding volume value, here 0 m^3 for example, and confirm the value. Menu path: Setup → Extended setup → Linearization → Y-val	
5	To enter another point in the table, continue filling the tank and select the "Next point" option via the "Edit table" parameter. Enter the next point as explained in Step 4. Menu path: Setup → Extended setup → Linearization → Edit table	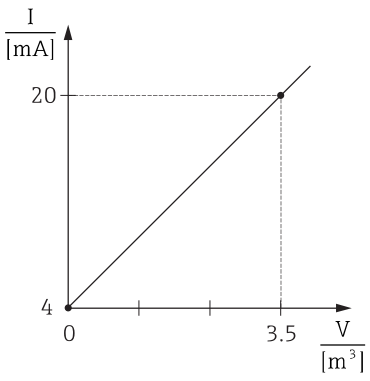 A0031031

	Description	
6	Once all the points have been entered in the table, select the "Activate table" option via the "Lin. mode" parameter. Menu path: Setup → Extended setup → Linearization → Lin. mode	
7	Result: Result: The measured value after linearization is displayed.	

- Error message F510 "Linearization" and alarm current as long as the table is being entered and until the table is activated.
- The lower-range value (= 4mA) is defined by the smallest point in the table. The upper-range value (= 20mA) is defined by the largest point in the table.
- Using the parameters "Set LRV" and "Set URV", you can change the allocation of the volume/mass values to the current values.

9.11.2 Manual entry of a linearization table

Example:

In this example, the volume in a tank with a conical outlet should be measured in m^3.

Prerequisite:

- This is a theoretical calibration, i.e. the points for the linearization table are known.
- The "Level" measuring mode has been selected.
- A level calibration has been performed.
- The linearization characteristic must rise or fall continuously.
- For a description of the parameters mentioned, see the "Description of device parameters" section→ 86.

WARNING

Changing the measuring mode affects the span (URV)

This situation can result in product overflow.

► If the measuring mode is changed, the setting for the span (URV) must be checked in the "Setup" operating menu and readjusted if necessary.

	Description	
1	Select the "Manual entry" option via the "Lin. mode" parameter. Menu path: Setup → Extended setup → Linearization → Lin. mode	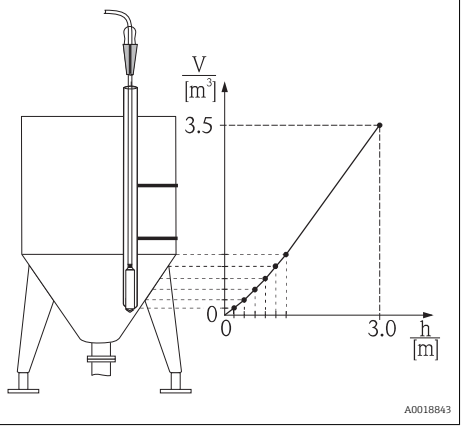
2	Select using the "Unit after lin." e.g. m^3. Menu path: Setup → Extended setup → Linearization → Unit after lin.	

	Description	
3	Enter the number of the point in the table using the "Line-numb" parameter e.g. 1. Menu path: Setup → Extended setup → Linearization → Line numb	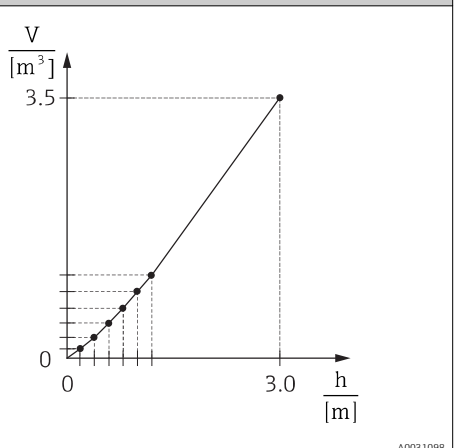 A0031098 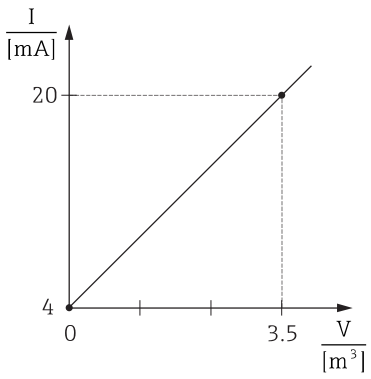 A0031031
	The level is entered via the "X-value" parameter, here 0 m for example. Confirm your entry. Menu path: Setup → Extended setup → Linearization → X-val	
	Using the "Y-val." parameter, enter the corresponding volume value, here 0 m^3 for example, and confirm the value. Menu path: Setup → Extended setup → Linearization → Y-val	
4	To enter another point in the table, select the "Next point" option via the "Edit table" parameter. Enter the next point as explained in Step 3. Menu path: Setup → Extended setup → Linearization → Edit table	
5	Once all the points have been entered in the table, select the "Activate table" option via the "Lin. mode" parameter. Menu path: Setup → Extended setup → Linearization → Lin. mode	
6	Result: Result: The measured value after linearization is displayed.	

- Error message F510 "Linearization" and alarm current as long as the table is being entered and until the table is activated.
- Error message F511/F512 "Linearization" and alarm current as long as the linearization table consists of fewer than 2 points.
- The lower-range value (= 4mA) is defined by the smallest point in the table. The upper-range value (= 20mA) is defined by the largest point in the table.
- Using the parameters "Set LRV" and "Set URV", you can change the allocation of the volume/mass values to the current values.

9.12 Manual entry of a linearization table via operating tool

Using an operating tool based on FDT technology (e.g. FieldCare), you can enter linearization using a module specially designed for this purpose. This provides you with an overview of the selected linearization, even during entry. In addition, it is possible to configure different tank shapes in FieldCare ("Device operation" → "Device functions" → "Additional functions" → "Linearization table" menu).

The linearization table may also be entered manually point by point in the operating tool menu (see Section → 86).

9.13 Backing up or duplicating the device data

The following options are available to you with an operating tool that is based on FDT technology (e.g. FieldCare):
- Storage/recovery of configuration data.
- Duplication of device parameters.
- Transfer of all relevant parameters when replacing electronic inserts.

Use the following parameter for this:

Download select. (visible only in FieldCare)

Navigation Expert → System → Management → Download select.

Write permission Operator/Service engineers/Expert

Description Selection of data packages for up/download function in Fieldcare and PDM.

Prerequisite DIP switch set to "SW" and "Damping" set to "on". If you download using the factory setting "Configuration copy", all parameters required for a measurement will be downloaded. The functionality of the "Electronics replace" setting is reserved for Endress+Hauser Service and can be accessed only if the correct device access code is entered.

Options
- Configuration copy: This option overwrites general configuration parameters with the exception of the serial number, order number, calibration, pos. zero adjust, application and day information.
- Device replacement: This option overwrites general configuration parameters with the exception of the serial number, order number, calibration and position adjustment.
- Electronics replace: This option overwrites general configuration parameters.

Factory setting Configuration copy

9.14 Operation and settings via RIA15

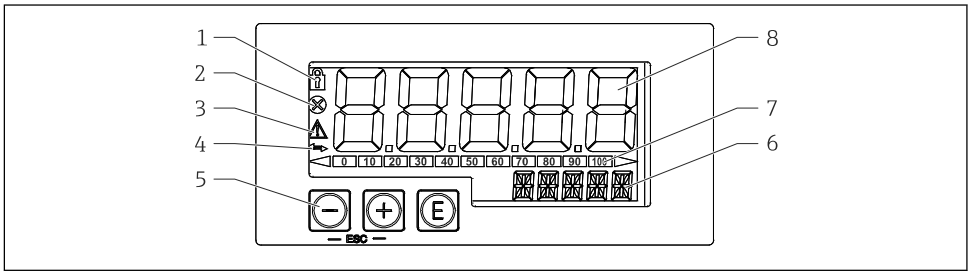

6 Display and operating elements of the process display unit

1 Symbol: operating menu disabled
2 Symbol: error
3 Symbol: warning
4 Symbol: HART communication active
5 Operating keys "-", "+", "E"
6 14-segment display for unit/TAG
7 Bar graph with indicators for under range and over range
8 5-digit 7-segment display for measured value, digit height 17 mm (0.67 in)

The device is operated using three operating keys on the front of the housing. The device setup can be disabled with a 4-digit user code. If the setup is disabled, a padlock symbol appears on the display when an operating parameter is selected.

 A0017716	Enter key; calling up the operating menu, confirming the option/setting parameters in the operating menu
 A0017715	Selecting and setting/changing values in the operating menu; pressing the '-' and '+' keys simultaneously takes the user back up a menu level. The configured value is not saved.
 A0017714	

9.14.1 Operating functions

The operating functions of the process display unit are divided into the following menus. The individual parameters and settings are described in the "Commissioning" section.



If the operating menu is disabled by means of a user code, the individual menus and parameters can be displayed but not changed. To change a parameter, the user code must be entered. As the display unit can only display digits in the 7-segment display and not alphanumeric characters, the procedure for number parameters is different to that for text parameters. If the operating position contains only numbers as parameters, the operating position is displayed in the 14-segment display and the configured parameter is displayed in the 7-segment display. To edit, press the 'E'-button followed by the user code. If the operating position contains text parameters, only the operating position is initially displayed in the 14-segment display. If the 'E' button is pressed again, the configured parameter is displayed in the 14-segment display. To edit, press the '+' button followed by the user code.

Setup (SETUP)	Basic device settings
Diagnostics (DIAG)	Device information, display of error messages
Expert (EXPRT)	Expert settings for device setup. The Expert menu is protected from editing by an access code (default 0000).

9.14.2 Operating modes

The process display unit can be used in two different operating modes:

- 4 to 20 mA mode:
  In this operating mode, the process display unit is incorporated into the 4 to 20 mA current loop and measures the transmitted current. The variable calculated based on the current value and range limits is displayed in digital form on the 5-digit LCD. In addition, the associated unit and a bar graph can be displayed.
- HART mode:
  The display unit is powered via the current loop.
  The FMX21 can be adjusted under the "Level" menu (see operating matrix). The measured value displayed corresponds to the measured level.
  HART communication operates according to the master/slave principle.

For additional information, see BA01170K.

9.14.3 Operating matrix

After power-up:

- ▶ Press the E key twice
  - ↳ The "Level" menu is then available

Using the following operating matrix, a display in percent can be set. To do this, select "Mode" parameter => 4-20 and "Unit" parameter =>%

Setup -> Level (LEVEL) menu					
The LEVEL menu is only visible if the RIA15 has been ordered with the "Level" option and the display unit is operated in the HART mode (MODE = HART). The basic settings for the Waterpilot FMX21 level sensor can be made via the RIA15 with this menu.					
RIA15 parameter		**Corresponds to parameter of FMX21**	**Values (default=bold)**	**Visible with**	**Description**
LEVEL [1]		Level before linearization		Level option MODE = HART FMX21 connected	This menu contains the parameters for configuring the pressure measuring device for hydrostatic level measurement, FMX21. The basic settings for the FMX21 can be made via the RIA15 with this menu. Once the LEVEL menu item is opened, the following parameters are automatically adjusted for easier operation: ▪ Measuring mode: Level ▪ Calibration mode: Dry ▪ Level selection: In pressure ▪ Lin mode: Linear It is possible to reset these parameters to the factory default settings by performing a reset.
	PUNIT	Press. eng. unit	**mbar** [2] **bar** [2] kPa PSI		Use this function to select the unit for pressure
	LUNIT	Output unit	**%** m inch feet		Use this function to select the unit for level
	TUNIT	Temperature unit	**°C** °F K		Use this function to select the unit for temperature
	ZERO	Pos. zero adjust	**NO** YES	Gauge pressure sensor	For performing a position adjustment (gauge pressure sensor). The value 0.0 is assigned to the pressure value present. The current value is also corrected.
	P_LRV	Empty pressure	-1999.9 to 9999.9 Default: Gauge pressure sensor: Sensor LRL Absolute pressure sensor: 0		Pressure empty calibration using keys -,+,E More in-depth description / valid value range: any value in the range indicated [1] [3] Number of decimal places depends on the configured pressure unit.
	P_URV	Full pressure	-1999.9 ... 9999.9 Default: Sensor URL		Pressure full calibration using keys -,+,E More in-depth description / valid value range: any value in the range indicated [1] [3] Number of decimal places depends on the configured pressure unit.
	EMPTY	Empty calib.	-1999.9 to 9999.9 Default: 0		Level empty calibration using keys -,+, E More in-depth description / valid value range: any value in the range indicated [1] [3] Number of decimal places depends on the configured level unit.
	FULL	Full calib.	-1999.9 ... 9999.9 Default: 100		Level full calibration using keys -,+, E More in-depth description / valid value range: any value in the range indicated [1] [3] Number of decimal places depends on the configured level unit.

Setup -> Level (LEVEL) menu					
The LEVEL menu is only visible if the RIA15 has been ordered with the "Level" option and the display unit is operated in the HART mode (MODE = HART). The basic settings for the Waterpilot FMX21 level sensor can be made via the RIA15 with this menu.					
RIA15 parameter		**Corresponds to parameter of FMX21**	**Values (default=bold)**	**Visible with**	**Description**
	LEVEL	Level before linearization	Measured value		Displays the measured level Number of decimal places depends on the configured level unit.
	RESET	Enter reset code	**NO** YES		Reset the FMX21 to factory defaults

1) If the measured value that is read out is too large, it is displayed as "9999.9", for example. To display a valid measured value, the pressure unit (PUNIT) (or level unit (LUNIT)) must be set to suit the measuring range.
2) Default: depends on the sensor nominal range or as per order specifications
3) The values entered for "Empty calib./Full calib.", "Empty pressure/Full pressure" and "Set LRV/Set URV" must be at least 1% apart. The value will be rejected, and a message displayed, if the values are too close together. Further limit values are not checked, i.e. the values entered must be appropriate for the sensor module and the measuring task for the device to be able to measure correctly.

Any additional settings such as linearizations must be made using FieldCare or DeviceCare.

Additional information is available in the RIA15 Operating Instructions BA01170K.

10 Diagnostics and troubleshooting

10.1 Troubleshooting

General errors

Error	Possible cause	Solution
Device is not responding.	Supply voltage does not match the specification on the nameplate.	Apply correct voltage.
	Supply voltage has incorrect polarity.	Reverse polarity of supply voltage.
	Connecting cables are not in contact with the terminals.	Check the connection of the cables and correct if necessary.
Output current < 3.6 mA	Signal line is not wired correctly. Electronics unit is defective.	Check wiring.
Device measures incorrectly.	Configuration error.	Check and correct parameter configuration (see below).
HART communication is not working.	Communication resistor missing or incorrectly installed.	Install the communication resistor (250 Ω) correctly.
	Commubox is connected incorrectly.	Connect Commubox correctly.
	Commubox is not set to "HART".	Set Commubox selector switch to "HART".
RIA15 no display	The polarity of the supply voltage is wrong	Correct the polarity
RIA15 no display	The cables do not contact the terminals properly	Ensure electrical contact between the cable and the terminal
RIA15 no display	RIA15 defective	Replace RIA15
RIA15 start sequence keeps running through	Supply voltage too low	▪ Increase supply voltage ▪ Switch off backlight

10.2 Diagnostic events in the operating tool

10.2.1 Diagnostic message

Faults detected by the self-monitoring system of the measuring device are displayed as a diagnostic message in alternation with the measured value display.

Status signals

The table → 📄 71 lists the messages that may occur. The ALARM STATUS parameter shows the message with the highest priority. The device has four different status information codes according to NE107:

F A0013956	**"Failure"** A device error has occurred. The measured value is no longer valid.
M A0013957	**"Maintenance required"** Maintenance is required. The measured value remains valid.
C A0013959	**"Function check"** The device is in service mode (e.g. during a simulation).
S A0013958	**"Out of specification"** The device is being operated: ▪ Outside its technical specifications (e.g. during warm-up or cleaning). ▪ Outside of the configuration carried out by the user (e.g. level outside configured span)

Diagnostic event and event text

The fault can be identified by means of the diagnostic event.

The event text helps you by providing information on the fault.

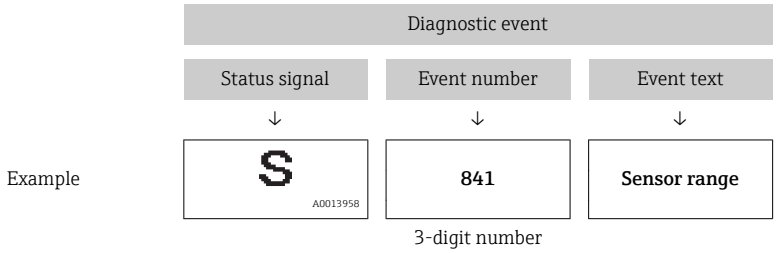

If two or more diagnostic events are pending simultaneously, only the diagnostic message with the highest priority is shown.

Other diagnostic messages that are pending can be viewed in the **Diagnostic list** submenu → 120.

Past diagnostic messages that are no longer pending are shown in the **Event logbook** submenu→ 121.

10.2.2 Diagnostic event in the RIA15

A diagnostic event of the Waterpilot FMX21 is not directly shown in the RIA15. The fault F911 only appears directly on the RIA15 in the event of an Waterpilot FMX21 alarm.

Displaying a FMX21 diagnostic event in the RIA15

1. Navigate to: DIAG/TERR
2. Press E
3. Press +
4. Press E
5. Press + 3 times
6. Press E
   ↳ The diagnostic event from the Waterpilot FMX21 is shown on the RIA15 display.

10.2.3 List of diagnostic events

General messages

Diagnostic event		Reason	Corrective measure
Code	Description		
0	No error	-	-

"F" messages

Diagnostic event		Reason	Corrective measure
Code	Description		
F002	Sensor unknown	Sensor does not suit the device (electronic sensor nameplate).	Contact Endress+Hauser Service
F062	Sensor conn.	▪ Faulty sensor. ▪ Electromagnetic effects are greater than specifications in the technical data. This message appears for a short time only.	▪ Check the sensor module cable ▪ Contact Endress+Hauser Service
F081	Initialization	▪ Faulty sensor. ▪ Electromagnetic effects are greater than specifications in the technical data. This message appears for a short time only.	▪ Check sensor cable ▪ Contact Endress+Hauser Service
F083	Memory content	▪ Faulty sensor. ▪ Electromagnetic effects outside the permitted range. This message appears for a short time only.	▪ Restart the device ▪ Contact Endress+Hauser Service
F140	Working range P	▪ Overpressure and low pressure present. ▪ Electromagnetic effects outside the permitted range. ▪ Faulty sensor.	▪ Check the process pressure ▪ Check sensor range
F261	Electronic module	▪ Main electronics defective. ▪ Fault in the main electronics.	Restart the device
F282	Memory	▪ Fault in the main electronics. ▪ Main electronics defective.	Restart the device
F283	Memory content	▪ Main electronics defective. ▪ Electromagnetic effects are greater than specifications in the technical data. ▪ The supply voltage is disconnected when writing. ▪ An error occurred when writing.	Perform a reset
F411	Up-/download	▪ File is defective. ▪ During the download, the data are not correctly transmitted to the processor, e.g. because of open cable connections, spikes (ripple) on the supply voltage or electromagnetic effects.	▪ Repeat download ▪ Use other file ▪ Perform a reset
F510	Linearization	The linearization table is being edited.	▪ Conclude entries ▪ Select "linear"
F511	Linearization	The linearization table consists of less than 2 points.	▪ Table too small ▪ Correct table ▪ Activate table
F512	Linearization	The linearization table is not monotonic increasing or decreasing.	▪ Table not monotonic ▪ Correct table ▪ Activate table
F841	Sensor range	▪ Overpressure or low pressure present. ▪ Faulty sensor.	▪ Check the pressure value ▪ Contact Endress+Hauser Service
F882	Input signal	External measured value is not received or displays a failure status.	▪ Check the bus ▪ Check source device ▪ Check the setting

"M" messages

Diagnostic event		Reason	Corrective measure
Code	Description		
M002	Sens. unknown	Sensor does not suit the device (electronic sensor nameplate). Device continues measuring.	Contact Endress+Hauser Service
M283	Memory content	▪ Cause as indicated for F283. ▪ Correct measurement can continue as long as you do not need the peakhold indicator function.	Perform a reset
M431	Adjustment	The calibration performed would cause the sensor nominal range to be exceeded or undershot.	▪ Check the measuring range ▪ Check position adjustment ▪ Check the setting
M434	Scaling	▪ Values for calibration (e.g. lower range value and upper range value) are too close together. ▪ Lower-range value and/or upper-range value exceed or fall below the range limits of the sensor. ▪ The sensor was replaced and the customer-specific configuration does not suit the sensor module. ▪ Unsuitable download carried out.	▪ Check the measuring range ▪ Check the setting ▪ Contact Endress+Hauser Service
M438	Data set	▪ The supply voltage is disconnected when writing. ▪ An error occurred when writing.	▪ Check the setting ▪ Restart the device
M882	Input signal	External measured value displays a warning status.	▪ Check the bus ▪ Check the source device ▪ Check the setting

"C" messages

Diagnostic event		Reason	Corrective measure
Code	Description		
C412	Backup in prog.	Downloading.	Wait for download to complete.
C482	Simul. output	Simulation of the current output is switched on, i.e. the device is not measuring at present.	End the simulation
C484	Error simul.	Fault state simulation is switched on, i.e. the device is not measuring at present.	End the simulation
C485	Measure simul.	Simulation is switched on, i.e. the device is not measuring at present.	End the simulation
C824	Process pressure	▪ Overpressure or low pressure present. ▪ Electromagnetic effects outside the permitted range. This message appears for a short time only.	▪ Check the pressure value ▪ Restart the device ▪ Perform a reset

"S" messages

Diagnostic event		Reason	Corrective measure
Code	Description		
S110	Operational range T	▪ High temperature or low temperature present. ▪ Electromagnetic effects outside the permitted range. ▪ Faulty sensor.	▪ Check process temperature ▪ Check the temperature range
S140	Working range P LP/HP	▪ Overpressure or low pressure present. ▪ Electromagnetic effects outside the permitted range. ▪ Faulty sensor.	▪ Check the process pressure ▪ Check sensor range

Diagnostic event		Reason	Corrective measure
Code	Description		
S822	Process temp. LP/HP	▪ The temperature measured in the sensor is higher than the upper nominal temperature of the sensor. ▪ The temperature measured in the sensor is lower than the lower nominal temperature of the sensor.	▪ Check temperature ▪ Check the setting
S841	Sensor range	▪ Overpressure or low pressure present. ▪ Faulty sensor.	▪ Check the pressure value ▪ Contact Endress+Hauser Service
S971	Adjustment	▪ The current is outside the permitted range from 3.8 to 20.5 mA. ▪ The present pressure value is outside the configured measuring range (but within the sensor module range, if applicable). ▪ The calibration performed would cause the sensor nominal range to be exceeded or undershot.	▪ Check the pressure value ▪ Check the measuring range ▪ Check the setting

10.3 Troubleshooting specific to Waterpilot FMX21 with optional Pt100

Error description	Reason	Corrective action
No measuring signal	4 to 20 mA cable not connected correctly	Connect device as per → 📄 26.
	No power supplied via the 4 to 20 mA cable	Check current loop.
	Supply voltage too low (min. 10.5 V DC)	▪ Check supply voltage. ▪ Overall resistance greater than max. load resistance
	Waterpilot is defective	Replace the Waterpilot.
Temperature measured value is inaccurate/incorrect (only for Waterpilot FMX21 with Pt100)	Pt100 connected in 2-wire circuit, cable resistance was not compensated for	▪ Compensate the cable resistance. ▪ Connect Pt100 as 3-wire or 4-wire circuit.

10.4 Troubleshooting specific to TMT182 temperature head transmitter

Error description	Reason	Corrective action
No measuring signal	4 to 20 mA cable not connected correctly	Connect device as per → 📄 26.
	No power supplied via the 4 to 20 mA cable	Check current loop.
	Supply voltage too low (min. 10.5 V DC)	▪ Check supply voltage. ▪ Overall resistance greater than max. load resistance
Failure current ≤ 3.6 mA or ≥ 21 mA	Pt100 not connected correctly	Connect device as per → 📄 26.
	4 to 20 mA cable not connected correctly	Connect device as per → 📄 26.
	Pt100 resistance thermometer defective	Replace the Waterpilot.

Error description	Reason	Corrective action
	Temperature head transmitter defective	Replace the temperature head transmitter.
Measured value is inaccurate/ incorrect	Pt100 connected in 2-wire circuit, cable resistance was not compensated for (for more information see BA00139R)	▪ Compensate the cable resistance. ▪ Connect Pt100 as 3-wire or 4-wire circuit.

10.5 Response of output to errors

The behavior of the current output in case of fault is defined by the following parameters:

- "Alarm behav. P (050)"
- "Output fail mode (190)"
- "Max. alarm curr. (052)"

10.6 Firmware history

Date	Firmware version	Modifications	Documentation
05.2009	01.00.zz	Original firmware.	BA00380P/00/EN/03.09
		Compatible with: ▪ FieldCare version 2.02.00 and higher ▪ Field Communicator DXR375 with Device Rev.: 1, DD Rev.: 1	BA00380P/00/EN/07.09
			BA00380P/00/EN/08.09
			BA00380P/00/EN/13.11
			BA00380P/00/EN/14.13
			BA00380P/00/EN/15.15
			BA00380P/00/EN/16.16
			BA00380P/00/EN/17.16
			BA00380P/00/EN/18.18

11 Maintenance

- Terminal box: Keep the GORE-TEX® filter free from contamination
- FMX21 extension cable: Keep the Teflon filter in the pressure compensation tube free from contamination
- Check the process isolating diaphragm for buildup at suitable intervals.

11.1 Exterior cleaning

Please note the following points when cleaning the device:

- The cleaning agents used should not corrode the surface and the seals.
- Mechanical damage to the process isolating diaphragm, e.g. due to sharp objects, must be avoided.
- Only clean the terminal box with water or with a cloth dampened with very diluted ethanol.

12 Repairs

12.1 General notes

12.1.1 Repair concept

Repairs are not possible.

12.1.2 Replacing a device

Once a complete device has been replaced, the parameters can be transferred back into the device using FieldCare:

Prerequisite: The configuration of the old device was saved previously to the computer using FieldCare.

You can continue to measure without performing a new calibration.

12.2 Spare parts

All the spare parts for the measuring device along with the order code are listed In the *W@M Device Viewer* (www.endress.com/deviceviewer) and can be ordered. If available, users can also download the associated Installation Instructions.

Measuring device serial number:
- Is located on the nameplate of the device.
- Can be read out via the "Serial number" parameter in the "Instrument info" submenu.

12.3 Return

The measuring device must be returned in the event of a factory calibration, or if the wrong device has been ordered or delivered.

As an ISO-certified company and also due to legal regulations, Endress+Hauser is obliged to follow certain procedures when handling any returned products that have been in contact with medium. To ensure swift, safe and professional device returns, please read the return procedures and conditions on the Endress+Hauser website at www.services.endress.com/return-material

▶ Select country.
  ↳ The web site of the responsible sales office opens with all of the relevant information relating to returns.

1. If the desired country is not listed:
   Click on the "Choose your location" link.
   ↳ An overview of Endress+Hauser sales offices and representatives opens.
2. Contact your Endress+Hauser sales office or representative.

12.4 Disposal

When disposing, separate and recycle the device components based on the materials.

13 Overview of the operating menu

Depending on the parameter configuration, not all submenus and parameters are available. Information on this can be found in the parameter description under "Prerequisite".

Setup	Description
Operating mode	→ 89
Press. eng. unit	→ 91
Corrected press.	→ 93
Pos. zero adjust (relative pressure sensor)	→ 90
Calib. offset (absolute pressure sensor)	→ 90
Empty calib. ("Level" measuring mode and "Calibration mode" = wet)	→ 95
Full calib. ("Level" measuring mode and "Calibration mode" = wet")	→ 96
Set LRV ("Pressure" measuring mode)	→ 92
Set URV ("Pressure" measuring mode)	→ 92
Damping	→ 90
Level before Lin ("Level" measuring mode)	→ 98
Pressure af.damp	→ 93

Setup →	Extended setup	Description
	Code definition	→ 86
	Device tag	→ 87
	Operator code	→ 86

Setup →	Extended setup →	Level ("Level" measuring mode)	Description
		Level selection	→ 94
		Output unit	→ 94
		Height unit	→ 94
		Calibration mode	→ 95
		Empty calib.	→ 95
		Empty pressure	→ 95
		Empty height	→ 96
		Full calib.	→ 96
		Full pressure	→ 96
		Full height	→ 97
		Adjust density	→ 97
		Process density	→ 98
		Level before lin	→ 98

Setup →	Extended setup →	Linearization	Description
		Lin. mode	→ 99
		Unit after lin.	→ 99
		Line-numb:	→ 99

Setup →	Extended setup →	Linearization	Description
		X-val	→ 100
		Y-val	→ 100
		Edit table	→ 100
		Tank description	→ 101
		Tank content	→ 101

Setup →	Extended setup →	Current output	Description
		Alarm behav. P	→ 104
		Output fail mode	→ 104
		Max. alarm curr.	→ 104
		Set min. current	→ 105
		Output current	→ 104
		Get LRV (only "Pressure")	→ 105
		Set LRV	→ 105
		Get URV (only "Pressure")	→ 105
		Set URV	→ 106

Diagnosis	Description
Diagnostic code	→ 118
Last diag. code	→ 118
Min. meas. press.	→ 118
Max. meas. press.	→ 118

Diagnosis →	Diagnostics List	Description
	Diagnostic 1	→ 120
	Diagnostic 2	→ 120
	Diagnostic 3	→ 120
	Diagnostics 4	→ 120
	Diagnostics 5	→ 120
	Diagnostics 6	→ 120
	Diagnostics 7	→ 120
	Diagnostics 8	→ 120
	Diagnostics 9	→ 120
	Diagnostics 10	→ 120

Diagnosis →	Event logbook	Description
	Last diag. 1	→ 121
	Last diag. 2	→ 121
	Last diag. 3	→ 121
	Last diag. 4	→ 121
	Last diag. 5	→ 121
	Last diag. 6	→ 121

Diagnosis →	Event logbook	Description
	Last diag. 7	→ 121
	Last diag. 8	→ 121
	Last diag. 9	→ 121
	Last diag. 10	→ 121

Diagnosis →	Instrument Info	Description
	Firmware Version	→ 87
	Serial number	→ 87
	Ext. order code	→ 87
	Order Identifier	→ 88
	Cust. tag number	→ 87
	Device tag	→ 87
	ENP version	→ 88
	Config. counter	→ 119
	LRL sensor	→ 102
	URL sensor	→ 102
	Manufacturer ID	→ 110
	Device type code	→ 110
	Device revision	→ 110

Diagnosis →	Measured values	Description
	Level before lin	→ 98
	Tank content	→ 101
	Pressure measured	→ 92
	Sensor pressure	→ 92
	Corrected press.	→ 93
	Pressure af.damp	→ 93
	Sensor temp.	→ 91

Diagnosis →	Simulation	Description
	Simulation mode	→ 122
	Sim. pressure	→ 122
	Sim. level	→ 122
	Sim. tank cont.	→ 123
	Sim. current	→ 123
	Sim. alarm/warning	→ 123

Diagnosis →	Enter reset code	Description
	Enter reset code	→ 89

13.1 Overview of parameters in the "Expert" menu

The following table lists all of the parameters that can be included in the "Expert" menu. The page reference indicates where a description of the parameter can be found in the manual.

Depending on the device version and the parameter configuration, not all submenus and parameters are available in every device. Information on this can be found in the parameter description under "Prerequisite".

Expert →	System	Description
	Code definition	→ 86
	Operator code	→ 86

Expert →	System→	Instrument Info	Description
		Cust. tag number	→ 87
		Device tag	→ 87
		Serial number	→ 87
		Firmware Version	→ 87
		Ext. order code	→ 87
		Order Identifier	→ 88
		ENP version	→ 88
		Electr.Serial No	→ 88
		Sensor serial no.	→ 88

Expert →	System→	Administration	Description
		Enter reset code	→ 89

Expert →	Measurement	Description
	Operating mode	→ 89

Expert →	Measurement→	Basic Setup	Description
		Pos. zero adjust	→ 90
		Calib. Offset	→ 90
		Damping	→ 90
		Press. eng. unit	→ 91
		Temp. Eng. Unit	→ 91
		Sensor temp.	→ 91

Expert →	Measurement→	Pressure	Description
		Set LRV	→ 92
		Set URV	→ 92
		Pressure measured	→ 92
		Sensor pressure	→ 92
		Corrected press.	→ 93
		Pressure af.damp	→ 93

Expert →	Measurement→	Level	Description
		Level selection	→ 94
		Output unit	→ 94
		Height unit	→ 94
		Calibration mode	→ 95
		Empty calib.	→ 95
		Empty pressure	→ 95
		Empty height	→ 96
		Full calib.	→ 96
		Full pressure	→ 96
		Full height	→ 97
		Density unit	→ 97
		Adjust density	→ 97
		Process density	→ 98
		Level before lin.	→ 98

Expert →	Measurement→	Linearization	Description
		Lin. mode	→ 99
		Unit after lin.	→ 99
		Line-numb:	→ 99
		X-val	→ 100
		Y-val	→ 100
		Edit table	→ 100
		Tank description	→ 101
		Tank content	→ 101

Expert →	Measurement→	Sensor limits	Description
		Lower range limit	→ 102
		URL sensor	→ 102

Expert →	Measurement→	Sensor trim	Description
		Lo trim measured	→ 103
		Hi trim measured	→ 103
		Lo Trim Sensor	→ 103
		Hi Trim Sensor	→ 103

Expert →	Output→	Current output	Description
		Output current	→ 104
		Alarm behav. P	→ 104
		Output fail mode	→ 104
		Max. alarm curr.	→ 104
		Set min. current	→ 105

Expert →	Output→	Current output	Description
		Get LRV ("Pressure" only)	→ 105
		Set LRV	→ 105
		Get URV ("Pressure" only)	→ 105
		Set URV	→ 106
		Startcurrent	→ 106
		Curr. Trim 4 mA	→ 106
		Curr. Trim 20 mA	→ 107
		Offset Trim 4 mA	→ 107
		Offset Trim 20 mA	→ 107

Expert →	Communication→	HART Config	Description
		Burst Mode	→ 108
		Burst Option	→ 108
		Current Mode	→ 108
		Bus Address	→ 108
		Preamble Number	→ 109

Expert →	Communication→	HART Info	Description
		Device type code	→ 110
		Device revision	→ 110
		Manufacturer ID	→ 110
		HART version	→ 110
		Descriptor	→ 110
		HART Message	→ 110
		HART Date	→ 111

Expert →	Communication→	HART Output	Description
		Primary value is	→ 112
		Primary value	→ 112
		Secondary val. is	→ 112
		Secondary value	→ 112
		Third value is	→ 113
		Third value	→ 113
		4th value is	→ 113
		4th value	→ 114

Expert →	Communication→	HART Input	Description
		HART input val.	→ 115
		HART input stat.	→ 115

Expert →	Communication→	HART Input	Description
		HART input unit	→ 115
		HART input form.	→ 115

Expert →	Application		Description
		Electr. Delta P	→ 117
		Fixed ext. value	→ 117
		Auto dens. corr.	→ 117

Expert →	Diagnosis		Description
	Diagnostic code		→ 118
	Last diag. code		→ 118
	Reset Logbook		→ 118
	Min. meas. press.		→ 118
	Max. meas. press.		→ 118
	Reset Peakhold		→ 119
	Operating hours		→ 119
	Config. counter		→ 119

Expert →	Diagnosis→	Diagnostics List	Description
		Diagnostic 1	→ 120
		Diagnostic 2	→ 120
		Diagnostic 3	→ 120
		Diagnostics 4	→ 120
		Diagnostics 5	→ 120
		Diagnostics 6	→ 120
		Diagnostics 7	→ 120
		Diagnostics 8	→ 120
		Diagnostics 9	→ 120
		Diagnostics 10	→ 120

Expert →	Diagnosis→	Event logbook	Description
		Last diag. 1	→ 121
		Last diag. 2	→ 121
		Last diag. 3	→ 121
		Last diag. 4	→ 121
		Last diag. 5	→ 121
		Last diag. 6	→ 121
		Last diag. 7	→ 121
		Last diag. 8	→ 121
		Last diag. 9	→ 121
		Last diag. 10	→ 121

Expert →	Diagnosis→	Simulation	Description
		Simulation mode	→ 122
		Sim. pressure	→ 122
		Sim. level	→ 122
		Sim. tank cont.	→ 123
		Sim. current	→ 123
		Sim. alarm/warning	→ 123

14 Description of device parameters

14.1 Expert → System

Operator code

Write permission Operators/Service engineers/Expert

Description Use this function to enter a code to lock or unlock operation.

User entry
- To lock: Enter a number ≠ the release code (value range: 1 to 9999).
- To unlock: Enter the release code.

Note The release code is "0" in the order configuration. Another release code can be defined in the "Code definition" parameter. If the user has forgotten the release code, the release code can be visible by entering the number "5864".

Factory setting 0

Code definition

Write permission Operators/Service engineers/Expert

Description Use this function to enter a release code with which the device can be unlocked.

Options A number from 0 to 9999

Factory setting 0

14.2 Expert → System → Instrument info

Cust. tag number

Write permission Operators/Service engineers/Expert

Description Enter the device tag, e.g. TAG number (max. 8 alphanumeric characters).

Factory setting No entry or according to order specifications

Device tag

Write permission Operators/Service engineers/Expert

Description Enter the device tag, e.g. TAG number (max. 32 alphanumeric characters).

Factory setting No entry or according to order specifications

Serial number

Write permission Parameter is read only. Only Endress+Hauser Service has write permission.

Description Displays the serial number of the device (11 alphanumeric characters).

Firmware Version

Write permission No write permissions. Parameter is read only.

Description Displays the firmware version.

Ext. order code

Write permission Parameter is read only. Only Endress+Hauser Service has write permission.

Description Displays extended order number.

Factory setting According to order specifications

Order identifier

Write permission Parameter is read only. Only Endress+Hauser Service has write permission.

Description Displays the order identifier.

Factory setting According to order specifications

ENP version

Write permission No write permissions. Parameter is read only.

Description Displays the ENP version
(ENP = electronic nameplate)

Electr.serial no.

Write permission No write permissions. Parameter is read only.

Description Displays the serial number of the main electronics (11 alphanumeric characters).

Sensor serial no.

Write permission No write permissions. Parameter is read only.

Description Displays the serial number of the main electronics (11 alphanumeric characters).

14.3 Expert → System → Management

Enter reset code

Write permission Operators/Service engineers/Expert

Description Reset parameters completely or partially to the factory values or order configuration by entering a reset code, see "Resetting to factory settings (reset)" section.→ 39

Factory setting 0

14.4 Expert → Measurement → Measuring mode

Measuring mode

WARNING

Changing the measuring mode affects the span (URV)
This situation can result in product overflow.
- If the measuring mode is changed, the setting for the span (URV) must be checked in the "Setup" operating menu and readjusted if necessary.

Write permission Operators/Service engineers/Expert

Description Select the measuring mode. The operating menu is structured differently depending on the measuring mode selected.

Options
- Pressure
- Level

Factory setting Pressure or according to order specifications

14.5 Expert → Measurement → Basic setup

Pos. zero adjust

Write permission Operators/Service engineers/Expert

Description Position adjustment – the pressure difference between zero (set point) and the measured pressure need not be known.

Example
- Measured value = 2.2 mbar (0.033 psi)
- You correct the measured value via the "Pos. zero adjust" parameter with the "Confirm" option. This means that you are assigning the value 0.0 to the pressure present.
- Measured value (after position adjustment) = 0.0 mbar
- The current value is also corrected.

Options
- Confirm
- Cancel

Factory setting Cancel

Calib. offset

Write permission Service engineers/Expert

Description Position adjustment – the pressure difference between the set point and the measured pressure must be known.

Example
- Measured value = 982.2 mbar (14.73 psi)
- You correct the measured value with the value entered (e.g. 2.2 mbar (0.033 psi)) via the "Calib. Offset" parameter. This means that you are assigning the value 980.0 (14.7 psi) to the pressure present.
- Measured value (after pos. zero adjust) = 980.0 mbar (14.7 psi)
- The current value is also corrected.

Factory setting 0.0

Damping

Write permission Operators/Service engineers/Expert
(if the "Damping" DIP switch is set to "on")

Description Enter damping time (time constant τ).
The damping affects the speed at which the measured value reacts to changes in pressure.

Input range 0.0 to 999.0 s

Factory setting 2.0 sec. or according to order specifications

Press. eng. unit

Write permission
Operators/Service engineers/Expert

Description
Select the pressure engineering unit. If a new pressure engineering unit is selected, all pressure-specific parameters are converted and displayed with the new unit.

Options
- mbar, bar
- mmH2O, mH2O, inH2O
- ftH2O
- Pa, kPa, MPa
- psi
- mmHg, inHg
- kgf/cm^2

Factory setting
mbar or bar depending on the nominal measuring range of the sensor module, or as per order specifications

Temp. eng. unit

Write permission
Service engineers/Expert

Description
Select the unit for the temperature measured values.

Options
- °C
- °F
- K

Note
The setting affects the unit for the "Sensor temp." parameter.

Factory setting
°C

Sensor temp.

Write permission
No write permissions. Parameter is read only.

Description
Displays the temperature currently measured in the sensor module. This can deviate from the process temperature.

14.6 Expert → Measurement → Pressure

Set LRV

Write permission Operators/Service engineers/Expert

Description Set the pressure value, level or content for the lower current value (4 mA).

Factory setting
- 0.0 % in Level measuring mode
- 0.0 mbar/bar or in accordance with ordering information in Pressure measuring mode

Set URV

Write permission Operators/Service engineers/Expert

Description Set the pressure value, level or content for the upper current value (20 mA).

Factory setting
- 100.0 % in Level measuring mode
- URL Sensor or according to ordering information in Pressure measuring mode

Meas. pressure

Write permission No write permissions. Parameter is read only.

Description Displays the measured pressure after sensor trim, position adjustment and damping.

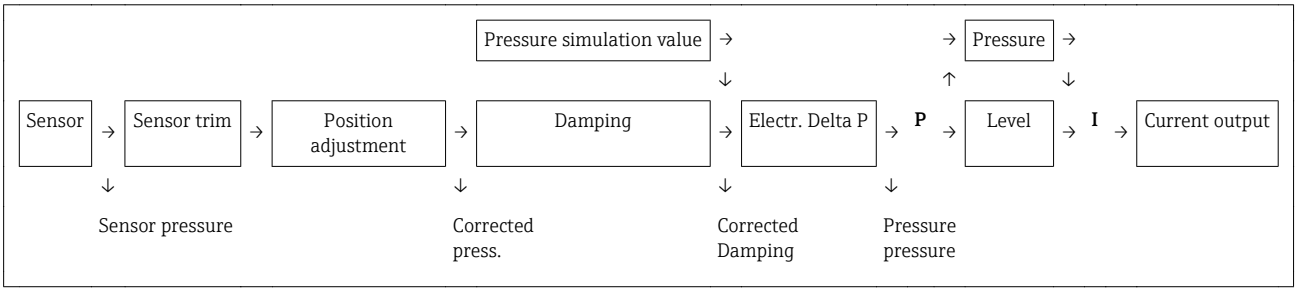

Sensor pressure

Write permission No write permissions. Parameter is read only.

Description Displays the measured pressure before the sensor trim.

Corrected press.

Write permission No write permissions. Parameter is read only.

Description Displays the measured pressure after sensor trim and position adjustment.

Pressure af.damp

Write permission No write permissions. Parameter is read only.

Description Displays the measured pressure after sensor trim, position adjustment and damping.

14.7 Expert → Measurement → Level

Level selection

Write permission Operators/Service engineers/Expert

Description Select the method for calculating the level

Options
- In pressure
  If this option is selected, specify two pressure/level value pairs. The level value is displayed directly in the unit that you select via the "Output unit" parameter.
- In height
  If this option is selected, specify two height/level value pairs. From the measured pressure, the device first calculates the height using the density. This information is then used to calculate the level in the "Output unit" selected using the two value pairs specified.

Factory setting In pressure

Output unit

Description Select the unit for the measured value display for the level before linearization.

Note The selected unit is used only to describe the measured value i.e. when a new output unit is selected, the measured value is not converted.

Example
- Current measured value: 0.3 ft
- New output unit: m
- New measured value: 0.3 m

Options
- %
- mm, cm, dm, m
- ft, inch
- m^3, in^3
- l, hl
- ft^3
- gal, Igal
- kg, t
- lb

Factory setting %

Height unit

Write permission Operators/Service engineers/Expert

Description Select the height unit. The measured pressure is converted to the selected height unit using the "Adjust Density" parameter.

Prerequisite "Level selection" = "In height"

Options
- mm
- m
- in
- ft

Factory setting m

Calibration mode

Write permission Operators/Service engineers/Expert

Description Select the calibration mode.

Options
- Wet
  Wet calibration takes place by filling and emptying the vessel. In the case of two different levels, the level, volume, mass or percentage value entered is assigned to the pressure measured at this point in time ("Empty calib." and "Full calib." parameters).
- Dry
  Dry calibration is a theoretical calibration. For this calibration, you specify two pressure-level value pairs or height-level value pairs via the following parameters: "Empty calib.", "Empty pressure", "Empty height", "Full calib.", "Full pressure", "Full height".

Factory setting Wet

Empty calib.

Write permission Operators/Service engineers/Expert

Description Enter the output value for the lower calibration point (vessel is empty). The unit defined in "Output unit" must be used.

Note
- In the case of wet calibration, the level (e.g. vessel empty or partially filled) must actually be available. The associated pressure is then automatically recorded by the device.
- In the case of dry calibration, the level (vessel empty) does not have to be available. For the "In pressure" level selection, the associated pressure must be entered in the "Empty pressure" parameter. The associated height must be entered in the "Empty height" parameter for the "In height" level selection.

Factory setting 0.0

Empty pressure

Write permission Operators/Service engineers/Expert

Description Enter the pressure value for the lower calibration point (vessel empty). See also "Empty calib.".

Prerequisite
- "Level selection" = In pressure
- "Calibration mode" = Dry -> entry
- "Calibration mode" = Wet -> display

Factory setting 0.0

Empty height

Write permission Operators/Service engineers/Expert

Description Enter the height value for the lower calibration point (vessel empty). The unit is selected via the "Height unit" parameter.

Prerequisite
- "Level selection" = "In height"
- "Calibration mode" = Dry -> entry
- "Calibration mode" = Wet -> display

Factory setting 0.0

Full calib.

Write permission Operators/Service engineers/Expert

Description Enter the output value for the upper calibration point (vessel full). The unit defined in "Output unit" must be used.

Note
- In the case of wet calibration, the level (e.g. vessel full or partially filled) must actually be available. The associated pressure is then automatically recorded by the device.
- In the case of dry calibration, the level (vessel full) does not have to be available. For the "In pressure" level selection, the associated pressure must be entered in the "Full pressure" parameter. The associated height has to be entered in the "Full height" parameter for the "In height" level selection.

Factory setting 100.0

Full pressure

Write permission Operators/Service engineers/Expert

Description Enter the pressure value for the upper calibration point (vessel full). See also "Full calib.".

Prerequisite
- "Level selection" = In pressure
- "Calibration mode" = Dry -> entry
- "Calibration mode" = Wet -> display

Factory setting URL of the sensor module

Full height

Write permission Operators/Service engineers/Expert

Description Enter the height value for the upper calibration point (vessel full). The unit is selected via the "Height unit" parameter.

Prerequisite
- "Level selection" = "In height"
- "Calibration mode" = Dry -> entry
- "Calibration mode" = Wet -> display

Factory setting URL is converted to a level unit

Density unit

Write permission Service engineers/Expert

Description Displays the density unit. The measured pressure is converted to a height using the "Height unit", "Adjust density" and "Process density" parameters.

Options
- g/cm^3
- kg/m^3
- kg/dm^3
- lb/in^3
- lb/ft^3

Factory setting g/cm^3

Adjust density

Write permission Operators/Service engineers/Expert

Description Enter the density of the medium used to perform the calibration. The measured pressure is converted to a height using the "Height unit" and "Adjust density" parameters.
Input: Auto dens. corr. = Off
Display: Auto dens. corr. ≠ Off

Factory setting 1.0

Process density

Write permission Operators/Service engineers/Expert

Description Enter a new density value for density correction. The calibration was carried out with the medium water, for example. Now the vessel is to be used for another medium with another density. The calibration is corrected appropriately by entering the new density value in the "Process Density" parameter.
Input: Auto dens. corr. = Off
Display: Auto dens. corr. ≠ Off

Note If, after completing a wet calibration, you change to dry calibration using the "Calibration mode" parameter, the density for the "Adjust density" and "Process density" parameters must be entered correctly before changing the calibration mode.

Factory setting 1.0

Level before lin.

Write permission No write permissions. Parameter is read only.

Description Displays the level value prior to linearization.

14.8 Expert → Measurement → Linearization

Lin. mode

Write permission Operators/Service engineers/Expert

Description Select the linearization mode.

Options
- Linear
  The level is output without being converted beforehand. "Level before lin" is output.
- Erase table
  The existing linearization table is deleted.
- Manual entry (sets the table to edit mode, an alarm is output):
  The value pairs of the table (X-value and Y-value) are entered manually.
- Semi-automatic entry (sets the table to edit mode, an alarm is output):
  The vessel is emptied or filled in stages in this entry mode. The device automatically records the level value (X-value). The associated volume, mass or % value is entered manually (Y-value).
- Activate table
  The table entered is activated and checked with this option. The device shows the level after linearization.

Factory setting Linear

Unit after lin.

Write permission Operators/Service engineers/Expert

Description Select volume unit, mass, height or % (unit of the Y-value).

Options
- %
- cm, dm, m, mm
- hl
- in^3, ft^3, m^3,
- l
- in, ft
- kg, t
- lb
- gal
- Igal

Factory setting %

Line-numb

Write permission Operators/Service engineers/Expert

Description Enter the number of the current point in the table. Subsequent entries in "X-val" and "Y-val" relate to this point.

Input range 1...32

X-val

Write permission Operators/Service engineers/Expert

Description Enter the X-value (level before linearization) for the specific point in the table and confirm.

Note
- If "Lin. mode" = "Manual", the level value must be entered.
- If "Lin. mode" = "Semiautomatic", the level value is displayed and must be confirmed by entering the paired Y-value.

Y-value

Write permission Operators/Service engineers/Expert

Description Enter the Y-value (value after linearization) for the specific point in the table. The unit is determined by "Unit after lin.".

Note The linearization table must be monotonic (increasing or decreasing).

Edit table

Write permission Operators/Service engineers/Expert

Description Select the function for entering the table.

Options
- Next point: Enter the next point.
- Current point: stay on the current point to correct a mistake for example.
- Last input point: skip back to previous point to correct a mistake for example.
- Insert point: Insert an additional point (see example below).
- Delete point: Delete the current point (see example below).

Example

Add point, in this case between the 4th and 5th point for example
- Select point 5 via the "Line-numb" parameter.
- Select the "Insert point" option via the "Edit table" parameter.
- Point 5 is displayed for the "Line-numb" parameter. Enter new values for the "X-val" and "Y-val" parameters.

Delete point, in this case the 5th point for example
- Select point 5 via the "Line-numb" parameter.
- Select the "Delete point" option via the "Edit table" parameter.
- The 5th point is deleted. All of the following points are pushed up one number i.e. following deletion, the 6th point becomes Point 5.

Factory setting Current point

Tank description

Write permission Operators/Service engineers/Expert

Description Enter the tank description (max. 32 alphanumeric characters)

Tank content

Write permission No write permissions. Parameter is read only.

Description Displays the level value after linearization.

14.9 Expert → Measurement → Sensor limits

LRL sensor

Write permission No write permissions. Parameter is read only.

Description Displays the lower-range limit of the sensor.

URL sensor

Write permission No write permissions. Parameter is read only.

Description Displays the upper-range limit of the sensor.

14.10 Expert → Measurement → Sensor trim

Lo trim measured

Write permission Parameter is read only. Only Endress+Hauser Service has write permission.

Description Displays the reference pressure present to be accepted for the lower calibration point.

Hi trim measured

Write permission Parameter is read only. Only Endress+Hauser Service has write permission.

Description Displays the reference pressure present to be accepted for the upper calibration point.

Lo trim sensor

Write permission No write permissions. Parameter is read only.

Description Sensor module recalibration by entering a target pressure while simultaneously and automatically accepting a reference pressure present for the lower calibration point.

Hi trim sensor

Write permission No write permissions. Parameter is read only.

Description Sensor module recalibration by entering a target pressure while simultaneously and automatically accepting a reference pressure present for the upper calibration point.

14.11 Expert → Output → Current output

Output current

Write permission Operators/Service engineers/Expert

Description Displays the current current value.

Alarm behav. P

Write permission Operators/Service engineers/Expert

Description Configure the response of the current output if sensor module limits are overshot or undershot.

Options
- Warning
  The device continues to measure. An error message is displayed.
- Alarm
  The output signal assumes a value that can be specified by the "Output fail mode" function.

Factory setting Warning

Output fail mode

Write permission Operators/Service engineers/Expert

Description Select Output fail mode. In the event of an alarm, the current assumes the current value specified with this parameter.

Options
- Max: can be set from 21 to 23 mA, see also "High alarm curr."
- Hold: last measured value is held.
- Min: 3.6 mA

Factory setting Max (22 mA)

Max. alarm curr.

Write permission Operators/Service engineers/Expert

Description Enter the current value for maximum alarm current. See also "Output fail mode".

Input range 21 to 23 mA

Factory setting 22 mA

Set min. current

Write permission Operators/Service engineers/Expert

Description Enter lower current limit.
Some switching units accept no current smaller than 4.0 mA.

Options
- 3.8 mA
- 4.0 mA

Factory setting 3.8 mA

Get LRV

Write permission Operators/Service engineers/Expert

Description Set the lower-range value – reference pressure is present at the device. The pressure for the lower current value (4 mA) is present at the device. Use the "Confirm" option to assign the lower current value to the applied pressure value.

Prerequisite: Pressure measuring mode

Options
- Cancel
- Confirm

Factory setting Cancel

Set LRV

Write permission Operators/Service engineers/Expert

Description Set the pressure value, level or content for the lower current value (4 mA).

Factory setting
- 0.0 % in Level measuring mode
- 0.0 mbar/bar or in accordance with ordering information in Pressure measuring mode

Get URV (pressure measuring mode)

Write permission Operators/Service engineers/Expert

Description Set the upper-range value – reference pressure is present at the device. The pressure for the upper current value (20 mA) is present at the device. Use the "Confirm" option to assign the applied pressure value to the upper current value.

Prerequisite: Pressure measuring mode

Options
- Cancel
- Confirm

Factory setting Cancel

Set URV

Write permission Operators/Service engineers/Expert

Description Set the pressure value, level or content for the upper current value (20 mA).

Factory setting
- 100.0 % in Level measuring mode
- URL Sensor or according to ordering information in Pressure measuring mode

Startcurrent

Write permission Service engineers/Expert

Description Entry of the start current. This setting also applies in the HART Multidrop mode.

Options
- 12 mA
- Max alarm (22 mA, cannot be set)

Factory setting 12 mA

Curr. trim 4mA

Write permission Service engineers/Expert

Description Enter the pressure value for the lower point (4 mA) of the current partial regression lines. Using this parameter and "Curr. trim 20 mA", you can adapt the current output to the transmission conditions.

Options Carry out the current trim for the lower point as follows.
- Select the "Current" option in the "Simulation mode" parameter.
- In the "Sim current" parameter, configure the "4 mA value".
- Enter the current value measured using the switching unit in the "Curr. trim 4mA" parameter.

Input range Measured current ±0.2 mA

Factory setting 4 mA

Curr. trim 20mA

Write permission Service engineers/Expert

Description Enter the pressure value for the upper point (20 mA) of the current partial regression lines. Using this parameter and "Curr. Trim 4 mA", you can adapt the current output to the transmission conditions.

Options Carry out the current trim for the upper point as follows:
- Select the "Current" option in the "Simulation mode" parameter.
- In the "Sim current" parameter, configure the value "20 mA".
- Enter the current value measured using the switching unit in the "Curr. trim 20mA" parameter.

Input range Measured current ±1 mA

Factory setting 20 mA

Offset trim 4mA

Write permission Service engineers/Expert

Description Display/enter the difference between 4 mA and the value entered for the parameter "Curr. trim 4mA".

Factory setting 0

Offset trim 20mA

Write permission Service engineers/Expert

Description Display/enter the difference between 20 mA and the value entered for the parameter "Curr. trim 20mA".

Factory setting 0

14.12 Expert→ Communication → HART config.

Burst mode

Write permission Service engineers/Expert

Description Switching burst mode on and off.

Options
- On
- Off

Factory setting Off

Burst option

Write permission Service engineers/Expert

Description You can use this parameter to define which command is sent to the master.

Options
- 1 (HART command 1)
- 2 (HART command 2)
- 3 (HART command 3)
- 9 (HART command 9)
- 33 (HART command 33)

Factory setting 1 (HART command 1)

Current mode

Write permission Service engineers/Expert

Description Configure current mode for HART communication.

Options
- Signaling
  Measured value transmission by the current value
- Fixed
  Fixed current 4.0 mA (Multidrop mode)
  (Measured value transmission via HART digital communication only)

Factory setting Signaling

Bus address

Write permission	Service engineers/Expert
Description	Use this function to enter the address via which a data exchange is to take place via HART protocol. (HART 5.0 master: Range 0 to 15, where address = 0 calls up the "Signaling" setting; HART 6.0 master: Range 0 to 63)
Factory setting	0

Preamble number

Write permission	Service engineers/Expert
Description	Use this function to enter the number of preambles in the HART protocol. (Synchronization of the modem components along a transmission path, each modem component could "swallow" one byte, at least 2 bytes must be the preamble.)
Input range	2...20
Factory setting	5

14.13 Expert→ Communication → HART info

Device type code

Write permission No write permissions. Parameter is read only.

Description Display of the numerical ID of the device
Waterpilot FMX21: 36

Device revision

Write permission No write permissions. Parameter is read only.

Description Display of Device Revision (e.g. 1)

Manufacturer ID

Write permission No write permissions. Parameter is read only.

Description Displays the HART manufacturer ID in a decimal digit format.
Here: 17 (Endress+Hauser)

HART version

Write permission No write permissions. Parameter is read only.

Description Displays HART version .
Waterpilot FMX21: 6

Description

Write permission Service engineers/Expert

Description Enter the tag description (max. 16 alphanumeric characters)

HART message

Write permission Service engineers/Expert

Description Enter the message (max. 32 alphanumeric characters) Upon request from the master, this message is sent via the HART protocol.

HART date

Write permission Service engineers/Expert

Description Enter the date of the last configuration change.

Factory setting DD/MM/YY (date of the final test)

14.14 Expert→ Communication → HART output

Primary value is

Write permission No write permissions. Parameter is read only.

Description Indicates which measured value is transmitted via the HART protocol as the primary process value.

Factory setting Depending on the selected measuring mode, the following measured values can be displayed:
- "Pressure" measuring mode: "Meas. pressure"
- "Level" measuring mode, Lin. mode "Linear": "Level before Lin"
- "Level" measuring mode, Lin. mode "Activate table": "Tank content"

Primary value

Write permission No write permissions. Parameter is read only.

Description The primary value is displayed.

Secondary val.is

Write permission No write permissions. Parameter is read only.

Description Indicates which measured value is transmitted via the HART protocol as the secondary process value. The process value is configured via HART command 51.

Factory setting
- "Pressure" measuring mode: "Corrected press."
- "Level" measuring mode, "Linear" lin. mode: "Meas. pressure"
- "Level" measuring mode, Lin. mode "Activate table": "Level before linearization"

Display Depending on the selected measuring mode, the following measured values can be displayed:
- "Meas. pressure"
- "Sensor pressure"
- "Corrected press."
- "Pressure af.damp"
- "Sensor temp."
- "Level before Lin"
- "Tank content"
- "Process density" (corrected)

Secondary value

Write permission No write permissions. Parameter is read only.

Description The secondary value is displayed.

Third value is

Write permission No write permissions. Parameter is read only.

Description Indicates which measured value is transmitted via the HART protocol as the third process value. The process value is configured via HART command 51.

Factory setting
- "Pressure" measuring mode: "Sensor pressure"
- "Level" measuring mode, "Linear" lin. mode: "Corrected press."
- "Level" measuring mode, "Activate table" lin. mode: "Meas. pressure"

Display Depending on the selected measuring mode, the following measured values can be displayed:
- "Meas. pressure"
- "Sensor pressure"
- "Corrected press."
- "Pressure af.damp"
- "Sensor temp."
- "Level before Lin"
- "Tank content"
- "Process density" (corrected)

Third value is

Write permission No write permissions. Parameter is read only.

Description The third value is displayed.

4th value is

Write permission No write permissions. Parameter is read only.

Description Indicates which measured value is transmitted via the HART protocol as the fourth process value. The process value is configured via HART command 51.

Factory setting
- "Pressure" measuring mode: "Sensor temp"
- "Level" measuring mode, "Linear" lin. mode: "Sensor temp."
- "Level" measuring mode, "Activate table" lin. mode: "Sensor temp."

Display Depending on the selected measuring mode, the following measured values can be displayed:

- "Meas. pressure"
- "Sensor pressure"
- "Corrected press."
- "Pressure af.damp"
- "Sensor temp."
- "Level before Lin"
- "Tank content"
- "Process density" (corrected)

4th value

Write permission No write permissions. Parameter is read only.

Description The fourth value is displayed.

14.15 Expert→ Communication → HART input

HART input value

Write permission No write permissions. Parameter is read only.

Description Display of the HART input value

HART input stat.

Write permission No write permissions. Parameter is read only.

Description Display of the HART input status
Bad / Uncertain / Good

HART input unit

Write permission No write permissions. Parameter is read only.

Description Display of the unit for the HART input value.

Display
- Unknown
- mbar, bar
- mmH2O, ftH2O, inH2O
- Pa, hPa, kPa, MPa
- psi
- mmHg, inHg
- Torr
- g/cm^2, kg/cm^2
- lb/ft^2
- atm
- °C, °F, K, R

Factory setting Unknown

HART input form.

Write permission Operators/Service engineers/Expert

Description Number of decimal places of the displayed input value.

Options

- x.x
- x.xx
- x.xxx
- x.xxxx
- x.xxxxx

Factory setting

x.x

14.16 Expert → Application

Electr. Delta P

Write permission Operators/Service engineers/Expert

Description For switching the Electr. Delta P application off or on with an external or constant value.

Options
- Off
- External value
- Constant

Factory setting Off

Fixed ext. value

Write permission Operators/Service engineers/Expert

Description Use this function to enter the constant value. The value refers to "HART input unit"

Factory setting 0.0

Auto dens. corr.

Write permission Operators/Service engineers/Expert

Description For switching the auto dens. corr. application off or on with an external or internal temperature value.
Before performing a calibration (dry or wet), auto-density compensation must be switched on if this function is to be used. As soon as "Auto dens. corr." is switched on, the field for entering the "Process density" and "Adjust density" is disabled.
The calibration density remains the last value until it is overwritten by a calibration. The process density remains the last value until it is overwritten when the system recalculates the value.
Automatic density compensation is performed for the 0 to 70 °C (32 to 158 °F) temperature range. The density values for water are used for this density compensation.

Prerequisite Level mode

Options
- Off
- Sensor temperature
- External value (only if Off or Constant is selected for Electr. Delta P)

Factory setting
- Off
- On (if the option "IC" was selected in the "Service" order code when ordering)

14.17 Expert → Diagnosis

Diagnostic code

Write permission No write permissions. Parameter is read only.

Description Displays the diagnostic message with the highest priority currently present.

Last diag. code

Write permission No write permissions. Parameter is read only.

Description Displays the last diagnostic message that occurred and was rectified.

Note
- Digital communication: the last message is displayed.
- Use the "Reset logbook" parameter to clear the messages listed in the parameter "Last diag. code".

Reset logbook

Write permission Service engineers/Expert

Description Use this parameter to reset all messages of the parameter "Last diag. code" and the event logbook "Last diag. 1" to "Last diag. 10".

Options
- Cancel
- Confirm

Factory setting Cancel

Min. meas. press.

Write permission No write permissions. Parameter is read only.

Description Displays the lowest pressure value measured (peakhold indicator). You can reset this indicator by means of the "Reset peakhold" parameter.

Max. meas. press.

Write permission No write permissions. Parameter is read only.

Description Displays the highest pressure value measured (peakhold indicator). You can reset this indicator by means of the "Reset peakhold" parameter.

Reset peakhold

Write permission Service engineers/Expert

Description You can reset the "Min. meas. press." and "Max. meas. press." indicators with this parameter.

Options
- Cancel
- Confirm

Factory setting Cancel

Operating hours

Write permission No write permissions. Parameter is read only.

Description Displays the hours of operation. This parameter cannot be reset.

Config. counter

Write permission Operators/Service engineers/Expert

Description Displays the configuration counter.
This counter is increased by one every time a parameter or group is changed. The counter counts up to 65535 and then starts again at zero.

14.18 Expert → Diagnosis → Diagnostic list

Diagnostic 1 (075)
Diagnostic 2 (076)
Diagnostic 3 (077)
Diagnostic 4 (078)
Diagnostic 5 (079)
Diagnostic 6 (080)
Diagnostic 7 (081)
Diagnostic 8 (082)
Diagnostic 9 (083)
Diagnostic 10 (084)

Write permission No write permissions. Parameter is read only.

Description This parameter contains up to ten diagnosis messages that are currently pending, arranged in order of priority.

14.19 Expert → Diagnosis→ Event logbook

Last diag. 1 (085)
Last diag. 2 (086)
Last diag. 3 (087)
Last diag. 4 (088)
Last diag. 5 (089)
Last diag. 6 (090)
Last diag. 7 (091)
Last diag. 8 (092)
Last diag. 9 (093)
Last diag. 10 (094)

Write permission
No write permissions. Parameter is read only.

Description
This parameter contains the last 10 diagnosis messages to occur and be rectified. They can be reset using the "Reset logbook" parameter.
Errors which have occurred multiple times are displayed once only.
Errors may also appear multiple times if another error has occurred in the meantime. The messages are displayed in chronological order.

14.20 Expert → Diagnosis → Simulation

Simulation mode

Write permission Operators/Service engineers/Expert

Description Switch on simulation and select the simulation mode. When changing the measuring mode or the "Lin. mode" level type or when the device is restarted, any simulation that may be running is switched off.

Options
- None
- Pressure →see this table, "Sim. pressure" parameter
- Level, → see this table, "Sim. level" parameter
- Tank content, → see this table, "Sim. tank cont." parameter
- Current, → see this table, "Sim. current" parameter
- Alarm/warning, → see this table, "Sim. error no."

Factory setting None

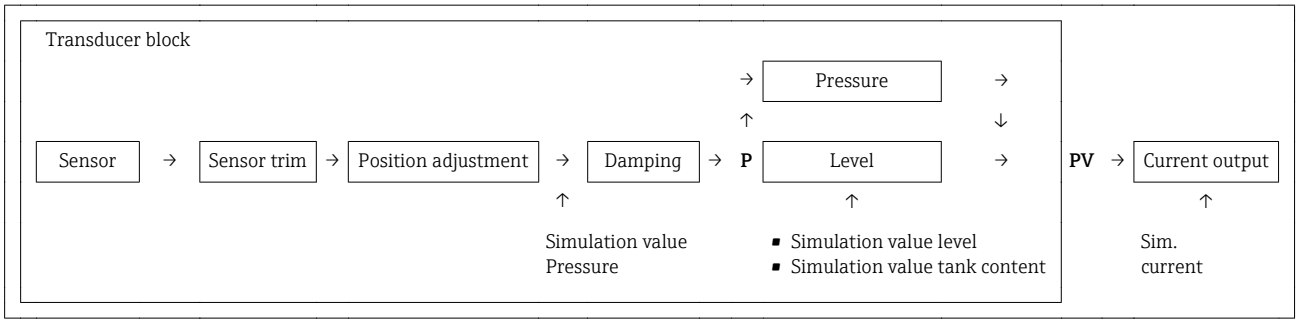

Sim. pressure

Write permission Operators/Service engineers/Expert

Description Enter the simulation value. See also "Simulation mode".

Prerequisite "Simulation mode" = Pressure

Value at switch-on Current pressure measured value

Sim. level

Write permission Operators/Service engineers/Expert

Description Enter the simulation value. See also "Simulation mode".

Prerequisite "Measuring mode" = Level and "Simulation mode" = Level

Value at switch-on Current level measured value

Sim. tank cont.

Write permission Operators/Service engineers/Expert

Description Enter the simulation value. See also "Simulation mode".

Prerequisite "Measuring Mode" = level, Lin mode "Activate table" and "Simulation Mode" = Tank content

Value at switch-on Current tank content

Sim. current

Write permission Operators/Service engineers/Expert

Description Enter the simulation value. See also "Simulation mode".

Prerequisite "Simulation Mode" = Current value

Value at switch-on Current current value

Sim. alarm/warning

Write permission Operators/Service engineers/Expert

Description Enter the simulation value. See also "Simulation mode".

Prerequisite "Simulation Mode" = Alarm/Warning

Factory setting: 484 (Simulation active)

15 Accessories

⚠ CAUTION

Observe the additional information in the individual sections!

- For additional information, see the sections "Mechanical construction" (in Technical Information TI00431P), "Environment", → 134, "Process" → 136 and "Installation" → 18.

Designation	Diagram	Description	Order number / ordering information
Suspension clamp	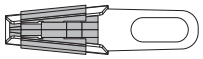 A0030950	For easy installation of the FMX21, Endress+Hauser offers a mounting clamp .	▪ 52006151 ▪ Product Configurator order code for "Accessory enclosed", option "PO"
Terminal box	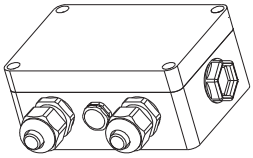 A0030967	Terminal box for terminal strip, temperature head transmitter and Pt100.	▪ 52006152 ▪ Product Configurator order code for "Accessories enclosed", option "PS"
4-terminal strip/terminals	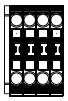 A0030951	4-terminal strip for wiring	52008938
TMT182 temperature head transmitter for FMX21 4 to 20 mA HART	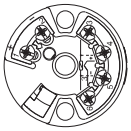 A0030952	PC-programmable (PCP) temperature head transmitter for the conversion of various input signals	▪ 51001023 ▪ Product Configurator order code for "Accessories enclosed", option "PT"
Cable mounting screws	A B 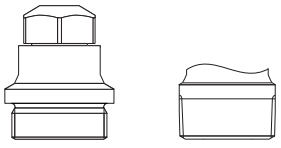 A0030953 *A G 1½" A* *B NPT 1½"*	Endress+Hauser offers a cable mounting screw for easy FMX21 mounting and to seal the measuring aperture.	▪ G 1½" A – 52008264 – Product Configurator order code for "Accessories enclosed", option "PQ" ▪ NPT 1½" – 52009311 – Product Configurator order code for "Accessories enclosed", option "PR"
Additional weight for FMX21 with outer diameter 22 mm (0.87 in) or 29 mm (1.14 in)	 A0030954	Endress+Hauser offers additional weights to prevent sideways movement that results in measuring errors, or to make it easier to lower the device in a guide tube.	▪ 52006153 ▪ Product Configurator order code for "Accessories enclosed", option "PU"
Cable shortening kit	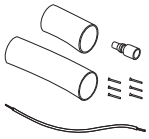 A0030948	The cable shortening kit is used to shorten a cable easily and professionally.	▪ 71222671 ▪ Product Configurator order code for "Accessories enclosed", option "PW"

Designation	Diagram	Description	Order number / ordering information
Testing adapter for FMX21 with outer diameter 22 mm (0.87 in) or 29 mm (1.14 in)	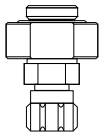 A0030956	Endress+Hauser offers a testing adapter to ease function-testing of the level probes.	▪ 52011868 ▪ Product Configurator order code for "Accessories enclosed", option "PV"
Testing adapter for FMX21 with outer diameter 42 mm (1.65 in)	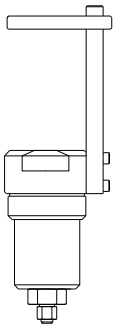 A0030957	Endress+Hauser offers a testing adapter to ease function-testing of the level probes. ▪ Observe the maximum pressure for compressed air hose and maximum overload for level probe ▪ Maximum pressure for the quick coupling piece provided: 10 bar (145 psi)	71110310
RIA15 in the field housing	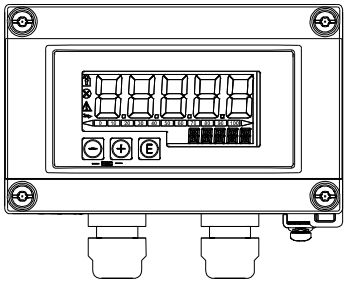 A0036164	Remote display RIA15 non-hazardous	Product structure, feature 620 "Accessory enclosed", option R4 "Remote display RIA15 non-hazardous area, field housing"
		Remote display RIA15 hazardous	Product structure, feature 620 "Accessory enclosed", option R5 "Remote display RIA15 Ex= explosion protection approval, field housing"
HART communication resistor	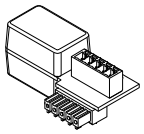 A0036165	HART communication resistor, hazardous / non-hazardous area, for use with RIA15	Product structure, feature 620 "Accessory enclosed", option R6 "HART communication resistor hazardous / non-hazardous area"

15.1 Service-specific accessories

Accessories	Description
DeviceCare SFE100	Configuration tool for HART, PROFIBUS and FOUNDATION Fieldbus field devices Technical Information TI01134S DeviceCare is available for download at www.software-products.endress.com. You need to register in the Endress+Hauser software portal to download the application.
FieldCare SFE500	FDT-based plant asset management tool FieldCare can configure all smart field units in your plant and helps you manage them. By using the status information, FieldCare is also a simple but effective way of checking the status and condition of the field devices. Technical Information TI00028S

16 Technical data

16.1 Input

16.1.1 Measured variable

FMX21 + Pt100 (optional)

- Hydrostatic pressure of a liquid
- Pt100: Temperature

TMT182 temperature head transmitter (optional) for FMX21 4 to 20 mA HART

Temperature

16.1.2 Measuring range

- Customer-specific measuring ranges or calibration that has been preset in the factory
- Temperature measurement of −10 to +70 °C (+14 to +158 °F) with Pt100 (optional)

Relative pressure

Sensor measuring range [bar (psi)]	Lowest calibratable span [1] [bar (psi)]	Vacuum resistance [bar_{abs} (psi_{abs})]	Option [2]
0.1 (1.5)	0.01 (0.15)	0.3 (4.5)	1C
0.2 (3.0)	0.02 (0.3)	0.3 (4.5)	1D
0.4 (6.0)	0.04 (1.0)	0	1F
0.6 (9.0)	0.06 (1.0)	0	1G
1.0 (15.0)	0.1 (1.5)	0	1H
2.0 (30.0)	0.2 (3.0)	0	1K
4.0 (60.0)	0.4 (6.0)	0	1M
10.0 (150) [3]	1.0 (15)	0	1P
20.0 (300) [3]	2.0 (30)	0	1Q

1) Largest turn down that can be configured at the factory: 10:1, higher turn down can be configured on request or in the device (for FMX21 4 to 20 mA HART).
2) Product Configurator order code for "Sensor range"
3) These measuring ranges are not available for the special version with plastic insulation, external diameter of 29 mm (1.14 in).

Absolute pressure

Sensor measuring range [bar (psi)]	Lowest calibratable span [1] [bar (psi)]	Vacuum resistance [bar_{abs} (psi_{abs})]	Option [2]
2.0 (30.0)	0.2 (3.0)	0	2K
4.0 (60.0)	0.4 (6.0)	0	2M

Sensor measuring range [bar (psi)]	Lowest calibratable span [1] [bar (psi)]	Vacuum resistance [bar_{abs} (psi_{abs})]	Option [2]
10.0 (150) [3]	1.0 (15)	0	2P
20.0 (300) [3]	2.0 (30)	0	2Q

1) Largest turn down that can be configured at the factory: 10:1, higher turn down can be configured on request or in the device (for FMX21 4 to 20 mA HART).
2) Product Configurator order code for "Sensor range"
3) These measuring ranges are not available for the special version with plastic insulation, external diameter of 29 mm (1.14 in).

16.1.3 Input signal

FMX21 + Pt100 (optional)

- Change in capacitance
- Pt100: Change in resistance

TMT182 temperature head transmitter (optional) for FMX21 4 to 20 mA HART

Pt100 resistance signal, 4 wire

16.2 Output

16.2.1 Output signal

FMX21 + Pt100 (optional)

- 4 to 20 mA HART with superimposed digital communication protocol HART 6.0, 2-wire for hydrostatic pressure measured value.
  Ordering information: Product Configurator order code for "Output", option "2"
  Options:
  – Max. alarm (factory setting 22mA): can be set from 21 to 23 mA
  – Hold measured value: last measured value is held
  – Min. alarm: 3.6 mA
- Pt100: temperature-dependent resistance value

TMT182 temperature head transmitter (optional) for FMX21 4 to 20 mA HART

4 to 20 mA HART with superimposed digital communication protocol HART 5.0 for temperature measured value, 2-wire

16.2.2 Signal range

3.8 mA to 20.5 mA

16.2.3 Maximum load for FMX21 4 to 20 mA HART

The maximum load resistance depends on the supply voltage (U) and must be determined individually for each current loop, see formula and diagrams for FMX21 and temperature head transmitter. The total resistance resulting from the resistances of the connected devices, the connecting cable and, where applicable, the resistance of the extension cable may not exceed the load resistance value.

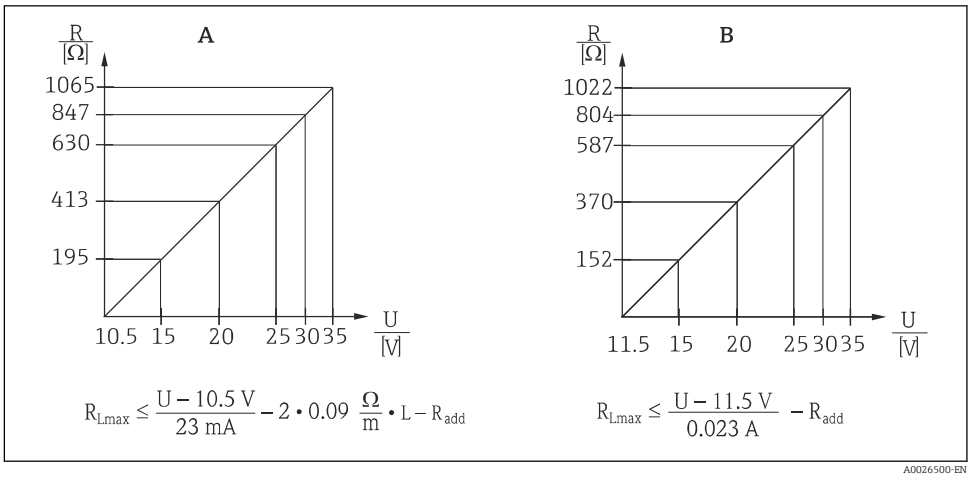

A FMX21 4 to 20 mA HART load chart for estimating the load resistance. Additional resistances, such as the resistance of the extension cable, have to be subtracted from the value calculated as shown in the equation.

B Load diagram for TMT182 temperature head transmitter for estimating the load resistance. Additional resistances must be subtracted from the value calculated as shown in the equation

R_{Lmax} Max. load resistance [Ω]

R_{add} Additional resistances such as resistance of evaluating device and/or display unit, cable resistance [Ω]

U Supply voltage [V]

L Basic length of extension cable [m] (cable resistance per wire 0.09 Ω/m)

- When using the measuring device in hazardous areas, installation must comply with the corresponding national standards and regulations and the Safety Instructions or Installation or Control Drawings (XA).
- When operating via a handheld terminal or via a PC with an operating program, a minimum communication resistance of 250 Ω must be taken into account.

16.2.4 Protocol-specific data for FMX21 4 to 20 mA HART

Manufacturer ID	17 (11 hex)
Device type code	25 (19 hex)
Device revision	01 (01 hex) - SW version 01.00.zz
HART specification	6
DD revision	01
Device description files (DTM, DD)	Information and files under: ▪ www.endress.com ▪ www.fieldcommgroup.org
HART load	Min. 250 Ω
HART device variables	The dynamic variables SV, TV and QV may be assigned to any device variable: **Standard process values for SV, TV (second and third device variable) are dependent on the measuring mode:** ▪ Pressure ▪ Level **Standard process value for QV (fourth device variable) is the sensor temperature:** Temperature **Measured values for PV (first device variable) are dependent on the measuring mode:** ▪ Pressure ▪ Level ▪ Tank content
Supported functions	▪ Burst mode ▪ Additional transmitter status ▪ Device locking ▪ Alternative measuring modes ▪ Catch variable ▪ Long tag

16.3 Performance characteristics

16.3.1 Reference operating conditions

FMX21 + Pt100 (optional)

- As per IEC 60770
- Ambient temperature T_U = constant, in the range of +21 to +33 °C (+70 to +91 °F)
- Humidity φ = constant, in the range of 20 to 80 % rH
- Ambient pressure p_U = constant, in the range of 860 to 1060 mbar (12.47 to 15.37 psi)
- Position of measuring cell constant, vertical in the range of ±1°
- Input of LOW SENSOR TRIM and HIGH SENSOR TRIM for lower range value and upper range value (only for HART)
- Supply voltage constant: 21 V DC to 27 V DC
- Load with HART: 250 Ω
- Pt100: DIN EN 60770, T_U = +25 °C (+77 °F)

TMT182 temperature head transmitter (optional) for FMX21 4 to 20 mA HART

Calibration temperature +25 °C (+77 °F) ±5 K

16.3.2 Reference accuracy

FMX21 + Pt100 (optional)

The reference accuracy comprises the non-linearity after limit point configuration, hysteresis and non-reproducibility in accordance IEC 60770.

Standard version [2]:
Setting ±0.2 %
– to TD 5:1: < 0.2 % of set span
– from TD 5:1 to TD 20:1 ±(0.02 x TD+0.1)

Platinum version [3]:
- Setting ±0.1 % (optional)
  – to TD 5:1: < 0.1 % of set span
  – from TD 5:1 to TD 20:1 ±(0.02 x TD)
- Class B as per DIN EN 60751
  Pt100: max. ±1 K

TMT182 temperature head transmitter (optional) for FMX21 4 to 20 mA HART

- ±0.2 K
- With Pt100: max. ±0.9 K

16.3.3 Resolution

Current output: 1 µA

Reading cycle

HART commands: on average 2 to 3 per second

2) Ordering information: Product Configurator order code for "Reference accuracy", option "G"
3) Ordering information: Product Configurator order code for "Reference accuracy", option "D"

16.3.4 Long-term stability

FMX21 + Pt100 (optional)

- ≤ 0.1 % of URL/year
- ≤ 0.25 % of URL/5 years

TMT182 temperature head transmitter (optional) for FMX21 4 to 20 mA HART

≤ 0.1 K per year

16.3.5 Influence of medium temperature

- Thermal change in the zero output and the output span:
  0 to +30 °C (+32 to +86 °F): < (0.15 + 0.15 x TD)% of set span
  −10 to +70 °C (+14 to +158 °F): < (0.4 + 0.4 x TD)% of set span
- Temperature coefficient (T_K) of the zero output and the output span
  −10 to +70 °C (+14 to +158 °F): 0.1 % / 10 K of URL

16.3.6 Warm-up period

FMX21 + Pt100 (optional)

- FMX21: < 6 s
- Pt100: 300 s

TMT182 temperature head transmitter (optional) for FMX21 4 to 20 mA HART

4 s

16.3.7 Response time

FMX21 + Pt100 (optional)

- FMX21: 400 ms (T90 time), 500 ms (T99 time)
- Pt100: 160 s (T90 time), 300 s (T99 time)

16.4 Environment

16.4.1 Ambient temperature range

FMX21 + Pt100 (optional)

- With external diameter of 22 mm (0.87 in) and 42 mm (1.65 in):
  −10 to +70 °C (+14 to +158 °F) (= medium temperature)
- With external diameter of29 mm (1.14 in):
  0 to +50 °C (+32 to +122 °F) (= medium temperature)

Cable

(when mounted in a fixed position)
- With PE: −30 to +70 °C (−22 to +158 °F)
- With FEP: −40 to +70 °C (−40 to +158 °F)
- With PUR: −40 to +70 °C (−40 to +158 °F)

Terminal box

−40 to +80 °C (−40 to +176 °F)

TMT182 temperature head transmitter (optional) for FMX21 4 to 20 mA HART

−40 to +85 °C (−40 to +185 °F)

Temperature head transmitter 2-wire, configured for a measuring range of −20 to +80 °C (−4 to +176 °F). This configuration offers a temperature range of 100 K which can be easily mapped. Please note that the Pt100 resistance temperature detector is suitable for a temperature range of −10 to +70 °C (14 to +158 °F)

The TMT182 temperature head transmitter is not designed for use in hazardous areas incl. CSA GP.

16.4.2 Storage temperature range

FMX21 + Pt100 (optional)

−40 to +80 °C (−40 to +176 °F)

Cable

(when mounted in a fixed position)
- With PE: −30 to +70 °C (−22 to +158 °F)
- With FEP: −30 to +80 °C (−22 to +176 °F)
- With PUR: −40 to +80 °C (−40 to +176 °F)

Terminal box

−40 to +80 °C (−40 to +176 °F)

TMT182 temperature head transmitter (optional) for FMX21 4 to 20 mA HART

−40 to +100 °C (−40 to +212 °F)

16.4.3 Degree of protection

FMX21 + Pt100 (optional)

IP68, permanently hermetically sealed at 20 bar (290 psi) (~200 m H_2O)

Terminal box (optional)

IP66, IP67

TMT182 temperature head transmitter (optional) for FMX21 4 to 20 mA HART

IP00, condensation permitted

16.4.4 Electromagnetic compatibility (EMC)

FMX21 + Pt100 (optional)

- EMC in accordance with all relevant requirements of EN 61326 series. For details, refer to the Declaration of Conformity.
- Maximum deviation: < 0.5 % of span.

TMT182 temperature head transmitter (optional) for FMX21 4 to 20 mA HART

EMC in accordance with all relevant requirements of EN 61326 series. For details, refer to the Declaration of Conformity.

16.4.5 Overvoltage protection

FMX21 + Pt100 (optional)

- Integrated overvoltage protection as per EN 61000-4-5 (500 V symmetrical/1000 V asymmetrical)
- Overvoltage protection ≥ 1.0 kV, external if necessary

TMT182 temperature head transmitter (optional) for FMX21 4 to 20 mA HART

Provide overvoltage protection, externally if necessary (see Technical Information).

16.5 Process

16.5.1 Medium temperature range

FMX21 + Pt100 (optional)

- With external diameter of 22 mm (0.87 in) and 42 mm (1.65 in):
  −10 to +70 °C (+14 to +158 °F)
- With external diameter of 29 mm (1.14 in):
  0 to +50 °C (+32 to +122 °F)

TMT181 temperature head transmitter (optional) for FMX21 4 to 20 mA HART

−40 to +85 °C (−40 to +185 °F)

(= ambient temperature), install temperature head transmitter outside the medium.

Temperature head transmitter 2-wire, configured for a measuring range of −20 to +80 °C (−4 to +176 °F). This configuration offers a temperature range of 100 K which can be easily mapped. Please note that the Pt100 resistance temperature detector is suitable for a temperature range of −10 to +70 °C (14 to +158 °F)

The TMT182 temperature head transmitter is not designed for use in hazardous areas incl. CSA GP.

16.5.2 Medium temperature limit

FMX21 + Pt100 (optional)

With external diameter of 22 mm (0.87 in) and 42 mm (1.65 in):
−20 to +70 °C (−4 to +158 °F)

In hazardous areas incl. CSA GP, the medium temperature limit is −10 to +70 °C (+14 to +158 °F).

With external diameter of29 mm (1.14 in): 0 to +50 °C (+32 to +122 °F)

The FMX21 may be operated in this temperature range. The specification values, such as accuracy, may be exceeded.

16.5.3 Pressure specifications

⚠ WARNING

The maximum pressure for the measuring device depends on the lowest-rated element with regard to pressure.

- For pressure specifications, see the "Measuring range" section and the "Mechanical construction" section.
- The measuring device must be operated only within the specified limits!
- The Pressure Equipment Directive (2014/68/EU) uses the abbreviation "PS". The abbreviation "PS" corresponds to the MWP (maximum working pressure) of the measuring device.
- MWP (maximum working pressure): The MWP (maximum working pressure) is specified on the nameplate. This value refers to a reference temperature of +20 °C (+68 °F) and may be applied to the device for an unlimited time. Observe temperature dependency of the MWP.
- OPL (Over Pressure Limit = sensor overload limit): The test pressure corresponds to the over pressure limit of the sensor and may only be applied for a limited time period to ensure measurement within specification and in order to avoid permanent damage. In the case of sensor range and process connections where the over pressure limit (OPL) of the process connection is smaller than the nominal value of the sensor, the device is set at the factory, at the very maximum, to the OPL value of the process connection. If you want to use the entire sensor range, select a process connection with a higher OPL value.
- avoid steam hammering! Steam hammering can cause zero point drifts. Recommendation: Residue (such as condensation or drops of water) can remain on the process isolating diaphragm after CIP cleaning and lead to local steam hammering if steam cleaning is performed again. In practice, drying the process isolating diaphragm (e.g. by blowing) has proved to prevent steam hammering.

16.6 Additional technical data

See Technical Information TI00431P.

Index

0 ... 9
4th value 114
4th value is 113

A
Accessories
Service-specific 125
Adjust density 97
Alarm behav. P 104
Application 10
Auto dens. corr. 117

B
Burst Mode 108
Burst Option 108
Bus Address 108

C
Calib. Offset 45, 90
Calibration mode 95
CE mark (declaration of conformity) 11
Cleaning 76
Code definition 86
Config. counter 119
Configuration of a level measurement 48
Configuration of a pressure measurement 46
Configure measuring mode 43
Configure pressure engineering unit 44
Configuring level measurement 48
Configuring pressure measurement 46
Corrected press. 93
Curr. trim 4mA 106
Curr. trim 20mA 107
Current Mode 108
Cust. tag number 87

D
Damping 45, 90
Declaration of Conformity 11
Density correction 117
Density unit 97
Description 110
Designated use 10
Device replacement 77
Device revision 110
Device tag 87
Device type code 110
DeviceCare 36
Diagnostic 1 (075) 120
Diagnostic 2 (076) 120
Diagnostic 3 (077) 120
Diagnostic 4 (078) 120
Diagnostic 5 (079) 120
Diagnostic 6 (080) 120
Diagnostic 7 (081) 120
Diagnostic 8 (082) 120
Diagnostic 9 (083) 120
Diagnostic 10 (084) 120
Diagnostic code 118
Diagnostic event 71
Diagnostic event in the RIA15 71
Diagnostic events 70
Diagnostic message 70
Diagnostics
Symbols 70

E
Edit table 100
Electr. Delta P 117
Electr.serial no. 88
Empty calib. 95
Empty height 96
Empty pressure 95
ENP version 88
Enter reset code 89
Event text 71
Ext. order code 87
Exterior cleaning 76

F
Firmware Version 87
Fixed ext. value 117
Full calib. 96
Full height 97
Full pressure 96

G
Get LRV 105
Get URV (pressure measuring mode) 105

H
HART Date 111
HART input form. 115
HART input stat. 115
HART input unit 115
HART input val. 115
HART Message 110
HART version 110
HART® protocol
Operating tools 41
Process variables 41
Version data for the device 41
Height unit 94
Hi trim measured 103
Hi trim sensor 103

L
Last diag. 1 (085) 121
Last diag. 2 (086) 121
Last diag. 3 (087) 121
Last diag. 4 (088) 121
Last diag. 5 (089) 121
Last diag. 6 (090) 121
Last diag. 7 (091) 121

Last diag. 8 (092) 121
Last diag. 9 (093) 121
Last diag. 10 (094) 121
Last diag. code 118
Level before lin. 98
Level selection 94
Lin. mode 99
Line-numb. 99
Lo trim measured 103
Lo trim sensor 103
Local display
see Diagnostic message
see In alarm condition
LRL sensor 102

M

Maintenance 76
Manufacturer ID 110
Max. alarm curr. 104
Max. meas. press. 118
Media 10
Menu
Overview 78, 81
Parameter description 86
Min. meas. press. 118

N

Nameplate 15

O

Offset trim 4mA 107
Offset trim 20mA 107
Operating hours 119
Operating menu
Overview 78, 81
Parameter description 86
Operating mode 89
Operational safety 10
Operator code 86
Order Identifier 88
Output current 104
Output fail mode 104
Output unit 94

P

Pos. zero adjust 90
Preamble Number 109
Press. eng. unit 91
Pressure af.damp 93
Pressure measured 92
Primary value 112
Primary value is 112
Process density 98
Product safety 11

R

Repair concept 77
Replacing a device 77
Reset Logbook 118
Reset Peakhold 119

S

Safety Instructions
Basic 10
Safety Instructions (XA) 7
Secondary val. is 112
Secondary value 112
Sensor pressure 92
Sensor serial no. 88
Sensor temp. 91
Serial number 87
Set LRV 92, 105
Set min. current 105
Set URV 92, 106
Sim. alarm/warning 123
Sim. current 123
Sim. level 122
Sim. pressure 122
Sim. tank cont. 123
Simulation mode 122
Spare parts 77
Nameplate 77
Staff
Requirements 10
Startcurrent 106
Status signals 70

T

Tank content 101
Tank description 101
Temp. Eng. Unit 91
Third value 113
Third value is 113
Troubleshooting 70

U

Unit after lin. 99
URL sensor 102
Use of the measuring devices
Borderline cases 10
Incorrect use 10
Using measuring device
see Designated use

W

W@M Device Viewer 77
Workplace safety 10

X

X-value 100

Y

Y-value 100



www.addresses.endress.com

Endress+Hauser

People for Process Automation

Section 3.6.9

Sludge Tank High Level Float

Installation, Operation, and
Maintenance Manual

899752_4.0



ENM 10

Table of Contents

1 Introduction and Safety....2
1.1 Introduction....2
1.2 Safety terminology and symbols....2
1.3 User safety....3
1.3.1 Power lock-out....3
1.3.2 Qualification of personnel....3
1.4 End of life product disposal....4
1.5 Spare parts....4
1.6 Warranty....4
1.7 Support....4

2 Product Description....5
2.1 Introduction....5
2.2 Process description....5
2.3 Technical data....5
2.4 Electrical data....6
2.5 Approvals and standards....6

3 Mechanical Installation....7
3.1 Precautions....7
3.2 General....7

4 Electrical Installation....8
4.1 Precautions....8
4.2 Wiring diagrams....9
4.3 Connection for audible or visible alarm....10

5 Maintenance....11
5.1 General....11

1 Introduction and Safety

1.1 Introduction

Purpose of the manual

The purpose of this manual is to provide necessary information for installation, operation, and maintenance of the unit.

Read and keep the manual

Save this manual for future reference, and keep it readily available at the location of the unit.



CAUTION:

Read this manual carefully before installing and using the product. Improper use of the product can cause personal injury and damage to property, and may void the warranty.

The equipment, and its functioning, may be impaired if used in a manner not specified by the manufacturer.

Intended use



WARNING:

Operating, installing, or maintaining the unit in any way that is not covered in this manual could cause death, serious personal injury, or damage to the equipment and the surroundings. This includes any modification to the equipment or use of parts not provided by Xylem. If there is a question regarding the intended use of the equipment, please contact a Xylem representative before proceeding.

1.2 Safety terminology and symbols

About safety messages

It is extremely important that you read, understand, and follow the safety messages and regulations carefully before handling the product. They are published to help prevent these hazards:

- Personal accidents and health problems
- Damage to the product and its surroundings
- Product malfunction

Hazard levels

Hazard level		Indication
	DANGER:	A hazardous situation which, if not avoided, will result in death or serious injury
	WARNING:	A hazardous situation which, if not avoided, could result in death or serious injury
	CAUTION:	A hazardous situation which, if not avoided, could result in minor or moderate injury

Hazard level	Indication
NOTICE:	Notices are used when there is a risk of equipment damage or decreased performance, but not personal injury.

Special symbols

Some hazard categories have specific symbols, as shown in the following table.

Electrical hazard	Magnetic fields hazard
 Electrical Hazard:	 CAUTION:

1.3 User safety

Introduction

All government regulations, local health and safety directives must be observed.

Prevent danger due to electricity

All danger due to electricity must be avoided. Electrical connections must always be carried out in compliance with the following:

- The standard connections shown in the product documentation that is delivered together with the product
- All international, national, state, and local regulations. (For details, consult the regulations of your local electricity supplier.)

For more information about requirements, see sections dealing specifically with electrical connections.

1.3.1 Power lock-out



DANGER: Electrical Hazard

Before starting work on the unit, make sure that the unit and the control panel are isolated from the power supply and cannot be energized. This applies to the control circuit as well.

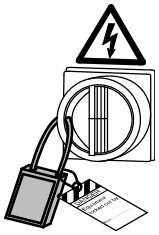

1.3.2 Qualification of personnel



WARNING: Electrical Hazard

Risk of electrical shock or burn. A certified electrician must supervise all electrical work. Comply with all local codes and regulations.

All work on the product must be carried out by certified electricians or Xylem authorized mechanics.

Xylem disclaims all responsibility for work done by untrained, unauthorized personnel.

1.4 End of life product disposal

Handle and dispose of all waste in compliance with local laws and regulations.

EU only: Correct disposal of this product – WEEE Directive on waste electrical and electronic equipment

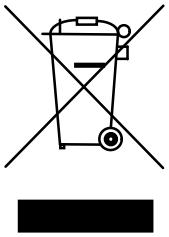

This marking on the product, accessories or literature indicates that the product should not be disposed of with other waste at the end of its working life.

To prevent possible harm to the environment or human health from uncontrolled waste disposal, please separate these items from other types of waste and recycle them responsibly to promote the sustainable reuse of material resources.

Waste from electrical and electronic equipment can be returned to the producer or distributor.

EU only: Correct disposal of batteries in this product

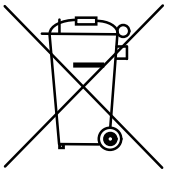

This marking on the battery, manual or packaging indicates that the batteries in this product should not be disposed of with other waste at the end of its working life. Where marked, the chemical symbols Hg, Cd or Pb indicate that the battery contains mercury, cadmium or lead above the reference levels in EC Directive 2006/66. If batteries are not properly disposed of, these substances can cause harm to human health or the environment.

To protect natural resources and to promote material re-use, please separate batteries from other types of waste and recycle them through your local, free battery return system.

1.5 Spare parts



CAUTION:

Only use the manufacturer's original spare parts to replace any worn or faulty components. The use of unsuitable spare parts may cause malfunctions, damage, and injuries as well as void the warranty.

1.6 Warranty

For information about warranty, see the sales contract.

1.7 Support

Xylem only supports products that have been tested and approved. Xylem does not support unapproved equipment.

2 Product Description

2.1 Introduction

Product description

The product is the simplest possible method for level control. A mechanical switch in a plastic casing, freely suspended at the desired height from its own cable. When the liquid level reaches the regulator, the casing will tilt and the mechanical switch will close or break the circuit, thereby starting or stopping a pump or actuating an alarm device. No wear, no maintenance. In sewage pumping stations, for ground water and drainage pumping – in fact, for most level control applications – the product is the ideal solution.

Liquid density

The product is available in different versions for different liquid densities.

Temperature limit

The regulator can withstand up to 60°C (140°F).

Manual coverage

This manual is applicable for the version shown in the following table:

Version	Casing
Standard	Red

2.2 Process description

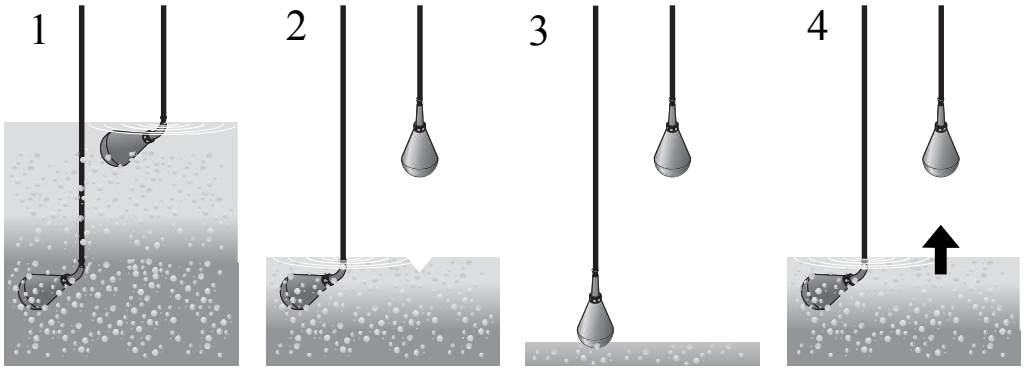

WS004996A

1. When the pumped media reaches a predetermined level, the upper level regulator tips over to horizontal position and the pump starts to drain the basin.
2. The basin is drained of fluid.
3. The pump stops when the lower level regulator returns to the vertical position.
4. The basin fills up again. The process restarts.

2.3 Technical data

Materials

Denomination	Standard version
Regulator casing	Polypropylene
Bend relief	EPDM rubber

Denomination	Standard version
Cable sheath	PVC

The plastic components are welded and screwed together.

Lengths

Lengths		Part numbers
Meters	Feet	
13.2	42	594 79 43
20.2	65.6	594 79 44
30.7	100	594 79 46

For liquids with specific density between 0.95 and 1.10 g/cm^3, the following cables are available:

Lengths	
meters	feet
6	20
13	42
20	65
30	100
50	167

Diameter

The cable diameter for all product variants is 6.7 mm (0.26 in), +/- 0.2 mm (0.00787 in).

2.4 Electrical data

Country	Electrical data
Denmark	10 A, 250 V, AC
Switzerland	6 A, 250 V, AC
Sweden	10 A, 230 V, AC Resistive load 3 A, 250 V, AC Inductive load 5 A, 30 V, DC Resistive load

Micro switch

The level regulator contains a micro switch, max rated 250 VAC/10 A.

Low-voltage supply

In many cases, local codes require that the regulator is connected to a low-voltage supply, even though it is approved for a higher voltage.

It is recommended that the regulator is connected to a low-voltage supply, 48 V or 24 V, and a protective transformer.

2.5 Approvals and standards

Standard approvals

- LVD approval according to EN61058.
- CE

3 Mechanical Installation

3.1 Precautions

Before starting work, make sure that the safety instructions in the chapter *Introduction and Safety* on page 2 have been read and understood.

3.2 General

To conform to local regulations, the regulators are normally connected through a transformer to a low-tension control circuit.

Make sure that two regulators are used, one for starting and one for stopping.

If an alarm is required at a given level, then connect a third regulator.

Identical regulators can be used for all functions.

Make sure that the cables do not become tangled during the installation.

The regulator cables must hang freely from each other.

4 Electrical Installation

4.1 Precautions

Before starting work, make sure that the safety instructions in the chapter *Introduction and Safety* on page 2 have been read and understood.



DANGER: Electrical Hazard

Before starting work on the unit, make sure that the unit and the control panel are isolated from the power supply and cannot be energized. This applies to the control circuit as well.

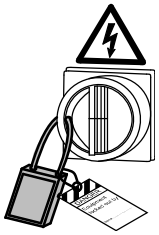



DANGER: Electrical Hazard

All electrical equipment must be grounded (earthed). Test the ground (earth) lead to verify that it is connected correctly and that the path to ground is continuous.



WARNING: Electrical Hazard

Risk of electrical shock or burn. A certified electrician must supervise all electrical work. Comply with all local codes and regulations.



WARNING: Electrical Hazard

There is a risk of electrical shock or explosion if the electrical connections are not correctly carried out, or if there is fault or damage on the product. Visually inspect equipment for damaged cables, cracked casings or other signs of damage. Make sure that electrical connections have been correctly made.



CAUTION: Electrical Hazard

Prevent cables from becoming sharply bent or damaged.

4.2 Wiring diagrams

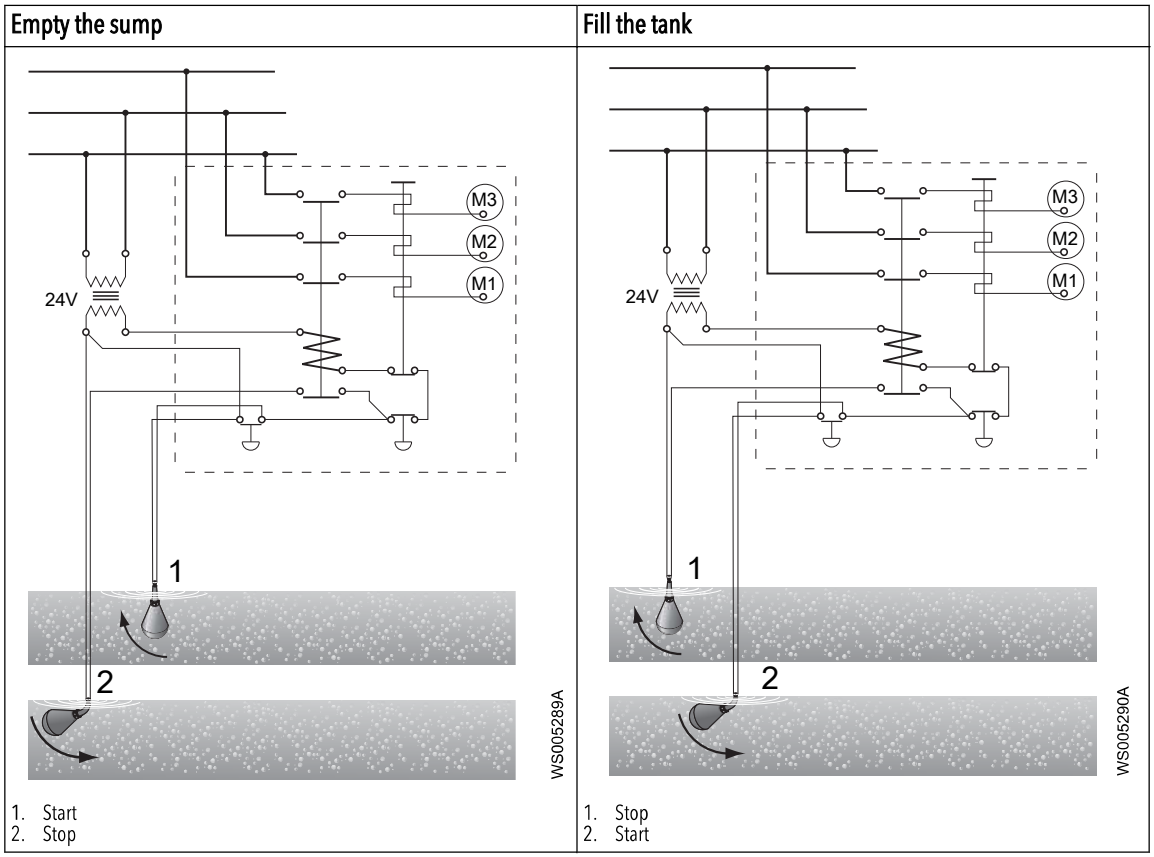

Connection table

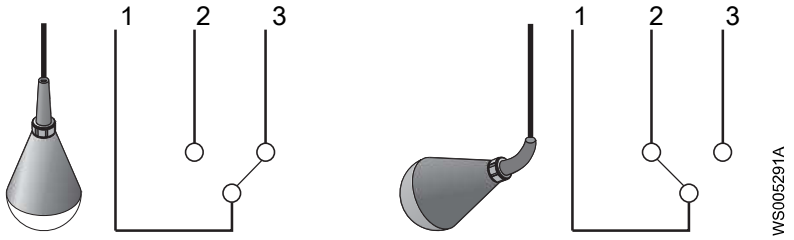

Cable	Connections to empty a sump	Connections to fill a tank
1	X	X
2	X	Insulate
3	Insulate	X

Color code

Cable	1	2	3
Color	Grey	Black	Brown

4.3 Connection for audible or visible alarm

Wiring diagrams

Alarm low level	Alarm high level
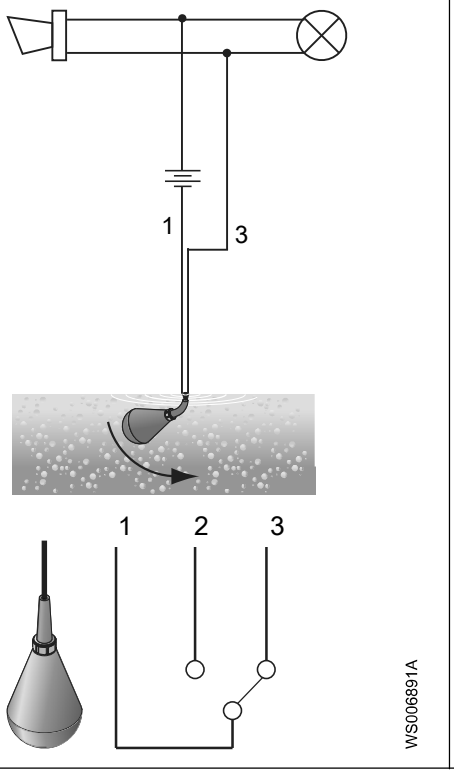	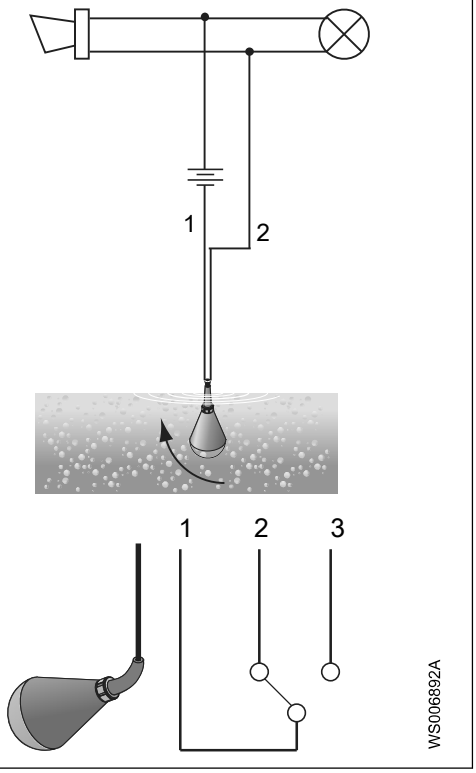

Description of position

Cable	1	2	3
Alarm high level	X	X	Insulate
Alarm low level	X	Insulate	X

Color code

Cable	1	2	3
Color	Grey	Black	Brown

5 Maintenance

5.1 General

To ensure its continual operation:

- Clean the product, especially when fat/grease covers the plastic surface
- Make an occular inspection of the regulator. Make sure neither cable, protective sleeve or plastic casing show any signs of damage.
- A damaged regulator cannot be repaired in any way, due to the hermetic encapsulation. If the product is found to be damaged, replace it with a new one.

Section 3.6.10

Dewatering Filtrate AOD Pumps

OPERATOR'S MANUAL PD05P-XXX-XXX-B

INCLUDING: OPERATION, INSTALLATION & MAINTENANCE

RELEASED: 8-27-08
REVISED: 10-16-09
(REV. 04)

1/2" DIAPHRAGM PUMP
1:1 RATIO (NON-METALLIC)

READ THIS MANUAL CAREFULLY BEFORE INSTALLING, OPERATING OR SERVICING THIS EQUIPMENT.

It is the responsibility of the employer to place this information in the hands of the operator. Keep for future reference.

SERVICE KITS

Refer to Model Description Chart to match the pump material options.
637427-XX for fluid section repair (see page 4).
637428 for air section repair (see page 6).

PUMP DATA

Models		see Model Description Chart for "-XXX"
Pump Type		Non-Metallic Air Operated Double Diaphragm
Material		see Model Description Chart
Weight	PD05P-XDS-XXX-B	6.28 lbs (2.85 kgs)
	PD05P-XES-XXX-B	6.67 lbs (3.03 kgs)
	PD05P-XKS-XXX-B	6.78 lbs (3.08 kgs)
	PD05P-XLS-XXX-B	7.24 lbs (3.28 kgs)
	PD05P-XPS-XXX-B	5.21 lbs (2.36 kgs)
	PD05P-XRS-XXX-B	5.44 lbs (2.47 kgs)
Maximum Air Inlet Pressure		100 p.s.i.g. (6.9 bar)
Maximum Material Inlet Pressure		10 p.s.i.g. (0.69 bar)
Maximum Outlet Pressure		100 p.s.i.g. (6.9 bar)
Air Consumption @ 40 p.s.i.		1 c.f.m. / gallon (approx.)
Maximum Flow Rate (flooded inlet)		14.4 g.p.m. (54.5 l.p.m.)
Displacement / Cycle @ 100 p.s.i.g.		0.039 gal. (0.15 lit.)
Maximum Particle Size		3/32" dia. (2.4 mm)
Maximum Temperature Limits (diaphragm / ball / seat material)		
Acetal		10° to 180° F (-12° to 82° C)
Hytrel®		-20° to 150° F (-29° to 66° C)
Kynar® PVDF		10° to 200° F (-12° to 93° C)
Nitrile		10° to 180° F (-12° to 82° C)
Polypropylene		35° to 175° F (2° to 79° C)
Polyurethane		10° to 150° F (-12° to 66° C)
Santoprene®		-40° to 225° F (-40° to 107° C)
Teflon® PTFE		40° to 225° F (4° to 107° C)
Viton®		-40° to 350° F (-40° to 177° C)
Groundable Models		PD05P-XDS-XXX-B PD05P-XES-XXX-B
Dimensional Data		see page 8
Noise Level @ 70 p.s.i., 60 c.p.m.		75.0 db(A)①

① The pump sound pressure levels published here have been updated to an Equivalent Continuous Sound Level (L_{Aeq}) to meet the intent of ANSI S1.13-1971, CAGI-PNEUROP S5.1 using four microphone locations.

NOTICE: All possible options are shown in the chart, however, certain combinations may not be recommended, consult a representative or the factory if you have questions concerning availability.

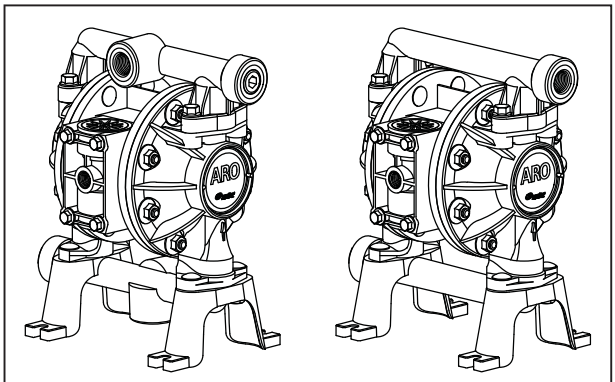

Figure 1

MODEL DESCRIPTION CHART

P D 05 P - X X S - X X X - B

Center Section Material
P - Polypropylene

Fluid Connection
A - 1/2 - 14 N.P.T.F. - 1
B - Rp 1/2 (1/2 - 14 BSP parallel)

Fluid Cap & Manifold Material
D - Groundable Acetal (single port)
E - Groundable Acetal (multiple port)
K - Kynar PVDF (single port)
L - Kynar PVDF (multiple port)
P - Polypropylene (single port)
R - Polypropylene (multiple port)

Hardware Material
S - Stainless steel

Seat Material
D - Acetal
K - Kynar PVDF
P - Polypropylene
S - Stainless steel

Ball Material
A - Santoprene
C - Hytrel
G - Nitrile
S - Stainless steel
T - Teflon PTFE
U - Polyurethane
V - Viton

Diaphragm Material
A - Santoprene
C - Hytrel
G - Nitrile
T - Teflon PTFE / Santoprene
U - Polyurethane
V - Viton

Fluid Section Service Kit Selection

Example: Model #PD05P-ARS-SAA-B
Fluid Section Service Kit # 637427-AA

PD05P - XXX - X X X - B
637427 - X X
Ball — Diaphragm

INGERSOLL RAND COMPANY LTD
P.O. BOX 151 • ONE ARO CENTER • BRYAN, OHIO 43506-0151
(800) 276-4658 • FAX (800) 266-7016
fluids.ingersollrand.com
© 2009
CCN 15250376

ARO

Ingersoll Rand
Industrial Technologies

OPERATING AND SAFETY PRECAUTIONS

READ, UNDERSTAND AND FOLLOW THIS INFORMATION TO AVOID INJURY AND PROPERTY DAMAGE.



EXCESSIVE AIR PRESSURE
STATIC SPARK



HAZARDOUS MATERIALS
HAZARDOUS PRESSURE

⚠WARNING EXCESSIVE AIR PRESSURE. Can cause personal injury, pump damage or property damage.

- Do not exceed the maximum inlet air pressure as stated on the pump model plate.
- Be sure material hoses and other components are able to withstand fluid pressures developed by this pump. Check all hoses for damage or wear. Be certain dispensing device is clean and in proper working condition.

⚠WARNING STATIC SPARK. Can cause explosion resulting in severe injury or death. Ground pump and pumping system.

- PD05P-XDS-XXX-B and PD05P-XES-XXX-B Groundable Acetal pumps: Use the pump ground lug provided. Connect to a 12 ga. (minimum) wire (kit is included) to a good earth ground source.
- Sparks can ignite flammable material and vapors.
- The pumping system and object being sprayed must be grounded when it is pumping, flushing, recirculating or spraying flammable materials such as paints, solvents, lacquers, etc. or used in a location where surrounding atmosphere is conducive to spontaneous combustion. Ground the dispensing valve or device, containers, hoses and any object to which material is being pumped.
- Secure pump, connections and all contact points to avoid vibration and generation of contact or static spark.
- Consult local building codes and electrical codes for specific grounding requirements.
- After grounding, periodically verify continuity of electrical path to ground. Test with an ohmmeter from each component (e.g., hoses, pump, clamps, container, spray gun, etc.) to ground to insure continuity. Ohmmeter should show 0.1 ohms or less.
- Submerse the outlet hose end, dispensing valve or device in the material being dispensed if possible. (Avoid free streaming of material being dispensed.)
- Use hoses incorporating a static wire.
- Use proper ventilation.
- Keep inflammables away from heat, open flames and sparks.
- Keep containers closed when not in use.

⚠WARNING Pump exhaust may contain contaminants. Can cause severe injury. Pipe exhaust away from work area and personnel.

- In the event of a diaphragm rupture, material can be forced out of the air exhaust muffler.
- Pipe the exhaust to a safe remote location when pumping hazardous or inflammable materials.
- Use a grounded 3/8" minimum i.d. hose between the pump and the muffler.

⚠WARNING HAZARDOUS PRESSURE. Can result in serious injury or property damage. Do not service or clean pump, hoses or dispensing valve while the system is pressurized.

- Disconnect air supply line and relieve pressure from the system by opening dispensing valve or device and / or carefully and slowly loosening and removing outlet hose or piping from pump.

⚠WARNING HAZARDOUS MATERIALS. Can cause serious injury or property damage. Do not attempt to return a pump to the factory or service center that contains hazardous material. Safe handling practices must comply with local and national laws and safety code requirements.

- Obtain Material Safety Data Sheets on all materials from the supplier for proper handling instructions.

⚠WARNING EXPLOSION HAZARD. Models containing aluminum parts cannot be used with 1,1,1-trichloroethane, methylene chloride or other halogenated hydrocarbon solvents which may react and explode.

- Check pump motor section, fluid caps, manifolds and all wetted parts to assure compatibility before using with solvents of this type.

⚠WARNING MISAPPLICATION HAZARD. Do not use models containing aluminum wetted parts with food products for human consumption. Plated parts can contain trace amounts of lead.

⚠ CAUTION Verify the chemical compatibility of the pump wetted parts and the substance being pumped, flushed or recirculated. Chemical compatibility may change with temperature and concentration of the chemical(s) within the substances being pumped, flushed or circulated. For specific fluid compatibility, consult the chemical manufacturer.

⚠ CAUTION Maximum temperatures are based on mechanical stress only. Certain chemicals will significantly reduce maximum safe operating temperature. Consult the chemical manufacturer for chemical compatibility and temperature limits. Refer to PUMP DATA on page 1 of this manual.

⚠ CAUTION Be certain all operators of this equipment have been trained for safe working practices, understand it's limitations, and wear safety goggles / equipment when required.

⚠ CAUTION Do not use the pump for the structural support of the piping system. Be certain the system components are properly supported to prevent stress on the pump parts.

- Suction and discharge connections should be flexible connections (such as hose), not rigid piped, and should be compatible with the substance being pumped.

⚠ CAUTION Prevent unnecessary damage to the pump. Do not allow pump to operate when out of material for long periods of time.

- Disconnect air line from pump when system sits idle for long periods of time.

⚠ CAUTION Use only genuine ARO® replacement parts to assure compatible pressure rating and longest service life.

NOTICE Install the pump in the vertical position. The pump may not prime properly if the balls do not check by gravity upon start-up.

NOTICE Re-torque all fasteners before operation. Creep of housing and gasket materials may cause fasteners to loosen. Re-torque all fasteners to insure against fluid or air leakage.

NOTICE Replacement warning labels are available upon request: "Static Spark" pn 93616-1, Diaphragm Rupture" pn 93122.

⚠WARNING	= Hazards or unsafe practices which could result in severe personal injury, death or substantial property damage.
⚠ CAUTION	= Hazards or unsafe practices which could result in minor personal injury, product or property damage.
NOTICE	= Important installation, operation or maintenance information.

GENERAL DESCRIPTION

The ARO diaphragm pump offers high volume delivery even at low air pressure and a broad range of material compatibility options are available. Refer to the model and option chart. ARO pumps feature stall resistant design, modular air motor / fluid sections.
Air operated double diaphragm pumps utilize a pressure differential in the air chambers to alternately create suction and a positive fluid pressure in the fluid chambers, ball checks insure a positive flow of fluid.
Pump cycling will begin as air pressure is applied and will continue to pump and keep up with the demand. It will build and maintain line pressure and will stop cycling once maximum line pressure is reached (dispensing device closed) and will resume pumping as needed.

AIR AND LUBE REQUIREMENTS

⚠WARNING EXCESSIVE AIR PRESSURE. Can cause pump damage, personal injury or property damage.

- A filter capable of filtering out particles larger than 50 microns should be used on the air supply. There is no lubrication required other than the "O" ring lubricant which is applied during assembly or repair.
- If lubricated air is present, make sure that it is compatible with the "O" rings and seals in the air motor section of the pump.

OPERATING INSTRUCTIONS

- Always flush the pump with a solvent compatible with the material being pumped if the material being pumped is subject to "setting up" when not in use for a period of time.
- Disconnect the air supply from the pump if it is to be inactive for a few hours.
- The outlet material volume is governed not only by the air supply, but also by the material supply available at the inlet. The material supply tubing should not be too small or restrictive. Be sure not to use hose which might collapse.
- When the diaphragm pump is used in a forced-feed (flooded inlet) situation, it is recommended that a "check valve" be installed at the air inlet.
- Secure the diaphragm pump legs to a suitable surface to insure against damage by vibration.

MAINTENANCE

- Certain ARO "Smart Parts" are indicated which should be available for fast repair and reduction of down time.
- Provide a clean work surface to protect sensitive internal moving parts from contamination from dirt and foreign matter during service disassembly and reassembly.
- Keep good records of service activity and include the pump in preventive maintenance program.
- Service kits are available to service two separate diaphragm pump functions: 1. AIR SECTION, 2. FLUID SECTION. The Fluid Section is divided further to match typical part Material Options.
- Before disassembling, empty captured material in the outlet manifold by turning the pump upside down to drain material from the pump.

TYPICAL CROSS SECTION

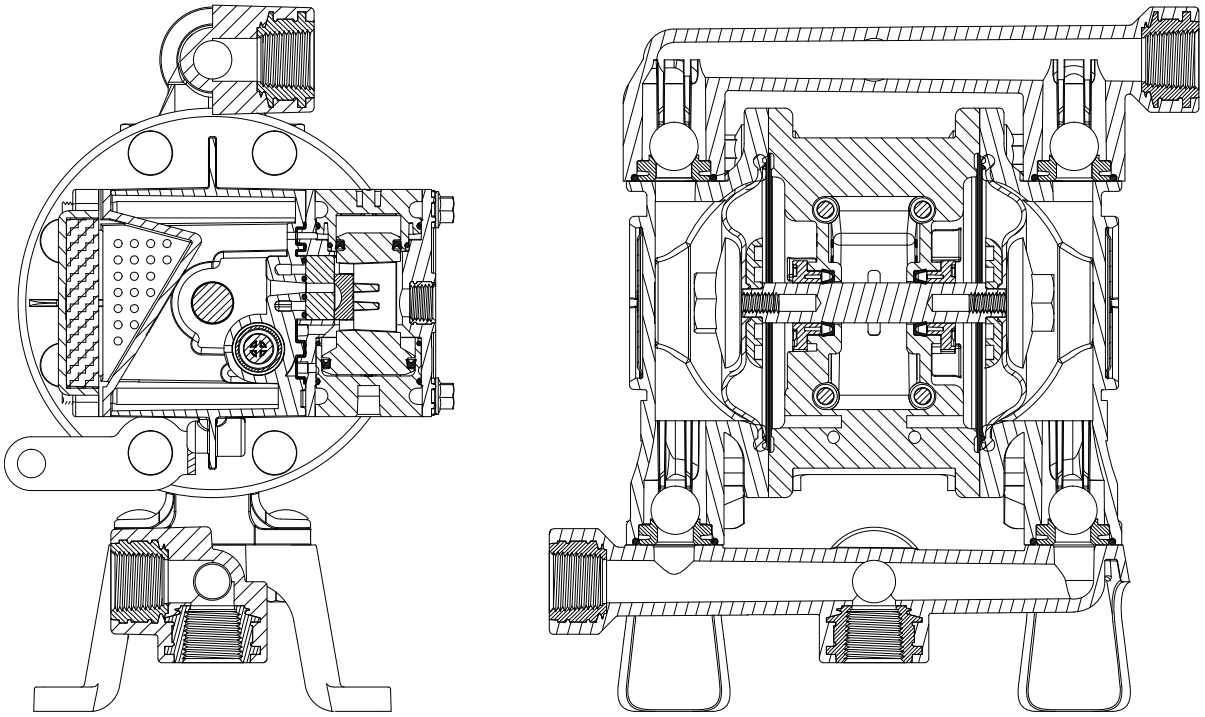

Figure 2

• Hytrel®, Teflon® and Viton® are registered trademarks of the DuPont Company • Kynar® is a registered trademark of Arkema Inc. • ARO® is a registered trademark of Ingersoll-Rand Company • • Santoprene® is a registered trademark of Monsanto Company, licensed to Advanced Elastomer Systems, L.P. • Loctite® and 242® are registered trademarks of Henkel Loctite Corporation • • Lubriplate® is a registered trademark of Lubriplate Division (Fiske Brothers Refining Company) •

PARTS LIST / PD05P-XXX-XXX-B FLUID SECTION

❶ 637427-XX Fluid section service kit includes: Balls (see Ball Option, refer to -XX in chart below), Diaphragms (see Diaphragm Option, refer to -XX in chart below) and item 19 (listed below) plus items 144, 174 and 94276 Lubriplate® FML-2 grease (pages 6).

SEAT OPTIONS PD05P-XXX-XXX-B				BALL OPTIONS PD05P-XXX-XXX-B							
"21"				❶ "22" (3/4" diameter)							
-XXX	Seat	Qty	Mtl	-XXX	Ball	Qty	Mtl	-XXX	Ball	Qty	Mtl
-DXX	96572-2	(4)	[D]	-XAX	93100-E	(4)	[Sp]	-XTX	93100-4	(4)	[T]
-KXX	96572-3	(4)	[K]	-XCX	93100-C	(4)	[H]	-XUX	93100-8	(4)	[U]
-PXX	96572-1	(4)	[P]	-XGX	93100-2	(4)	[B]	-XVX	93100-3	(4)	[V]
-SXX	95917-1	(4)	[SS]	-XSX	93410-1	(4)	[SS]				

DIAPHRAGM OPTIONS PD05P-XXX-XXX-B										
	❶ Service Kit -XX = (Ball)	❶ "7"			❶ "8"			❶ "19" (3/32" x 1-5/16" o.d.)		
-XXX	-XX = (Diaphragm)	Diaphragm	Qty	Mtl	Diaphragm	Qty	Mtl	"O" Ring	Qty	Mtl
-XXA	637427-XA	93465	(2)	[Sp]	-----	---	---	93763	(4)	[E]
-XXC	637427-XC	93465-9	(2)	[H]	-----	---	---	Y325-122	(4)	[B]
-XXG	637427-XG	93465-G	(2)	[B]	-----	---	---	Y325-122	(4)	[B]
-XXT	637427-XT	93111	(2)	[T]	93465	(2)	[Sp]	93265	(4)	[T]
-XXU	637427-XU	93112	(2)	[U]	-----	---	---	93119	(4)	[U]
-XXV	637427-XV	93581-3	(2)	[V]	-----	---	---	Y327-122	(4)	[V]

MATERIAL CODE

[A] = Aluminum
[B] = Nitrile
[D] = Acetal
[E] = E.P.R.
[GA]= Groundable Acetal
[GFN] = Glass filled Nylon
[H] = Hytrel
[K] = Kynar PVDF
[P] = Polypropylene
[Sp] = Santoprene
[SS] = Stainless Steel
[T] = Teflon PTFE
[U] = Polyurethane
[V] = Viton

MANIFOLD / FLUID CAP MATERIAL OPTIONS PD05P-XXX-XXX-B

			Polypropylene				Kynar PVDF				Groundable Acetal			
			PD05P-XPS-		PD05P-XRS-		PD05P-XKS-		PD05P-XLS-		PD05P-XDS-		PD05P-XES-	
Item	Description (size)	Qty	Part No.	Mtl	Part No.	Mtl	Part No.	Mtl	Part No.	Mtl	Part No.	Mtl	Part No.	Mtl
❷ 6	Diaphragm Nut (5/16" - 18)	(2)	93103-7	[P]	93103-7	[P]	93103-4	[K]	93103-4	[K]	93103-3	[D]	93103-3	[D]
15	Fluid Cap	(2)	95732-1	[P]	95732-1	[P]	95732-3	[K]	95732-3	[K]	95732-2	[GA]	95732-2	[GA]
43	Ground Strap	(1)	-----	---	-----	---	-----	---	-----	---	92956-1	[SS]	92956-1	[SS]
57	Ground Kit Assembly (not shown)	(1)	-----	---	-----	---	-----	---	-----	---	66885-1		66885-1	
60	Inlet Manifold (N.P.T.F.)	(1)	95734-7	[P]	95734-1	[P]	95734-9	[K]	95734-3	[K]	95734-8	[GA]	95734-2	[GA]
	(BSP)	(1)	95734-10	[P]	95734-4	[P]	95734-12	[K]	95734-6	[K]	95734-11	[GA]	95734-5	[GA]
61	Outlet Manifold (N.P.T.F.)	(1)	95733-7	[P]	95733-1	[P]	95733-9	[K]	95733-3	[K]	95733-8	[GA]	95733-2	[GA]
	(BSP)	(1)	95733-10	[P]	95733-4	[P]	95733-12	[K]	95733-6	[K]	95733-11	[GA]	95733-5	[GA]
63	Pipe Plug (1/2 - 14 N.P.T. x 9/16")	(3)	-----	---	93897-1	[P]	-----	---	93897-3	[K]	-----	---	93897-2	[D]
	(R 1/2 [1/2 - 14 BSP taper])	(3)	-----	---	96478-1	[P]	-----	---	96478-3	[K]	-----	---	96478-2	[D]

COMMON PARTS

Item	Description (size)	Qty	Part No.	Mtl
❷ 1	Connecting Rod	(1)	96379	[SS]
5	Diaphragm Washer	(2)	94645	[GFN]
26	Flange Bolt (5/16" - 18 x 7/8")	(4)	96176	[SS]

Item	Description (size)	Qty	Part No.	Mtl
27	Bolt (5/16" - 18 x 1-1/4")	(20)	93095	[SS]
29	Hex Flange Nut (5/16" - 18)	(20)	93886	[SS]
77	Logo Plate	(2)	93264	[A]

DUAL INLET / DUAL OUTLET KITS 637440-X

			Polypropylene				Kynar PVDF				Groundable Acetal			
			637440-1 (N.P.T.)		637440-4 (BSP)		637440-3 (N.P.T.)		637440-6 (BSP)		637440-2 (N.P.T.)		637440-5 (BSP)	
Item	Description (size)	Qty	Part No.	Mtl	Part No.	Mtl	Part No.	Mtl	Part No.	Mtl	Part No.	Mtl	Part No.	Mtl
17	Dual Inlet Manifold	(2)	95914-1	[P]	95914-4	[P]	95914-3	[K]	95914-6	[K]	95914-2	[GA]	95914-5	[GA]
18	Dual Inlet Manifold	(2)	95915-1	[P]	95915-4	[P]	95915-3	[K]	95915-6	[K]	95915-2	[GA]	95915-5	[GA]
19	"O" Ring (3/32" x 1-5/16" o.d.)	(4)	93265	[T]	93265	[T]	93265	[T]	93265	[T]	93265	[T]	93265	[T]

❷ "Smart Parts", keep these items on hand in addition to the service kits for fast repair and reduction of down time.

FOR THE AIR MOTOR SECTION, SEE PAGES 6 AND 7.

☞ ASSEMBLY TORQUE REQUIREMENTS ☜

NOTE: DO NOT OVERTIGHTEN FASTENERS.

(6) diaphragm nut, 95 - 105 in. lbs (10.7 - 11.9 Nm).

(26) bolt and (29) nut, 50 - 60 in. lbs (5.6 - 6.8 Nm), alternately and evenly, then re-torque after initial run-in.

LUBRICATION / SEALANTS

① **Apply Lubriplate FML-2 grease to all "O" rings, "U" cups and mating parts.**
② **Apply pipe sealant to threads.**
③ **Apply anti-seize compound to threads and bolt and nut flange heads which contact pump case when using stainless steel fasteners.**
④ **Apply Loctite® 242® to threads.**

Note: Lubriplate FML-2 is a white food grade petroleum grease.

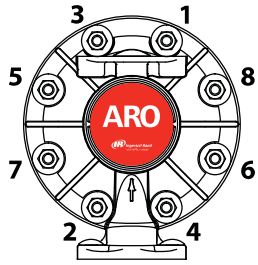

Torque Sequence

Figure 3

COLOR CODE		
Material	Diaphragm Color	Ball Color
Hytrel	Cream	Black (•)
Nitrile	Black	Red (•)
Polyurethane	Clear	Red
Santoprene	Tan	Tan
Teflon PTFE	White	White
Viton	Yellow (•)	Yellow (•)
		(•) Dot

View for PD05P-XXS-XXT-B (Teflon diaphragm) configuration only.

PARTS LIST / PD05P-XXX-XXX-B AIR MOTOR SECTION

❸ Indicates parts included in 637428 air section service kit.

AIR MOTOR PARTS LIST

Item	Description (size)	Qty	Part No.	Mtl
101	Center Body	(1)	96315	[PPG]
103R	Cover (right side)	(1)	96091	[D]
103L	Cover (left side)	(1)	96351	[D]
107	Plug, Small	(1)	96353	[D]
111	Major Valve Spool	(1)	95919	[D]
118	Actuator Pin	(2)	97111	[SS]
❸ 121	Washer	(2)	96092	[D]
123	Screw (#4 - 20 x 1/2")	(8)	96093	[SS]
129	Muffler Assembly	(1)	67367	[PPG]
❹ 129	Exhaust Cover (optional)	(1)	67366	[PPG]
❹ 130	Gasket (optional)	(1)	93107	[Sy]
❸ 132	Air Manifold Gasket	(1)	96214-1	[B]
134	Flange Bolt (1/4" - 20 x 5-3/4")	(4)	94871	[SS]
135	Valve Block	(1)	96204	[PPG]
136	Plug, Large	(1)	96352	[D]
❸ 137	"O" Ring (1/16" x 1-5/8" o.d.)	(3)	Y325-29	[B]
❸ 138	"U" Cup Packing (1/8" x 1" o.d.)	(1)	94395	[U]
❸ 139	"U" Cup Packing (1/8" x 1-7/16" o.d.)	(1)	96383	[U]
140	Valve Insert	(1)	93276	(Ck)
141	Valve Plate	(1)	96173	(Ck)
❶❸ 144	"U" Cup Packing (3/16" x 1" o.d.)	(2)	Y187-48	[B]
❸ 166	"O" Ring (1/16" x 1-1/4" o.d.)	(1)	Y325-24	[B]
❸ 167	Pilot Piston (includes 168 and 169)	(1)	67382	[D]
168	"O" Ring (1/16" x 7/16" o.d.)	(2)	96459	[U]
169	"U" Cup Packing (1/8" x 5/8" o.d.)	(1)	96384	[U]
170	Spool Bushing	(1)	96090	[D]
❸ 171	"O" Ring (1/16" x 13/16" o.d.)	(2)	Y325-17	[B]
❸ 173	"O" Ring (3/32" x 7/8" o.d.)	(2)	Y325-115	[B]
❶❸ 174	"O" Ring (3/32" x 11/32" o.d.)	(2)	Y325-105	[B]
❸ 200	Porting Gasket	(1)	96364	[B]
201	Muffler (optional)	(1)	93110	[C]
❹ 232	"O" Ring (1/16" x 3/8" o.d.) (optional)	(4)	Y325-10	[B]
❹	Ported Exhaust Kit (includes items 129, 130 and 232) (optional)	(1)	637438	---
❶ ❸	Lubriplate FML-2 grease	(1)	94276	
	Lubriplate Grease Packets (10)		637308	

❶ Items included in fluid section service kit, see page 4.

MATERIAL CODE

[B] = Nitrile
[C] = Carbon Steel
[Ck] = Ceramic
[D] = Acetal
[PPG] = Glass filled Polypropylene
[SS] = Stainless Steel
[Sy] = Syn-Seal
[U] = Polyurethane

DIAPHRAGM PUMP SERVICE

GENERAL SERVICE NOTES:

- Inspect and replace old parts with new parts as necessary. Look for deep scratches on metallic surfaces, and nicks or cuts in "O" rings.
- Tools needed to complete disassembly and repair:
  - 7/8" socket or wrench, 1/2" socket or wrench, 3/8" socket or wrench, 3/8" Allen wrench, T-10 Torx screwdriver, torque wrench (measuring inch pounds), "O" ring pick.

FLUID SECTION DISASSEMBLY

1. Remove (61) top manifold.
2. Remove (19) "O" rings, (21) seats and (22) balls.
3. Remove (60) bottom manifold.
4. Remove (19) "O" rings, (21) seats and (22) balls.
5. Remove (15) fluid caps.
6. Remove (6) diaphragm nut, (7) or (7 / 8) diaphragms and (5) washer.
7. Remove (1) connecting rod from air motor.
8. Carefully remove remaining (6) diaphragm nut, (7) or (7 / 8) diaphragms and (5) washer from (1) connecting rod. Do not mar surface of connecting rod.

FLUID SECTION REASSEMBLY

- Reassemble in reverse order.
- Lubricate (1) connecting rod with Lubriplate or equivalent "O" ring lubricant.
- Connecting rod (1) should be installed using 96571 bullet, included in service kit.
- Install (5) washers with i.d. chamfer toward diaphragm.
- When replacing Teflon diaphragms, install the 93465 Santoprene diaphragm behind the Teflon diaphragm.

AIR MOTOR SECTION SERVICE

Service is divided into two parts - 1. Pilot Valve, 2. Major Valve.

- Air Motor Section service is continued from Fluid Section repair.

PILOT VALVE DISASSEMBLY

1. Remove (123) screws, releasing (103) covers, (121) washers, (118) actuator pins and (167) pilot piston.
2. Remove (170) spool bushing and inspect inner bore of bushing for damage.

PILOT VALVE REASSEMBLY

1. Clean and lubricate parts not being replaced from service kit.
2. Assemble (171) "O" rings to (170) bushing and assemble bushing into (101) center body.
3. Lubricate and assemble (167) pilot piston assembly into (170) bushing.
4. Assemble (173 and 174) "O" rings and (121) washers to (103) covers, then insert (118) actuator pins through assembly.
5. Assemble (144) "U" cups (note the lip direction) and (103) covers to (101) center body, securing with (123) screws. NOTE: tighten (123) screws to 4 - 6 in. lbs (0.45 - 0.68 Nm).

MAJOR VALVE DISASSEMBLY

1. Unthread (134) bolts, releasing (129) muffler assembly.
2. Pull (135) valve block and components from (101) center body.
3. Remove (132) gasket, (141) valve plate and (140) valve insert from (135) valve block.
4. Remove (134) bolts, releasing (107 and 136) plugs and (111) spool.

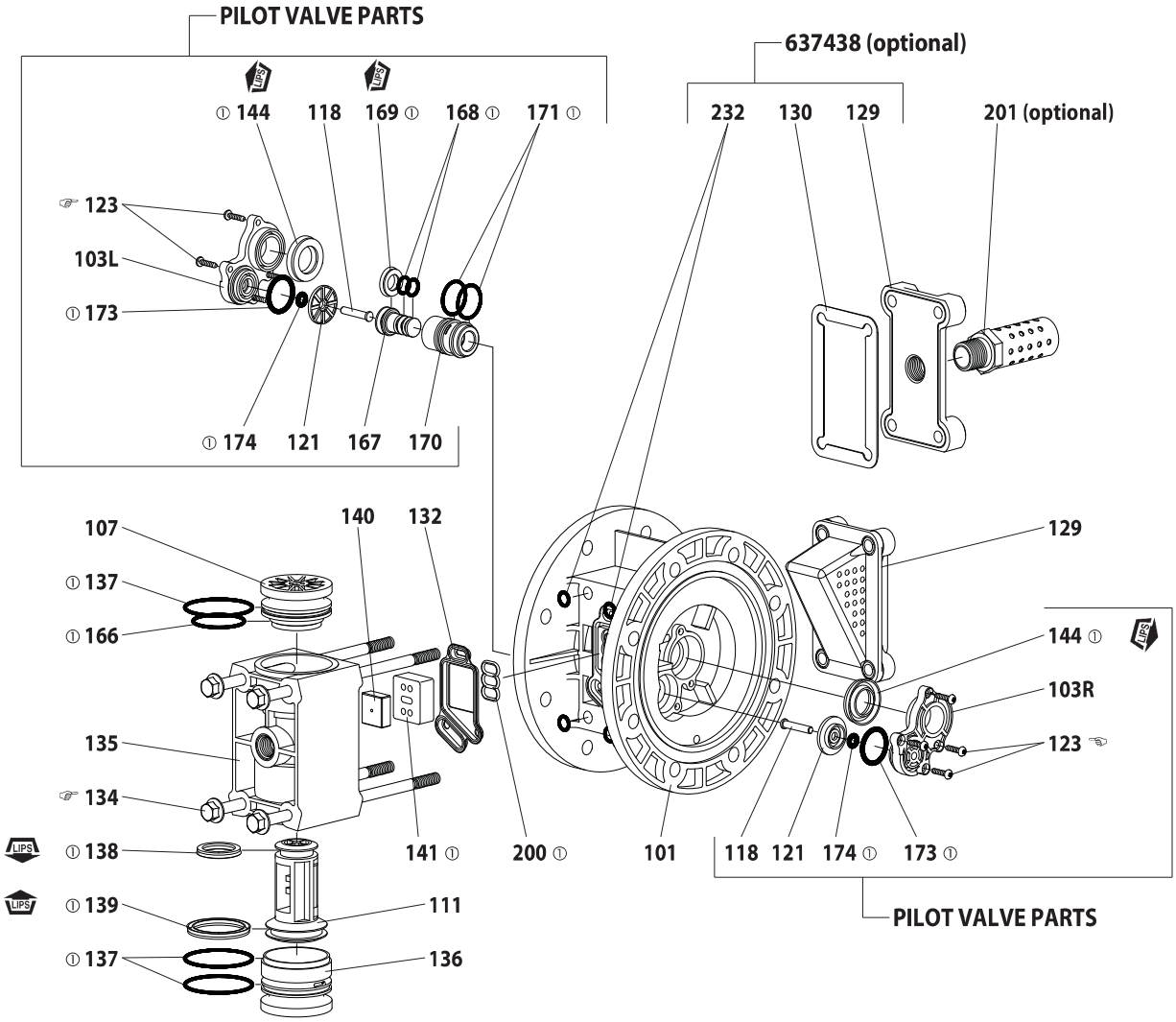

MAJOR VALVE

Figure 4

☞ ASSEMBLY TORQUE REQUIREMENTS ☜

NOTE: DO NOT OVERTIGHTEN FASTENERS.

(123) screw, 4 - 6 in. lbs (0.45 - 0.68 Nm).

(134) bolt, torque to 15 - 20 in. lbs (1.7 - 2.3 Nm), wait 10 minutes, then re-torque to 15 - 20 in. lbs (1.7 - 2.3 Nm).

LUBRICATION / SEALANTS

① Apply Lubriplate FML-2 grease to all "O" rings, "U" cups and mating parts.

MAJOR VALVE REASSEMBLY

1. Assemble new (139 and 138) "U" cups on (111) spool - **LIPS MUST FACE EACH OTHER**.
2. Assemble (137) "O" rings to (136) large plug.
3. Assemble (137 and 166) "O" rings to (107) small plug.
4. Insert (111) spool into (136) large plug, then insert (136) large plug into (135) valve block, being sure the (111) spool is rotated to accept (140) valve insert.
5. Assemble (107) small plug into (135) valve block.
6. Assemble (140) valve insert and (141) valve plate to (135) valve block. NOTE: Assemble (140) valve insert with "dished" side toward (141) valve plate. Assemble (141) valve plate with identification dot toward (132) gasket.
7. Assemble (132 and 200) gaskets, (135) valve block and (129) muffler assembly to (101) center body, securing with (134) bolts. NOTE: Tighten (134) bolts to 15 - 20 in. lbs (1.7 - 2.3 Nm).

TROUBLE SHOOTING

Product discharged from exhaust outlet.
- Check for diaphragm rupture.
- Check tightness of (6) diaphragm nut.

Air bubbles in product discharge.
- Check connections of suction plumbing.
- Check "O" rings between intake manifold and fluid caps.
- Check tightness of (6) diaphragm nut.

Motor blows air out main exhaust when stalled on either stroke.
- Check "U" cups on (111) spool in major valve.
- Check (141) valve plate and (140) insert for wear.
- Check (169) "U" cup on (167) pilot piston.

Low output volume.
- Check air supply.
- Check for plugged outlet hose.
- For the pump to prime itself, it must be mounted in the vertical position so that the balls will check by gravity.
- Check for pump cavitation - suction pipe should be sized at least as large as the inlet thread diameter of the pump for proper flow if high viscosity fluids are being pumped. Suction hose must be a non-collapsing type, capable of pulling a high volume.
- Check all joints on the inlet manifolds and suction connections. These must be air tight.
- Inspect the pump for solid objects lodged in the diaphragm chamber or the seat area.

DIMENSIONAL DATA

Dimensions shown are for reference only, they are displayed in inches and millimeters (mm).

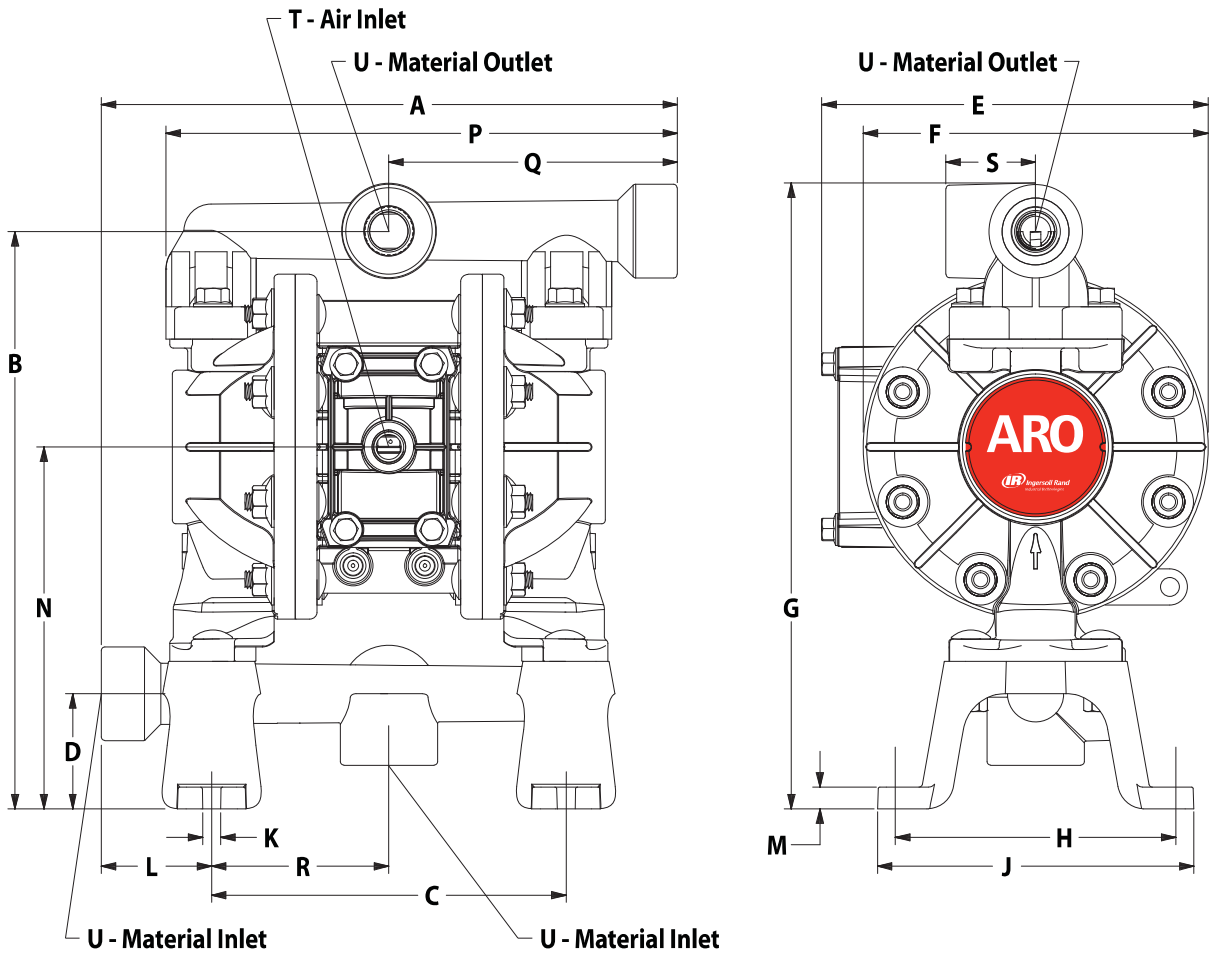

DIMENSIONS

A - 10-1/32" (254.8 mm)	F - 6-1/32" (153.1 mm)	L - 1-15/16" (48.9 mm)	R - 3-3/32" (78.5 mm)
B - 10-3/32" (256.1 mm)	G - 10-29/32" (276.8 mm)	M - 3/8" (9.6 mm)	S - 1-9/16" (39.7 mm)
C - 6-3/16" (157.1 mm)	H - 4-29/32" (124.2 mm)	N - 6-11/32" (160.5 mm)	T - 1/4 - 18 P.T.F. SAE Short
D - 2" (51.0 mm)	J - 5-17/32" (140.2 mm)	P - 8-29/32" (225.9 mm)	U - see below
E - 6-3/4" (171.0 mm)	K - 5/16" (8.0 mm)	Q - 5-1/32" (127.4 mm)	

Pump Model	"U" Material Inlet / Outlet
PD05P-AXS-XXX-B	1/2 - 14 N.P.T.F. - 1
PD05P-BXS-XXX-B	Rp 1/2 (1/2 - 14 BSP, parallel)

Figure 5

General Service - 2/2 Normally Closed 1/2"

Pipe Size (in)	Orifice (in)	Cv Flow	Operating Pressure Differential (psi)				Max. Fluid Temp.°F	Valve Catalog Number	Body Material	Sealing Material	Voltage	Valve Order Code	Wattage	Approvals		Rebuild Kit Order Code	Replacement Coil Order Code	Approx. Shipping Weight (lbs.)
			Min.	Max. Air	Max. Water	Max. Light Oil								UL	FM			
2/2 Normally Closed																		
1/2	7/16	2.2	5	40	40	-	150	8210G015	BR	NBR	24/DC	21851	11.6	●	-	302374	238710-006-D*	2.0
		2.2	5	150	125	-	180	8210G015	BR	NBR	120/60,110/50	20126	6.1	●	-	302275	238210-032-D*	2.0
		2.2	5	150	125	-	180	8210G015	BR	NBR	24/60	20130	6.1	●	-	302275	238210-005-D*	2.0
		2.2	5	150	125	-	180	8210G015	BR	NBR	240/60,220/50	20128	6.1	●	-	302275	238210-058-D*	2.0
		2.2	5	150	125	-	180	EF8215G015	BR	NBR	120/60,110/50	20127	6.1	●	-	302275	238214-032-D*	2.0
		2.2	5	150	125	-	180	8210G037	SS	NBR	120/60,110/50	20179	6.1	●	-	302327	238210-032-D*	2.0
		2.2	5	150	125	-	180	EF8210G037	SS	NBR	120/60,110/50	20181	6.1	●	-	302327	238214-032-D*	2.0
		2.8	0	4	6	-	180	8030G016	BR	NBR	120/60,110/50	20010	6.1	❍	●	302789	238210-032-D*	2.7
		2.8	0	15	15	-	200	8030G017	BR	NBR	120/60	21443	16.1	❍	-	302790	272610-032-D*	2.7
		2.8	0	15	-	-	180	8030G017VH	BR	NBR	120/60	21444	16.1	-	-	302790-VH	272610-032-D*	2.7
	3/8	3.2	25	1500	1500	1500	200	8223G003	BR	NYLON	120/60,110/50	20359	17.1	-	-	302315	238610-132-D*	3.4
		3.2	25	1500	1500	1500	200	8223G010	SS	PTFE	120/60,110/50	20364	17.1	-	-	302322	238610-132-D*	3.4
	17/32	4.5	5	230	230	230	195	SC8238T405	BR	BR	120/60	21900	4.0	❑	-	323457	43005573	2.0
		4.5	5	230	230	230	195	SC8238T405	BR	BR	24/60	21901	4.0	❑	-	323457	43005582	2.0
	5/8	4	0	150	150	-	180	8210G094	BR	NBR	120/60,110/50	20229	10.1	❍	-	302272	238610-032-D*	3.2
		4	0	150	150	-	180	8210G094	BR	NBR	24/60	20246	10.1	❍	-	302272	238610-005-D*	3.2
		4	0	150	150	-	180	8210G094	BR	NBR	240/60,220/50	20243	10.1	❍	-	302272	238610-058-D*	3.2
		4	0	150	150	-	180	EF8210G094	BR	NBR	120/60,110/50	20236	10.1	❍	-	302272	238214-032-D*	3.2
		4	0	150	150	-	180	JKF8210G094	BR	NBR	120/60,110/50	20242	10.1	❍	-	302272	238612-032-*	3.2
		4	0	150	150	-	180	JSF8210G094	BR	NBR	120/60,110/50	21778	10.1	❍	-	302272	238612-032-*	3.2
		4	0	150	150	-	180	SC8210G094	BR	NBR	120/60,110/50	21031	10.1	❍	-	302272	238612-032-*	3.2
		4	0	150	150	-	180	8210G094MO	BR	NBR	120/60,110/50	20231	10.1	❍	-	302272-MO	238610-032-D*	3.2
		4	0	150	150	-	180	8210G094V	BR	FKM	120/60,110/50	20233	10.1	❍	-	302272-V	238610-032-D*	3.2
		4	0	150	-	-	180	8210G094N	BR	NBR	120/60,110/50	20232	10.1	❍	-	302272-N	238610-032-D*	3.2
		4	0	40	40	-	150	8210G094	BR	NBR	24/DC	20248	11.6	❍	-	302372	238710-006-D*	3.2
		4	0	40	40	-	150	8210G094	BR	NBR	12/DC	20247	11.6	❍	-	302372	238710-004-D*	3.2
		4	0	40	40	-	150	SC8210G094	BR	NBR	24/DC	21621	11.6	❍	-	302372	238712-006-*	3.2
		4	0	150	150	125	175	8210G087	SS	NBR	120/60,110/50	20201	17.1	●	-	302328	238610-132-D*	3.3
		4	0	150	150	125	175	EF8210G087	SS	NBR	120/60,110/50	20204	17.1	●	-	302328	238614-132-D*	3.3
		4	0	150	150	125	175	EF8210G087V	SS	FKM	120/60,110/50	20206	17.1	●	-	302328-V	238614-132-D*	3.3
		4	0	150	150	-	175	8210G087E	SS	EPDM	120/60,110/50	20202	17.1	-	-	302328-E	238610-132-D*	3.3
		4	0	40	40	-	150	8210G087	SS	NBR	24/DC	21722	11.6	●	-	302423	238710-006-D*	3.3
		4	0	40	40	-	150	EF8210G087	SS	NBR	24/DC	20209	11.6	●	-	302423	238714-006-D*	3.2
		4	5	200	150	135	180	8210G002	BR	NBR	120/60,110/50	20043	6.1	❍	-	302273	238210-032-D*	3.2
		4	5	200	150	135	180	8210G002	BR	NBR	24/60	20058	6.1	❍	-	302273	238210-005-D*	3.2
		4	5	200	150	135	180	8210G002	BR	NBR	240/60,220/50	20053	6.1	❍	-	302273	238210-058-D*	3.2
		4	5	200	150	135	180	8210G002	BR	NBR	480/60,440/50	20056	6.1	❍	-	302273	238210-088-D*	3.2
		4	5	200	150	135	180	EF8210G002	BR	NBR	120/60,110/50	20049	6.1	❍	-	302273	238214-032-D*	3.2
		4	5	200	150	135	180	EF8210G002MO	BR	NBR	120/60,110/50	20050	6.1	❍	-	302273-MO	238214-032-D*	3.2
		4	5	200	150	135	180	JKF8210G002	BR	NBR	120/60,110/50	20051	6.1	❍	-	302273	238212-032-*	3.2
		4	5	200	150	135	180	SC8210G002	BR	NBR	120/60,110/50	20995	6.1	❍	-	302273	238212-032-*	3.2
		4	5	200	150	135	180	JSF8210G002	BR	NBR	120/60,110/50	20989	6.1	●	-	302273	238212-032-*	3.2
		4	5	200	150	135	180	8210G002MO	BR	NBR	120/60,110/50	20046	6.1	●	-	302273-MO	238210-032-D*	3.2
		4	5	200	150	135	180	8210G002V	BR	FKM	120/60,110/50	20048	6.1	-	-	302273-V	238210-032-D*	3.2
		4	5	125	-	-	140	8210G002Q	BR	NBR	120/60	21311	15.1	❑	-	304006	270110-032-D*	3.2
		4	5	125	100	100	150	8210G002	BR	NBR	24/DC	20062	11.6	❍	-	302373	238710-006-D*	3.2
		4	5	125	100	100	150	8210G002	BR	NBR	12/DC	20061	11.6	❍	-	302373	238710-004-D*	3.2
		4	5	125	100	100	150	EF8210G002	BR	NBR	24/DC	20063	11.6	❍	-	302373	238714-006-D*	3.2
		4	5	125	100	100	150	SC8210G002	BR	NBR	24/DC	21134	11.6	❍	-	302373	238712-006-*	3.2
		4	5	300	300	300	175	8210G007	BR	NBR	120/60,110/50	20095	17.1	❑	-	302274	238610-132-D*	3.2
		4	5	300	300	300	175	EF8210G007	BR	NBR	120/60,110/50	20098	17.1	❑	-	302274	238614-132-D*	3.2
	3/4	4.4	0	50	-	-	125	8215G020	AL	NBR	120/60,110/50	20290	10.1	❍	●	302350	238610-032-D*	2.8
		4.4	0	50	-	-	125	EF8215G020	AL	NBR	120/60,110/50	20292	10.1	❍	●	302350	238614-032-D*	2.8
		4.4	0	50	-	-	104	SC8215G020	AL	NBR	120/60,110/50	21785	10.1	-	-	302350	238612-032-*	2.8
		4.4	0	25	-	-	104	8215G020	AL	NBR	12/DC	20294	11.6	❍	●	302430	238710-004-D*	2.8

Section 3.6.11

Dewatering System Level Switch

Ktech INDUSTRIAL PRODUCTS INC.

Model SM4001 Overfill Protection Device Installation Instructions
Part No.: SM4001-CXEP

CAUTION: REFER TO INSTRUCTIONS BEFORE OPERATING OR SERVICING SWITCH.
Construction: 316 stainless steel body with a .66" dia. stainless steel float, ½" NPT bushing, explosion proof J-Box.
The contact arrangement can be changed from Normally Open (NO) to Normally Closed (NC). The nut is marked with NC and NO. Tighten the switch such that the desired arrangement is indicated on the top face of the nut. The conductors are colour coded to identify each switch. The switch must be connected in series with a load.

DO NOT CONNECT THE SWITCH DIRECTLY ACROSS THE POWER SUPPLY.
The voltage / current product must not exceed the power rating.

Electrical Specifications

Maximum Switching Voltage Volts DC/AC	120
Maximum Switching Current Amps DC/AC	0.4
Maximum Switching Power Volt/Amps DC/AC	50
Operating Temperature Range	-25˚C to 125˚C -13˚F to 257˚F

LISTED
OVERFILL
PROTECTION
DEVICES
4YC9

Meets Standards:
Class 1 Division 1, Groups B,C,D
CSA C22.2 No. 1010-1 and ANSI/I SA S82-03
CSA C22.2 No. 30 and UL1203
Factory Sealed

Intertek
9700099

Normally Open Output

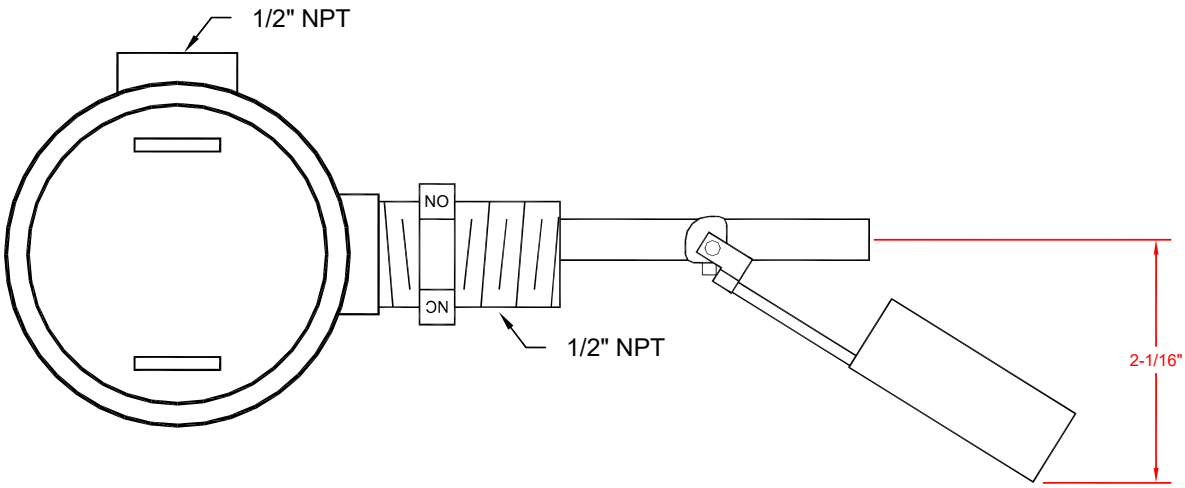

Normally Closed Output

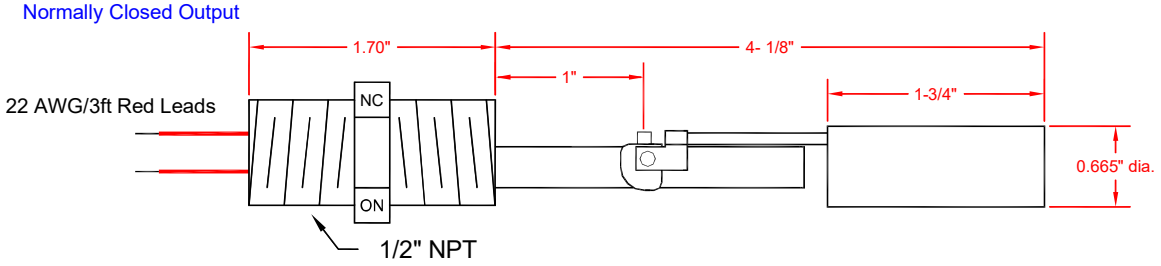

Section 3.7

Miscellaneous Equipment

Section 3.7.1

Air Compressor

CRAFTSMAN®

INSTRUCTION MANUAL | GUIDE D'UTILISATION | MANUAL DE INSTRUCTIONES

Air Compressor
Compresor de aire
Compresseur d'air

CMEC6150



IF YOU HAVE QUESTIONS OR COMMENTS, CONTACT US.
POUR TOUTE QUESTION OU TOUT COMMENTAIRE, NOUS CONTACTER.
SI TIENE DUDAS O COMENTARIOS, CONTÁCTENOS.

1-888-331-4569 WWW.CRAFTSMAN.COM

English ***(original instructions)*** 1

Français *(traduction de la notice d'instructions originale)* 11

Español *(traducido de las instrucciones originales)* 22

Definitions: Safety Alert Symbols and Words

This instruction manual uses the following safety alert symbols and words to alert you to hazardous situations and your risk of personal injury or property damage.

DANGER: *Indicates an imminently hazardous situation which, if not avoided,* ***will*** *result in* ***death or serious injury****.*

WARNING: *Indicates a potentially hazardous situation which, if not avoided,* ***could*** *result in* ***death or serious injury****.*

CAUTION: *Indicates a potentially hazardous situation which, if not avoided,* ***may*** *result in* ***minor or moderate injury****.*

(Used without word) Indicates a safety related message.

NOTICE: *Indicates a practice* ***not related to personal injury*** *which, if not avoided,* ***may*** *result in* ***property damage****.*

Fig. A

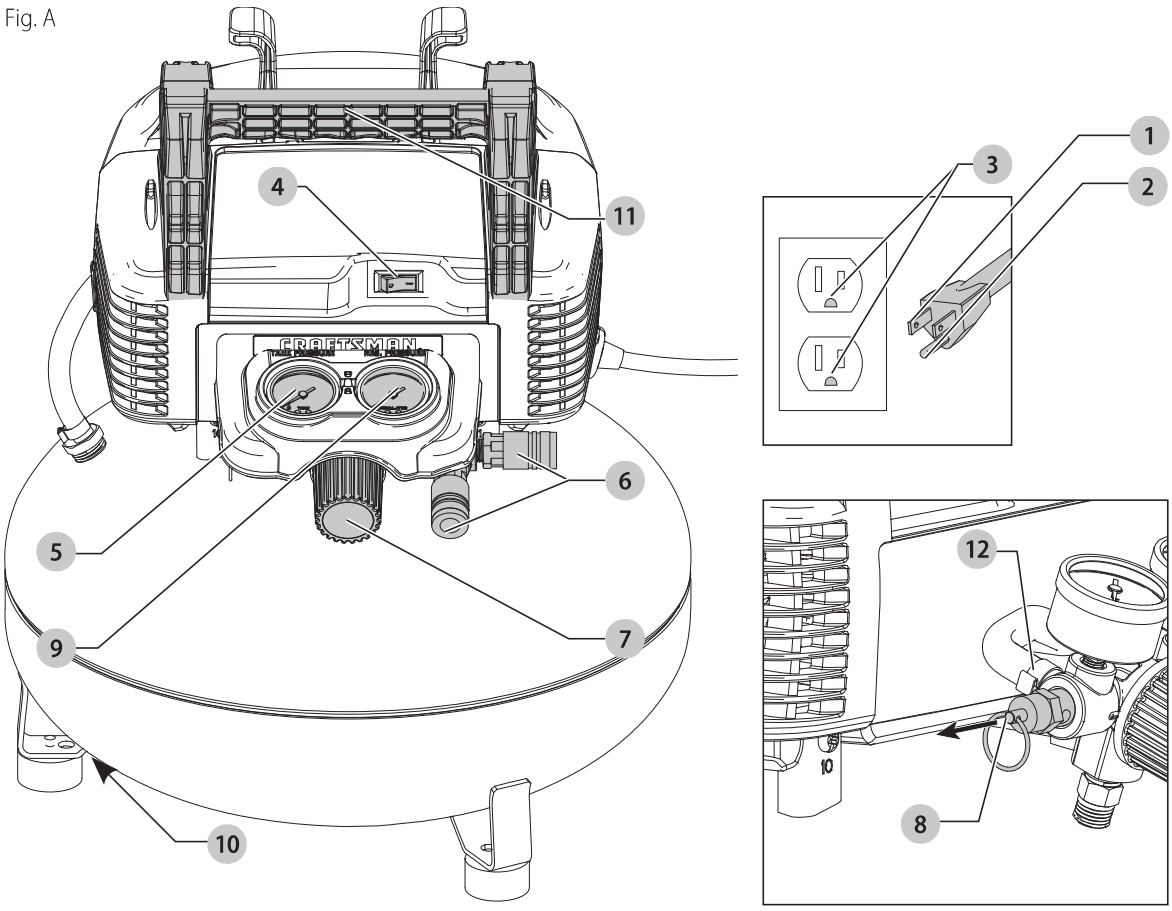

Components

1. Plug
2. Grounding pin
3. Grounded outlet
4. On/Off switch
5. Tank pressure gauge
6. Quick connects
7. Regulator knob
8. Safety valve
9. Outlet pressure gauge
10. Drain valve (not pictured)
11. Handle
12. Hose clamp

WARNING: Read all safety warnings and all instructions. *Failure to follow the warnings and instructions may result in electric shock, fire and/or serious injury.*

WARNING: *Never modify the product or any part of it. Damage or personal injury could result.*

WARNING: *To reduce the risk of injury, read the instruction manual.*

If you have any questions or comments about this or any product, call CRAFTSMAN toll free at: 1-888-331-4569.

Air Compressor
CMEC6150

IMPORTANT SAFETY INSTRUCTIONS

SAVE ALL WARNINGS AND INSTRUCTIONS FOR FUTURE REFERENCE

⚠ *DANGER: RISK OF EXPLOSION OR FIRE*

What can happen	How to prevent it
It is normal for electrical contacts within the motor and pressure switch to spark.	Always operate the compressor in a well ventilated area free of combustible materials, gasoline, or solvent vapors.
If electrical sparks from compressor come into contact with flammable vapors, they may ignite, causing fire or explosion.	If spraying flammable materials, locate compressor at least 20 feet (6.1 m) away from spray area. An additional length of hose may be required.
	Store flammable materials in a secure location away from compressor.
Restricting any of the compressor ventilation openings will cause serious overheating and could cause a fire.	Never place objects against or on top of compressor pump.
	Operate compressor in an open area at least 12" (30.5 cm) away from any wall or obstruction that would restrict the flow of fresh air to the ventilation openings.
	Operate compressor in a clean, dry well ventilated area. Do not operate unit indoors or in any confined area.
Unattended operation of this product could result in personal injury or property damage. To reduce the risk of fire, do not allow the compressor to operate unattended.	Always remain in attendance with the product when it is operating.
	Always turn off and unplug unit when not in use.

⚠ *CAUTION: RISK FROM NOISE*

What can happen	How to prevent it
Under some conditions and duration of use, noise from this product may contribute to hearing loss.	Always wear certified safety equipment: ANSI S12.6 (S3.19) hearing protection.

⚠ *DANGER: RISK TO BREATHING*
(Asphyxiation)

What can happen	How to prevent it
The compressed air directly from your compressor is not safe for breathing. The air stream may contain carbon monoxide, toxic vapors, or solid particles from the air tank. Breathing these contaminants can cause serious injury or death.	Air obtained directly from the compressor should never be used to supply air for human consumption. In order to use air produced by this compressor for breathing, suitable filters and in-line safety equipment must be properly installed. In-line filters and safety equipment used in conjunction with the compressor must be capable of treating air to all applicable local and federal codes prior to human consumption.
Exposure to chemicals in dust created by power sanding, sawing, grinding, drilling, and other construction activities may be harmful.	Work in an area with good ventilation. Read and follow the safety instructions provided on the label or safety data sheets for the materials you are spraying. Always use certified safety equipment: OSHA/MSHA/NIOSH respiratory protection designed for use with your specific application.
Sprayed materials such as paint, paint solvents, paint remover, insecticides, weed killers, may contain harmful vapors and poisons.	

⚠ *WARNING: RISK OF BURSTING*

Air Tank: On February 26, 2002, the U.S. Consumer Product Safety Commission published Release # 02-108 concerning air compressor tank safety:

Air compressor receiver tanks do not have an infinite life. Tank life is dependent upon several factors, some of which include operating conditions, ambient conditions, proper installations, field modifications, and the level of maintenance. The exact effect of these factors on air receiver life is difficult to predict.

If proper maintenance procedures are not followed, internal corrosion to the inner wall of the air receiver tank can cause the air tank to unexpectedly rupture allowing pressurized air to suddenly and forcefully escape, posing risk of injury to consumers.

Your compressor air tank must be removed from service by the end of the year shown on your tank warning label.

The following conditions could lead to a weakening of the air tank, and result in a violent air tank explosion:

⚠ ***WARNING:*** *Some dust contains chemicals known to the State of California to cause cancer, birth defects or other reproductive harm such as asbestos and lead in lead based paint.*

What can happen	How to prevent it
Failure to properly drain condensed water from air tank, causing rust and thinning of the steel air tank.	Drain air tank daily or after each use. If air tank develops a leak, replace it immediately with a new air tank or replace the entire compressor.
Modifications or attempted repairs to the air tank.	Never drill into, weld, or make any modifications to the air tank or its attachments. Never attempt to repair a damaged or leaking air tank. Replace with a new air tank.
Unauthorized modifications to the safety valve or any other components which control air tank pressure.	The air tank is designed to withstand specific operating pressures. Never make adjustments or parts substitutions to alter the factory set operating pressures.
Attachments & Accessories:	
Exceeding the pressure rating of air tools, spray guns, air operated accessories, tires, and other inflatables can cause them to explode or fly apart, and could result in serious injury.	Follow the equipment manufacturers recommendation and never exceed the maximum allowable pressure rating of attachments. Never use compressor to inflate small low pressure objects such as children's toys, footballs, basketballs, etc.
Tires:	
Over inflation of tires could result in serious injury and property damage.	Use a tire pressure gauge to check the tires pressure before each use and while inflating tires; see the tire sidewall for the correct tire pressure. **NOTE:** Air tanks, compressors and similar equipment used to inflate tires can fill small tires similar to these very rapidly. Adjust pressure regulator on air supply to no more than the rating of the tire pressure. Add air in small increments and frequently use the tire gauge to prevent over inflation.

WARNING: RISK OF ELECTRICAL SHOCK

What can happen	How to prevent it
Your air compressor is powered by electricity. Like any other electrically powered device, If it is not used properly it may cause electric shock.	Never operate the compressor outdoors when it is raining or in wet conditions.
	Never operate compressor with protective covers removed or damaged.
Repairs attempted by unqualified personnel can result in serious injury or death by electrocution.	Any repairs required on this product should be performed by authorized service center personnel.
Electrical Grounding: Failure to provide adequate grounding to this product could result in serious injury or death from electrocution. See ***Grounding Instructions*** under **Installation**.	Make certain that the electrical circuit to which the compressor is connected provides proper electrical grounding, correct voltage and adequate fuse protection.

WARNING: RISK FROM FLYING OBJECTS

What can happen	How to prevent it
The compressed air stream can cause soft tissue damage to exposed skin and can propel dirt, chips, loose particles, and small objects at high speed, resulting in property damage or personal injury.	Always wear certified safety equipment: ANSI Z87.1 eye protection (CAN/CSA Z94.3) with side shields when using the compressor.
	Never point any nozzle or sprayer toward any part of the body or at other people or animals.
	Always turn the compressor off and bleed pressure from the air hose and air tank before attempting maintenance, attaching tools or accessories.

WARNING: RISK OF HOT SURFACES

What can happen	How to prevent it
Touching exposed metal such as the compressor head, engine head, engine exhaust or outlet tubes, can result in serious burns.	Never touch any exposed metal parts on compressor during or immediately after operation. Compressor will remain hot for several minutes after operation. Do not reach around protective shrouds or attempt maintenance until unit has been allowed to cool.

WARNING: RISK OF INJURY FROM LIFTING

What can happen	How to prevent it
Serious injury can result from attempting to lift too heavy an object.	The compressor is too heavy to be lifted by one person. Obtain assistance from others before lifting.

WARNING: RISK FROM MOVING PARTS

What can happen	How to prevent it
Moving parts such as the pulley, flywheel, and belt can cause serious injury if they come into contact with you or your clothing.	Never operate the compressor with guards or covers which are damaged or removed
	Keep your hair, clothing, and gloves away from moving parts. Loose clothes, jewelry, or long hair can be caught in moving parts.
	Air vents may cover moving parts and should be avoided as well.

Attempting to operate compressor with damaged or missing parts or attempting to repair compressor with protective shrouds removed can expose you to moving parts and can result in serious injury.	Any repairs required on this product should be performed by authorized service center personnel.

WARNING: RISK OF UNSAFE OPERATION

What can happen	How to prevent it
Unsafe operation of your air compressor could lead to serious injury or death to you or others.	Review and understand all instructions and warnings in this manual.
	Become familiar with the operation and controls of the air compressor.
	Keep operating area clear of all persons, pets, and obstacles.
	Keep children away from the air compressor at all times.
	Do not operate the product when fatigued or under the influence of alcohol or drugs. Stay alert at all times.
	Never defeat the safety features of this product.
	Equip area of operation with a fire extinguisher.
	Do not operate machine with missing, broken, or unauthorized parts.
	Never stand on the compressor.

WARNING: RISK OF FALLING

What can happen	How to prevent it
A portable compressor can fall from a table, workbench, or roof causing damage to the compressor and could result in serious injury or death to the operator.	Always operate compressor in a stable secure position to prevent accidental movement of the unit. Never operate compressor on a roof or other elevated position. Use additional air hose to reach high locations.

Specifications

Model	CMEC6150
Bore	1.875" (47.6 mm)
Stroke	1.250" (31.8 mm)
Voltage/Hz–Single Phase	120/60
Minimum Branch Circuit Requirement	15 amps
Fuse Type	Time Delay
Air Tank Capacity	6 Gallons (22.7 liters)
Approximate Cut-in Pressure	120 psig
Approximate Cut-out Pressure	150 psig
SCFM @ 40 psig	3.7 *
SCFM @ 90 psig	2.6 *
Regulated Pressure Rating (Approximate)	3–150 psi
Quick Connect Type	1/4" (6.4 mm) Industrial
Duty Cycle	5 minutes on/5 minutes off

*Tested per ISO 1217

Refer to ***Glossary*** for abbreviations.

Glossary

Become familiar with these terms before operating the unit.

CFM: Cubic feet per minute.

SCFM: Standard cubic feet per minute; a unit of measure of air delivery.

PSIG: Pounds per square inch gauge; a unit of measure of pressure.

Code Certification: Products that bear one or more of the following marks: UL®, CUL, CULUS, ETL®, CETL, CETLUS, have been evaluated by OSHA certified independent safety laboratories and meet the applicable Standards for Safety.

Cut-In Pressure: While the motor is off, air tank pressure drops as you continue to use your accessory. When the tank pressure drops to a certain lower level the motor will restart automatically. The low pressure at which the motor automatically restarts is called "cut-in" pressure.

Cut-Out Pressure: When an air compressor is turned on and begins to run, air pressure in the air tank begins to build. It builds to a certain high pressure before the motor automatically shuts off, protecting your air tank from pressure higher than its capacity. The high pressure at which the motor shuts off is called "cut-out" pressure.

Branch Circuit: Circuit carrying electricity from electrical panel to outlet.

Duty Cycle: For proper operation of your air compressor, it is recommended that a 50% duty cycle be maintained; that is, the air compressor should not run more than 5 minutes in any 10 minute period.

ASSEMBLY AND ADJUSTMENTS

WARNING: To reduce the risk of serious personal injury, turn unit off and disconnect it from power source before making any adjustments or removing/installing attachments or accessories.
An accidental start-up can cause injury.

WARNING: Risk of unsafe operation. Unit cycles automatically when power is on. When performing maintenance, you may be exposed to voltage sources, compressed air, or moving parts. Personal injuries can occur. Before performing any maintenance or repair, disconnect power source from the compressor and bleed off all air pressure.

UNPACKING

Remove unit from carton and discard all packaging.

INSTALLATION

How To Set Up Your Unit

Location of the Air Compressor

- Locate the air compressor in a clean, dry and well ventilated area.
- The air compressor should be located at least 12" (30.5 cm) away from the wall or other obstructions that will interfere with the flow of air.
- The air compressor pump and shroud are designed to allow for proper cooling. The ventilation openings on the compressor are necessary to maintain proper operating temperature. Do not place rags or other containers on or near these openings.

Grounding Instructions (Fig. A)

WARNING: Risk of Electrical Shock. In the event of a short circuit, grounding reduces the risk of shock by providing an escape wire for the electric current. This air compressor must be properly grounded.

The portable air compressor is equipped with a cord having a grounding wire with an appropriate grounding plug ❶.

1. The cord set and plug ❶ with this unit contains a grounding pin ❷. This plug MUST be used with a grounded outlet ❸.
   IMPORTANT: The outlet being used must be installed and grounded in accordance with all local codes and ordinances.
2. Make sure the outlet being used has the same configuration as the grounded plug. DO NOT USE AN ADAPTER. Refer to Fig. A.
3. Inspect the plug and cord before each use. Do not use if there are signs of damage.
4. If these grounding instructions are not completely understood, or if in doubt as to whether the compressor is properly grounded, have the installation checked by a qualified electrician.

DANGER: Risk of Electrical Shock. IMPROPER GROUNDING CAN RESULT IN ELECTRICAL SHOCK.

- ***Do not modify the plug provided. If it does not fit the available outlet, a correct outlet should be installed by a qualified electrician.***
- ***Repairs to the cord set or plug MUST be made by a qualified electrician.***

Extension Cords

If an extension cord must be used, be sure it is:

- a 3-wire extension cord that has a 3-blade grounding plug, and a 3-slot receptacle that will accept the plug on the product
- in good condition
- no longer than 50' (15.2 m)
- 12 gauge (AWG) or larger. (Wire size increases as gauge number decreases. 10 AWG and 8 AWG may also be used. DO NOT USE 14 OR 16 AWG.)

NOTICE: *Risk of Property Damage. The use of an undersized extension cord will cause voltage to drop resulting in power loss to the motor and overheating. Instead of using an extension cord, increase the working reach of the air hose by attaching another length of hose to its end. Attach additional lengths of hose as needed.*

Voltage and Circuit Protection

Refer to ***Specifications*** for the voltage and minimum branch circuit requirements.

WARNING: *Risk of Overheating. Certain air compressors can be operated on a 15 amp circuit if the following conditions are met.*

- *Voltage supply to circuit must comply with the National Electrical Code.*
- *Circuit is not used to supply any other electrical needs.*
- *Extension cords comply with specifications.*
- *Circuit is equipped with a 15 amp circuit breaker or 15 amp time delay fuse.*
  NOTE: *If compressor is connected to a circuit protected by fuses, use only time delay fuses. Time delay fuses should be marked "D" in Canada and "T" in the US.*

If any of the above conditions cannot be met, or if operation of the compressor repeatedly causes interruption of the power, it may be necessary to operate it from a 20 amp circuit. It is not necessary to change the cord set.

OPERATION

WARNING: To reduce the risk of serious personal injury, turn unit off and disconnect it from power source before making any adjustments or removing/installing attachments or accessories. *An accidental start-up can cause injury.*

WARNING: Risk of unsafe operation. Unit cycles automatically when power is on. When performing maintenance, you may be exposed to voltage sources, compressed air, or moving parts. Personal injuries can occur. Before performing any maintenance or repair, disconnect power source from the compressor and bleed off all air pressure.

Know Your Air Compressor

READ THIS OWNER'S MANUAL AND SAFETY RULES BEFORE OPERATING YOUR UNIT. Compare the illustrations with your unit to familiarize yourself with the location of various controls and adjustments. Save this manual for future reference.

Description of Operation (Fig. A)

Become familiar with these controls before operating the unit.

On(I)/Off(O) Switch: Place this switch 4 in the On(I) position to provide automatic power to the pressure switch and Off(O) to remove power at the end of each use.

Pressure Switch (not shown): The pressure switch automatically starts the motor when the air tank pressure drops below the factory set "cut-in" pressure. It stops the motor when the air tank pressure reaches the factory set "cut-out" pressure.

Safety Valve: If the pressure switch does not shut off the air compressor at its "cut-out" pressure setting, the safety valve 8 will protect against high pressure by "popping out" at its factory set pressure (slightly higher than the pressure switch "cut-out" setting).

Tank Pressure Gauge: The tank pressure gauge 5 indicates the reserve air pressure in the tank.

Outlet Pressure Gauge: The outlet pressure gauge 9 indicates the air pressure available at the outlet side of the regulator. This pressure is controlled by the regulator and is always less than or equal to the tank pressure.

Regulator: Controls the air pressure shown on the outlet pressure gauge. Turn regulator knob 7 clockwise to increase pressure and counterclockwise to decrease pressure.

Cooling System (not shown): This compressor contains an advanced design cooling system. At the heart of this cooling system is an engineered fan. It is perfectly normal for this fan to blow air through the vent holes in large amounts. You know that the cooling system is working when air is being expelled.

Air Compressor Pump (not shown): Compresses air into the air tank. Working air is not available until the compressor has raised the air tank pressure above that required at the air outlet.

Drain Valve: The drain valve 10 is located at the base of the air tank and is used to drain condensation at the end of each use.

Check Valve (not shown): When the air compressor is operating, the check valve is "open", allowing compressed air to enter the air tank. When the air compressor reaches "cut-out" pressure, the check valve "closes", allowing air pressure to remain inside the air tank.

Motor Overload Protector (not shown): The motor has a thermal overload protector. If the motor overheats for any reason, the overload protector will shut off the motor. The motor must be allowed to cool down before restarting. To restart:

1. Set the On/Off switch to "Off" and unplug unit.
2. Allow the motor to cool.
3. Plug the power cord into the correct branch circuit receptacle.
4. Set the On/Off switch to "On" position.

Quick Connects : The quick connects 6 accepts industrial quick connect plugs. The two quick connect bodies allow the use of two tools at the same time.

How to Use Your Unit (Fig. A, B)

How to Stop

1. Set the On/Off switch 4 to "Off".
2. Unplug unit when not in use.

Before Starting

WARNING: Do not operate this unit until you read this instruction manual for safety, operation and maintenance instructions.

Before Each Start-Up

1. Set the On/Off switch 4 to "Off".
2. Plug the power cord into the correct branch circuit receptacle. (Refer to ***Voltage and Circuit Protection*** paragraph in the **Installation** section of this manual.)
3. Turn regulator knob 7 counterclockwise until fully closed. Ensure regulated pressure gauge reads 0 PSI (0 kPa).

Fig. B

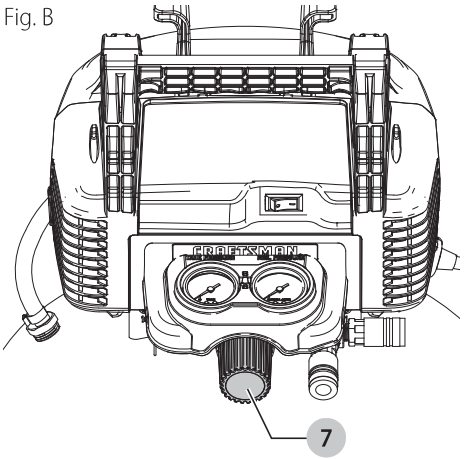

4. Attach hose and accessories.
5. Ensure all covers and labels are in place, legible (for labels) and securely mounted. Do not use compressor until all items have been verified.

WARNING: Risk of unsafe operation. Firmly grasp air hose in hand when installing or disconnecting to prevent hose whip.

WARNING: Risk of unsafe operation. Do not use damaged or worn accessories.

NOTE: This unit is equipped with quick connects 6. The hose or accessory being connected will require a quick connect plug.

WARNING: Risk of Bursting. Too much air pressure causes a hazardous risk of bursting. Check the manufacturer's maximum pressure rating for air tools and accessories. The regulator outlet pressure must never exceed the maximum pressure rating.

NOTICE: *Risk of property damage. Compressed air from the unit may contain water condensation and oil mist. Do not spray unfiltered air at an item that could be damaged by moisture. Some air tools and accessories may require filtered air. Read the instructions for the air tools and accessories.*

How to Start

1. Set the On/Off switch 4 to "On" and allow tank pressure to build. Motor will stop when tank pressure reaches "cut-out" pressure.
2. Turn regulator knob 7 clockwise to increase pressure and stop when desired pressure is reached.

WARNING: Risk of unsafe operation. If any unusual noise or vibration is noticed, stop the compressor immediately and have it checked by a trained service technician.

The compressor is ready for use.

MAINTENANCE

WARNING: To reduce the risk of serious personal injury, turn unit off and disconnect it from power source before making any adjustments or removing/installing attachments or accessories. *An accidental start-up can cause injury.*

WARNING: Risk of unsafe operation. Unit cycles automatically when power is on. When performing maintenance, you may be exposed to voltage sources, compressed air, or moving parts. Personal injuries can occur. Before performing any maintenance or repair, disconnect power source from the compressor and bleed off all air pressure.

Customer Responsibilities

	Before each use	Daily or after each use	See tank warning label
Check Safety Valve	X		
Drain Tank		X	
Remove tank from service			X[1]

1- For more information, call our Customer Care Center at 1–888–331–4569

NOTE: See **Operation** section for the location of controls.

To Check Safety Valve (Fig. C)

WARNING: Risk of Bursting. If the safety valve does not work properly, over-pressurization may occur, causing air tank rupture or an explosion.

WARNING: Risk from Flying Objects. Always wear certified safety equipment: ANSI Z87.1 eye protection (CAN/CSA Z94.3) with side shields.

Before starting compressor, pull the ring on the safety valve 8 to make sure that the safety valve operates freely. If the valve is stuck or does not operate smoothly, it must be replaced with the same type of valve.

Fig. C

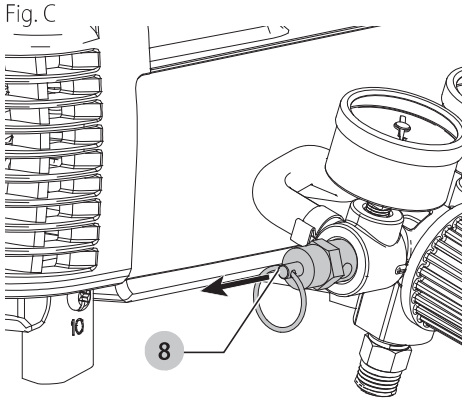

To Drain Tank (Fig. A, D)

WARNING: Risk of Unsafe Operation. Air tanks contain high pressure air. Keep face and other body parts away from outlet of drain. Use ANSI Z87.1 eye protection (CAN/CSA Z94.3) when draining as debris can be kicked up into face.

WARNING: Risk from noise. Always wear proper hearing protection during use. Under some conditions and duration of use, noise from this product may contribute to hearing loss.

NOTE: All compressed air systems generate condensate that accumulates in any drain point (e.g., tanks, filter, aftercoolers, dryers). This condensate contains lubricating oil and/or substances which may be regulated and must be disposed of in accordance with local, state, and federal laws and regulations.

WARNING: Risk of Bursting. Water will condense in the air tank. If not drained, water will corrode and weaken the air tank causing a risk of air tank rupture.

NOTICE: *Risk of Property Damage. Drain water from air tank may contain oil and rust which can cause stains.*

1. Set the On/Off switch 4 to "Off".
2. Turn the regulator knob 7 counterclockwise to set the outlet pressure to zero.
3. Remove the air tool or accessory.
4. Place a suitable container under the drain valve to catch discharge.
5. Pull ring on safety valve 8 allowing air to bleed from the tank until tank pressure is approximately 20 psi. Release safety valve ring.
6. Drain water from air tank by opening drain valve 10 on bottom of tank.

Fig. D

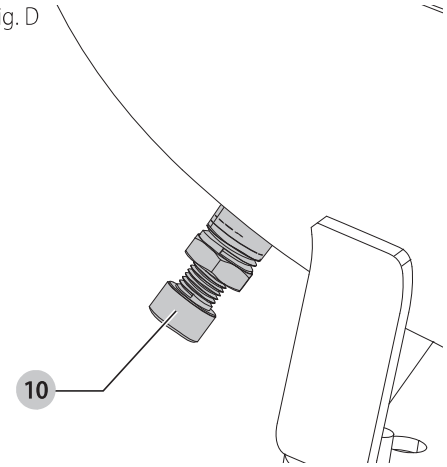

7. After the water has been drained, close the drain valve. The air compressor can now be stored.

NOTE: If drain valve is plugged, release all air pressure. The valve can then be removed, cleaned, the reinstalled.

Cleaning

WARNING: *Blow dirt and dust out of all air vents with clean, dry air at least once a week. To minimize the risk of eye injury, always wear ANSI Z87.1 approved eye protection when performing this.*

WARNING: *Never use solvents or other harsh chemicals for cleaning the non-metallic parts of the tool. These chemicals may weaken the plastic materials used in these parts. Use a cloth dampened only with water and mild soap. Never let any liquid get inside the tool; never immerse any part of the tool into a liquid.*

Repairs

WARNING: *To assure product SAFETY and RELIABILITY, repairs, maintenance and adjustment (including brush inspection and replacement, when applicable) should be performed by a CRAFTSMAN factory service center or a CRAFTSMAN authorized service center. Always use identical replacement parts.*

WARNING: *Risk of Unsafe Operation. Unit cycles automatically when power is on. When servicing, you may be exposed to voltage sources, compressed air, or moving parts. Before servicing unit unplug or disconnect electrical supply to the air compressor, bleed tank of pressure, and allow the air compressor to cool.*

To Replace Regulator (Fig. A, E)

1. Release all air pressure from air tank. See ***To Drain Tank*** in the **Maintenance** section.
2. Unplug unit.
3. Remove the console cover.
4. Using an adjustable wrench remove the safety valve **8** from the regulator manifold **7**.
5. Remove the hose by removing the hose clamp **12**. **NOTE:** The hose clamp is not reusable. You must purchase a new hose clamp.

Fig. E

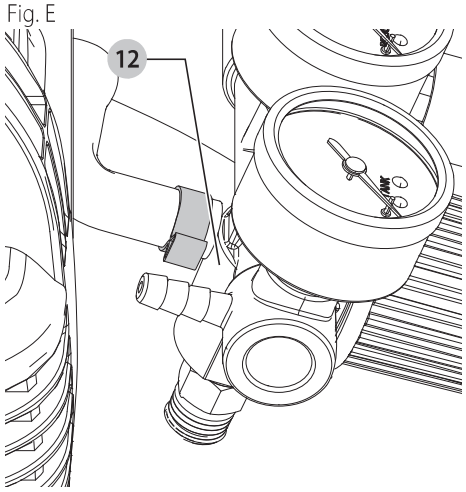

6. Remove three pump mounting screws securing pump.
7. Carefully lift pump up away from brackets and out of the way.
8. Using an adjustable wrench remove the regulator knob **7**.
9. Apply pipe sealant to new regulator manifold and assemble, tighten with wrench.
10. Reapply pipe sealant to safety valve.
11. Reassemble all components in reverse order of removal. Make sure to orient gauges to read correctly and use wrenches to tighten all components.

Storage

Before you store the air compressor, make sure you do the following:

1. Review the **Maintenance** section on the preceding pages and perform scheduled maintenance as necessary.
2. Drain water from air tank. See ***To Drain Tank*** under **Maintenance**.

WARNING: Risk of Bursting. Water will condense in the air tank. If not drained, water will corrode and weaken the air tank causing a risk of air tank rupture.

3. Protect the electrical cord and air hose from damage (such as being stepped on or run over). Wind air hose loosely around the compressor handle. Wrap electrical cord onto the cord wrap.
4. Store the air compressor in a clean and dry location.

Accessories

WARNING: *Since accessories, other than those offered by CRAFTSMAN, have not been tested with this product, use of such accessories with this tool could be hazardous. To reduce the risk of injury, only CRAFTSMAN recommended accessories should be used with this product.*

Recommended accessories for use with your tool are available at extra cost from your local dealer or authorized service center. If you need assistance in locating any accessory, please contact CRAFTSMAN, call **1-888-331-4569**.

Register Online

Thank you for your purchase. Register your product now for:

- **WARRANTY SERVICE:** Registering your product will help you obtain more efficient warranty service in case there is a problem with your product.
- **CONFIRMATION OF OWNERSHIP:** In case of an insurance loss, such as fire, flood or theft, your registration of ownership will serve as your proof of purchase.
- **FOR YOUR SAFETY:** Registering your product will allow us to contact you in the unlikely event a safety notification is required under the Federal Consumer Safety Act.

Register online at **www.craftsman.com/registration**

One Year Limited Warranty

CRAFTSMAN will repair or replace, without charge, any defects due to faulty materials or workmanship for one year from the date of purchase. This warranty does not cover part failure due to normal wear or tool abuse. For further detail of warranty coverage and warranty repair information, visit **www.craftsman.com** or call **1-888-331-4569**. This warranty does not apply to accessories or damage caused where repairs have been made or attempted by others. THIS LIMITED WARRANTY IS GIVEN IN LIEU OF ALL OTHERS, INCLUDING THE IMPLIED WARRANTY OF MERCHANTABILITY AND FITNESS FOR A PARTICULAR PURPOSE, AND EXCLUDES ALL INCIDENTAL OR CONSEQUENTIAL DAMAGES. Some states do not allow limitations on how long an implied warranty lasts or the exclusion or limitation of incidental or consequential damages, so these limitations may not apply to you. This warranty gives you specific legal rights and you may have other rights which vary in certain states or provinces.

90 DAY MONEY BACK GUARANTEE

If you are not completely satisfied with the performance of your CRAFTSMAN Power Tool or Nailer for any reason, you can return it within 90 days from the date of purchase with a receipt for a full refund – no questions asked.

LATIN AMERICA: This warranty does not apply to products sold in Latin America. For products sold in Latin America, see country specific warranty information contained either in the packaging, call the local company or see website for warranty information.

TROUBLESHOOTING

WARNING: Risk of Unsafe Operation. Unit cycles automatically when power is on. When servicing, you may be exposed to voltage sources, compressed air, or moving parts. Before servicing unit unplug or disconnect electrical supply to the air compressor, bleed tank of pressure, and allow the air compressor to cool.

PROBLEM	CAUSE	CORRECTION
Excessive tank pressure – safety valve pops off.	Pressure switch does not shut off motor when compressor reaches "cut-out" pressure.	Move On/Off lever to the "Off" position, if the outfit does not shut off contact a Trained Service Technician.
	Pressure switch "cut-out" too high.	Contact a Trained Service Technician.
Air leaks at fittings.	Tube fittings are not tight enough.	Tighten fittings where air can be heard escaping. Check fittings with soapy water solution. **Do Not Overtighten.**
Air leaks in air tank or at air tank welds.	Defective air tank.	Air tank must be replaced. Do not repair the leak. ***WARNING: Risk bursting. Do not drill into, weld or otherwise modify air tank or it will weaken. The tank can rupture or explode.***
Air leaks between head and valve plate.	Leaking seal.	Contact a Trained Service Technician.
Air leak from safety valve.	Possible defect in safety valve.	Operate safety valve manually by pulling on ring. If valve still leaks, it should be replaced.
Knocking Noise.	Possible defect in safety valve.	Operate safety valve manually by pulling on ring. If valve still leaks, it should be replaced.
Pressure reading on the regulated pressure gauge drops when an accessory is used.	It is normal for "some" pressure drop to occur.	If there is an excessive amount of pressure drop when the accessory is used, adjust the regulator following the instructions in the ***Description of Operation*** paragraph in the **Operation** Section. **NOTE:** Adjust the regulated pressure under flow conditions (while accessory is being used).
Compressor is not supplying enough air to operate accessories.	Prolonged excessive use of air.	Decrease amount of air usage.
	Compressor is not large enough for air requirement.	Check the accessory air requirement. If it is higher than the SCFM or pressure supplied by your air compressor, you need a larger compressor.
	Hole in hose.	Check and replace if required.
	Check valve restricted.	Have checked by a Trained Service Technician.
	Air leaks.	Tighten fittings.
Regulator knob has continuous air leak.	Damaged regulator.	Replace.
Regulator will not shut off air outlet.	Damaged regulator.	Replace.
Motor will not run.	Fuse blown, circuit breaker tripped.	Check fuse box for blown fuse and replace as necessary. Reset circuit breaker. Do not use a fuse or circuit breaker with higher rating than that specified for your particular branch circuit.
		Check for proper fuse. You should use a time delay fuse.
		Check for low voltage problem.
		Check the extension cord.
		Disconnect the other electrical appliances from circuit or operate the compressor on its own branch circuit.
	Extension cord is wrong length or gauge.	Check the extension cord.
	Loose electrical connections.	Check wiring connection inside terminal box.
	Faulty motor.	Have checked by a Trained Service Technician.
	Motor overload protection switch has tripped.	Refer to ***Motor Overload Protector*** under **Description of Operation**. If motor overload protection trips frequently, contact a Trained Service Technician.

Définitions : symboles et termes d'alarmes sécurité

Ces guides d'utilisation utilisent les symboles et termes d'alarmes sécurité suivants pour vous prévenir de situations dangereuses et de risques de dommages corporels
ou matériels.

DANGER : *indique une situation dangereuse imminente qui, si elle n'est pas évitée,* ***entraînera*** *la* ***mort ou des blessures graves****.*

AVERTISSEMENT : *indique une situation potentiellement dangereuse qui, si elle n'est pas évitée,* ***pourrait*** *entraîner la* ***mort ou des blessures graves****.*

ATTENTION : *indique une situation potentiellement dangereuse qui, si elle n'est pas évitée,* ***pourrait*** *entraîner des* ***blessures légères ou modérées****.*

(Si utilisé sans aucun terme) Indique un message propre à la sécurité.

AVIS : *indique une pratique ne posant* ***aucun risque de dommages corporels*** *mais qui par contre, si rien n'est fait pour l'éviter,* ***pourrait*** *poser des* ***risques de dommages matériels****.*

Fig. A

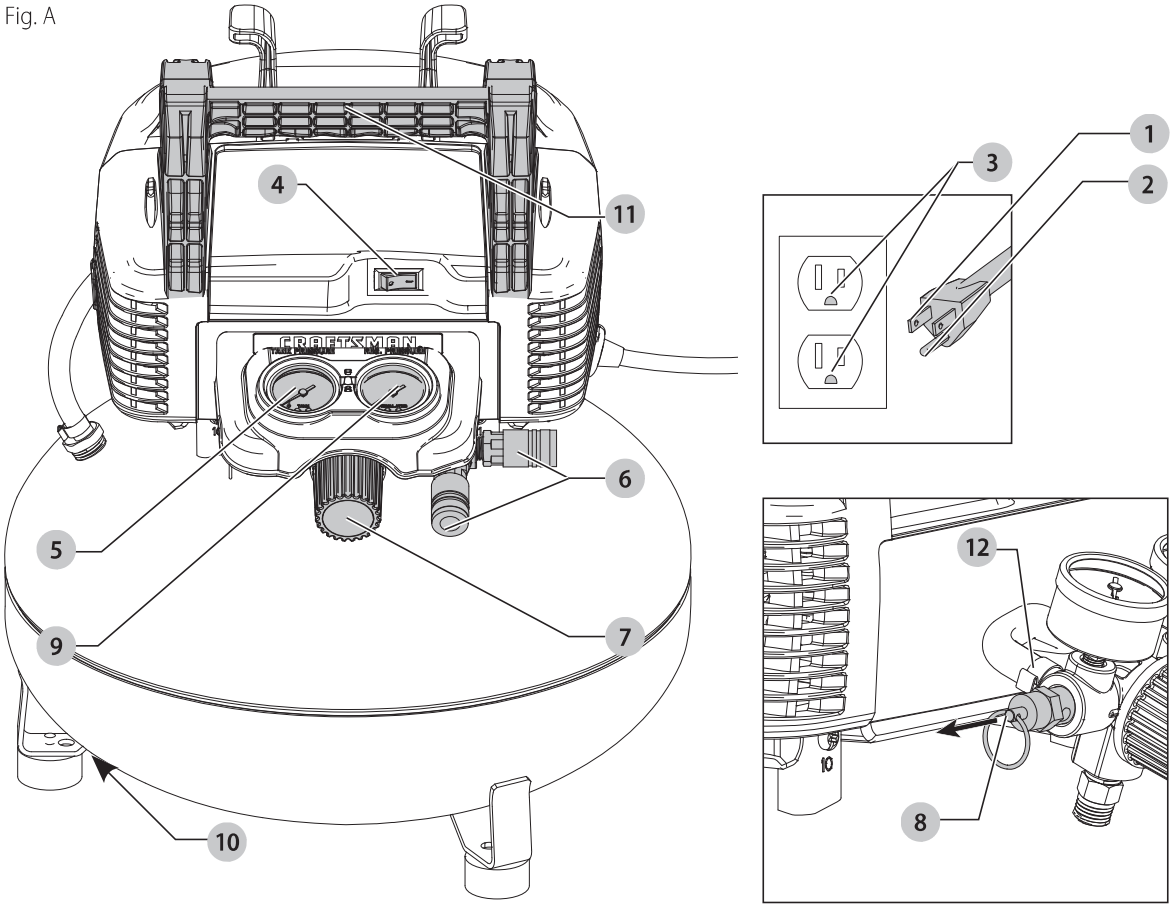

Components

1. Fiche appropriée de mise à la terre
2. Broche de mise à la terre
3. Prise de courant mise à la terre
4. L'interrupteur On/Off
5. Manomètre du réservoir
6. Raccords rapides
7. Régulateur
8. Soupape de sûreté
9. Manomètre de sortie
10. Robinet de vidange
11. Poignée
12. Collier du Boyau

AVERTISSEMENT : lire tous les avertissements de sécurité et toutes les directives. *Le non-respect des avertissements et des directives pourrait se solder par un choc électrique, un incendie et/ou une blessure grave.*

AVERTISSEMENT : *ne jamais modifier l'outil électrique ni aucun de ses composants, car il y a risques de dommages corporels ou matériels.*

AVERTISSEMENT : *afin de réduire le risque de blessures, lire le mode d'emploi de l'outil.*

Pour toute question ou remarque au sujet de cet outil ou de tout autre outil CRAFTSMAN composez le numéro sans frais : 1-888-331-4569.

Section 3.7.2

Water Heater

Section 3.7.2.1

Tank Water Heater

Use & Care Manual
With Installation Instructions for the Installer

Electric Residential

Water Heaters

Double Element Residential Electric Models

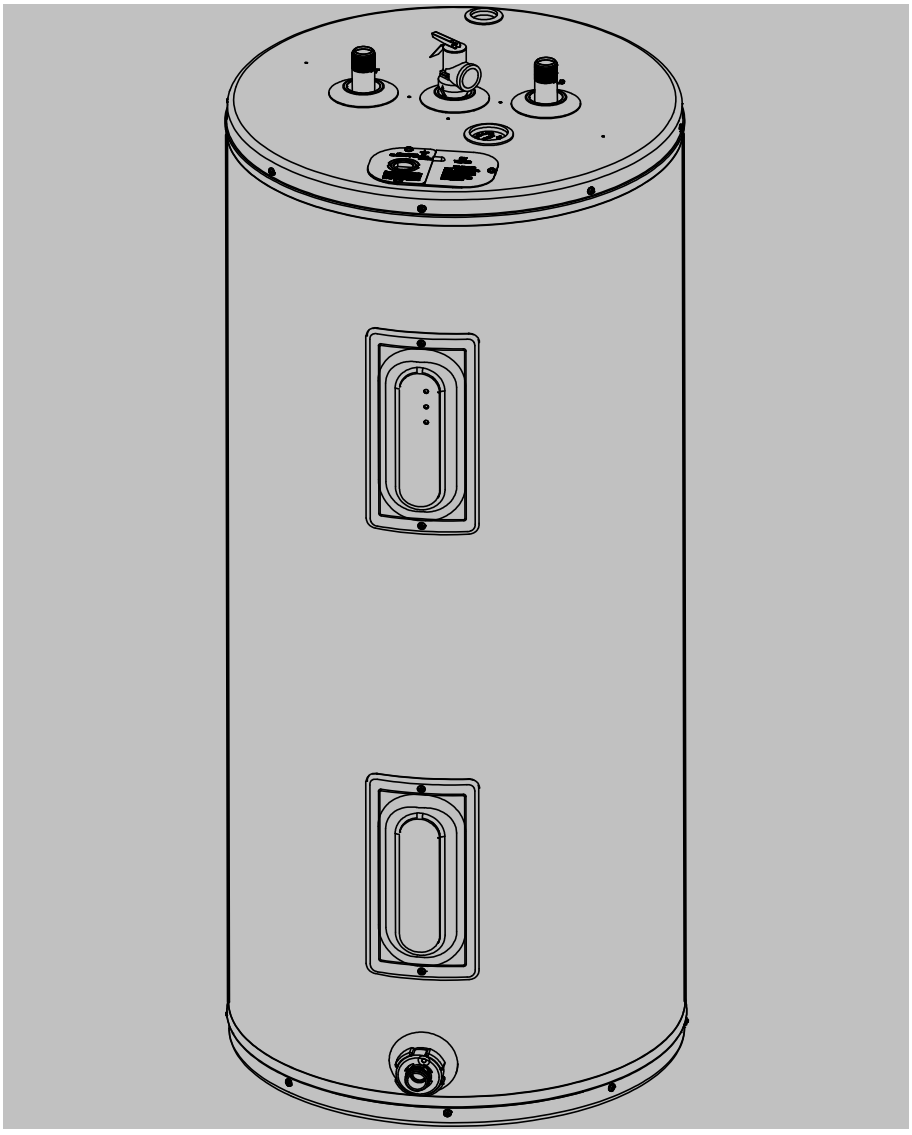

The purpose of this manual is twofold: one, to provide the installer with the basic directions and recommendations for the proper installation and adjustment of the water heater; and two, for the owner–operator, to explain the features, operation, safety precautions, maintenance and troubleshooting of the water heater. This manual also includes a parts list.

It is imperative that all persons who are expected to install, operate or adjust this water heater read the instructions carefully so they may understand how to perform these operations. If you do not understand these instructions or any terms within it, seek professional advice.

Any questions regarding the operation, maintenance, service or warranty of this water heater should be directed to the seller from whom it was purchased. If additional information is required, refer to the section on “If you need service.”

Do not destroy this manual. Please read carefully and keep in a safe place for future reference.

Recognize this symbol as an indication of Important Safety Information!

Printed in USA

AP17080 (11/13)

Safety Information

Safety Precautions 3, 4

Installation Instructions

Location 5

Water Connections 6

Electrical Connections. 8

Operating Instructions

Safety Controls 12

Water Temperature 13

Care and Cleaning

Draining 16

Extended Shut-Down 16

Maintenance. 16

Troubleshooting Tips

Before You Call
For Service. 17

Customer Service

Parts List. 18

If You Need
Service Assistance 20

Wiring Diagram. 24



FOR YOUR RECORDS

Write the model and serial numbers here:

#

#

You can find them on a label on the appliance.

Staple sales slip or cancelled cheque here.

Proof of the original purchase date is needed to obtain service under the warranty.



READ THIS MANUAL

Inside you will find many helpful hints on how to use and maintain your water heater properly. Just a little preventive care on your part can save you a great deal of time and money over the life of your water heater.

You'll find many answers to common problems in the Before You Call For Service section. If you review our chart of Troubleshooting Tips first, you may not need to call for service at all.



READ THE SAFETY INFORMATION

Your safety and the safety of others are very important. There are many important safety messages in this manual and on your appliance. Always read and obey all safety messages.



This is the safety alert symbol. Recognize this symbol as an indication of Important Safety Information! This symbol alerts you to potential hazards that can kill or hurt you and others.

All safety messages will follow the safety alert symbol and either the word "DANGER", "WARNING", "CAUTION" or "NOTICE".

These words mean:

DANGER	An imminently hazardous situation that will result in death or serious injury.
WARNING	A potentially hazardous situation that could result in death or serious injury and/or damage to property.
CAUTION	A potentially hazardous situation that may result in minor or moderate injury.
Notice:	Attention is called to observe a specified procedure or maintain a specific condition.

IMPORTANT SAFETY INFORMATION. READ ALL INSTRUCTIONS BEFORE USING.

⚠WARNING!

WATER TEMPERATURE ADJUSTMENT

Safety and energy conservation are factors to be considered when selecting the water temperature setting of water heater's thermostat. Water temperatures above 52°C (125°F) can cause severe burns or death from scalding. Be sure to read and follow the warnings outlined on the label pictured below. This label is also located on the water heater near the thermostat access panel.

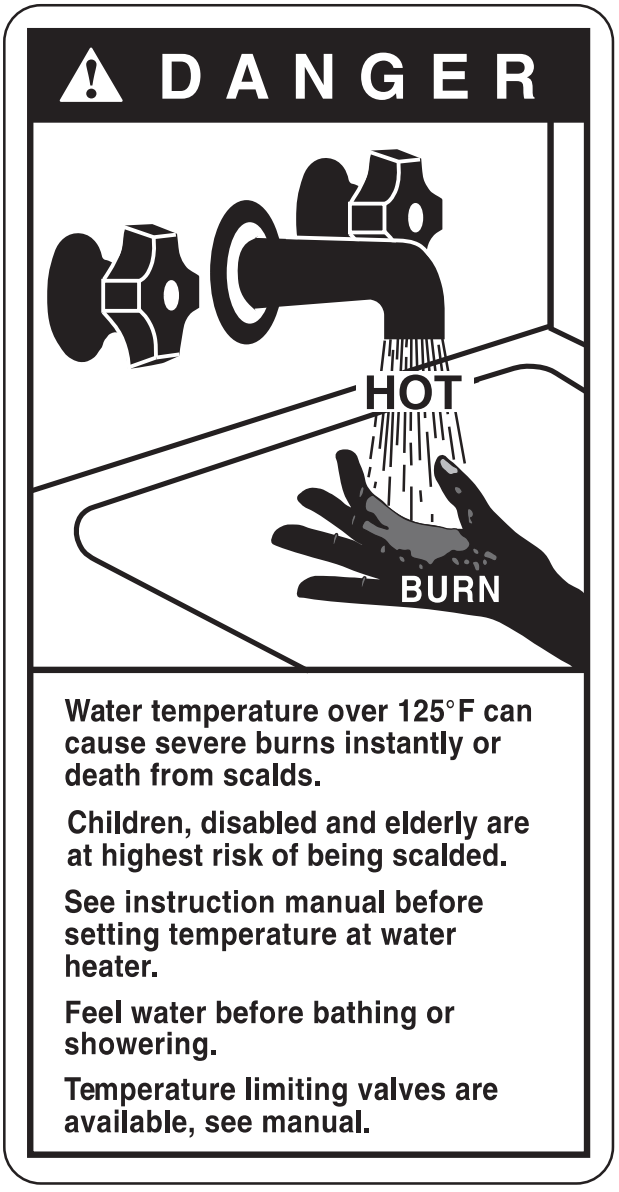

NOTICE: Mixing valves are recommended for reducing point of use water temperature by mixing hot and cold water in branch water lines. It is recommended that a mixing valve complying with the Standard for Temperature Actuated Mixing Valves for Hot Water Distribution Systems, ASSE 1017 be installed. See page 13 for more details and contact a licensed plumber or the local plumbing authority for further information.

Time/Temperature Relationship in Scalds

Temperature	Time To Produce a Serious Burn
49°C (120°F)	More than 5 minutes
52°C (125°F)	$1\frac{1}{2}$ to 2 minutes
54°C (130°F)	About 30 seconds
57°C (135°F)	About 10 seconds
60°C (140°F)	Less than 5 seconds
63°C (145°F)	Less than 3 seconds
66°C (150°F)	About $1\frac{1}{2}$ seconds
68°C (155°F)	About 1 second

Table courtesy of Shriners Burn Institute

The chart shown above may be used as a guide in determining the proper water temperature for your home.

NOTICE: Households with small children, disabled, or elderly persons may require a 49°C (120°F) or lower thermostat setting to prevent contact with "HOT" water.

The temperature of the water in the heater is regulated by the adjustable surface mounted thermostat(s) located behind the jacket access panel(s). Dual element heaters have two thermostats. The thermostat(s) were set at 60°C (140°F) before the water heater was shipped from the factory.

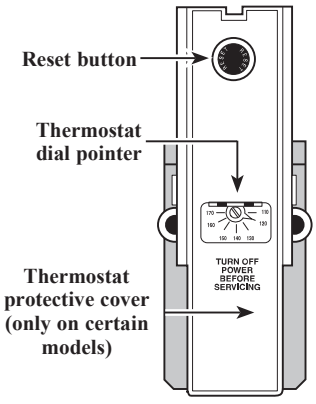

The illustration at the left shows the temperature adjustment dial used for setting the water temperature.

Refer to the Operating Instructions in this manual for detailed instructions in how to adjust the thermostat(s).

⚠DANGER: Hotter water increases the potential for Hot Water SCALDS.

IMPORTANT SAFETY INFORMATION. READ ALL INSTRUCTIONS BEFORE USING.

⚠WARNING!

For your safety, the information in this manual must be followed to minimize the risk of fire or explosion, electric shock, or to prevent property damage, personal injury, or loss of life.

Be sure to read and understand the entire Use and Care Manual before attempting to install or operate this water heater. It may save you time and cost. Pay particular attention to the Safety Instructions. Failure to follow these warnings could result in serious bodily injury or death. Should you have problems understanding the instructions in this manual, or have any questions, STOP, and get help from a qualified service technician, or the local electric utility.



SAFETY PRECAUTIONS

Have the installer show you the location of the circuit breaker and how to shut it off if necessary. Turn off the circuit breaker if the water heater has been subjected to overheating, fire, flood, physical damage or if the ECO fails to shut off.

- Read this manual entirely before installing or operating the water heater.
- Use this appliance only for its intended purpose as described in this Use and Care Manual.
- Be sure your appliance is properly installed in accordance with local codes and the provided installation instructions.
- **DO NOT** attempt to repair or replace any part of your water heater unless it is specifically recommended in this manual. All other servicing should be referred to a qualified technician.



READ AND FOLLOW THIS SAFETY INFORMATION CAREFULLY.

SAVE THESE INSTRUCTIONS

Installing the water heater.

The location chosen for the water heater must take into consideration the following:

Local Installation Regulations

This water heater must be installed in accordance with these instructions, local authorities and codes, utility codes or utility company requirements, which must be followed and take precedent over any recommendation in this manual.

Location

Locate the water heater in a clean dry area as near as practical to the area of greatest heated water demand. Long uninsulated hot water lines can waste energy and water.

Place the water heater in such a manner that the thermostat and element access panels can be removed to permit inspection and servicing such as removal of elements or checking controls.

The water heater and water lines should be protected from freezing temperatures. **DO NOT** install the water heater in outdoor, unprotected areas.

⚠CAUTION: The water heater should not be located in an area where leakage of the tank or connections will result in damage to the area adjacent to it or to lower floors of the structure. Where such areas cannot be avoided, it is recommended that a suitable catch pan, adequately drained, be installed under the water heater.

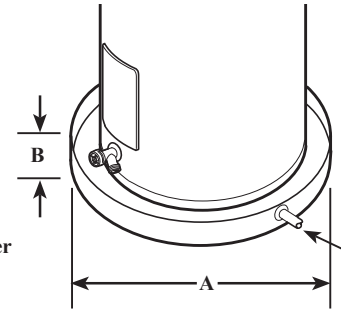

A—Diameter of water heater plus 5 cm (2″) min.

B—Maximum 5 cm (2″)

NOTICE: Auxiliary catch pan MUST conform to local codes.

Catch Pan Kits are available from the store where the water heater was purchased, or any water heater distributor.

Inspect Shipment

Inspect the water heater for possible damage. Check the markings on the rating plate of the water heater to be certain the power supply corresponds to the water heater requirements.

Installing the water heater.

Thermal Expansion

Determine if a check valve exists in the inlet water line. It may have been installed in the cold water line as a separate back flow preventer, or it may be part of a pressure reducing valve, water meter or water softener. A check valve located in the cold water inlet line can cause what is referred to as a **"closed water system"**. A cold water inlet line with no check valve or back flow prevention device is referred to as an "open" water system.

As water is heated, it expands in volume and creates an increase in the pressure within the water system. This action is referred to as **"thermal expansion"**. In an "open" water system, expanding water which exceeds the capacity of the water heater flows back into the city main where the pressure is easily dissipated.

A **"closed water system"**, however, prevents the expanding water from flowing back into the main supply line, and the result of **"thermal expansion"** can create a rapid and dangerous pressure increase in the water heater and system piping. This rapid pressure increase can quickly reach the safety setting of the relief valve, causing it to operate during each heating cycle. Thermal expansion, and the resulting rapid and repeated expansion and contraction of components in the water heater and piping system can cause premature failure of the relief valve, and possibly the heater itself. Replacing the relief valve **will not** correct the problem!

The suggested method of controlling thermal expansion is to install an expansion tank in the cold water line between the water heater and the check valve (refer to the illustration below). The expansion tank is designed with an air cushion built in that compresses as the system pressure increases, thereby relieving the over pressure condition and eliminating the repeated operation of the relief valve. Other methods of controlling thermal expansion are also available. Contact your installing contractor, water supplier or plumbing inspector for additional information regarding this subject.

Water Supply Connections

NOTICE: DO NOT apply heat to the HOT or COLD water connections. If sweat connections are used, sweat tubing to adapter before fitting adapter to the water connections on heater. Any heat applied to the water supply fittings will permanently damage the dip tube and or heat traps.

Refer to the illustration below for suggested typical installation. The installation of unions or flexible copper connectors is recommended on the hot and cold water connections so that the water heater may be easily disconnected for servicing if necessary. The HOT and COLD water connections are clearly marked and are 3/4″ NPT on all models. Install a shut-off valve in the cold water line near the water heater.

Typical Installation

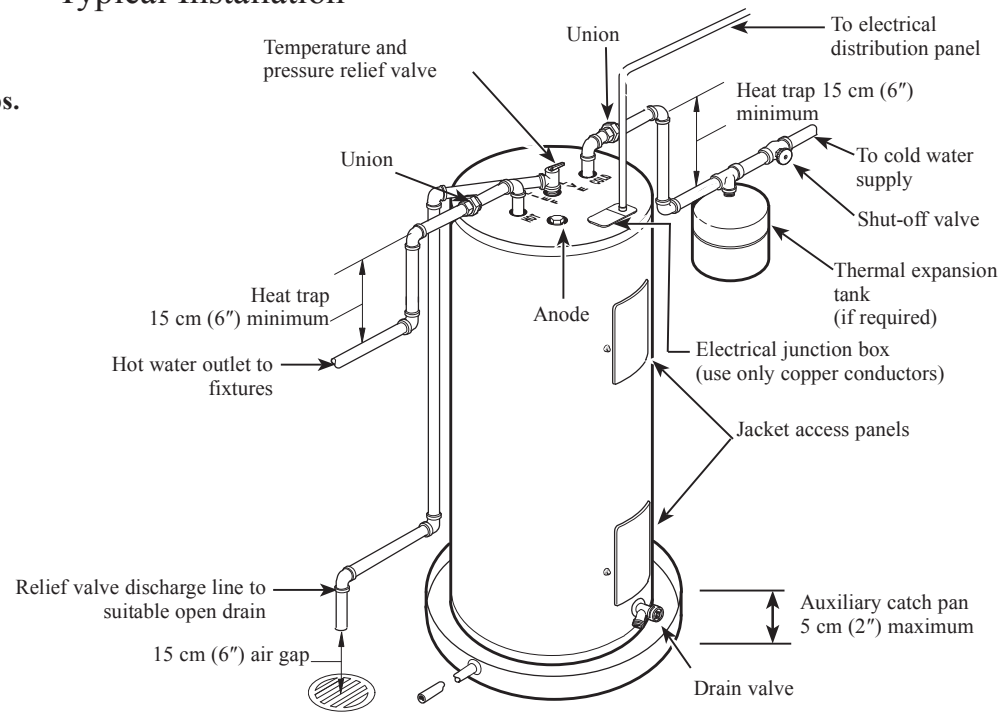

*** Some models are constructed with a side cold water inlet and will not have an opening on the top of the water heater.**

A new combination temperature and pressure relief valve, complying with the Standard for Relief Valves and Automatic Gas Shut-Off Devices for Hot Water Supply Systems, ANSI Z21.22/CSA 4.4 M99, must be installed in the opening provided and marked for the purpose on the water heater. No valve of any type should be installed between the relief valve and the tank. Local codes shall govern the installation of relief valves.

Relief Valve

⚠WARNING: The pressure rating of the relief valve must not exceed 1 034 kPa (150 PSI), the maximum working pressure of the water heater as marked on the rating plate.

The BTU/h rating of the relief valve must not be less than the input rating of the water heater as indicated on the rating label located on the front of the heater (1 watt=3.412 BTU/h).

Connect the outlet of the relief valve to a suitable open drain so that the discharge water cannot contact live electrical parts or persons and to eliminate potential water damage.

Piping used should be of a type approved for hot water distribution. The discharge line must be no smaller than the outlet of the valve and must pitch downward from the valve to allow complete drainage (by gravity) of the relief valve and discharge line. The end of the discharge line should not be threaded or concealed and should be protected from freezing. No valve of any type, restriction or reducer coupling should be installed in the discharge line.

To Fill the Water Heater

⚠WARNING: The tank must be full of water before heater is turned on. The water heater warranty DOES NOT cover damage or failure resulting from operation with an empty or partially empty tank.

Make certain the drain valve is completely closed.

Open the shut-off valve in the cold water supply line.

Open each hot water faucet slowly to allow the air to vent from the water heater and piping.

A steady flow of water from the hot water faucet(s) indicates a full water heater.

Condensation

Condensation can form on the tank when it is first filled with water. Condensation might also occur with a heavy water draw and very cold inlet water temperature.

This condition is not unusual, and will disappear after the water becomes heated. If, however, the condensation continues, examine the piping and fittings for possible leaks.

Installing the water heater.

⚠CAUTION: The presence of water in the piping and water heater does not provide sufficient conduction for a ground. Non-metallic piping, dielectric unions, flexible connectors etc. can cause the water heater to be electrically isolated.

Electrical Connections

A separate branch circuit with copper conductors, overcurrent protective device and suitable disconnecting means must be provided by a qualified electrician.

All wiring must conform to local codes, or the latest edition of the Canadian Electrical Code. Refer to wiring diagrams in the back of this manual for wiring connections.

The voltage requirements and wattage load for the water heater are specified on the rating plate on the front of the water heater.

The water heater is completely wired to the junction bracket inside the top access panel on front of the water heater. An opening for 1.2 cm (1/2”) or 1.9 cm (3/4”) electrical fitting is provided for field wiring connections.

The branch circuit wiring should include either:

1. Metallic conduit or metallic sheathed cable approved for use as a grounding conductor and installed with fittings approved for the purpose.
2. Non-metallic sheathed cable, metallic conduit or metallic sheathed cable not approved for use as a ground conductor shall include a separate conductor for grounding. It should be attached to the ground terminals of the water heater and the electrical distribution box.

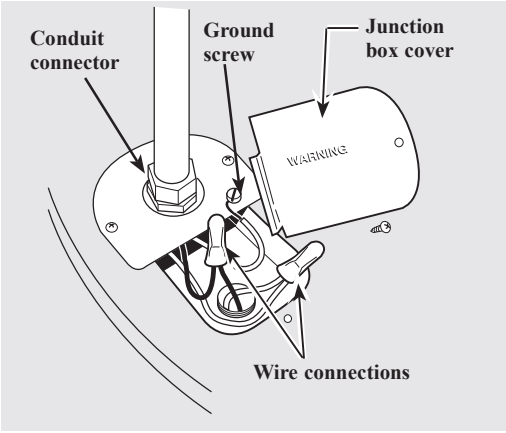

Water heater junction box

NOTICE: This guide recommends minimum branch circuit sizing and wire size. Refer to wiring diagrams in this manual for field wiring connections.

Branch Circuit Sizing and Wire Size Guide

Total Water Heater Wattage	Recommended Over Current Protection (fuse or circuit breaker amperage rating)				Copper Wire Size AWG Based on N.E.C. Table 310-16 (75°C)			
	208V	240V	277V	480V	208V	240V	277V	480V
3,000	20	20	---	---	12	12	---	---
3,800	25	20	---	---	10	12	---	---
4,000	25	25	---	---	10	10	---	---
4,500	30	25	---	---	10	10	---	---

Insulation Blankets

⚠WARNING: If local codes require external application of insulation blanket kits the manufacturer's instructions included with the kit must be carefully followed.

Insulation blankets, available to the general public, for external use on electric water heaters are not necessary. The purpose of an insulation blanket is to reduce the standby heat loss encountered with storage tank heaters. This water heater meets or exceeds CSA standards, with respect to insulation and standby loss requirements making an insulation blanket unnecessary.

The manufacturer's warranty does not cover any damage or defect caused by installation, attachment or use of any type of energy saving or other unapproved devices (other than those authorized by the manufacturer) into, onto or in conjunction with the water heater. The use of unauthorized energy saving devices may shorten the life of the water heater and may endanger life and property.

The manufacturer disclaims any responsibility for such loss or injury resulting from the use of such unauthorized devices.

⚠CAUTION: If local codes require the application of an external insulation blanket to this water heater, pay careful attention to the following so as not to restrict the proper function and operation of the water heater:

- **DO NOT** cover the operating or warning labels attached to the water heater or attempt to relocate them on the exterior of insulation blanket.
- **DO NOT** apply insulation to the top of the water heater this could interfere with the safe operation of the electrical junction box.
- **DO NOT** cover the jacket access panel(s) to the thermostat(s) and heating element(s), or pressure and temperature relief valve.
- Inspect the insulation blanket frequently.

Hot and Cold Pipe Insulation Installation

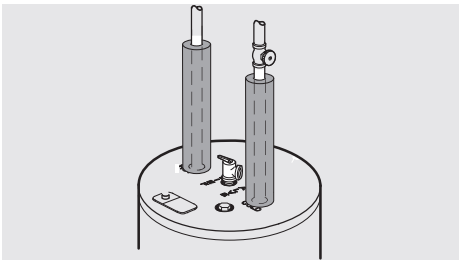

Typical vertical piping arrangement

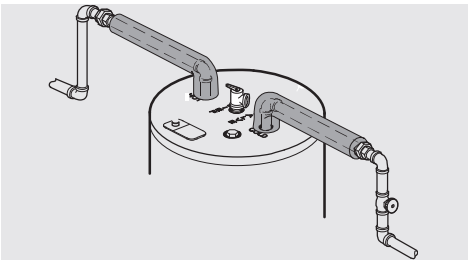

Typical horizontal piping arrangement

For increased energy efficiency, some water heaters have been supplied with two 61cm (24") sections of pipe insulation.

Please install the insulation, according to the illustrations above, that best meets your requirements.

Installing the water heater.

Relief Valve Insulation Installation

⚠CAUTION: Ensure the T&P Valve opening is not obstructed by the insulation.

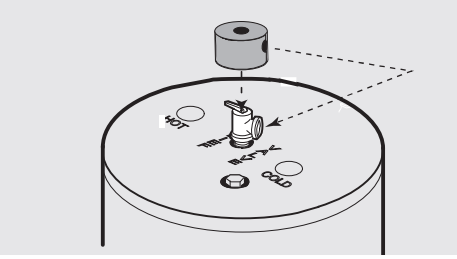

Typical top connection arrangement

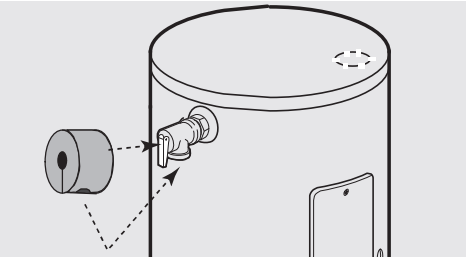

Typical side connection arrangement

For increased energy efficiency, some water heaters have been supplied with a 6cm (2-3/8”) section of pipe insulation.

Please install the insulation, according to the illustrations above, that best meets your requirements.

Slip the insulation cover over the T&P Valve through the center hole and align the hole in the side with the opening of the T&P Valve.

Heat Trap

For increased energy efficiency, some water heaters have been supplied with factory installed internal or external heat traps in the hot outlet line and cold water inlet openings.

NOTICE: DO NOT apply heat to the HOT or COLD water connections. If sweat connections are used, sweat tubing to adapter before fitting adapter to the water connections on heater. Any heat applied to the water supply fittings will permanently damage the dip tube and/or heat traps.

Installation Checklist

A. Water Heater Location

- ❑ Close to area of heated water demand.
- ❑ Indoors and protected from freezing temperatures.
- ❑ Area free of flammable vapours.
- ❑ Provisions made to protect area from water damage.
- ❑ Sufficient room to service heater.

B. Water Supply

- ❑ Water heater completely filled with water.
- ❑ Air purged from water heater and piping.
- ❑ Water connections tight and free of leaks.

C. Relief Valve

- ❑ Temperature and Pressure Relief Valve properly installed and discharge line run to open drain.
- ❑ Discharge line protected from freezing.

D. Wiring

- ❑ Power Supply voltage agrees with water heater rating plate.
- ❑ Branch circuit wire and fusing or circuit breaker of proper size.
- ❑ Electrical connections tight and unit properly grounded.

Operating the water heater.

⚠CAUTION: Hydrogen gas can be produced in a hot water system served by this water heater that has not been used for a long period of time (generally two weeks or more). HYDROGEN GAS IS EXTREMELY FLAMMABLE!! To dissipate such gas and to reduce risk of injury, it is recommended that the hot water faucet be opened for several minutes at the kitchen sink before using any electrical appliance connected to the hot water system. If hydrogen is present, there will be an unusual sound such as air escaping through the pipe as the water begins to flow. DO NOT smoke or use an open flame near the faucet at the time it is open.

Safety Precautions

- **A** **Do** turn off power to water heater if it has been subjected to over heating, fire, flood, physical damage.
- **B** **DO NOT** turn on water heater unless it is filled with water.
- **C** **DO NOT** turn on water heater if cold water supply shut-off valve is closed.
- **D** If there is any difficulty in understanding or following the Operating Instructions or the Care and Cleaning section, it is recommended that a qualified person or serviceman perform the work.

Safety Controls

⚠WARNING: If the water heater has been subjected to flood, fire, or physical damage, turn off power and water to the water heater.

DO NOT operate the water heater again until it has been thoroughly checked by qualified service personnel.

The water heater is equipped with a combination thermostat and temperature limiting control (ECO) that is located above the heating element in contact with the tank surface. If for any reason the water temperature becomes excessively high, the temperature limiting control (ECO) breaks the power circuit to the heating element. Once the control opens, it must be reset manually.

⚠CAUTION: The cause of the high temperature condition must be investigated by qualified service technician and corrective action must be taken before placing the water heater in service again.

To reset the temperature limiting control:

1. Turn off the power to the water heater.
2. Remove the jacket access panel(s) and insulation.

   The thermostat protective cover should not be removed. (Only on certain models).
3. Press the red RESET button.
4. Replace the insulation and jacket access panel(s) before turning on the power to the water heater.

Water Temperature Setting

⚠DANGER: There is a hot water scald potential if the thermostat is set too high. Households with small children, disabled, or elderly persons may require a 49°C (120°F) or lower thermostat setting to prevent contact with HOT water.

The temperature of the water in the water heater can be regulated by setting the temperature dial of the adjustable surface mounted thermostat(s) located behind the jacket access panel(s).

Dual element heaters have two thermostats.

Safety and energy conservation are factors to be considered when selecting the water temperature setting of the water heater's thermostat(s). The lower the temperature setting, the greater the savings in energy and operating costs.

The thermostat(s) are factory set at 60°C (140°F) or less where local codes require. This is the recommended starting point.

Water temperatures above 52°C (125°F) can cause severe burns or death from scalding. Be sure to read and follow the warnings outlined in this manual and on the label on the water heater. This label is located on the water heater near the thermostat access panel.

Mixing valves are recommended for reducing point of use water temperature by mixing hot and cold water in branch water lines. It is recommended that a mixing valve complying with the Standard for Temperature Actuated Mixing Valves for Hot Water Distribution Systems, ASSE 1017 be installed. See page 3 for more details and contact a licensed plumber or the local plumbing authority for further information.

The chart below may be used as a guide in determining the proper water temperature for your home.

Time/Temperature Relationship in Scalds

Temperature	Time To Produce a Serious Burn
49°C (120°F)	More than 5 minutes
52°C (125°F)	$1\frac{1}{2}$ to 2 minutes
54°C (130°F)	About 30 seconds
57°C (135°F)	About 10 seconds
60°C (140°F)	Less than 5 seconds
63°C (145°F)	Less than 3 seconds
66°C (150°F)	About $1\frac{1}{2}$ seconds
68°C (155°F)	About 1 second

Table courtesy of Shriners Burn Institute

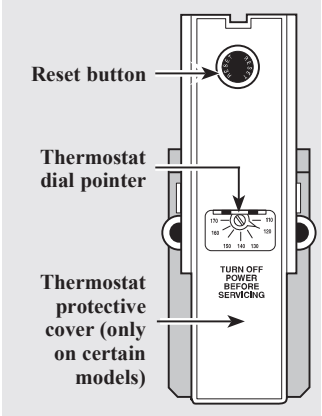

Thermostat and protective cover.

If adjustment is necessary…

1. Turn off the power to the water heater.
2. Remove the jacket access panel(s) and insulation exposing the thermostat(s).

   The thermostat protective cover(s) should not be removed (Only on certain models).
3. Using a small screwdriver, set the thermostat(s) dial pointer(s) to the desired temperature.
4. Replace the insulation and jacket access panel(s). Turn on the power to the water heater.

Status Lights and Diagnostics (if installed)

This water heater may be equipped with status lights located on the top cavity cover. The purpose of these lights is to indicate the power and element status of the water heater.

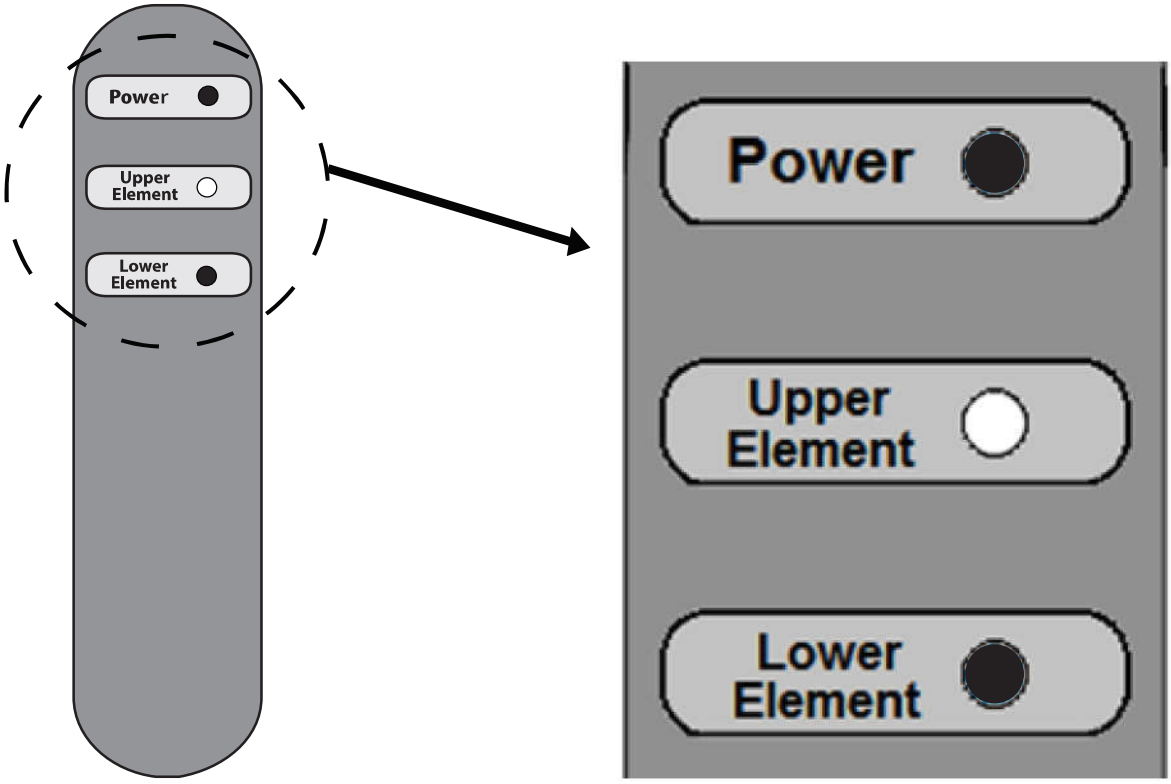

Possible light combinations and methods to determine proper function of water heater are shown below.



1) Power is on and no element is heating the water. Full of hot water.



1) Power is on and the bottom element is heating the water.

1) Power is on and the top element is heating the water.



2) Reduced amount of hot water with this status means the bottom element has failed. Call service.
3) Cold water with this condition means the top element has failed. Call service.



1) Power is off. Check power source or connections.
2) Emergency Cut Off has been activated. Turn off power supply and have a qualified person reset the ECO.
3) Call service.

Status Light Wiring Diagram (if installed)

When factory installed with the System Sentinel feature, the wiring will feature four additional wires to connect to the top cavity cover light system. The four added wires are shown below attached to the harness connector.

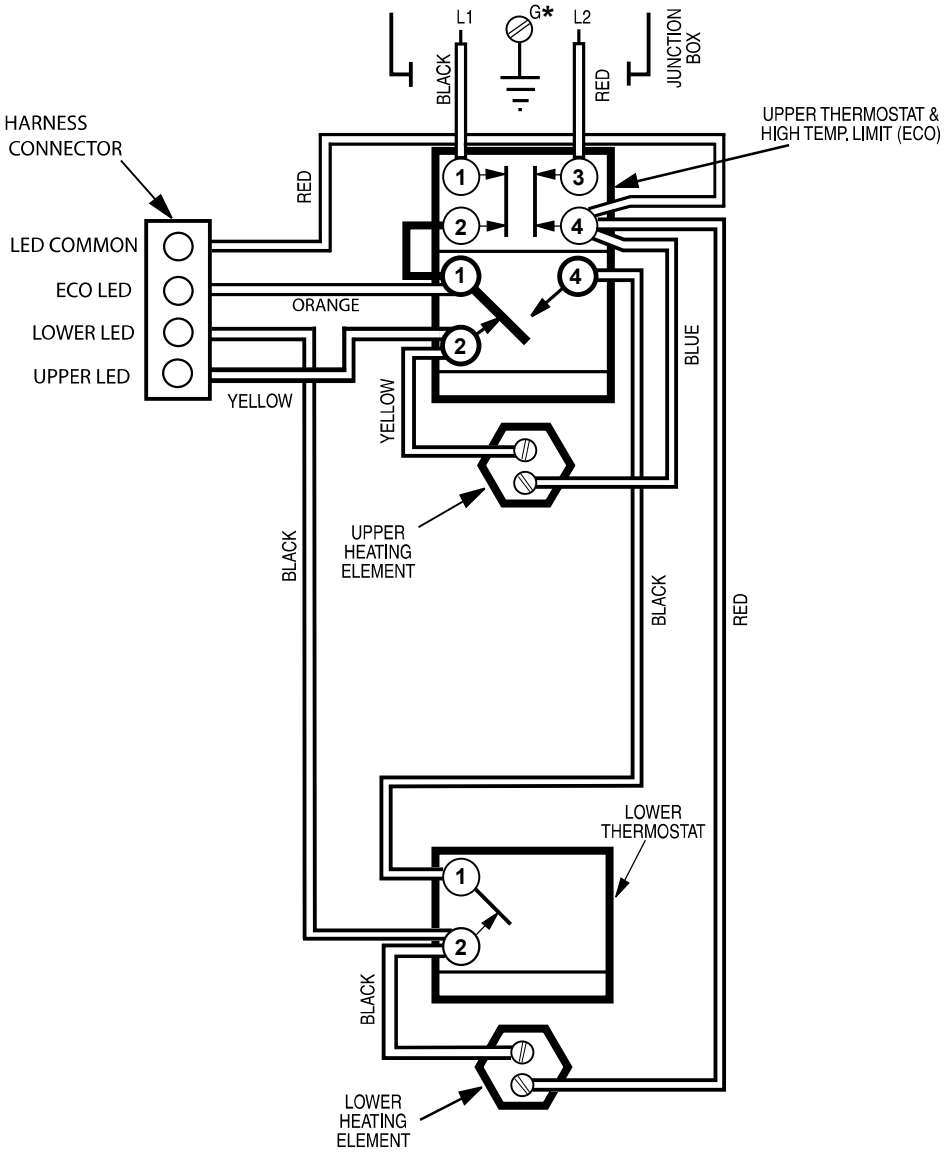

Care and cleaning of the water heater.

Draining the Water Heater

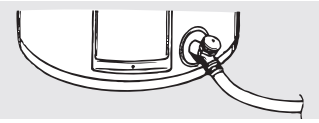

⚠CAUTION: Shut off power to the water heater before draining water.

⚠DANGER: Before manually operating the relief valve, make certain no one will be exposed to the hot water released by the valve. The water drained from the tank may be hot enough to present a scald hazard and should be directed to a suitable drain to prevent injury or damage.

In order to drain the water heater, turn off the cold water supply. Open a hot water faucet or lift the handle on the relief valve to admit air to the tank.

Attach a garden hose to the drain valve on the water heater and direct the stream of water to a drain. Open the valve.

Vacation and Extended Shut-Down

NOTICE: Refer to the Hydrogen Gas Caution in the Operating Instructions.

If the water heater is to remain idle for an extended period of time, the power and water to the appliance should be turned off to conserve energy and prevent a build-up of dangerous hydrogen gas.

The water heater and piping should be drained if they might be subjected to freezing temperatures.

After a long shut-down period, the water heater's operation and controls should be checked by qualified service personnel. Make certain the water heater is completely filled again before placing it in operation.

Routine Preventative Maintenance

⚠DANGER: Before manually operating the relief valve, make certain no one will be exposed to the danger of coming in contact with the hot water released by the valve. The water may be hot enough to create a scald hazard. The water should be released into a suitable drain to prevent injury or property damage.

NOTICE: If the temperature and pressure relief valve on the hot water heater discharges periodically, this may be due to thermal expansion in a closed water system. Contact the water supplier or your plumbing contractor on how to correct this. DO NOT plug the relief valve outlet.

Properly maintained, your water heater will provide years of dependable trouble-free service.

It is suggested that a routine preventive maintenance program be established and followed by the user.

It is further recommended that a periodic inspection of the operating controls, heating element and wiring should be made by service personnel qualified in electric appliance repair.

Most electrical appliances, even when new, make some sound when in operation. If the hissing or singing sound level increases excessively, the electric heating element may require cleaning. Contact a qualified installer or plumbing contract to inspect.

At least once a year, lift and release the lever handle on the temperature pressure relief valve, located near the top of the water heater, to make certain the valve operates freely. Allow several litres to flush through the discharge line to an open drain.

A water heater's tank can act as a settling basin for solids suspended in the water. It is therefore not uncommon for hard water deposits to accumulate in the bottom of the tank. It is suggested that a few litres of water be drained from the water heater's tank every month to clean the tank of these deposits.

Rapid closing of faucets or solenoid valves in automatic water using appliances can cause a banging noise heard in a water pipe. Strategically located risers in the water pipe system or water hammer arresting devices can be used to minimize the problem.

The anode rod should be removed from the water heater's tank annually for inspection and replaced when more than 15 cm (6") of core wire is exposed at either end of the rod.

Make sure the cold water supply is turned off before removing anode rod.

NOTICE: DO NOT remove the anode rod from the water heater's tank, except for inspection and/or replacement, as operation with the anode rod removed will greatly shorten the life of the glass lined tank and will exclude warranty coverage.

Before You Call For Service…



Troubleshooting Tips
Save time and money! Review the chart on this page first and you may not need to call for service.

Problem	Possible Causes	What To Do
Rumbling noise	Water conditions in your home caused a build up of scale or mineral deposits on the heating elements.	● Remove and clean the heating elements.
Relief valve producing popping noise or draining	Pressure build up caused by thermal expansion in a closed system.	● This is an unacceptable condition and must be corrected. Contact the water supplier or plumbing contractor on how to correct this. Do not plug the relief valve outlet.
Rattling noise during periods of water usage	Internal heat trap fittings in operation.	● This is normal for heat trap fittings when in operation and does not indicate a need for service.
Not enough or no hot water	Water usage may have exceeded the capacity of the water heater.	● Wait for the water heater to recover after an abnormal demand.
	A fuse is blown or a circuit breaker tripped.	● Replace fuse or reset circuit breaker.
	Electric supply may be off.	● Make sure electric supply to water heater and disconnect switch, if used, are in the ON position.
	The thermostat may be set too low.	● See the Temperature regulation of the water heater section of this manual.
	Leaking or open hot water faucets.	● Make sure all faucets are closed.
	Electric service to your home may be interrupted.	● Contact the local electric utility.
	Improper wiring.	● See the Installing the water heater section of this manual.
	Manual reset limit (ECO).	● See the Temperature regulation of the water heater section of this manual.
	Cold water inlet temperature may be colder during the winter months.	● This is normal. The colder inlet water takes longer to heat.
Water is too hot	The thermostat is set too high.	● See the Temperature regulation of the water heater section of this manual.

⚠**CAUTION: For your safety DO NOT attempt repair of electrical wiring, thermostats, heating elements or other safety devices. Refer repairs to qualified service personnel.**

Replacement Parts.

Instructions For Placing a Parts Order

Address parts orders to the distributor or store where the heater was purchased.

All parts orders should include:

1. The model and serial number of the water heater from the rating plate.
2. Specify voltage and wattage as marked on the rating plate.
3. Part description (as noted below) and number of parts desired.

⚠CAUTION: For your safety DO NOT attempt repair of electrical wiring, thermostat(s), heating elements or other operating controls. Refer repairs to qualified service personnel.

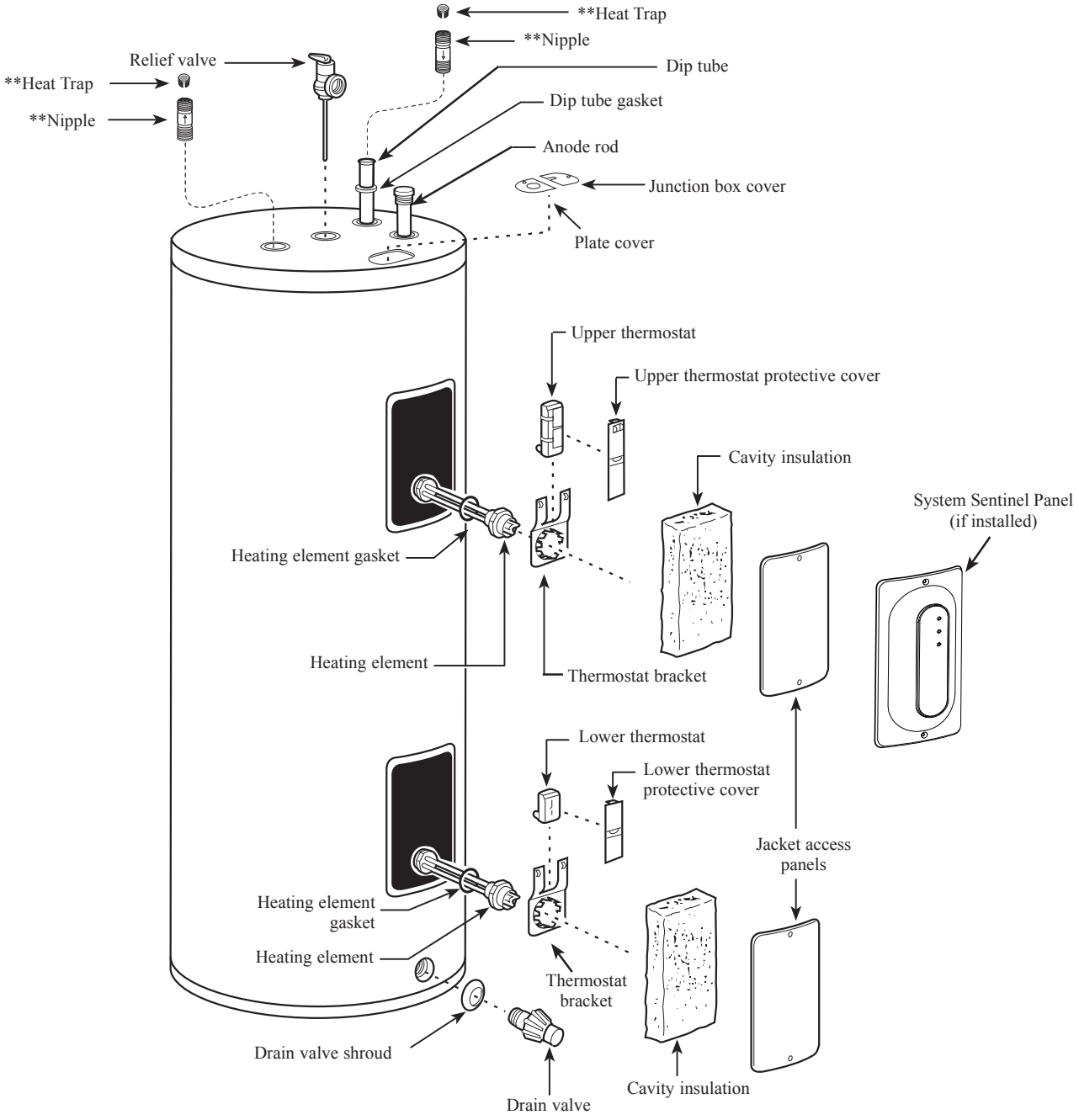

NOTICE: Some parts may vary in appearance from model to model.

**Not supplied on all models

Cavity Insert Instructions (for certain models)

The following instructions are intended for qualified service personnel ONLY, and should only be done when necessary.

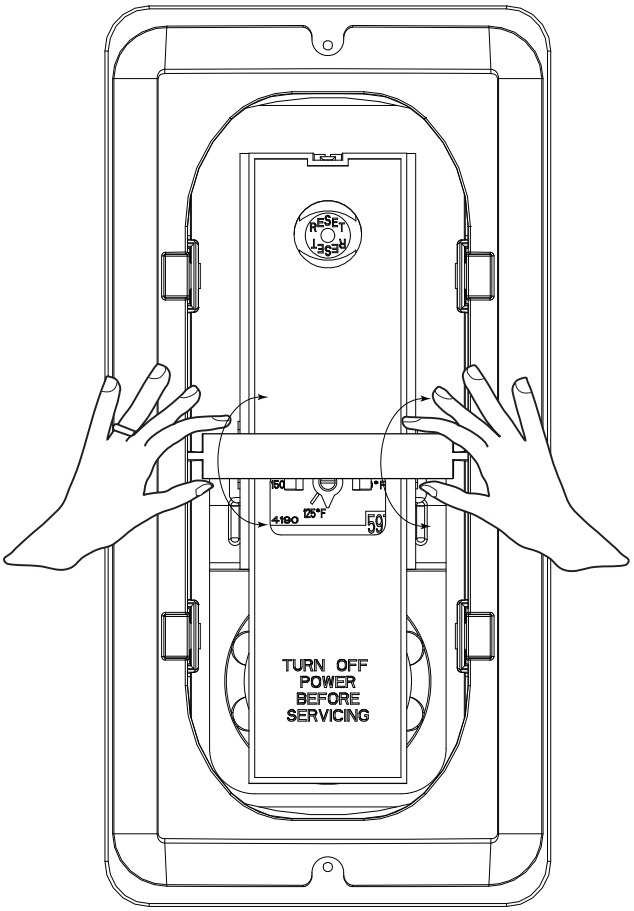

In order to replace the thermostat or heating element, remove the cavity insert crossbar by following the instructions below:

1. Turn off the power to the water heater.
2. Remove the jacket access panel(s) and insulation.
3. Rotate the crossbar up and down until it breaks away from the remainder of the cavity insert. (See illustration to the left)

   Discard the crossbar. It cannot and need not be replaced.
4. Replace the thermostat and/or element as necessary.
5. Replace the insulation and jacket access panel(s) before turning on the power to the water heater.

NOTICE: The cavity insert crossbar is necessary for the manufacturing process only. The removal of the crossbar will not interfere with the operation of the water heater.

IF YOU NEED SERVICE



1. Should you have any questions about your new water heater, or if it requires adjustment, repair, or routine maintenance, it is suggested that you first contact your installer, plumbing contractor or previously agreed upon service agency. In the event the firm has moved, or is unavailable, refer to the telephone directory, commercial listings or local utility for qualified service assistance.

2. Should your problem not be solved to your complete satisfaction, you should then contact the Manufacturer's National Service Department at the following address:

   Rheem Canada Ltd./Ltée.
   125 Edgeware Road, Unit 1
   Brampton, ON L6Y OP5
   Customer Service: 1-800-268-6966 - please request a Customer Service Representative (CSR)
   Warranty: 1-800-263-8342

   When contacting the manufacturer, the following information will be requested:

a. Model and serial number of the water heater as shown on the rating plate attached to the jacket of the heater.
b. Address where the water heater is located and physical location.
c. Name and address of installer and any service agency who performed service on the water heater.
d. Date of original installation and dates any service work was performed.
e. Details of the problems as you can best describe them.
f. List of people, with dates, who have been contacted regarding your problem.

Notes

Notes

Notes

Wiring diagram

Wiring Diagram for Type–59T Therm-o-disc Thermostats

Double Element Models

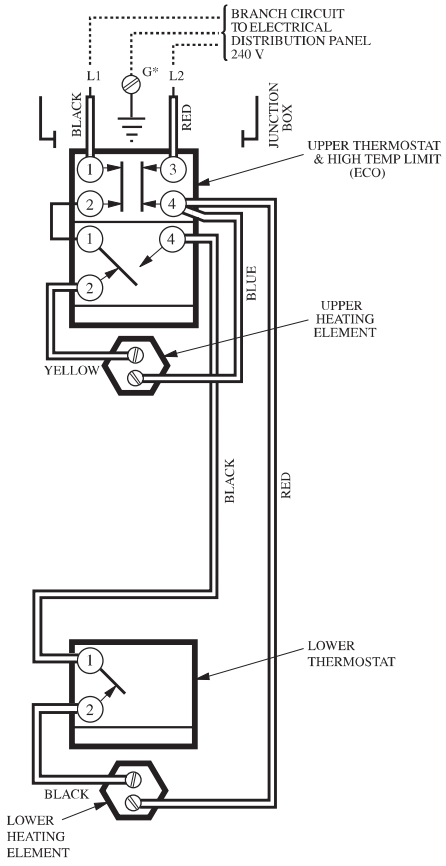

Section 3.7.2.2

Tankless Water Heater

PERFORMANCE™

The new degree of comfort.™

PERFORMANCE™ tankless electric water heaters offer continuous hot water quick and on demand for single point-of-use or multiple applications

Performance Features

- On demand, consistent and endless hot water
- Compact and stylish with digital temperature control in increments of 1°F ranging from 80°F to 140°F*
- 99.8% Energy efficient
- Robust copper immersion heating elements with brass top increases durability and are threaded for easy replacement
- Simple Installation
- Digital temperature display
- External controls to adjust temperature in increments of 1°F*

Applications

- Whole-Home – up to 6 GPM
- Water-Saver Shower Head – 1.5 GPM
- Standard Shower Head – 2.0 GPM
- Standard Hand Sink – 0.5 GPM
- Kitchen Sink – 1 to 2 GPM
- Bath Tub – ≥ 4 GPM
- Dishwasher – 1 to 2 GPM
- Washing Machine – 1 to 1.5 GPM

Average Gallons Per Minute (GPM) based on 2010 Plumbing Standards

Warranty

- 5-Year heating chamber and 1-year parts limited warranty

See written warranty for complete details



RETEX-04
RETEX-06



RETEX-08
RETEX-11
RETEX-13



RETEX-18



RETEX-24
RETEX-27



RETEX-36

*RETEX-04 and RETEX-06 only show output temperature and are non-thermostatically controlled

MODEL NUMBER	TEMPERATURE RISE °F								
	0.5 GPM	1.0 GPM	1.5 GPM	2.0 GPM	2.5 GPM	3.0 GPM	4.0 GPM	5.0 GPM	6.0 GPM
RETEX-04	48°	–	–	–	–	–	–	–	–
RETEX-06	75°	37°	–	–	–	–	–	–	–
RETEX-08	–	55°	36°	27°	22°	18°	–	–	–
RETEX-08 (derated 208V performance)	79°	40°	27°	20°	–	–	–	–	–
RETEX-11	–	75°	50°	38°	30°	25°	–	–	–
RETEX-11 (derated 208V performance)	–	56°	37°	28°	–	–	–	–	–
RETEX-13	–	89°	59°	44°	36°	30°	22°	–	–
RETEX-13 (derated 208V performance)	–	69°	46°	34°	–	–	–	–	–
RETEX-18	–	+	82°	62°	49°	41°	31°	25°	–
RETEX-18 (derated 208V performance)	–	90°	60°	45°	36°	30°	–	–	–
RETEX-24	–	+	+	82°	66°	55°	41°	33°	27°
RETEX-24 (derated 208V performance)	–	+	+	60°	48°	40°	30°	24°	20°
RETEX-27	–	+	+	92°	74°	62°	46°	37°	31°
RETEX-27 (derated 208V performance)	–	+	+	68°	55°	45°	34°	27°	23°
RETEX-36	–	+	+	+	98°	82°	62°	49°	41°
RETEX-36 (derated 208V performance)	–	+	+	91	73°	61°	45°	36°	30°

+ Temperature electronically limited setting on adjustable thermostat on front cover

Intertek

Tested and certified by the Water Quality Association against NSF/ANSI 372 for lead free compliance.

See specifications chart on next page.

The new degree of comfort.™

PERFORMANCE™ **tankless electric water heaters**



RETEX-04, RETEX-06

Unique Features:
- External Digital Display – shows outlet temperature
- Durable Copper Immersion single heating element, field serviceable
- Simple Installation – 3 Foot electric cable included; Bottom 1/2" NPT water connections



RETEX-08, RETEX-11 RETEX-13

Unique Features:
- External Adjustable Digital Thermostatic Control with LED display (+/- 1 degree accuracy)
- Durable Copper Immersion two heating elements, field serviceable
- Simple Installation – 3 Foot electric cable included; Side 1/2" compression water connections



RETEX-18

Unique Features:
- External Digital Thermostatic Control with LED display (+/- 1 degree accuracy)
- Most advanced self-modulation, adjust power to meet hot water demand
- Durable Copper Immersion two heating elements, field serviceable
- Simple Installation – Bottom 3/4" NPT water connections



RETEX-24, RETEX-27

Unique Features:
- External Digital Thermostatic Control with LED display (+/- 1 degree accuracy)
- Most advanced self-modulation, adjust power to meet hot water demand
- Durable Copper Immersion three heating elements, field serviceable
- Simple Installation – Bottom 3/4" NPT water connections



RETEX-36

Unique Features:
- External Digital Thermostatic Control with LED display (+/- 1 degree accuracy)
- Most advanced self-modulation, adjust power to meet hot water demand
- Durable Copper Immersion four heating elements, field serviceable
- Simple Installation – Bottom 3/4" NPT water connections

PERFORMANCE™ Tankless Electric Specifications

DESCRIPTION	FEATURES							ROUGHING IN DIMENSIONS (SHOWN IN INCHES)				
MODEL NUMBER	kW	AMPS	RECOMMENDED BREAKER SIZE	VOLTAGE	RECOMMENDED WIRE SIZE (CU)	MIN. FLOW (GPM)	MAX. FLOW (GPM)	HEIGHT	WIDTH	DEPTH	WATER CONN.	SHIP WEIGHT (LBS.)
120V 1 HEATING CHAMBER												
RETEX-04	3.5	29A	(1x30)A	120	10 AWG	0.3	4.8	5-7/8	10-7/8	2-3/4	1/2 NPT	4.5
240V* 1 HEATING CHAMBER												
RETEX-06	5.5	29A	(1x30)A	220	10 AWG	0.3	4.8	5-7/8	10-7/8	2-3/4	1/2 NPT	4.5
RETEX-08	8.0	33A	(1x40)A	240	8 AWG	0.3	4.8	12-5/8	8-1/4	3-5/8	1/2 CF	7
RETEX-08 (derated 208V performance)*	5.8	28A	(1x40)A	208	8 AWG	0.3	4.8	12-5/8	8-1/4	3-5/8	1/2 CF	7
RETEX-11	11.0	46A	(1x50)A	240	6 AWG	0.3	4.8	12-5/8	8-1/4	3-5/8	1/2 CF	8.5
RETEX-11 (derated 208V performance)*	8.2	29A	(1x50)A	208	6 AWG	0.3	4.8	12-5/8	8-1/4	3-5/8	1/2 CF	8.5
RETEX-13	13.0	54A	(1x60)A	240	6 AWG	0.3	4.8	12-5/8	8-1/4	3-5/8	1/2 CF	8.5
RETEX-13 (derated 208V performance)*	10.1	49A	(1x60)A	208	6 AWG	0.3	4.8	12-5/8	8-1/4	3-5/8	1/2 CF	8.5
240V* 2 HEATING CHAMBERS												
RETEX-18	18.0	75A	(2x40)A	240	8 AWG	0.3	7.0	18-1/4	14-1/2	3-1/2	3/4 NPT	14.78
RETEX-18 (derated 208V performance)*	13.3	64A	(2x40)A	208	8 AWG	0.3	7.0	18-1/4	14-1/2	3-1/2	3/4 NPT	14.78
240V* 3 HEATING CHAMBERS												
RETEX-24	24.0	100A	(3x40)A	240	8 AWG	0.3	7.0	18-1/4	17-5/8	3-1/2	3/4 NPT	17.8
RETEX-24 (derated 208V performance)*	17.5	84A	(3x40)A	208	8 AWG	0.3	7.0	18-1/4	17-5/8	3-1/2	3/4 NPT	17.8
RETEX-27	27.0	112A	(3x40)A	240	8 AWG	0.3	7.0	18-1/4	17-5/8	3-1/2	3/4 NPT	17.8
RETEX-27 (derated 208V performance)*	20.0	96A	(3x40)A	208	8 AWG	0.3	7.0	18-1/4	17-5/8	3-1/2	3/4 NPT	17.8
240V* 4 HEATING CHAMBERS												
RETEX-36	36.0	150A	(4x40)A	240	8 AWG	0.3	8.0	18-1/4	21-5/8	3-1/2	3/4 NPT	22.7
RETEX-36 (derated 208V performance)*	26.6	127A	(4x40)A	208	8 AWG	0.3	8.0	18-1/4	21-5/8	3-1/2	3/4 NPT	22.7

* 240V units can be used on 208V single phase with 25% reduced temperature output. Please note per UL standards the rating plate and installation instructions will all be according to a 240V applied voltage. Check with local officials prior to derating the electrical infrastructure.

12/16 FORM NO. THD-PTE

The new degree of comfort.™

PERFORMANCE™ **tankless electric water heaters**

Product Specifications (all models)	**Rated Pressure**	25 PSI min., 150 PSI max.
	Certifications	ETL Listed to UL 499 and CSA
	Std. Temp. Settings	120°F (Adjustable 80°F-140°F)
	Temp. Accuracy	+/–1° at steady state flow
	Turn-On	0.3 GPM

Suggested Specifications
Unit shall have copper clad immersion heating element(s) with brass terminations for increased durability. External temperature control and display adjustable in 1° increments with a range of 80°-140°F. Display shall be capable of displaying setpoint temperature in Celsius or Fahrenheit temperature scales. Unit shall utilize a flow meter with a 0.3 gpm activation point and manage power based on actual flow rate and inlet temperature. Values should be processed 60 times per second. Unit shall be WQA certified lead free, certified to UL499 and CSA22.2.

Optional Inline Flow Regulator

- Enhanced outlet temperature control
- Install on the outlet side of the heater
- Limit maximum volume to the specified flow rate to ensure exiting temperature is within an acceptable range
- Flow Regulators for ½" and ¾" plumbing connections
- Flow range: 1 to 5 gallons per minute

RHEEM PART NUMBER	GPM RATING OF INSERTS PROVIDED	CONNECTION SIZE
RTE10001A	1.0, 1.5, 2.0	1/2" NPT
RTE10001B	2.0, 3.0, 4.0, 5.0	3/4" NPT

Suggested Sizing Guide

	COLD CLIMATE (INLET TEMP. 35-45°F)	WARM CLIMATE (INLET TEMP. 50-60°F)	HOT CLIMATE (INLET TEMP. 65-75°F)
RETEX-04	N/A	N/A	N/A
RETEX-06	N/A	N/A	N/A
RETEX-08	RTE10001A	RTE10001A	RTE10001A
RETEX-11	RTE10001A	RTE10001A	RTE10001A
RETEX-13	RTE10001A	RTE10001A	RTE10001A
RETEX-18	RTE10001B	RTE10001B	RTE10001B
RETEX-24	RTE10001B	RTE10001B	RTE10001B
RETEX-27	RTE10001B	RTE10001B	RTE10001B
RETEX-36	RTE10001B	RTE10001B	RTE10001B

Selection based on inlet temperature and an outlet temperature setting of 105°F

In keeping with its policy of continuous progress and product improvement, Rheem reserves the right to make changes without notice.

Rheem Water Heating • 101 Bell Road
Montgomery, Alabama 36117-4305 • www.rheem.com

12/16 FORM NO. THD-PTE

Electric Tankless Water heaters

INSTALLATION INSTRUCTIONS & HOME OWNERS MANUAL

IMPORTANT SAFETY INFORMATION

When installing or using any high voltage electrical appliance, basic safety precautions should always be followed. Under no circumstance should you attempt to clean, install, inspect, repair, disassemble or otherwise service this water heater, without first shutting off **all** power to the unit directly at the circuit breaker box. **SERIOUS BODILY INJURY OR DEATH COULD OCCUR IF YOU IGNORE THIS WARNING.**

THIS PRODUCT SHOULD BE INSTALLED BY A QUALIFIED ELECTRICIAN AND A QUALIFIED PLUMBER IN ACCORDANCE WITH ALL NATIONAL, STATE, PROVINCIAL AND LOCAL ELECTRICAL & PLUMBING CODES.

PLEASE READ THESE INSTRUCTIONS THOROUGHLY AND COMPLETELY PRIOR TO INSTALLATION & USE. FAILURE TO DO SO COULD CAUSE PROPERTY DAMAGE, SERIOUS INJURY, OR DEATH.

This manual should be given to the homeowner after installation and should be retained for future reference.

Proposition 65 Warning: This product contains chemicals known to the State of California to cause cancer, birth defects or other reproductive harm

Tested and certified by the Water Quality Association against NSF/ANSI 372 for lead free compliance.

Recognize this symbol as an indication of Important Safety Information!

DO NOT destroy this manual. Please read carefully and keep it in a safe place for future reference

IMPORTANT SAFETY INFORMATION.
READ ALL INSTRUCTIONS BEFORE USING



DANGER!

WATER TEMPERATURE SAFETY SETTING

Safety and energy conservation are factors to be considered when selecting the water temperature setting of water heater's thermostat. Water temperatures above the 125°F (52°C) can cause severe burns or death from scalding. Be sure to read and follow the warnings outlined on the label pictured below. This label is also located on the water heater near the thermostat access panel.

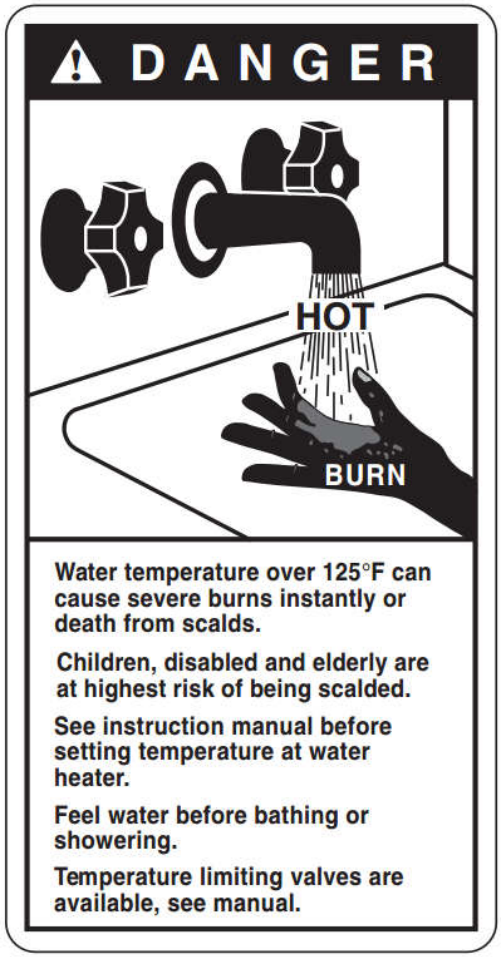

Notice: Mixing valves are recommended for reducing point of use water temperature by mixing hot and cold water in branch water lines. It is recommended that a mixing valve complying with the Standard for Temperature Actuated Mixing Valves for Hot Water Distribution Systems, ASSE 1017 be installed.

Time/Temperature Relationship in Scalds

Water Temperature	Time to Produce a Serious Burn
120°F (49°C)	More than 5 minutes
125°F (52°C)	1 1/2 to 2 minutes
130°F (54°C)	About 30 seconds
135°F (57°C)	About 10 seconds
140°F (60°C)	Less than 5 seconds
145°F (63°C)	Less than 3 seconds
150°F (66°C)	About 1 1/2 seconds
155°F (68°C)	About 1 second

Table courtesy of Shriners Burn Institute

The chart shown above may be used as a guide in determining the proper water temperature for your home.

DANGER Once the unit is installed and checked for water leaks turn the breaker on and push the power button to activate heater. Heater can be deactivated by pushing the power button one more time. When the heater is powered on the electronic control will automatically power the element when it senses water flow.

The temperature of the hot water delivered by the heater depends on the wattage of the heating element, temperature of the incoming cold water and the water flow rate through the water heater. Reducing the flow rate increase the outlet temperature and increasing the flow rate reduces the outlet temperature.

It is important to keep in mind that all tankless water heaters are subject to a maximum flow rate. The heater will not be capable of heating water to desired temperature if the flow rate exceeds heaters capability. In order for the heater to operate properly, it must be carefully matched to its application and aerators should be used to limit water flow. See the Table I to determine the maximum flow rates and temperature rise for each model.

CAUTION Outlet water temperature may be higher when using the tankless heater at low flow rates or when used with high inlet water temperature.

ABOUT YOUR TANKLESS WATER HEATER

Congratulations on the purchase of your Electric Tankless Water Heater!

To get the best performance and energy savings from your electric tankless water heater, it is important that it be installed in accordance with our instructions and the electrical and plumbing codes applicable to your area, and that you read this manual thoroughly for important operating instructions and tips.

If you have questions at any time, please contact us directly at:

Manufacturer's National Service Department
400 Captain Neville Dr. Waterbury, CT 06705 Phone: 1-(800)-374-8806.

CONTENTS

1. BEFORE INSTALLATION
2. SELECTING A LOCATION TO INSTALL
3. MOUNTING YOUR WATER HEATER
4. PLUMBING INSTALLATION
5. ELECTRICAL INSTALLATION
6. SIZING GUIDE
7. GENERAL OPERATING INSTRUCTIONS
8. MAINTENANCE
9. TROUBLE SHOOTING GUIDE
10. USER INTERFACE

1- BEFORE INSTALLATION

PLEASE READ THESE INSTRUCTIONS THOROUGHLY AND COMPLETELY PRIOR TO INSTALLATION & USE. FAILURE TO FOLLOW INSTRUCTIONS COULD CAUSE PROPERTY DAMAGE, SERIOUS PERSONAL INJURY, OR DEATH.

By installing this product, you acknowledge the terms of the manufacturer's warranty. Once the heater is installed, do not return product to the place of purchase. If you have any questions regarding the warranty or product return policies, please contact Manufacturer's national service department at 1-(800) 374-8806.

Inspect all components. The contents of your box should include one of the following units:

- 3.5kW
- 5.5kW

2- SELECTING A LOCATION TO INSTALL

This product is designed to be installed **indoors only**.

⚠ **DO NOT** install this product in a location where it may be subjected to freezing temperatures. If the water inside your tankless water heater freezes, it can cause severe and permanent damage that is not covered under your warranty.

⚠ **DO NOT** locate the water heater in a location that is difficult to access.

Make sure that the water heater and hot water outlet pipe are out of reach of children so they are unable to tamper with the temperature controls or injure themselves by touching the hot water outlet pipe. The outlet water pipe can get very hot.

This product does NOT require venting.

Avoid installing your tankless water heater in a location prone to excessive humidity, moisture, or dust, or in an area where it may be splashed with water or other liquids. DO NOT install under water pipes or air conditioning lines that might leak or condense moisture that could then drip onto the heater. DO NOT install above electrical boxes or junctions.

⚠ **CAUTION** The water heater should not be located in an area where leakage will result in damage to the area adjacent to it or to lower floors of the structure. Where such areas cannot be avoided, it is recommended that a suitable catch pan, adequately drained, be installed under the water heater. Make sure to follow all code requirements for such installations as required for your area. We recommend that you install a drip pan (connected to a safe drain) below the water heater to avoid property damage in the unlikely event of a leak. Alternatively, you can install an active water leak detector and shutoff valve designed to turn off your water supply in the event that a leak is ever detected.

3- MOUNTING YOUR WATER HEATER

Your tankless water heater should be secured to the mounting surface with 4 screws (minimum 1” (25.4mm) long) follow the installation template for heaters. Make sure that the mounting surface is solid and secure, and ensure that the unit is level prior to securing the screws. For ease of installation and servicing, we recommend that this product be installed in an upright position with the inlet and outlet water connections at the bottom of the unit.

Recommended Clearances: 6” (304.8mm) above and below the heater

6” (152.4mm) in front of and to the sides of the heater

⚠ **Flammable materials should be kept at least 24” (609.6mm) away from your water heater and the hot water outlet pipe.**

4- PLUMBING INSTALLATION

Please follow all plumbing instructions carefully. We recommend that this product be installed by a licensed and qualified plumber in accordance with all applicable national, state, provincial, and local plumbing codes.

Installation Instructions

This water heater is supplied with ½" NPT fittings, DO NOT weld or use paste.

STEP 1: Thoroughly flush cold supply line of debris and connect the HOT WATER line to the water heater OUTLET located on the left side of the heater when facing unit. Connect the COLD WATER line to the water heater marked COLD WATER INLET on the right side when facing unit.
STEP 2: After tightening both fittings at the water heater, open several hot water faucets and allow water to run though the water heater for at least 2 to 3 minutes. This process purges all the air from the water lines and MUST be performed prior to turning on the power at the unit. FAILURE TO FOLLOW THIS STEP CAN CAUSE PERMANENT DAMAGE TO THE HEATING ELEMENTS. If any maintenance is performed on the water heater or the home's plumbing system that may introduce air into the plumbing pipes, it is important to turn the power off to the water heater and purge the air out of the lines before allowing the unit to power up.
STEP 3: Carefully inspect all connections, unions, and the pressure relief valve (if installed) for leaks.

IMPORTANT NOTES:

1. Do not solder any pipes with the unit connected to pipes – heat from soldering may damage the flow sensor. Doing so will void the warranty.

2. This automatic tankless water heater is equipped with both computer-controlled and electro-mechanical auto resetting thermostat switches for high-limited temperature protection. Since this product does not use a storage tank, the use of a temperature pressure relief valve (T&P) is not required for most installations. UL Standard 499 does NOT require that a pressure relief valve be used. However, a T&P valve may be required to meet installation codes in your area. If one is required, install the pressure relief valve in accordance with local codes and ensure that it operates correctly and that air is purged from the valve prior to installing the water heater. When connecting to Flex or High Temperature CPVC pipe, we recommend that a T&P valve be used for added safety.
   Please note: Installations in the Commonwealth of Massachusetts and State of Kentucky require a pressure relief valve. Please check your local installation codes for any special requirements.

3. The maximum operating water pressure is 150 PSI (1035 kPa). If the water pressure is higher, a pressure reducing valve must be installed on the main incoming water supply line prior to installing the electric tankless water heater.

4. Flexible water heater hoses are recommended to be used with your water heater as part of the installation. When connecting the inlet water pipe to the unit, make sure to use a wrench to hold the unit's connection, and another wrench to tighten, so that the flow sensor on the unit will not be loosened or damaged. Serious internal damage to the water heater can occur if the inlet or outlet connections are over tightened or if solder connections were made.

5. We recommend that a manual shut-off valve (ball valve) is installed on the inlet and outlet of the water heater so that there is a convenient shut-off point available in the event that future maintenance or servicing is required. It is extremely important to flush the lines to eliminate all plumbing paste or residue in the lines caused by any welding or soldering before connecting pipes to the water heater.

We recommend that all the water pipes or hoses within 3' (1m) of the inlet and outlet connections be rated for high temperature applications with a 150°F (66°C) minimum.

⚠ **WARNING CHECK FOR LEAKS BEFORE PROCEEDING TO ELECTRICAL INSTALLATION**

5- ELECTRICAL INSTALLATION

⚠ **WARNING** Manufacturer recommends that this product be installed by a licensed and qualified electrician in accordance with all applicable national, state, provincial, and local electrical codes. As with all electrical appliances, under no circumstances should you attempt to install, repair or disassemble this water heater without first shutting off all power to the unit directly at the fuse or breaker box. **Make sure to shut off all breakers. SERIOUS BODILY INJURY OR DEATH COULD OCCUR IF YOU IGNORE THIS WARNING.**

All wiring (wire gauge) and circuit protection (breakers) must comply with the U.S. National Electrical Code (NEC) in the USA, or the Canadian Electrical Code (CEC) in Canada. Failure to do so could result in property damage and/or personal injury, and void your warranty. Note: The Canadian Electrical Code generally requires that all supply wires and corresponding circuit protection used for domestic hot water heating and hydronic heating applications be sized to a minimum of 125% of the maximum current rating of the heater (see heater specifications below for details).

Before installing this product, ensure that the home has sufficient electrical power available to handle the maximum amperage load of the applicable heater.

IMPORTANT NOTES:

3.5 and 6.0 kW heaters require 1 set of wire and ground **(see wiring diagram)**

Please see electrical specifications by heater input and wiring diagram on the next page for additional electrical information.
Each set of wires must be connected to its own individual double pole breaker.

Installation Instructions

STEP 1: Take each wire pair and connect them to one breaker (see wiring diagram). Make sure that each breaker is connected with one black wire and one red wire
STEP 2: Using a suitable wire gauge that meets all applicable electrical codes for the size of the breakers used, run the correct sets of wire from the home's main breaker panel to the tankless water heater.
STEP 3: A separate ground conductor for each incoming circuit is required.
STEP 4: DOUBLE CHECK the electrical connections to make sure they are correct and that all wire connections are tight and secure. Also confirm that the correct breaker size and wire gauge has been used and confirm that the unit has been connected to a ground in accordance with applicable codes.
STEP 5: Confirm that all the air has been purged from the water lines prior to turning on power to the unit. Refer to STEP 2 in the plumbing installation section.

⚠ **CAUTION** Ensure that you have made the correct connections. You must follow the wire connection as shown to ensure proper operation of the unit. If you mix up one set of wires with another, the unit will not operate correctly even though it turns on and otherwise appears to function properly.

The water heater is now installed and ready to use! Follow the General Operating Instructions to complete the setup. We highly recommend that this is done with the homeowner present.

Electrical Specifications by Heater Input

HEATER INPUT	3.5kW	5.5kW
ELEMENTS	1	1
VOLTAGE	120 V	220 V
MAX kW	3.5kW	5.5 kW
MAX AMPERAGE DRAW	29AMPS	25 AMPS
REQUIRED BREAKERS	1 x 30 AMP	1 X 30 AMP
REQUIRED WIRE GAUGE	1 x 10 AWG	1 x 10 AWG

POU ELECTRICAL 3.5@120V

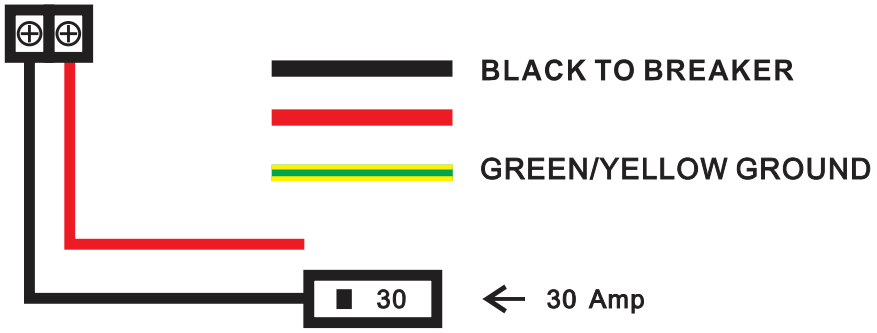

POU ELECTRICAL 5.5@220V

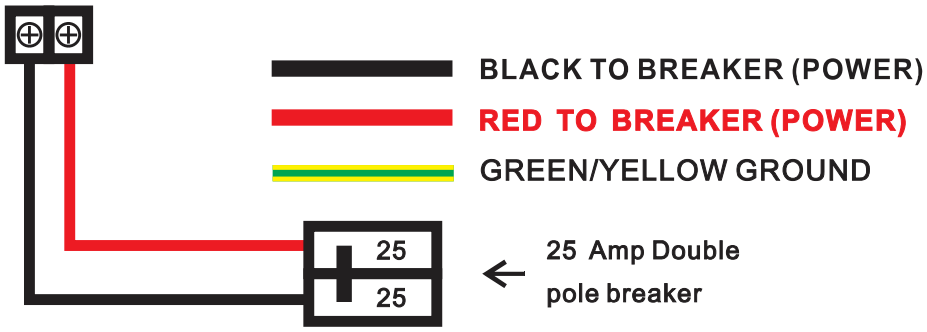

6- SIZING GUIDE

The chart below indicates maximum temperature rise for a given flow rate

		GPM to Temp Rise in °F														
	GPM	**0.3**	**0.4**	**0.5**	**0.6**	**0.7**	**0.8**	**0.9**	**1**	**1.1**	**1.2**	**1.3**	**1.4**	**1.5**	**1.6**	**1.7**
POU kW	**3**	68.3	51.2	41.0	34.2	29.3	25.6	22.8	20.5	18.6	17.1	15.8	14.6	13.7	12.8	12.1
	5.5	125.2	93.9	75.1	62.6	53.7	47.0	41.7	37.6	34.2	31.3	28.9	26.8	25.0	23.5	22.1

		LPM to Temp Rise in °C													
	LPM	**1.1**	**1.5**	**1.9**	**2.3**	**2.6**	**3.0**	**3.4**	**3.8**	**4.2**	**4.5**	**4.9**	**5.3**	**5.7**	**6.1**	**6.4**
POU kW	**3**	37.9	28.5	22.8	19.0	16.3	14.2	12.6	11.4	10.3	9.5	8.8	8.1	7.6	7.1	6.7
	5.5	69.6	52.2	41.7	34.8	29.8	26.1	23.2	20.9	19.0	17.4	16.1	14.9	13.9	13.0	12.3

AERATOR SUPPLIED IS .5GPM/ 1.9LPM

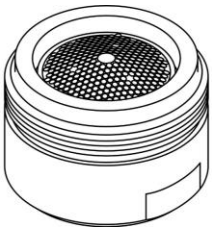

To ensure the optimal temperature output and overall performance of your tankless water heater an aerator supplied with heater should be installed.

⚠ **DANGER INCREASING THE FLOW RATE REDUCES THE OUTLET TEMPERATURE. PLEASE BE SURE TO PROPERLY SIZE YOUR AERATOR TO PREVENT SCALDING**

7- GENERAL OPERATING INSTRUCTIONS

Operating your new tankless water heater is similar to using any traditional water heating system. However, it is very important that you carefully read all of the setup procedures and operating instructions and tips to ensure the maximum performance and energy savings from your new water heater. We recommend that all members of the household read these General Operating Instructions.

How your new water heater works:

This tankless water heater differs from a conventional storage water heater as it does not store hot water, but heats water as it flows through the heater.

The temperature of the hot water delivered by the heater depends on the wattage of the heating element, temperature of the incoming cold water and the water flow rate through the water heater.

It is important to keep in mind that all tankless water heaters are subject to a maximum flow rate. The heater will not be capable of heating water to desired temperature if the flow rate exceeds heaters capability. In order for the heater to operate properly, it must be carefully matched to its application and aerators should be used to limit water flow. See the Table I to determine the maximum flow rates and temperature rise for each model.

⚠ **CAUTION Outlet water temperature may be higher when using the tankless heater at low flow rates or when used with high inlet water temperature.**

Water Quality: Quality of water should be taken into consideration when installing and maintaining the water heater. Water conditions outside the recommended levels outlined below are not permitted and can damage the water heater. Manufacture reserves the right to deny any warranty claim regarding damage suffered due to use in water conditions not in accordance with the table below.
If water heater is installed in an area that is known to have hard water that cause scale build-up, the water must be treated and/or the heater exchanger flushed regularly to prevent damage to heat exchanger and/or heating elements.
A water treatment device or water softener should be installed to maintain optimal performance of the water heater in hard water areas. Contact customer service for additional information on these accessory kits.

Chart for Recommended Water Quality Levels

pH	Total Dissolved Solids (TDS)	Free Carbon Dioxide (CO2)	Total Hardness	Aluminum	Chloride	Copper	Iron	Manganese	Zinc
6.5 - 8.5	Up to 500 mg/L	Up to 500 mg/L	Up to 200 mg/L	0.05 to 0.2 mg/L	Up to 250 mg/L	Up to 1.0 mg/L	Up to 0.3 mg/L	Up to 0.05 mg/L	Up to 5 mg/L

8- MAINTENANCE

To ensure maximum performance of your water heater and to reduce the risk of a water leak, we recommend the following maintenance:

Inspect the connections on the inlet and outlet of the water heater at least on an annual basis for any signs of damage or failure. Any signs of damage, cracks, leakage or weakness should be addressed. Take care not to over tighten the connections. Serious internal damage to your water heater can occur if you over tighten the water heater connections at the unit.

IMPORTANT NOTES:

⚠ **DANGER** As with all electrical appliances, under no circumstances should you attempt to install, repair or disassemble this water heater without first shutting off all power to the unit directly at the fuse or circuit breaker. **SERIOUS BODILY INJURY OR DEATH COULD OCCUR IF YOU IGNORE THIS WARNING.**

When any maintenance is performed on the water heater or the home's plumbing system that may introduce air into the plumbing pipes, it is important to turn the power off to the water heater and purge the air out of the lines before allowing the unit to power up. FAILURE TO DO SO COULD CAUSE PERMANENT DAMAGE TO THE HEATING ELEMENT AND VOID YOUR WARRANTY.

If you have a water supply with a high level of mineralization (hard water), you should increase the frequency of your maintenance.

9- TROUBLE SHOOTING GUIDE

Are you having problems with your water heater?

Please call or email our customer service and technical support team for any help you may need.

TOLL FREE 1-(800) 374-8806

The following table represents some of the most common technical support questions we receive. Before calling us, please read thoroughly to see if your question or problem is addressed.

PROBLEM	POSSIBLE CAUSE	SOLUTION
Water heater is not heating at all (water is flowing but the unit is not heating - the outgoing water temperature is the same as the cold water supply) - the digital display does NOT light up.	No power or incorrect wiring.	Make sure the breakers at main electrical panel are ON. You may have a faulty breaker or unit may be wired incorrectly.
	Flow rate is too low / water pressure is too low.	Your water heater has an activation flow rate of approximately 0.3 GPM (1.1 LPM). If your water flow rate is less than this level, your unit will not activate. Increase the flow rate.
Water heater is not heating at all (water is flowing but the unit is not heating - the outgoing water temperature is the same as the cold water supply) The digital display DOES light up.	Internal part failure.	Please call us for technical assistance.
Water heater is heating, but the water temperature is not hot enough.	Flow rate is too high.	Depending on your incoming water temperature and the kW of your heater, your water flow rate may exceed the physical heating capacity of your water heater. Reduce the flow rate by installing an aerator
	Crossed wires.	If it's a new installation, have your electrician double check the wiring. Is possible that the wiring is incorrect.
	Voltage less than 120 or 240 volts.	The heating elements on your water heater are design for 120 or 240 volts. When used with a lower voltage, they produce less heating power. You may need to upgrade to a larger input heater.
	Mixing too much cold water.	You do not need to mix as much cold water with your tankless water heater compared to when you use a conventional water heater. You may also have an anti-scald feature on your faucet that is mixing cold water. These types of faucets can usually be adjusted to reduce the amount of cold water mixed.
	Voltage less than 120 or 240 volts.	The computer chips in your tankless water heater are programmed with the expectation that your incoming line voltage is 120 or 240 volts. If you have less than 120 or 240 volts, it may affect the reading on your water heater's digital display and cause it to read slightly higher than the actual output temperature. To compensate for this, increase the setting on your water heater if you need / want hotter water.
The water temperature at the faucet is less or greater than the temperature setting of my water heater.	Anti-Scald pressure/balancing valve or tempering valve.	Your faucet may have an anti-scald feature or a tempering valve that automatically mixes cold water even when you turn your control lever or handle to full hot. These devices are usually adjustable so you can turn off the cold mix completely. You can compensate for this by increasing the setting on your water heater if you need/want hotter water.
	Thermal loss due to long pipe run	As the hot water from the heater runs through the hot water delivery system to your faucet, some heat will be lost especially if it has long distance to travel or the pipes are cold. This is normal. You can compensate for this by increasing the setting on your water heater if you need/want hotter water.
	Water temperature at the faucet is too hot	Check your flow for too little flow, wrong aerator size, or internal part failure. Call us for technical assistance.

10- USER INTERFACE

Power

- Push the power button, the display will turn on
- Push the power button again, the display will turn off

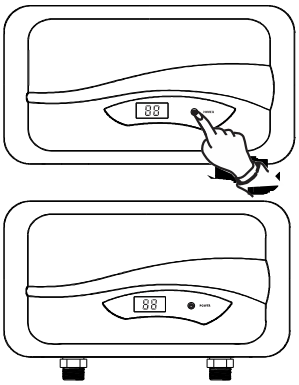

DANGER Hotter water increases the potential for Hot Water SCALDS

CAUTION – removing the cover to change the temperature set point exposes electrical shock and burn hazards, which can cause INJURY or DEATH. Adjustment should only be done by a licensed plumber or electrician.

Heater input: 3.5 kW -6.0kW

① Cold water Inlet
② Hot water outlet
③ 10 AWG Wire
④ Outlet Temp. Display
⑤ POWER button

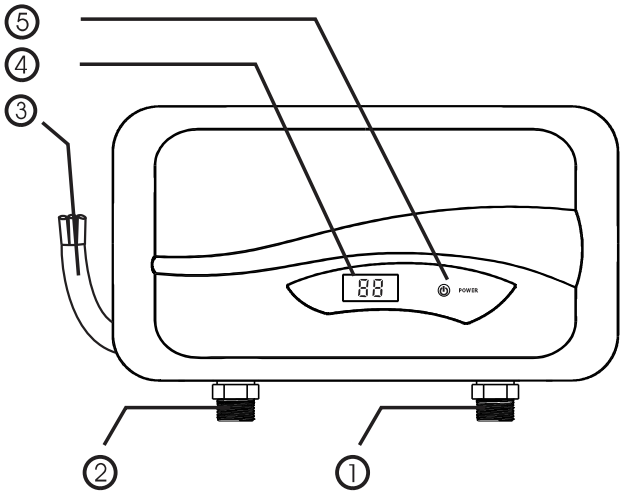

NOTES

Section 3.7.3

Space Heater

Section 3.7.3.1

Space Heater – Explosion Proof

ISO 9001:2015 CERTIFIED

Hazloc Heaters™

Safe heat when you need it!



C SA® US
235730

Includes our EXCaliber™ HEAT EXCHANGER CORE

XEU1

New features and options now available!

Explosion-Proof Electric Air Heater For Hazardous Locations

Class I, Division 1 & 2, Groups C & D
Class II, Division 1 & 2, Groups F & G
Temperature Code T3B (3kW/35kW = T3A)

Class I, Zone 1 & 2, Groups IIA & IIB, T3

www.HazlocHeaters.com

Hazloc Heaters™ is a manufacturer of industrial-grade unit heaters suitable for hazardous and severe-duty locations.



The **XEU1** series of explosion-proof electric air heaters is designed to meet the most demanding requirements of heavy industry. The harsh operating conditions of this industry require heating equipment that is safe, reliable, dependable, and available when you need it. **XEU1** unit heaters are designed to provide primary or supplementary heating for comfort or freeze protection in areas that are classified as hazardous locations (Gas and Dust atmospheres).

Designed for hazardous locations!

All ***Hazloc Heaters™*** **XEU1** models are **designed to meet U.S. and Canadian certification standards and the spark-resistant fan assembly is also compliant to AMCA 99-10, Type B.** The three sizes of **XEU1** heaters include our ***ExCaliber™*** high performance liquid-to-air heat-exchanger cores that are available in **35 model choices** of voltage and heat output combinations to meet your specific requirements.

The rugged and versatile **XEU1** heater incorporates a high quality immersion heater, high performance fan and motor assembly, a sturdy 14 GA steel cabinet with epoxy/polyester powder-coating for corrosion resistance, large control enclosure with an extra port for convenient wiring of an external room thermostat, and enclosure O-rings to minimize moisture ingress.



XEU1 heaters are suitable for a wide variety of applications that include but are not limited to oil & gas drilling rigs, petrochemical facilities, refineries, chemical storage and handling facilities, paint storage areas, sewage treatment plants, aircraft servicing areas, grain elevators, coal preparation areas, and other areas containing combustible dusts (flour, wood, plastics, chemicals, etc.).



Rugged design, but easily maintained!

All **XEU1** heaters are designed for industrial applications with all features being heavy-duty to meet your most demanding environments and long-life expectations. Even with heavy-gauge steel construction used throughout the heater it does not inhibit maintenance of the product since the **XEU1** has been designed for easy field servicing with a removable heat exchanger core assembly, split fan guard, and replaceable automatic and manual reset high-limits. An added benefit is our 36-month heater warranty!

Maximum durability… rugged fin tubes!

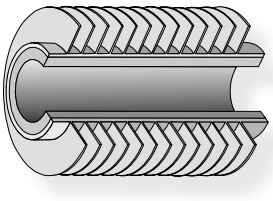

All **XEU1** ***ExCaliber™*** liquid-to-air heat-exchanger cores are evacuated & sealed and are constructed using rugged carbon-steel tubes with copper-free, roll-formed aluminum fins to maximize heat transfer and carbon-steel headers for **maximum durability, resistance to corrosion, and longer life** in your demanding applications.

"Safe heat when you need it!"

Dedicated to Performance and Reliability!

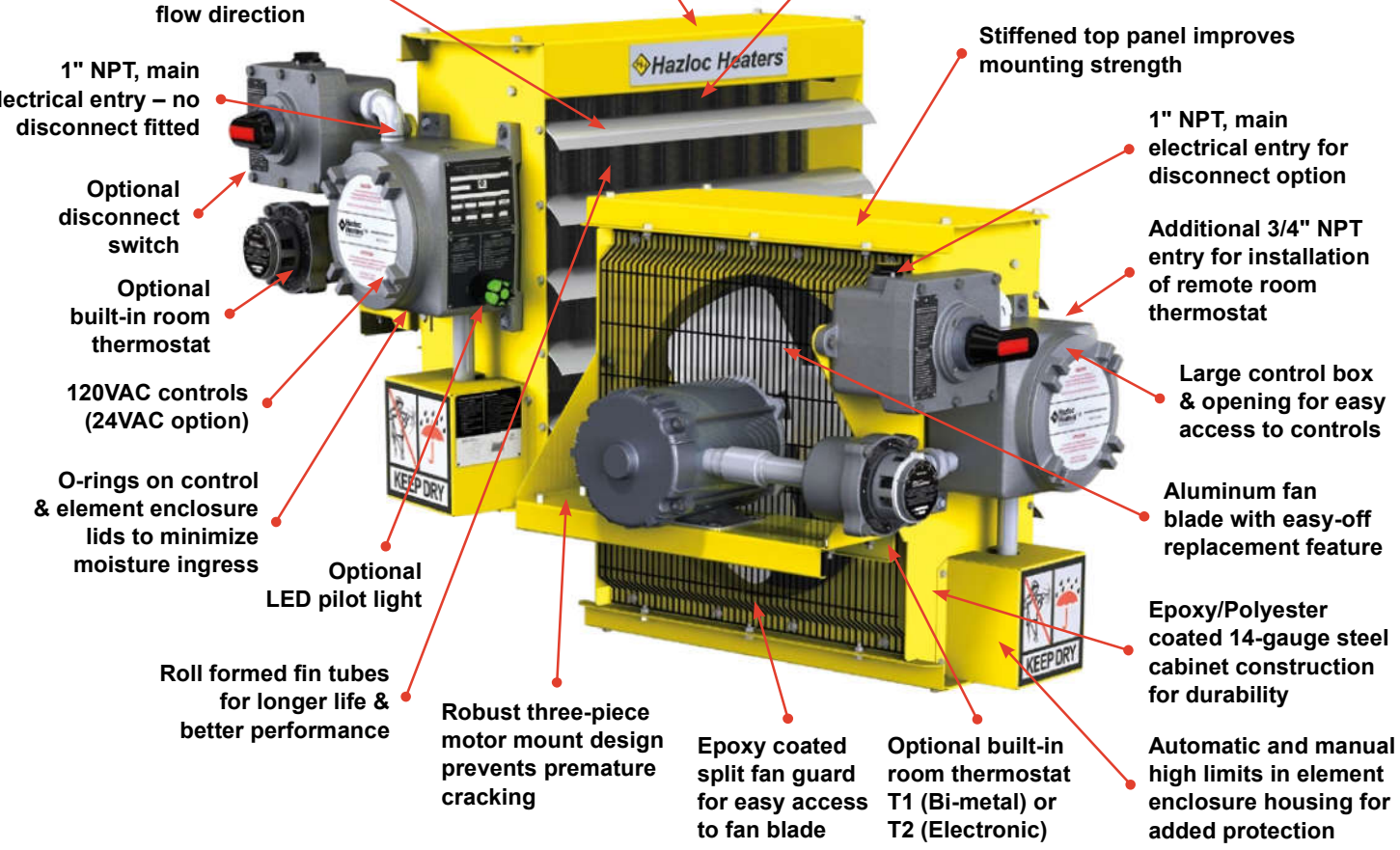

NOTE: **XEU1 heaters must not be exposed to rain or snow. This applies to both installed and stored heaters.**

Suitable for the following hazardous location classifications:

- **Class I, Division 1 & 2, Groups C & D, T3B (3kW/35kW = T3A)**
- **Class II, Division 1 & 2, Groups F & G, T3B (3kW/35kW = T3A)**
- **Class I, Zone 1 & 2, Groups IIA & IIB, T3**

Limited 36-month Warranty



ExCaliber™ heat-exchanger core is easy to remove

The ***ExCaliber***™ vacuum sealed liquid-to-air heat exchanger core is constructed using rugged, copper-free, roll-formed aluminum fins and protected by a pressure relief device, automatic reset high limit, and a back-up manual reset high limit.

The **XEU1** heater has the highest air temperature rise, on average, in the industry across our complete kW range.

XEU1 Model Coding

Heater Model Code & Option Codes

Model Code | **Option Codes**

XEU 1 - 12 - 100 - 480 3 60 - A - Y - B | **T1, D, P, etc.** (stamped on separate field of data plate)

Model Series

Generation
For major revisions

Fan Size

12 inches	**12**
16 inches	**16**
20 inches	**20**

Power Output

3 kW	**030**	12 inch fan size
5 kW	**050**	12 inch fan size
7.5 kW	**075**	12 inch fan size
10 kW	**100**	12 inch fan size
15 kW	**150**	16 inch fan size
20 kW	**200**	16 inch fan size
25 kW	**250**	20 inch fan size
30 kW	**300**	20 inch fan size
35 kW	**350**	20 inch fan size

Heater Line Voltage

208 Volts	**208**	3 to 15 kW sizes only
240 Volts	**240**	3 to 15 kW sizes only
480 Volts	**480**	All kW sizes
600 Volts	**600**	All kW sizes

Δ Contact factory for extended shipping lead time on Heresite coatings.

Product Revision No.
For minor revisions

Factory Built-in Options

N	No options selected
Y	Yes, options selected

Options Codes (stamped on separate field of data plate)

Refer to page 8 for description >

Refer to Page 8 for description >
(Only available when 24VAC control voltage is selected)

Includes louvers & fan blade >

Includes louvers & fan blade >

T1	Thermostat, Bi-metal **(BTX1-N-A)**
T2	Thermostat, Electronic **(XET1-1-N-A)**
D	Disconnect Switch
P	Pilot Light **(Heat On)**
F	Continuous Fan
H1Δ	Heresite Core
H2Δ	Heresite Cabinet
H3Δ	Heresite Core/Cabinet

Control Voltage

A	120VAC
B	24VAC (safer)

Frequency

60	60 Hertz

Phase

Refer to Page 7 for availability
All kW sizes

1	1 Phase
3	3 Phase



Model Code Format

When requesting a quote or ordering refer to Page 7 and then please follow the **"Model Code"** format above.

Example:

Model Code: **XEU1-12-100-480360-A-Y-B**

Option Code: **T1, D, P**

XEU1 Specifications By Model Size

Model		XEU1-12				XEU1-16		XEU1-20		
Fan diameter	in (mm)	12 (304.8)				16 (406.4)		20 (508.0)		
Nominal kW		3	5	7.5	10	15	20	25	30	35
Air delivery	cfm m³/hr	350 595	400 680	600 1019	800 1359	1200 2039	1700 2888	2100 3568	3000 5097	3000 5097
Approximate air velocity	fpm m/s	422 2.1	479 2.4	718 3.6	958 4.9	808 4.1	1145 5.8	916 4.6	1309 6.6	1309 6.6
Approximate horizontal air throw	ft m	13 3.9	15 4.6	22 6.7	30 9.1	33 10.1	46 14.0	41 12.5	61 18.6	61 18.6
Motor power	hp (watts)	¼ (186)				¼ (186)		½ (373)		
Maximum mounting height (to underside of heater)	ft m	7 2.1	7 2.1	7.5 2.3	9.5 2.9	10 3.0	11 3.4	12 3.6	15 4.6	15 4.6
Approximate net weight (without disconnect) (with disconnect)	 lbs (kg) lbs (kg)	 129 (58.5) 142 (64.4)			 133 (60.3) 146 (66.2)	 161 (73.0) 174 (78.9)		 192 (87.1) 205 (92.9)		
Approximate shipping weight (without disconnect) (with disconnect)	 lbs (kg) lbs (kg)	 188 (85.3) 201 (91.2)			 192 (87.1) 205 (93.0)	 224 (101.6) 237 (107.5)		 261 (118.4) 274 (124.3)		
Wood crate dimensions Wood packaging material is in compliance with ISPM No. 15.	W x D x H in mm	31.5 x 29.5 x 29.25 800 x 749 x 743				35.5 x 29.5 x 31.75 902 x 749 x 806		39.5 x 29.5 x 35.75 1003 x 749 x 908		

XEU1 Physical Dimensions

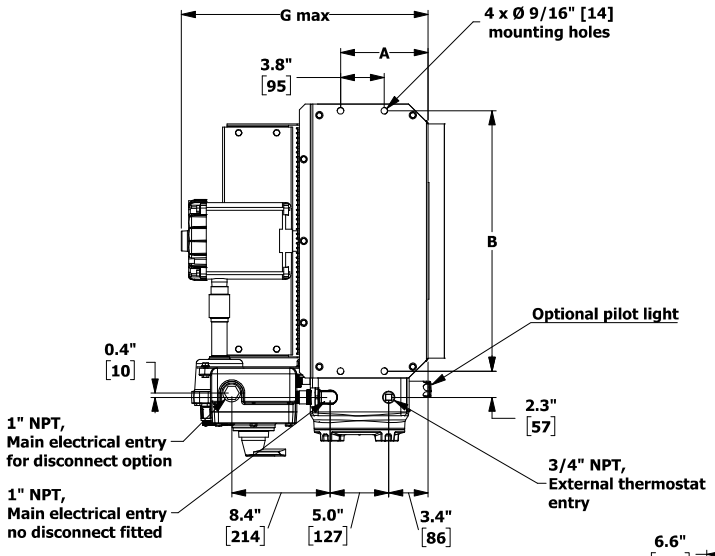

Heater Size	12 (3-10kW)	16 (15-20kW)	20 (25-35kW)
Dim.	Inches (mm)	Inches (mm)	Inches (mm)
A	7.5 (191)	7.5 (191)	7.5 (191)
B	18.2 (462)	22.3 (566)	26.3 (668)
C	16.3 (414)	20.3 (516)	24.3 (617)
D	19.0 (483)	23.0 (584)	27.0 (686)
E	19.5 (495)	23.5 (597)	27.5 (699)
F	3.1 (79)	5.1 (130)	7.1 (180)
G	22.3 (566)	22.3 (566)	23.3 (592)

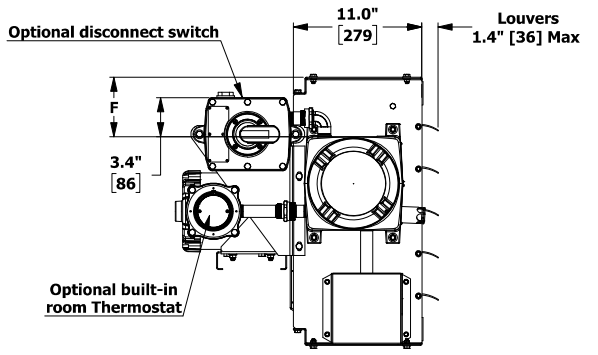

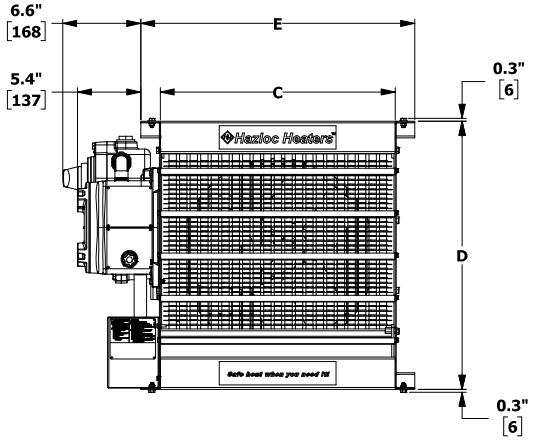

XEU1 General Specifications

	Certification	$_{c}CSA_{US}$ 235730 - Certified to Canadian and U.S. standards
Approvals	North American Hazardous Location Classifications	Class I, Division 1 & 2, Groups C & D Class II, Division 1 & 2, Groups F & G Temperature Code T3B (3kW/35kW =T3A)
		Class I, Zone 1 & 2, Groups IIA & IIB, T3
	Temperature Code	Division System - T3B 165°C (329°F); [3kW/35kW = T3A 180°C (356°F)] Zone System - T3 200°C (392°F)
Cabinet	Cabinet Material	14-gauge (0.075 in.) (1.9 mm) steel. Yellow epoxy/polyester powder coated with five-stage pretreatment, including iron phosphate.
	Fan Guard	Split design with close wire spacing. A 3/8 in. (9.5 mm) diameter probe will not enter. Black polyester powder coated.
	Louver Blades	Anodized extruded aluminum.
	Conduit Materials & Fittings	Plated steel and aluminum alloy for corrosion resistance.
	Fasteners	Zinc plated steel for corrosion resistance.
	Enclosures	Cast aluminum (non-copper alloy) NEMA 7 & 9 type with O-ring.
	Mounting Holes	9/16” diameter holes – Four located on the top face of heater.
Motor/Fan	Motor Type	Explosion-proof, thermally protected, 1725 RPM permanently lubricated ball bearing type with 56 frame and “easy-off” fan blade replacement feature.
	Fan	Three-blade spark-resistant aluminum, steel spider and hub with 5/8 in. bore.
	Fan Shroud	Spark-resistant aluminum. Compliant to AMCA 99-10, Type B.
Heat Exchanger	Heating Elements	Long-life, low watt-density, high grade metal-sheathed
	Heat Transfer Fluid	Ethylene glycol and water including corrosion inhibitors.
	Header Material	Carbon steel.
	ExCaliber™ Core	Carbon steel headers and element housing with O-ring. Fin tubes are carbon steel tubes with copper-free, roll-formed aluminum fins @ 10 fins per in. Vacuum sealed. Coated with black, high-heat enamel.
Protection	Temperature High Limits	One automatic reset rated for 100,000 cycles, and one manual reset. Both are snap-action bimetal type, open on temperature rise.
	Pressure Relief	High-quality stainless steel pressure relief device.
Controls	Control Circuit	Built-in 120VAC or 24VAC control (24VAC recommended).
	Control Contactor	40 FLA (50A resistive per pole) Definite Purpose. Rated for 500,000 mechanical operations.
	Control Transformer	Multitap primary, 120VAC or 24VAC secondary.
	Fuse Protection	Thermal delay fuse with spare, .25” x 1.25” , 120VAC = 1/4A, 24VAC = 1A.
	Room Thermostat With Lockable Temperature Dial (option code T1 or T2)	Built-in, **BTX1-N-A (T1) or XET1-1-N-A (T2)** explosion-proof thermostat, 40°F to 80°F (5°C to 25°C). Conduit is factory sealed between enclosures. Wall mount thermostats also available. See Page 8. *Note: Optional **BLK1-N-A** thermostat conversion kit allows simple interchangeability from a built-in to a wall mount configuration.*
Load Isolation	Disconnect Switch (option code D)	Built-in, **XDC-01** explosion-proof disconnect switch, 600VAC, 50A max with lock-out feature. Conduit is factory sealed between enclosures. Also available in a wall mount version.
Additional Options	Pilot Light (option code P)	Built-in “Heat on” Green LED pilot light with lens guard.
	Continuous Fan (option code F)	Continuous fan operation. Circulates air and prevents gas pockets from forming.
	Heresite Coating (option code H1, H2, H3)	H1 = Heresite Core; or H2 = Heresite Cabinet (includes louvers & fan blade); or H3 = Heresite Core and Cabinet. *Note: Contact factory for Heresite delivery lead time.*
Operating Limits	Ambient Temperature	-40°F to 104°F (-40°C to 40°C). Storage: -58°F to 140°F (-50°C to 60°C)
	Maximum Altitude	10,000 ft (3048 m) above sea level.

XEU1 Heater Performance Data

kW (btu/hr)	Line Volts	Ø	Fan Dia. in.	Model See page 4 to complete model coding	Temperature Classification Code	Total Current A	Air Temp. Rise °F	Air Temp. Rise °C
3 (10236)	208	1	12	XEU1-12-030-208160 *	T3A	16.7	32.2	18.0
	240	1	12	XEU1-12-030-240160 *	T3A	14.9	32.2	18.0
	208	3	12	XEU1-12-030-208360 *	T3A	9.4	32.2	18.0
	240	3	12	XEU1-12-030-240360 *	T3A	8.3	32.2	18.0
	480	3	12	XEU1-12-030-480360 *	T3A	4.2	32.2	18.0
	600	3	12	XEU1-12-030-600360 *	T3A	3.3	32.2	18.0
5 (17060)	208	1	12	XEU1-12-050-208160 *	T3B	26.3	44.0	24.5
	240	1	12	XEU1-12-050-240160 *	T3B	23.2	44.0	24.5
	208	3	12	XEU1-12-050-208360 *	T3B	15.0	44.0	24.5
	240	3	12	XEU1-12-050-240360 *	T3B	13.1	44.0	24.5
	480	3	12	XEU1-12-050-480360 *	T3B	6.6	44.0	24.5
	600	3	12	XEU1-12-050-600360 *	T3B	5.2	44.0	24.5
7.5 (25590)	208	1	12	XEU1-12-075-208160 *	T3B	38.4	42.5	23.7
	240	1	12	XEU1-12-075-240160 *	T3B	33.7	42.5	23.7
	208	3	12	XEU1-12-075-208360 *	T3B	21.9	42.5	23.7
	240	3	12	XEU1-12-075-240360 *	T3B	19.1	42.5	23.7
	480	3	12	XEU1-12-075-480360 *	T3B	9.6	42.5	23.7
	600	3	12	XEU1-12-075-600360 *	T3B	7.6	42.5	23.7
10 (34120)	240	1	12	XEU1-12-100-240160 *	T3B	44.1	41.8	23.2
	208	3	12	XEU1-12-100-208360 *	T3B	28.9	41.8	23.2
	240	3	12	XEU1-12-100-240360 *	T3B	25.2	41.8	23.2
	480	3	12	XEU1-12-100-480360 *	T3B	12.6	41.8	23.2
	600	3	12	XEU1-12-100-600360 *	T3B	10.1	41.8	23.2
15 (51180)	208	3	16	XEU1-16-150-208360 *	T3B	42.7	40.6	22.6
	240	3	16	XEU1-16-150-240360 *	T3B	37.2	40.6	22.6
	480	3	16	XEU1-16-150-480360 *	T3B	18.6	40.6	22.6
	600	3	16	XEU1-16-150-600360 *	T3B	14.9	40.6	22.6
20 (68240)	480	3	16	XEU1-16-200-480360 *	T3B	24.6	38.0	21.1
	600	3	16	XEU1-16-200-600360 *	T3B	19.7	38.0	21.1
25 (85300)	480	3	20	XEU1-20-250-480360 *	T3B	31.3	39.1	21.8
	600	3	20	XEU1-20-250-600360 *	T3B	25.1	39.1	21.8
30 (102360)	480	3	20	XEU1-20-300-480360 *	T3B	37.3	32.6	18.2
	600	3	20	XEU1-20-300-600360 *	T3B	29.9	32.6	18.2
35 (119420)	480	3	20	XEU1-20-350-480360 *	T3A	43.3	37.9	21.1
	600	3	20	XEU1-20-350-600360 *	T3A	34.7	37.9	21.1

(*) Refer to page 4 for Control Voltage and Factory Built-in Option codes to complete entire model code for ordering.

Nomenclature/Useful Formulas/Conversions

1 kW = 3,414 btu/hr; Final air temp. = Entering air temp. + Temp. rise; °C = 5/9 (°F - 32)

AC/DC Formulas			
To Find	**Direct Current**	**AC - 1 phase**	**AC - 3 phase**
Amps when horsepower is known	$\frac{HP \times 746}{E \times Eff}$	$\frac{HP \times 746}{E \times Eff \times PF}$	$\frac{HP \times 746}{1.73 \times E \times Eff \times PF}$
Amps when kilowatts is known	$\frac{kW \times 1000}{E}$	$\frac{kW \times 1000}{E \times PF}$	$\frac{kW \times 1000}{1.73 \times E \times PF}$
Amps when kVA is known	$\frac{KVA \times 1000}{E}$	$\frac{kVA \times 1000}{E}$	$\frac{kVA \times 1000}{1.73 \times E}$
Kilowatts	$\frac{I \times E}{1000}$	$\frac{I \times E \times PF}{1000}$	$\frac{I \times E \times 1.73\ PF}{1000}$
Kilovolt-Amps	$\frac{I \times E}{1000}$	$\frac{I \times E}{1000}$	$\frac{I \times E \times 1.73}{1000}$
Horsepower (output)	$\frac{I \times E \times Eff}{746}$	$\frac{I \times E \times Eff \times PF}{746}$	$\frac{I \times E \times Eff \times 1.73 \times PF}{746}$

Where **I** = amps; **E** = phase-to-phase volts; **Eff** = efficiency expressed as a decimal; **PF** = power factor expressed as a decimal; **kW** = kilowatts; **KVA** = kilovolt amperes; **HP** = horsepower.

Accessories

Mounting Brackets

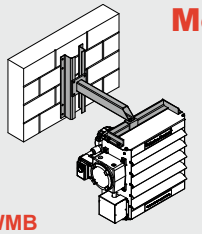

WMB
Wall Mounting Bracket
For use in buildings that have substantial walls. The Z sections provide additional support where necessary.

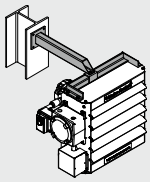

BMB
Basic Mounting Bracket
For applications where the support arm can be bolted or welded directly to structural steel or concrete.

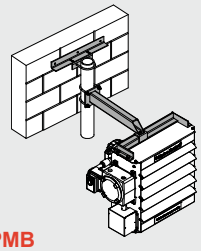

PMB
Pipe Mounting Bracket
For buildings with insufficient strength to use other types of mounting brackets. Requires 3 in. pipe (3.5 in. O.D., min. Sch. 40, not supplied).

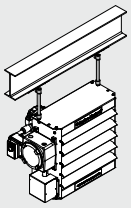

HMB
Hanging Mounting Bracket
Ideal and economical if adequate overhead structure exists. Requires 1/2 in. pipe, cut and threaded (min. Sch. 40 not supplied).

Note: When ordering mounting brackets, please specify the type of bracket preferred and the basic model code of the heater to be mounted. Example, **PMB-XEU1-16.** Mounting kits are made of carbon steel and coated with black enamel. Structural support of heater and bracket during transit is required.

Explosion-proof ExCaliber™ Series Thermostats, Remote Mount

BTX1-N-A (SPDT) Heating or Cooling (Bi-metal thermostat used on XEU1 heaters with built-in option code (T1) selected)



Class I, Division 1 & 2, Groups C & D
Class II, Division 1, Groups E, F & G
Class II, Division 2, Groups F & G; Class III; T6
-50°C ≤ T amb ≤ +40°C, IP66, Type 4
Class I, Zone 1 & 2, Ex db, Groups IIA, IIB, T6, Gb
Class I, Zone 1 & 2, AEx db, Groups IIA, IIB, T6, Gb
Class II, Zone 21 & 22, Ex tb, Groups IIIA, IIIB & IIIC, T85°C, Db
Class II, Zone 21 & 22, AEx tb, Groups IIIA, IIIB & IIIC, T85°C, Db
Temperature adjustment range: 40°F to 80°F (5°C to 25°C); 3/4" - NPT conduit opening on top and bottom; Ship wt - 3.5 lbs (1.6 kg)
22 Amps Resistive Load, 480VAC Max; 1/2HP @ 125VAC; 1HP @ 250VAC (suitable for 24VAC or 120VAC control circuit)

XET1-1-N-A (Electronic) Heating only (24VAC required)



Class I, Division 1 & 2, Groups B, C & D
Class II, Division 1, Groups E, F & G
Class II, Division 2, Groups F & G; Class III; T6
-50°C ≤ T amb ≤ +40°C, IP66, Type 4
Class I, Zone 1 & 2, Ex db, Groups IIA, IIB+H_2, T6, Gb
Class I, Zone 1 & 2, AEx db, Groups IIA, IIB+H_2, T6, Gb
Class II, Zone 21 & 22, Ex tb, Groups IIIA, IIIB & IIIC, T85°C, Db
Class II, Zone 21 & 22, AEx tb, Groups IIIA, IIIB & IIIC, T85°C, Db
Temperature adjustment range: 40°F to 80°F (5°C to 25°C); 3/4" – NPT conduit opening on top and bottom; Ship wt – 3.4 lbs (1.5 kg)
24VAC 50/60Hz; 1 Amp max continuous (suitable for 24 volt control circuit only)

BLK1-N-A Junction Box (Heater thermostat conversion kit)



The BLK1-N-A heater thermostat conversion kit allows simple interchangeability from a built-in to a wall mount configuration.

Explosion-proof Disconnect Switch, Remote Mount

XDC-01 (Disconnect switch used on XEU1 heaters with built-in option code (D) selected)



Class I, Division 1 & 2, Groups C & D; Class II, Division 1, Groups E, F & G; Class II, Division 2, Groups F & G; Class III
Class I, Zone 1 & 2, Grp IIA & IIB, T5
600V, 50A max;15 HP@208/240V, 3 phase; 30 HP@480/600V, 3 phase; 2 HP@120V, 1 phase; 7.5 HP@240V, 1 phase
Ship wt – 12.0 lbs (5.4 kg)

XEU1 Engineering Specifications

1.0 General

1.1 The explosion-proof unit heater(s) shall be supplied and installed, in accordance with the plans and specifications, with ratings as listed in the schedule of electrical heating equipment, and shall be Hazloc Heaters' XEU1 series.

1.2 The unit heater(s) shall be $_{C}CSA_{US}$ certified for use in Class I, Divisions 1 & 2, Groups C & D; Class II, Divisions 1 & 2, Groups F & G; and Class I, Zones 1 & 2, Groups IIA & IIB Hazardous Locations and shall be rated for National Electric Code and Canadian Electric Code Temperature Code T3B, 165°C (329°F); [3kW/35kW = T3A, 180°C (356°F)] for Division System and T3, 200°C (392°F) for Zone System.

2.0 Heat Exchanger

2.1 The Heat Exchanger shall be a liquid-to-air type consisting of steel tubes with integral aluminum fins @ 10 fins per inch and be evacuated, sealed and painted with black, high heat enamel.

2.2 The heat exchanger shall be protected by a high-quality stainless steel pressure relief device with no serviceable parts.

2.3 The Heat Exchanger shall be filled and sealed to design level with a custom-blended, long-life solution of ethylene-glycol and water including inhibitors to provide superior corrosion protection.

2.4 The Heat Exchanger shall include heavy-duty immersion heating elements brazed into a heavy steel flange. The elements shall consist of high-quality resistance wire embedded in a magnesium oxide refractory and sheathed in a metal tubing. The heater is to be protected by two snap-action bimetal temperature high-limit cutouts. The primary high-limit shall be an automatic reset type rated for 100,000 cycles, and the secondary high-limit a manual reset type and will shut off the heater if the fluid temperature rises due to a lack of heat dissipation. The high-limits shall not be effected by altitude or changes in atmospheric pressure.

3.0 Fan and Motor Assembly

3.1 The Fan Assembly shall include a ball bearing, permanently lubricated, thermally protected explosion-proof motor rated for continuous duty at 40°C (104°F). The motor shaft shall provide a method for easy field replacement of fan blade assembly without the use of special tools.

3.2 The Fan and Fan Shroud shall be aluminum to prevent sparking and be compliant to AMCA 99-10, Type B. The assembly shall be directly connected to the motor, dynamically balanced, and designed specifically for the heater application.

3.3 The Fan shall be shielded with a heavy-duty steel wire, polyester-coated guard. To provide easy maintenance and cleaning of the fan and motor, the fan guard shall be of a two piece construction. The guard shall not allow a 3/8 in. (9.5 mm) probe to enter.

4.0 Control Center

4.1 The Control Center shall be completely factory pre-wired and tested, and enclosed in a NEMA 7 and 9 type of explosion-proof control enclosure with O-ring and a large threaded cover for easy access.

4.2 The Control Center shall include a 40 FLA (50A resistive per pole) Definite Purpose magnetic contactor sized to handle the heater and motor current, and shall be rated for 500,000 cycles operation. The encapsulated severe-duty coil shall be rated 120VAC or 24VAC (specify one) and separately fuse protected.

4.3 The Control Center shall include a control voltage transformer, the primary voltage being the same as the heater voltage and the secondary to be 120VAC or 24VAC (specify one).

4.4 The Control Center shall include a terminal block for thermostat connection.

4.5 The Control Center shall include in-line thermal delay fuse protection on secondary side of transformer. The fuse holder shall be mounted on the printed circuit board and contain both an operating fuse and a spare fuse.

5.0 Cabinet Assembly

5.1 The Cabinet Assembly shall be fabricated from 14 gauge steel with a baked epoxy/polyester powder coating over a 5-stage pretreatment including iron phosphate, for protection from corrosive atmospheres.

5.2 The Cabinet shall include four 9/16 inch (14.3 mm) mounting holes located on top face of heater.

5.3 Louver blades shall be individually adjustable and made of anodized extruded aluminum.

6.0 Mounting Brackets

6.1 The heater shall be provided with a steel Mounting Bracket, coated with black enamel, specifically designed to bear the weight of the heater assembly.

6.2 The Mounting Bracket shall be – (select one):

- ☐ Type WMB – Wall Mounting Bracket
- ☐ Type BMB – Basic Mounting Bracket
- ☐ Type PMB – Pipe Mounting Bracket
- ☐ Type HMB – Hanging Mounting Bracket

7.0 Room Thermostat Options

7.1 The heater shall be supplied with (select one):

- ☐ Option Code T1. Built-in BTX1-N-A Bi-metal explosion-proof room thermostat mounted on the control enclosure side of the heater.
- ☐ Option Code T2. Built-in XET1-1-N-A Electronic explosion-proof room thermostat mounted on the control enclosure side of the heater (requires 24VAC control option).
- ☐ Field installed remote mount BTX1-N-A Bi-metal explosion-proof thermostat.
- ☐ Field installed remote mount XET1-1-N-A Electronic explosion-proof thermostat (requires 24VAC control option).

8.0 Disconnect Switch Options

8.1 The heater shall be supplied with (select one):

- ☐ Built-in XDC-01 explosion-proof disconnect switch mounted on the control enclosure side of the heater.
- ☐ Field installed remote mount XDC-01 explosion-proof disconnect switch.

9.0 Additional Options

9.1 The heater shall be supplied with (select one or more):

- ☐ Built-in Pilot light (Heat On) mounted on front of control enclosure.
- ☐ Continuous fan operation.
- ☐ Heresite coated core.
- ☐ Heresite coated cabinet (includes louvers & fan blade).

Guide to Hazardous Locations
North America/ATEX/IECEx

Classification of Divisions and Zones			
Hazard Level	**Division Scheme**	**Zone Scheme**	**Definitions**
Continuous Hazard	Division 1	Zone 0 / Zone 20	A location in which an explosive atmosphere is continually present.
Intermittent Hazard		Zone 1 / Zone 21	A location in which an explosive atmosphere is likely to occur in normal operation.
Hazard Under Abnormal Conditions	Division 2	Zone 2 / Zone 22	A location in which an explosive atmosphere is not likely to occur in normal operation, but may occur for short periods.

Atmosphere Groups			
Substance	**Hazard Class**	**Division Groups**	**Zone Groups**
Acetylene	Class I Flammable Gases	Group A	IIC
Hydrogen		Group B	IIB+H_2
Ethylene		Group C	IIB
Propane		Group D	IIA
Methane		Group D	IIA[#]
Combustible Metal Dusts	Class II Combustible Dusts	Group E*	IIIC
Combustible Carbonaceuous Dusts		Group F	IIIB
Combustible Dusts not in Group E or F (Flour, Grain, Wood, Plastics, Chemicals)		Group G	IIIB
Combustible Fibers and Flyings	Class III Fibers and Flyings	Not Applicable	IIIA

* Group E is applicable to Class II, Division 1 only
[#] Methane is a Group IIA gas for non-mining applications

Temperature Codes		
Max. Surface Temperature	**NEC® 500 / CEC®**	**NEC® 500 / IEC – Group II**
450°C (842°F)	T1	T1
300°C (572°F)	T2	T2
280°C (536°F)	T2A	
260°C (500°F)	T2B	
230°C (446°F)	T2C	
215°C (419°F)	T2D	
200°C (392°F)	T3	T3
180°C (356°F)	T3A	
165°C (329°F)	T3B	
160°C (320°F)	T3C	
135°C (275°F)	T4	T4
120°C (248°F)	T4A	
100°C (212°F)	T5	T5
85°C (185°F)	T6	T6

Note: Consult the current NEC and CEC codes for the latest technical and installation information

North American transition to the zone system

The U.S. and Canada have recently revised installation codes to recognize an international 3-Zone area classification system for equipment used in hazardous locations.

In Canada, all new installations must use the 3-Zone system. Existing installations may continue to use the 2-Division system or opt to re-classify using the 3-Zone system.

In the U.S., all installations (both new and existing) can either use the 2-Division system or use the 3-Zone system.

Additional Products Available

Hazloc Heaters™ offers a wide variety of steam/hydronic air heaters, explosion-proof electric air heaters, washdown/corrosion resistant air heaters, non-hazardous area air heaters, air sensing thermostats, disconnect switches and other related accessories.

Please visit **www.HazlocHeaters.com** and click on the *Products* link.



Hazloc Heaters™ ***"Safe heat when you need it!"***

Quality Mission Statement

Quality is… customers that come back, and products that don't.

Limited 36-Month Warranty

Hazloc Heaters™ warrants all **XEU1** series of explosion-proof electric heaters against defects in materials and workmanship under normal conditions of use for a period of thirty-six (36) months from date of purchase based on the following terms:

1. The heater must not be modified in any way.
2. The heater must be stored, installed and used only in accordance with the owner's manual and attached data plate information.
3. Replacement parts will be provided free of charge as necessary to restore any unit to normal operating condition, provided that the defective parts be returned to us freight prepaid and that the replacement parts be accepted freight collect.
4. The complete heater may be returned to our manufacturing plant for repair or replacement (at our discretion), freight charges prepaid.
5. Contamination by dirt, dust, etc. or corrosion will not be considered as defects.
6. This warranty shall be limited to the actual equipment involved and, under no circumstances, shall include or extend to installation or removal costs, or to consequential damages or losses.

Hazloc Heaters™

Safe heat when you need it!

Available from:

#1, 666 Goddard Ave. NE
Calgary, Alberta T2K 5X3 Canada
Tel.: +1-403-730-2488
Fax: +1-403-730-2482
Customer Toll Free (U.S. & Canada):
+1-866-701-Heat (4328)
www.HazlocHeaters.com

Hazloc Heaters is a trademark of Hazloc Heaters Inc.
The information contained in this brochure has been carefully checked and verified for accuracy. Specifications subject to change without notice.

PRINTED IN CANADA
© Copyright 2016
Cat. No. XEU1-201906-1.0

Notes

1. Net weight

Without Disconnect Switch
3, 5 & 7.5kW = 129 lbs (58.5 kg)
10 kW = 133 lbs (60.3 kg)

With Disconnect Switch
3, 5 & 7.5kW = 142 lbs (64.4 kg)
10 kW = 146 lbs (66.2 kg)

2. Shipping Weight

Without Disconnect Switch
3, 5 & 7.5kW = 188 lbs (85.3 kg)
10 kW = 192 lbs (87.1 kg)

With Disconnect Switch
3, 5 & 7.5kW = 201 lbs (91.2 kg)
10 kW = 205 lbs (93.0 kg)

3. Ambient Temperature Limits and Altitude

Operating: -40°F to 104°F (-40°C to 40°C)
Storage: -58°F to 140°F (-50°C to 60°C)
Maximum Altitude: 10,000 ft (3048 m) ASL

4. Air Delivery

3 kW = 350 cfm (595 m^3/hr)
5 kW = 400 cfm (680 m^3/hr)
7.5 kW = 600 cfm (1019 m^3/hr)
10 kW = 800 cfm (1359 m^3/hr)

Note:
The fan shroud is made of spark resistant aluminum compliant to AMCA 99-10, Type B

5. Hazardous Location Classification

Class I, Divisions 1 & 2, Groups C & D
Class II, Divisions 1 & 2, Groups F & G
Temperature Code T3B (3kW = T3A)
Class I, Zones 1 & 2 , Groups IIA & IIB, T3

6. Materials

Cabinet: 14 Ga, Yellow Epoxy/Polyester Powder Coated
Core: Carbon Steel with Copper-free Integral Aluminum Fins Coated with Black, High Heat Enamel (Heresite coated core and/or cabinet available)

Table 1 Specifications For XEU1 Heater, 12" Fan Size With Available Options

KW (BTU/HR)	Line Volt	PH ø	Fan Dia. (inch)	Total Amps	Minimum Circuit Ampacity	Max Fuse Size	Supply Wire 90°C (AWG)	BASE MODEL	Control Voltage 120V or 24V		Built-in Thermostat T1 or T2		Built-in Disconnect Switch ☑	Built-in Pilot Light ☑	Continuous Fan ☑
									120 ☑	24 ☑	T1 ☑	T2 ☑			
3 (10236)	208	1	12	16.7	20.9	25	12	XEU1-12-030-208160	☐	☐	☐	☐	☐	☐	☐
		3		9.4	11.8	15	14	XEU1-12-030-208360	☐	☐	☐	☐	☐	☐	☐
	240	1		14.9	18.6	20	12	XEU1-12-030-240160	☐	☐	☐	☐	☐	☐	☐
		3		8.3	10.4	15	14	XEU1-12-030-240360	☐	☐	☐	☐	☐	☐	☐
	480	3		4.2	5.2	15	14	XEU1-12-030-480360	☐	☐	☐	☐	☐	☐	☐
	600	3		3.3	4.1	15	14	XEU1-12-030-600360	☐	☐	☐	☐	☐	☐	☐
5 (17060)	208	1	12	26.3	32.9	35	8	XEU1-12-050-208160	☐	☐	☐	☐	☐	☐	☐
		3		15.0	18.7	20	12	XEU1-12-050-208360	☐	☐	☐	☐	☐	☐	☐
	240	1		23.2	29.0	30	10	XEU1-12-050-240160	☐	☐	☐	☐	☐	☐	☐
		3		13.1	16.4	20	12	XEU1-12-050-240360	☐	☐	☐	☐	☐	☐	☐
	480	3		6.6	8.2	15	14	XEU1-12-050-480360	☐	☐	☐	☐	☐	☐	☐
	600	3		5.2	6.6	15	14	XEU1-12-050-600360	☐	☐	☐	☐	☐	☐	☐
7.5 (25590)	208	1	12	38.4	47.9	50	8	XEU1-12-075-208160	☐	☐	☐	☐	☐	☐	☐
		3		21.9	27.4	30	10	XEU1-12-075-208360	☐	☐	☐	☐	☐	☐	☐
	240	1		33.7	42.1	45	8	XEU1-12-075-240160	☐	☐	☐	☐	☐	☐	☐
		3		19.1	23.9	25	10	XEU1-12-075-240360	☐	☐	☐	☐	☐	☐	☐
	480	3		9.6	12.0	15	14	XEU1-12-075-480360	☐	☐	☐	☐	☐	☐	☐
	600	3		7.6	9.6	15	14	XEU1-12-075-600360	☐	☐	☐	☐	☐	☐	☐
10 (34120)	208	3	12	28.9	36.1	40	8	XEU1-12-100-208360	☐	☐	☐	☐	☐	☐	☐
	240	1		44.1	55.1	60	8	XEU1-12-100-240160	☐	☐	☐	☐	☐	☐	☐
		3		25.2	31.4	35	8	XEU1-12-100-240360	☐	☐	☐	☐	☐	☐	☐
	480	3		12.6	15.7	20	12	XEU1-12-100-480360	☐	☐	☐	☐	☐	☐	☐
	600	3		10.1	12.6	15	14	XEU1-12-100-600360	☐	☐	☐	☐	☐	☐	☐

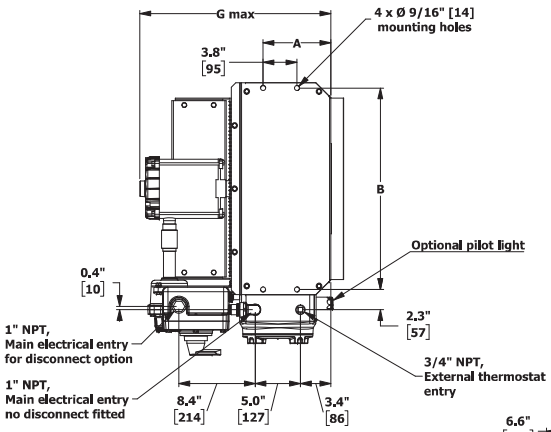

Heater Size	12 (3-10kW)
Dim.	Inches (mm)
A	7.5 (191)
B	18.2 (462)
C	16.3 (414)
D	19.0 (483)
E	19.5 (495)
F	3.1 (79)
G	22.3 (566)

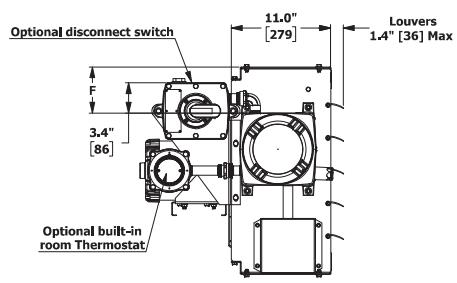

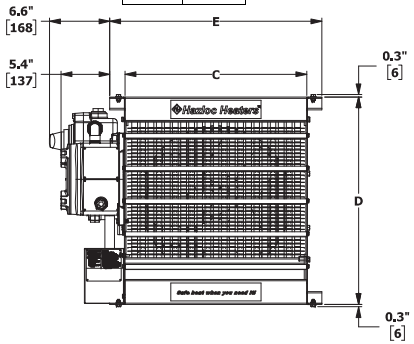

XEU 1 - 12 - 100 - 480 3 60 - A - Y - B

Model Series

Generation
For major revisions

Fan Size

12 Inches	12

Power Output

3 kW	030	12 inch fan size
5 kW	050	12 inch fan size
7.5 kW	075	12 inch fan size
10 kW	100	12 inch fan size

Heater Line Voltage

208 Volts	208
240 Volts	240
480 Volts	480
600 Volts	600

Phase

1 Phase	1
3 Phase	3

Product Revision No.
For minor revisions

Factory Built-in Options

N	No options selected
Y	Yes, options selected

Options Codes (stamped on separate field of data plate)

T1	Thermostat (BTX1-N-A)
T2	Thermostat (XET1-1-N-A)
D	Disconnect Switch
P	Pilot Light (Heat On)
F	Continuous Fan
H1	Heresite Core
H2	Heresite Cabinet
H3	Heresite Core/Cabinet

Requires 24VAC control >
Includes louvers & fan blade >

Control Voltage

A	120 Volt
B	24 Volt

Frequency

60	60 Hertz

Approval Drawing	XEU1, 12" Fan Size Heater
May 26, 2021	Version 4.1
Hazloc Heaters Inc.	Calgary, Alberta

Hazloc Heaters™
Safe heat when you need it!

© Copyright 2021

Wiring Diagram for Standard Fan Operation

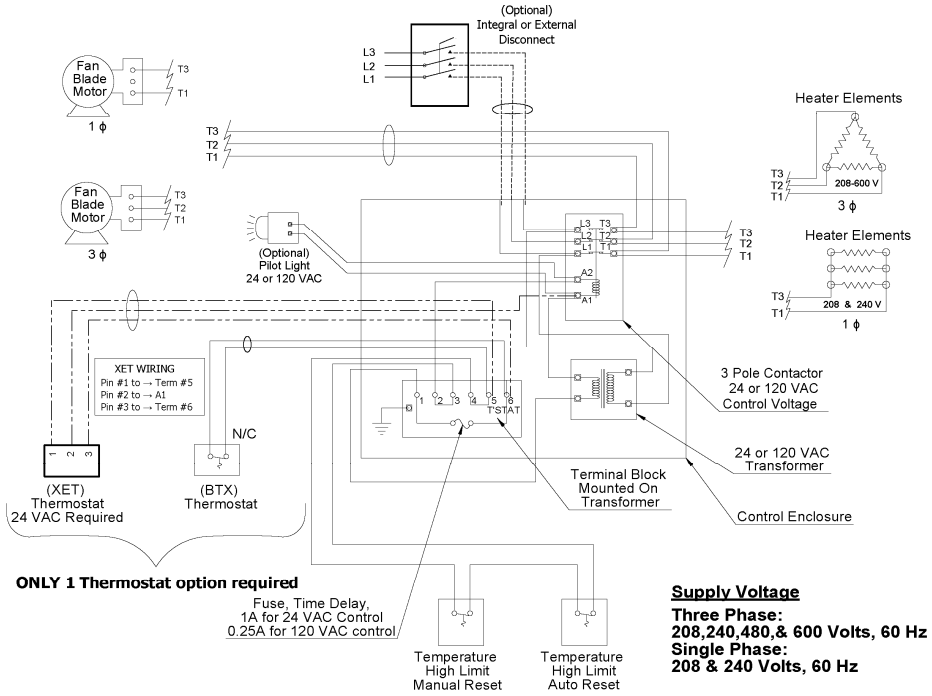

Supply Voltage
Three Phase:
208,240,480,& 600 Volts, 60 Hz
Single Phase:
208 & 240 Volts, 60 Hz

Wiring Diagram for Continuous Fan Operation

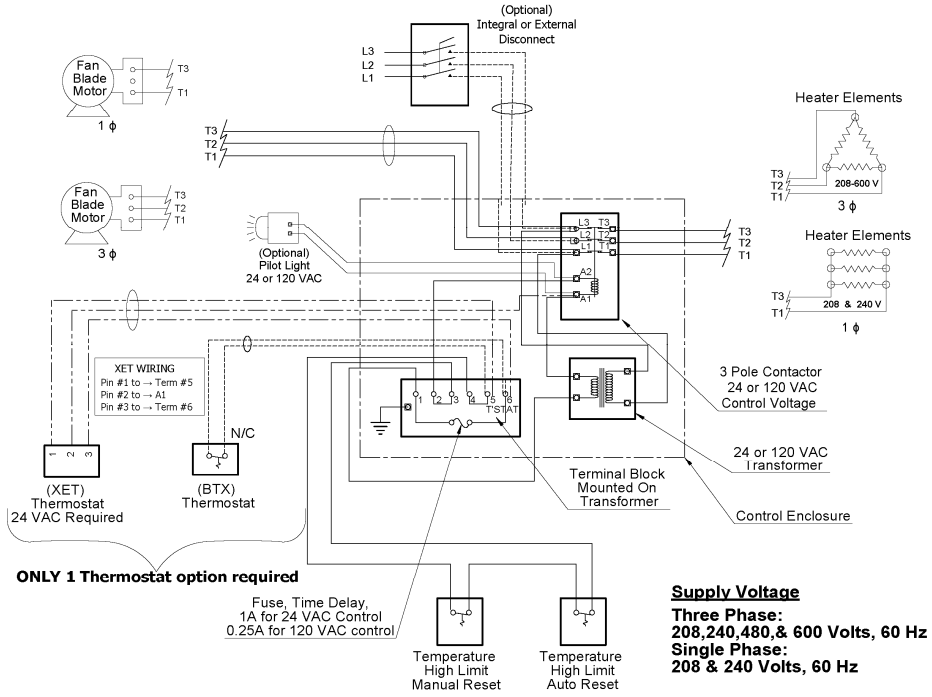

Supply Voltage
Three Phase:
208,240,480,& 600 Volts, 60 Hz
Single Phase:
208 & 240 Volts, 60 Hz

Approval Drawing	XEU1, 12" Fan Size Heater
May 26, 2021	Version 4.1
Hazloc Heaters Inc.	Calgary, Alberta

Hazloc Heaters™
Safe heat when you need it!

© Copyright 2021

Section 3.7.3.2

Space Heater – Nonexplosion Proof

ODS Ceiling Fan Heater





ODSR
Recessed

ODSA (2kW to 5kW)
ODSB (7.5kW to 10kW)
Surface

VERSION AVAILABLE

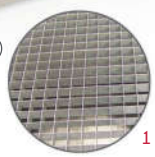
1

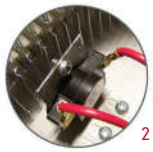
2


3

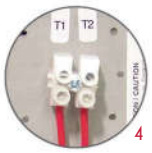

4


5

Features

Color
- Standard: white, almond.
- Optional (upcharge applicable): metallic silver, bronze, metallic charcoal, aluminum, semi-gloss black, sand.
- Custom colors available upon request.

Finish
- Standard: epoxy/polyester powder paint.

Voltage
- 208V, 240V, 277V, 347V, 480V, 600V, 1 or-3 phase.

Construction
- Outlet grille made of flat ribbon wire. 1
- High-limit temperature control with automatic reset. 2

Fan
- Totally enclosed and lifetime-lubricated ball bearing motor.
- Fan delay purges heater of residual heat. 3

Heating element
- Three stainless steel tubular heating elements with aluminum fins. 5

Control
- 240/208V control circuit standard (except for 2 to 5kW at 277V have 277V control standard).
- Built-in 240V contactor for some models (see table).
- 24V and 120V control circuit available.
- Built-in tamperproof thermostat available.
- 24V relay (with or without transformer) available.
- Continuous circulation controlled by a built-in switch with power-on indicator light available (-CV).

Any remote thermostat or relay must be connected to the heater control terminal block. 4

Installation
- Recommended height: between 8 ft. (2.4 m) and 12 ft. (3.6 m).
- Recessed into insulated or T-bar ceiling (ODSR).
- Surface mounting (ODSA and ODSB), T-BAR adaptor optional.

Note: We recommend installing this product on an outside ceiling to avoid vibrations spreading to an adjacent room.

Warranty
- 3-year warranty against defects.
- 10-year warranty on the heating elements.

Application
- Apartment building, commercial building, drop ceiling, stairwell, garage.

ODSA - Surface
2-5kW, 25 lbs (11.4 kg)

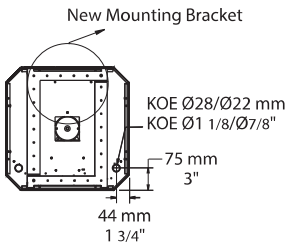

ODSB - Surface
7.5-10kW, 34 lbs (15.5 kg)

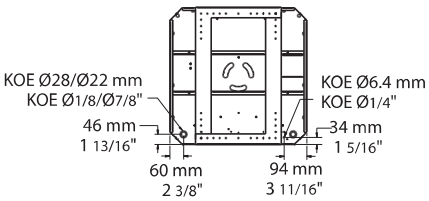

ODSR - Recessed
2-5kW, 31 lbs (14.1 kg)

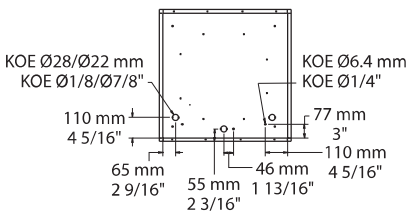

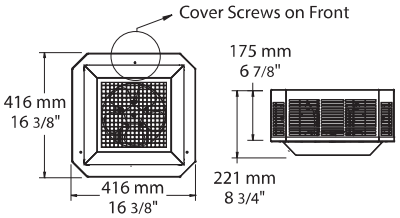

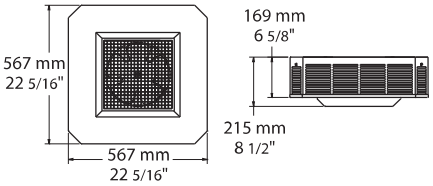

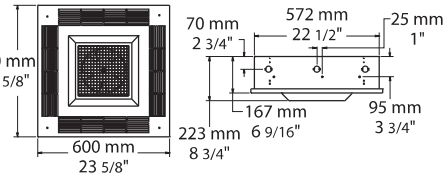

Section 3.7.4

Exhaust Fan

Section 3.7.4.1

Exhaust Fan – Explosion Proof



FRONT VIEW

EXPLOSION PROOF STANDARD WALL EXHAUST FANS

Efficient, low maintenance and easy to install.

Canarm LFI's explosion proof fans follow a tradition of quality in design, materials and construction. Using our quality "Standard Fan" housing and motor mount as the basis for design, we have developed an efficient, economically priced Explosion Proof Fan. All Explosion Proof Fans have a single speed, dual voltage explosion proof motor that meets and conforms to all the standards that are listed below.

CLASS I, GROUP C *Atmospheres containing ethyl ether, ethylene, gases or vapors of equivalent hazard.*

CLASS I, GROUP D *Atmospheres such as acetone, ammonia, benzene, butane, cyclopropane, ethanol, gasoline, hexane, methane, natural gas, naphtha, propane, or gasses or vapors of equivalent hazard.*

CLASS II GROUP F *Atmospheres containing carbonaceous dust, including carbon black, charcoal, coal, or coke dusts that have more than 8% total entrapped volatiles, or dusts that have been sensitized by other materials so that they present an explosion hazard.*

CLASS II GROUP G *Atmospheres containing combustible dusts not included in group E or F, including flour, grain, wood, plastic and chemicals.*

FEATURES

- Totally enclosed, ball bearing motor with thermal overload protection.
- The fan blades are well-balanced, heavy gauge aluminum.
- The rugged steel welded box housing has a durable powder coated finish.
- Aluminum louver shutters are supported by long life nylon bushings.
- Heavy wire chrome plated OSHA guards on intake side of fan.
- All fans are shipped completely assembled.

DIMENSIONS

FAN SIZE	A X A SQUARE	B	C	D c/c	E	N
8"	13 1/4"	17 1/2"	4"	12"	10 3/4"	2
10"	15 1/4"	17 1/2"	4"	14"	12 3/4"	2
12"	17 1/4"	20 1/2"	6"	16"	14 3/4"	3
18"	23 1/4"	20 1/2"	6"	22"	20 3/4"	4
24"	29 1/4"	20 1/2"	6"	28"	26 3/4"	5

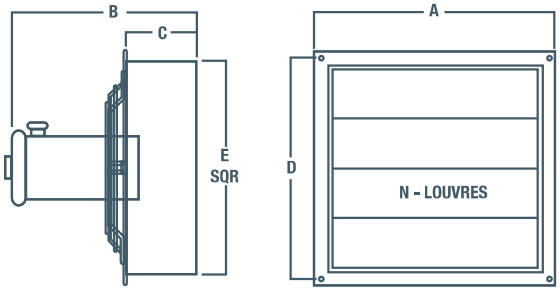

4 MOUNTING HOLES
.375" DIAMETER

SPECIFICATIONS

MODEL	FAN SIZE	HP	VOLTS	AMPS	SPEED	RPM	AIRFLOW CAPACITY - CFM				FRAMING DIMENSIONS	WEIGHT (LBS)
							0" SP	.05" SP	.10" SP	.25" SP		
NEW SD08-XPF	8"	1/3	115/230	6.6/3.3	Single	1625	320	280	240	-	11" X 11"	38
NEW SD10-XPF	10"	1/3	115/230	6.6/3.3	Single	1625	620	575	530	-	13" X 13"	39
SD12-XPF	12"	1/3	115/230	6.6/3.3	Single	1625	1,640	1,600	1,540	1,390	15" x 15"	42
SD18-XPF	18"	1/3	115/230	6.6/3.3	Single	1625	3,200	3,150	3,090	2,920	21" x 21"	60
SD24-XPF	24"	1/3	115/230	6.6/3.3	Single	1625	5,500	5,400	5,310	5,100	27" x 27"	72

NOTE: RPM Min (Minimum) is determined when louvres are opened one inch.
Note: Wind has a significant effect on exhaust fans. A 10 mph wind creates a 0.05" pressure against the fan. A 20 mph wind creates 0.20" pressure and 30 mph a 0.45" pressure. These pressures are in addition to the static pressure in the building. Wind blocks or hoods should be included in all designs where fans will be subjected to winds above 10 mph.



BACK VIEW

ACCESSORIES

- Hoods

For a complete listing of all available hoods, see page D11.

STANDARD EXHAUST FANS

CANARM®

OPERATION INSTRUCTIONS AND PARTS MANUAL

READ AND SAVE THESE INSTRUCTIONS

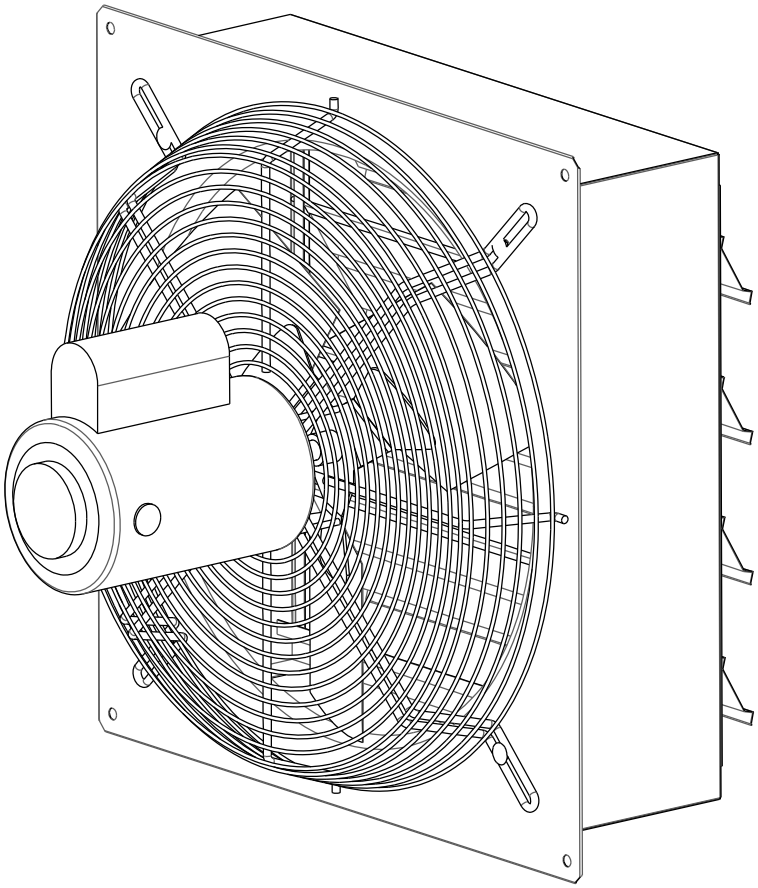

WARRANTY

CANARM Ltd. warrants every new fan to be free of defects in material and workmanship, to the extent that, within a period of one year from the date of purchase CANARM Ltd. shall either repair or replace at CANARM's option, any unit or part thereof, returned freight prepaid, and found to be defective.

This warranty does not include any labour or transportation costs incidental to the removal and reinstallation of the unit at the user's premises. Components repaired or replaced are warranted through the remainder of the original warranty period only.

This warranty applies to the original purchaser-user only; it is null and void in case of alteration, accident, abuse, neglect, and operation not in accordance with instructions.

NOTICE: No warranty claims will be honored by CANARM Ltd. unless prior authorization is obtained.

INSTALLATION OR PRODUCT PROBLEMS? DO NOT RETURN TO STORE OF PURCHASE.
CONTACT CANARM SERVICE AT 1-800-265-1833 (CANADA) 1-800-267-4427 (U.S.A.)
1-800-567-2513 (EN FRANCAIS) MONDAY TO FRIDAY 8:00 - 5:00PM E.S.T.

INSTRUCTION MANUAL FOR STANDARD EXHAUST FANS

READ INSTRUCTIONS COMPLETELY BEFORE INSTALLATION & SAVE FOR REFERENCE

Congratulations on the purchase of your quality built direct drive, wall exhaust ventilation fan. All of these models use totally enclosed motors with thermal over load protection. Variable speed motors are high efficiency motors which save on electrical costs and can be run as a single speed motor. The motors are mounted on heavy gauge welded steel rod motor mounts that have a Bright Zinc finish. Fans come fully assembled and 100% of fans are tested for proper operation before shipping.

THESE ARE GENERAL INSTRUCTIONS WHICH COVER OUR SINGLE, VARIABLE AND TWO SPEED STANDARD FANS, AS WELL AS OUR SINGLE SPEED EXPLOSION PROOF MODELS..

STANDARD FANS:

These models have a rugged, welded steel box housing with a powder coated finish and aluminum or plastic exhaust louvers that are supported by long life nylon bushings. The louvers open automatically when the fan starts up and close when the fan stops

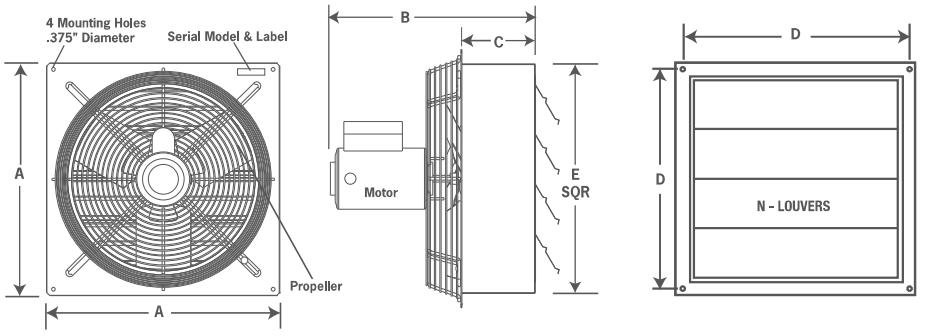

Fan Size	A	B	C	D (c/c)	E	N	Framing
8"	13 1/4"	11"	4"	12"	10 3/4"	2	11 X 11
10"	15 1/4"	11"	4"	14"	12 3/4"	2	13 X 13
12"	17 1/4"	17"	6"	16"	14 3/4"	3	15 X 15
14"	19 1/4"	17"	6"	18"	16 3/4"	3	17 X 17
16"	21 1/4"	17"	6"	20"	18 3/4"	4	19 X 19
18"	23 1/4"	15"	6"	22"	20 3/4"	4	21 X 21
20"	25 1/4"	18"	6"	24"	22 3/4"	5	23 X 23
24"	29 1/4"	18"	6"	28"	26 3/4"	5	27 X 27
30"	35 1/4"	19"	6"	34"	32 3/4"	16	33 X 33
36"	41 1/4"	18"	6"	40"	38 3/4"	20	39 X 39
42"	47 1/4"	18"	6 3/4"	46"	44 3/4"	24	45 X 45
48"	53 1/4"	19"	6 3/4"	52"	50 5/8"	26	51 X 51

EXPLOSION PROOF FANS:

Explosion proof fans are equipped with single speed explosion proof motors and aluminum blades so sparks cannot occur if a metal object obstructs the blade path. Explosion proof fans have the same quality welded steel box housing and heavy gauge welded guard as the standard fans. These fans should be used to ventilate hazardous areas. Locations are considered hazardous if the atmosphere contains or may contain gas, vapor, or dust in explosive quantities.

THE MOTOR AMBIENT TEMPERATURE IS NOT TO EXCEED +40°C OR -25°C UNLESS THE MOTOR NAMEPLATE SPECIFICALLY PERMITS ANOTHER VALUE. THE FOLLOWING TABLE INDICATES WHICH HAZARDOUS CLASSIFICATIONS CANARM EXPLOSION PROOF FANS DO AND DO NOT MEET.

Canarm explosion proof fans DO meet the following hazardous classifications.

CLASS 1, DIVISION 1 (GASES, VAPORS)

GROUP C Acetaldehyde, cyclopropane, diethlether, Ethylene, isoprene

GROUP D Acetone, acrylonitrile, ammonia, benzene, butane, ethylene dichloride, gasoline, hexane, methane, methanol, naphtha, propane, propylene styrene, toluene, vinyl, acetate, vinyl chloride, xylene

CLASS 2, DIVISION 1 (COMBUSTIBLE DUSTS)

GROUP F Carbon black, coke or coal dust

GROUP G Flour, starch or graindust

Canarm explosion proof fans DO NOT meet the following hazardous classifications.

CLASS 1, DIVISION 1 (GASES, VAPORS)

GROUP A Acetylene

GROUP B Butadiene, ethylene oxide, hydrogen, propylene oxide

CLASS 2, DIVISION 1 (COMBUSTIBLE DUSTS)

GROUP E Aluminum, magnesium and other metal dusts with similar characteristics

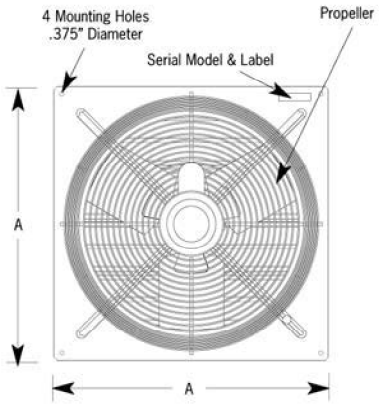

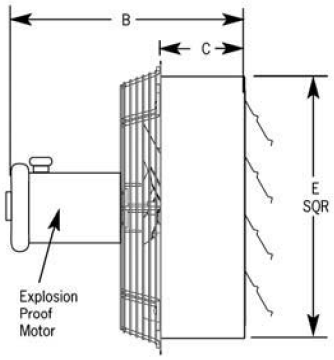

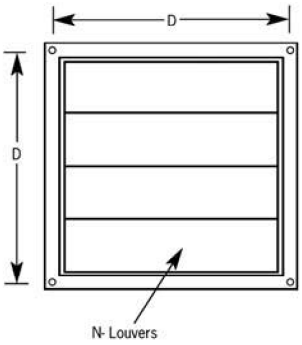

Fan Size	A	B	C	D (c/c)	E	N	Framing
12"	17 1/4"	17"	6"	16"	14 3/4"	3	15 X 15
18"	23 1/4"	15"	6"	22"	20 3/4"	4	21 X 21
24"	29 1/4"	18"	6"	28"	26 3/4"	5	27 X 27

INSTALLATION

Installation is fast and simple. A sturdy framed wall opening should be prepared in advance to the size indicated for your fan in the charts above. With lag bolts for wooden frames or nut, bolt and lock washers for steel frames, secure the fan using the four mounting holes provided, one in each corner of the fan.

ELECTRICAL CONNECTIONS



WARNING: BE SURE POWER IS OFF AT THE ELECTRICAL PANEL BEFORE WIRING.

WARNING: ALL ELECTRICAL WORK SHOULD BE PERFORMED BY A QUALIFIED ELECTRICIAN.

These fans are supplied with single, two or variable speed motors. Single and two speed motors are 120V only. Variable speed motors are dual voltage. All dual voltage motors are pre-wired at 240V in our factory. Rewire motor as per motor nameplate if running fan at 120V. Please see the motor nameplate for wiring diagram. Make electrical connections in motor connection box as per the motor nameplate. Follow ***Chart #1*** for wire sizes. Two speed fans require a two speed control or 3 position toggle switch to change from high/ low/off. See wiring diagram with control for 2 speed wiring instructions.

CHART#1

Table A **Minimum Wire Sizes for Three-Phase Motors**

Motor HP	25 to 50 Feet			100 Feet			150 to 200 Feet		
	200V	230V	460V	200V	230V	460V	200V	230V	460V
1/8	14(18)*	14(18)*	14(18)*	14(18)*	14(18)*	14(18)*	14(16)*	14(16)*	14(18)*
1/6	14(18)*	14(18)*	14(18)*	14(18)*	14(18)*	14(18)*	14	14(16)*	14(18)*
1/4	14(18)*	14(18)*	14(18)*	14(16)*	14(18)*	14(18)*	14	14	14(18)*
1/3	14(18)*	14(18)*	14(18)*	14(16)*	14(16)*	14(18)*	12	14	14(18)*
1/2	14(16)*	14(18)*	14(18)*	12	14(16)*	14(18)*	10	12	14(18)*
3/4	14(16)*	14(16)*	14(18)*	12	14	14(18)*	10	10	14(16)*
1	14	14(16)*	14(18)*	12	12	14(18)*	8	10	14(16)*
1 1/2	12	14	14(18)*	10	10	14(16)*	6	8	14
2	12	12	14(18)*	8	10	14(16)*	6	6	12
3	10	12	14(18)*	6	8	14	4	6	12

Table B **Minimum Wire Sizes for Single-Phase Motors**

Motor HP	25 to 50 Feet			100 Feet			150 to 200 Feet		
	200V	230V	460V	200V	230V	460V	200V	230V	460V
1/8	14(18)*	14(18)*	14	14(18)*	12	14(18)*	10	8	14
1/6	14(16)*	14(18)*	12	14(18)*	10	14(18)*	6	6	12
1/4	14	14(18)*	10	14(16)*	6	14	6	4	10
1/3	14	14(18)*	10	14(16)*	8	14	6	4	10
1/2	12	14(18)*	8	14	6	12	4	3	8
3/4	10	14(16)*	6	12	4	10	2	1	6
1	10	14(16)*	6	12	4	10	2	1	6
1 1/2	8	14	6	12	3	8	1	1/0	6
2	6	14	4	10	2	8	1/0	2/0	4
3	6	12	3	8	1/0	6	2/0	4/0	3

NOTE:
- NEC Article 310-5 - *Minimum conductor size for general wiring at 115-440VAC is number 14AWG.
- Above wire sizes based on approximate 5% voltage drop during starting: copper conductors: and 75°C type THHW, THW, THWN, RH, RHW insulation etc. For aluminum wire, increase two wire size steps minimum. See NEC Article 310 for ampacities of aluminum conductors.
- Type S, SO, SJ, SJO, etc. flexible cable wire sizes. See NEC article 400 for ampacity.

OPERATION

WARNING: VARIABLE SPEED FANS SHOULD HAVE THE MINIMUM SPEED SET TO OPEN LOUVERS AT LEAST ONE INCH FOR PROPER MOTOR COOLING AND TO PREVENT MOTOR FAILURE.

All fans are direct drive. Fans with variable speed motors can be operated as an energy efficient single speed fan or in variable operation with the proper controller. As mentioned above two speed fans require a two speed control or 3 position toggle switch to change from high speed to low and off.



WARNING: GUARDING SHOULD BE USED IF FANS ARE MOUNTED LOWER THAN SEVEN FEET (2 METRES) OFF FLOOR OR GROUND LEVEL.

ACCESSORIES

Canarm provides a complete line of manual and thermostatic controls. Canarm also offers wall mount exhaust shutter kits, replacement shutter sets, and weather protection hoods.

MAINTENANCE

MOTORS ARE EQUIPPED WITH AUTOMATIC OVERLOAD PROTECTION AND MAY RESTART WITHOUT WARNING. ALWAYS DISCONNECT FROM POWER BEFORE ATTEMPTING SERVICE. Motor, blade and louvers should be kept clean of any buildup to prevent premature motor failure and to achieve proper performance. Automatic louvers should be kept operating freely. As with all mechanical equipment scheduled inspections should include checking that all hardware is secure and blade set screws are tight.

WARRANTY

CANARM Ltd. warrants every new fan to be free of defects in material and workmanship, to the extent that, within a period of one year from the date of purchase CANARM Ltd. shall either repair or replace at CANARM's option, any unit or part thereof, returned freight prepaid, and found to be defective. This warranty does not include any labour or transportation costs incidental to the removal and reinstallation of the unit at the user's premises. Components repaired or replaced are warranted through the remainder of the original warranty period only. This warranty applies to the original purchaser-user only; it is null and void in case of alteration, accident, abuse, neglect, and operation not in accordance with instructions.
NOTICE: NO WARRANTY CLAIMS WILL BE HONORED BY CANARM LTD. UNLESS PRIOR AUTHORIZATION IS OBTAINED.

CANARM®

CANARM LTD.
2157 PARKEDALE AVE. PO BOX 367
BROCKVILLE, ONTARIO K6V 5V6
TELEPHONE: (613) 342-5424
FAX: 1-800-263-4598

CANARM LTEE.
2555 RUE BERNARD LEFEBVRE
LAVAL, QUEBEC H7C 0A5
TELEPHONE: (450) 665-2535
FAX: (450) 665-0910

ARTHUR MANUFACTURING FACILITY
#7686 CONCESSION 16, RR4
ARTHUR, ONTARIO N0G 1A0
TELEPHONE: (519) 848-3910
FAX: (519) 848-3948

Section 3.7.4.2

Exhaust Fan – Nonexplosion Proof

Now Available with EC motors!
See Green Products for more info

SD - STANDARD WALL EXHAUST FANS

Efficient, low maintenance and easy to install.



8" & 10" MODELS FRONT VIEW



8" & 10" MODELS BACK VIEW



12" to 24" MODELS FRONT VIEW

Intertek



30", 36", 42" & 48" MODELS WITH PVC LOUVERS



12" to 48" MODELS BACK VIEW

Canarm/LFI's standard fans follow a tradition of quality in design, materials and construction. All our standard fans are developed to be efficient and economically priced. Fans are available in single, two and variable speed models. All variable speed standard fans use an energy efficient variable speed, dual voltage motor and blade combination. To determine the proper Canarm/LFI fan for your applications, use the formula and table shown on back of page.

FEATURES

8" & 10" Models *New Features!*

- Smooth, quiet, reliable, maintenance-free operation
- Durable steel construction with grey powder coat finish
- 2 speed fan with high efficiency Euro design external rotor motor
  - Totally enclosed with sealed ball bearings
  - Pull chain speed control
  - 9 foot cord with 115 volt, 3-prong plug
- Swept back, high efficiency, low noise blade design
- Quiet, aluminum shutters with tie bar to maximize airflow and a magnet to prevent flapping and provide a superior seal
- Zinc plated OSHA guard
- Fans shipped completely assembled
- Easy to install! Mount fan using four screws, plug it in and turn it on

12" to 48" Models

- Single, two and variable speed models are available.
- All fans use a totally enclosed, thermally protected motor.
- Rugged steel welded box housing has a durable powder coated finish.
- Aluminum louver shutters are supported by long life nylon bushings (30", 36", 42" & 48" have PVC louvers).
- 12" - 24" models have heavy wire chrome plated OSHA guards on intake side of fan.
  30", 36", 42" & 48" models have grey powder coated guards.
- All fans are shipped completely assembled.



SPECIFICATIONS

	MODEL	SPEED	BLADE DIAMETER	RPM	HP	VOLTAGE	AMPS (FLA)	WEIGHT (LBS)	dB(A) @5 ft	CFM @ STATIC PRESSURE				FRAMING DIMENSIONS
										0.00"	0.10"	0.125"	0.25"	
NEW	**SD08**	Two	8"	1600/1300	25W	115	0.2	13	48	360/292	270/150	230/110	--	11" X 11"
NEW	**SD10**	Two	10"	1480/1150	60W	115	0.5	15	55	500/388	420/300	400/250	--	13" X 13"
	S12-E1	Single	12"	1625	1/4	115	2.7	28	63	1640	1540	1510	1390	15" X 15"
	S12-E2	Two	12"	1725/1140	1/4	115	3.4	32	64	1650/1090	1550/950	1520/930	1390/0	15" X 15"
	S12-EVD	Variable	12"	1625	1/3	115/230	5.0/2.5	32	60	1650	1540	1510	1390	15" X 15"
	S14-E1	Single	14"	1625	1/4	115	2.7	30	67	2170	2070	2030	1860	17" X 17"
	S14-E2	Two	14"	1725/1140	1/4	115	3.4	34	65	2180/1350	2080/1190	2060/1160	1890/0	17" X 17"
	S16-E1	Single	16"	1625	1/4	115	2.7	33	68	2370	2270	2210	2060	19" X 19"
	S16-E2	Two	16"	1725/1140	1/4	115	3.4	36	69	2380/1640	2280/1490	2230/1430	2070/0	19" X 19"
	S16-EVD	Variable	16"	1625	1/3	115/230	5.0/2.5	36	63	2370	2270	2210	2063	19" X 19"
	S18-F1	Single	18"	1625	1/3	115	4.1	37	73	3200	3090	3040	2920	21" X 21"
	S18-F2	Two	18"	1725/1140	1/3	115	5.5/2.9	43	74	3200/2100	3090/1890	3040/1820	2920/0	21" X 21"
	S18-FVD	Variable	18"	1625	1/3	115/230	3.8/1.9	45	74	3150	3050	2980	2860	21" X 21"
	S20-F1	Single	20"	1625	1/3	115	4.1	41	77	3420	3220	3170	2920	23" X 23"
	S20-F2	Two	20"	1725/1140	1/3	115	5.5/2.9	45	77	3440/2300	3240/2000	3180/1950	2930/0	23" X 23"
	SD24-F1	Single	24"	1100	1/3	115	3.6	46	70	5000	4500	4300	3600	27" X 27"
	SD24-GVD	Variable	24"	1075	1/3	115/230	4.4/2.2	56	72	5050	4910	4810	4400	27" X 27"
	SD30-G1D	Single	30"	1075	1/3	115/230	4.4/2.2	72	82	8000	7000	6000	5000	33" X 33"
	SD36-G1D	Single	36"	850	1/2	115/230	6.6/3.3	88	72	10000	8500	8000	6200	39" X 39"
NEW	**SD42-H1D**	Single	42"	850	1	230	5	122	83	14900	13550	13210	10800	45" X 45"
NEW	**SD48-H1D**	Single	48"	850	1	230	5.0	140	84	17200	15300	14800	12500	51" X 51"

Some models are available with explosion proof motors. Please see next page.

NOTE: RPM Min (Minimum) is determined when louvres are opened one inch.
Note: Wind has a significant effect on exhaust fans. A 10 mph wind creates a 0.05" pressure against the fan. A 20 mph wind creates 0.20" pressure and 30 mph a 0.45" pressure. These pressures are in addition to the static pressure in the building. Wind blocks or hoods should be included in all designs where fans will be subjected to winds above 10 mph.

AIR CHANGES PER MINUTE

To determine the proper Canarm/LFI fan for your applications, use the following formula.
Number of cubic feet in room / Number of minutes per air change = Required C.F.M. Capacity

EXAMPLE: A general office, (see chart) which requires an air change every ten minutes, would require the following fan capacity.
If office is 100' x 40' x 10' = 40,000 cubic ft; 40,000 cubic ft / 10 minutes per air change = 4000 Required C.F.M.
From the chart, you would select a fan that is rated at 4000 C.F.M. at 1/8" S.P. (Static Pressure)

Application	Minutes per Air Change	Application	Minutes per Air Change	Application	Minutes per Air Change	Application	Minutes per Air Change
Assembly Hall	7	Church	15	Foundry	4	Pressing Room	1
Attic	2	Classroom	6	Garage	5	Projection Booth	2
Auditorium	10	Dance Hall	5	General Office	10	Summer Cooling	1
Barber Shop	6	Department Store	6	Gymnasium	8	Toilet	3
Basement	8	Dry Cleaning	5	Laundry	2	Transformer Room	1
Battery Room	4	Engine Room	6	Locker Room	3	Warehouse	12
Boiler Room	1	Factory	6	Machine Shop	8	Welding Shop	2
Bowling Alley	5	Forge Room	3	Plating Room	3		

DIMENSIONS

8" & 10" Models

FAN SIZE	A	B	C	D (c/c)	E SQR	N
8"	13 1/4"	7 9/16"	4"	12"	10 3/4"	2
10"	15 1/4"	7 7/8"	4"	14"	12 3/4"	3

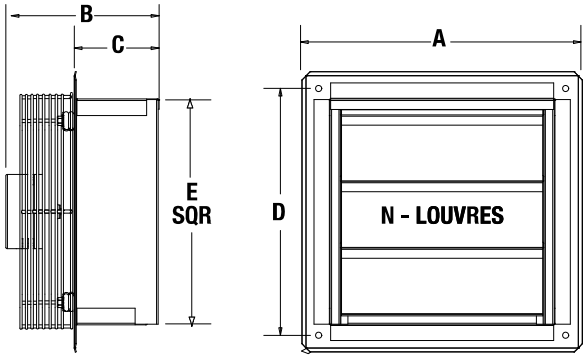

12" to 48" Models

	FAN SIZE	A X A SQUARE	B	C	D (c/c)	E	N
	12"	17 1/4"	17"	6"	16"	14 3/4"	3
	14"	19 1/4"	17"	6"	18"	16 3/4"	3
	16"	21 1/4"	17"	6"	20"	18 3/4"	4
	18"	23 1/4"	18"	6"	22"	20 3/4"	4
	20"	25 1/4"	18"	6 3/4"	24"	22 3/4"	5
	24"	29 1/4"	18"	6 3/4"	28"	26 3/4"	5
	30"	35 1/4"	18"	6"	34"	32 3/4"	16
	36"	41 1/4"	18"	6"	40"	38 3/4"	20
NEW	42"	47 1/4"	18"	6 3/4"	46"	44 3/4"	24
NEW	48"	53 1/4"	19"	6 3/4"	52"	50 5/8"	26

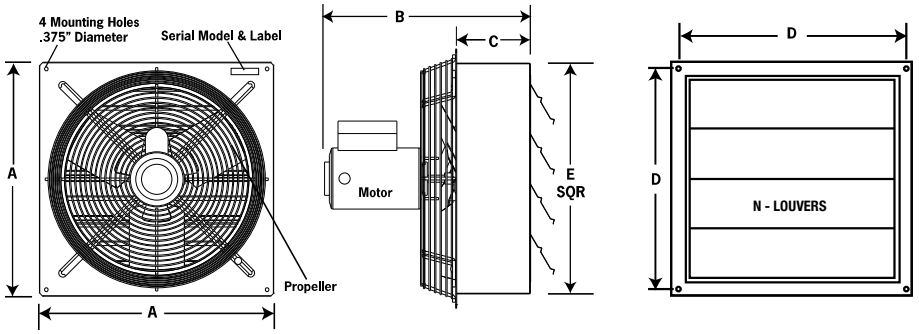

ACCESSORIES

- Grey plastic weather hood
- Galvanized metal hood
- MC type & wet locations controls.

For a complete listing on all available accessories, see page D17.
For a complete listing of all available hoods, see page D11.
For all available control options, see Controls & Thermostats tab.

STANDARD EXHAUST FANS

CANARM®

OPERATION INSTRUCTIONS AND PARTS MANUAL

READ AND SAVE THESE INSTRUCTIONS

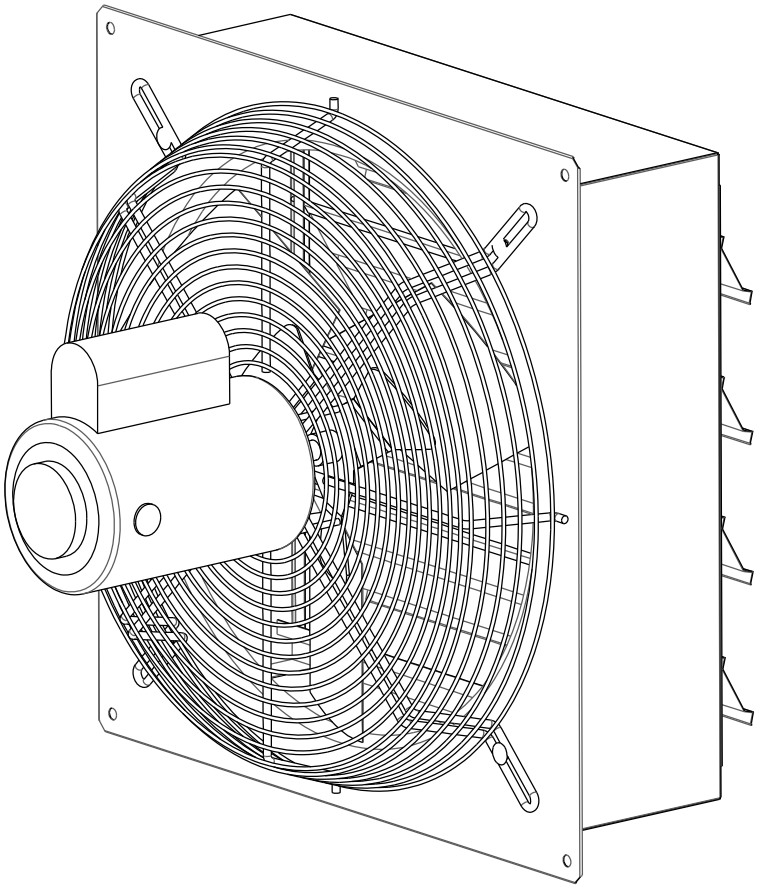

WARRANTY

CANARM Ltd. warrants every new fan to be free of defects in material and workmanship, to the extent that, within a period of one year from the date of purchase CANARM Ltd. shall either repair or replace at CANARM's option, any unit or part thereof, returned freight prepaid, and found to be defective.

This warranty does not include any labour or transportation costs incidental to the removal and reinstallation of the unit at the user's premises. Components repaired or replaced are warranted through the remainder of the original warranty period only.

This warranty applies to the original purchaser-user only; it is null and void in case of alteration, accident, abuse, neglect, and operation not in accordance with instructions.

NOTICE: No warranty claims will be honored by CANARM Ltd. unless prior authorization is obtained.

INSTALLATION OR PRODUCT PROBLEMS? DO NOT RETURN TO STORE OF PURCHASE.
CONTACT CANARM SERVICE AT 1-800-265-1833 (CANADA) 1-800-267-4427 (U.S.A.)
1-800-567-2513 (EN FRANCAIS) MONDAY TO FRIDAY 8:00 - 5:00PM E.S.T.

INSTRUCTION MANUAL FOR STANDARD EXHAUST FANS

READ INSTRUCTIONS COMPLETELY BEFORE INSTALLATION & SAVE FOR REFERENCE

Congratulations on the purchase of your quality built direct drive, wall exhaust ventilation fan. All of these models use totally enclosed motors with thermal over load protection. Variable speed motors are high efficiency motors which save on electrical costs and can be run as a single speed motor. The motors are mounted on heavy gauge welded steel rod motor mounts that have a Bright Zinc finish. Fans come fully assembled and 100% of fans are tested for proper operation before shipping.

THESE ARE GENERAL INSTRUCTIONS WHICH COVER OUR SINGLE, VARIABLE AND TWO SPEED STANDARD FANS, AS WELL AS OUR SINGLE SPEED EXPLOSION PROOF MODELS..

STANDARD FANS:

These models have a rugged, welded steel box housing with a powder coated finish and aluminum or plastic exhaust louvers that are supported by long life nylon bushings. The louvers open automatically when the fan starts up and close when the fan stops

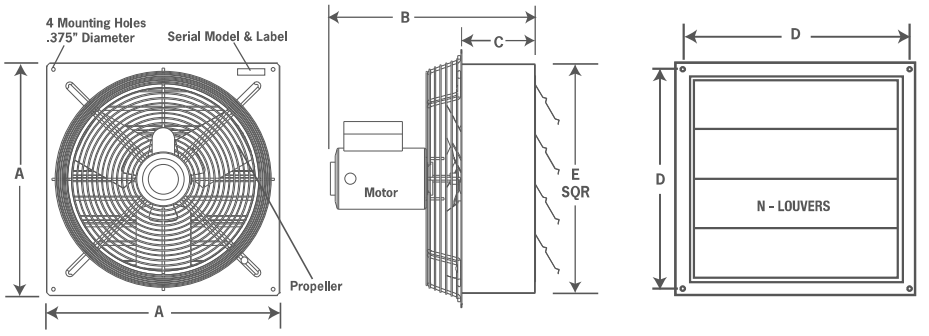

Fan Size	A	B	C	D (c/c)	E	N	Framing
8"	13 1/4"	11"	4"	12"	10 3/4"	2	11 X 11
10"	15 1/4"	11"	4"	14"	12 3/4"	2	13 X 13
12"	17 1/4"	17"	6"	16"	14 3/4"	3	15 X 15
14"	19 1/4"	17"	6"	18"	16 3/4"	3	17 X 17
16"	21 1/4"	17"	6"	20"	18 3/4"	4	19 X 19
18"	23 1/4"	15"	6"	22"	20 3/4"	4	21 X 21
20"	25 1/4"	18"	6"	24"	22 3/4"	5	23 X 23
24"	29 1/4"	18"	6"	28"	26 3/4"	5	27 X 27
30"	35 1/4"	19"	6"	34"	32 3/4"	16	33 X 33
36"	41 1/4"	18"	6"	40"	38 3/4"	20	39 X 39
42"	47 1/4"	18"	6 3/4"	46"	44 3/4"	24	45 X 45
48"	53 1/4"	19"	6 3/4"	52"	50 5/8"	26	51 X 51

EXPLOSION PROOF FANS:

Explosion proof fans are equipped with single speed explosion proof motors and aluminum blades so sparks cannot occur if a metal object obstructs the blade path. Explosion proof fans have the same quality welded steel box housing and heavy gauge welded guard as the standard fans. These fans should be used to ventilate hazardous areas. Locations are considered hazardous if the atmosphere contains or may contain gas, vapor, or dust in explosive quantities.

THE MOTOR AMBIENT TEMPERATURE IS NOT TO EXCEED +40°C OR -25°C UNLESS THE MOTOR NAMEPLATE SPECIFICALLY PERMITS ANOTHER VALUE. THE FOLLOWING TABLE INDICATES WHICH HAZARDOUS CLASSIFICATIONS CANARM EXPLOSION PROOF FANS DO AND DO NOT MEET.

Canarm explosion proof fans DO meet the following hazardous classifications.

CLASS 1, DIVISION 1 (GASES, VAPORS)

GROUP C Acetaldehyde, cyclopropane, diethlether, Ethylene, isoprene

GROUP D Acetone, acrylonitrile, ammonia, benzene, butane, ethylene dichloride, gasoline, hexane, methane, methanol, naphtha, propane, propylene styrene, toluene, vinyl, acetate, vinyl chloride, xylene

CLASS 2, DIVISION 1 (COMBUSTIBLE DUSTS)

GROUP F Carbon black, coke or coal dust

GROUP G Flour, starch or graindust

Canarm explosion proof fans DO NOT meet the following hazardous classifications.

CLASS 1, DIVISION 1 (GASES, VAPORS)

GROUP A Acetylene

GROUP B Butadiene, ethylene oxide, hydrogen, propylene oxide

CLASS 2, DIVISION 1 (COMBUSTIBLE DUSTS)

GROUP E Aluminum, magnesium and other metal dusts with similar characteristics

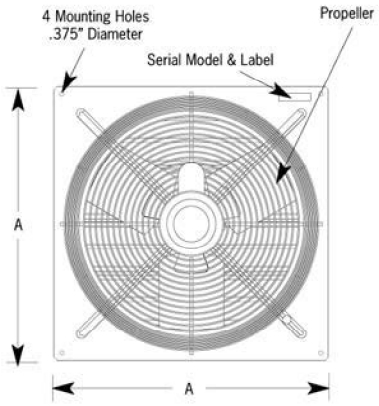

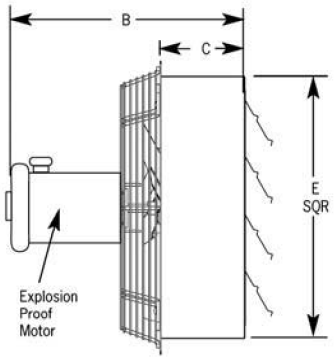

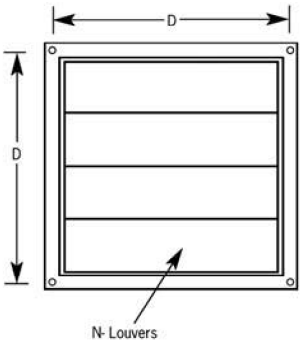

Fan Size	A	B	C	D (c/c)	E	N	Framing
12"	17 1/4"	17"	6"	16"	14 3/4"	3	15 X 15
18"	23 1/4"	15"	6"	22"	20 3/4"	4	21 X 21
24"	29 1/4"	18"	6"	28"	26 3/4"	5	27 X 27

INSTALLATION

Installation is fast and simple. A sturdy framed wall opening should be prepared in advance to the size indicated for your fan in the charts above. With lag bolts for wooden frames or nut, bolt and lock washers for steel frames, secure the fan using the four mounting holes provided, one in each corner of the fan.

ELECTRICAL CONNECTIONS



WARNING: BE SURE POWER IS OFF AT THE ELECTRICAL PANEL BEFORE WIRING.

WARNING: ALL ELECTRICAL WORK SHOULD BE PERFORMED BY A QUALIFIED ELECTRICIAN.

These fans are supplied with single, two or variable speed motors. Single and two speed motors are 120V only. Variable speed motors are dual voltage. All dual voltage motors are pre-wired at 240V in our factory. Rewire motor as per motor nameplate if running fan at 120V. Please see the motor nameplate for wiring diagram. Make electrical connections in motor connection box as per the motor nameplate. Follow ***Chart #1*** for wire sizes. Two speed fans require a two speed control or 3 position toggle switch to change from high/ low/off. See wiring diagram with control for 2 speed wiring instructions.

CHART#1

Table A **Minimum Wire Sizes for Three-Phase Motors**

Motor HP	25 to 50 Feet			100 Feet			150 to 200 Feet		
	200V	230V	460V	200V	230V	460V	200V	230V	460V
1/8	14(18)*	14(18)*	14(18)*	14(18)*	14(18)*	14(18)*	14(16)*	14(16)*	14(18)*
1/6	14(18)*	14(18)*	14(18)*	14(18)*	14(18)*	14(18)*	14	14(16)*	14(18)*
1/4	14(18)*	14(18)*	14(18)*	14(16)*	14(18)*	14(18)*	14	14	14(18)*
1/3	14(18)*	14(18)*	14(18)*	14(16)*	14(16)*	14(18)*	12	14	14(18)*
1/2	14(16)*	14(18)*	14(18)*	12	14(16)*	14(18)*	10	12	14(18)*
3/4	14(16)*	14(16)*	14(18)*	12	14	14(18)*	10	10	14(16)*
1	14	14(16)*	14(18)*	12	12	14(18)*	8	10	14(16)*
1 1/2	12	14	14(18)*	10	10	14(16)*	6	8	14
2	12	12	14(18)*	8	10	14(16)*	6	6	12
3	10	12	14(18)*	6	8	14	4	6	12

Table B **Minimum Wire Sizes for Single-Phase Motors**

Motor HP	25 to 50 Feet			100 Feet			150 to 200 Feet		
	200V	230V	460V	200V	230V	460V	200V	230V	460V
1/8	14(18)*	14(18)*	14	14(18)*	12	14(18)*	10	8	14
1/6	14(16)*	14(18)*	12	14(18)*	10	14(18)*	6	6	12
1/4	14	14(18)*	10	14(16)*	6	14	6	4	10
1/3	14	14(18)*	10	14(16)*	8	14	6	4	10
1/2	12	14(18)*	8	14	6	12	4	3	8
3/4	10	14(16)*	6	12	4	10	2	1	6
1	10	14(16)*	6	12	4	10	2	1	6
1 1/2	8	14	6	12	3	8	1	1/0	6
2	6	14	4	10	2	8	1/0	2/0	4
3	6	12	3	8	1/0	6	2/0	4/0	3

NOTE:
- NEC Article 310-5 - *Minimum conductor size for general wiring at 115-440VAC is number 14AWG.
- Above wire sizes based on approximate 5% voltage drop during starting: copper conductors: and 75°C type THHW, THW, THWN, RH, RHW insulation etc. For aluminum wire, increase two wire size steps minimum. See NEC Article 310 for ampacities of aluminum conductors.
- Type S, SO, SJ, SJO, etc. flexible cable wire sizes. See NEC article 400 for ampacity.

OPERATION

WARNING: VARIABLE SPEED FANS SHOULD HAVE THE MINIMUM SPEED SET TO OPEN LOUVERS AT LEAST ONE INCH FOR PROPER MOTOR COOLING AND TO PREVENT MOTOR FAILURE.

All fans are direct drive. Fans with variable speed motors can be operated as an energy efficient single speed fan or in variable operation with the proper controller. As mentioned above two speed fans require a two speed control or 3 position toggle switch to change from high speed to low and off.



WARNING: GUARDING SHOULD BE USED IF FANS ARE MOUNTED LOWER THAN SEVEN FEET (2 METRES) OFF FLOOR OR GROUND LEVEL.

ACCESSORIES

Canarm provides a complete line of manual and thermostatic controls. Canarm also offers wall mount exhaust shutter kits, replacement shutter sets, and weather protection hoods.

MAINTENANCE

MOTORS ARE EQUIPPED WITH AUTOMATIC OVERLOAD PROTECTION AND MAY RESTART WITHOUT WARNING. ALWAYS DISCONNECT FROM POWER BEFORE ATTEMPTING SERVICE. Motor, blade and louvers should be kept clean of any buildup to prevent premature motor failure and to achieve proper performance. Automatic louvers should be kept operating freely. As with all mechanical equipment scheduled inspections should include checking that all hardware is secure and blade set screws are tight.

WARRANTY

CANARM Ltd. warrants every new fan to be free of defects in material and workmanship, to the extent that, within a period of one year from the date of purchase CANARM Ltd. shall either repair or replace at CANARM's option, any unit or part thereof, returned freight prepaid, and found to be defective. This warranty does not include any labour or transportation costs incidental to the removal and reinstallation of the unit at the user's premises. Components repaired or replaced are warranted through the remainder of the original warranty period only. This warranty applies to the original purchaser-user only; it is null and void in case of alteration, accident, abuse, neglect, and operation not in accordance with instructions.
NOTICE: NO WARRANTY CLAIMS WILL BE HONORED BY CANARM LTD. UNLESS PRIOR AUTHORIZATION IS OBTAINED.

CANARM®

CANARM LTD.
2157 PARKEDALE AVE. PO BOX 367
BROCKVILLE, ONTARIO K6V 5V6
TELEPHONE: (613) 342-5424
FAX: 1-800-263-4598

CANARM LTEE.
2555 RUE BERNARD LEFEBVRE
LAVAL, QUEBEC H7C 0A5
TELEPHONE: (450) 665-2535
FAX: (450) 665-0910

ARTHUR MANUFACTURING FACILITY
#7686 CONCESSION 16, RR4
ARTHUR, ONTARIO N0G 1A0
TELEPHONE: (519) 848-3910
FAX: (519) 848-3948

Section 3.7.5

Louver & Dampeners

Section 3.7.5.1

Louver & Dampener - Explosion Proof

VENTEX *Inc.*

LOUVERS & DAMPERS

2220 & 2225 2 INCH EXTRUDED ALUMINIUM STORMPROOF STATIONARY LOUVER

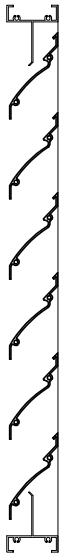

Channel Frame



Extended Sill

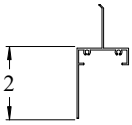

Flange Frame

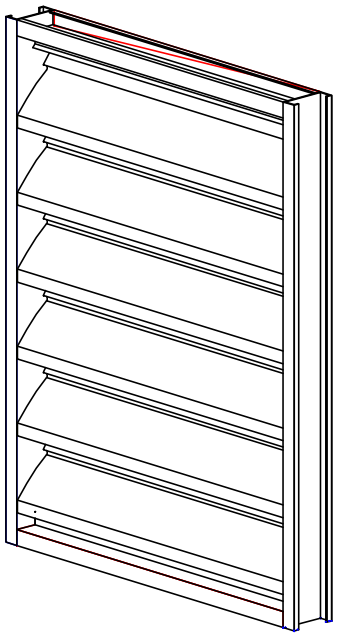

Quantity	Ref. #	Width (W)*	Height (H)*	Frame	Accessories

PROJECT NAME:	**ENGINEER:**
CONTRACTOR:	**SUBMITTAL DATE:**

STANDARD CONSTRUCTION

Depth: 2 Inches (50 mm)
Frame Style: Specify 2220 For Channel Frame
Specify 2225 For Flange Frame
Frame Thickness: 0.062" 6063-T5 Extruded Aluminium
Blade Thickness: 0.062" 6063-T5 Extruded Aluminium
Blade Centres: 3 Inches (76 mm)
Blade Angle: 45 Degrees
Minimum Height: 6 Inches (152 mm)
Maximum Panel Width: 72 Inches (1828 mm)
Maximum Panel Height: 72 Inches (1828 mm)
Standard Finish: Mill
Standard Birdscreen: ½" x ½" Galvanized
Free Area of 48" x 48" Unit: 7.22 Sq. ft. Free Area
0.671 m2
Free Area Percentage: 45.1 Percent

*Louver will be manufactured ¼" smaller than given opening dimensions, unless otherwise specified.

AVAILABLE ACCESSORIES

Bird Screen: ¼ x ¼ Inter Crimped Aluminium
½ x ½ Inter Crimped Aluminium
Insect Screen: 18 x 14 Mesh

Finish: Mill Finish (Standard)
Paint Color #: V
Anodized Finish: Clear Light Bronze
Medium Bronze Dark Bronze

Accessories: Aluminium Blank Off Panel
1" or 2" Insulated Blank Off Panel
Hinged Frame
All Welded Construction
Hinged Frame and Access Door
Security Bars
Extended Sills
Extended Sleeves
Filter Racks
Custom Geometric Shapes

Model 2220 and 2225
2" Extruded Aluminium Stormproof Louver
Free Area in Square Feet

		WIDTH IN INCHES															
	Inches	12	16	20	24	28	32	36	40	44	48	52	56	60	64	68	72
	12	0.29	0.40	0.50	0.61	0.72	0.82	0.93	1.04	1.15	1.25	1.36	1.47	1.57	1.68	1.79	1.90
	16	0.43	0.59	0.75	0.91	1.07	1.23	1.39	1.55	1.71	1.87	2.03	2.20	2.36	2.52	2.68	2.84
H	20	0.61	0.84	1.07	1.30	1.53	1.76	1.99	2.21	2.44	2.67	2.90	3.13	3.36	3.59	3.81	4.04
	24	0.75	1.03	1.31	1.58	1.86	2.14	2.42	2.70	2.98	3.25	3.53	3.81	4.09	4.37	4.65	4.93
E	28	0.90	1.23	1.56	1.90	2.23	2.56	2.90	3.23	3.56	3.90	4.23	4.56	4.90	5.23	5.56	5.90
	32	1.05	1.45	1.84	2.23	2.63	3.02	3.41	3.80	4.20	4.59	4.98	5.37	5.77	6.16	6.55	6.94
I	36	1.21	1.66	2.11	2.56	3.01	3.46	3.91	4.36	4.81	5.26	5.71	6.16	6.61	7.06	7.51	7.96
	40	1.35	1.86	2.36	2.87	3.37	3.88	4.38	4.88	5.39	5.89	6.40	6.90	7.40	7.91	8.41	8.92
G	44	1.52	2.08	2.64	3.21	3.77	4.33	4.90	5.46	6.02	6.59	7.15	7.72	8.28	8.84	9.41	9.97
	48	1.66	2.28	2.90	3.51	4.13	4.75	5.37	5.98	6.60	7.22	7.84	8.45	9.07	9.69	10.31	10.93
H	52	1.82	2.49	3.17	3.84	4.52	5.19	5.87	6.54	7.22	7.89	8.57	9.24	9.92	10.59	11.27	11.95
	56	1.98	2.71	3.45	4.18	4.92	5.66	6.39	7.13	7.86	8.60	9.34	10.07	10.81	11.54	12.28	13.01
T	60	2.13	2.92	3.72	4.51	5.30	6.09	6.89	7.68	8.47	9.26	10.06	10.85	11.64	12.43	13.23	14.02
	64	2.28	3.12	3.97	4.81	5.66	6.51	7.35	8.20	9.05	9.89	10.74	11.59	12.43	13.28	14.13	14.97
	68	2.44	3.34	4.25	5.15	6.06	6.97	7.87	8.78	9.68	10.59	11.50	12.40	13.31	14.22	15.12	16.03
	72	2.59	3.55	4.52	5.48	6.44	7.41	8.37	9.33	10.30	11.26	12.22	13.19	14.15	15.11	16.08	17.04

Model 2220 and 2225
2" Extruded Aluminium Stormproof Louver
Percentage Of Free Area

		WIDTH IN INCHES															
		12	16	20	24	28	32	36	40	44	48	52	56	60	64	68	72
	12	28.8%	29.6%	30.1%	30.5%	30.7%	30.9%	31.0%	31.2%	31.2%	31.3%	31.4%	31.4%	31.5%	31.5%	31.6%	31.6%
	16	32.3%	33.3%	33.8%	34.2%	34.5%	34.7%	34.8%	35.0%	35.1%	35.1%	35.2%	35.3%	35.3%	35.4%	35.4%	35.5%
H	20	36.9%	37.9%	38.6%	39.0%	39.3%	39.5%	39.7%	39.8%	40.0%	40.1%	40.1%	40.2%	40.3%	40.3%	40.4%	40.4%
	24	37.4%	38.5%	39.2%	39.6%	39.9%	40.1%	40.3%	40.5%	40.6%	40.7%	40.8%	40.8%	40.9%	41.0%	41.0%	41.0%
E	28	38.4%	39.5%	40.2%	40.6%	40.9%	41.2%	41.4%	41.5%	41.6%	41.7%	41.8%	41.9%	42.0%	42.0%	42.1%	42.1%
	32	39.6%	40.7%	41.4%	41.9%	42.2%	42.4%	42.6%	42.8%	42.9%	43.0%	43.1%	43.2%	43.2%	43.3%	43.4%	43.4%
I	36	40.3%	41.5%	42.2%	42.6%	43.0%	43.2%	43.4%	43.6%	43.7%	43.8%	43.9%	44.0%	44.0%	44.1%	44.2%	44.2%
	40	40.6%	41.8%	42.5%	43.0%	43.3%	43.6%	43.8%	44.0%	44.1%	44.2%	44.3%	44.4%	44.4%	44.5%	44.5%	44.6%
G	44	41.3%	42.5%	43.2%	43.7%	44.1%	44.3%	44.5%	44.7%	44.8%	44.9%	45.0%	45.1%	45.2%	45.2%	45.3%	45.3%
	48	41.5%	42.7%	43.4%	43.9%	44.3%	44.5%	44.7%	44.9%	45.0%	45.1%	45.2%	45.3%	45.4%	45.4%	45.5%	45.5%
H	52	41.9%	43.1%	43.8%	44.3%	44.7%	44.9%	45.1%	45.3%	45.4%	45.5%	45.6%	45.7%	45.8%	45.8%	45.9%	45.9%
	56	42.4%	43.6%	44.3%	44.8%	45.2%	45.5%	45.7%	45.8%	46.0%	46.1%	46.2%	46.2%	46.3%	46.4%	46.4%	46.5%
T	60	42.6%	43.8%	44.6%	45.1%	45.4%	45.7%	45.9%	46.1%	46.2%	46.3%	46.4%	46.5%	46.6%	46.6%	46.7%	46.7%
	64	42.7%	43.9%	44.6%	45.1%	45.5%	45.8%	46.0%	46.1%	46.3%	46.4%	46.5%	46.6%	46.6%	46.7%	46.7%	46.8%
	68	43.0%	44.2%	45.0%	45.5%	45.8%	46.1%	46.3%	46.5%	46.6%	46.7%	46.8%	46.9%	47.0%	47.0%	47.1%	47.1%
	72	43.2%	44.4%	45.2%	45.7%	46.0%	46.3%	46.5%	46.7%	46.8%	46.9%	47.0%	47.1%	47.2%	47.2%	47.3%	47.3%

Maximum Recommended Intake CFM
Maximum Intake Velocity 400 FPM

		WIDTH IN INCHES															
		12	16	20	24	28	32	36	40	44	48	52	56	60	64	68	72
	12	115	158	201	244	287	330	373	415	458	501	544	587	630	673	716	758
	16	172	237	301	365	429	493	557	622	686	750	814	878	942	1006	1071	1135
H	20	246	337	428	520	611	703	794	886	977	1068	1160	1251	1343	1434	1525	1617
	24	299	411	522	634	745	856	968	1079	1191	1302	1413	1525	1636	1748	1859	1970
E	28	358	492	625	758	892	1025	1158	1292	1425	1558	1692	1825	1958	2092	2225	2358
	32	422	579	736	893	1050	1207	1364	1521	1678	1835	1992	2149	2306	2463	2620	2777
I	36	484	663	843	1023	1203	1383	1563	1743	1923	2103	2283	2463	2643	2823	3002	3182
	40	542	744	945	1147	1349	1550	1752	1954	2155	2357	2559	2760	2962	3164	3365	3567
G	44	606	831	1057	1282	1508	1733	1959	2184	2410	2635	2861	3086	3312	3537	3763	3988
	48	664	911	1158	1405	1652	1899	2146	2394	2641	2888	3135	3382	3629	3876	4123	4370
H	52	726	996	1266	1536	1807	2077	2347	2617	2887	3157	3427	3698	3968	4238	4508	4778
	56	791	1085	1380	1674	1968	2263	2557	2851	3146	3440	3734	4029	4323	4617	4912	5206
T	60	852	1169	1486	1803	2120	2437	2754	3071	3388	3705	4023	4340	4657	4974	5291	5608
	64	910	1249	1587	1926	2265	2603	2942	3281	3619	3958	4296	4635	4974	5312	5651	5990
	68	974	1337	1699	2062	2424	2786	3149	3511	3874	4236	4599	4961	5324	5686	6049	6411
	72	1036	1421	1807	2192	2577	2963	3348	3733	4119	4504	4890	5275	5660	6046	6431	6817

Recommended Specification

Furnish and install stationary louver models 2220 / 2225 as manufactured by Ventex, Bolton Ontario. Louvers shall be 2 inches (50.8 mm) deep. Blades shall be 0.062 Inches (1.57 mm), frame shall be 0.062 (1.57 mm) extruded aluminium, alloy 6063-T5.

Louvers shall have a 19 guage galvanized 1/2 x 1/2 birdscreen. All materials shall be factory finished after assembly with Polyester Baking Enamel in a color selected from the Ventex Color Chart.

ALUMAVENT
CONTROL DAMPERS & FIRE DAMPERS

4100 SERIES
STEEL CONTROL DAMPERS
MODEL 4100 • LOW LEAKAGE

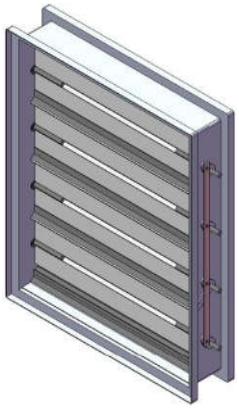

PARALLEL BLADE (PB)

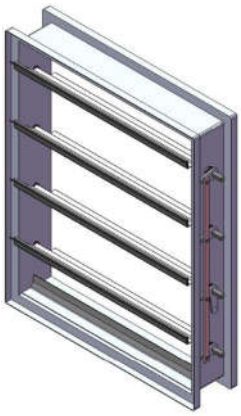

OPPOSED BLADE (OB)

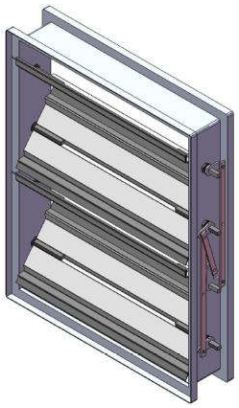

4100 Low Leakage Steel Control Damper

STANDARD CONSTRUCTION

Frame Depth: 5" *(127 mm)*
Depth (blades open): 6 3/8" *(162 mm)*
Frame Thickness: 16 Ga. galvanized steel
Blade Thickness: 16 Ga. galvanized steel
Blade Seals: Co-extruded Santoprene vinyl
Jamb Seals: Stainless steel compression spring
Bearings: Oilite self-lubricating bronze
Axles: 3/8" square polycarbonate
Frame Style: Hat channel for in-duct mount
Minimum Height: 8" *(203 mm)* Single blade
14" *(356 mm)* Multiple blade
Maximum Panel Width: 48" *(1219 mm)*
Maximum Panel Height: 72" *(1829 mm)*
Maximum System Pressure: 5" w.g. for 12" (*305 mm)* wide damper
Leakage: Does not exceed 10 CFM/ft^2 (50.8 L/s/m^2) against 4" w.g *(1 kPa)* differential static pressure at -40° F
Linkage: Concealed in frame
Standard Finish: Mill galvanized
Standard Motor Installation: Side shaft direct drive (extendable up to 8")
Temperature Range: -40°F to +180°F (-40C to +82C)

AVAILABLE ACCESSORIES

- Factory supplied actuators
- Stainless Steel axle bearings
- Jack Shafts
- Hand Quadrants
- Chain Operator for manual operation, spring closed

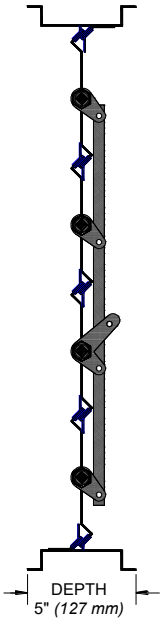

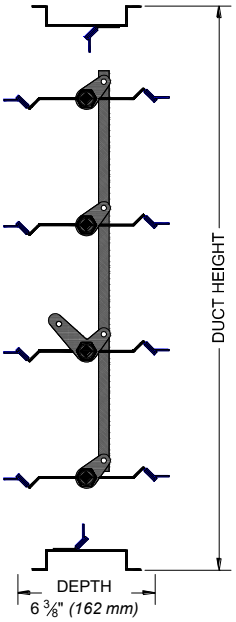

REF. #	QTY.	DUCT WIDTH	DUCT HEIGHT	PB/OB	FRAME	ACCESSORIES

*DAMPER WILL BE MANUFACTURED A MINIMUM OF ¼" (*6 mm*) SMALLER THAN GIVEN DUCT DIMENSIONS, UNLESS OTHERWISE SPECIFIED.

PROJECT NAME:		**ENGINEER:**	
CONTRACTOR:		**SUBMITTAL DATE:**	

195 HEALEY ROAD | BOLTON, ON. L7E 5B2 | TEL (905) 857-4700 | FAX (905) 857-4730 | 1-800-668-7214 | *www.ventexinc.com*

LF120 (-S) US / LF230 (-S) US

On-off, spring return failsafe, 120/230 VAC



Torque min. 35 in-lb, for control of air dampers

Application

For on-off, fail-safe control of dampers in HVAC systems. Actuator sizing should be done in accordance with the damper manufacturer's specifications. Control is on-off from an auxiliary contact, or a manual switch.

The actuator is mounted directly to a damper shaft from 3/8" up to 1/2" in diameter by means of its universal clamp, 1/2" shaft centered at delivery. For shafts up to 3/4" use K6-1 accessory. A crank arm and several mounting brackets are available for applications where the actuator cannot be direct coupled to the damper shaft.

Operation

The LF series actuators provide true spring return operation for reliable fail-safe application and positive close off on air tight dampers. The spring return system provides consistent torque to the damper with, and without, power applied to the actuator. The LF series provides 95° of rotation and is provided with a graduated position indicator showing 0° to 95°.
The actuator may be stalled anywhere in its normal rotation without the need of mechanical end switches. Power consumption is reduced in holding mode. The actuator is double insulated so an electrical ground connection is not necessary.

The LF120-S US and LF230-S US versions are provided with 1 built-in auxiliary switch. This SPDT switch is provided for safety interfacing or signaling, for example, for fan start-up. The switching function is adjustable between 0° and 95°.

Technical Data	LF120 (-S) US	LF230 (-S) US
Power supply	120 VAC ± 10% 50/60 Hz	230 VAC ± 10% 50/60 Hz
Power consumption	running: 5.5 W holding: 3.5 W	5 W 3 W
Transformer sizing	7.5 VA	7 VA
Electrical connection	3 ft, 18 GA appliance cable (-S models have 2 cables) 1/2" conduit connector	
Overload protection	electronic throughout 0 to 95° rotation	
Electrical protection	actuators are double insulated	
Angle of rotation	max 95°, adjust. with mechanical stop	
Torque	35 in-lb [4 Nm] constant torque	
Direction of rotation	reversible with cw/ccw mounting	
Position indication	visual indicator, 0° to 95° (0° is spring return position)	
Auxiliary switch (-S models)	1 x SPDT 6A (1.5A) @ 250 VAC, UL listed adjustable 0° to 95°	
Electrical protection	actuators are double insulated	
Running time (nominal)	motor: < 40 to 75 sec spring: < 25 sec @-4°F to +122°F [-20°C to +50°C] < 60 sec @-22°F [-30°C]	
Humidity	5 to 95% RH non-condensing	
Ambient temperature	-22°F to +122°F [-30°C to +50°C]	
Storage temperature	-40°F to +176°F [-40°C to +80°C]	
Housing	NEMA type 2 / IP54	
Housing material	zinc coated steel	
Agency listings	UL 873, CSA C22.2 No. 24 Certified, CE [LF230(-S) US]	
Noise level	max: running < 50 db (A) spring return 62 dB (A)	
Servicing	maintenance free	
Quality standard	ISO 9001	
Weight	LF120/230 3.4 lbs (1.54 kg.) LF120/230-S 3.5 lbs (1.60 kg.)	

Dimensions [All numbers in brackets are in millimeters.]

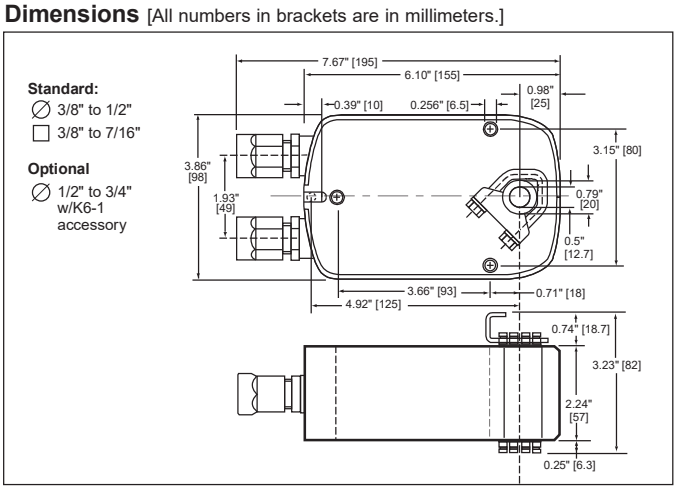

G20492-IG-Subject to change. © Belimo Aircontrols (USA), Inc.

D010

Accessories

AV 10-18	Shaft extension (K6-1 is required)
IND-LF	Damper position indicator
K6-1	Universal clamp for up to 3/4" diameter shafts
KH-LF	Crankarm for up to 1/2" round shaft
Tool-06	8mm and 10 mm wrench
ZG-LF2	Crankarm adaptor kit for LF
ZG-112	Mounting bracket for Honeywell Mod IV, M6415 type actuators, and new installations
ZG-LF112	Crankarm adaptor kit for Honeywell Mod IV, M6415 type actuators, and new installations
ZS-100	Weather shield (metal)
ZS-150	Weather shield (polycarbonate)
ZS-260	Explosion-proof housing

Note: When using LF120/230 US and LF120-S/230-S US actuators, only use accessories listed on this page.

LF120 (-S) US / LF230 (-S) US Typical Specification

On-off spring return damper actuators shall be direct coupled type which require no crankarm and linkage and be capable of direct mounting to a shaft up to a 3/4" diameter and center a 1/2" shaft. The actuators must be designed so that they may be used for either clockwise or counterclockwise fail-safe operation. Actuators shall be protected from overload at all angles of rotation. If required, 1 SPDT auxiliary switch shall be provided having the capability of being adjustable. Actuators must be constructed to meet the requirements for Double Insulation so an electrical ground is not required to meet agency listings. Actuators shall be UL listed and CSA certified, have a 5 year warranty, and be manufactured under ISO 9001 International Quality Control Standards. Actuators shall be as manufactured by Belimo.

Wiring diagrams

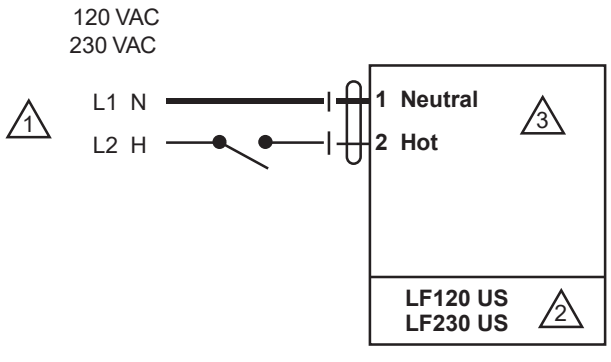

1 Provide overload protection and disconnect as required.

2 Actuators may be connected in parallel. Power consumption must be observed.

3 No ground connection is required.

On-off wiring for LF120 US / LF230 US

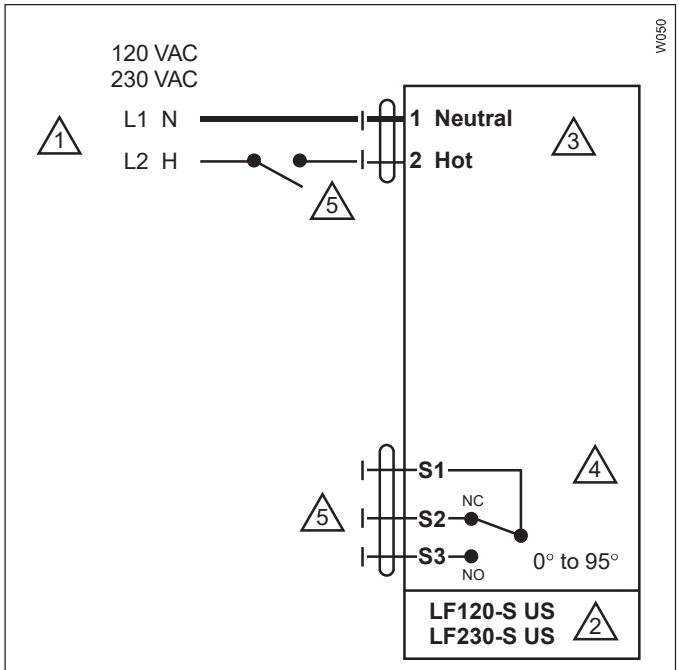

1 Provide overload protection and disconnect as required.

2 Actuators may be connected in parallel. Power consumption must be observed.

3 No ground connection is required.

4 For end position indication, interlock control, fan start-up, etc., LF120-S US and LF230-S US incorporate one built-in auxiliary switch: 1 x SPDT, 6A (1.5A) @250 VAC, UL listed, adjustable 0° to 95°.

5 Meets UL and CSA requirements without the need of an electrical ground connection.

On-off wiring for LF120-S US / LF230-S US

G20492-Subject to change. © Belimo Aircontrols (USA), Inc.

BELIMO

Protective Housing ZS-260
For GK, GM, AM, AF, NF, NK, LF FSAF, FSNF, FSLF Series Acutators



Application

The ZS-260 explosion-proof housing may be used with the GK, GM, AM, AF, NF, NK, LF, FSAF, FSNF, FSLF series actuators. This housing is not designed for direct coupling. UL and CSA; Class I, Zone 1&2, Groups B, C, D, (NEMA 7), Class II, Division 1&2, Groups E, F and G, (NEMA 9), Class III, Hazardous (classified) Locations, outdoor application NEMA 4.

Operation

The ZS-260 enclosure is designed so that the required actuator may be easily field mounted into the enclosure. The actuator is fastened on to the internal portion of the operating shaft and secured at the end with an anti-rotation strap. A crank-arm, such as the KH8, is mounted to the external portion of the operating shaft for connection to connection to the damper linkage. ZG-109 right angle, and ZG-110 standoff mounting brackets may be used (see back).

The ZS-260 is designed so that the operating shaft can be mounted on either the front or rear side of the housing.

Accessories

KH8	Universal crankarm
KG8	Universal ball joint
KG10	Universal ball joint
ZG-109	Right angle mounting bracket
ZG-110	Stand-off mounting bracket

Technical Data	
Material	Housing: cast, copper-free, aluminum Cover bolts: stainless steel Operating shaft: stainless steel
Conduit Holes	¾"–14 NPT (2 supplied) see Note 1
Operating Shaft Diameter	1/2 inch [12.7]
Operating Shaft Location	Front or rear side of housing (field selected)
Housing Cover Bolts	3/8"-16 x 1.5" SS
Approved Applications	UL and CSA; Class I, Zone 1&2, Groups B, C, D, (NEMA 7), Class II, Zone 1&2, Groups E, F and G, (NEMA 9), Class III, Hazardous (classified) Locations, outdoor application NEMA 4.
Weight	31.0 lb. (14.0 kg) without actuator

Note 1: Fittings that meet the requirements of the hazardous location must be used. All applications must comply with applicable local and/or national electric code.

Note: Since conditions of use of this product are outside the control of Belimo, the purchaser should determine suitability of the product for their intended use, and assumes all risk and liability in connection therewith.

Dimensions (All ratings in brackets are metric.)

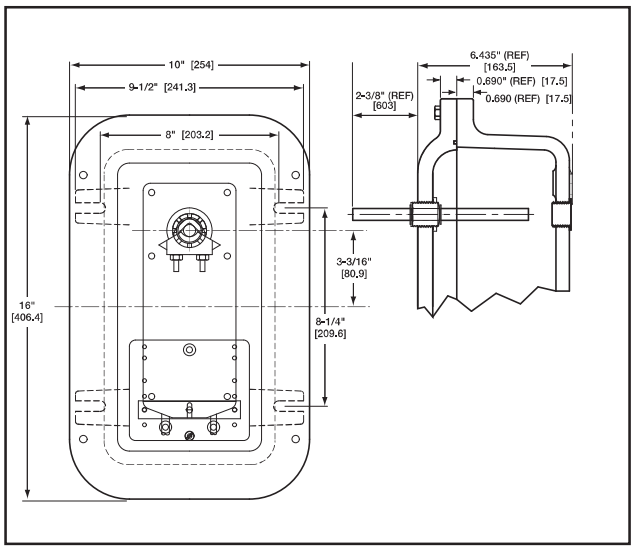

Subject to change. © Belimo Aircontrols (USA), Inc.

Protective Housing ZS-260
Mounting Instructions

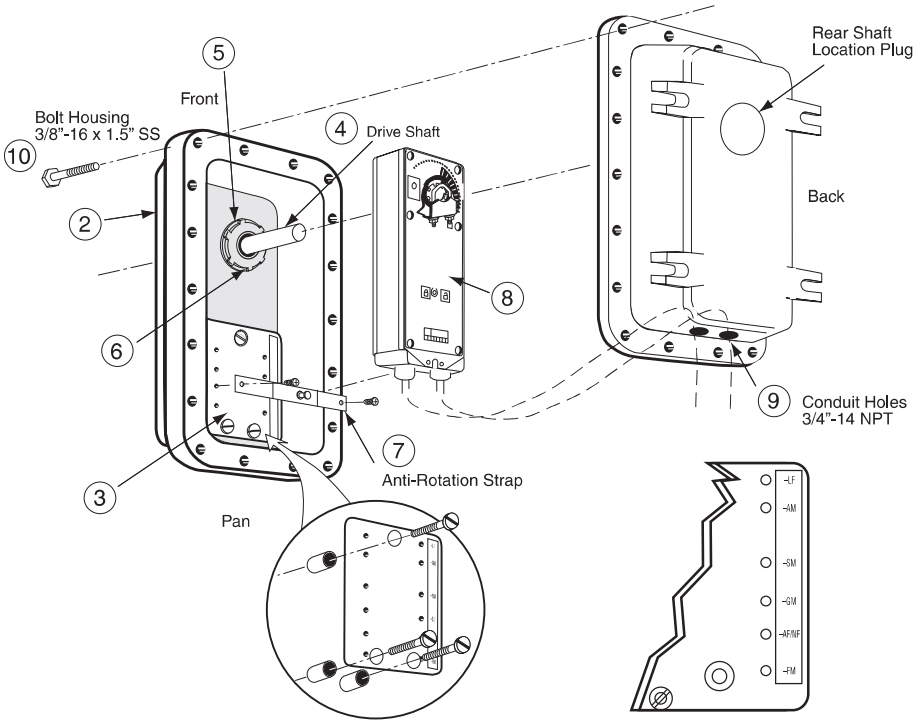

ZS-260 Mounting Instructions

1. Determine proper operating shaft location.
2. Remove threaded plug from the hole in which the operating shaft will be mounted.
3. Install the anti-rotation strap, mounting plate, to the side of the housing where the operating shaft will be mounted.
4. From the inside surface of the housing, insert the operating shaft, short length first, into the mounting hole.
5. Hand tighten the shaft bushing into the housing until the star nut/seal is in contact with the face of the housing.
6. Using a screw driver blade, drive the star nut/seal clockwise until the bushing is locked into place.
7. Install the anti-rotation strap into the mounting plate at the designated holes for the actuator to be used.
8. Install actuator.
9. Wire actuator (per electrical code).
10. Bolt housing together.

Typical ZG-109 Mounting

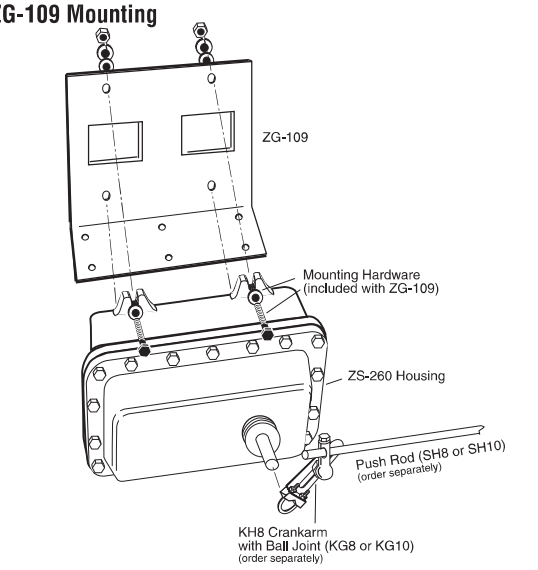

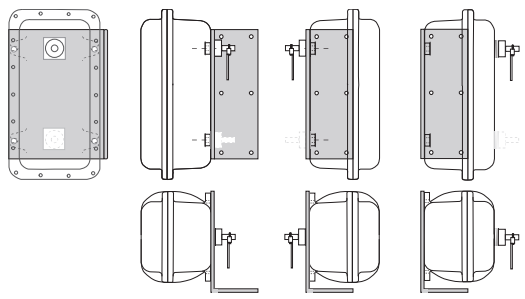

Typical ZG-110 Mounting

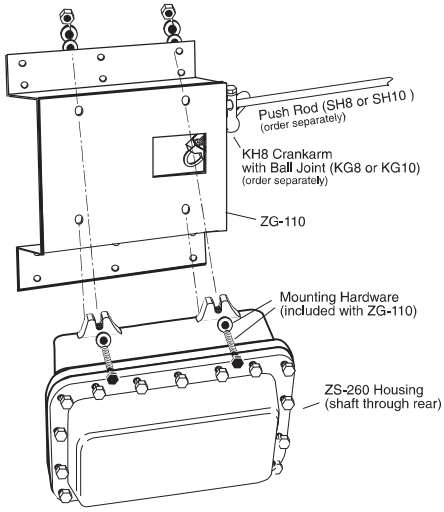

Typical Mounting Sequence

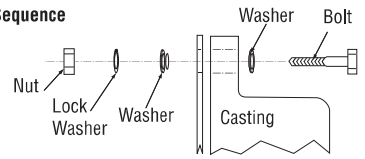

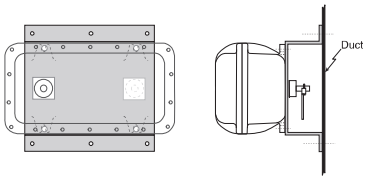

Subject to change. © Belimo Aircontrols (USA), Inc.

Section 3.7.5.2

Louver & Dampener - Non-Explosion Proof

VENTEX *Inc.*

LOUVERS & DAMPERS

2220 & 2225 2 INCH EXTRUDED ALUMINIUM STORMPROOF STATIONARY LOUVER

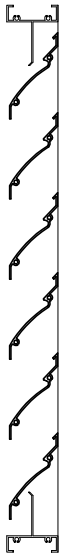

Channel Frame



Extended Sill

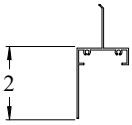

Flange Frame

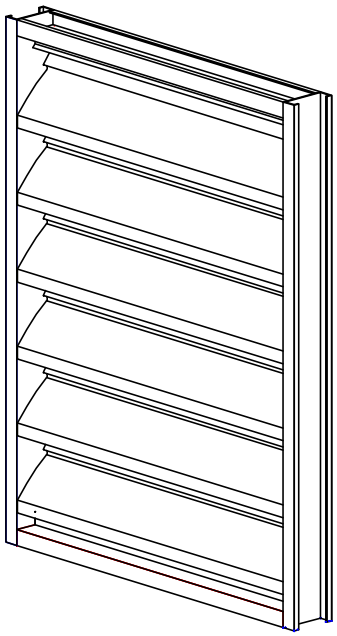

Quantity	Ref. #	Width (W)*	Height (H)*	Frame	Accessories

PROJECT NAME:	**ENGINEER:**
CONTRACTOR:	**SUBMITTAL DATE:**

STANDARD CONSTRUCTION

Depth: 2 Inches (50 mm)
Frame Style: Specify 2220 For Channel Frame
Specify 2225 For Flange Frame
Frame Thickness: 0.062" 6063-T5 Extruded Aluminium
Blade Thickness: 0.062" 6063-T5 Extruded Aluminium
Blade Centres: 3 Inches (76 mm)
Blade Angle: 45 Degrees
Minimum Height: 6 Inches (152 mm)
Maximum Panel Width: 72 Inches (1828 mm)
Maximum Panel Height: 72 Inches (1828 mm)
Standard Finish: Mill
Standard Birdscreen: ½" x ½" Galvanized
Free Area of 48" x 48" Unit: 7.22 Sq. ft. Free Area
0.671 m2
Free Area Percentage: 45.1 Percent

*Louver will be manufactured ¼" smaller than given opening dimensions, unless otherwise specified.

AVAILABLE ACCESSORIES

Bird Screen: ¼ x ¼ Inter Crimped Aluminium
½ x ½ Inter Crimped Aluminium
Insect Screen: 18 x 14 Mesh

Finish: Mill Finish (Standard)
Paint Color #: V
Anodized Finish: Clear Light Bronze
Medium Bronze Dark Bronze

Accessories: Aluminium Blank Off Panel
1" or 2" Insulated Blank Off Panel
Hinged Frame
All Welded Construction
Hinged Frame and Access Door
Security Bars
Extended Sills
Extended Sleeves
Filter Racks
Custom Geometric Shapes

Model 2220 and 2225
2" Extruded Aluminium Stormproof Louver
Free Area in Square Feet

		WIDTH IN INCHES															
	Inches	12	16	20	24	28	32	36	40	44	48	52	56	60	64	68	72
	12	0.29	0.40	0.50	0.61	0.72	0.82	0.93	1.04	1.15	1.25	1.36	1.47	1.57	1.68	1.79	1.90
	16	0.43	0.59	0.75	0.91	1.07	1.23	1.39	1.55	1.71	1.87	2.03	2.20	2.36	2.52	2.68	2.84
H	20	0.61	0.84	1.07	1.30	1.53	1.76	1.99	2.21	2.44	2.67	2.90	3.13	3.36	3.59	3.81	4.04
	24	0.75	1.03	1.31	1.58	1.86	2.14	2.42	2.70	2.98	3.25	3.53	3.81	4.09	4.37	4.65	4.93
E	28	0.90	1.23	1.56	1.90	2.23	2.56	2.90	3.23	3.56	3.90	4.23	4.56	4.90	5.23	5.56	5.90
	32	1.05	1.45	1.84	2.23	2.63	3.02	3.41	3.80	4.20	4.59	4.98	5.37	5.77	6.16	6.55	6.94
I	36	1.21	1.66	2.11	2.56	3.01	3.46	3.91	4.36	4.81	5.26	5.71	6.16	6.61	7.06	7.51	7.96
	40	1.35	1.86	2.36	2.87	3.37	3.88	4.38	4.88	5.39	5.89	6.40	6.90	7.40	7.91	8.41	8.92
G	44	1.52	2.08	2.64	3.21	3.77	4.33	4.90	5.46	6.02	6.59	7.15	7.72	8.28	8.84	9.41	9.97
	48	1.66	2.28	2.90	3.51	4.13	4.75	5.37	5.98	6.60	7.22	7.84	8.45	9.07	9.69	10.31	10.93
H	52	1.82	2.49	3.17	3.84	4.52	5.19	5.87	6.54	7.22	7.89	8.57	9.24	9.92	10.59	11.27	11.95
	56	1.98	2.71	3.45	4.18	4.92	5.66	6.39	7.13	7.86	8.60	9.34	10.07	10.81	11.54	12.28	13.01
T	60	2.13	2.92	3.72	4.51	5.30	6.09	6.89	7.68	8.47	9.26	10.06	10.85	11.64	12.43	13.23	14.02
	64	2.28	3.12	3.97	4.81	5.66	6.51	7.35	8.20	9.05	9.89	10.74	11.59	12.43	13.28	14.13	14.97
	68	2.44	3.34	4.25	5.15	6.06	6.97	7.87	8.78	9.68	10.59	11.50	12.40	13.31	14.22	15.12	16.03
	72	2.59	3.55	4.52	5.48	6.44	7.41	8.37	9.33	10.30	11.26	12.22	13.19	14.15	15.11	16.08	17.04

Model 2220 and 2225
2" Extruded Aluminium Stormproof Louver
Percentage Of Free Area

		WIDTH IN INCHES															
		12	16	20	24	28	32	36	40	44	48	52	56	60	64	68	72
	12	28.8%	29.6%	30.1%	30.5%	30.7%	30.9%	31.0%	31.2%	31.2%	31.3%	31.4%	31.4%	31.5%	31.5%	31.6%	31.6%
	16	32.3%	33.3%	33.8%	34.2%	34.5%	34.7%	34.8%	35.0%	35.1%	35.1%	35.2%	35.3%	35.3%	35.4%	35.4%	35.5%
H	20	36.9%	37.9%	38.6%	39.0%	39.3%	39.5%	39.7%	39.8%	40.0%	40.1%	40.1%	40.2%	40.3%	40.3%	40.4%	40.4%
	24	37.4%	38.5%	39.2%	39.6%	39.9%	40.1%	40.3%	40.5%	40.6%	40.7%	40.8%	40.8%	40.9%	41.0%	41.0%	41.0%
E	28	38.4%	39.5%	40.2%	40.6%	40.9%	41.2%	41.4%	41.5%	41.6%	41.7%	41.8%	41.9%	42.0%	42.0%	42.1%	42.1%
	32	39.6%	40.7%	41.4%	41.9%	42.2%	42.4%	42.6%	42.8%	42.9%	43.0%	43.1%	43.2%	43.2%	43.3%	43.4%	43.4%
I	36	40.3%	41.5%	42.2%	42.6%	43.0%	43.2%	43.4%	43.6%	43.7%	43.8%	43.9%	44.0%	44.0%	44.1%	44.2%	44.2%
	40	40.6%	41.8%	42.5%	43.0%	43.3%	43.6%	43.8%	44.0%	44.1%	44.2%	44.3%	44.4%	44.4%	44.5%	44.5%	44.6%
G	44	41.3%	42.5%	43.2%	43.7%	44.1%	44.3%	44.5%	44.7%	44.8%	44.9%	45.0%	45.1%	45.2%	45.2%	45.3%	45.3%
	48	41.5%	42.7%	43.4%	43.9%	44.3%	44.5%	44.7%	44.9%	45.0%	45.1%	45.2%	45.3%	45.4%	45.4%	45.5%	45.5%
H	52	41.9%	43.1%	43.8%	44.3%	44.7%	44.9%	45.1%	45.3%	45.4%	45.5%	45.6%	45.7%	45.8%	45.8%	45.9%	45.9%
	56	42.4%	43.6%	44.3%	44.8%	45.2%	45.5%	45.7%	45.8%	46.0%	46.1%	46.2%	46.2%	46.3%	46.4%	46.4%	46.5%
T	60	42.6%	43.8%	44.6%	45.1%	45.4%	45.7%	45.9%	46.1%	46.2%	46.3%	46.4%	46.5%	46.6%	46.6%	46.7%	46.7%
	64	42.7%	43.9%	44.6%	45.1%	45.5%	45.8%	46.0%	46.1%	46.3%	46.4%	46.5%	46.6%	46.6%	46.7%	46.7%	46.8%
	68	43.0%	44.2%	45.0%	45.5%	45.8%	46.1%	46.3%	46.5%	46.6%	46.7%	46.8%	46.9%	47.0%	47.0%	47.1%	47.1%
	72	43.2%	44.4%	45.2%	45.7%	46.0%	46.3%	46.5%	46.7%	46.8%	46.9%	47.0%	47.1%	47.2%	47.2%	47.3%	47.3%

Maximum Recommended Intake CFM
Maximum Intake Velocity 400 FPM

		WIDTH IN INCHES															
		12	16	20	24	28	32	36	40	44	48	52	56	60	64	68	72
	12	115	158	201	244	287	330	373	415	458	501	544	587	630	673	716	758
	16	172	237	301	365	429	493	557	622	686	750	814	878	942	1006	1071	1135
H	20	246	337	428	520	611	703	794	886	977	1068	1160	1251	1343	1434	1525	1617
	24	299	411	522	634	745	856	968	1079	1191	1302	1413	1525	1636	1748	1859	1970
E	28	358	492	625	758	892	1025	1158	1292	1425	1558	1692	1825	1958	2092	2225	2358
	32	422	579	736	893	1050	1207	1364	1521	1678	1835	1992	2149	2306	2463	2620	2777
I	36	484	663	843	1023	1203	1383	1563	1743	1923	2103	2283	2463	2643	2823	3002	3182
	40	542	744	945	1147	1349	1550	1752	1954	2155	2357	2559	2760	2962	3164	3365	3567
G	44	606	831	1057	1282	1508	1733	1959	2184	2410	2635	2861	3086	3312	3537	3763	3988
	48	664	911	1158	1405	1652	1899	2146	2394	2641	2888	3135	3382	3629	3876	4123	4370
H	52	726	996	1266	1536	1807	2077	2347	2617	2887	3157	3427	3698	3968	4238	4508	4778
	56	791	1085	1380	1674	1968	2263	2557	2851	3146	3440	3734	4029	4323	4617	4912	5206
T	60	852	1169	1486	1803	2120	2437	2754	3071	3388	3705	4023	4340	4657	4974	5291	5608
	64	910	1249	1587	1926	2265	2603	2942	3281	3619	3958	4296	4635	4974	5312	5651	5990
	68	974	1337	1699	2062	2424	2786	3149	3511	3874	4236	4599	4961	5324	5686	6049	6411
	72	1036	1421	1807	2192	2577	2963	3348	3733	4119	4504	4890	5275	5660	6046	6431	6817

Recommended Specification

Furnish and install stationary louver models 2220 / 2225 as manufactured by Ventex, Bolton Ontario. Louvers shall be 2 inches (50.8 mm) deep. Blades shall be 0.062 Inches (1.57 mm), frame shall be 0.062 (1.57 mm) extruded aluminium, alloy 6063-T5.

Louvers shall have a 19 guage galvanized 1/2 x 1/2 birdscreen. All materials shall be factory finished after assembly with Polyester Baking Enamel in a color selected from the Ventex Color Chart.

ALUMAVENT ©

MODEL: 3960/3965- OB/PB Insulated Extruded Aluminium Control Damper

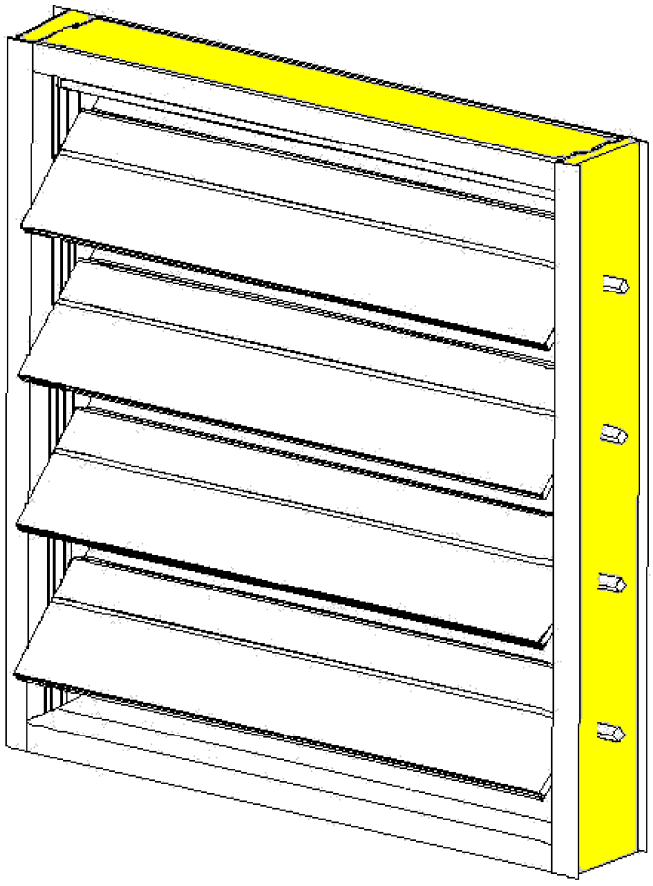

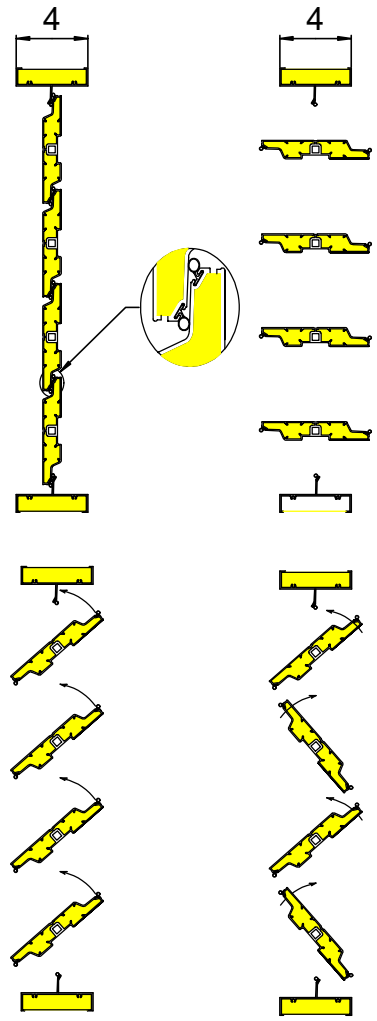

Parallel Blade

Opposed Blade

Quantity	Ref. #	Width (W)* Opening Size	Height (H)* Opening Size	Frame	Accessories
PROJECT NAME:					**ENGINEER:**
CONTRACTOR:					**SUBMITTAL DATE:**

MODEL: 3960/3965- OB/PB Insulated Extruded Aluminium Control Damper

STANDARD CONSTRUCTION

Depth: 4 Inches (101 mm)
Depth Blades Open: 6 1/8 Inches (156 mm)
Frame Thickness: 0.081"
Blade Thickness: 0.081"
Frame Style: Specify "DM" for Duct Mount Frame
Specify "FM" for Flange Mount Frame

Material:
Frame & Blades: Extruded 6063-T5 Aluminium

Frame Insulation: Polystyrene Insulation
Blade Insulation: Blades are thermally broken.
High density polyurethane non-CFC foam (R-2.25)
Seals: Vinyl Blade and Jamb Seals
Bearings: Dual Bearing system, consists of
Engineered thermoplastic bearings (Acetal)
Axles: 3/8" Aluminium Square Bar

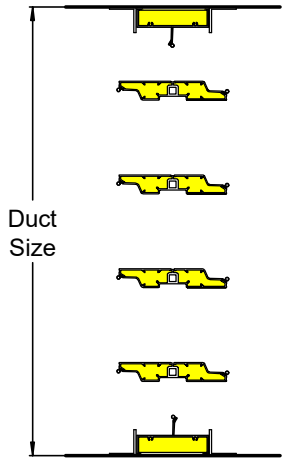

Duct Mount (3960)
(Under Cut 1/4" for Damper Size)

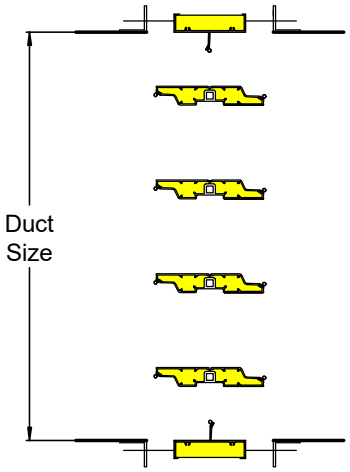

Flange Mount (3965)
(Add 2" for Damper Size)

Minimum Height:
8 Inches (203 mm) Single Blade
15 Inches (381 mm) Multiple Blade
Maximum Panel Width: 48 Inches (1219 mm)
Maximum Panel Height: 60 Inches (1524 mm)
Maximum Panel Size: 20 Sq Ft
Maximum System Pressures: 4" w.g
Operating Temperature: -40° F to +200 ° F

Leakage:
Does not exceed 10 cfm/ft² (34l/s/m²) against 4"w.g.(1 kPa) differential static pressure at -40° F(-40° C).

Linkage: Concealed in Frame
Standard Finish: Mill
Available Finish: Clear Anodized
Standard Motor Installation: Side Shaft Direct Drive
Extendable up to 12"

AVAILABLE ACCESSORIES

- Actuators
  Multiproducts, Belimo, Honeywell and Siemens
  Available Upon request
- End Switch for signalling peripheral devices
- Jack Shaft
- Hand Quadrants
- Chain Operation for manual operation spring closed
- Salt Water Construction

DWG 3960 Date: Aug 2005

LF120 (-S) US / LF230 (-S) US

On-off, spring return failsafe, 120/230 VAC



Torque min. 35 in-lb, for control of air dampers

Application

For on-off, fail-safe control of dampers in HVAC systems. Actuator sizing should be done in accordance with the damper manufacturer's specifications. Control is on-off from an auxiliary contact, or a manual switch.

The actuator is mounted directly to a damper shaft from 3/8" up to 1/2" in diameter by means of its universal clamp, 1/2" shaft centered at delivery. For shafts up to 3/4" use K6-1 accessory. A crank arm and several mounting brackets are available for applications where the actuator cannot be direct coupled to the damper shaft.

Operation

The LF series actuators provide true spring return operation for reliable fail-safe application and positive close off on air tight dampers. The spring return system provides consistent torque to the damper with, and without, power applied to the actuator. The LF series provides 95° of rotation and is provided with a graduated position indicator showing 0° to 95°.
The actuator may be stalled anywhere in its normal rotation without the need of mechanical end switches. Power consumption is reduced in holding mode. The actuator is double insulated so an electrical ground connection is not necessary.

The LF120-S US and LF230-S US versions are provided with 1 built-in auxiliary switch. This SPDT switch is provided for safety interfacing or signaling, for example, for fan start-up. The switching function is adjustable between 0° and 95°.

Technical Data	LF120 (-S) US	LF230 (-S) US
Power supply	120 VAC ± 10% 50/60 Hz	230 VAC ± 10% 50/60 Hz
Power consumption	running: 5.5 W holding: 3.5 W	5 W 3 W
Transformer sizing	7.5 VA	7 VA
Electrical connection	3 ft, 18 GA appliance cable (-S models have 2 cables) 1/2" conduit connector	
Overload protection	electronic throughout 0 to 95° rotation	
Electrical protection	actuators are double insulated	
Angle of rotation	max 95°, adjust. with mechanical stop	
Torque	35 in-lb [4 Nm] constant torque	
Direction of rotation	reversible with cw/ccw mounting	
Position indication	visual indicator, 0° to 95° (0° is spring return position)	
Auxiliary switch (-S models)	1 x SPDT 6A (1.5A) @ 250 VAC, UL listed adjustable 0° to 95°	
Electrical protection	actuators are double insulated	
Running time (nominal)	motor: < 40 to 75 sec spring: < 25 sec @-4°F to +122°F [-20°C to +50°C] < 60 sec @-22°F [-30°C]	
Humidity	5 to 95% RH non-condensing	
Ambient temperature	-22°F to +122°F [-30°C to +50°C]	
Storage temperature	-40°F to +176°F [-40°C to +80°C]	
Housing	NEMA type 2 / IP54	
Housing material	zinc coated steel	
Agency listings	UL 873, CSA C22.2 No. 24 Certified, CE [LF230(-S) US]	
Noise level	max: running < 50 db (A) spring return 62 dB (A)	
Servicing	maintenance free	
Quality standard	ISO 9001	
Weight	LF120/230 3.4 lbs (1.54 kg.) LF120/230-S 3.5 lbs (1.60 kg.)	

Dimensions [All numbers in brackets are in millimeters.]

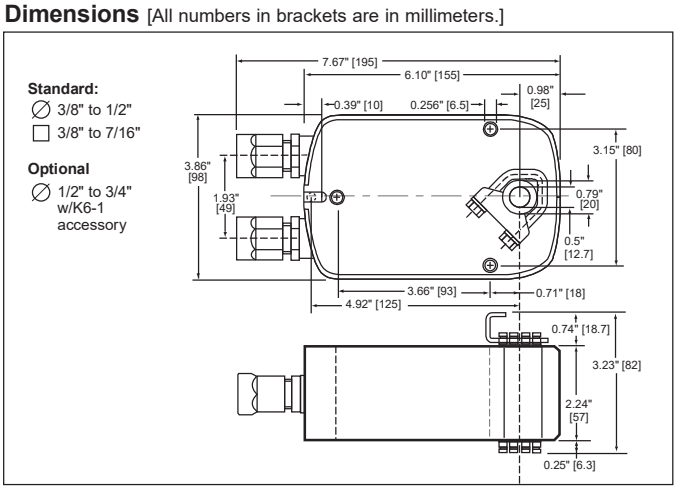

G20492-IG-Subject to change. © Belimo Aircontrols (USA), Inc.

D010

Accessories

AV 10-18	Shaft extension (K6-1 is required)
IND-LF	Damper position indicator
K6-1	Universal clamp for up to 3/4" diameter shafts
KH-LF	Crankarm for up to 1/2" round shaft
Tool-06	8mm and 10 mm wrench
ZG-LF2	Crankarm adaptor kit for LF
ZG-112	Mounting bracket for Honeywell Mod IV, M6415 type actuators, and new installations
ZG-LF112	Crankarm adaptor kit for Honeywell Mod IV, M6415 type actuators, and new installations
ZS-100	Weather shield (metal)
ZS-150	Weather shield (polycarbonate)
ZS-260	Explosion-proof housing

Note: When using LF120/230 US and LF120-S/230-S US actuators, only use accessories listed on this page.

LF120 (-S) US / LF230 (-S) US Typical Specification

On-off spring return damper actuators shall be direct coupled type which require no crankarm and linkage and be capable of direct mounting to a shaft up to a 3/4" diameter and center a 1/2" shaft. The actuators must be designed so that they may be used for either clockwise or counterclockwise fail-safe operation. Actuators shall be protected from overload at all angles of rotation. If required, 1 SPDT auxiliary switch shall be provided having the capability of being adjustable. Actuators must be constructed to meet the requirements for Double Insulation so an electrical ground is not required to meet agency listings. Actuators shall be UL listed and CSA certified, have a 5 year warranty, and be manufactured under ISO 9001 International Quality Control Standards. Actuators shall be as manufactured by Belimo.

Wiring diagrams

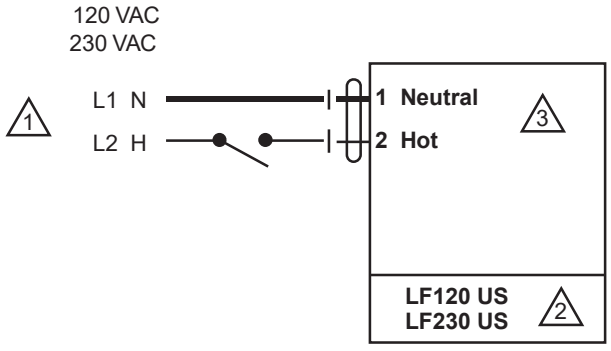

1 Provide overload protection and disconnect as required.

2 Actuators may be connected in parallel. Power consumption must be observed.

3 No ground connection is required.

On-off wiring for LF120 US / LF230 US

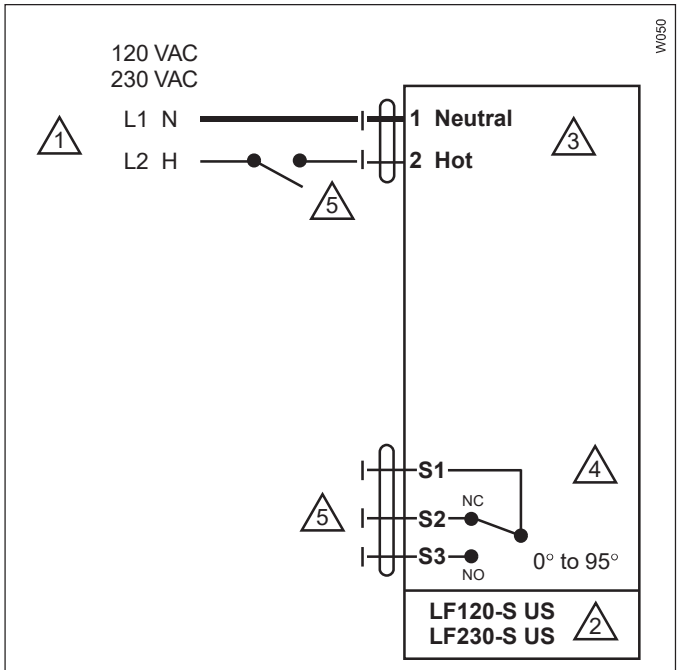

1 Provide overload protection and disconnect as required.

2 Actuators may be connected in parallel. Power consumption must be observed.

3 No ground connection is required.

4 For end position indication, interlock control, fan start-up, etc., LF120-S US and LF230-S US incorporate one built-in auxiliary switch: 1 x SPDT, 6A (1.5A) @250 VAC, UL listed, adjustable 0° to 95°.

5 Meets UL and CSA requirements without the need of an electrical ground connection.

On-off wiring for LF120-S US / LF230-S US

G20492-Subject to change. © Belimo Aircontrols (USA), Inc.

Section 3.7.6

Pressure Gauge

Stainless Steel Liquid Filled Gauge, Lead Free Stainless Steel Liquid Filled Gauge

PFQ, PFQ-LF



1. Optional U-Clamp
2. Optional Front Flange

LEAD FREE

RoHS compliant

Note; RoHS applies SS internals only

Description & Features:

- Pulsation resistant, liquid filled stainless steel case
- Glycerin filled standard
- Brass, lead free brass or stainless steel internals
- Restricted orifice standard on dual scale
- Ventable plug on 2.5” (63mm) and 4” (100mm) bottom mount (excluding SAE connection)
- Crimp-On bezel
- Single (psi) or dual scale (psi/kPa)/(psi/bar) available
- Optional U-Clamps and front flanges
- Dry case available
- ASME B40.100 compliant (EN837-1 available on 2” (50mm) dial and up)
- CRN registered
- 5 year warranty

Applications:

- Ideal for pumps, compressors, hydraulic presses, machinery, pneumatic equipment and motors in harsh environments
- Use where harmful vibration and pulsation are present
- Lead free version for potable water systems

Specifications	
Dial	1.5” (40mm), 2” (50mm), 2.5” (63mm), 4” (100mm), white aluminum with black and red markings
Case	AISI 304 SS
Lens	Polycarbonate
Ring	AISI 304 SS, Crimp-On
Socket	PFQ: OT 58 brass or AISI 316 SS PFQ-LF: Lead free brass
Connection	1/8”, 1/4” or 1/2” NPT or 7/16-20 SAE standard with restricted orifice
Fill Liquid	Glycerin
Bourdon Tube	1.5” (40mm), 2” (50mm): Phosphor bronze C or coil shaped for brass socket SS C or coil shaped for 316 SS socket 2.5” (63mm), 4” (100mm): Phosphor bronze or lead free phosphor bronze C or coil shaped for brass socket, AISI 316 SS C or coil shaped for 316 SS socket
Movement	OT 59 brass or SS
Pointer	Aluminum, anodized black
Welding	Brass: Silver alloy, 316SS: TIG
Over-pressure Limit	25% for pressures up to 1,450 psi (9,998 kPa), 15% for pressures over 1,450 psi (9,998 kPa)
Socket Gasket	Buna N for two-piece internal socket seal
Fill Plug	Buna N
Lens Ring Gasket	Silicone rubber
Working Pressure	Maximum 75% of full scale value
Ambient/Process Temperature	Dry: -40°F to 200°F (-40°C to 93°C) Glycerin Filled: -4°F to 150°F (-20°C to 65°C)
Accuracy	1.5” (40mm), 2” (50mm): ±2.5% of full scale value 2.5” (63mm), 4” (100mm): ±1.5% of full scale value
Enclosure Rating	IP65

Dual Scale Order Codes (products in bold are normally stock in North America)

Dial Size	2.5" (63mm)			
Connection	1/4" Bottom	1/4" Back (CB)	1/4" Bottom	1/4" Back (CB)
Movement, Socket, Tube	Brass		SS	
30" Hg Vac/kPa	**PFQ801**	**PFQ900**	**PFQ106**	PFQ147
30"/0/15 psi/kPa	**PFQ790**	PFQ890	PFQ107	PFQ148
30"/0/30 psi/kPa	**PFQ798**	**PFQ898**	**PFQ108**	PFQ149
30"/0/60 psi/kPa	**PFQ799**	**PFQ899**	**PFQ109**	PFQ151
30"/0/100 psi/kPa	**PFQ791**	PFQ891	PFQ110	PFQ156
30"/0/150 psi/kPa	**PFQ792**	**PFQ892**	PFQ111	PFQ157
30"/0/200 psi/kPa	**PFQ794**	**PFQ894**	PFQ112	PFQ158
30"/0/300 psi/kPa	**PFQ795**	PFQ895	PFQ113	PFQ159
0/15 psi/kPa	**PFQ800**	**PFQ901**	**PFQ118**	PFQ162
0/30 psi/kPa	**PFQ802**	**PFQ902**	**PFQ119**	**PFQ163**
0/60 psi/kPa	**PFQ803**	**PFQ903**	**PFQ120**	**PFQ164**
0/100 psi/kPa	**PFQ804**	**PFQ904**	**PFQ121**	**PFQ169**
0/160 psi/kPa	**PFQ805**	**PFQ905**	**PFQ122**	**PFQ170**
0/200 psi/kPa	**PFQ806**	**PFQ906**	**PFQ123**	**PFQ171**
0/300 psi/kPa	**PFQ807**	**PFQ907**	**PFQ124**	**PFQ175**
0/400 psi/kPa	**PFQ817**	PFQ917	**PFQ125**	PFQ177
0/600 psi/kPa	**PFQ808**	**PFQ908**	**PFQ126**	**PFQ178**
0/1,000 psi/kPa	**PFQ809**	**PFQ909**	**PFQ127**	PFQ179
0/1,500 psi/kPa	**PFQ816**	**PFQ914**	**PFQ128**	PFQ180
0/2,000 psi/kPa	**PFQ810**	**PFQ910**	**PFQ129**	PFQ181
0/3,000 psi/kPa	**PFQ811**	**PFQ911**	**PFQ137**	**PFQ182**
0/4,000 psi/kPa	PFQ819	PFQ919	PFQ130	-
0/5,000 psi/kPa	**PFQ812**	**PFQ912**	**PFQ138**	**PFQ183**
0/6,000 psi/kPa	**PFQ814**	**PFQ915**	**PFQ139**	PFQ184
0/7,500 psi/kPa	**PFQ818**	PFQ918	PFQ144	PFQ186
0/10,000 psi/kPa	**PFQ813**	**PFQ913**	**PFQ145**	PFQ190
0/15,000 psi/kPa	-	-	PFQ146	PFQ191

Dial Size	2.5" (63mm)	
Connection	1/4" Bottom	1/4" Back (CB)
Movement, Socket, Tube	Brass	
30" Hg Vac/bar	PFQ801R1R11	PFQ900R1R11
30"/0/15 psi/bar	PFQ790R1R11	PFQ890R1R11
30"/0/30 psi/bar	PFQ798R1R11	PFQ898R1R11
30"/0/60 psi/bar	PFQ799R1R11	PFQ899R1R11
30"/0/100 psi/bar	PFQ791R1R11	PFQ891R1R11
30"/0/160 psi/bar	PFQ792R1R11	PFQ892R1R11
30"/0/200 psi/bar	PFQ794R1R11	PFQ894R1R11
30"/0/300 psi/bar	PFQ795R1R11	PFQ895R1R11
0/15 psi/bar	PFQ800R1R11	PFQ901R1R11
0/30 psi/bar	PFQ802R1R11	PFQ902R1R11
0/60 psi/bar	PFQ803R1R11	PFQ903R1R11
0/100 psi/bar	PFQ804R1R11	PFQ904R1R11
0/160 psi/bar	PFQ805R1R11	PFQ905R1R11
0/200 psi/bar	PFQ806R1R11	PFQ906R1R11
0/300 psi/bar	PFQ807R1R11	PFQ907R1R11
0/400 psi/bar	PFQ817R1R11	PFQ917R1R11
0/600 psi/bar	PFQ808R1R11	PFQ908R1R11
0/1,000 psi/bar	PFQ809R1R11	PFQ909R1R11
0/1,500 psi/bar	PFQ816R1R11	PFQ914R1R11
0/2,000 psi/bar	PFQ810R1R11	PFQ910R1R11
0/3,000 psi/bar	PFQ811R1R11	PFQ911R1R11
0/4,000 psi/bar	PFQ819R1R11	PFQ919R1R11
0/5,000 psi/bar	PFQ812R1R11	PFQ912R1R11
0/6,000 psi/bar	PFQ814R1R11	PFQ915R1R11
0/7,500 psi/bar	PFQ818R1R11	PFQ918R1R11
0/10,000 psi/bar	PFQ813R1R11	PFQ913R1R11

Other ranges and connection sizes available upon request. For scale change, refer to How to Order Guide for scale codes.
For options, attach suffix to end of order code: i.e. PFQ801-25DRY for DRY CASE

Option suffix:
25BF = 2.5" (63mm) Back flange
25DRY = Supply 2.5" (63mm) gauge dry
25FF = 2.5" (63mm) Front flange
25UC = 2.5" (63mm) U-Clamp
EN = EN837-1 compliant
SF25 = 2.5" (63mm) Silicone filled

Stainless Steel Liquid Filled Gauge, Lead Free Stainless Steel Liquid Filled Gauge

1.5” Back Connection with Front Flange and U-Clamp

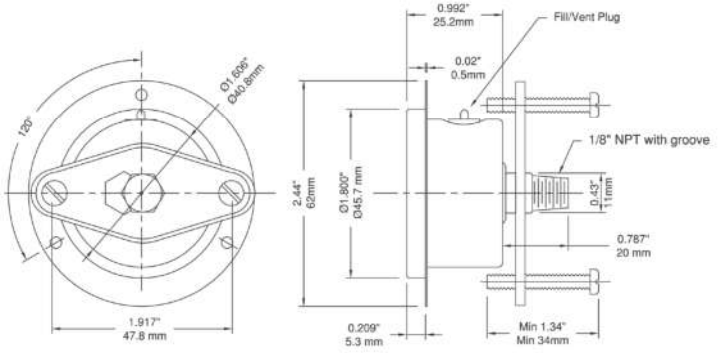

2” Bottom Connection

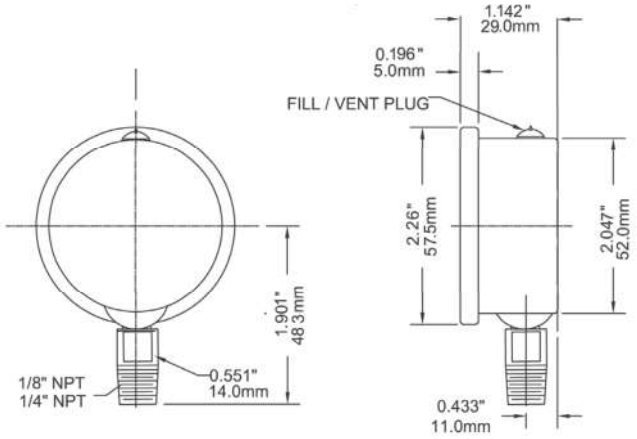

2.5” Back Connection with Front Flange

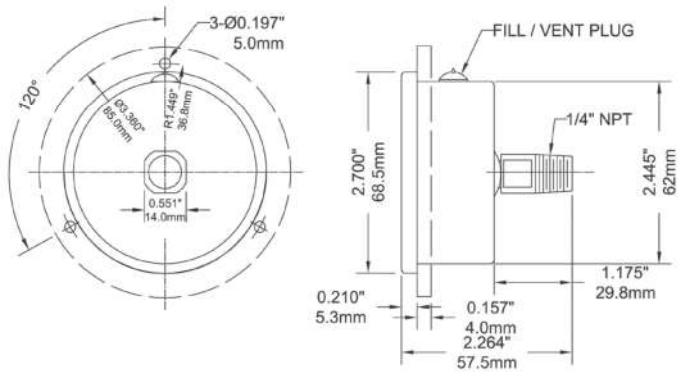

2.5” Back Connection with U-Clamp

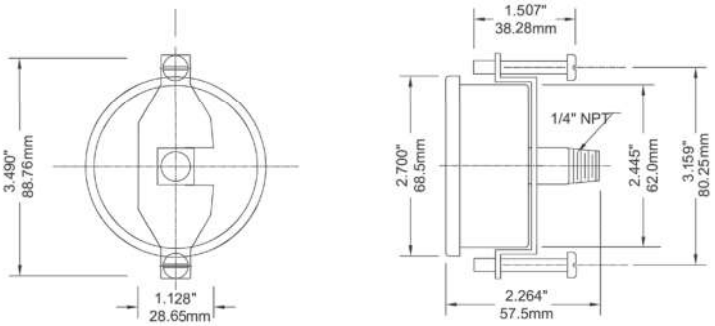

2.5” Bottom Connection SAE

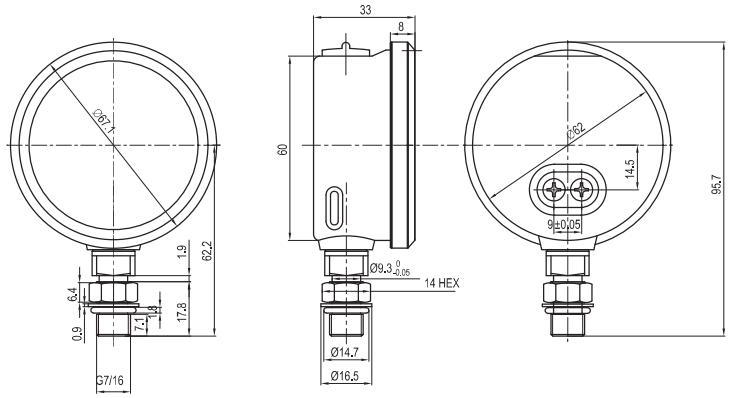

Dimensions in mm

4” Back Connection with Front Flange

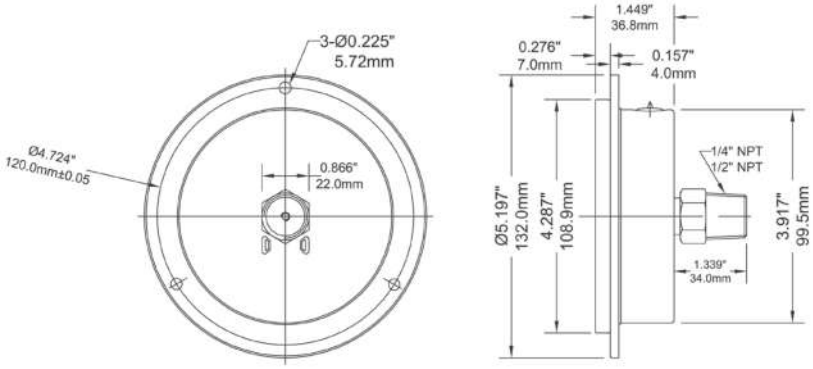

1.800.561.8187
www.itm.com
WINTERS INSTRUMENTS
information@itm.com

Section 3.7.7

Back Flow Preventor

For Non-Health Hazard Applications

Job Name _____ Contractor _____

Job Location _____ Approval _____

Engineer _____ Contractor's P.O. No. _____

Approval _____ Representative _____

Series 007
Double Check Valve Assemblies

Sizes: ½" – 3" (15 – 80mm)

Series 007 Double Check Valve Assemblies shall be installed at referenced cross-connections to prevent the backflow of polluted water into the potable water supply. Only those cross-connections identified by local inspection authorities as non-health hazard shall be allowed the use of an approved double check valve assembly.

Check with local authority having jurisdiction regarding vertical orientation, frequency of testing or other installation requirements.

The valve shall meet the requirements of ASSE Std. 1015 and AWWA Std. C510. Approved by the Foundation for Cross-Connection Control and Hydraulic Research at the University of Southern California.

Features

- Ease of maintenance — only one cover
- Top entry
- Replaceable seats and seat discs
- Modular construction
- Compact design
- Cast bronze body construction — ½" – 2" (15 – 50mm)
- Fused epoxy coated cast iron body — 2½" – 3" (65 – 80mm)
- Top mounted ball valve test cocks
- Low pressure drop
- No special tools required for servicing
- ½" – 1" (15 – 25mm) have tee handles

Specifications

A Double Check Valve Assembly shall be installed at each noted location. The assembly shall consist of two positive seating check modules with captured springs and rubber seat discs. The check module seats and seat discs shall be replaceable. Service of all internal components shall be through a single bronze or stainless steel access cover secured with stainless steel bolts. The assembly shall also include two resilient seated isolation valves; four top mounted, resilient seated test cocks. The assembly shall meet the requirements of ASSE Std. 1015 and AWWA Std. C510. Approved by the Foundation for Cross-Connection Control and Hydraulic Research at the University of Southern California. Assembly shall be a Watts Series 007.

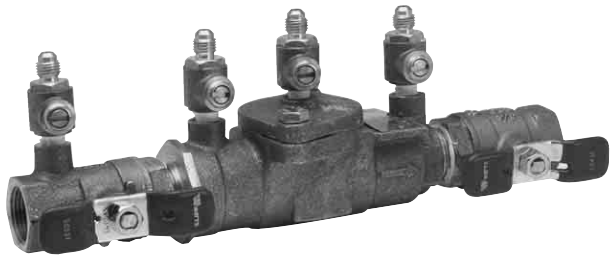

¾" (20mm) 007M3QT



2" (50mm) 007M1QT HC

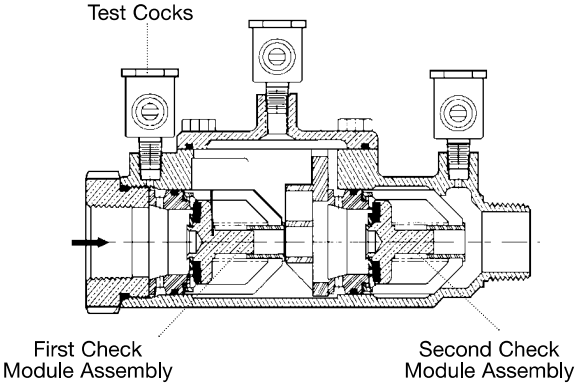

The 007 Series features a modular design concept which facilitates complete maintenance and assembly by retaining the spring load.

Now Available
WattsBox Insulated Enclosures.
For more information, send for literature ES-WB.

IMPORTANT: *INQUIRE WITH GOVERNING AUTHORITIES FOR LOCAL INSTALLATION REQUIREMENTS*

Watts product specifications in U.S. customary units and metric are approximate and are provided for reference only. For precise measurements, please contact Watts Technical Service. Watts reserves the right to change or modify product design, construction, specifications, or materials without prior notice and without incurring any obligation to make such changes and modifications on Watts products previously or subsequently sold.

Pressure — Temperature

½" – 2" (15 – 50mm)

Temperature Range: 33°F – 180°F (0.5°C – 82°C).

Maximum Working Pressure: 175psi (12.1 bar).

2½" – 3" (65 – 80mm)

Temperature Range: 33°F – 110°F (0.5°C – 43°C) continuous, 140°F (60°C) intermittent.

Maximum Working Pressure: 175psi (12.1 bar).

Standards

ASSE Std. 1015, AWWA Std. C510

IAPMO PS31, CSA B64.5

Approvals

† ASSE, AWWA, IAPMO, CSA, UPC

▲ Approved by the Foundation for Cross-Connection Control and Hydraulic Research at the University of Southern California.

• Models LF and S are not listed.

◆ UL Classified (LF models only) ¾" – 2" (20 – 50mm) (except 007M3LF)

◆ UL Classified with OSY gate valves (2½" and 3" horizontal only.)

* Horizontal and vertical "flow up" approval on all sizes

Suffix:

S - bronze strainer

LF - without shutoff valves

LH - locking handle ball valves (open position)

SH - stainless steel ball valve handles

HC - 2½" inlet/outlet fire hydrant fittings (2" valve)

Prefix:

U - Union connections

2½" – 3" (65 – 80mm)

Suffix:

NRS - non-rising stem resilient seated gate valves

OSY - UL/FM outside stem and yoke resilient seated gate valves

LF - without shutoff valves

QT-FDA - FDA epoxy coated quarter-turn ball valves

Dimensions – Weights

Models

Sizes: ½" – 2" (15 – 50mm)

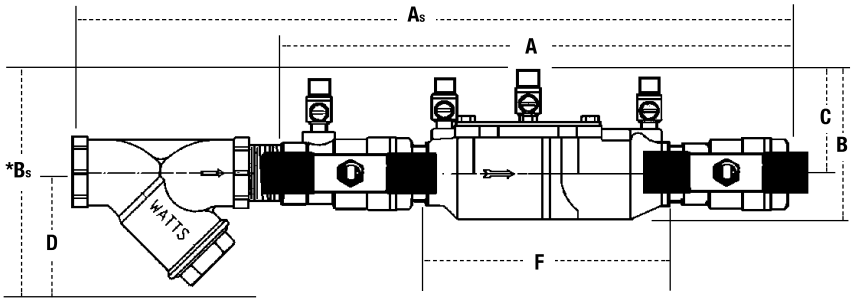

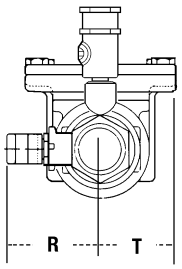

***Subscript 'S' = strainer model**

Suffix HC — Fire Hydrant Fittings dimension "A" = 23½" (594mm)

MODEL	SIZE (DN)		DIMENSIONS																WEIGHT	
			A		B		C		D		F		G		R		T			
	in.	mm	in.	mm	in.	mm	in.	mm	in.	mm	in.	mm	in.	mm	in.	mm	in.	mm	lbs.	kgs.
†▲007QT	½	15	10	254	4⅝	117	2⁷⁄₁₆	62	—	—	5	127	3⅜	85	2⁵⁄₁₆	59	2¹⁄₁₆	52	4.5	2
†▲007M3QT	¾	20	11⅛	282	4	102	3⅛	79	—	—	6³⁄₁₆	157	3⁷⁄₁₆	87	2⅛	54	1⁵⁄₁₆	33	5	2.3
†▲007M1QT	1	25	13¼	337	5⅛	130	4	102	—	—	7½	191	3⅜	85	1¹¹⁄₁₆	43	1¹¹⁄₁₆	43	12	5.4
†▲007M2QT	1¼	32	16⅜	416	5	127	3⁵⁄₁₆	84	—	—	9½	241	5	127	3	76	2	50	15	6.8
†▲007M2QT	1½	40	16¾	425	4⅞	124	3½	89	—	—	9¾	248	5¹³⁄₁₆	148	3⅛	79	2¹¹⁄₁₆	68	15.9	7.2
†▲007M1QT	2	50	19½	495	6¼	159	4	102	—	—	13⅜	340	6⅛	156	3⁷⁄₁₆	87	2¹¹⁄₁₆	68	25.7	11.7
• 007QT-S	½	15	13	330	6	152	2⁷⁄₁₆	62	3	76	5	127	3⅜	85	2⁵⁄₁₆	59	2¹⁄₁₆	52	5.5	2.5
• 007M3QT-S	¾	20	14½	368	6⅛	156	3⅛	79	3	76	6³⁄₁₆	157	3⁷⁄₁₆	87	2⅛	54	1⁵⁄₁₆	33	6.7	3.1
• 007M1QT-S	1	25	17¹⁵⁄₁₆	157	7¾	197	4	102	3¼	83	7½	191	3⅜	85	1¹¹⁄₁₆	43	1¹¹⁄₁₆	43	14	6.4
• 007M2QT-S	1¼	32	21½	546	7¹⁄₁₆	179	3⁵⁄₁₆	84	3½	83	9½	241	5	127	3	76	2	50	19	8.6
• 007M2QT-S	1½	40	25¹⁄₁₆	637	7¹⁄₁₆	179	3½	89	3¾	95	9¾	248	5¹³⁄₁₆	148	3⅛	79	2¹¹⁄₁₆	68	19.6	8.9
• 007M1QT-S	2	50	27¼	692	8¾	222	4	102	4	102	13⅜	340	6⅛	156	3⁷⁄₁₆	87	2¹¹⁄₁₆	68	33.5	15.2

Dimensions – Weights

Sizes: 2½" – 3" (65 – 80mm)

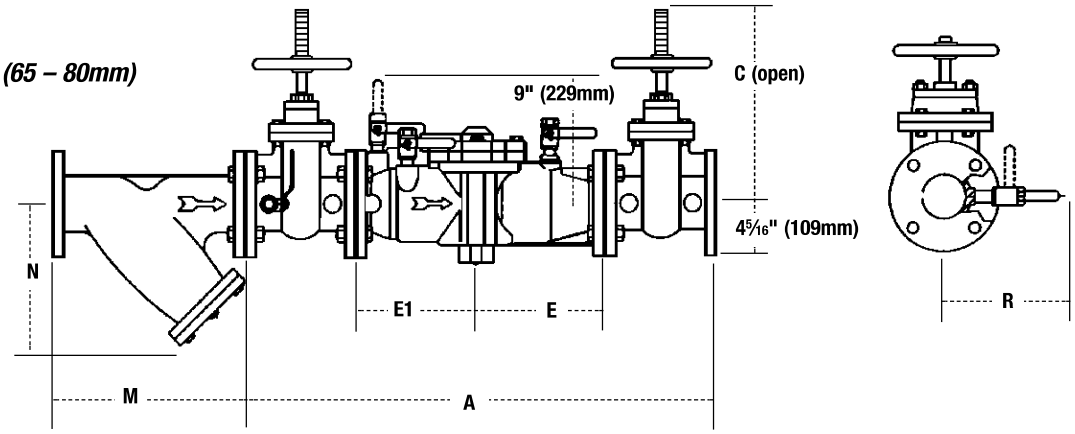

MODEL		SIZE (DN)		DIMENSIONS								WEIGHT	
				A		C		E, E1		R			
		in.	mm	in.	mm	in.	mm	in.	mm	in.	mm	lbs.	kgs.
	007QT-FDA	2½	65	33⅛	841	6⅜	162	9¹⁄₁₆	230	8¾	222	155	70
▲	007-NRS	2½	65	33⅛	841	9⅜	238	9¹⁄₁₆	230	8¾	222	155	70
▲◆	007-OSY	2½	65	33⅛	841	16⅜	416	9¹⁄₁₆	230	8¾	222	158	72
	007-QT-FDA	3	80	34⅛	867	6⅜	162	9¹⁄₁₆	230	8¾	222	155	70
▲◆	007-NRS	3	80	34⅛	867	10¼	260	9¹⁄₁₆	230	8¾	222	185	84
▲	007-OSY	3	80	34⅛	867	18⅞	479	9¹⁄₁₆	230	8¾	222	185	84

Strainer Dimensions

SIZE						WEIGHT	
		M		N			
in.	mm	in.	mm	in.	mm	lbs.	kgs.
2½	65	10	254	6½	165	28	13
3*	80	10⅛	267	7	178	34	15

*S Models only

1" U007M1QT

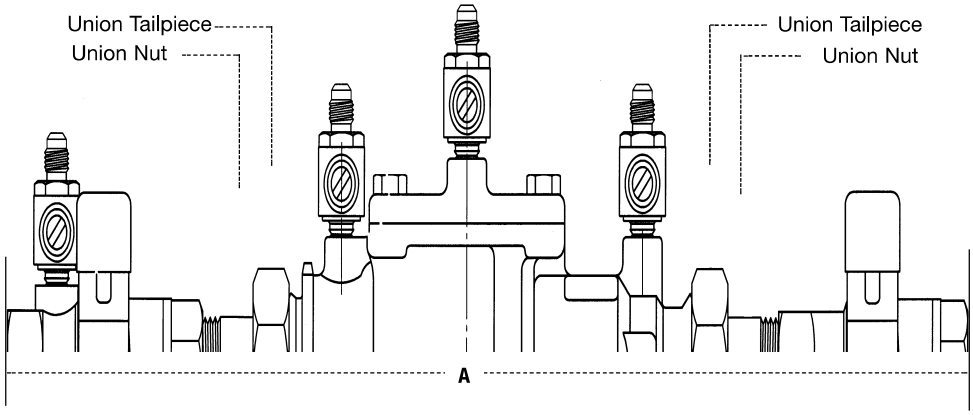

Sizes: ½" – 2" (15 – 50mm)

MODEL	SIZE (DN)		DIMENSIONS	
			A	
	in.	mm	in.	mm
U007QT	½	15	12¹³⁄₁₆	326
U007M2QT	¾	20	13¹³⁄₁₆	350
U007M2QT	1	25	16⅝	422
U007M2QT	1¼	32	20¾	527
U007M2QT	1½	40	21½	546
U007M1QT	2	50	24½	622

Capacity

As complied from documented Foundation for Cross-Connection Control and Hydraulic Research at the University of Southern California lab tests.

* Typical maximum system flow rate (7.5 feet/sec., 2.3 meters/sec.)
** UL rated flow

½" (15mm)

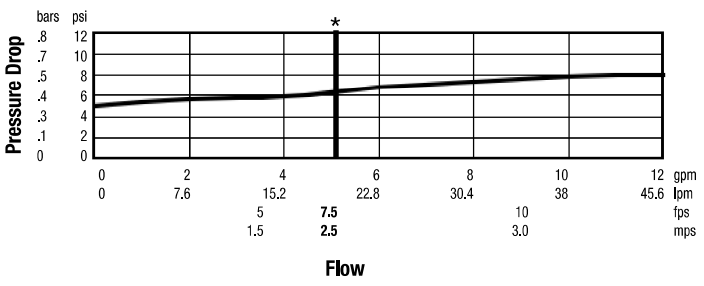

1½" (40mm)

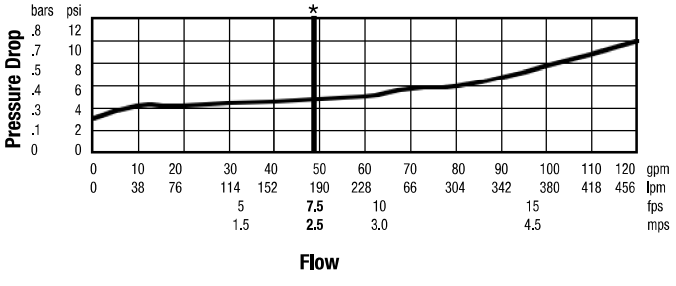

¾" (20mm)

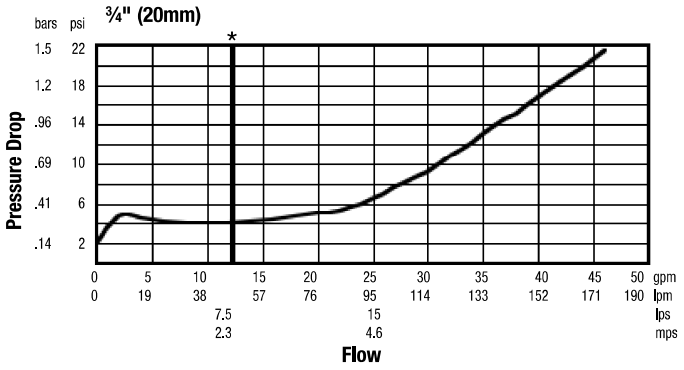

2" (50mm)

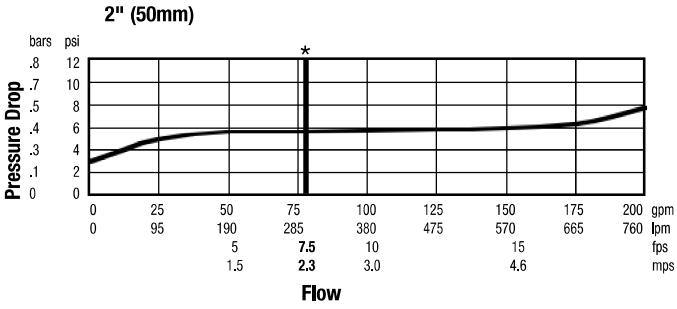

1" (25mm)

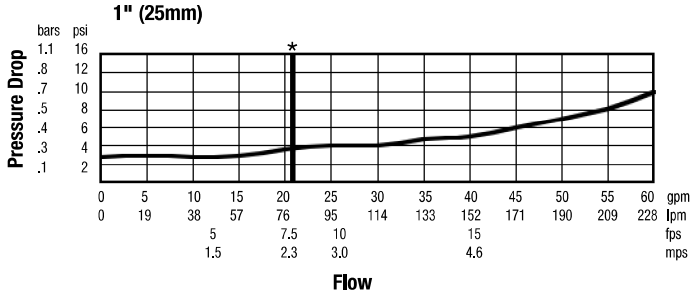

2½" (65mm)

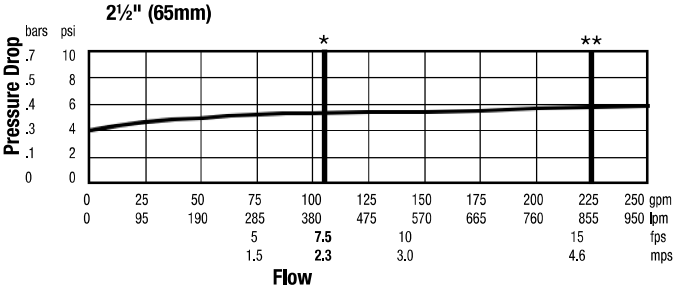

1¼" (32mm)

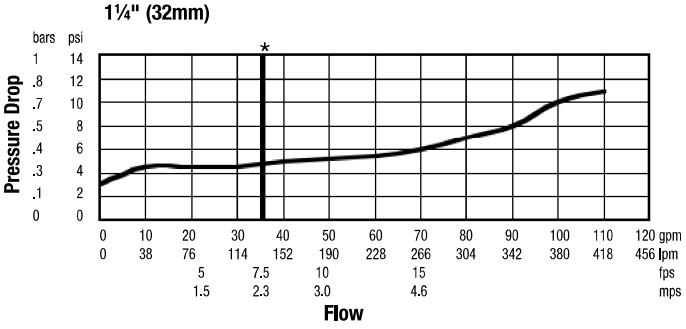

3" (80mm)

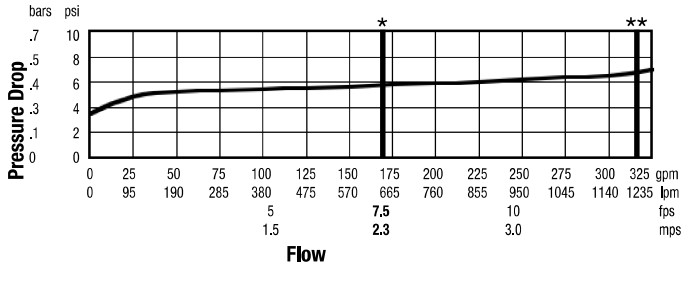

© 2011 Watts

Installation, Maintenance, & Repair
Series 007 and LF007
Double Check Valve Assemblies

Sizes: ½" – 3" (15 - 80mm)

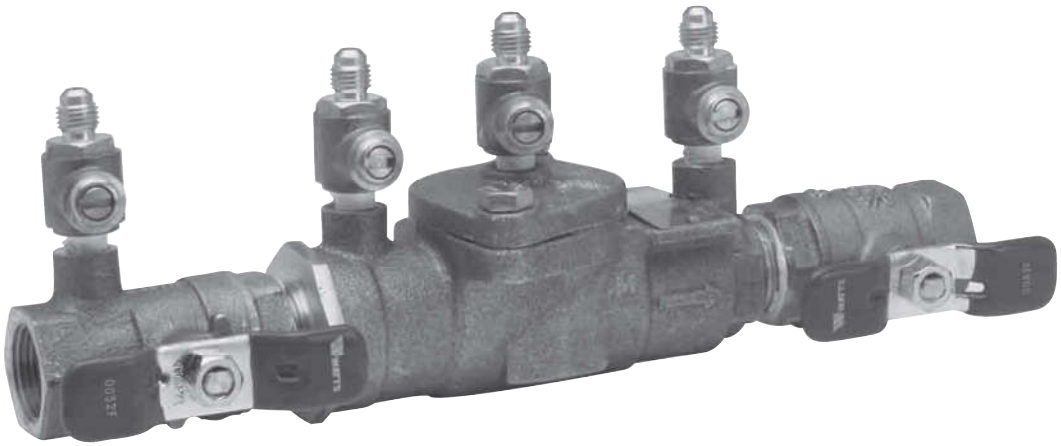

¾" 007M3QT

⚠ WARNING

You are required to thoroughly read all installation instructions and product safety information before beginning the installation of this product. **FAILURE TO COMPLY WITH PROPER INSTALLATION AND MAINTENANCE INSTRUCTIONS COULD RESULT IN PRODUCT FAILURE WHICH CAN CAUSE PROPERTY DAMAGE, PERSONAL INJURY AND/OR DEATH.** Watts is not responsible for damages resulting from improper installation and/or maintenance.

Local building or plumbing codes may require modifications to the information provided. You are required to consult the local building and plumbing codes prior to installation. If this information is not consistent with local building or plumbing codes, the local codes should be followed.

Need for Periodic Inspection/Maintenance: This product must be tested periodically in compliance with local codes, but at least once per year or more as service conditions warrant. Corrosive water conditions, and/or unauthorized adjustments or repair could render the product ineffective for the service intended. Regular checking and cleaning of the product's internal components helps assure maximum life and proper product function.

NOTE: For Australia and New Zealand, line strainers should be installed between the upstream shutoff valve and the inlet of the backflow preventer.

Watts product specifications in U.S. customary units and metric are approximate and are provided for reference only. For precise measurements, please contact Watts Technical Service. Watts reserves the right to change or modify product design, construction, specifications, or materials without prior notice and without incurring any obligation to make such changes and modifications on Watts products previously or subsequently sold.

Testing

For field testing procedure, send for IS-TK-DL, IS-TK-7, IS-TK-9A, IS-TK-99E AND IS-TK-99D.

For other repair kits and service parts, send for PL-RP-BPD.

For technical assistance, contact your local Watts representative.

WATTS®

Installation Instructions

Series 007 and LF007

½" - 2" (15 - 50mm)

Indoors - Figure 1

Check local codes for installation requirements. Pipe lines should be thoroughly flushed to remove foreign material before installing the unit. A strainer should be installed as shown, ahead of backflow preventer to prevent disc from unnecessary fouling. Install valve inline with arrow on valve body pointing in the direction of flow.

For indoor installations, it is important that the valve be easily accessible to facilitate testing and servicing. Do not install in a concealed location.

CAUTION:

Do not install with strainer when backflow preventer is used on seldom-used water lines which are called upon during emergencies, such as fire sprinkler lines, etc.

It is important that Series 007 and LF007 be tested periodically in compliance with local codes, but at least once a year or more often depending upon system conditions. Regular inspection, testing and cleaning assures maximum life and proper product function.

NOTE: Fire Protection System Installations

The National Fire Protection Agency (NFPA) Guidelines require a confirming flow test to be conducted whenever a "main line" valve such as the shutoff valves or a backflow assembly have been operated. Certified testers of backflow assemblies must conduct this test. The trim valves of the confirming flow test. When the test is completed, the trim valves must be returned to a fully open position.

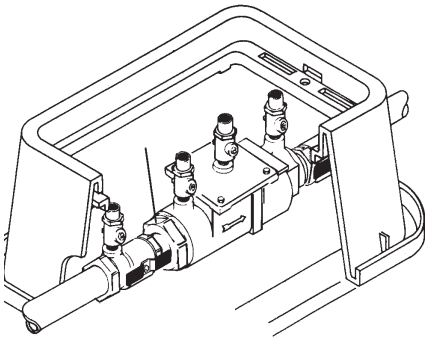

Meter Box Installation

Parallel - Figure 3

Two or more Series 007 and LF007 smaller size valves may be piped in parallel (where approved) to serve a larger supply pipe main. This type of installation is employed whenever it is vital to maintain a continuous supply of water/where interruptions for testing and servicing would be unacceptable. It also has the advantage of providing increased capacity where needed beyond that provided by a single valve and permits testing or servicing of an individual valve without shutting down the complete line.

For two valve installations the total capacity of the devices should equal or exceed that required by the system.

The quantity of valves used in parallel should be determined by the engineers judgement based on the operating conditions of a specific installation.

Figure 1

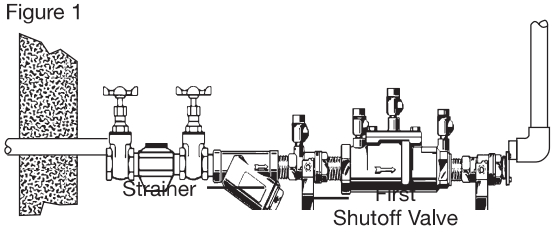

007QT-S / LF007

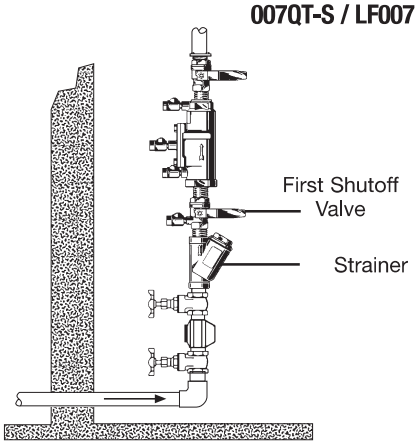

007QT-S Vertical flow-up installation

Figure 2

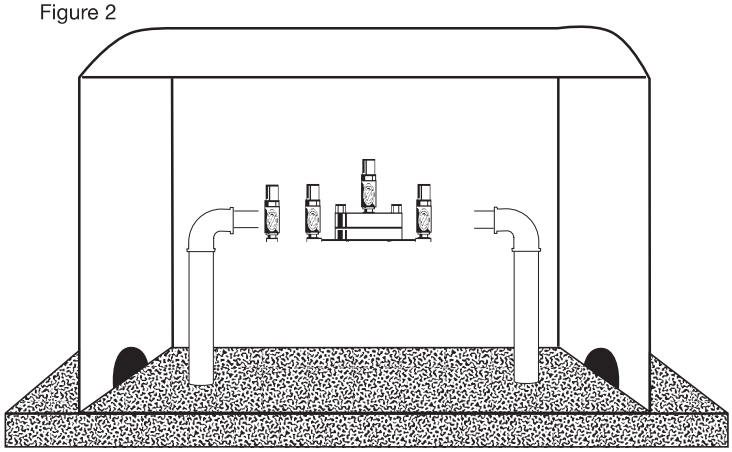

WattsBox Insulated Enclosure
Available in Aluminum or Fiberglass.
For more information, send for ES-WB.

Figure 3

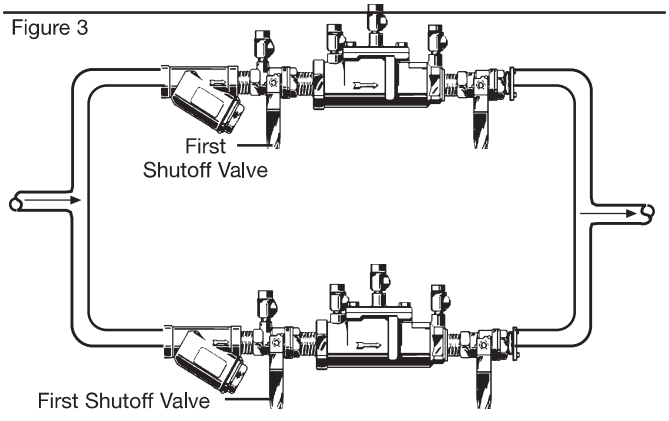

007QT-S / LF007

Service, Replacement Parts and Maintenance

Series 007 and LF007

Servicing the First and Second Check Valves

NOTE: Before servicing, ensure supply water is turned off or shutoff valves are in the closed position.

1. Remove the cover, then remove the retainer from the body valve. The check valve modules can now be removed from the valve by hand or with a screwdriver.

NOTE: For Series 007 and LF007 sizes ½" - 2" (15-50mm), the seats and springs of the first and second check modules are not interchangeable. The heavier spring and smaller diameter seat belong with the first check module. Series 007M1 sizes ¾" - 1" (20-25mm) and Series 007M2 ¾" (20mm) have interchangeable seats and springs.

2. The check seats are attached to the cage with a bayonet type locking arrangement. Holding the cage in one hand, push the seat inward and rotate clockwise against the cage. For ¾" (20mm) Series 007M2/LF007M2 and LF007 pull apart seat and cage. The seat, cage, spring and disc assembly are now individual components.

3. The disc assembly may now be cleaned and reassembled or, depending on its condition, it may be discarded and replace with a new assembly from the repair kit. O-rings should be cleaned or replaced as necessary.

4. Reassemble the check valve module in the reverse order. Check modules are installed in the valve body with the seats facing the valve inlet. The modules must be securely in place before the retainer can be replaced. On the ¾" - 1" (20-25mm) size, this retainer may have to be tilted slightly into place. Replace cover.

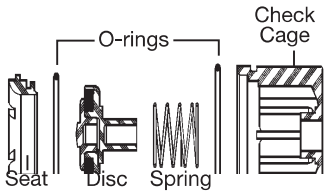

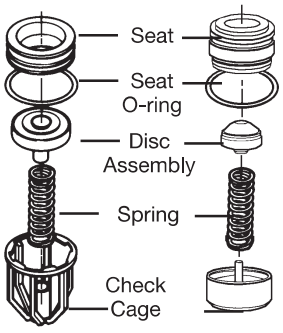

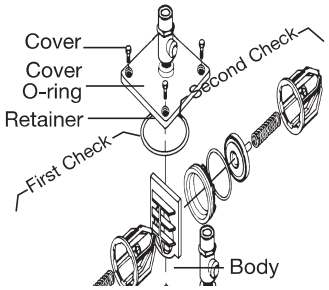

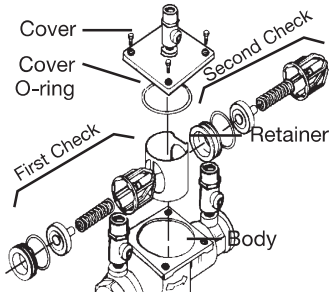

Service, Replacement Parts and Maintenance

Series 007 and LF007

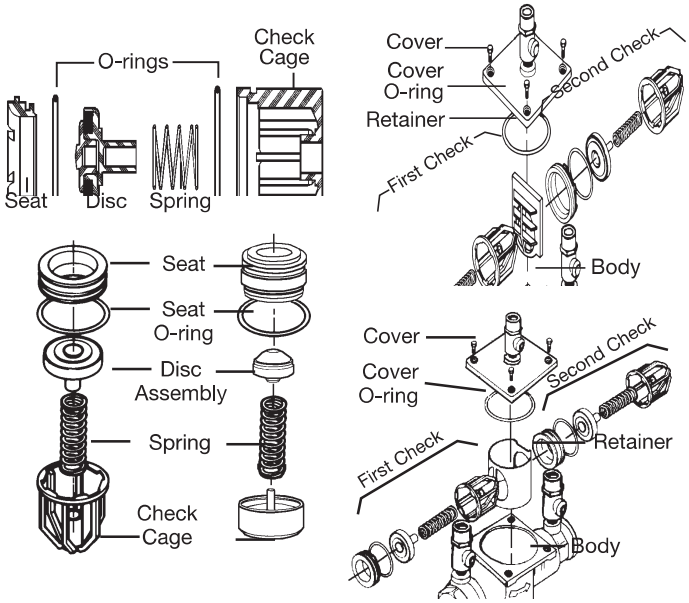

Repair Kits

½" - 2"

When ordering, specify ordering code number, kit number and valve size

ORDERING CODE	KIT NO.	SIZE in.	SIZE mm
Total Repair Kits			
0887033	RK 007-T	½	15
0887724	RK 007M2-T	¾	20
0888554	RK 007M3-T	¾	20
0887027	RK 007-T	¾ – 1	20-25
0887044	RK 007M1-T	¾ – 1	20-25
0887723	RK 007M2-T	1¼ – 1½	32-40
0887034	RK 007-T	1½ – 2	40-50
0887192	RK 007M1-T	1½ – 2	40-50

Kit includes: first check repair kit, second check repair kit, retainer (if plastic)

*The wetted surface of this product contacted by consumable water contains less than 0.25% of lead by weight.

Repair Kits

½" - 2"

When ordering, specify ordering code number, kit number and valve size

ORDERING CODE	KIT NO.	SIZE in.	SIZE mm
Check Kits: 1st or 2nd Check			
0887193	RK 007 CK4	½	15
0887026	RK 007M1 CK4	¾ - 1	20-25
0887377	*RK SS007 CK4	½	15
0888070	*RK SS007M3 CK1	½ - ¾	15-20
0888071	*RK SS007M3 CK2	½ - ¾	15-20
0887393	*RK SS007M2 CK1	¾	20
0887397	*RK SS007M2 CK2	¾	20
0887373	*RK SS007M1 CK4	1	25
1st Check			
0887045	RK 007M2 CK1	¾	20
0888550	RK 007M3 CK1	¾	20
0887393	RK SS007M2 CK1	¾	20
0888070	RK SS007M3 CK1	½ – ¾	15-20
0887023	RK 007 CK1	¾ – 1	20-25
0887025	RK 007 CK1	1½ – 2	40-50
0887186	RK 007M1 CK1	1½ – 2	40-50
0887719	RK 007M2 CK1	1¼ – 1½	32-40
2nd Check			
0887046	RK 007M2 CK2	¾	20
0888551	RK 007M3 CK2	¾	20
0888071	RK SS007M3 CK2	½ – ¾	15-20
0887024	RK 007 CK2	¾ – 1	20-25
0887028	RK 007 CK2	1½ – 2	32-50
0887187	RK 007M1 CK2	1½ – 2	32-50
0887720	RK 007M2 CK2	1¼ – 1½	32-40
Stainless Steel 1st or 2nd Check			
0887022	RK 007 CK1 SS	¾ – 1	20-25
0887030	RK 007 CK2 SS	¾ – 1	20-25
0887032	RK 007M1 CK4 SS	¾ – 1	20-25
0887031	RK 007 CK1 SS	1½ – 2	40-50
0887035	RK 007 CK2 SS	1½ – 2	40-50
0887189	RK 007M1 CK1 SS	1½ – 2	40-50
0887190	RK 007M1 CK2 SS	1½ – 2	40-50

Kit includes: Seat, seat o-ring, disc assembly, spring, check cage, cover o-ring.

Cover Kit			
0887195	RK 007 C	½	15
0887379	RK SS007 C	½	15
0888073	RK SS007M3 C	½ – ¾	15-20
0887039	RK 007M2 C	¾	20
0887380	RK SS007M2 C	¾	20
0888553	RK 007M3 C	¾	20
0887381	RK SS007M1 C	1	25
0887036	RK 007 C	¾ – 1	20-25
0887038	RK 007M1 C	¾ – 1	20-25
0887191	RK 007M1 C	1½ – 2	40-50
0887722	RK 007M2 C	1¼ – 1½	32-40
0794004	LFRK 007M1 C	¾ – 1	20-25
0794005	LFRK 007M1 C	¾ – 1	20-25

Kit includes: Cover and cover o-ring

Complete Rubber Parts			
0887194	RK 007 RT	½	15
0887378	RK SS007 RT	½	15
0888072	RK SS007M3 RT	½ – ¾	15-20
0887394	RK SS007M2 RT	¾	20
0887043	RK 007M2 RT	¾	20
0888552	RK 007M3 RT	¾	20
0887374	RK SS007M1 RT	1	25
0887040	RK 007 RT	¾ – 1	20-25
0887042	RK 007M1 RT	¾ – 1	20-25
0887041	RK 007 RT	1½ – 2	40-50
0887188	RK 007M1 RT	1½ – 2	40-50
0887721	RK 007M2 RT	1¼ – 1½	32-40

Kit includes: Cover o-ring, two seat discs and two seat o-rings.
NOTE: *SS prefix denotes stainless steel body.

Installation Instructions

Series 007 and LF007

2½" and 3"

Indoors - Figure 4

Series 007 may be installed in either a vertical or horizontal position. Pipe lines should be thoroughly flushed to remove foreign material before installing the unit. A strainer should be installed as shown, ahead of backflow preventer to prevent disc from unnecessary fouling. Install valve inline with arrow on valve body pointing in the direction of flow.
For indoor installations, it is important that the valve be easily accessible to facilitate testing and servicing. Do not install in a concealed location.

CAUTION:

Do not install with strainer when backflow preventer is used on seldom-used water lines which are called upon during emergencies, such as fire sprinkler lines, etc.
It is important that Series 007 and LF007 be tested periodically in compliance with local codes, but at least once a year or more often depending upon system conditions.

NOTE: Fire Protection System Installations
The National Fire Protection Agency (NFPA) Guidelines require a confirming flow test to be conducted whenever a "main line" valve such as the shutoff valves or a backflow assembly have been operated. Certified testers of backflow assemblies must conduct this test. The trim valves of the detector meter bypass line, on assemblies so equipped, should be shutoff during the confirming flow test. When the test is completed, the trim valves must be returned to a fully open position.

Figure 4

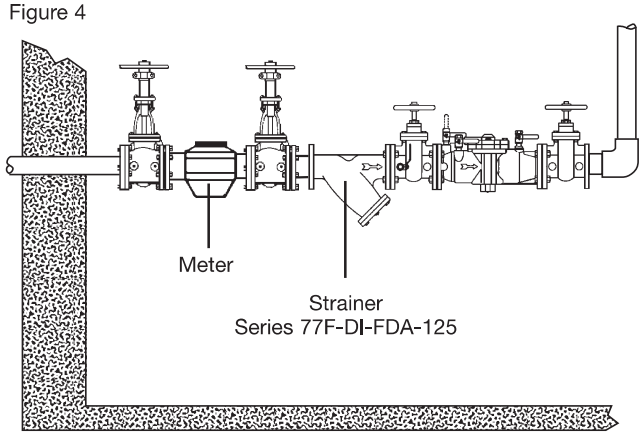

2½", 3" 007 / LF007

Outside Building Above Ground -

Figure 5

In an area where freezing conditions do not occur, Series 007 and LF007 can be installed outside of a building. The most satisfactory installation is above ground and should be installed in this manner whenever possible. In an area where freezing conditions can occur, Series 007 and LF007 should be installed above ground in an insulated enclosure.

Annual inspection of all water system safety and control valves is required and necessary. Regular inspection, testing and cleaning assures maximum life and proper product function.

Figure 5

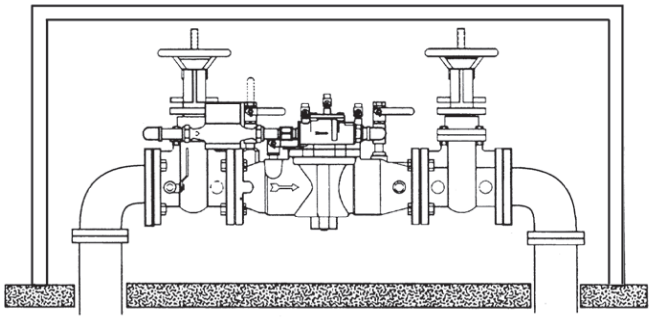

WattsBox Insulated Enclosures
Available in Aluminum or Fiberglass.
For more information, send for ES-WB.

Parallel - Figure 6

Consult Local codes for Approval

Two or more Series 007 and LF007 smaller size valves may be piped in parallel (where approved) to serve a larger supply pipe main. This type of installation is employed whenever it is vital to maintain a continuous supply of water/where interruptions for testing and servicing would be unacceptable. It also has the advantage of providing increase capacity where needed beyond that provided by a single valve and permits testing or servicing of an individual valve without shutting down the complete line. For two valve installations the total capacity should equal or exceed that required by the system.
The quantity of valves used in parallel should be determined by the engineer's judgement based on the operating conditions of a specific installation. (See F-FC regarding flow curves)

INSTALLATION NOTE: The flange gasket bolts for the gate valves should be retightened during installation as the bolts may have loosened due to storage and shipping.

Figure 6

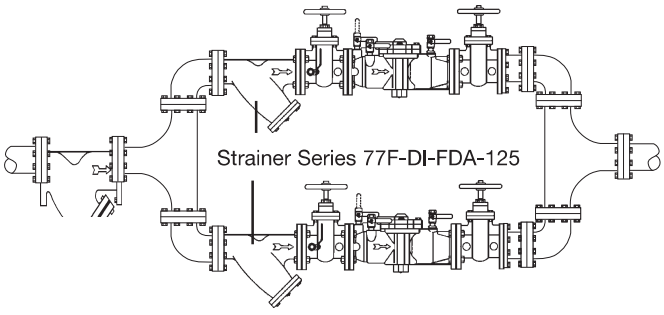

2½", 3" 007 / LF007

Servicing First and Second Check Valves

Series 007 and LF007

2½" and 3"

1. Remove cover bolts and cover.
2. Remove the retainer from the body bore. The check valve modules can now be removed from the valve by hand or with a screwdriver.
3. The check seats are attached to the cage with a bayonet type locking arrangement. Holding the cage in one hand, push the seat inward and rotate counterclock-wise against the cage. The seat, spring cage, spring and disc assembly are now individual components.
4. The disc assembly may now be cleaned and reassembled or depending on its condition, may be discarded and replaced with a new assembly from the repair kit. O-rings should be cleaned or replaced as necessary. For more information, refer to repair parts price list PL-RP-BPD.
5. Reassemble the Check valve modules. Check modules are installed in the valve body with the seats facing the valve inlet. The modules must be securely in place before the retainer can be replaced.

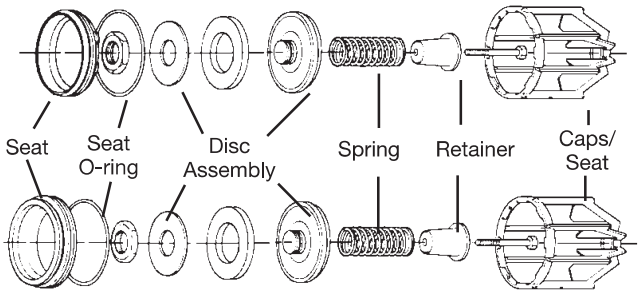

Check Assemblies

NOTE: No special tools required to service Series 007 and LF007.

Repair Kits 007 and LF007

2½" and 3"

When ordering, specify ordering code number, kit number and valve size.

	ORDERING CODE	KIT NO.	SIZE in.	SIZE mm
First Check Kit				
	0887285	RK 007 CK1	2½, 3	65, 80
LEAD FREE*	0794006	LFRK 007 CK1	2½, 3	65, 80
Kit Includes: Seat, seat o-ring, disc assembly, spring, spring retainer, check cage and cover o-ring.				
Second Check Kit				
	0887286	RK 007 CK2	2½, 3	65, 80
LEAD FREE*	0794008	LFRK 007 CK2	2½, 3	65, 80
Kit Includes: Seat, seat o-ring, disc assembly, spring, spring retainer, check cage and cover o-ring.				
Complete Rubber Parts				
	0887287	RK 007 RT	2½, 3	65, 80
Kit Includes: Two seat discs, two seat o-rings, two cover o-rings.				
Cover Kit				
LEAD FREE*	0887288	RK 007 C	2½, 3	65, 80
Kit includes: Cover and cover o-ring.				
Seat Kit				
LEAD FREE*	0887289	RK 007 S	2½, 3	65, 80
	0887280	RK 007 S2	2½, 3	65, 80
Kit Includes: Seat and seat o-ring.				

"Use only original equipment manufactured parts to protect the validated warranty."

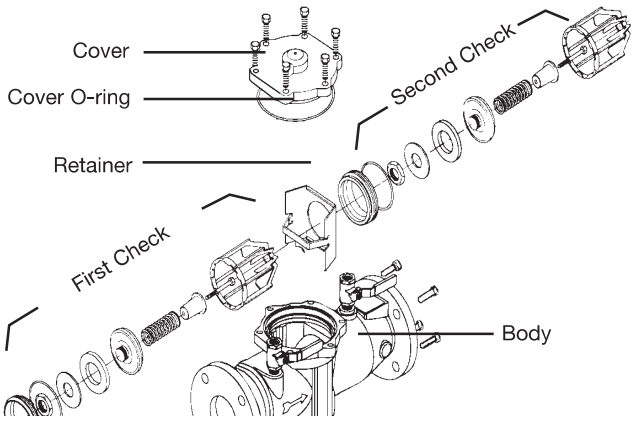

***The wetted surface of this product contacted by consumable water contains less than 0.25% of lead by weight.**

Troubleshooting Guide

Series 007 and LF007

Symptom	Cause	Solution
1. Check valve fails to hold 1.0 PSID minimum	a. Debris on check disc sealing surface	Disassemble and clean
	b. Leaking gate valve	Disassemble and clean or repair
	c. Damaged seat disc or seat o-ring	Disassemble and replace
	d. Damaged guide holding check open	Disassemble clean or replace
	e. Weak or broken spring	Disassemble and replace spring
2. Chatter during flow conditions	a. Worn, damaged or defective guide	Disassemble and repair or replace guide
3. Low flows passing through mainline valve	a. Mainline check fouled	Disassemble and clean
	b. Meter strainer plugged	Disassemble and clean
	c. Damaged mainline seat disc or seat	Disassemble and replace
	d. Broken mainline spring	Disassemble and replace

For additional cross-connection control information, send for F-50 brochure.

For additional information, visit our web site at: www.watts.com

CALIFORNIA PROPOSITION 65 WARNING

WARNING: This product contains chemicals known to the State of California to cause cancer and birth defects or other reproductive harm.

(California law requires this warning to be given to customers in the State of California.)

For more information: www.watts.com/prop65

Limited Warranty: Watts Regulator Co. (the "Company") warrants each product to be free from defects in material and workmanship under normal usage for a period of one year from the date of original shipment. In the event of such defects within the warranty period, the Company will, at its option, replace or recondition the product without charge.

THE WARRANTY SET FORTH HEREIN IS GIVEN EXPRESSLY AND IS THE ONLY WARRANTY GIVEN BY THE COMPANY WITH RESPECT TO THE PRODUCT. THE COMPANY MAKES NO OTHER WARRANTIES, EXPRESS OR IMPLIED. THE COMPANY HEREBY SPECIFICALLY DISCLAIMS ALL OTHER WARRANTIES, EXPRESS OR IMPLIED, INCLUDING BUT NOT LIMITED TO THE IMPLIED WARRANTIES OF MERCHANTABILITY AND FITNESS FOR A PARTICULAR PURPOSE.

The remedy described in the first paragraph of this warranty shall constitute the sole and exclusive remedy for breach of warranty, and the Company shall not be responsible for any incidental, special or consequential damages, including without limitation, lost profits or the cost of repairing or replacing other property which is damaged if this product does not work properly, other costs resulting from labor charges, delays, vandalism, negligence, fouling caused by foreign material, damage from adverse water conditions, chemical, or any other circumstances over which the Company has no control. This warranty shall be invalidated by any abuse, misuse, misapplication, improper installation or improper maintenance or alteration of the product.

Some States do not allow limitations on how long an implied warranty lasts, and some States do not allow the exclusion or limitation of incidental or consequential damages. Therefore the above limitations may not apply to you. This Limited Warranty gives you specific legal rights, and you may have other rights that vary from State to State. You should consult applicable state laws to determine your rights. **SO FAR AS IS CONSISTENT WITH APPLICABLE STATE LAW, ANY IMPLIED WARRANTIES THAT MAY NOT BE DISCLAIMED, INCLUDING THE IMPLIED WARRANTIES OF MERCHANTABILITY AND FITNESS FOR A PARTICULAR PURPOSE, ARE LIMITED IN DURATION TO ONE YEAR FROM THE DATE OF ORIGINAL SHIPMENT.**

WATTS®

ISO 9001-2008 CERTIFIED

A Watts Water Technologies Company

USA: Tel: (978) 688-1811 • Fax: (978) 794-1848 • www.watts.com

Canada: Tel: (905) 332-4090 • Fax: (905) 332-7068 • www.wattscanada.ca

RP/IS-007 1145 EDP# 1915216

© 2012 Watts

Section 3.7.8

Sink Pump

Pump Specifications

404 Series Drain Pump

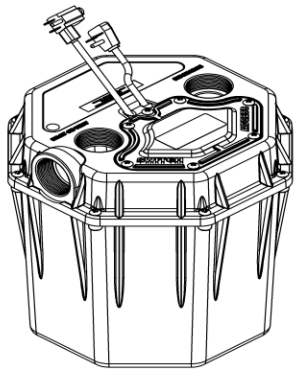

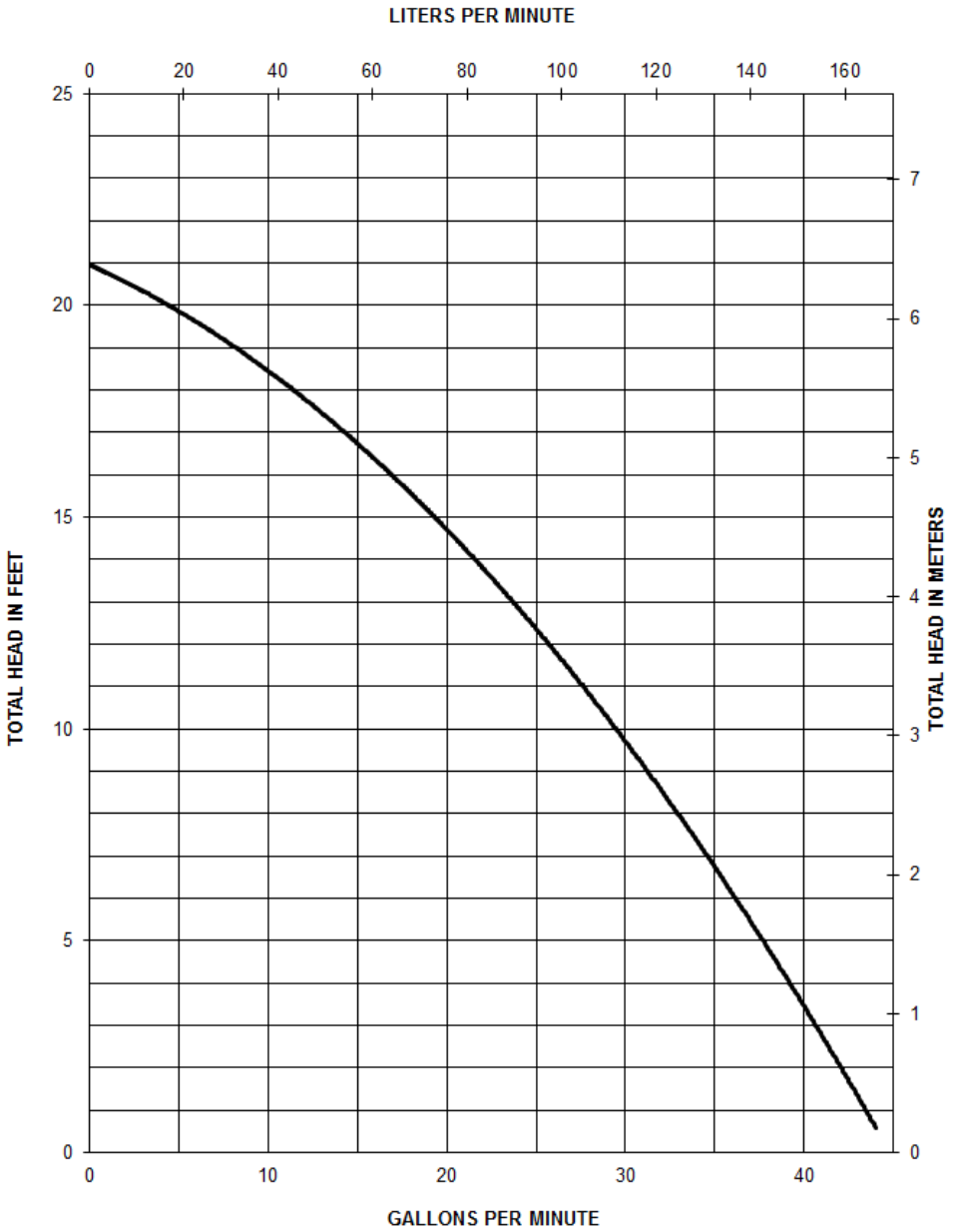

©Copyright 2017 Liberty Pumps Inc. All rights reserved. Specifications subject to change without notice.

404-Series Dimensional Data

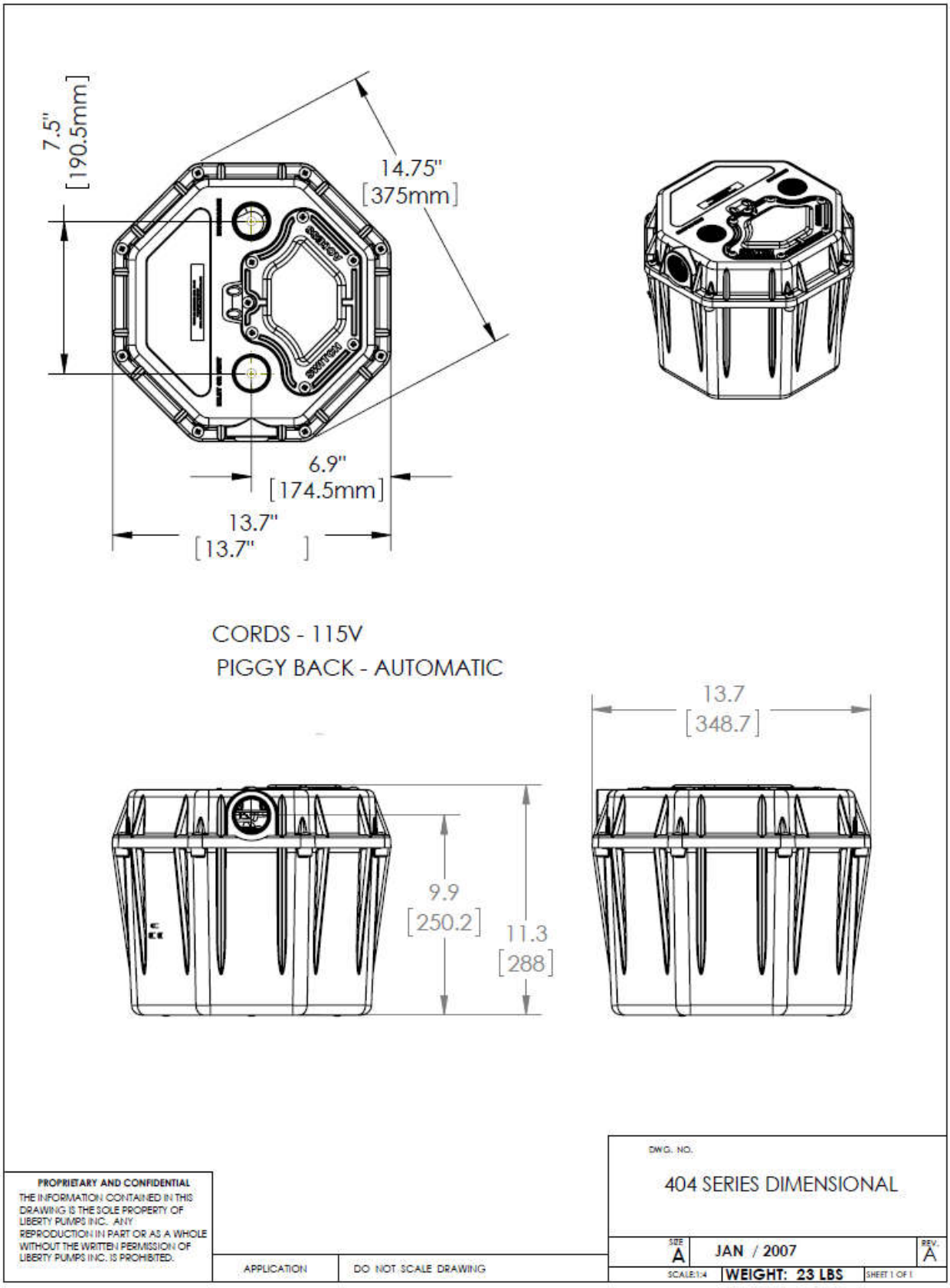

©Copyright 2017 Liberty Pumps Inc. All rights reserved. Specifications subject to change without notice.

404-Series Data

MODEL	HP	VOLTAGE	PH.	FULL LOAD AMPS	LOCKED ROTOR AMPS	THERMAL OVERLOAD TEMP	STATOR WINDING CLASS	CORD LENGTH FT.	DISCHARGE	AUTOMATIC	ALARM	CHECK VALVE
404	1/3	115	1	5.2	8	105˚C / 221°F	B	10	1 1/2”	YES		
404CV	1/3	115	1	5.2	8	105˚C / 221°F	B	10	1 1/2”	YES		YES
404/A	1/3	115	1	5.2	8	105˚C / 221°F	B	10	1 1/2”	YES	YES	
404CV/A	1/3	115	1	5.2	8	105˚C / 221°F	B	10	1 1/2”	YES	YES	YES
404/A-EYE	1/3	115	1	5.2	8	105˚C / 221°F	B	10	1 1/2”	YES	YES NIGHTEYE®	
404CV/A-EYE	1/3	115	1	5.2	8	105˚C / 221°F	B	10	1 1/2”	YES	YES NIGHTEYE®	YES
404L	1/3	115	1	5.2	8	105˚C / 221°F	B	10	2”	YES		

404CV models are c SP us Certified to UPC and IPC requirements of ASME A112.3.4 / CSA B45.9

404-Series Technical Data

IMPELLER	VORTEX HIGH TEMPERATURE ENGINEERED POLYMER
SOLIDS HANDLING	3/8”
PAINT (PUMP)	POWDER COAT
MAX LIQUID TEMP	40˚C / 104˚F CONTINUOUS, 60˚C / 140˚F INTERMITTENT
MAX STATOR TEMP	CLASS B 130˚C/ 266˚F
THERMAL OVERLOAD	105˚C / 221°F
POWER CORD TYPE	SJTW
MOTOR HOUSING	DEEP FINNED POWDER COATED ALUMINUM
VOLUTE	ENGINEERED POLYMER
SHAFT	STAINLESS
HARDWARE	STAINLESS
ORINGS	BUNA N
SHAFT SEAL	ENGINEERED DOUBLE LIP WITH STAINLESS SPRINGS
WEIGHT	13 LBS
TANK MATERIAL	POLYPROPYLENE
INLET SIZE	11/2” FEMALE NPT (2” FEMALE NPT on 404L)
DISCHARGE SIZE	11/2” FEMALE NPT (2” FEMALE NPT on 404L)
VENT SIZE	11/2” FEMALE NPT (2” FEMALE NPT on 404L)

©Copyright 2017 Liberty Pumps Inc. All rights reserved. Specifications subject to change without notice.

404-Series Specifications

1.01 GENERAL:

The contractor shall provide labor, material, equipment, and incidentals required to provide_____(QTY) commercial drain pumps as specified herein. The pump models covered in this specification are Series 404 single phase pumps. The pump furnished for this application shall be model _____as manufactured by Liberty pumps, and have a maximum fluid temperature rating of 140 degrees F.

2.01 OPERATING CONDITIONS:

Each drain pump shall be rated at 1/3 hp_____volts, single phase, 60 Hz. 3450 RPM. The unit shall produce_____G.P.M. at_____ feet of total dynamic head.

The drain pump shall be capable of handling effluent with 3/8" solid handling capability. The drain pump shall have a shut-off head of 21 feet and a maximum flow of 38 GPM @ 5 feet of total dynamic head.

The pump shall be controlled with a piggy back style on/off float switch.

3.01 CONSTRUCTION:

Each drain pump shall be equal to the Series 404 with c SA us Certified pump as manufactured by Liberty Pumps, Bergen NY. The motor housing shall be constructed of a deep finned powder coated aluminum. The motor housing shall be oil filled to dissipate heat. Air filled motors shall not be considered equal since they do not properly dissipate heat from the motor. All mating parts shall be machined and sealed with a Buna-N O-ring. All fasteners exposed to the liquid shall be stainless steel. The motor shall be protected on the top side with sealed cord entry plate with molded pins to conduct electricity eliminating the ability of water to enter internally through the cord. The motor shall be protected on the lower side with an engineered double lip seal with stainless steel springs. The tank shall be made of polypropylene.

4.01 ELECTRICAL POWER CORD

The drain pump shall be supplied with 10 feet of multiconductor power cord. It shall be cord type SJTW, capable of continued exposure to the pumped liquid. The power cord shall be sized for the rated full load amps of the pump in accordance with the National Electric Code. The power cable shall not enter the motor housing directly but will conduct electricity to the motor by means of a water tight compression fitting cord plate assembly, with molded pins to conduct electricity. This will eliminate the ability of water to enter internally through the cord, by means of a damaged or wicking cord.

5.01 MOTORS

Single phase motors shall be oil filled, permanent split capacitor, class B insulated, NEMA B design, rated for continuous duty. At maximum load the winding temperature shall not exceed 130 degrees C unsubmerged. Since air filled motors are not capable of dissipating heat they shall not be considered equal. The pump motor shall have an integral thermal overload switch in the windings for protecting the motor. The capacitor circuit shall be mounted internally in the pump.

6.01 BEARINGS AND SHAFT

Upper and lower ball bearings shall be required. The bearings shall be a single ball / race type bearing. Both bearings shall be permanently lubricated by the oil, which fills the motor housing. The motor shaft shall be made of 300 or 400 series stainless steel and have a minimum diameter of .311".

©Copyright 2017 Liberty Pumps Inc. All rights reserved. Specifications subject to change without notice.

7.01 SEALS

The pump shall have an engineered double lip seal with stainless steel springs. The motor plate / housing interface shall be sealed with a Buna-N o-ring.

8.01 IMPELLER

The impeller shall be molded engineered polymer, with pump out vanes on the back shroud to keep debris away from the seal area. It shall be threaded to the motor shaft.

9.01 CONTROLS

All units are supplied with CSA and UL approved automatic wide angle tilt float switches. The switches shall be equipped with piggy back style plug that allows the pump to be operated manually without the removal of the pump in the event that a switch becomes inoperable. The switches shall be mounted under a separately sealed access cover and tethered to a removable stainless steel rod for easy removal and serviceability.

10.01 PAINT

The exterior of the casting shall be protected with powder coat paint.

11.01 SUPPORT

The polyolefin tank shall be a free standing unit.

12.01 SERVICEABILTY

Components required for the repair of the pump shall be shipped within a period of 24 hours.

13.01 TESTING

The pump shall have a ground continuity check and the motor chamber shall be Hi-potted to test for electrical integrity, moisture content and insulation defects. The motor and volute housing shall be pressurized, and an air leak decay test is performed to ensure integrity of the motor housing. The pump shall be run, voltage current monitored, and the tester checks for noise or other malfunction.

14.01 QUALITY CONTROL

The pump shall be manufactured in an ISO 9001 certified Facility.

15.01 WARRANTY

Standard limited warranty shall be 3 years.

©Copyright 2017 Liberty Pumps Inc. All rights reserved. Specifications subject to change without notice.

Liberty Pumps®

A Family and Employee Owned Company

Installation **Manual**

7212000F

Automatic Drain Pumps

Models



404

1/3 hp Residential 115V

404

404/A
- *with Alarm*

404/A-EYE
- *with NightEye® Alarm*

404CV
- *with Check Valve*

404CV/A
- *with Check Valve and Alarm*

404CV/A-EYE
- *with Check Valve and NightEye® Alarm*

404L
- *with Larger Ports*

404L/A
- *with Larger Ports and Alarm*

404L/A-EYE
- *with Larger Ports and NightEye® Alarm*



405

1/2 hp Commercial High Temp 115V

405

405HV
- *High Voltage 230V*

405/A
- *with Alarm*

405/A-EYE
- *with NightEye® Alarm*

7000 Apple Tree Avenue
Bergen, NY 14416
ph: 800-543-2550
fax: 585-494-1839
www.libertypumps.com

C US
All Units Contain
Certified Pump

C US
ASME A112.3.4
CSA B45.9
Meets UPC
404CV Models Only

SSPMA CERTIFIED

Copyright © Liberty Pumps, Inc. 2018 All rights reserved.

Contents

Safety Precautions 3
Dimensions 4
Application 4
Installation 4
Operation 5
Maintenance and Troubleshooting 5
Warranty 8

Safety Guidelines

	This safety alert symbol is used in the manual and on the pump to alert of potential risk for serious injury or death.
	This safety alert symbol identifies **risk of electric shock**. It is accompanied with an instruction intended to minimize potential risk of electric shock.
	This safety alert symbol identifies **risk of fire**. It is accompanied with an instruction intended to minimize potential risk of fire.
	This safety alert symbol identifies **risk of serious injury or death**. It is accompanied with an instruction intended to minimize potential risk of injury or death.
⚠DANGER	Warns of hazards, which if not avoided, **will** result in serious injury or death.
⚠WARNING	Warns of hazards, which if not avoided, **could** result in serious injury or death.
⚠CAUTION	Warns of hazards, which if not avoided, could result in minor or moderate injury.
NOTICE	Signals an important instruction related to the pump. Failure to follow these instructions could result in pump failure or property damage.

⚠WARNING	**Read every supplied manual before using pump system. Follow all the safety instructions in manual(s) and on the pump. Failure to do so could result in serious injury or death.**
NOTICE	**Installer: manual must remain with owner or system operator/maintainer.**

Keep this manual handy for future reference.

For replacement manual, visit libertypumps.com, or contact Liberty Pumps at 1-800-543-2550.

Retain dated sales receipt for warranty.

Record information from pump nameplate:

Pump Model #: _____

Pump Serial #: _____

Manufacture Date: _____

Install Date: _____

Copyright © Liberty Pumps, Inc. 2018 All rights reserved.

Safety Precautions

⚠WARNING ⚠ RISK OF ELECTRIC SHOCK

- Accidental contact with electrically live parts, items, fluid, or water can cause serious injury or death.
- Always disconnect pump(s) from power source(s) before handling or making any adjustments to either the pump(s), the pump system, or the control panel.
- All installation and maintenance of pumps, controls, protection devices, and general wiring shall be done by qualified personnel.
- All electrical and safety practices shall be in accordance with the National Electrical Code®, the Occupational Safety and Health Administration, or applicable local codes and ordinances.
- Pump shall be properly grounded using its supplied grounding conductor. Do not bypass grounding wires or remove ground prong from attachment plugs. Failure to properly ground the pump system can cause all metal portions of the pump and its surroundings to become energized.
- Do not handle or unplug the pump with wet hands, when standing on damp surface, or in water unless wearing Personal Protective Equipment.
- Always wear dielectric rubber boots and other applicable Personal Protective Equipment (PPE) when water is on the floor and an energized pump system must be serviced, as submerged electrical connections can energize the water. Do not enter the water if the water level is higher than the PPE protection or if the PPE is not watertight.
- Do not lift or carry a pump or a float assembly by its power cord. This will damage the power cord, and could expose the electrically live wires inside the power cord.
- The electrical power supply shall be located within the length limitations of the pump power cord, and for below grade installations, it shall be at least 4 ft (1.22 m) above floor level.
- Do not use this product in applications where human contact with the pumped fluid is common (such as swimming pools, fountains, marine areas, etc.).
- Protect the power cord from the environment. Unprotected power and switch cords can allow water to wick through ends into pump or switch housings, causing surroundings to become energized.
- This pump is supplied with a grounding conductor and grounding-type attachment plug. To reduce the risk of electric shock, be certain that it is connected to a Ground Fault Circuit Interrupter (GFCI) receptacle that meets the latest requirements per UL 943 including Auto-Monitoring or Self-Test Function and Reverse Line-load Miswire Function – Repeated.

⚠WARNING ⚠ RISK OF FIRE

- Do not use an extension cord to power the product. Extension cords can overload both the product and extension cord supply wires. Overloaded wires will get very hot and can catch on fire.
- This product requires a separate, properly fused and grounded branch circuit, sized for the voltage and amperage requirements of the pump, as noted on the nameplate. Overloaded branch circuit wires will get very hot and can catch on fire.
- Explosion hazard during installation. PVC cleaners, primers, and cements can release explosive vapors. These heavier-than-air vapors can accumulate in the tank. The heat of soldering or sweating copper or other metal pipe can ignite these vapors causing a violent explosion. If the unit is to be connected to copper discharge or vent piping, all solvent-welded PVC joints must be allowed to cure a ***minimum*** of 24 hours. The access cover must be removed to allow the tank to be thoroughly ventilated prior to sweating copper pipe near the unit.
- For cord replacement: power cord must be of the same length and type as originally installed on the Liberty Pumps' product. Use of incorrect cord may lead to exceeding the electrical rating of the cord and could result in death, serious injury, or other significant failure.
- Do not use this product with or near flammable or explosive fluids such as gasoline, fuel oil, kerosene, etc. If rotating elements inside pump strike any foreign object, sparks may occur. Sparks could ignite flammable liquids.
- These pumps are not to be installed in locations classified as hazardous in accordance with the National Electric Code®, ANSI/NFPA 70.

⚠WARNING ⚠ RISK OF SERIOUS INJURY OR DEATH

- Do not modify the pump/pump system in any way. Modifications may affect seals, change the electrical loading of the pump, or damage the pump and its components.
- All pump/pump system installations shall be in compliance with all applicable Federal, State, and Local codes and ordinances.
- Do not allow children to play with the pump system.
- Do not allow any person who is unqualified, to have contact with this pump system. Any person who is unaware of the dangers of this pump system, or has not read this manual, can easily be injured by the pump system.
- Do not remove any tags or labels from the pump or its cord.
- Keep clear of suction and discharge openings. To prevent injury, never insert fingers into pump while it is connected to a power source.
- Do not use this product with flammable, explosive, or corrosive fluids. Do not use in a flammable and/or explosive atmosphere as serious injury or death could result.
- California Proposition 65 Warning: This product contains chemicals known to the State of California to cause cancer, birth defects, or other reproductive harm. For more information, go to www.p65warnings.ca.gov.

NOTICE

- **Model 404:** Do not use pumps with fluid over 140°F (60°C). Operating the pump in fluid above this temperature can overheat the pump, resulting in pump failure.
- **Model 405:** Do not use pumps with fluid over 180°F (82°C). Operating the pump in fluid above this temperature can overheat the pump, resulting in pump failure.
- Do not dispose of materials such as paint thinner or other chemicals down drains. Doing so could chemically attack and damage pump system components and cause product malfunction or failure.
- Do not use pump system with mud, sand, cement, hydrocarbons, grease, or chemicals. Pump and system components can be damaged from these items causing product malfunction or failure. Additionally, flooding can occur if these items jam the impeller or piping.
- Do not run dry.

Copyright © Liberty Pumps, Inc. 2018 All rights reserved.

Dimensions

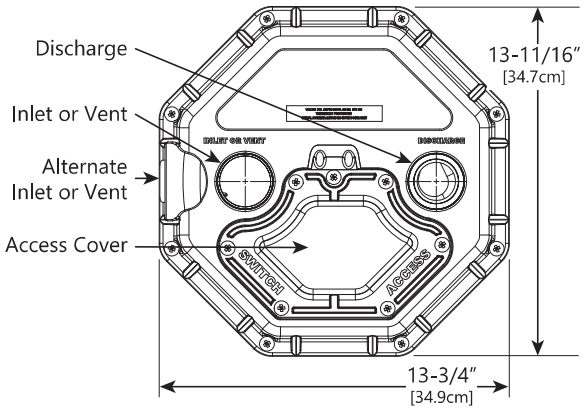

Figure 1. Model 404 and 405 Cover Dimensions

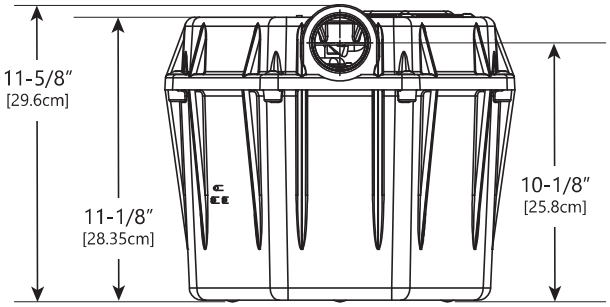

Figure 2. Model 404 Basin Dimensions

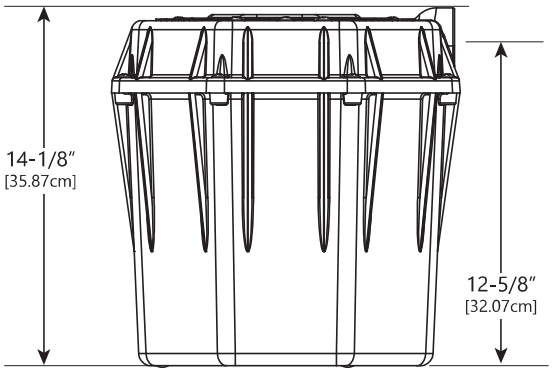

Figure 3. Model 405 Basin Dimensions

Application

The Model 404 and 405-Series drain pumps are designed for use in gray wastewater applications. They will handle small debris and solids, such as laundry lint (up to 3/8″), associated with normal gray water drainage from a sink. Larger solids should be kept out of the pump system. The 405-Series is designed for commercial applications where higher temperature drain water (up to 180°F) may be used.

Installation

Inlet

The drain pump has two available ports: one on the top, the other on the side. Either can be used as a vent or inlet. Using the appropriate piping (1-1/2″ on 404 and 404CV models and 2″ on 404L and all 405 models), connect the fixture (i.e., laundry tub, basement sink, washing machine) to the pump. Refer to Figure 4 for a typical installation.

NOTICE

- **Hand-tighten only**
- **Do not cross thread**

A trap shall be used between the fixture and pump; a flange type is recommended. Hand-tighten trap to pump.

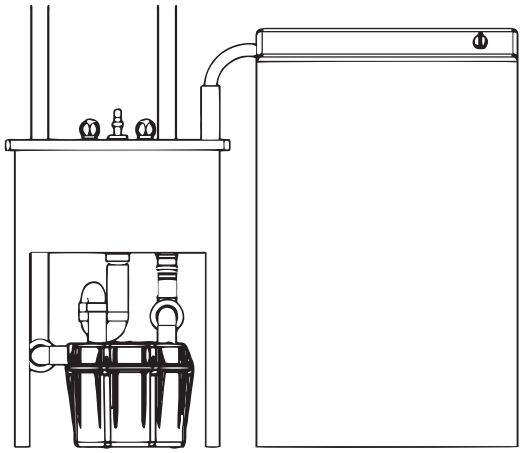

Figure 4. Typical Residential Installation

Discharge

NOTICE

- **Hand-tighten only**
- **Use appropriate thread sealing tape**
- **Do not cross thread**

Install a union just above the pump to facilitate removal, if necessary, for cleaning or service. Install a check valve (**not included** except for CV models listed below) just above the union and as close to the pump as possible to prevent the backflow of water after each pump cycle.

Check Valve for CV Models

Models 404/CV, 404CV/A, and 404CV/A-EYE come with a check valve in order to meet ASME A112.3.4/CSA B45.9. This check valve must be threaded into the discharge port of the 404 cover.

Vent

NOTICE

- **Hand-tighten only**
- **Do not cap-off vent**
- **Do not use one-way quick-vents or air admittance valves** as they will not guarantee proper fixture performance

Provision is made for a vent stack to allow extra volume for high suds conditions, and to ensure proper drainage of the fixture. The vent pipe should have a union to facilitate removal, if required, and shall be connected directly to a building or house vent.

Copyright © Liberty Pumps, Inc. 2018 All rights reserved.

Inlet Air Hole (Alarm Units Only)

If the top port (hole) is used for the vent, the potential exists for an air pocket to form that would prevent the alarm float from activating. After the vent pipe has been installed, it is recommended that a 1/8" hole is drilled through both the unit and vent pipe to allow air to escape. Refer to Figure 5.

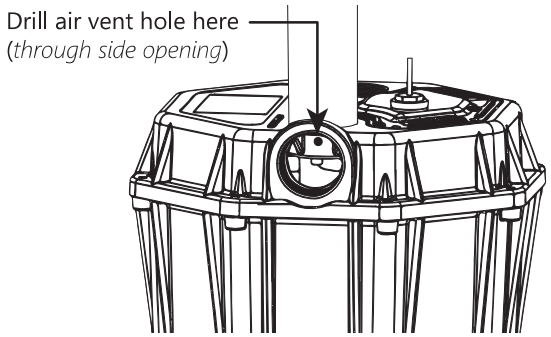

Figure 5. Air Vent Hole Location (Alarm units only)

Power Cord

⚠WARNING **RISK OF ELECTRIC SHOCK**

- All electrical and safety practices shall be in accordance with the National Electrical Code®, the Occupational Safety and Health Administration, or applicable local codes and ordinances.
- Always disconnect pump(s) from power source(s) before handling or making any adjustments to either the pump(s), the pump system, or the control panel.
- Pump shall be properly grounded using its supplied grounding conductor. Do not bypass grounding wires or remove ground prong from attachment plugs. Failure to properly ground the pump system can cause all metal portions of the pump and its surroundings to become energized.
- The electrical power supply shall be located within the length limitations of the pump power cord, and for below grade installations, it shall be at least 4 ft (1.22 m) above floor level.

⚠WARNING **RISK OF FIRE**

- Do not use an extension cord to power the product. Extension cords can overload both the product and extension cord supply wires. Overloaded wires will get very hot and can catch on fire.

The pump power cord is equipped with a grounding-type 3-prong plug. It must be connected to a separately fused, grounded, 3-wire grounding-type receptacle of 15-amp capacity with the proper pump voltage (all models are 115V, except the 405HV which is 230V). Refer to the pump nameplate to verify electrical specifications.

Alarm

Models 404 and 405 with /A or /A-EYE come with a Liberty Pumps alarm. For instructions on using this alarm, refer to the included alarm manual.

Operation

The Model 404 and 405-Series pumps come factory-equipped with a float switch mounted in the tank. There are two controlling cords—one to the float switch (float switch shown in Figure 7) and the other to the pump motor. The float switch cord has a series (piggyback) plug enabling the pump motor cord to be plugged into the back of it (see Figure 6). The purpose of this design is to allow temporary manual operation of the pump.

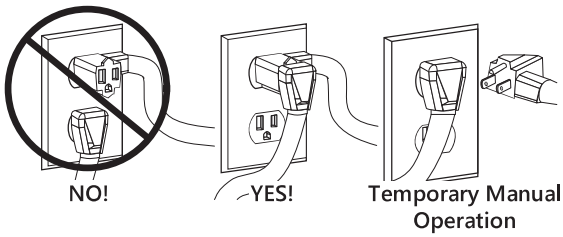

Figure 6. Piggyback Plug Installation

For automatic operation using Liberty Pumps' supplied switch, the two cords must be interconnected and plugged into a separately fused, grounded outlet.

For manual operation, or in the event of switch failure, the pump cord can be separated and plugged into the electrical outlet, directly bypassing the switch. **Note:** Model 405HV should only be operated without the float switch by using the circuit breaker or panel disconnect.

Maintenance and Troubleshooting

⚠WARNING **RISK OF ELECTRIC SHOCK**

- Always disconnect pump(s) from power source(s) before handling or making any adjustments to either the pump(s), the pump system, or the control panel.

Each unit is individually factory-tested to ensure proper adjustment and operation. If the unit fails to operate properly, re-read the instructions to verify they have been followed correctly. Replacement parts for this product are available at http://www.libertypumps.com/Services/Replacement-Parts.

Routine maintenance is not required on the pump itself, but associated connections may require occasional attention. Lint and foreign objects should be removed from the trap periodically. The check valve on the discharge should also be checked for freedom of operation at the same time.

The pump is automatically turned on and off by use of a float switch mounted within the tank. This switch can be easily removed and checked for operation by removing the access cover located on top of the unit. Once the access cover has been removed, a rubber plug must be lifted to free up the switch cord. The switch is mounted to a rod which can be removed by lifting or pulling upward.

IMPORTANT: Do not adjust the tether length (*tether length is the distance of cord measured between the clamp and top of float switch*). If replacing the switch, make sure to maintain the correct tether length for the model. Refer to Figure 7.

Copyright © Liberty Pumps, Inc. 2018 All rights reserved.

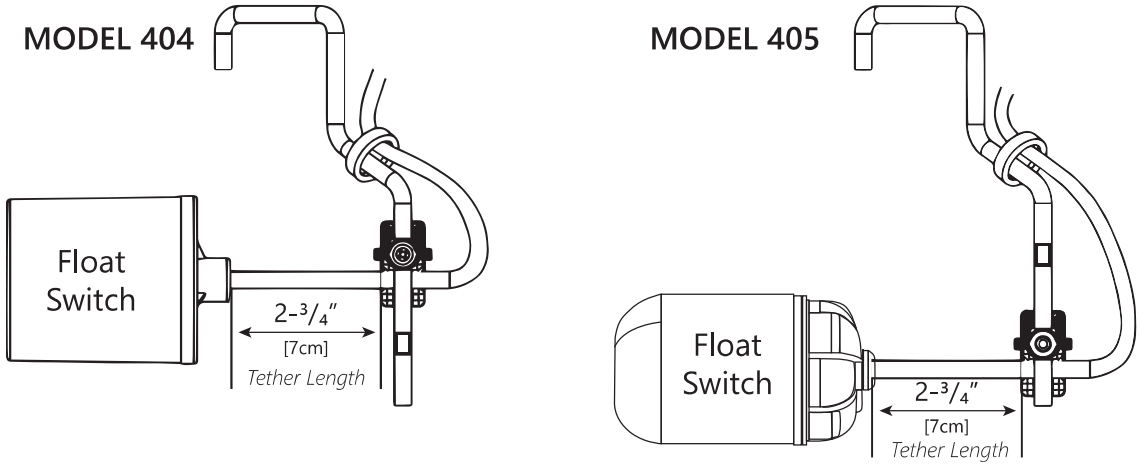

Figure 7. Pump Float Switch and Tether Length

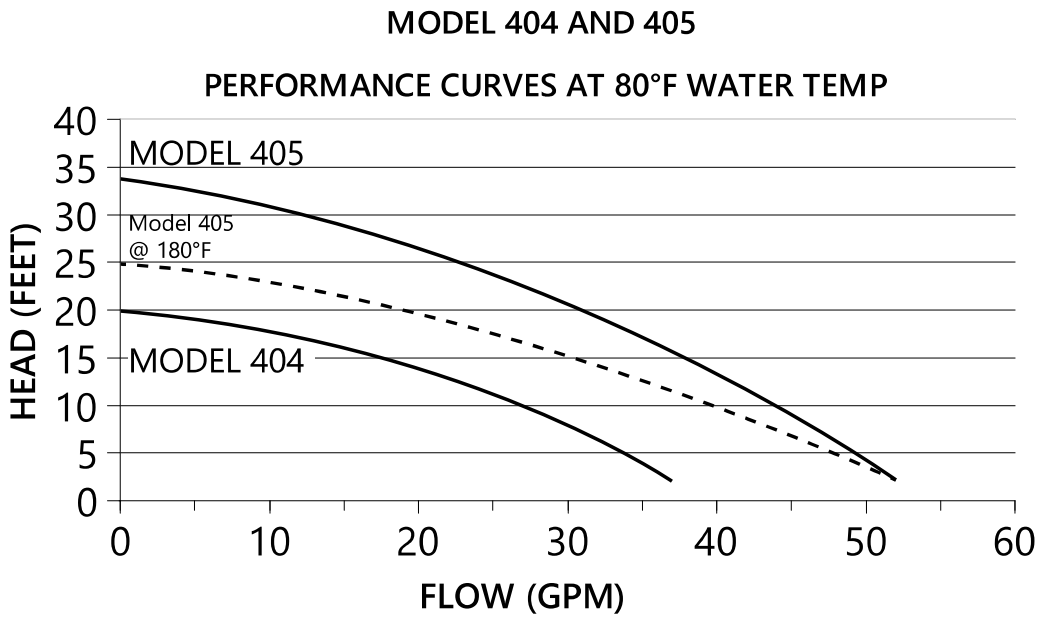

Figure 8. Performance Curves for Models 404 and 405

Copyright © Liberty Pumps, Inc. 2018 All rights reserved.

Table 1. Troubleshooting Matrix

Problem	Possible Cause	Correction
Pump will not turn on or shut off.	Tripped circuit breaker, tripped GFCI, blown fuse, or other interruption of power.	Reset tripped circuit breaker, reset GFCI, replace blown fuse with properly sized fuse, check that the unit is securely plugged in, investigate power interruption.
	Improper voltage.	Have an electrician check all wiring for proper connections and adequate capacity.
	Plugged vent, or quick-vent in use.	Verify that an unrestricted vent at least 1-¼" in diameter is in use. ***Quick-vents shall not be used.***
	Defective float switch or build-up on tank wall restricting free movement of float switch.	*****Remove access cover and check that float is free to move. If build-up restricts float, clean and reinstall. If defective, replace switch.
Pump runs or hums but does not pump.	Discharge is blocked or restricted.	Check the discharge line for blockage, including ice if the line passes through or into cold areas.
	Check valve is stuck closed or installed wrong.	Remove and examine for freedom of operation and proper installation.
	Total head (lift height) has been reached (refer to Figure 8)	Try routing pipe to a lower level. If not possible, another pumping station may be required at a level of roughly half the total head (lift).
	Pump impeller is jammed.	*****Disassemble unit to expose pump impeller. Remove foreign material. Reassemble.
	Trap or inlet piping is clogged.	Check the trap and inlet piping for restrictions.
Pump short-cycles.	Plugged vent, or quick-vent in use.	Verify that an unrestricted vent at least 1-¼" in diameter is in use. ***Quick-vents shall not be used.***
	Defective float switch.	*****Remove access cover and check that float is free to move. If build-up restricts float, clean and reinstall. If defective, replace switch.
	Check valve was not installed, is stuck open, or is leaking.	Remove and examine for freedom of operation and proper installation.
Pump runs periodically when fixtures are not in use.	Check valve was not installed, is stuck open, or is leaking.	Remove and examine for freedom of operation and proper installation.
	Faucets are dripping.	Repair faucets to eliminate dripping.
Water or soap suds come out of vent pipe.	Vent pipe is too short or too small in diameter.	Verify that an unrestricted vent at least 1-¼" in diameter is in use.
	Defective float switch.	*****Remove tank cover and check that float is free to move. If build-up restricts float, clean and reinstall. If defective, replace switch.
	Rate of inflow exceeds pump output.	Use valve on the inlet to reduce rate of inflow.
Pump operates noisily.	Foreign objects in impeller cavity.	*****Disassemble unit to expose pump impeller. Remove foreign material. Reassemble.
	Piping to house structure is too rigid.	Replace a portion of the discharge pipe with rubber hose to absorb noise.

*****NOTE: Liberty Pumps, Inc. assumes no responsibility for damage or injury due to disassembly beyond float removal in the field. Disassembly, other than at Liberty Pumps or its authorized service centers, automatically voids warranty.

Copyright © Liberty Pumps, Inc. 2018 All rights reserved.

Warranty

Liberty Pumps Wholesale Products Limited Warranty

Liberty Pumps, Inc. warrants that Liberty Pumps wholesale products are free from all factory defects in material and workmanship for a period of three (3) years from the date of purchase (excluding batteries). The date of purchase shall be determined by a dated sales receipt noting the model and serial number of the pump. The dated sales receipt must accompany the returned pump if the date of return is more than three years from the date of manufacture noted on the pump nameplate.

The manufacturer's sole obligation under this Warranty shall be limited to the repair or replacement of any parts found by the manufacturer to be defective, provided the part or assembly is returned freight prepaid to the manufacturer or its authorized service center, and provided that none of the following warranty-voiding characteristics are evident:

The manufacturer shall not be liable under this Warranty if the product has not been properly installed, operated, or maintained per manufacturer instructions; if it has been disassembled, modified, abused, or tampered with; if the electrical cord has been cut, damaged, or spliced; if the pump discharge has been reduced in size; if the pump has been used in water temperatures above the advertised rating; if the pump has been used in water containing sand, lime, cement, gravel, or other abrasives; if the product has been used to pump chemicals, grease, or hydrocarbons; if a non-submersible motor has been subjected to moisture; or if the label bearing the model and serial number has been removed.

Liberty Pumps, Inc. shall not be liable for any loss, damage, or expenses resulting from installation or use of its products, or for indirect, incidental, and consequential damages, including costs of removal, reinstallation or transportation.

There is no other express warranty. All implied warranties, including those of merchantability and fitness for a particular purpose, are limited to three years from the date of purchase. This Warranty contains the exclusive remedy of the purchaser, and, where permitted, liability for consequential or incidental damages under any and all warranties are excluded.

Liberty Pumps®

7000 Apple Tree Avenue
Bergen, NY 14416
ph: 800-543-2550
fax: 585-494-1839
www.libertypumps.com

Copyright © Liberty Pumps, Inc. 2018 All rights reserved.

Section 3.7.9

Temperature Switch

Section 3.7.9.1

Temperature Switch – Explosion Proof

SERIES TTE | EXPLOSION-PROOF RTD TEMPERATURE TRANSMITTER



BENEFITS/FEATURES

- **FM approved for Class I, Groups B, C, D; Class II, Groups E, F, G classified explosive environments**
- **Optional LCD**
- **Output span selected from seven common ranges or user determined**

APPLICATIONS

- Explosive process environments
- Offshore HVAC monitoring

DESCRIPTION

The **Series TTE Explosion-Proof RTD Temperature Transmitter** is the ideal product for hazardous temperature measurement applications. The TTE series has seven pre-programmed temperature ranges that are selectable via an internal dip switch. For those applications that need a custom range, the transmitter can be easily configured for any range between -30 to 250°F with a minimum span of 40°F. The span and zero can be quickly adjusted with a simple push button design. The compact housing allows for the transmitter to be mounted in virtually any application.

SPECIFICATIONS

Temperature Sensor	Pt1000, 0.00385 DIN.
Output Temperature Ranges	User selectable – any range between -30 to 250°F with a minimum span of 40°F.
Temperature Limits	Ambient: 0 to 158°F (-18 to 70°C); Process: -30 to 250°F (-34.4 to 121.1°C).
Accuracy	Transmitter ±0.1% FS; Probe ±0.3% FS.
Thermal Drift Effects	±0.02%/°C max.
Response Time	250 ms.
Wetted Materials	316 SS.
Process Connection	1/2″ male NPT.
Conduit Connection	1/2″ female NPT.
Probe Length	2″ to 18″ (depending on model).
Pressure Limits	2000 psi (137.9 bar).
Power Requirements	10-35 VDC.
Output Signal	4-20 mA (2-wire loop powered).
Optional Display	2 lines X 8 character LCD.
Enclosure Rating	Weatherproof NEMA 4X (IP66) and Explosion-proof. Listed with FM for Class I, Division 1, Groups B, C and D, and dust-ignitionproof for Class II, Division 1, Groups E, F and G and Class III atmospheres.
Weight	2 lb 8 oz (1134 g).
Agency Approvals	CE, FM.

DIMENSIONS

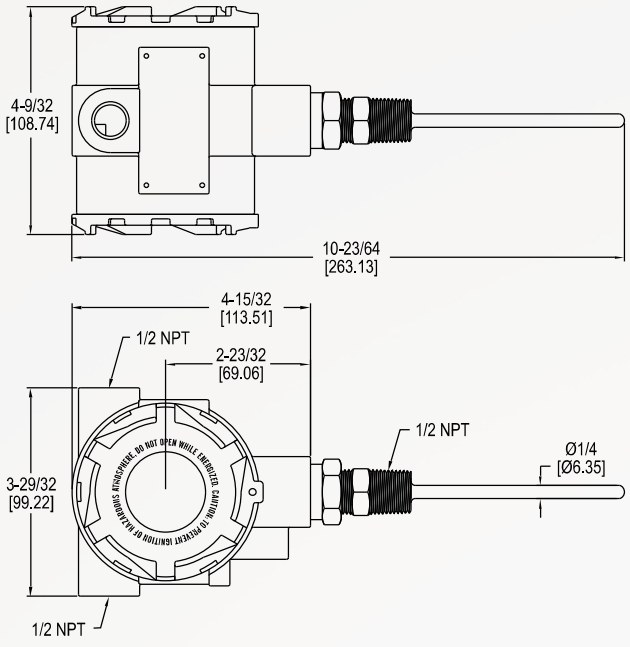

HOW TO ORDER

Use the **bold** characters from the chart below to construct a product code.

TTE **-1** **04-W** **-LCD**

SERIES
TTE: Explosion-proof RTD temperature transmitter

APPROVALS
-1: Explosion-proof

02-W: 2"

STEM LENGTH
-04-W: 4″
-06-W: 6″
-09-W: 9″
-12-W: 12″
-15-W: 15″
-18-W: 18″

OPTION
-LCD: LCD display
-BSPT: 3/4″ BSPT process connection
-C5: C5-M housing paint specification
-M20: Female M20 thd electrical connection

ACCESSORIES

Model	Description
A-287	Mounting bracket for pipe or surface mounting

ORDER ONLINE TODAY!

dwyer-inst.com/Product/SeriesTTE

DWYER INSTRUMENTS, INC.

©Copyright 2021 Dwyer Instruments, Inc.
Printed in U.S.A. 3/21

DS-TTE Rev. 1

Important Notice: Dwyer Instruments, Inc. reserves the right to make changes to or discontinue any product or service identified in this publication without notice. Dwyer advises its customers to obtain the latest version of the relevant information to verify, before placing any orders, that the information being relied upon is current.

Dwyer

SERIES TTE

EXPLOSION-PROOF RTD TEMPERATURE TRANSMITTER

User Selectable Ranges, Optional LCD Display



*Shown with optional LCD display

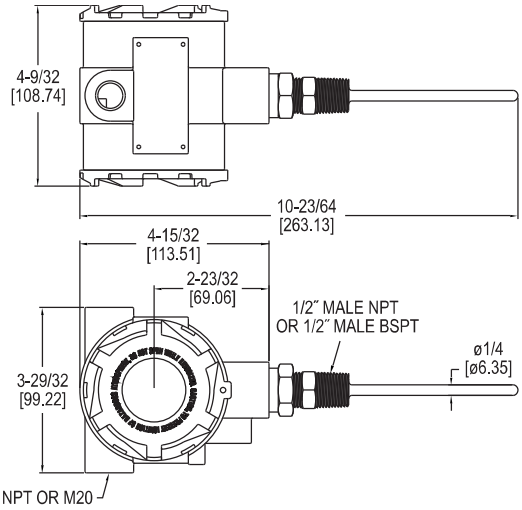

The **Series TTE Explosion-Proof RTD Temperature Transmitter** is the ideal product for hazardous temperature measurement applications. The TTE series has seven pre-programmed temperature ranges that are selectable via an internal dip switch. For those applications that need a custom range, the transmitter can be easily configured for any range between -30 to 250°F with a minimum span of 40°F. The span and zero can be quickly adjusted with a simple push button design. This unit has optional listings of FM for use in Class I, Division 1, Groups B, C and D, Class II, Division 1, Groups E, F and G and Class III atmospheres or ATEX (Directive 2014/34/EU) for CE Ex II 2 G Ex db IIC T6...T4 Gb (-20°C ≤ Ta ≤ + 70°C), CE Ex II 1 D Ex ta IIIC T111°C Da (-20°C ≤ Ta ≤ + 70°C) and IECEx for Ex db IIC T6...T4 Gb (-20°C ≤ Ta ≤ + 70°C), Ex ta IIIC T111°C Da (-20°C ≤ Ta ≤ + 70°C). The compact housing allows for the transmitter to be mounted in virtually any application.

FEATURES/BENEFITS

- FM approved for Class I, Groups B, C, D; Class II, Groups E, F, G classified explosive environments
- Optional LCD
- Output span selected from seven common ranges or user determined

APPLICATIONS

- Explosive process environments
- Offshore HVAC monitoring

SPECIFICATIONS

Temperature Sensor: Pt1000, 0.00385 DIN.
Output Temperature Ranges: User selectable – any range between -30 to 250°F with a minimum span of 40°F.
Temperature Limits: Ambient: -4 to 158°F (-20 to 70°C); Process: -30 to 250°F (-34.4 to 120°C).
Accuracy: Transmitter ±0.1% FS; Probe ±0.3% FS.
Thermal Drift Effects: ±0.02%/°C max.
Response Time: 250 ms.
Wetted Materials: 316 stainless steel.
Process Connection: 1/2″ male NPT or 1/2 male BSPT.
Conduit Connection: 1/2″ female NPT or M20.
Probe Length: 2″ to 18″ (depending on model).
Pressure Limits: 2000 PSI.
Power Requirements: 10 to 35 VDC.
Output Signal: 4-20 mA (two wire loop powered).
Optional Display: 2 lines X 8 character LCD.
Enclosure Rating: Weatherproof and Explosion-proof. Listed with FM for Class I, Division 1, Groups B, C and D, and dust-ignitionproof for Class II, Division 1, Groups E, F and G and Class III atmospheres.
ATEX Certified: CE 0518 Ex II 2 G Ex db IIC T6...T4 Gb, CE Ex II 1 D Ex ta IIIC T111°C Da, T6 Process Temp ≤80°C, Temperature Class T5 Process Temp ≤95°C, Temperature Class T4 Process Temp ≤120°C as defined on nameplate. EU-type Cerificate No.: EMT17ATEX0021 X.
ATEX Standards: EN 60079-0:2012+A11:2013; EN 60079-1:2015; EN 60079-31:2014.
IECEx Certified: For Ex db IIC T6...T4 Gb, Ex ta IIIC T111°C Da, T6 Process Temp ≤80°C, Temperature Class T5 Process Temp ≤95°C, Temperature Class T4 Process Temp ≤120°C as defined on nameplate.
IECEx Certificate of Conformity: Element IECEx EMT 17.0007X; IECEx Standards: IEC 60079-0:2011 (Edition 6); IEC 60079-1:2014 (Edition 7); IEC 60079-31:2013 (Edition 2).
Weight: 2 lb 8 oz (1134 g).
Agency Approvals: FM, CE, ATEX/IECEx.

MODEL CHART

Example	TTE	-1	04	-W	-LCD	TTE-104-W-LCD
Series	TTE					Explosion-proof RTD temperature transmitter
Agency		1				FM*
		2				ATEX/IECEx flameproof
Probe Length			02			2″ probe
			04			4″ probe
			06			6″ probe
			09			9″ probe
			12			12″ probe
			15			15″ probe
			18			18″ probe
Construction				W		Well probe
Options					Blank	No LCD display
					BSPT	1/2 male BSPT process connection
					C5	C5-M housing paint specification
					LCD	LCD display
					M20	Female M20 thread electrical connection

*Options that do not have ATEX and IECEx.

Attention: Units without the "2" suffix following "TTE" are not directive 2014/34/EU (ATEX) Complaint. These units are not intended for use in potentially hazardous atmospheres in the EU. These units may be CE marked for other directives of the EU.

THERMOWELLS - MACHINED

Model	Material	Length	Connection (Internal/External) (NPT)
TE-TNS-N044N-12	304 SS	4″	1/2″ / 3/4″
TE-TNS-N064N-12	304 SS	6″	1/2″ / 3/4″
TE-TNS-N094N-12	304 SS	9″	1/2″ / 3/4″
TE-TNS-N124N-12	304 SS	12″	1/2″ / 3/4″



Machined Thermowell

ACCESSORIES

Model	Description
A-287	Mounting bracket for pipe or surface mounting (Includes bracket and two 2″ U-bolts)

FIELD-SELECTABLE RANGES

40 to 90°F (4.4 to 32.2°C)
-20 to 140°F (-28.9 to 60°C)
0 to 100°F (-17.8 to 37.8°C)
30 to 240°F (-1.1 to 115.6°C)
32 to 212°F (0 to 100°C)
32 to 122°F (0 to 50°C)
-30 to 65°C (-1.1 to 18.3°C)
Custom range between -30 to 250°F (-34.4 to 121.1°C)

Section 3.7.9.2

Temperature Switch – Non-explosion Proof

EWSA Series

Rugged, Weatherproof Temperature Sensors and Transmitters

INSTRUCTION SHEET

M5732/0119

Shop online at omega.com e-mail: info@omega.com
For latest product manuals: www.omegamanual.info



1.0 Description

The EWSA air temperature sensors are designed for wall or pipe mounting in harsh indoor or outdoor environments.

A rugged 6mm diameter sheathed RTD probe is housed in the center of a 12.7 mm dia. outer protection tube. The RTD sensor terminal block or optional transmitter are housed in a tough aluminum alloy enclosure, rated to IP65.

An M20 cable gland is fitted to the left hand side of the enclosure, suitable for cables from 2.5 to 6.5 mm diameter.

2.0 Receiving and Unpacking

Please inspect the packaging and sensor thoroughly for any signs of transit damage. Please notify Omega customer service if any damage is found.

3.0 Specifications

Dimensions:
Box: 80 W x 75 H x 58 mm D
Sensors: 75 mm long x 12.7 mm O.D
Cable Entry: M20 gland for 2.5 to 6.5 O.D cable

EWSA-Pt100 Sensor Only Model:
Sensor Type:
- Pt100 class A 4-wire standard
- Pt1000 on request

Ambient Temperature Range:
- 50 to 100°C

Electrical Conection:
Screw terminal block

EWSA-Pt100-TX:
Ambient Temperature Range:
-40 to 85°C at 10 to 90% RH non condensing
Standard Transmitter Scaling:
4 mA at -25°C, 20 mA at 75°C
Electrical Connection:
Screw terminals, 2-wire
Power Supply:
10 to 30Vdc, loop powered
Power Supply:
[(V supply-10)/20] KΩ. eg. 700Ω @ 24V

4.0 Mechanical Installation

The EWSA has been designed for wall or pipe mounting.
For wall fixing the drilling dimensions are provided on the base of the enclosure.

5.0 Electrical Installation

For the EWSE-Pt100-TX temperature sensor with transmitter please refer to the transmitter manual M4561 for wiring and scaling information. The standard EWSA-Pt100 model features a 4 way screw terminal block for connection to the 4-wire Pt100 sensor.

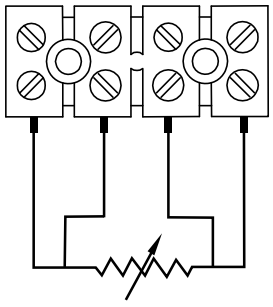

Pt100

omega.com info@omega.com

Servicing North America:

U.S.A. Headquarters:
Omega Engineering, Inc.
Toll-Free: 1-800-826-6342 (USA & Canada only)
Customer Service: 1-800-622-2378 (USA & Canada only)
Engineering Service: 1-800-872-9436 (USA & Canada only)
Tel: (203) 359-1660 Fax: (203) 359-7700
e-mail: info@omega.com

For Other Locations Visit omega.com/worldwide

The information contained in this document is believed to be correct, but OMEGA accepts no liability for any errors it contains, and reserves the right to alter specifications without notice.

WARRANTY/DISCLAIMER

OMEGA ENGINEERING, INC. warrants this unit to be free of defects in materials and workmanship for a period of **13 months** from date of purchase. OMEGA's WARRANTY adds an additional one (1) month grace period to the normal **one (1) year product warranty** to cover handling and shipping time. This ensures that OMEGA's customers receive maximum coverage on each product.

If the unit malfunctions, it must be returned to the factory for evaluation. OMEGA's Customer Service Department will issue an Authorized Return (AR) number immediately upon phone or written request. Upon examination by OMEGA, if the unit is found to be defective, it will be repaired or replaced at no charge. OMEGA's WARRANTY does not apply to defects resulting from any action of the purchaser, including but not limited to mishandling, improper interfacing, operation outside of design limits, improper repair, or unauthorized modification. This WARRANTY is VOID if the unit shows evidence of having been tampered with or shows evidence of having been damaged as a result of excessive corrosion; or current, heat, moisture or vibration; improper specification; misapplication; misuse or other operating conditions outside of OMEGA's control. Components in which wear is not warranted, include but are not limited to contact points, fuses, and triacs.

OMEGA is pleased to offer suggestions on the use of its various products. However, OMEGA neither assumes responsibility for any omissions or errors nor assumes liability for any damages that result from the use of its products in accordance with information provided by OMEGA, either verbal or written. OMEGA warrants only that the parts manufactured by the company will be as specified and free of defects. OMEGA MAKES NO OTHER WARRANTIES OR REPRESENTATIONS OF ANY KIND WHATSOEVER, EXPRESSED OR IMPLIED, EXCEPT THAT OF TITLE, AND ALL IMPLIED WARRANTIES INCLUDING ANY WARRANTY OF MERCHANTABILITY AND FITNESS FOR A PARTICULAR PURPOSE ARE HEREBY DISCLAIMED. LIMITATION OF LIABILITY: The remedies of purchaser set forth herein are exclusive, and the total liability of OMEGA with respect to this order, whether based on contract, warranty, negligence, indemnification, strict liability or otherwise, shall not exceed the purchase price of the component upon which liability is based. In no event shall OMEGA be liable for consequential, incidental or special damages.

CONDITIONS: Equipment sold by OMEGA is not intended to be used, nor shall it be used: (1) as a "Basic Component" under 10 CFR 21 (NRC), used in or with any nuclear installation or activity; or (2) in medical applications or used on humans. Should any Product(s) be used in or with any nuclear installation or activity, medical application, used on humans, or misused in any way, OMEGA assumes no responsibility as set forth in our basic WARRANTY/DISCLAIMER language, and, additionally, purchaser will indemnify OMEGA and hold OMEGA harmless from any liability or damage whatsoever arising out of the use of the Product(s) in such a manner.

RETURN REQUESTS / INQUIRIES

Direct all warranty and repair requests/inquiries to the OMEGA Customer Service Department. BEFORE RETURNING ANY PRODUCT(S) TO OMEGA, PURCHASER MUST OBTAIN AN AUTHORIZED RETURN (AR) NUMBER FROM OMEGA'S CUSTOMER SERVICE DEPARTMENT (IN ORDER TO AVOID PROCESSING DELAYS). The assigned AR number should then be marked on the outside of the return package and on any correspondence.

The purchaser is responsible for shipping charges, freight, insurance and proper packaging to prevent breakage in transit.

FOR **WARRANTY** RETURNS, please have the following information available BEFORE contacting OMEGA:

1. Purchase Order number under which the product was PURCHASED,
2. Model and serial number of the product under warranty, and
3. Repair instructions and/or specific problems relative to the product.

FOR **NON-WARRANTY** REPAIRS, consult OMEGA for current repair charges. Have the following information available BEFORE contacting OMEGA:

1. Purchase Order number to cover the COST of the repair,
2. Model and serial number of the product, and
3. Repair instructions and/or specific problems relative to the product.

OMEGA's policy is to make running changes, not model changes, whenever an improvement is possible. This affords our customers the latest in technology and engineering. OMEGA is a trademark of OMEGA ENGINEERING, INC.

© Copyright 2019 OMEGA ENGINEERING, INC. All rights reserved. This document may not be copied, photocopied, reproduced, translated, or reduced to any electronic medium or machine-readable form, in whole or in part, without the prior written consent of OMEGA ENGINEERING, INC.

Section 3.7.10

H2S & Methane Sensor

XNX™ Universal Transmitter

Honeywell





A universal transmitter for toxic, oxygen and combustible gas detection compatible with all Honeywell gas sensing technologies

Transmitter & Methane Sensor Combo

XNX Universal Transmitter





High performance
- Flammable gas detection 0 to 100% LFL/LEL
- Point IR with heated optics provides immunity to poisoning and no hidden faults
- Open-path IR flammable gas detection in LEL-m measurement
- Electrochemical cell offers toxic gas detection in ppm
- IR cell provides CO_2 and combustible gas monitoring
- Robust and reliable operation in explosive areas and harsh environments

Flexible Operation
- 3 versions - supports mV (Catalytic Bead and IR Cell), Electrochemical Cell and IR (point and open-path) gas detection
- Multi-Purpose Detector (MPD) with field serviceable mV, Catalytic bead and IR Cell capability
- 4-20mA with HART® as standard
- Multiple communications options include up to 3 relays, MODBUS® and FOUNDATION® H1 Fieldbus (pending)
- Optional local IS port for handheld HART configurator

Easy to Use
- Large, backlit, easy-to-view LCD display offers multi-sensory indicators (visual icons, colored buttons, text, etc.) to display gas and sensor readings
- User interface supported by 8 selectable languages (English, Spanish, German, Italian, Portuguese, French, Russian, Chinese)
- Self-test and fault indication features
- Non-intrusive, one-man operation
- Quick calibration with auto-inhibit

Easy to Install
- 3 or 4 wire operation, source, sink or isolated
- Use with conduit or cable installations
- Simple plug-in sensors and replaceable cells
- NEMA 4X IP66 rated for rugged indoor/outdoor use

Cost Effective
- Minimal training required
- One-man operation
- Plug-in sensor replacement
- All necessary accessories included

Applications
- Offshore Oil & Gas production platforms
- Onshore Oil terminals
- Refineries
- Gas Transmission
- Gas Distribution
- LNG terminals
- Gas storage terminals
- Chemical plants
- Petrochemical plants
- Solvent recovery operations

The XNX Universal Transmitter marks a new turn in gas detection from Honeywell Analytics. It supports the widest range of sensors on a common platform and offers a modular choice of inputs and outputs.



Universal Gas Sensing Platform





Bringing together the best solutions in gas detection

Electrochemical
- Proven electrochemical sensing technology
- Surecell™ electrochemical cells are ideal for hot and humid environments
- Long life sensing cells (typical >2 years)
- Patented 'Reflex' sensing element verification diagnostics
- Sensor recognition software auto configures transmitter
- Plug and play factory configured sensors
- Intrinsically safe sensor connection permits hot swap, reducing down time

Catalytic Bead
- Supports Honeywell Analytics 705, 705HT, Sensepoint, Sensepoint HT and MPD sensors
- Fast response to wide range of hydrocarbons and flammables

Infrared (Open Path IR, Point IR, IR Cell)
- Supports Honeywell Analytics Searchline Excel, Searchpoint Optima Plus
- Failsafe operation
- Fast speed of response
- Reduced routine maintenance
- Immune to catalytic poisons
- Long operating life
- Works in inert atmospheres

XNX is designed for flexible integration, simple installation, user friendly operation and straight-forward maintenance. It is ideal for use with a range of gas monitoring controllers or industry standard PLCs. Users are assured of being protected in all conditions with Honeywell Analytics gas monitoring solutions.

XNX's modular design enables Honeywell Analytics to offer appropriate, cost effective solutions to a wide range of gas detection requirements.

The XNX Universal Transmitter is an excellent choice for those who want a total integrated monitoring and safety solution for an industrial plant.

With the XNX, you are freed from the need to add extra controllers, junction boxes, relays, monitors and other equipment accessories.

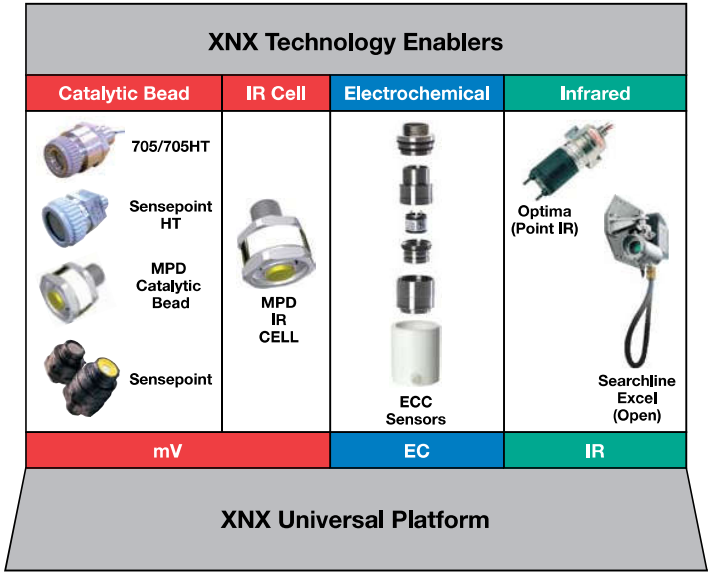

Photos not to scale.

Communications





The XNX's powerful advanced communications module adds increased functionality and flexibility to a gas detection network. Standard HART communications, along with optional Modbus, Foundation Fieldbus (pending) or relays, interface with a PLC and a host of other protocol compatible devices found in industrial applications.

Back-lit, easy-to-read LCD display with icons includes a broad range of language options including English, Spanish, French, Italian, Portuguese, German, Russian and Chinese to meet global requirements.

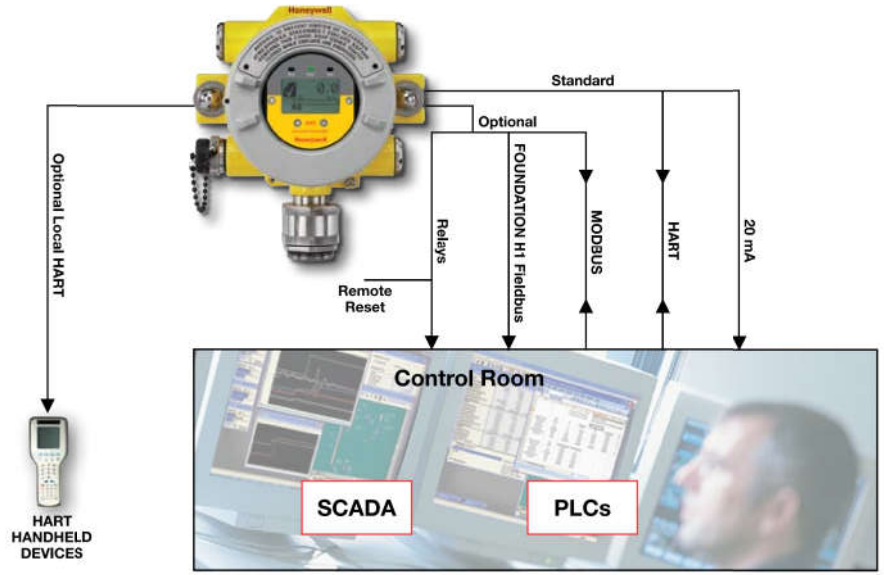

Installation Details







Mechanical

The XNX enclosure is available in a painted stainless steel or aluminum housing with a marine grade coating. Five threaded conduits/cable entries are available in Metric or NPT versions, and ruggedized mounting options provide ultimate installation flexibility. Instrumentation built on various sensing technologies can be attached locally to the transmitter or remotely with the appropriate accessories. Inside, customer and sensor connections to the unit are designed to protect against dangerous electrical misconnections. With pending approvals to UL, CSA and ATEX requirements for Hazardous Locations, and IP66/67 rating to protect against dirt/water ingress, the XNX serves the most demanding industrial environments.

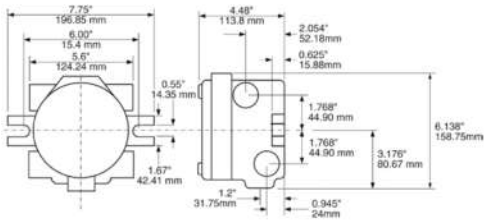

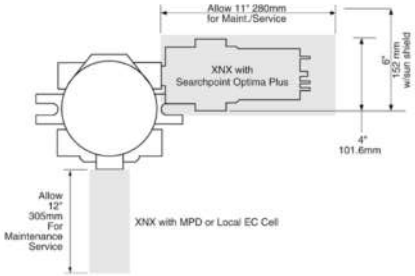

Ordering Information

The XNX part numbering system contains all necessary information to convey the product configuration including options. Agency, Port Thread, Enclosure Material, Sensor Personality define the standard unit. Three option fields are used to define optional Relay or Fieldbus interfaces and factory installed local HART®. To order XNX parts, call 800-538-0363.

Transmitter & Methane Sensor Combo Selection

XNX-AM ☐ ☐ - ☐ ☐ ☐ ☐ ☐

Agency Approval	Port Threads	Enclosure	Sensor	Interface Option	Local HART®	Sensor and Range
ATEX - **A**	M25 - **M**	Stainless - **S**	Electrochem - **E**	None - **N**	None - **N**	None - **NNN**
UL / CSA - **U**	3/4" NPT - **T**	Aluminum - **A**	Infrared - **I**	Relay - **R**	Local HART® - **H**	MPD-AM (Catalytic Bead %LEL) - **CB1**
INMETRO - **B**			milliVolt - **V**	Modbus® - **M**		MPD-AMIF1 (IR %LEL Flam) - **IF1**
				Foundation™ Fieldbus - **F**		MPD-AMIV1 (IR CH4 0-5% Vol) - **IV1**
						MPD-AMIC1 (IR CO 0-2% Vol) - **IC1**

Technical Summary





XNX Transmitter			
Material	LM25 Aluminum, painted (SS316 painted optional)		
Cable Entries	5 conduits/cable entries – (2 right, 2 left, 1 bottom) Available in ¾" NPT, or M25		
Termination	Cage Clamp pluggable Terminal Blocks with retaining screws, 0.5 to 2.5mm (12-28 AWG)		
Mounting	XNX Enclosure Bracket (ears on casting for u-bolt). Integral cast mounting flanges provide secure mounting to surfaces, channels or up to 6" Pipe. Optional Remote sensor (up to 50 ft / 15.2 M) for Cat Bead and Toxic		
User interface	Standard Custom Backlit LCD. 2.5" High Resolution DOT Matrix Display. Discrete Alarm and Status indication. Reliable Non-Intrusive 4 button interface magnetic wand access. Optional HART Handheld with IS Port		
Signal	Standard HART over 3-wire 4-20mA (sink or source). Optional Modbus over RS-485 and Foundation Fieldbus		
Environmental			
Temperature	-40°C to +65°C / -40°F to +149°F (sensor dependent)		
Humidity	20 to 90% RH non-condensing		
IP Rating	NEMA 4X IP65		
Options			
	Form C and SPDT 3 Relays, 240 VAC, 5A (2 Alarm, 1 Fault) (Mutually exclusive with Modbus and Fieldbus Options)		
Power			
	18V to 32V (24V nominal)		
Hazardous Area Approvals (Pending)			
	ATEX: Ex II 2 G D, EEx [ia] IIC T5 (Tamb -40°C to +65°C) UL: Class I, Div 1, Groups B, C, and D / Class 1, Zone 1 AEx d IIC T5 (Tamb -40°C to +65°C) CSA: Class I, Div 1, Groups B, C, and D T5 (Tamb -40°C to +65°C)		
Performance Approvals (Pending)	EU – ATEX, EN45544, EN50104, EN50270, EN50271, EN13980, EN60079, EN60079-18, -1, -7, -29-1, EN45544-1, -2 NA – UL 913, UL 1203, CSA 22.2 No. 152 Other – IEC61508 (SIL Assessment, SIL 2), IECEx OD 005		

Display Module & User Interface (Standard)		
Display Type	Backlit LCD	
Information Displayed	Base Information:	Gas Reading Gas Name and Units of measurement Fault and Alarm Status Large Numeric concentration or LEL display Bar graph showing current reading, set points and full scale.
	Fault/Alarm and Operating Status Indication:	Security settings allow multi level operator access for set-up, configuration and calibration Event history stores Time and Date of all Alarm, Diagnostic, Configuration events
Interface	Magnetic wand with terminal screwdriver (supplied each unit)	

4-20mA & HART (Standard Supply)			
Description	Fully configurable isolated 4-20mA & HART output module providing current sink, current source and isolated modes of operation. (supports HART 6.0 protocol)		
Non-intrusive Interface	Optional local IS port to enable HOT connection of a HART handheld configurator		
Operating Modes	Current sink / Current source / Isolated current sink /Conventional or with HART data		
Output Range	0 to 22mA		
4-20mA Signal Accuracy	+/- 1% FS		
Max loop resistance	600 Ohms at 24Vdc loop supply		
Functions Supported via HART	Gas Reading Gas Name and Units of measurement 4-20mA signal level General/Device Information Installation Configuration Forcing of 4-20mA output	Detailed Sensor Information Including: Optical Signal Level Dynamic Reserve (Excel Only) Raw reading 24V supply voltage Temperature	RTC (Excel Only) Calibration and Configuration status Detailed Fault and Warning Information Fault and Alarm History Zero Calibration

Local IS HART Port (Optional)	
Description	Provides externally accessible IS connections to the XNX transmitter to enable HOT connection of HC275/375 HART or equivalent hand held configurator.
Installation	Fitted to one of the cable entries on the XNX transmitter.
Environmental Protection	Terminals protected by cover to IP 66 when not in use

Technical Summary



Relay Module (Optional)			
Description	Provides three fully user configurable relay outputs that can be switched based on the current gas level and/or status of the transmitter. Provides 2 x SPCO alarm and 1 x SPCO fault relays. Single Pole Double Throw SPDT. Option PCB Factory installed in display module.		
Installation	Fitted into housing base either at the factory or in the field by qualified service engineer.		
Rating	Maximum: 240VAC, 5A (non inductive load)	Minimum: 5V, 10mA (non inductive load)	
Electrical Connections	Fault: Common, Normally Open, Normally Closed Alarm 1: Common, Normally Open, Normally Closed Alarm 2: Common, Normally Open, Normally Closed		
Configuration	**Default**	**Configurable Options**	
	Fault Relay: Normally energized Non latching Signal Inhibit as fault	Fault Relay: Normally energized / normally de-energized None Enable/disable	
	Alarm 1 / 2 Relays: Normally de-energized Non latching Alarm rising on gas reading Alarm level 20% and 40% of scale Hysteresis of 2% of scale	A1 / A2 Relays: Normally energized / de-energized Latching / non latching Alarm on rising / falling Alarm level 10% to 90% of full scale	
Re-setting of Latched Relays	Easily accessible interface on display (if used) or via HART interface (local or remote)		
Note	Use of the Relay Module or 'Other' Communications Module (E.g. Foundation Fieldbus) is mutually exclusive. However, relay function may be used in conjunction with standard communication output i.e. 4-20mA with HART.		
Relay Specific Functions via HART Interface	Relay status information / Reset of latched conditions / Configuration of relays Forcing of relay state Reset through non intrusive User Interface. Remote Switch closure using Remote Reset input Remotely through HART		

Foundation Fieldbus Module (Optional)			
Description	Foundation Fieldbus compliant digital communications interface enables connection of the XNX transmitter to a multi-drop Foundation Fieldbus H1 network.		
Installation	Fitted into housing base either at the factory or in the field by qualified service engineer.		
Connections	Sig+, Sig- and Screen		
Physical Layer	Conforms to IEC 1158-2 and ISA 50.02, 31.25Kbits/s		
Maximum No. of Nodes	32		
Functions Supported	Gas Reading Gas Name and Units of measurement Instrument status (OK, warning, fault, over-range) General/Device Information Remote zero and span calibration (detector dependent)	Detailed Sensor Information Including: Optical Signal Level Dynamic Reserve (Excel Only) Raw reading 24V supply voltage Temperature RTC (Excel Only) Calibration and Configuration status	Detailed Fault and Warning Information: Fault and Alarm History Zero Calibration

Modbus RTU Module (Optional)	
Description	The Modbus output module provides an Isolated RS485 output to enable the connection of the XNX transmitter to a multi-drop Modbus network
Installation	Fitted into housing base either at the factory or in the field by qualified service engineer.
Connections	RS485+, RS485-, Drain
Physical Layer	Isolated RS485, 1200 to 19.2K Baud
Maximum No. of Nodes	254 XNX compatible transmitters only
Protocol	Modbus RTU
Functions Supported	As per Foundation Fieldbus Module (Optional) - see above

Further information is available upon request.

* Foundation Fieldbus not available at time of publication. Please call your Honeywell Analytics sales person.

XNX™ is a registered trademark of Honeywell International.

HART® is a registered trademark of the HART Communication Foundation.

MODBUS® is a registered trademark of Schneider Automation Inc.

Foundation™ is a trademark of Fieldbus Foundation.

Honeywell Analytics Lines of Business







Commercial

Vulcain-brand gas detection from stand-alone units to fully engineered, multi-point systems, all offering cost-effective regulatory compliance

» Applications: parking structures, chillers, mechanical rooms, office towers, commercial buildings, shopping centers, swimming pools, golf courses, schools and universities, laboratories

Industrial

Renowned Sieger and Manning gas detection systems with advanced electrochemical, infrared and open path sensing technologies

» Applications: oil and gas, cold storage, water/wastewater treatment, chemicals, engine rooms, plastics and fibers, agriculture, printing and light industrial



Portables

Single or multi-gas Lumidor and other premium detectors with compact, lightweight designs ranging from simple alarm only units to advanced, fully configurable and serviceable instruments

» Applications: underground utility and electricity ducts, boiler rooms, post-fire sites, sewers, industrial plants, industrial hygiene, first responder teams, remote fleets



High Tech/Government

A complete portfolio of gas and chemical detection instrumentation including infrared spectroscopy (MST) with no cross interference, to Chemcassette paper-based solutions (MDA Scientific) offering detection down to parts per billion

» Applications: semiconductor manufacturing and nanotechnology, aerospace propulsion and safety, specialty chemicals industry, research laboratories, emergency response

Technical Services

24/7 global network includes post-sales service and Systems Integration teams

» Emergency call out, service contracts, on/off-site repair, training and commissioning

» Complete range of spares, consumables and accessories

Please Note:
While every effort has been made to ensure accuracy in this publication, no responsibility can be accepted for errors or omissions. Data may change, as well as legislation, and you are strongly advised to obtain copies of the most recently issued regulations, standards, and guidelines. This publication is not intended to form the basis of a contract.

H_XNX_DS01071_V1 9/08
© 2008 Honeywell Analytics

Honeywell

HWA6181

Communications





The XNX's powerful advanced communications module adds increased functionality and flexibility to a gas detection network. Standard HART communications, along with optional Modbus, Foundation Fieldbus (pending) or relays, interface with a PLC and a host of other protocol compatible devices found in industrial applications.

Back-lit, easy-to-read LCD display with icons includes a broad range of language options including English, Spanish, French, Italian, Portuguese, German, Russian and Chinese to meet global requirements.

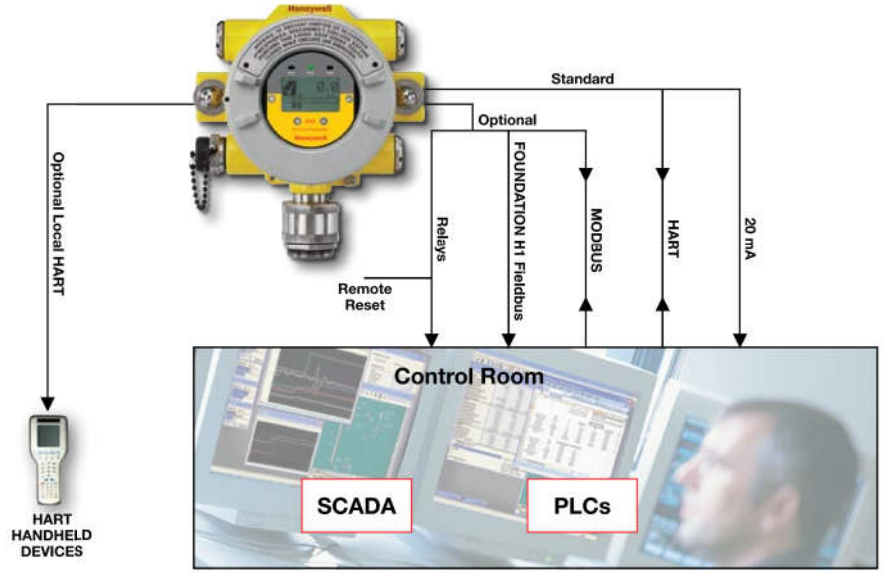

Installation Details







Mechanical

The XNX enclosure is available in a painted stainless steel or aluminum housing with a marine grade coating. Five threaded conduits/cable entries are available in Metric or NPT versions, and ruggedized mounting options provide ultimate installation flexibility. Instrumentation built on various sensing technologies can be attached locally to the transmitter or remotely with the appropriate accessories. Inside, customer and sensor connections to the unit are designed to protect against dangerous electrical misconnections. With pending approvals to UL, CSA and ATEX requirements for Hazardous Locations, and IP66/67 rating to protect against dirt/water ingress, the XNX serves the most demanding industrial environments.

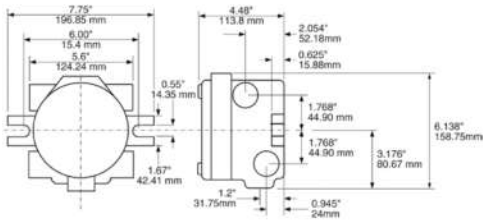

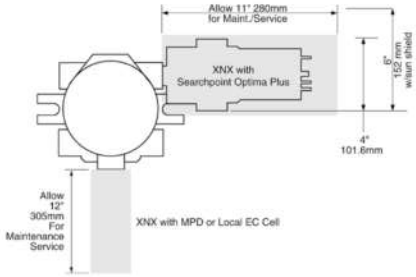

Ordering Information

The XNX part numbering system contains all necessary information to convey the product configuration including options. Agency, Port Thread, Enclosure Material, Sensor Personality define the standard unit. Three option fields are used to define optional Relay or Fieldbus interfaces and factory installed local HART®. To order XNX parts, call 800-538-0363.

Transmitter Selection for H2S Sensor

XNX-AM □ □ - □ □ □ □ □

Agency Approval	Port Threads	Enclosure	Sensor	Interface Option	Local HART®	Sensor and Range
▼	▼	▼	▼	▼	▼	▼ ▼ ▼
ATEX - **A**	M25 - **M**	Stainless - **S**	Electrochem - **E**	None - **N**	None - **N**	None - **NNN**
UL / CSA - **U**	3/4" NPT - **T**	Aluminum - **A**	Infrared - **I**	Relay - **R**	Local HART® - **H**	MPD-AM (Catalytic Bead %LEL) - **CB1**
INMETRO - **B**			milliVolt - **V**	Modbus® - **M**		MPD-AMIF1 (IR %LEL Flam) - **IF1**
				Foundation™ Fieldbus - **F**		MPD-AMIV1 (IR CH4 0-5% Vol) - **IV1**
						MPD-AMIC1 (IR CO 0-2% Vol) - **IC1**

H2S Sensor Cartridge Datasheet



Manufacturer	: Honeywell
Product No.	: XNXXSH1SS
Product type	: Cartridges
Usage	: Analytics XNX Universal Transmitter Fixed Systems Gas Monitors
Type	: Hydrogen sulfide (H2S)
Range / Resolution	: Hydrogen sulfide (H2S) 0-15 ppm (10 to 50 ppm, 1 ppm)
Gas	: H2S | Hydrogen Sulfide
Operating Pressure	: 80 kPa ~ 120 kPa
Operating Air Speed	: 0 ~ 6 m/sec
Warm-up Time (minimum)	: 60 sec.

XNX® Universal Transmitter

Honeywell

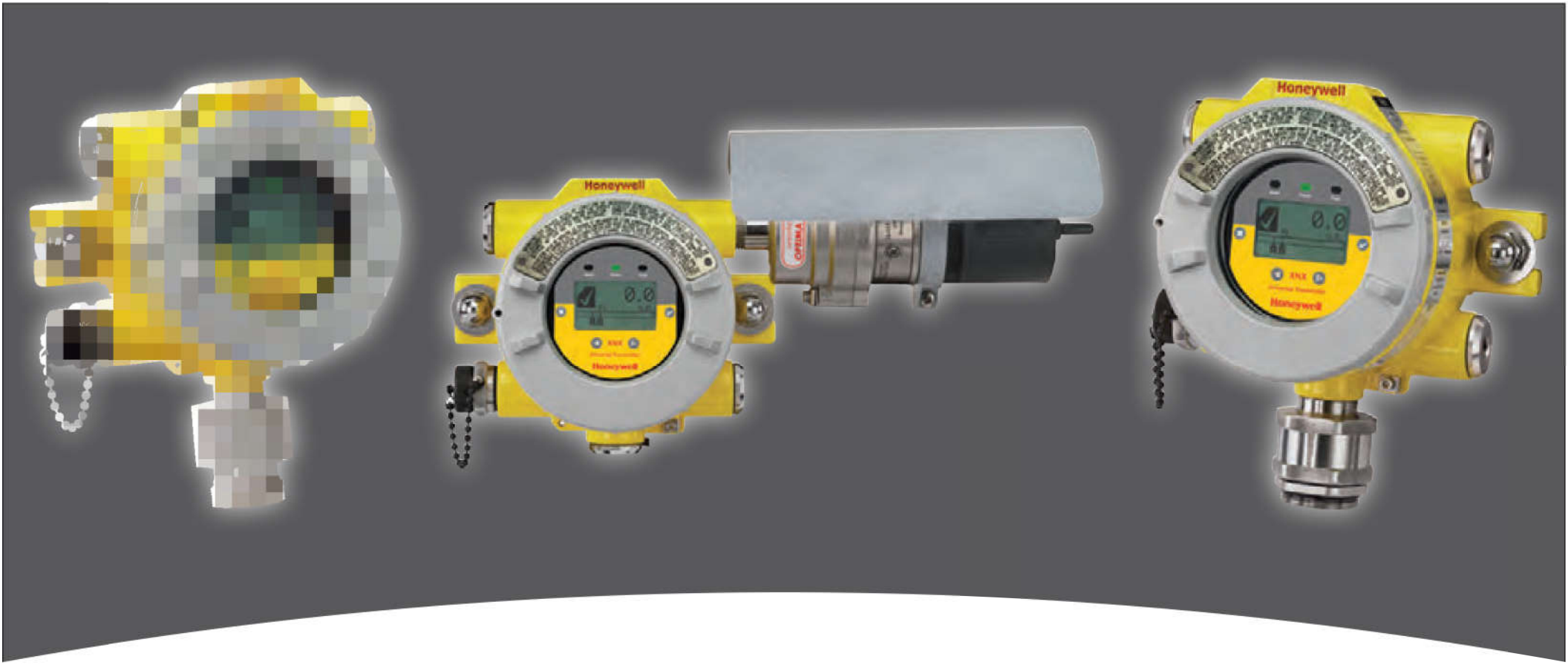

Technical Manual

- Table of Contents
- Safety Information
- Introduction
- Installation and Operation
- Calibration
- Maintenance
- Warnings/Faults
- Specifications
- Control Drawings
- HART® Protocol
- Warranty
- Index

Table of Contents

Safety
Warnings....5
Cautions....7
Notes....7
Information....8
1 Introduction
1.1 Product Description....10
1.1.1 The XNX® Universal Transmitter....10
1.1.2 20 mA/HART® Output....11
1.1.3 Communications....11
1.1.4 Certifications....11
1.1.5 Patents....12
1.2 Product Overview....12
1.2.1 Enclosure....12
1.2.2 Cover....13
1.2.3 POD....14
1.3 Options....14
1.3.1 Local HART....14
1.3.2 Relays....14
1.3.3 Modbus....15
1.3.4 Foundation Fieldbus....15
1.3.5 XNX Accessories....15
1.4 The XNX Front Panel....17
1.4.1 Controls and Navigation....18
1.4.2 The General Status Screen....19
1.5 Main Menu....22
1.5.1 XNX Menu Map....23
2 Installation and Operation
2.1 Mounting and Location of Sensors....28
2.1.1 Mounting the XNX® Universal Transmitter....28
2.2 Wiring the XNX Transmitter....30
2.2.1 General Wiring Considerations....30
2.2.2 Distance Considerations for Installation....31
2.2.3 POD Connections....36
2.2.4 4-20mA Output, Common Connections, and Power Settings....37
2.2.5 Foundation Fieldbus Wiring....38
2.2.6 Terminal Block Connections....38
2.2.7 EC Personality Wiring....39
XNX Electrochemical Sensor Installation....40
XNX EC Sensor Remote Mounting Kit....41
2.2.8 mV Personality Wiring....43
2.2.9 IR Personality Wiring....46
Connecting a Searchpoint Optima Plus or Searchline Excel....46
Connecting Generic mA Devices....47
2.3 Options....51
2.3.1 Local HART Interface....51
2.3.2 Relays....53
2.3.3 Modbus....53
2.3.4 Foundation Fieldbus....54
2.4 Powering the XNX for the First Time....55
2.4.1 XNX Units Configured for EC, mV, and IR (except Searchline Excel)....55
2.4.2 LCD and LED Test....56
2.4.3 XNX IR Units Configured for Searchline Excel....56

Table of Contents

2.5 Configuring the XNX Universal Transmitter 57
Select Language 57
Set Date & Time 58
Set mV Sensor Type 59
Set mA Sensor Type 60
Range & Alarms.....67
Latching / Non-Latching.....69
Set Units 70
mA Levels 70
Calibration Interval.....71
Accept New Sensor Type 72
Beam Block Options 72
Path Length 74
Unit ID 75
Relay Options 76
Fieldbus Options 77
Configure Security.....78
2.6 Verifying the XNX Configuration 79
2.6.1 Test Menu.....79
Inhibit 79
Force mA Output 80
Force Relays 81
Alarm/Fault Simulation 81
2.6.2 Information Menu.....83
Alarm/Fault Status.....83
Date & Time.....83
Transmitter Data.....83
Transmitter Status 84
Sensor Data.....85
Sensor Status 85
Gas Data.....85
Range/Alarm Settings.....85
mA Level Settings.....86
Fieldbus Settings 86
Relay Data.....86
Event History.....87
3 Calibration
3.1 Gas Calibration Menu 90
3.2 Calibration 90
3.2.1 Zero and Span Calibration for XNX EC Sensors, mV Sensors, and Searchpoint Optima.....91
3.2.2 Calibration Procedure 91
3.2.3 Using the Calibration Cup.....93
3.2.4 Zero and Span Calibration of XNX EC Hydrogen Sulfide (H_2S) Sensors.....94
3.2.5 705/705HT Calibrating.....94
3.2.6 Sensepoint/Sensepoint HT Calibrating.....94
3.2.7 Calibrating the Searchpoint Optima Plus.....94
3.2.8 Zero and Span Calibration for MPD Sensors 97
3.2.9 MPD Flammable Sensor Operational Life 98
3.2.10 XNX EC Sensor Operational Life.....98
3.3 Functional Gas Testing (Bump Testing) 99
3.4 Calibrate mA Output 100
3.5 Align Excel (Searchline Excel) 100
3.6 Soft Reset.....101

Table of Contents

4 Maintenance
- 4.1 MPD Sensor Cartridge Replacement 104
- 4.2 XNX® EC Sensor Cartridge Replacement 105
  - 4.2.1 Replacing with the Same Cartridge Type 105
  - 4.2.2 Replacing with a Different Cartridge Type 106

5 Warnings and Faults
- 5.1 Warning Messages 108
- 5.2 Fault Messages 113
- 5.3 Informational Messages 124

6 Specifications
- 6.1 Product Specifications 128
- 6.2 Sensor Data 130
  - 6.2.1 Operating and Storage Conditions for Performance Tested EC Cartridges 130
  - 6.2.2 EC Sensor Performance Data, Factory Mutual Verified (see Section 6.3) 131
  - 6.2.3 EC Sensor Performance Data, DEKRA EXAM verified (see Section 6.3) 132
  - 6.2.4 Other EC Sensors 133
  - 6.2.5 XNX EC Sensor Cross-sensitivity 135
  - 6.2.6 XNX MPD Sensor Performance Data 142
  - 6.2.7 EN60079-29-1 Performance Approved Gases for mV Sensor Types 143
  - 6.2.8 Other Sensor Performance Data 143
- 6.3 XNX Certifications by Part Number Series 144
  - 6.3.1 Certification Labels 148
- 6.4 Product Identification 151
  - 6.4.1 XNX Universal Transmitter 151
  - 6.4.2 XNX EC Replacement Sensors 152
  - 6.4.3 XNX EC Replacement Cells 153
  - 6.4.4 Multi Purpose Detector (MPD) 154
  - 6.4.5 XNX Catalytic Bead and IR Replacement Sensor Cartridges 154
  - 6.4.6 Accessories/Spares 155

7 Control Drawings
- 7.1 XNX UL/INMETRO 159
- 7.2 XNX UL/CSA/FM 162
- 7.3 Remote Sensor Mount 164

Appendix A - HART® Protocol
- A.1 HART® Interface 168
  - ATEX Conditions for Safe Use of Intrinsically Safe HART Handheld Devices 168
  - A.1.1 HART Sink, Source, and Isolated Wiring 169
  - A.1.2 DevComm PC-based HART Interface 172
    - Overview 172
    - Functions 173
  - A.1.3 Handheld Online Menu 176

Appendix B - Modbus® Protocol
- B.1 Modbus and the XNX transmitter 183
- B.2 Modbus Registers 185

Appendix C - Warranty
- Warranty Statement 191

Index 192

Safety

Read and understand this manual before installing, operating, or maintaining the XNX Transmitter. Pay particular attention to the warnings and cautions below. All of the warnings and cautions shown here are repeated in the appropriate sections of the manual.



Warnings: Identify hazardous or unsafe practices which could result in severe injury or death.

Warnings

- Installation must be in accordance with the recognized standards of the appropriate authority in the country concerned.
- Access to the interior of the sensor, when carrying out any work, must only be conducted by trained personnel.
- Before carrying out any work ensure local regulations and site procedures are followed. Appropriate standards must be followed to maintain the overall certification of the sensor.
- To reduce risk of ignition of hazardous atmospheres, conduit runs must have a seal fitting connected within 18 inches (45 cm) of the enclosure.
- To reduce the risk of ignition of hazardous atmosphere, disconnect the equipment from the supply circuit before opening the sensor enclosure. Keep assembly tightly closed during operation.
- Never open the XNX enclosure under power unless the area is known to be non hazardous.
- The sensor must be earthed/grounded for Intrinsic Safety, electrical safety and to limit the effects of radio frequency interference. Earth/ground points are provided inside and outside the unit. EMI note for applications using shielded cable: Cable shield terminations must be made at the cable glands with suitable EMI type glands. Avoid terminating cable shields at the Earth ground lug inside the XNX enclosure. In cases where wiring is in pipe, a shielded cable is not required. The external terminal is only a supplemental bonding connection where local authorities permit or require such a connection.
- Take care when handling EC sensor cells as they may contain corrosive solutions.
- Do not tamper or in any way disassemble the sensor cells.
- Do not expose to temperatures outside the recommended range.
- Do not expose the sensor to organic solvents or flammable liquids.
- At the end of their working lives, sensors must be disposed of in an environmentally safe manner, in accordance with local waste management requirements and environmental legislation. Do NOT incinerate sensors as they may emit toxic fumes.
- High off-scale readings may indicate an explosive concentration of gas.
- Verify all outputs, including display, after installation, after service events, and periodically to ensure the safety and integrity of the system.
- Do not use the XNX Universal Transmitter in oxygen-enriched atmospheres. Concentrations displayed will be adversely affected by oxygen depletion.
- After changing parameters with a handheld device, verify that the parameter settings are correct at the transmitter.
- The factory-set passcodes must be reset to prevent unauthorized access to the transmitter's menus.

- When the transmitter is equipped with the optional Remote Mount Kit, the remote sensor must be securely mounted in a fixed position. The Remote Sensor kit is not intended to be used as a hand-held sensor.
- Enclosures of remotely mounted sensors contain aluminum. Be careful to avoid ignition hazards due to impact or friction when installed in Zone 1 locations.
- Install the junction box according to local codes and manufacturer's requirements.
- The enclosures of remotely mounted 705HT sensors contain aluminum. Be careful to avoid ignition hazards due to impact or friction when installed in Zone 1 locations.
- Power off the transmitter before changing S3 or S4. Both switches must be set in either Source or Sink prior to applying power.
- Minimum and maximum controller alarm levels should not be set at less than 10% or greater than 90% of the full scale range of the sensor. Limits are 60% LEL or 0.6mg/m^3 for agency performance certification.
- When configuring or communicating with the transmitter using the front panel displays, resume monitoring by exiting all menus and returning to the General Status menu manually. No time outs are invoked.
- When selecting a new target gas for units with a Searchpoint Optima Plus, the sensor must be recalibrated.
- XNX Universal Transmitters carrying UL/CSA/FM approvals that are configured for devices measuring %LEL will not allow adjustments to the full scale value. The range is fixed at 100%.
- There is a potential loss of sensitivity during exposure to high concentrations of H2S. Under these conditions, set the control unit to latch at overrange. In standalone configuration, set alarms to latching. When resetting the overrange or alarm, verify correct operation of the transmitter.
- Keep the passwords in a secure area to prevent unauthorized access to the transmitter. If the passwords are lost, resetting the XNX transmitter will require a service technician.
- When the XNX transmitter is placed in Inhibit Mode, alarms are silenced. This will prevent an actual gas event from being reported. Inhibit Mode must be limited to testing and maintenance only. Exit Inhibit Mode after testing or maintenance activities.
- Honeywell recommends periodic bump tests (every 30 days or in accordance with customer site procedures) to the sensor to insure proper operation and compliance with the functional safety rating of the installation.
- As some test gases are hazardous, exhaust the flow housing outlet to a safe area. Do not use the XNX Universal Transmitter in oxygen-enriched atmospheres. (In oxygen-enriched atmospheres, the electrical safety is not given.)
- Exposure to desensitizing or contaminating substances or concentrations causing operation of any alarm may affect sensor sensitivity. Following such events, it is recommended to verify sensor performance by performing a functional gas test (bump test).
- When servicing or replacing sensors, reduce the risk of ignition of hazardous atmosphere by declassifying the area or disconnecting the equipment from the supply circuit before opening the sensor enclosure. Keep the assembly tightly closed during operation.
- Take appropriate precautions when using toxic, flammable, and pressurized cylinders.
- Delays resulting from transmission errors between sensor and transmitter extend response times T90 by more than one-third. The period until fault indication is 10 seconds.
- The HART interface is subject of this EC-type examination certificate only for the purpose of configuration and maintenance.

- The options “Modbus interface” and “Foundation Fieldbus interface” are not subject of this EC-type examination certificate.
- Long-term exposure (> 20 minutes) to concentrations exceeding the fullscale range of the H2S sensor type 2 can cause it to lose sensitivity. The measured value may decrease even though high levels of toxic gas are still present. If such conditions can occur, set the control unit to latch at overrange. In standalone operation, set alarms to latching. When resetting the overrange or alarm, verify correct operation of the transmitter.

Hazardous Location Installation Requirements (UL/CSA)

- To reduce risk of ignition of hazardous atmospheres, conduit runs must have a pour gland installed within 18 inches (457mm) of enclosure.
- All ¾ inch NPT conduit, stopping plugs and adapters must be installed with 5¼ threads (minimum) engaged to maintain Explosion Proof rating.
- Stopping Plugs supplied (Honeywell Part Number 1226-0258) are approved for use ONLY with the XNX Universal Transmitter.
- For units fitted with the Optional Relay Module: Relay Contact Ratings are 250 VAC 5A, 24 VDC 5A Resistive Loads Only.
- Terminal block screws should be tightened to 4.5 lb/in (max).
- Reference XNX Control Drawing 1226E0402 or 1226E0454 for additional information regarding IS function (Local HART and EC Personality).

Hazardous Location Installation Requirements (ATEX)

- Read and understand this manual prior to installation and use.
- Use only certified M25 cable glands for installation.
- Shielded armored cable is required for CE compliance.

- **Special Conditions for Safe Use**
  - The following applies to the HART Barrier intrinsically safe circuits: For installations in which both the Ci and Li of the intrinsically safe apparatus exceeds 1% of the Co and Lo parameters of the associated apparatus (excluding the cable), then 50% of Co and Lo parameters are applicable and shall not be exceeded, i.e. the Ci of the device plus the C of the cable must be less than or equal to 50% of the Co of the associated apparatus, and the Li of the device plus the L of the cable must be less than or equal to 50% of the Lo of the associated apparatus.
  - For circuits connected to the EC barrier in which the capacitance and inductance exceed 1% of the permitted values, then the maximum permitted capacitance is limited to 600nF for group IIC and 1uF for group IIIC.
  - The connection to the HART circuit shall be rated a minimum of IP 6X.

Cautions



Cautions: Identify hazardous or unsafe practices which could result in damage to property or to the product.

Notes

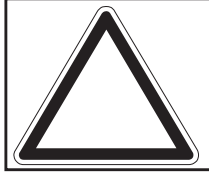

Notes: Additional useful information.

Information

Honeywell Analytics assumes no responsibility for equipment that is not installed and used following the procedures in the Technical Manual.

The reader of this manual should ensure that the appropriate equipment has been installed. If in doubt, contact Honeywell Analytics.

Every effort has been made to ensure the accuracy of our documents, however, Honeywell Analytics can assume no responsibility for any errors or omissions in its documents or their consequences. Honeywell Analytics greatly appreciates being informed of any errors or omissions that may be found in the contents of any of its documents. For information not covered in this document, or if there is a requirement to send comments/corrections about this document, please contact Honeywell Analytics using the contact details given on the back cover of this document.

Honeywell Analytics reserves the right to change or revise the information supplied in this document without notice and without obligation to notify any person or organization of such revision or change. If information is required that does not appear in this document, contact the local distributor/agent or Honeywell Analytics.

XNX® is a registered trademark of Honeywell International.

HART® is a registered trademark of the HART Communication Foundation.

Modbus® is a registered trademark of Schneider Automation Inc.

FOUNDATION™ is a trademark of Fieldbus Foundation.

1 Introduction

1.1 Product Description

1.1.1 The XNX® Universal Transmitter

The XNX Universal Transmitter is a comprehensive gas detection system designed to operate in hazardous locations[1] and utilize multiple sensor technologies, catalytic bead, electrochemical (EC), or infrared (IR) to detect toxic gases, flammable gases, and oxygen depletion gas hazards. Each technology has a dedicated personality board.

Catalytic bead technology is used with the XNX mV personality board. Catalytic bead sensors respond to a wide variety of combustibles so are typically used for flammable gas detection.

Electrochemical technology is used with the XNX electrochemical board. EC sensors measure toxic gases in low concentrations. The XNX EC sensors employ the patented Reflex™ cell fault diagnosis routine. Reflex™ checks for cell presence, cell dry-out, and cell open or short circuit. Reflex™ is automatically initiated by the transmitter at eight-hour intervals. It is also initiated on power up or sensor exchange. In the event of a cell failing this test, a sensor fault code is displayed. Reflex™ diagnostics occur in the first minutes of the power up sequence.

Infrared technology is used with the XNX IR board. IR sensors optically absorb gases that fall into the infrared spectrum.

For additional information about any of the three sensor types, refer to the applicable data sheet for the supported sensor in Figure 1.

The XNX Universal Transmitter also allows for an optional communication board. There are three types of boards: relay, Modbus®, or Foundation™ Fieldbus. See Section 1.1. 2 Communications for additional information.

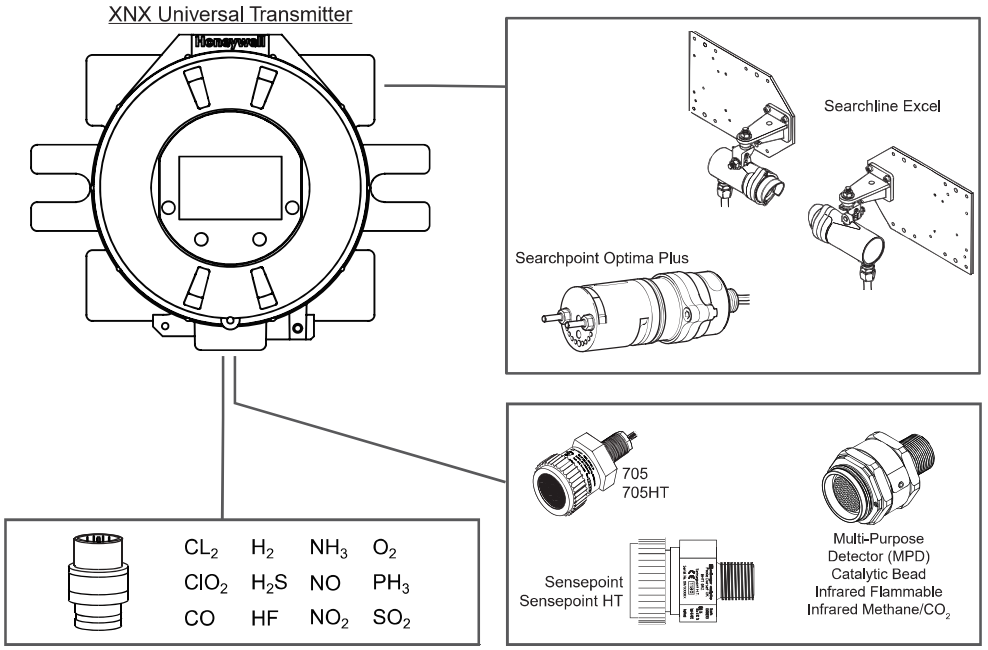

Personality	Sensor Type	Supported Sensors
IR	Point and Open-Path Infrared	Searchpoint Optima Plus, Searchline Excel
mV	Flammable and Toxic	705, 705HT, Sensepoint, Sensepoint HT, MPD (Catalytic Bead Flammable, IR Flammable and IR CO_2)
XNX EC	Toxic and O_2 Sensing	Electrochemical sensors, with Hot Swap, pre-calibrated through Intrinsically Safe (IS) barrier

Figure 1. XNX Universal Transmitter and supported sensing technologies

The XNX Universal Transmitter relies on 4-20mA output, refreshed at least every two seconds (once per second is typical), in which the output is proportional to the gas concentration.

[1]There are three main types of gas hazards: flammable, toxic, and asphyxiant. A flammable gas hazard is one in which there is a risk of fire and/or explosion (e.g., a situation in which a gas such as methane, butane, or propane is present). A toxic gas hazard is one in which there is a risk of poisoning (e.g., a gas such as carbon monoxide, hydrogen sulfide, or chlorine is present). An asphyxiant hazard would include a risk of suffocation through oxygen deficiency. (Oxygen can be consumed or displaced by another gas.)

1.1.2 20 mA/HART® Output

All XNX Transmitters provide a 20mA Current Loop with HART Digital Communication which can be user configured for Sink, Source (3-Wire) or Isolated (4-Wire) electrical interface based on installation requirements.

The 20mA current loop output provides an analog indication of special states, a proportional output to gas concentration and over range indication per the table below. In the event of a simultaneous alarm and fault, an alarm condition will always override a warning state.

Output	Description*	Notes
1.0 mA	Fault	Special State Indication
2.0 mA	Warm-up Inhibit Bump Test Calibration	
3.0 mA	Warning	
4-20 mA	Gas Concentration	
21 mA	Over Range	

*Alarm conditions always take priority over faults and warnings.

HART Protocol provides digital communications with the XNX from a remote control system for Configuration, Status and Diagnostics. (See Appendix A HART Protocol for additional information)

1.1.3 Communications

The XNX Universal Transmitter is registered with the HART Communication Foundation.

The transmitter uses HART over 4-20mA as the standard communications protocol. Additional optional communication interfaces are available: relay communication, Modbus, or Foundation Fieldbus. Each communication option has a dedicated option board. For additional information, refer to Section 1.3 Options.

1.1.4 Certifications

XNX-UT**-****** Versions are UL classified and CSA listed for installation in Class I, Division 1, Groups A, B, C and D Hazardous Locations. FM Approvals evaluation includes Class I, Zone 1, Groups B, C, D, as well as performance tests for specific sensor/transmitter combinations. CSA/FM certification does not cover daisy-chained XNX combustible gas transmitters, the use of HART, Modbus, or Foundation Fieldbus protocols for combustible gas performance. HART, Modbus, or Foundation Fieldbus protocols can be used only for data collection or record keeping with regards to combustible gas. The EC cartridge[2] and EC remote mount kit are UL classified to Canandian and US standards.

XNX-AM **-***** versions are certified to comply with the European Community ATEX Directive and the prescribed protection methods for installation in Potentially Explosive Atmospheres.

XNX-BT**.***** and XNX-UT**.***** versions are UL classified and INMETRO approved (TÜV Rhineland) for compliance with both U.S. and Brazilian standards.

See Section 6.2 for additional information on applicable approvals by part number and Section 6.2.1 for marking.

[2]"Cartridge" and "sensor" are used interchangeably in this document.

1.1.5 Patents

This table shows details about XNX-related patents.

Patents Applicable to the XNX Universal Transmitter		
Patent Number	**Description**	**Application**
6,123,818	Reflex patent	Implemented in XNX
6,251,232	Reflex patent	Implemented in XNX
6,351,982	Flammable sensor housing	XNX accepts this sensor
6,395,230	Pellistor	Sensor used in XNX
7,225,661	Gas calibration adapter	Applicable to XNX
7,716,962	Method of gas calibration	Used to calibrate XNX ECC cartridges

1.2 Product Overview

The XNX transmitter is comprised of the main parts shown below.

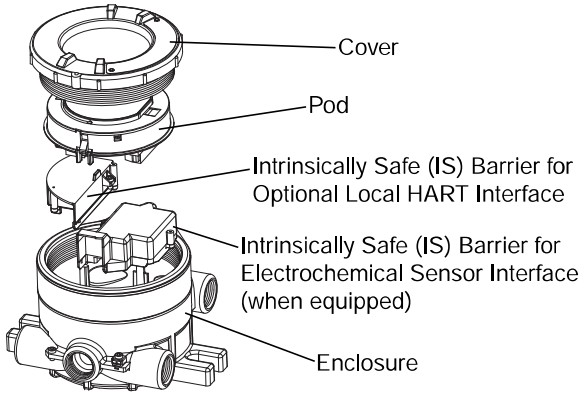

Figure 2. XNX Exploded View

A complete description of XNX accessories can be found in publication 1998-0807 XNX Universal Transmitter Parts List.

1.2.1 Enclosure

Available in either Stainless Steel or Aluminum, with 3/4" NPT (UL/CSA or UL/ INMETRO) or M25 (ATEX/IECEx only) threaded cable/conduit ports, the XNX Universal Transmitter enclosure is explosion-proof and suitable for use in -40°F to +149°F (-40°C to +65°C) operating conditions. A 5-coat marine finishing process provides the highest degree of corrosion protection. For more information on performance specifications, see Section 6 - Specifications.

The XNX enclosure is equipped with five threaded cable/conduit ports providing functional and flexible configurations based on sensor and option choices. See Figure 5 for cable/conduit port assignments and restrictions.

Stopping plugs (HA PN# 1226-0257 or 1226-0258) have been provided to seal unused cable/conduit ports and have been Agency evaluated/approved for use with the XNX enclosure only. The number of stopping plugs varies among available configurations.



Caution: The stopping plugs are for use only with the XNX Transmitter and should not be used with any other device.

Mounting lugs integral to the XNX enclosure allow easy installation on a flat surface or 2"-6" (50-150mm) diameter pipe with the optional Pipe Mount Kit or Ceiling Mount Bracket Kit.

1.2.2 Cover

The transmitter cover is supplied in the identical material specified for the enclosure.

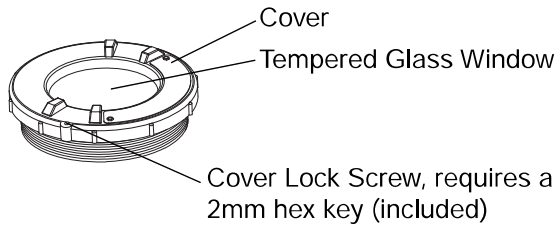

Figure 3. XNX components

A tempered glass window requires the use of the supplied magnetic wand/screwdriver to activate the four user interface switches that are located on the front of the display module. This allows for non-intrusive setup and operation.

A locking screw integrated into the cover provides positive locking that can be removed by using the supplied 2mm hex key[3].

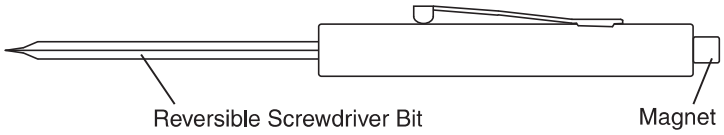

Figure 4. Magnetic Wand/Screwdriver

Note: When attaching the cover or stopping plugs, coat the threads to prevent corrosion.

[3]See the *XNX Universal Transmitter Parts List* (document 1998-0807) for a description of all of the parts that are shipped with the transmitter.

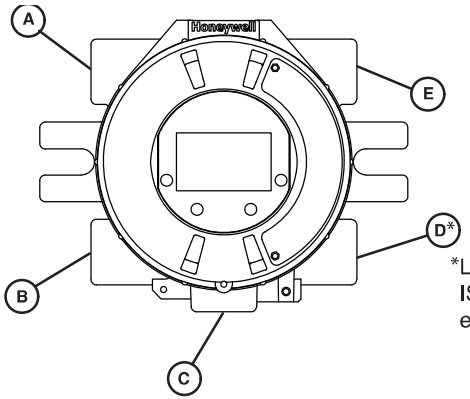

While relay wiring can use any available cable/conduit port in the XNX enclosure, do not use the same cable/conduit port for both relay reset and relay signal lines to avoid electrical noise.

*Limited access due to IS barrier if equipped with electrochemical cell.

Option	Position
Local HART Option	B
XNX Electrochemical Sensor - Local/Remote	C
MPD, 705 Series, Sensepoint Series	C
Searchpoint Optima Plus	A or E
Searchline Excel	Typically C
Remote Sensor Connection (except EC)	Any remaining
Searchpoint Optima Plus - Remote	Any remaining
Modbus	Any remaining
Relays	Any remaining
Power	Any remaining

Figure 5. XNX Universal Transmitter Cable/Conduit Port Assignments

1.2.3 POD

The POD (Personality, Options, and Display) encloses circuit boards for the personality module, optional interfaces, and display.

The personality module, or circuit board, determines the transmitter behavior based on the sensor type attached to the transmitter (electrochemical cell, catalytic bead sensor, or infrared) and provides the necessary interface. Connection to the attached sensor is made through the sensor connector accessed via a slot in the POD housing.

The optional communication boards vary depending on the option selected when ordered. Only one of the three available interface options (relays, Modbus, or Foundation Fieldbus) can be attached to the XNX transmitter.

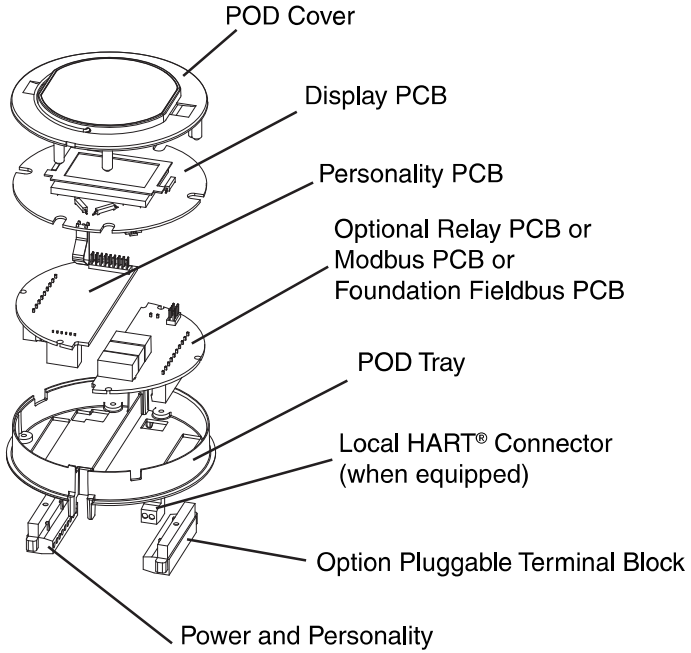

Figure 6. POD, exploded View

1.3 Options

1.3.1 Local HART

Available with any sensor technology or personality, an external access to the HART interface in the XNX transmitter is provided. An intrinsically safe (IS) barrier inside the transmitter gives the user full control using a hand-held interrogator for programming and configuration. The external interface is installed in the lower left cable/conduit port of the transmitter and is intrinsically safe. For more information, see Appendix A - HART Protocol.

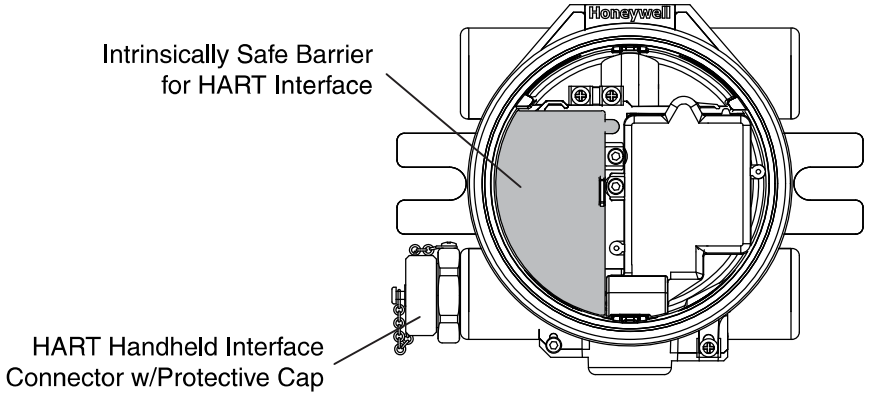

Figure 7. XNX Universal Transmitter with HART Interface IS Barrier

1.3.2 Relays

The relay option (XNX-Relay) provides 3 form “C” (SPDT) normally open/normally closed (NO/NC) contacts for alarm and fault indication. A remote reset input is provided (TB4). Momentarily closing the the circuit between the pins of TB4 performs the same function as the Reset Alarms & Faults command.

The XNX transmitter has three relays: relay 1 is for alarm level 1, relay 2 is for alarm level 2, and relay 3 is for faults and special

states. Two alarm levels can be set, allowing, for example, a level 1 alarm for the immediate area when a certain gas concentration is detected and a plant-wide level 2 alarm when a greater gas concentration is detected.

The maximum refresh rate of the relays is 2 seconds. See Set Alarm Values for more information.

1.3.3 Modbus

The optional Modbus interface allows the XNX to connect to a bus of devices and transmit data to PLCs or controllers. (For more information, see the Modbus Protocol Manual). Connections to the XNX are made through a pluggable terminal block on the Modbus interface circuit board. Modbus RTU protocol uses ASCII/Hex protocols for communication.

Note: POD options are either relay, Modbus, or Foundation Fieldbus.

1.3.4 Foundation Fieldbus

Foundation Fieldbus is a digital communication system which supports several types of messages. Unlike many traditional systems which require a set of wires for each device, multiple Foundation Fieldbus devices can be connected with a single set of wires. Foundation Fieldbus overcomes some of the disadvantages of proprietary networks by providing a standardized network for connecting systems and devices.

1.3.5 XNX Accessories

Pipe Mount Kit

The Pipe Mount kit (1226A0358) allows the XNX to be mounted to pipe from 2”-6” (50-150mm) in diameter. The kit includes the pipe mount bracket, two carriage bolts, nuts, and lock washers.

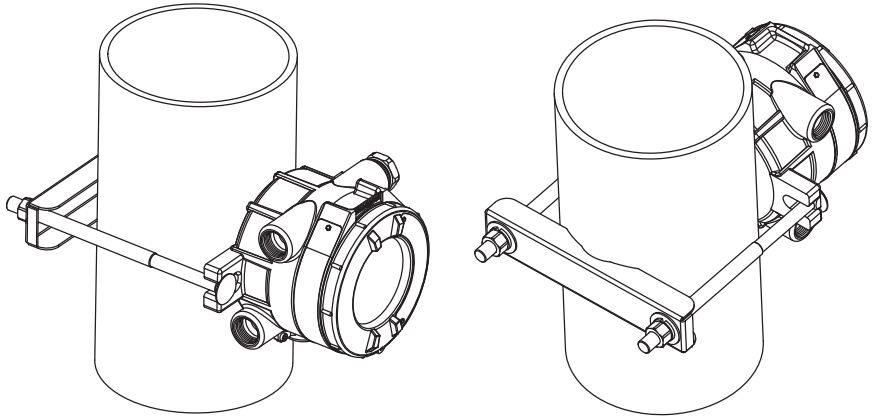

Figure 8. Pipe-mounted XNX Transmitters

Calibration Gas Flow Adapter

The calibration gas flow adapter is used to apply calibration test gas to the sensor. It attaches to the bottom of the sensor and can be fitted without removing the weatherproof cover. See Section 3 - Calibration for further details on gas calibration.

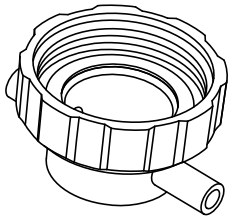

Sensor	Flow Adapter P/N
XNX EC	S3KCAL
MPD	1226A0411
Sensepoint	02000-A-1645
705	00780-A-0035

Weatherproof Cap

The weatherproof cap protects XNX sensors from harsh weather.

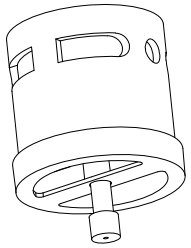

Sensor	Weatherproof Cap P/N
XNX EC	Included
MPD	02000A1640
Sensepoint	02000-A-1640
705	00780-A-2076
MPD-*TCB1	SPXCDWP (included)

Remote Sensor Mounting Kit for XNX EC Sensors

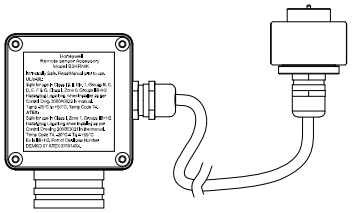

The remote sensor mounting kit (S3KRMK) allows XNX EC sensors to be remotely mounted via an IS cable kit, up to 50 feet (15 meters) from the transmitter. The kit includes 50 feet of shielded cable, cable glands, and remote terminal box. The cable can be cut to the required length then terminated at the remote terminal box.

Collecting Cone

The collecting cone improves detection of lighter-than-air gases such as hydrogen and methane.

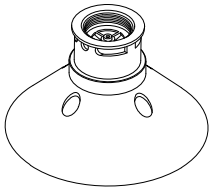

Sensor	Collecting Cone P/N
XNX EC	S3KCC
MPD	02000-A-1642
Sensepoint	02000-A-1642
705	02000-A-1642

Ceiling Mount Bracket Kit

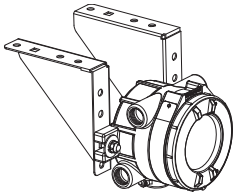

The optional Ceiling Mount Bracket Kit (1226A0355) allows the XNX Transmitter to be mounted to the ceiling. The kit includes two stainless steel ceiling mount brackets, bolts, and nuts.

Remote Gassing Kit

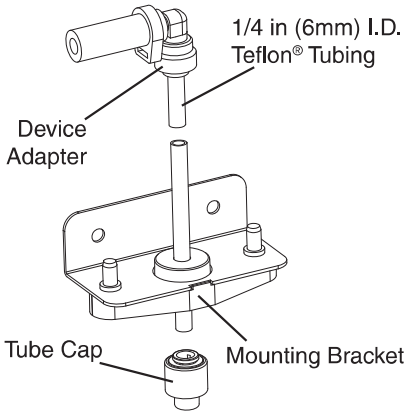

The Remote Gassing Kit (1226A0354) enables gas to be applied remotely for performing functional response checks (bump tests). The kit Includes: 50’ Teflon® tubing, a mounting bracket, a tube cap, and device adapters in 1/4” and 1/8” (6.3 mm and 3.2 mm) ID to attach to bump test ports on the weatherproof cap of the device.

Duct Mount Kit

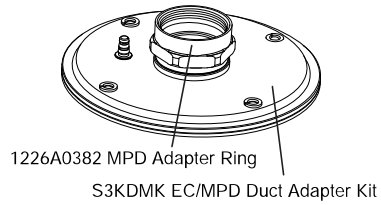

The duct mounting kit (S3KDMK) can be used with the EC sensor to allow detection of O_2, CO, H_2 and H_2S gases in ducts. When combined with the MPD Interface Adapter (1226A0382), the duct mounting kit can accommodate the MPD to detect flammable gases in a duct application. The duct mount kit includes the adapter, gasket and required fasteners. The MPD Interface Adapter includes only the adapter and requires the S3KDMK duct mount kit.

Weather Protector



The Extreme Weather Protector (SPXCDWP) is designed to protect the sensor from environmental conditions in outdoor exposure applications.

1.4 The XNX Front Panel

The XNX Transmitter uses magnetic switches to enable non-intrusive operation. To activate a magnetic switch, hold the magnetic end of the screwdriver up to the glass window and slowly swipe the magnet directly over the shaded area.

For best results, hold the screwdriver as illustrated in Figure 9.

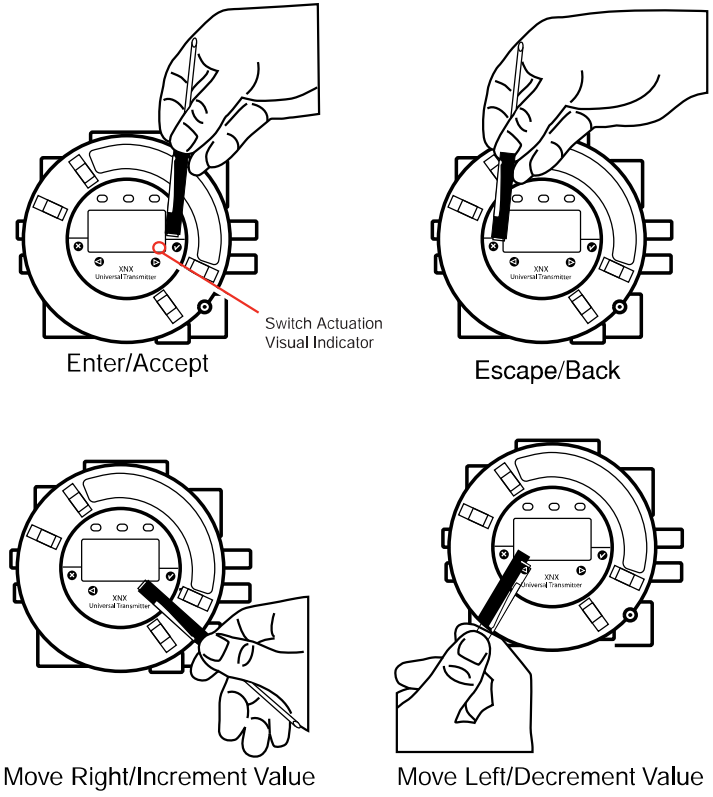

Figure 9. Using the magnetic wand

A decal illustrating the proper method for actuating the magnetic switches is placed on the POD of each transmitter.



Figure 10. Operation decal

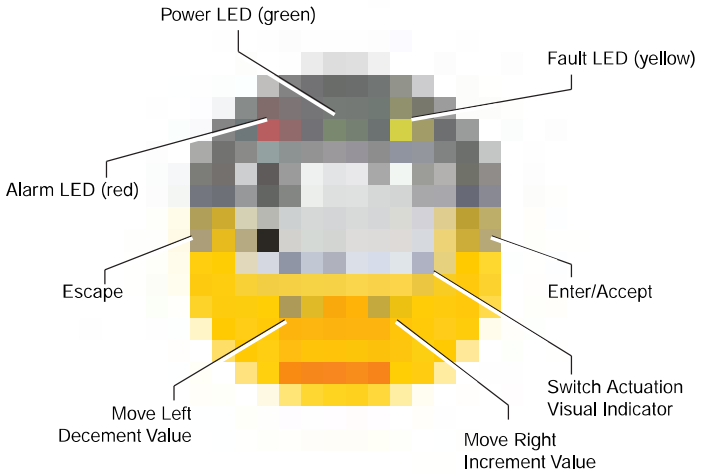

Figure 11. Front panel display of the XNX transmitter

The switch is actuated by the flux lines between the poles of the magnet. This actuation method provides the most consistent response.

A visual indication of the switch actuation will appear in the lower right corner of the XNX display each time the switch is activated.

In some menus where displayed values can be changed, the magnet must be swiped over the switch to cause the numeral on the display to advance through the available values. Use the ⊗ switch to return to a previous menu or field.

For the purposes of this manual, the instruction to use ✓, ⊗, ◀ or ▶, means to activate the relevant magnetic switch as described above.

1.4.1 Controls and Navigation

Command	Description
✓ Enter/Accept	The Enter/Accept switch is used to access menus, accept changes and to answer “yes” to system prompts.
⊗ Escape/Back	The Escape/Back switch is used to return to previous menus or to answer “no” to system prompts.
◀ Move Left/ Decrement Value	The Left/Decrement arrow is used to move through menu options or decrement values when entering text or numbers.
▶ Move Right/ Increment Value	The Right/Increment arrow is used to move through menu options or increment values when entering text or numbers.

1.4.2 The General Status Screen

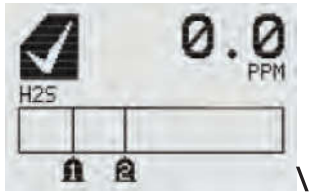

Figure 12. General Status screen[4]

The General Status Screen shows the status of the XNX Transmitter.

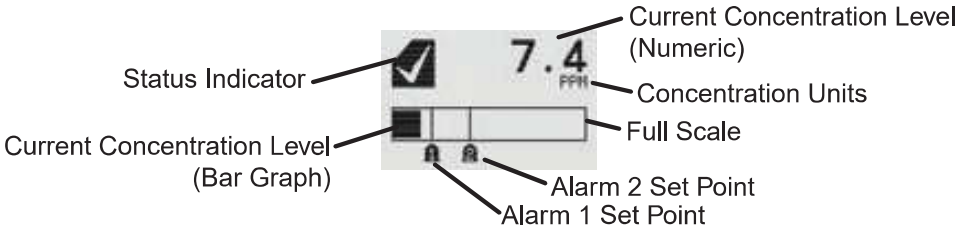

Figure 13. General Status screen, normal operating mode

The Normal Operating Mode icon ☑ indicates proper operation. The XNX display also shows the concentration level of the target gas in two ways. In the first, a numeric value is shown in the upper right corner of the display in the units selected (ppm, %LEL, %VOL). The second concentration display is shown in the form of a bar graph representing the current concentration against full scale and in relation to the defined alarm levels. For more information on setting range and alarm levels, see Section 2.6.2 Range/Alarm Settings. See Section 6.2.2, Section 6.2.3, and Section 6.2.4 for negative drift and zero deviation values.

[4]The LCD screen's refresh rates are 500 milliseconds (when the LCD heater is off) and 1 second (when the heater is on).

When a warning is triggered, the warning icon ⚠ appears and information is displayed on the General Status Screen. The information displayed alternates between screens displaying the gas concentration and the warning code. See Section 5 - Warnings/Faults for more warning code information.

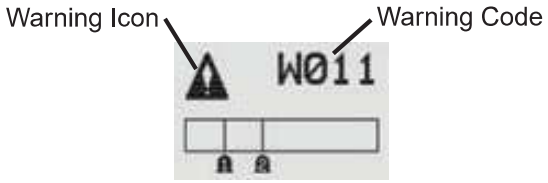

Figure 14. General Status Warning detail

If the Fault icon ⊗ is displayed, a fault condition has been triggered and the display will alternate between the target gas concentration and the fault code. See Section 5 - Warnings/Faults for more fault code information.

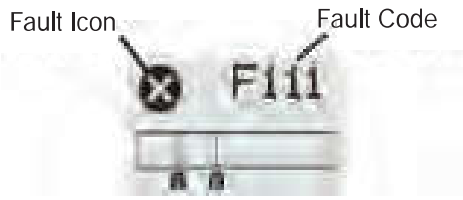

Figure 15. General Status Fault detail

In the event of multiple warnings or faults, the user can view all messages with the transmitter's Event History function.

When an Alarm icon 🔔 is displayed, the target gas concentration exceeds one or both preset alarm levels. The General Status Screen displays the gas concentration and the alarm level exceeded.

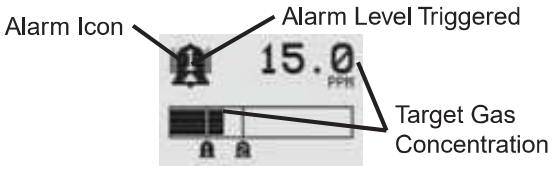

Figure 16. General Status Alarm detail

In an over range condition, the alarm icon will display and the target gas concentration bar graph and alarm setpoints will flash.

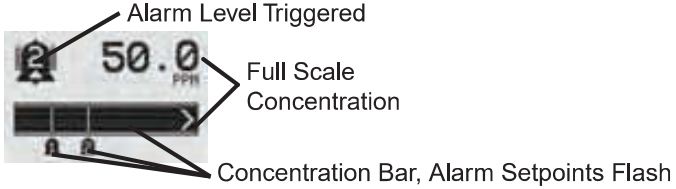

Figure 17. General Status Over Range detail

Negative values are not displayed and do not appear on the 4-20 mA output, but they are indicated by faults or warnings when preset thresholds are exceeded. (See zero deviation in Section 6.1.1)

In addition to the graphic alarm, fault, and warning indicators, the LEDs on the front panel flash in these patterns based on the condition:

Condition	LED[1]		
	Red	Green	Yellow
Alarm 1	Solid		
Alarm 2	Flashing		
Warning			Solid
Fault			Flashing[2]
Health		Flashing	

[1]The refresh rate of the LEDs is 0.5 second.

[2]Special states (Warmup, Inhibit) are not indicated by the Fault LED.

1.4.3 Entering the Menu Structure

Swiping the magnet over the magnetic switch ✓ or ✗ allows the user to reset faults or alarms, display current settings, or make adjustments to the device.

Note: If the Easy Reset option is set to Lock, alarms and faults cannot be reset without logging in or entering a passcode. For more information, see Section 2.5.1 Configure Security.

Swiping the ✗ or "escape" magnetic switch activates the Alarm Re-set screen and allows alarms to be silenced and faults to be reset.

The ✓ switch resets all alarms and faults and returns to the General Status Screen. Use the ✗ switch to return to the General Status Screen without resetting the alarms and faults.



Figure 18. Alarm Reset screen

Two authorization levels control access based upon the security level of the user: Level 1 (routine maintenance) and Level 2 (technician and password administrator). The default passcodes for both levels are "0000" and must be reset after installation to control access (see Section 2.5.1 Configure Security). In general, access to neither security level restricts the user to viewing the transmitter's display. If desired, the Easy Reset from Main Status option allows alarm and fault resets without requiring access to either security level.

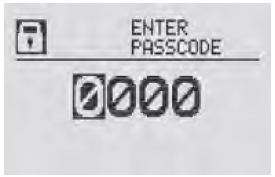

Figure 19. Passcode screen

Warning: The factory-set passcodes must be reset to prevent unauthorized access to the transmitter's menus.

When the Passcode Screen is displayed, the first passcode digit is highlighted. Use the ◀ ▶ switches to increment or decrement through the values. Once the correct value is displayed for the first digit, ✓ accepts the value and moves to the next digit or ✗ moves to the previous digit of the passcode.

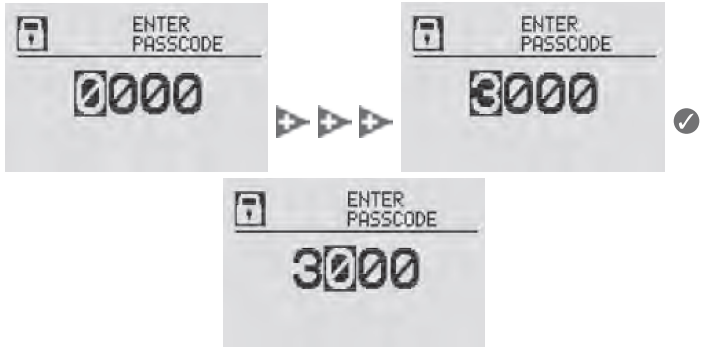

Figure 20. Entering the passcode

Repeat for each of the remaining digits in the passcode. If the passcode is not entered correctly, the Invalid Passcode screen is displayed and the user is returned to the General Status screen.

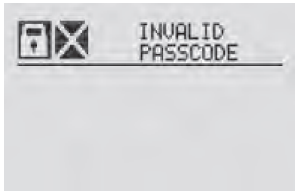

Figure 21. Invalid Passcode screen

1.4.4 Displaying Transmitter Information

While in the General Status display, swipe the magnet over the magnetic switch ▶ to display information about the transmitter. The General Status display will replace the bar graph in the lower portion of the screen with the unit's serial number, the date and time, and the unit's part number.



Figure 22. General Status Screen with Unit Information

1.5 Main Menu

Once the proper passcode has been entered, the transmitter displays the Main Menu.

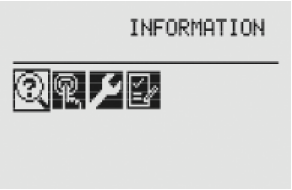

Figure 23. The Main Menu

From the Main Menu, a Level 1 user can:

- display the current settings/configuration
- test the transmitter
- calibrate and bump test the transmitter
- configure the unit for language, date and time

The Main Menu consists of these options:

Menu		Description	See Section...
	Configure	Provides access to settings to configure the transmitter and connected devices	2.5.1
	Test	Provides access to tools and settings to allow simulation of gas events to test the system	2.6.1
	Information	Displays current settings for the XNX transmitter including optional relays and Modbus	2.6.2
	Gas Calibration	Displays the XNX interface to calibrate sensors attached directly to the transmitter	3.1

1.5.1 XNX Menu Map

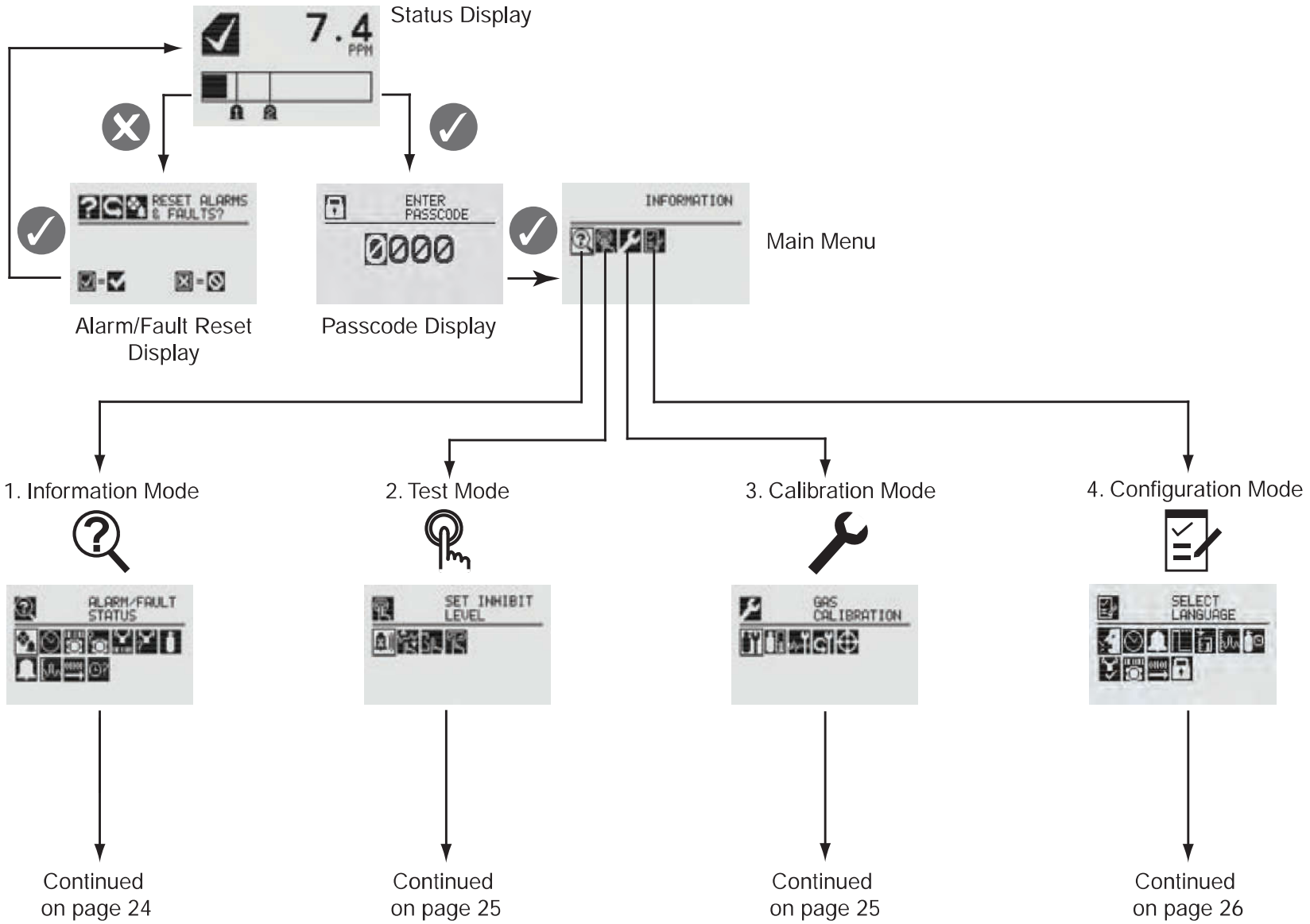

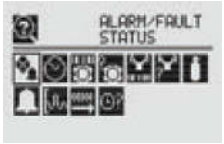

- Information Mode
  - Alarm/Fault Status
    - Alarm/Fault
      - Confirm Alarm/Fault Reset
      - Reset Alarm/Fault
  - Date & Time
  - Transmitter ID, Serial #, Revision
    - Transmitter Data
  - Transmitter Status
    - Transmitter Status
  - Sensor Type, Serial #, Revision
    - Sensor Data
  - Sensor Status
    - Sensor Status
  - Gas Name, ID, Range
    - Gas Data
  - Range Settings, Alarm Settings
    - Range/Alarm Settings
  - mA Level Settings
    - mA Level Settings
  - Relay Settings[5]
    - Relay Settings
  - Fieldbus Settings[6]
    - Fieldbus Settings
  - Event History
    - Increment Next/Previous Event
    - Increment Next/Previous Hour
    - Increment Next/Previous Day
    - Increment Next/Previous Alarm
    - Increment Next Previous Fault

5 Optional relay only

6 Optional Foundation Fieldbus and Modbus only

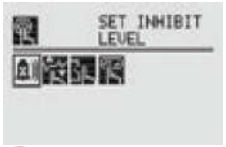

- Test Mode
  - Inhibit
    - Enable/Disable Inhibit
  - Force mA Output
    - Select Current: 0 to 22 mA
    - Accept
  - Force Relay[7]
    - Select Relay 1
    - Select Relay 2
    - Select Relay 3
    - Accept
  - Alarm/Fault Simulation
    - Alarm 1 Simulation
    - Alarm 2 Simulation
    - Warning Simulation
    - Fault Simulation

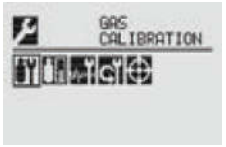

- Calibration Mode
  - Gas Calibration
    - Enter Span Gas Concentration (Oxygen)
    - Enter Span Gas Concentration (Not Oxygen)
  - Bump Test
  - mA Output Calibration
    - Adjust 4 mA Output
    - Adjust 20 mA Output
  - Soft Reset[8]
  - Align Excel[9]

7 Optional relay only

8 Searchpoint Optima and Searchline Excel only

9 Searchline Excel only



- Configuration Mode
  - Select Language
  - Set Date & Time
    - Set Date Format
    - Set Year, Month, Day
    - Set Hours, Minutes, Seconds
  - Sensor Type Selection
    - Set mV Sensor Type[10]
    - Set mA Sensor Type[11]
  - Gas Selection
    - Changing the Gas or Units Name
    - Gas Selections and Alarm Limits Based on mV Sensor Type
  - Range & Alarms
    - Set Range
    - Alarm 1 Type
    - Alarm 1 Setpoint
    - Alarm 1 Latching or Non-latching
    - Alarm 2 Type
    - Alarm 2 Setpoint
    - Alarm 2 Latching or Non-latching
    - Selecting the Numeric Format
  - Latching/Non-latching
  - Change Meas. Units[12]
  - mA Output Levels
    - Change mA for Inhibit
    - Change mA for Warning
    - Change mA for Overrange
    - Change mA for Low Signal
    - Change mA for Blocked Beam
  - Set Calibration Interval
  - Accept New Sensor Type[13]
    - Information screen identifying previous sensor and new sensor
    - Screen displays new type and old type
  - Set Beam Block[14]
    - Select Beam Block Threshold
    - Select Time to Beam Block
    - Select Time to Fault
  - Set Path Length[15]
    - Set New Path Length
  - Configure Unit ID
    - Edit ID
    - Clear ID
    - Default ID
  - Relay Options[16]
    - Select A1
    - Select A2
  - Fieldbus Options[17]
    - Change Fieldbus Address
    - Change Fieldbus Speed
  - Security
    - Reset and LVL1
    - LVL1 Code
    - LVL2 Code

10 Catalytic bead sensor only
11 Searchpoint Optima and Searchline Excel only
12 ECC and mV only
13 Electrochemical and catalytic bead sensors only
14 Searchline Excel only
15 Searchline Excel only
16 Optional relay only
17 Optional Foundation Fieldbus and Modbus only

Honeywell

2 Installation and Operation

2.1 Mounting and Location of Sensors

Caution: Locate transmitters and sensors in accordance with relevant local and national legiislation, standards, and codes of practice.

The placement of sensors should be determined following the advice of experts having specialist knowledge of gas dispersion, experts having knowledge of the process plant system and equipment involved, and safety and engineering personnel. The agreement reached on the location of sensors should be recorded. Consider these factors when locating gas sensors:

- possible damage caused by natural events such as rain or flooding
- ease of access for functional testing and servicing
- how escaping gas may behave due to natural or forced air currents.

2.1.1 Mounting the XNX® Universal Transmitter

The transmitter can be mounted in a number of ways using the integral mounting tabs. The transmitter can be attached to flat wall surfaces or to Unistrut®. With the optional Pipe Mount kit, the unit can be mounted to pipe of diameter 2” to 6” (50 to 150mm). A ceiling mount bracket kit (1226A0358) is also available.

Note: Agency certifications require that EC and mV sensors face down. Optima sensors must be mounted horizontally.

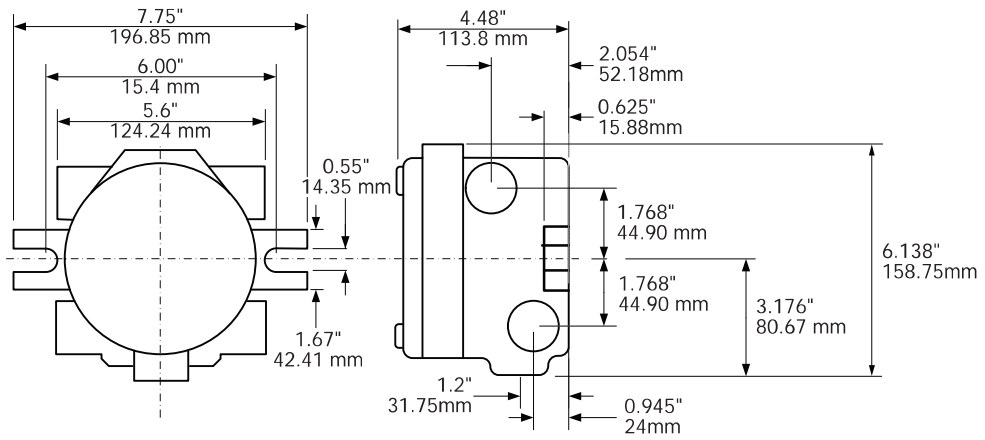

Figure 24. XNX Universal Transmitter mounting dimensions and clearances

Warning: When the transmitter is equipped with the optional Remote Mount Kit, the remote sensor **must** be securely mounted in a fixed position. The Remote Sensor kit is not intended to be used as a hand-held sensor.

The transmitter is configured with five cable/conduit ports built into the housing for wiring and mounting sensors. Figure 25 provides the guidelines to proper installation of the XNX.

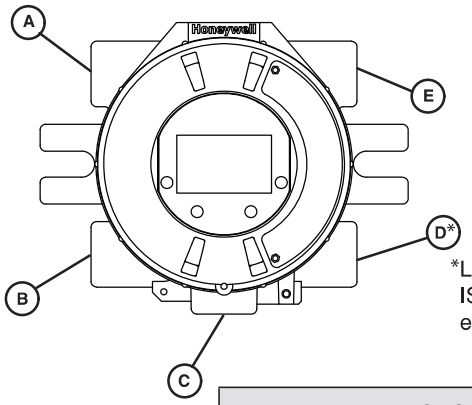

While relay wiring can use any available cable/conduit port in the XNX enclosure, do not use the same cable/conduit port for both relay reset and relay signal lines to avoid electrical noise.

*Limited access due to IS barrier if equipped with electrochemical cell.

Option	Position
Local HART® Option	B
XNX Electrochemical Sensor - Local/Remote	C
MPD, 705 Series, Sensepoint Series	C
Searchpoint Optima Plus	A or E
Searchline Excel	Typically C
Remote Sensor Connection (except EC)	Any remaining
Searchpoint Optima Plus - Remote	Any remaining
Modbus	Any remaining
Relays	Any remaining
Power	Any remaining

Figure 25. XNX Universal Transmitter cable/conduit port assignments

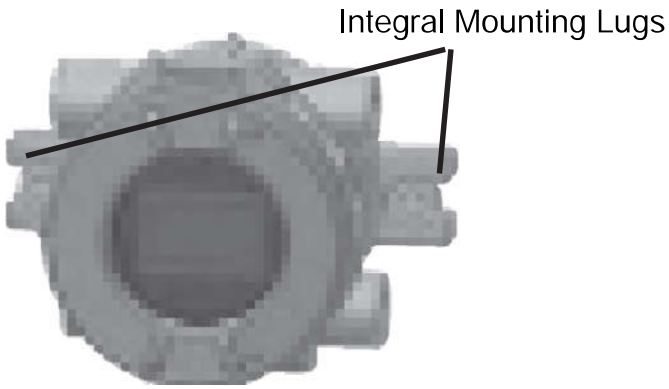

Figure 26. XNX Universal Transmitter mounting lugs

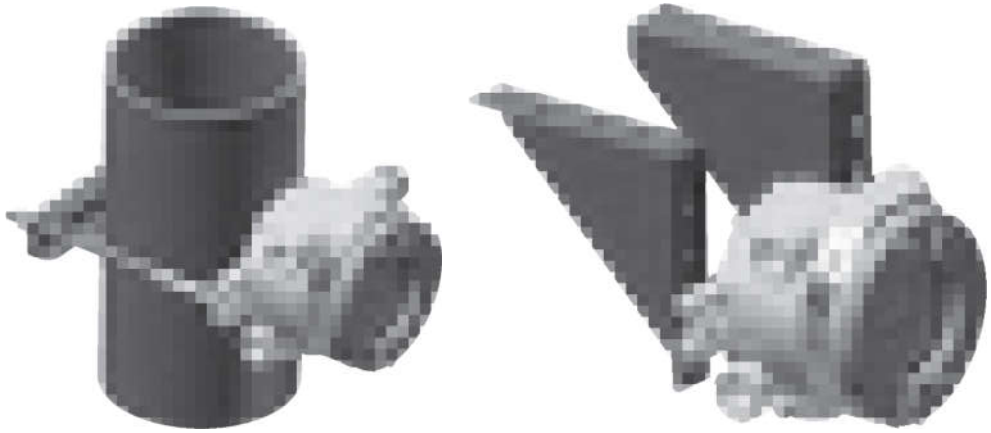

Figure 27. Optional pipe and ceiling mounts

2.2 Wiring the XNX Transmitter

The XNX transmitter is available in sensor technologies, or personality options, which support a variety of sensors and applications. Each of the personalities use dedicated interface boards. Pluggable terminal blocks are used for easy connection and service. The personality boards and optional communication interfaces are enclosed in plastic housings comprising the electronics POD (**P**ersonality, **O**ptions, and **D**isplay). The Personality circuit board determines the XNX behavior based on the sensor type attached to the XNX interface (Figure 35). See Specifications for drift and zero deviation values.

This table illustrates the three XNX transmitter configurations and the sensors each support.

XNX IR Personality		XNX EC Personality
		
Searchline Excel	Searchpoint Optima Plus Local/ Remote	XNX EC Sensor
Generic mA Sensors		XNX EC Sensor Remote Mount Kit

XNX mV Personality		
		
705 Local / Remote	MPD Local (cat bead and IR)	Sensepoint Local / Remote
705HT Local / Remote	MPD Remote	Sensepoint PPM Local/Remote
		Sensepoint HT Remote

Figure 28. XNX Transmitter personalities



Caution: Before wiring the transmitter, confirm that the correct personality and communication boards are installed.

2.2.1 General Wiring Considerations

For proper operation of the XNX Universal Transmitter and sensor technologies, consideration of wiring-induced voltage drops, transient electrical noise, and dissimilar earth ground potentials is imperative in the design and installation of the system.

EMI note for applications using shielded cable: Cable shield must provide 90% coverage of the wiring. Cable shield terminations must be made at the cable glands with suitable EMI-type glands. Avoid terminating cable shields at the earth ground lug inside the XNX enclosure.

Loading

When wiring for DC power, 4-20mA signal, remote wiring to sensors must be sized sufficiently to provide adequate voltages for the line length and the loads that will be used.

Isolation

Isolating power and signal carrying conductors is recommended.

Circuit Protection

Supply circuits must provide over current protection. Class 2 power supplies are required for 24 volt DC supply. Consider inrush current in specifying any DC supply. Power supply range

is 16 to 32 VDC for EC and mV versions, 18 to 32 VDC for Searchpoint Optima Plus and Searchline Excel, and 16 to 32 VDC depending on the limitations of the device for the generic 4-20mA input.

Loads

The use of high inrush or inductive loads may affect the performance of the transmitter. For best reliability use resistive loads only.

2.2.2 Distance Considerations for Installation

Providing power to the transmitter is the factor that will determine the maximum distance of the installation. The 4-20 mA output signal will easily handle the distance back to the control equipment.

The primary factors determining distance are the minimum operating voltage of the transmitter and/or sensor; the maximum current draw of the transmitter/sensor, the resistance of the wire used, the power supply voltage, and the current capacity of power supply.

An additional consideration is the type of installation; specifically, how many transmitters/sensors are drawing power from the same power supply and whether these transmitters are using the same pair of wires (“daisy-chain”) or have their own connections.

Types of Installations

There are three basic types of installation: a single transmitter; multiple transmitters connected to a single power source; and multiple transmitters connected in a “daisy-chain” configuration.

Single Transmitter

This is the simplest type of installation. It consists of a single XNX transmitter installation per power source.

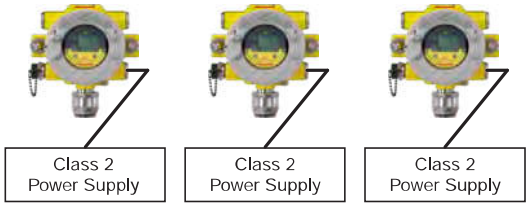

Figure 29. Single Transmitter Installation

Advantages:

- Maximum distance between power source and transmitter
- Smaller power source
- If a power source fails, only one monitoring point fails.

Disadvantage:

- Multiple transmitters require multiple power sources.

Multiple Transmitters Connected to a Single Power Source

This is two or more transmitters sharing a single power source with each transmitter having its own dedicated wiring to the power source.

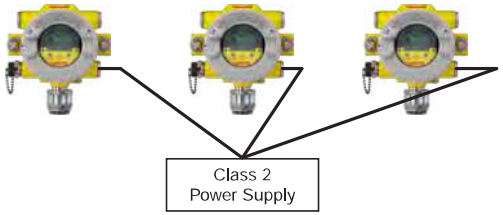

Figure 30. Multiple Transmitters Powered by a Single Power Supply

Advantages:

- Maximum distance between power source and transmitters

- Fewer power sources.

Disadvantages:

- Larger power source will be needed
- If a power source fails, several monitoring points fail.

Multiple Transmitters Connected in a "Daisy-Chain" Configuration

This configuration consists of two or more transmitters installed in a line. The power connections are installed as an extension of the previous transmitter, with the first transmitter being the only one actually wired to the power source.

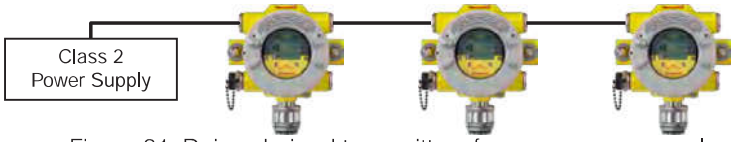

Figure 31. Daisy-chained transmitters from one power supply

Advantages:

- Less wire needed for installation
- Fewer power sources.

Disadvantages:

- Requires a larger power source
- Shorter distance between power source and transmitters.
- If a power source fails, several monitoring points fail.

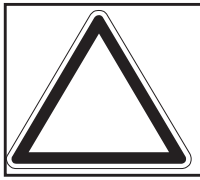

Note: CSA/FM certification does not cover daisy-chained XNX combustible gas transmitters.

Power Source Selection

For each type of installation, selection of power supply is important. Power supplies are rated by voltage and power. The nominal voltage for all XNX transmitters is 24V with the power required depending on the number of points using the same power supply.

XNX Universal Transmitter Maximum Power Consumption				
Configuration	-40°C to +65°C		-10°C to +65°C	
	HART over 4-20mA (watts)	HART over 4-20mA with Relay, Modbus®, or Foundation™ Fieldbus (watts)	HART over 4-20mA (watts)	HART over 4-20mA with Relay, Modbus, or Foundation Fieldbus (watts)
XNX with toxic sensors	5.1	6.2	3.4	4.5
XNX with catalytic sensors	5.4	6.5	3.7	4.8
XNX with infrared cartridge	5.4	6.5	3.7	4.8
XNX with Searchpoint Optima Plus	8.6	9.7	6.9	8.0
XNX with Searchline Excel	12.1	13.2	10.4	11.5

As a general guideline, the power supply should be capable of providing more power than is required by the installation. A 10 watt power supply is fine for a single XNX mV with catalytic sensor (6.5 watts required, see the following table) but is inadequate for a single XNX IR with Searchpoint Optima Plus (10 watts required).

To determine the wattage required, add the maximum power requirements of all the points that will share the power supply. For example, consider a system with two XNX mV transmitters with catalytic sensors (6.5 watts each) and one XNX IR with

Searchpoint Optima Plus (10 watts). A 25 watt power supply would probably handle this installation, but a 30 watt power supply would be a better choice.

Wire Selection

The type of wire used for connections has an effect on the distance of the installation. This is because some of the voltage is lost in the wire on the way to the transmitter.

Thinner wire (i.e., 18 AWG) will lose more voltage than thicker wire (i.e., 12 AWG). The amount of voltage lost depends on how much power is being drawn through the wire; more power means more loss. If too much voltage is lost in the wiring, there may not be enough at the distant point to allow the transmitter to operate.

Distance Chart for Single Transmitter Distances

For installations that have dedicated wiring between the transmitter and the power supply, use the following chart. These distances assume stranded wire is used. If multiple transmitters are using the same power supply, make sure the power supply wattage rating is high enough to power all transmitters simultaneously.

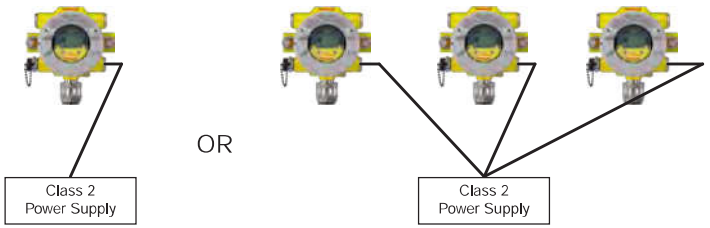

Figure 32. Single transmitter distances

Single Transmitter Distances				
Configuration	**18 AWG [1.0 mm2]**	**16 AWG [1.5 mm2]**	**14 AWG [2.0 mm2]**	**12 AWG [3.5 mm2]**
XNX mV or EC With Sensor	1140 feet [347 meters]	1810 feet [551 meters]	2890 feet [880 meters]	4620 feet [1408 meters]
XNX IR with Searchpoint Optima Plus	660 feet [201 meters]	1060 feet [323 meters]	1690 feet [515 meters]	2690 feet [820 meters]
XNX IR with Searchline Excel	550 feet [168 meters]	890 feet [270 meters]	1410 feet [430 meters]	2260 feet [690 meters]

Daisy-Chained Transmitter Distances

It is difficult to calculate distances for this configuration. There are many factors to be considered: distance from control room to first transmitter, distance between transmitters, sensor types, etc. A few scenarios are presented here to provide a base to work from.

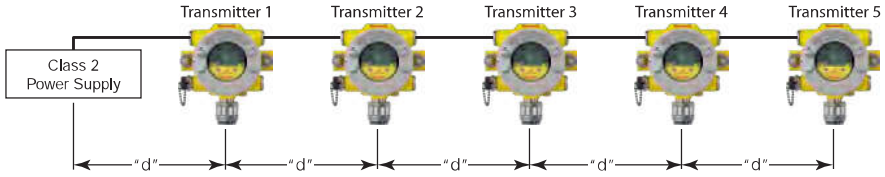

Figure 33. Daisy-chained transmitter distances

1. Several transmitters equally spaced from themselves and the power source.

2 Transmitters - Distance "d"				
Configuration	**18 AWG [1.0 mm2]**	**16 AWG [1.5 mm2]**	**14 AWG [2.0 mm2]**	**12 AWG [3.5 mm2]**
XNX mV or EC With Sensor	380 feet [115 meters]	600 feet [183 meters]	960 feet [292 meters]	1540 feet [469 meters]
XNX IR with Searchpoint Optima Plus	220 feet [67 meters]	350 feet [106 meters]	560 feet [170 meters]	900 feet [274 meters]
XNX IR with Searchline Excel	185 feet [56 meters]	295 feet [90 meters]	470 feet [143 meters]	750 feet [229 meters]

3 Transmitters - Distance "d"				
Configuration	**18 AWG [1.0 mm2]**	**16 AWG [1.5 mm2]**	**14 AWG [2.0 mm2]**	**12 AWG [3.5 mm2]**
XNX mV or EC With Sensor	190 feet [58 meters]	300 feet [91 meters]	480 feet [146 meters]	770 feet [234 meters]
XNX IR with Searchpoint Optima Plus	110 feet [33 meters]	175 feet [53 meters]	280 feet [85 meters]	450 feet [137 meters]
XNX IR with Searchline Excel	90 feet [27 meters]	145 feet [44 meters]	235 feet [71 meters]	375 feet [114 meters]

4 Transmitters - Distance "d"				
Configuration	**18 AWG [1.0 mm2]**	**16 AWG [1.5 mm2]**	**14 AWG [2.0 mm2]**	**12 AWG [3.5 mm2]**
XNX mV or EC With Sensor	110 feet [33 meters]	180 feet [55 meters]	290 feet [88 meters]	460 feet [140 meters]
XNX IR with Searchpoint Optima Plus	65 feet [20 meters]	105 feet [32 meters]	165 feet [50 meters]	270 feet [82 meters]
XNX IR with Searchline Excel	55 feet [17 meters]	85 feet [26 meters]	140 feet [43 meters]	225 feet [68 meters]

5 Transmitters - Distance "d"				
Configuration	**18 AWG [1.0 mm2]**	**16 AWG [1.5 mm2]**	**14 AWG [2.0 mm2]**	**12 AWG [3.5 mm2]**
XNX mV or EC With Sensor	75 feet [23 meters]	120 feet [36 meters]	190 feet [58 meters]	300 feet [91 meters]
XNX IR with Searchpoint Optima Plus	45 feet [13 meters]	70 feet [21 meters]	110 feet [33 meters]	180 feet [55 meters]
XNX IR with Searchline Excel	35 feet [11 meters]	55 feet [17 meters]	90 feet [27 meters]	150 feet [46 meters]

2. Several transmitters installed in pairs with each pair equally spaced from the next pair and the power source. These distances assume the paired transmitters are installed within 10 feet [3 meters] of each other.

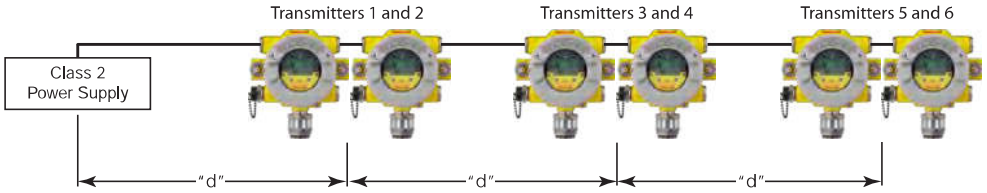

Figure 34. Transmitters in pairs

2 Transmitters - Distance "d"				
Configuration	**18 AWG [1.0 mm2]**	**16 AWG [1.5 mm2]**	**14 AWG [2.0 mm2]**	**12 AWG [3.5 mm2]**
XNX mV or EC With Sensor	485 feet [147 meters]	775 feet [235 meters]	1230 feet [292 meters]	1970 feet [600 meters]
XNX IR with Searchpoint Optima Plus	380 feet [115 meters]	600 feet [180 meters]	960 feet [290 meters]	1540 feet [470 meters]
XNX IR with Searchline Excel	280 feet [85 meters]	440 feet [134 meters]	700 feet [213 meters]	1130 feet [344 meters]

4 Transmitters - Distance "d"				
Configuration	**18 AWG [1.0 mm2]**	**16 AWG [1.5 mm2]**	**14 AWG [2.0 mm2]**	**12 AWG [3.5 mm2]**
XNX mV or EC With Sensor	190 feet [58 meters]	300 feet [91 meters]	480 feet [146 meters]	770 feet [234 meters]
XNX IR with Searchpoint Optima Plus	110 feet [33 meters]	175 feet [53 meters]	280 feet [85 meters]	450 feet [137 meters]
XNX IR with Searchline Excel	90 feet [27 meters]	145 feet [44 meters]	235 feet [71 meters]	375 feet [114 meters]

6 Transmitters - Distance "d"				
Configuration	**18 AWG [1.0 mm2]**	**16 AWG [1.5 mm2]**	**14 AWG [2.0 mm2]**	**12 AWG [3.5 mm2]**
XNX mV or EC With Sensor	95 feet [33 meters]	150 feet [45 meters]	240 feet [73 meters]	385 feet [117 meters]
XNX IR with Searchpoint Optima Plus	55 feet [17 meters]	85 feet [26 meters]	140 feet [42 meters]	225 feet [68 meters]
XNX IR with Searchline Excel	45 feet [14 meters]	70 feet [21 meters]	115 feet [35 meters]	185 feet [56 meters]

Ensure that wiring is adequately protected from mechanical failure in installation. Specific shorted or open circuit conditions of wiring to the MPD **I sensors may result in full scale concentration readings prior to, or preventing the internal diagnostic routines from identifying the external installation fault.**

2.2.3 POD Connections

This illustration shows the connections available on each of the terminal blocks for each type of personality board.

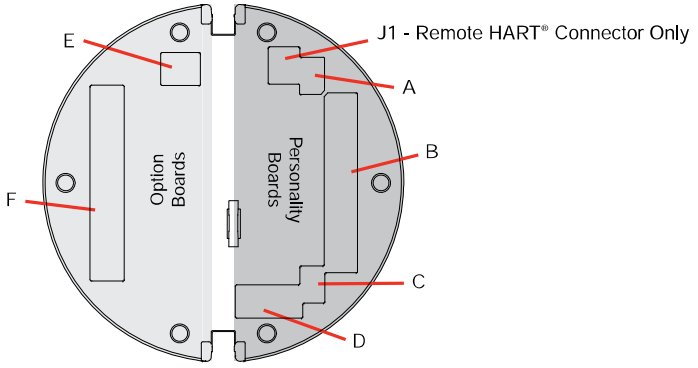

Figure 35. XNX Personality Board Terminal Block Legend

Each of the personalities use a single terminal block for connection with the exception of the IR personality, which requires a second terminal block.

The personality boards also provide a dedicated pair of jumper switches to define output of the transmitter as isolated 4-20mA, Sink 20mA, or Source 20mA as well as a service jumper to allow power to the loop to continue when the transmitter is being serviced. A separate connector is used to activate local HART (see Section 2.3.1).

Local HART provides an external access to control the transmitter. An intrinsically safe (IS) barrier inside the transmitter allows the user to attach an external hand-held interrogator for programming and configuration. The external interface is intrinsically safe. It is installed in the transmitter's lower left cable/conduit port.

Table A

Board Type	Function		S1	S2
EC Personality	4-20mA Output	Source	▼	▲
mV Personality		Sink	▲	▼
IR Personality		Isolated	▼	▼

Table B

Board Type	Connection	Function
EC Personality	TB1	Power, 4-20mA
mV Personality		Power, 4-20mA, Sensor
IR Personality		Power, 4-20mA, IR Power and Signal

Table C

Board Type	Function		S3	S4
IR Personality	IR 4-20mA Input	Source	▼	▼
		Sink	▲	▲

Table D

Board Type	Connection	Function
EC Personality	J2	EC IS Barrier
IR Personality	TB2	Com A and B

Table E

Board Type	Connection	Function
Relay	TB4	Remote Reset Connector
Modbus	SW5	Bus Loop Terminators
Foundatin Fieldbus	SW5	Simulation Mode

Table F

Board Type	Connection	Function
Relay	TB3	Relay Output
Modbus	TB3	Data Connection
Foundation Fieldbus	TB3	Data connection

Note: Open loop faults are not available due to HART, Modbus, and Foundation Fieldbus interfaces where a 4-20 signal cannot be used. In this case, open loop, 0mA must be used as the diagnostic.

The Option circuit boards vary depending upon the option selected when ordered. Only one of the three available interface options (relays, Modbus, or Foundation Fieldbus) can be attached to the XNX transmitter. When installed, connections to the options are made to connectors at the bottom of the POD.

2.2.4 4-20mA Output, Common Connections, and Power Settings

The XNX Universal Transmitter allows the user to configure the 4-20mA output to Sink, Source, or Isolated mode operation via two programming switches on the POD[1]. The Switch Configuration table shows the S1 and S2 setting and corresponding output configuration.

Switch Configuration		
Mode	**S1**	**S2**
Source	Down	Up
Sink	Up	Down
Isolated	Down	Down

Most controllers in the market will accept source-configured devices. Sink-configured signals are used in older technology controllers, which reduce the need for complete system upgrades.In isolated-signal devices, if the controller fails or the mA signal wires are disconnected or broken, the field device will remain operational. Most controllers in the market will accept isolated configured devices.

Power and 4-20mA connections are made at TB-1 and are identical for the EC, IR, and mV Personality Boards. For user convenience, a second set of +Ve and -Ve power terminals have been provided to eliminate the need for a secondary junction box in multi-node systems when used with the supplied terminal jumpers.

The total load resistance for the 4-20mA output should be kept lower than 500Ω, including the resistance of the properly selected 4-20mA cable and input impedance of the equipment to be connnected. The minimum loop impedence is 200 ohms; the maximum is 500 ohms. If the 20 mA output is not used, a 500 ohm resistor must be installed.

The XNX Universal Transmitter power consumption is dependent on the sensor and options for the specific configuration. For proper operation, the input voltage must be maintained at 16 to 32 VDC for EC and mV units and 18 to 32 VDC for IR units.

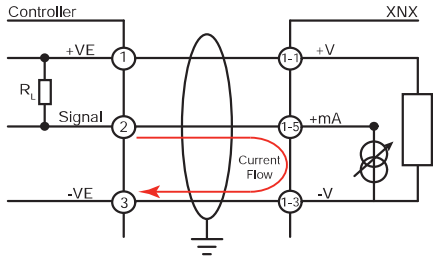

Figure 36. Sink wiring for XNX

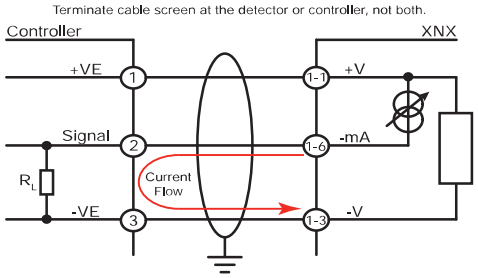

Figure 37. Source wiring for XNX

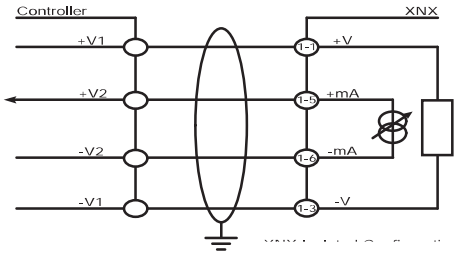

Figure 38. Isolated wiring for XNX

1 The 4-20 mA output state is refreshed at least every two seconds (once per second is typical).

Labels applied to the back of the POD identify each of the connection points.

Note: Pins 2 and 4 of terminal block TB1 have no internal connection on the personality board. When used with the terminal block jumpers, pins 2 and 4 can provide additional 4-20mA connections or supply power for daisy-chained units.

2.2.5 Foundation Fieldbus Wiring

Foundation Fieldbus connections to the XNX transmitter are made through a pluggable terminal block on the Foundation Fieldbus option board, shown in Figure 39. A simulation switch (SW5) is included on the board to enable/disable simulation mode. Terminals 3-1 through 3-4 are provided to facilitate bus wiring; there is no internal connection to other XNX circuitry. Terminal 3-1 is connected internally to 3-2. Similarly, terminal 3-3 is connected internally to 3-4.

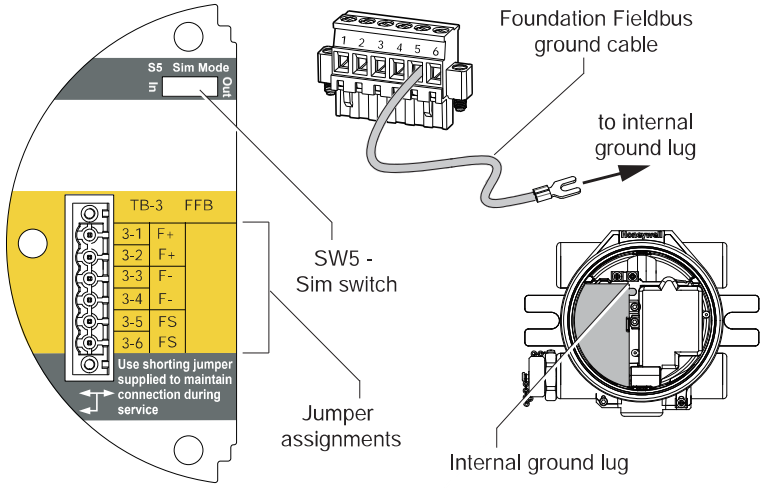

Figure 39. XNX Foundation Fieldbus option board and terminal block

2.2.6 Terminal Block Connections

Connections to the transmitter are made via pluggable terminal blocks secured to the back of the POD. The terminal blocks are keyed and polarized. A color coded label assists in wiring when the block is removed from the POD.

The terminals are suitable for use with 12 to 28 AWG or 0.8 to 2.5mm^2 wire. Wire insulation must be stripped 5/16" (0.312") or 8mm. Tighten each terminal to a maximum of 4.5 in-lbs (0.51 Nm). Up to four terminal blocks are provided; each having 2, 6, 9, or 10 positions (see the *XNX Quick Start Guide* for additional details).

Two terminal block jumpers are included to provide an electrical connection without connection to the Personality Board. Install the jumpers between pins 1 and 2 and between pins 3 and 4 to support multi-node wiring.

Warning: When the transmitter is equipped with the optional Remote Mount Kit, the remote sensor must be securely mounted in a fixed position. The Remote Sensor kit is not intednded to be used as a hand-held sensor.

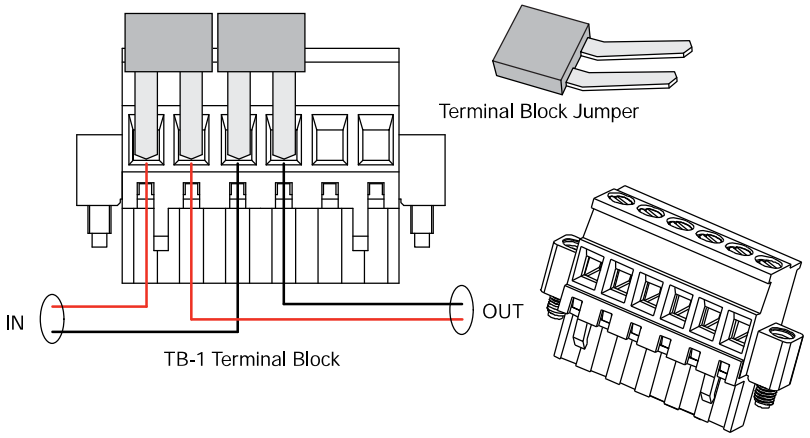

Figure 40. Pluggable Terminal Block and Terminal Block Jumper

2.2.7 EC Personality Wiring

Caution: Do not force the POD into the enclosure. Doing so may result in damage to the wiring or the POD or may alter the switch settings. If resistance is felt, wires may be preventing the POD from being properly positioned.

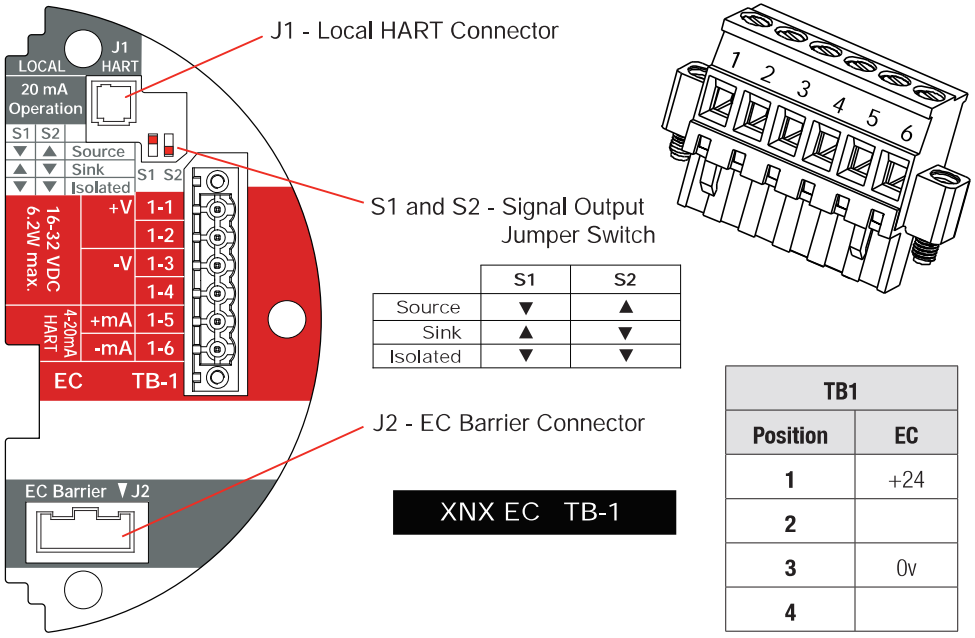

	S1	S2
Source	▼	▲
Sink	▲	▼
Isolated	▼	▼

TB1	
Position	**EC**
1	+24
2	
3	0v
4	

Figure 41. XNX EC Personality Board Terminal Blocks and Jumper Switches and Terminal Block Assignments

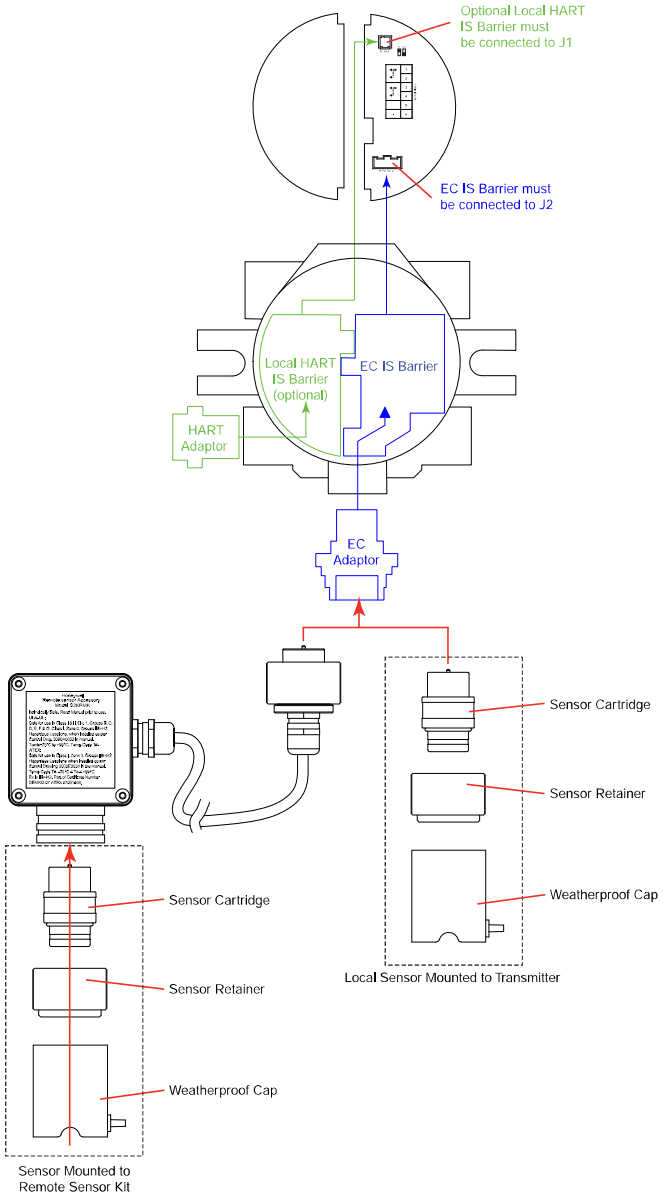

Figure 42. EC Personality Wiring

XNX Electrochemical Sensor Installation

EC Sensor Installation

Caution: A missing oxygen cell will result in 0% V/V O_2 gas concentration, thus triggering alarm events. In this situation, check the connection of the EC cell to the sensor connector board.

Caution: For biased sensors (e.g., nitrogen dioxide) remove the sensor stabilizer from the bottom of the sensor prior to installation.

Using Figure 42 as a guide, follow this procedure:

1. Verify that the label on the new sensor is the correct gas type.
2. Unscrew the weatherproof cover, loosen the retainer locking screw with the supplied hex key, and unscrew the sensor retainer.
3. Plug in the new sensor. Take care to align the sensor pins with the connector.
4. Refit the sensor retainer, tighten the locking screw with the hex key, and refit the weatherproof cover. Countdown time of up to 180 seconds (depending on the sensor type) will be displayed.
5. Acknowledgement of the gas type will be required before proceeding. For more information on setting gas type, see Section 2.5.1 Gas Selection.

6. After the sensor is installed and the gas type is confirmed, the range, alarm levels, and other important settings must be set; see Section 2.5.
7. After the transmitter has been configured, calibrate the sensor following the procedures in Section 3 - Calibrations.

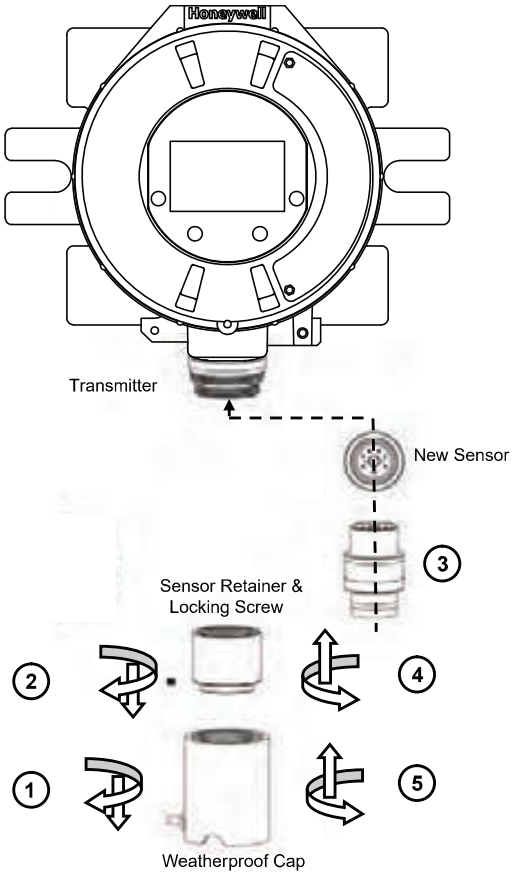

Figure 43. Installing Plug In Sensor

Note: Reference Control Drawing 3000E3157 and 3000E3159 for install requirements on EC cells and remote mounting.

XNX EC Sensor Remote Mounting Kit

The remote sensor mounting kit is used to mount the XNX EC sensor up to 50 feet away from the transmitter. To mount the sensor remotely, follow this procedure:

1. Unscrew the weatherproof cover, loosen the retainer locking screw and unscrew the sensor retainer.
2. Remove the sensor by pulling without twisting.
3. Plug the remote sensor cable connector into the bottom of the transmitter.
4. Route the cable to the location where the remote sensor is to be mounted.
5. Optional: make a loop of cable at the junction box. This will provide some slack for any future re-terminations.
6. If necessary, cut the cable to the required length.

Caution: Take care not to cut the cable too short. Once cut, additional lengths of cable cannot be added as this would invalidate the intrinsically safe certification.

Warning: Enclosures of remotely mounted sensors contain aluminum. Be careful to avoid ignition hazards due to impact or friction when installed in Zone 1 locations.

7. Mount the remote sensor junction box ensuring enough room below to fit the sensor and weatherproof cover. See control drawing 3000E3157 in Section 7.2 for specific mounting information.
8. Attach the cable to the remote terminal box via the gland provided.
9. Make the wiring connections as shown in Figure 43.
10. Fit the Terminal box lid.
11. Plug the sensor into the socket at the bottom of the terminal box.
12. Fit the sensor retainer, tighten the locking screw, and fit the weatherproof cover.
13. Calibrate the sensor following the procedure in Section 3.2.1.

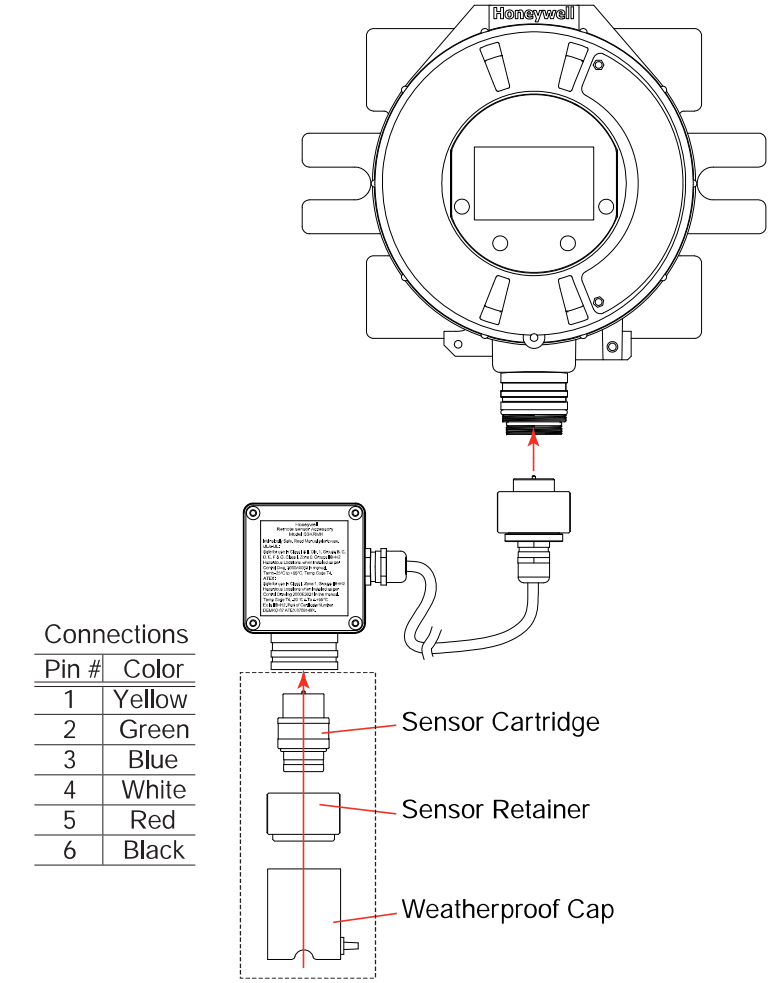

Connections

Pin #	Color
1	Yellow
2	Green
3	Blue
4	White
5	Red
6	Black

Sensor Mounted to Remote Sensor Kit

Figure 44. Installing Remote Sensor Mounting Kit

2.2.8 mV Personality Wiring

XNX Universal Transmitter with the mV personality Board allows interface to HA's Multi Purpose Detector (MPD) and field proven 705 and Sensepoint devices.



Caution: See Section 6 - Specifications to ensure that the transmitter and the mV sensor have the appropriate approvals prior to commissioning.



Caution: Verify that the mV sensor being installed has compatible threads (3/4 NPT or M25).

Read Section 2.2 which defines the XNX power and 4-20mA output connections that are common to all personalities.

Connections from the mV Sensor to the XNX are made via a single pluggable terminal block allowing ease of installation and service. Honeywell Analytics recommends that an 8" (203 mm) service length for wiring be maintained. The wire colors for the connections for each sensor type are shown in the following Wire Color from Sensor table.

Verify that wires for 4-20mA outputs are routed away from sources of noise such as relay wires.

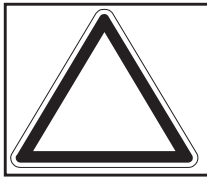

Note: The black and red wires from the MPD are not used with the XNX mV personality board. Ensure that they are properly isolated from live connections. Do NOT cut the wires.



Caution: Do not force the POD into the enclosure. Doing so may result in damage to the wiring or the POD or may alter the switch settings. If resistance is felt, wires may be preventing the POD from being properly positioned.



Caution: Be certain to dress the wires properly to ensure cabling does not contact switches 1-2 on the back of the POD.

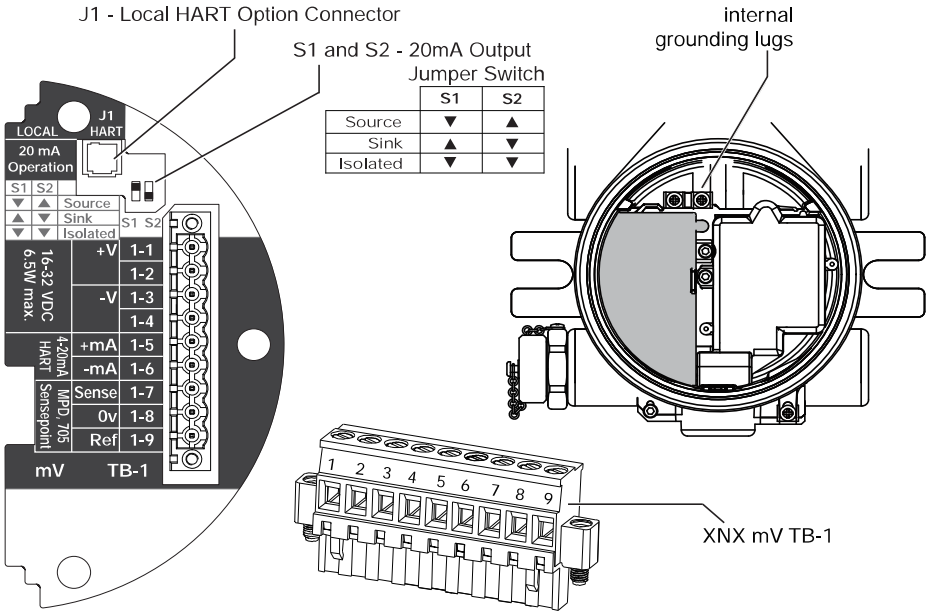

Figure 45. mV personality board terminal blocks and jumper switches.

TB-1	Desc.	Wire Color from Sensor						
		mV Catalytic Bead Sensor			Sensept PPM*	mv MPD w/IR Sensor		
		MPD	705 705HT	Sensept Senspt HT		IR 5%		IR Flam
						CO_2	CH_4	
Pins 1-6		See subsections in Section 2.2.4 for pin identification						
7	Sense	Brown			Red	Brown		
8	0v	White			Green	White		
9	Ref	Blue			Blue	Blue		

*Internal earth ground; approximately one inch of the black sheath that contains the Sensepoint PPM's four wires (red, blue, green, silver) must be split to allow the silver grounding wire to reach the internal grounding lugs.

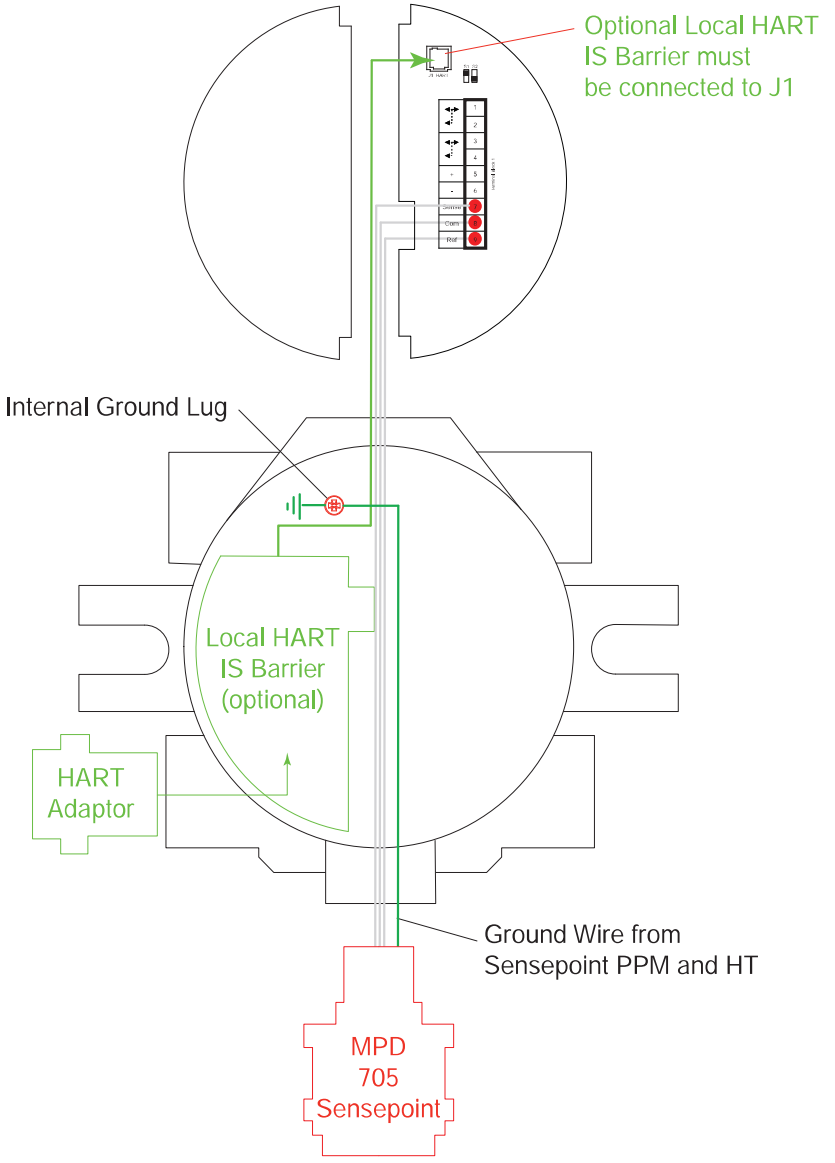

Figure 46. mV Personality Wiring

mV Remote Sensor Mounting

The sensor can be mounted remotely from the transmitter; the installation will vary by installed location, sensor and thread type used. To remotely mount the sensor, follow this procedure:

1. Unscrew the transmitter's weatherproof cover and loosen the retainer locking screw with the supplied hex key.
2. Run conduit from one of the transmitter's available conduit ports to the location of the remote terminal housing.

   A terminal housing provides a mounting base for the sensor. The installation wiring enters the terminal housing via conduit.

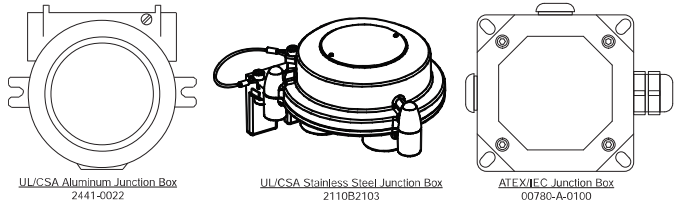

Figure 47. Remote Terminal Housings

The distance between the XNX Transmitter and remote installation must comply with these parameters to insure proper operation. Distances are dependent on sensor types and the wire gauge used.

AWG	Metric Wire Gauge	MPD CB1, 705 Series. Sensepoint Series Sensors	MPD IC1, IV1 & IF1 Sensors
24	0.25 mm^2	12m (47 ft.)	30m (97 ft.)
22		20m (65 ft.)	50m (162 ft.)
20	0.5 mm^2	30m (97 ft.)	80m (260 ft.)
18		50m (162 ft.)	120m (390 ft.)*
16	1.0 mm^2	80m (260 ft.)*	200m (650 ft.)*

* Frequency of Zero calibration may increase due to the changes in wire resistance from changing temperature.

3. Wire the pluggable terminal block as shown in Figure 45 then plug the connector into the back of the mV personality board. In remote mount MPD configurations, the 3 wires connecting the pluggable terminal block and the remote MPD must be routed through the supplied ferrite bead (Honeywell Analytics part no. 0060-1051, supplied in the accessory kit) as shown in Figure 48.

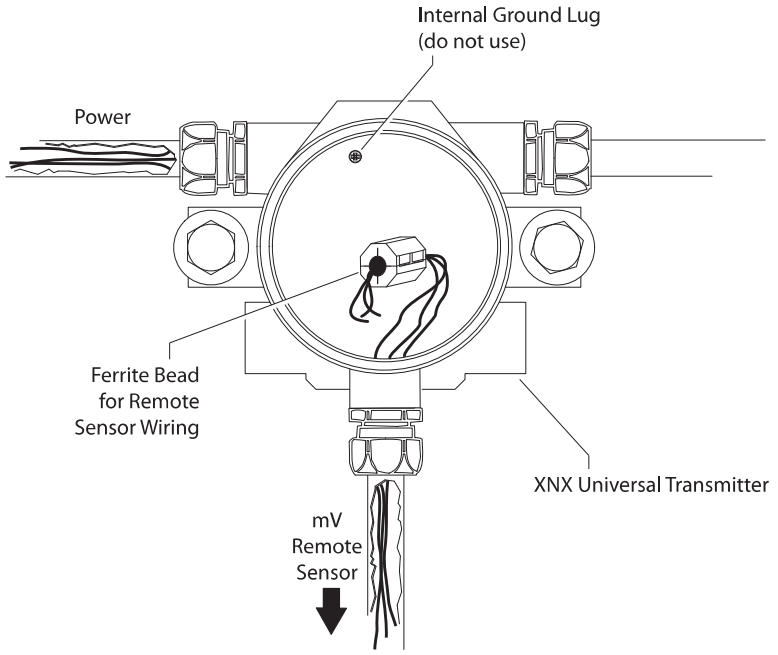

Figure 48. Ferrite bead wiring

4. Mount the remote sensor junction box with sufficient room below to fit the sensor and weatherproof cover.

Warning: Install the junction box according to local codes and manufacturer's requirements.

5. Attach the conduit to the remote terminal box.
6. In the remote junction box, connect the wires from the transmitter to the 3-way terminal block in the terminal box.

Note: The black and red wires from the MPD are not used with the XNX mV personality board. Ensure that they are properly isolated from live connections. Do NOT cut the wires.

Warning: The enclosures of remotely mounted 705HT sensors contain aluminum. Be careful to avoid ignition hazards due to impact or friction when installed in Zone 1 locations.

All cable port devices and blanking elements shall be certified in type of explosion protection flameproof enclosure “Ex d” or “Ex e”, suitable for the conditions of use and correctly installed.

7. Attach and wire the sensor in the terminal box.
8. Fit the terminal box lid.
9. Fit the sensor.
10. Calibrate the sensor following the procedure in Section 3.2 - Calibration.

2.2.9 IR Personality Wiring

The XNX Universal Transmitter allows local programming and configuration through the local LCD display as well as through the HART protocol. Gas concentrations can be read at the transmitter from Searchpoint Optima Plus or Searchline Excel, via 4-20mA output as well as from the digital communication connection on TB2 that can provide additional diagnostic information. The gas concentration is taken from the digital communication line as long as it is in agreement with the 4-20 mA output, otherwise the 4-20mA output takes precedence.

Caution: Dress the wires properly so that cabling does not contact switches 1-4 on the back of the POD.

The transmitter provides a 4-20mA output reflecting the input received. It also offers diagnostic information or data via HART or any of the additional communication options offered.

Read Section 2.2 which defines the XNX power and 4-20mA output connections that are common to all personalities.

Warning: Power off the transmitter before changing S3 or S4. Both switches must be set in either Source or Sink prior to applying power.

Caution: Do not force the POD into the enclosure. Doing so may result in damage to the wiring or the POD or may alter the switch settings. If resistance is felt, wires may be preventing the POD from being properly positioned.

Do not adjust switch settings while power is applied to the transmitter; doing so will cause permanent damage.

Connecting a Searchpoint Optima Plus or Searchline Excel

Connections from the Searchpoint Optima Plus or Searchline Excel to the transmitter are made via two pluggable terminal blocks allowing ease of installation and service (see Figure 49). HA recommends that an 8” service length of wiring be maintained.

In remote mount configurations, the maximum distance between

the XNX Transmitter and Optima Plus or Excel is 100 feet (33 meters) using 0.75 mm² (18 AWG) wire minimum.

Note: A second, black-handled screwdriver is included for use on terminal blocks 2 and 4. This tool is smaller than the magnetic wand and is designed to fit into the terminal connections on TB2 and TB4.

The Searchpoint Optima Plus or Searchline Excel can be supplied in either Sink or Source mode operation and is typically labeled on the white wire exiting the Searchpoint Optima Plus or Searchline Excel. Use the table in Figure 50 to set S3 and S4 to the same output type that appears on the wire tag of the IR device.

For more information see the Searchpoint Optima Plus Operating Instructions (2104M0508) or the Searchline Excel Technical Manual (2104M0506).

Connecting Generic mA Devices

Use the following schematics to set switches S3 and S4 They *must* be set to the same output type (which appears on the wire tag of the mA device).

The IR personality type provides for a generic mA input under sensor type configuration. The transmitter can be used to convert the mA input to be read over HART or optional Modbus or Foundation Fieldbus protocols and set optional relays (if equipped). Additional configuration of gas type and unit ID for reporting is required (see Gas Selection). For Generic mA devices, input values below 3mA will generate Fault 155.

XNX S3 and S4 must be in the UP position
Set mA Device and XNX to the same output type.

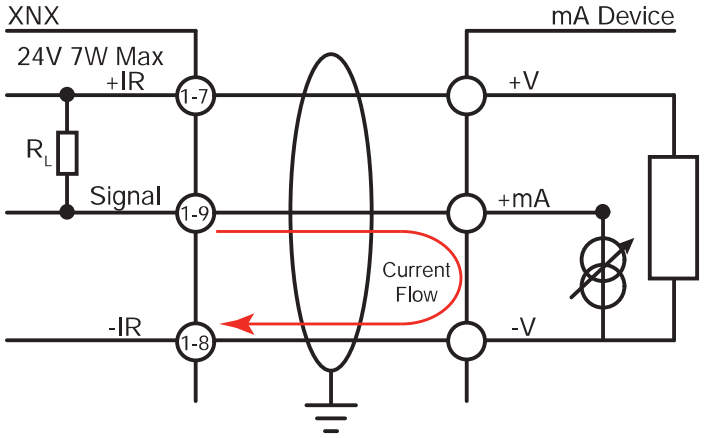

Figure 49. XNX mA input sink configuration

XNX S3 and S4 must be in the DOWN position
Set mA Device and XNX to the same output type.

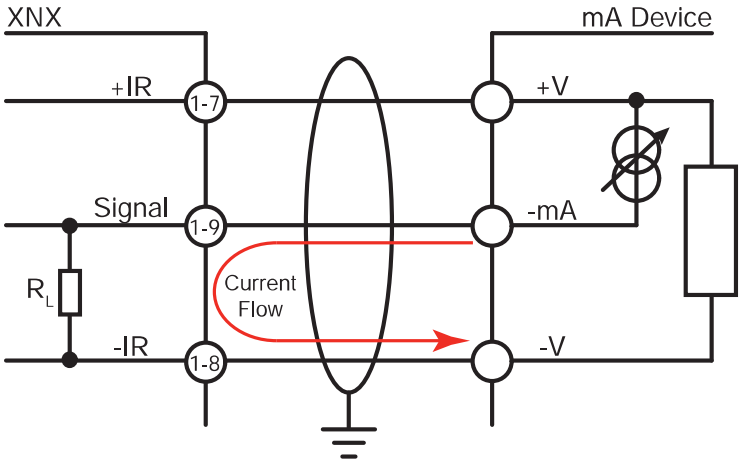

Figure 50. XNX mA input source configuration

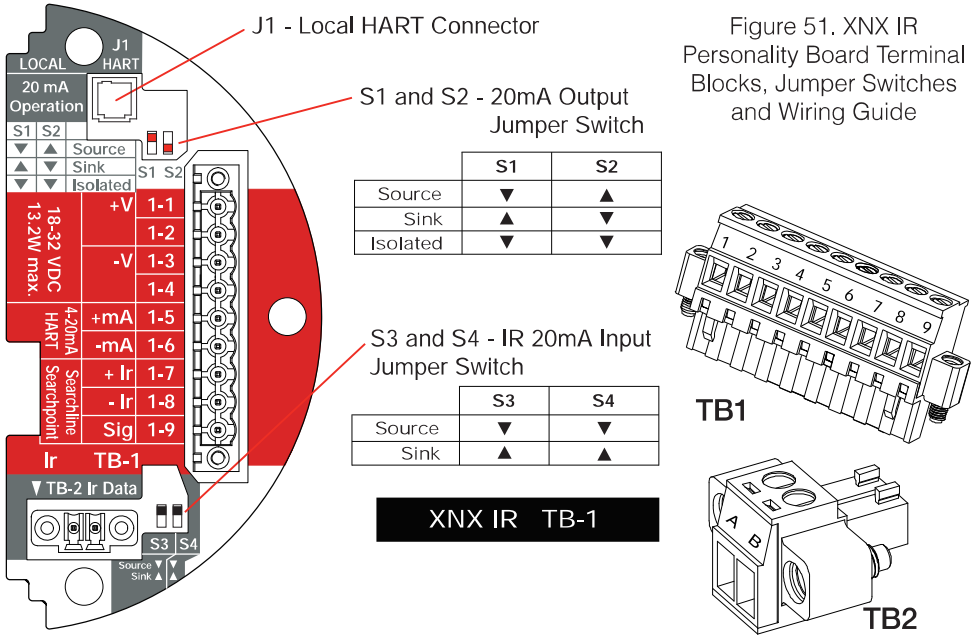

	S1	S2
Source	▼	▲
Sink	▲	▼
Isolated	▼	▼

	S3	S4
Source	▼	▼
Sink	▲	▲

Figure 51. XNX IR Personality Board Terminal Blocks, Jumper Switches and Wiring Guide

TB1		
Terminal No.	**Desc.**	**From Searchpoint Optima Plus Searchline Excel**
1	+24v	See Section 2.2.4 Common Connections .
2		
3	0 VDC	
4		
5	+20mA	
6	-20mA	
7	+24VDC	Red
8	0VDC	Black
9	Sig - 20mA	White

TB2	
Terminal No.	**From Searchpoint Optima Plus Searchline Excel**
A	Blue
B	Orange

XNX	
Desc.	**From Searchpoint Optima Plus Searchline Excel**
Earth	Green/Yellow

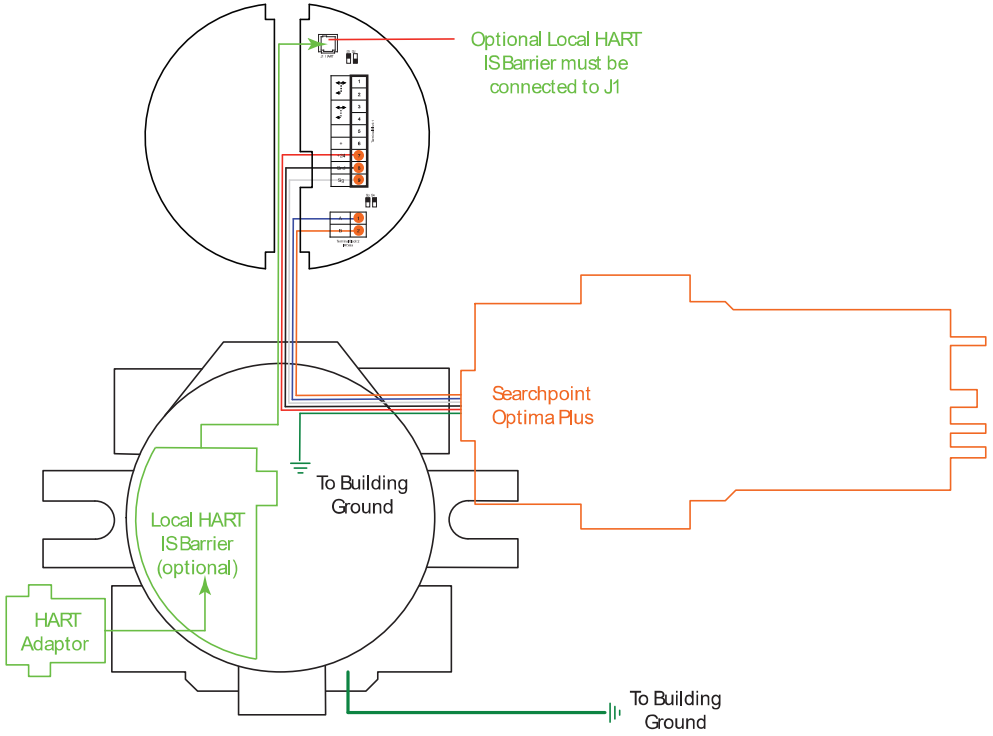

Figure 52. IR Personality Wiring - Searchpoint Optima Plus

Note:
Honeywell Aanalytics recommends that Excel or Optima and the XNX transmitter be wired to building ground. The system should be grounded at only one point.

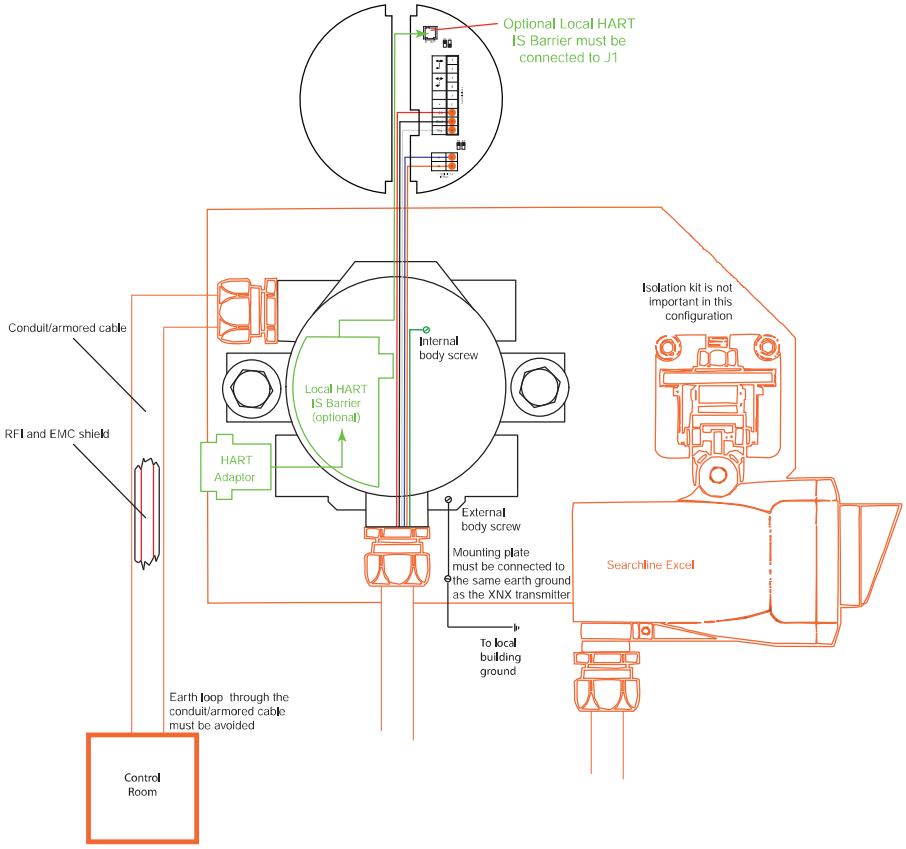

Figure 53. IR Personality Wiring - Searchline Excel

Attaching the Searchpoint Optima Plus to the XNX Universal Transmitter

For M25 entries, insert the seal (P/N 1226-0410) into the proper cable/conduit opening then thread the locknut (P/N 1226-0409) onto the Optima to the end of the threads. Thread the Optima body into the transmitter until the seal compresses and/or the Optima bottoms out. Reverse until the semi-circular pattern of holes on the front of the weather protection are on the bottom (see below). Tighten the locknut to the XNX body.

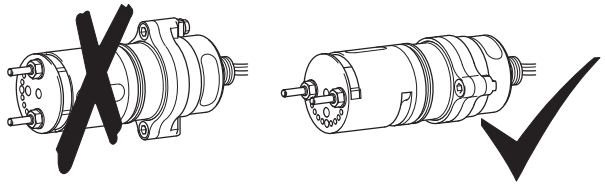

Figure 54. Searchpoint Optima Plus orientation

The 3/4” NPT ports do not require the seal and locknut. The form of the threads provide positive locking and sealing.

Note: When attaching the Searchpoint Optima Plus, coat the threads with an anti-seize compound to prevent corrosion.

Searchline Excel and Searchpoint Optima Plus Remote Installation

Junction Boxes are available for the Searchline Excel and Searchpoint Optima Plus to facilitate remote mounting from the XNX Universal Transmitter. Junction boxes are available for installations requiring UL/CSA or ATEX approvals. Consult

the Searchline Excel Technical Handbook (2104M0506) or Searchpoint Optima Plus Operating Instructions (2104M0508) for specifics on remote installations or contact your Honeywell Analytics representative for more information.

Searchpoint Optima Plus or Searchline Excel Wiring Recommendations

When wiring the XNX transmitter and the Searchpoint Optima Plus or Searchline Excel for remote applications, the general recommendations of the ANSI/TIA/EIA-485-A standard must be adhered to with the following additions:

1. When mounting the Searchline Excel or Searchpoint Optima Plus, run wiring connections between each Excel or Optima and the transmitter in a dedicated separate conduit.
2. Use 18 AWG twisted shielded cable for the RS485 connection between Excel or Optima and the XNX. Make sure that the shield of the cable is grounded to earth and XNX ground on one end ONLY.
3. Avoid running wiring near main cables or other high voltage equipment.
4. Do *not* apply 120 ohm terminating resistors. These resistors are not required due to low data rates.
5. Honeywell Analytics recommends that Excel or Optima sensors and the XNX transmitter be wired to building ground. The system should be grounded at one point only.

INSTALLATION TIP:

Always perform a soft reset after connecting the Searchpoint Optima and XNX transmitter for the first time. The soft reset is performed by accessing the transmitter's Calibration Menu.

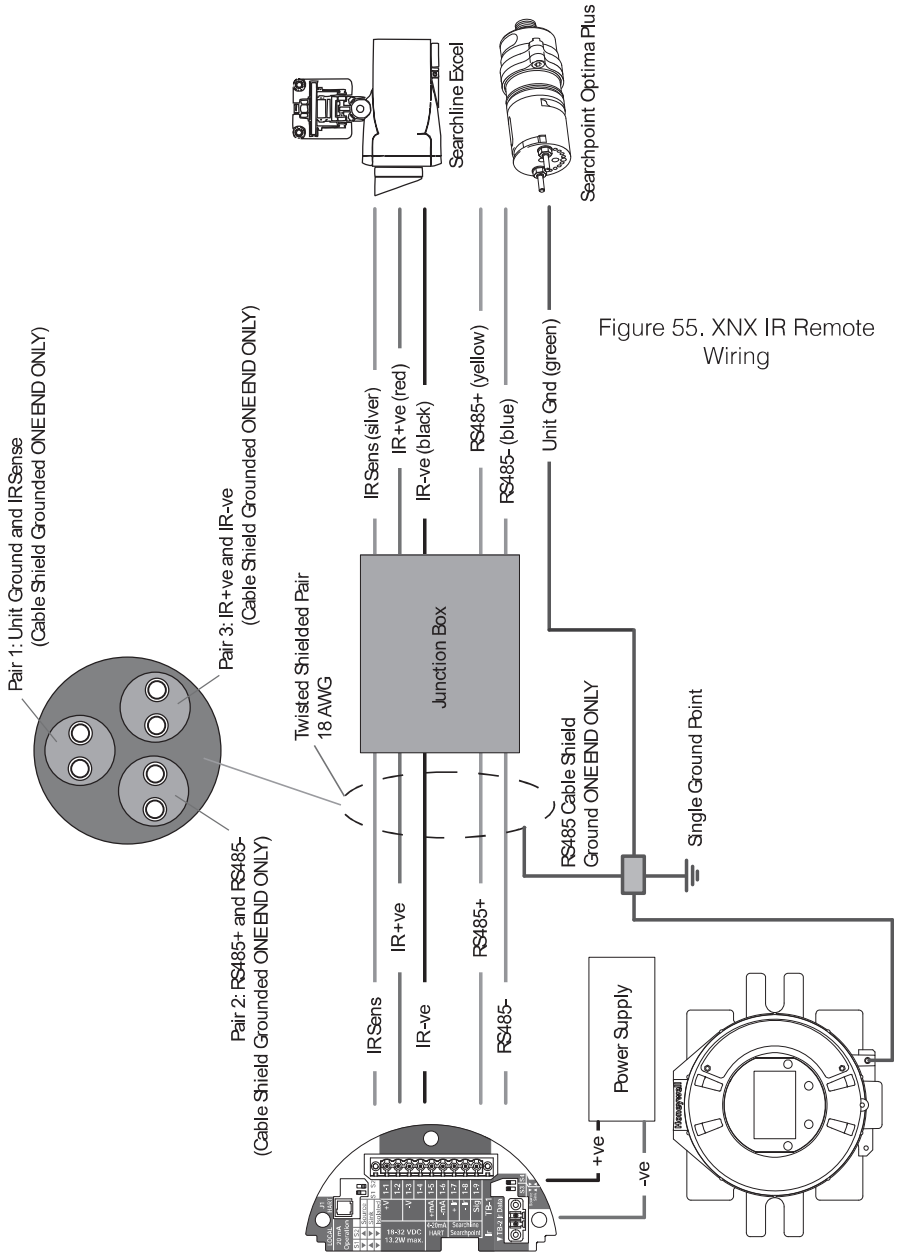

Figure 55. XNX IR Remote Wiring

2.3 Options

2.3.1 Local HART Interface

Available with any sensor technology or option, this option provides an external access to the HART interface in the transmitter. An IS barrier inside the transmitter allows the user to attach an external hand-held interrogator for programming and configuration. The external interface is installed in the lower left cable/conduit port of the transmitter and is intrinsically safe (IS).

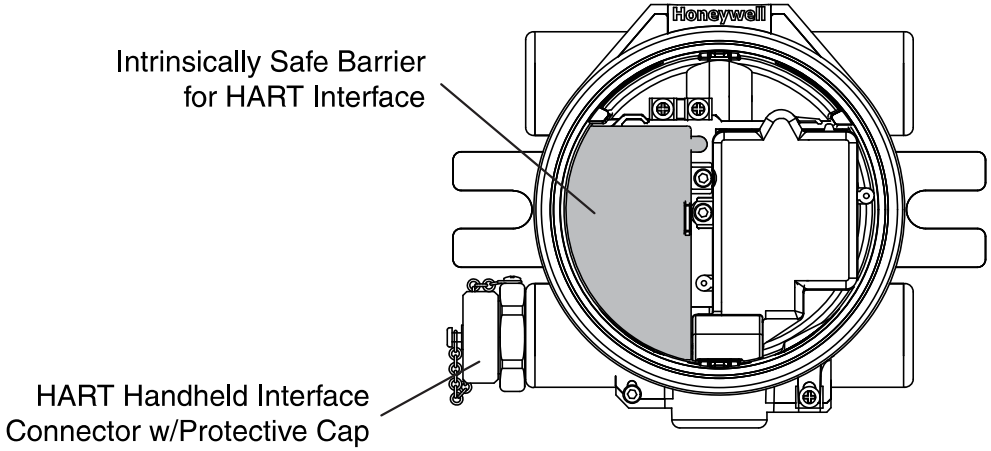

Figure 56. XNX Universal Transmitter with HART Interface IS Barrier installed

The HART protocol is a communication technology used with smart process instrumentation, providing two-way digital communication simultaneously with the 4-20mA analog signaling used by traditional instrumentation equipment. For more detailed information on HART, see the HART Protocol and www.hartcomm.org.

Implementation of the HART protocol in the XNX transmitter:

- Meets HART 6.0 physical layer specification
- The physical layer is tested according to HART Physical Layer Test Procedure, HCF_TEST-2.
- Data transfer rate: 1200 bps.

HART devices can operate in point-to-point or multidrop configurations.

Caution: Device address changes must be performed only by qualified service personnel.

Point-to-Point Mode

In point-to-point mode, the 4–20 mA signal is used to communicate one process variable, while additional process variables, configuration parameters, and other device data are transferred digitally via HART protocol (Figure 57). The 4–20 mA analog signal is not affected by the HART signal.

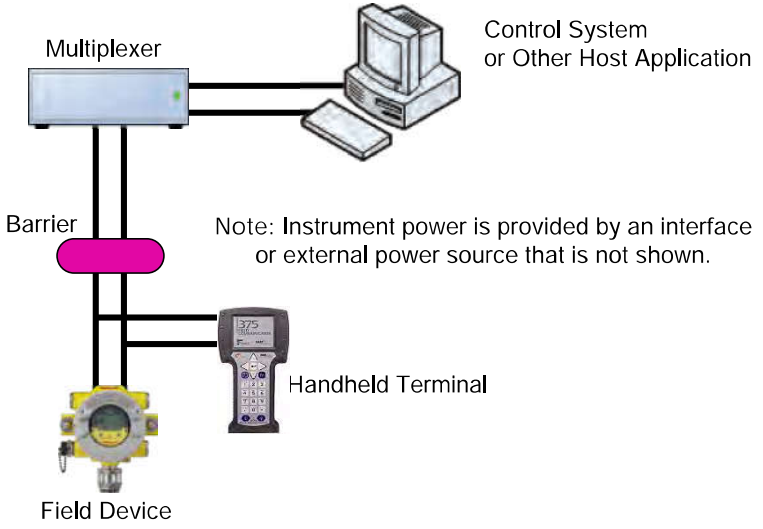

Figure 57. Point-to-Point Mode of Operation

Multidrop Mode

The multidrop mode of operation requires only a single pair of wires and, if applicable, safety barriers and an auxiliary power supply for up to 8 field devices (Figure 58). All process values are transmitted digitally. In multidrop mode, all field device polling addresses are >0, and the current through each device is fixed at a minimum value (typically 4 mA).

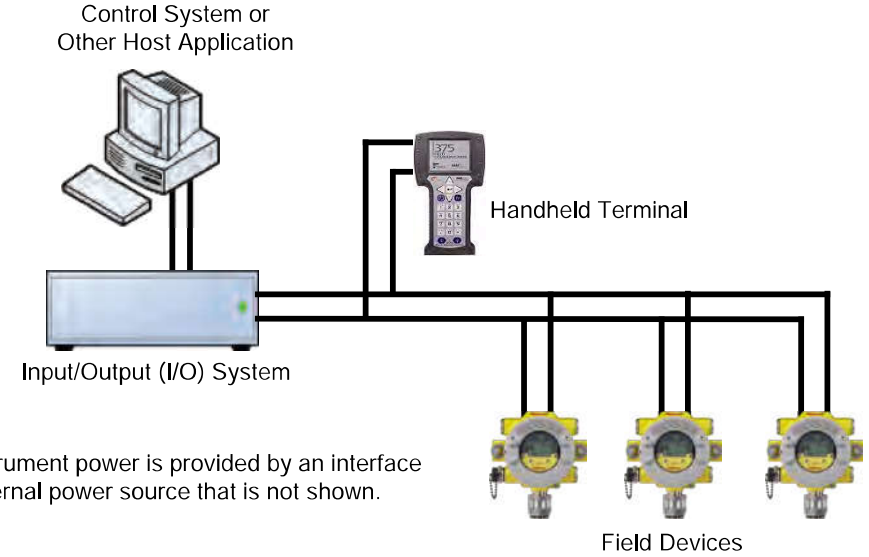

Note: Instrument power is provided by an interface or external power source that is not shown.

Figure 58. Multidrop Mode of Operation

Note: Use multidrop connection for supervisory control installations that are widely spaced, such as pipelines, custody transfer stations, and tank farms.

In general, the installation practice for HART devices is the same as conventional 4-20mA instrumentation. Individually shielded twisted pair cable, either in single-pair or multi-pair varieties, is the recommended wiring practice. Unshielded cables may be used for short distances if ambient noise and cross-talk will not affect communication.

The minimum conductor size is 0.51mm diameter (#24 AWG) for cable runs of less than 5,000 ft (1,524m) and 0.81mm diameter (#20 AWG) for longer distances.

Cable Length

Most installations are well within the 10,000 ft (3,000 m) theoretical limit for HART communication. However, the electrical characteristics of the cable (mostly capacitance) and the combination of connected devices can affect the maximum allowable cable length of a HART network. The table below shows the effect of cable capacitance and the number of network devices on cable length. The table is based on typical installations of HART devices in non-IS environments, i.e. no miscellaneous series impedance.

Detailed information for determining the maximum cable length for any HART network configuration can be found in the HART Physical Layer Specifications.

Cable Capacitance – pf/ft (pf/m) Allowable Cable Lengths for 1 mm (18 AWG) Shielded Twisted Pair – feet (meters)				
Number of Network Devices	**20 pf/ft (65 pf/m)**	**30 pf/ft (95 pf/m)**	**50 pf/ft (160 pf/m)**	**70 pf/ft (225 pf/m)**
1	9,000 ft (2,769 m)	6,500 ft (2,000 m)	4,200 ft (1,292 m)	3,200 ft (985 m)
5	8,000 ft (2,462 m)	5,900 ft (1,815 m)	3,700 ft (1,138 m)	2,900 ft (892 m)
8	7,000 ft (2,154 m)	5,200 ft (1,600 m)	3,300 ft (1,015 m)	2,500 ft 769 m)

2.3.2 Relays

The relay option (XNX-Relay) provides 3 form “C” SPCO contacts for alarm and fault indication. TB4 allows alarms to be reset remotely.

Note: This option is not available when the Modbus or Foundation Fieldbus options are installed.

Wiring for the relays is through an available cable/conduit port to a pluggable terminal block. See Figure 35 for the terminal block legend.

Note: A second, black-handled screwdriver is included for use on terminal blocks 2 and 4. This tool is smaller than the magnetic wand and is designed to fit into the terminal connections on TB4.

The XNX transmitter has three relays: relay 1 is for alarm level 1, relay 2 is for alarm level 2, and relay 3 is for faults and special states. All special states are indicated by the fault relay.

Honeywell Analytics recommends that the fault relay be used in all installations to maintain safe operation. See Set Alarm Values for more information.

The relay state is refreshed every 2 seconds. The fault relay is normally energized indicating proper operation. In the event of power failure or fault, the C-NO connection will open.

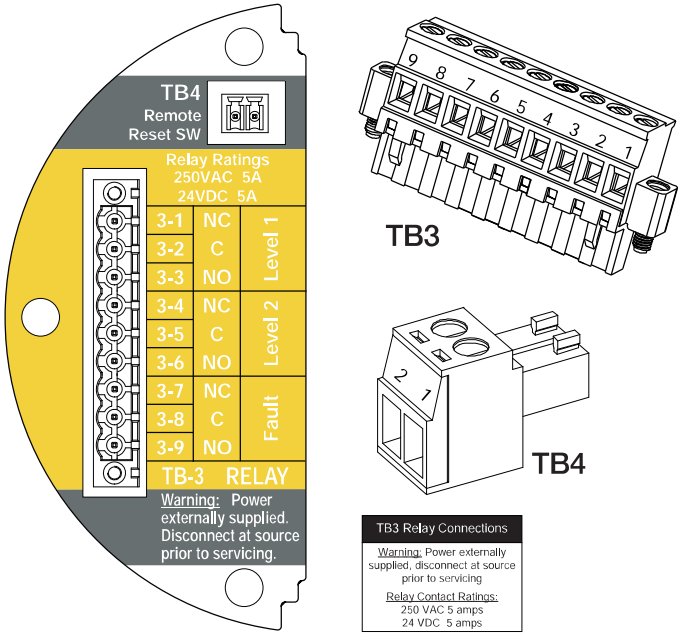

Relay	
TB3	
1	NC
2	C
3	NO
4	NC
5	C
6	NO
7	NC
8	C
9	NO
TB4	
1	1
2	2

Figure 59. XNX Relay Option Board Terminal Blocks

2.3.3 Modbus

The optional Modbus interface allows all transmitter local user interface (LUI) functions and parameter settings to be transmitted.

Modbus is a master-slaves protocol. Only one master (at a time) is connected to the bus. Up to 247 slave nodes are also connected to the same serial bus. Modbus communication is always initiated by the master. The slave nodes never transmit data without receiving a request from the master node. The slave nodes never communicate with each other. The master node initiates only one Modbus transaction at a time.

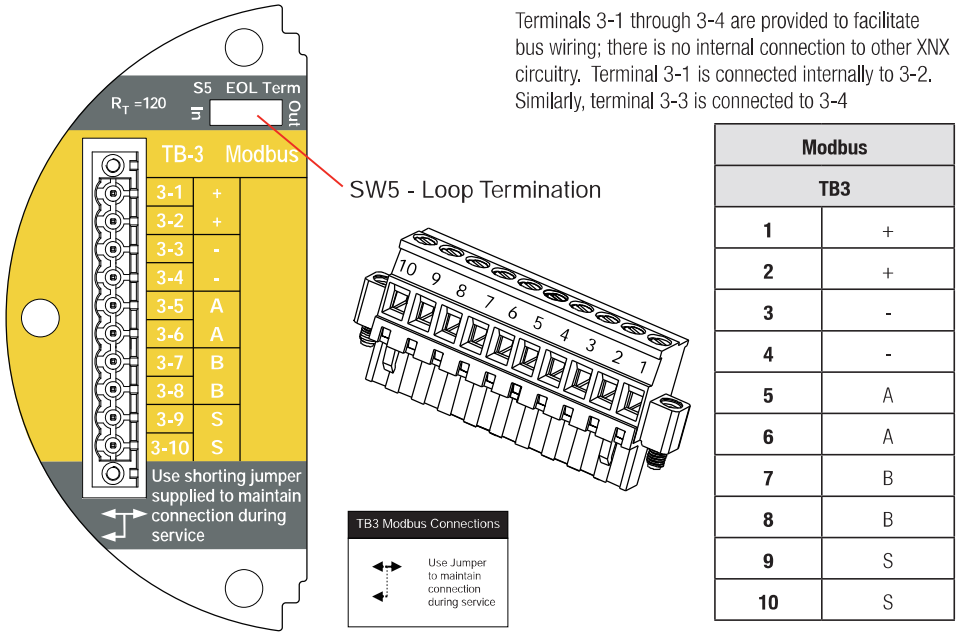

Terminals 3-1 through 3-4 are provided to facilitate bus wiring; there is no internal connection to other XNX circuitry. Terminal 3-1 is connected internally to 3-2. Similarly, terminal 3-3 is connected to 3-4

Modbus	
TB3	
1	+
2	+
3	-
4	-
5	A
6	A
7	B
8	B
9	S
10	S

Figure 60. XNX Modbus Option Board Terminal Block / Jumper Switch

Modbus connections to the XNX are made through a pluggable terminal block on the Modbus interface circuit board. Modbus RTU protocol uses ASCII/Hex protocols for communication. See Figure 35 for the terminal block legend. A loop termination point (SW5) is included on the Modbus interface board to provide termination of the Modbus loop.

2.3.4 Foundation Fieldbus

Foundation Fieldbus connections to the XNX transmitter are made through a pluggable terminal block on the Foundation Fieldbus option board, shown in Figure 60. A simulation switch (SW5) is included on the board to enable/disable simulation mode. Terminals 3-1 through 3-4 are provided to facilitate bus wiring; there is no internal connection to other XNX circuitry. Terminal 3-1 is connected internally to 3-2. Similarly, terminal 3-3 is connected internally to 3-4.

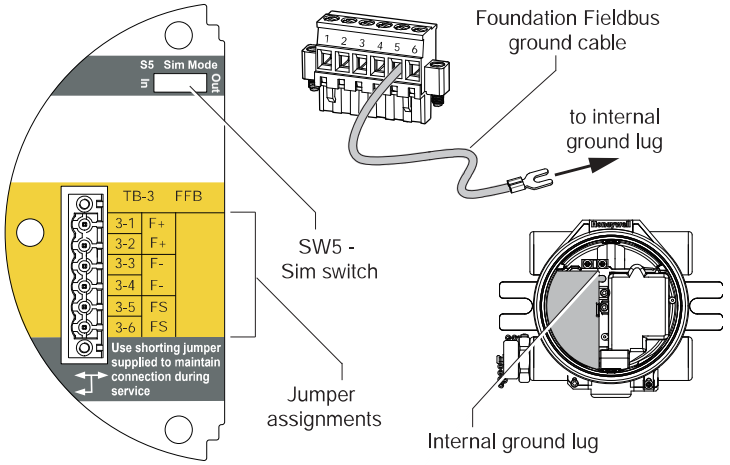

Foundation Fieldbus	
TB3	
1	F+
2	F+
3	F-
4	F-
5	FS
6	FS

Figure 61. Foundation Fieldbus Option Board, Terminal Block, Jumper Switch

2.4 Powering the XNX for the First Time

2.4.1 XNX Units Configured for EC, mV, and IR (except Searchline Excel)

After mounting, wiring the transmitter, wiring the specific mV or IR sensor or installing the EC cartridge, the installation is visually and electrically tested as described below.

Warning: Minimum and maximum controller alarm levels should not be set at less than 10% or greater than 90% of the full scale range of the sensor. CSA and FM agency limits are 60% LEL or 0.6mg/m^3.

1. Verify that the transmitter is wired correctly according to this manual and the associated control equipment manual.
2. If equipped, unscrew the weatherproof cover, loosen the sensor retainer locking screw, and unscrew the retainer.
3. For EC sensors, plug in the sensor cartridge, taking care to align the sensor pins with the connector holes in the PCB.

Caution: For toxic sensors, remove the shorting clip from the bottom of the sensor prior to installation. No shorting clip is provided with O_2 sensors.

4. Refit the sensor retainer, tighten the locking screw and refit the weatherproof cover.

Note: Before replacing the cover on the transmitter housing, coat the threads with anti-seize compound to prevent corrosion buildup.

Note: Inspect the cover O-ring for cracking or any other defects that might compromise the integrity of the seal. If it is damaged, replace with the O-ring supplied in the accessory kit.

5. Apply power to the transmitter. This will in turn provide power to the sensor.
6. During warmup, the XNX transmitter will be forced to 2mA (inhibit mode).
7. The transmitter will enter a boot-up routine displaying the initialization screen. The transmitter loads its operating system, data from the sensor, sensor software version numbers, gas type, the detection range and span calibration gas level, estimated time to next calibration due, and self test result. This will take about 45 seconds.

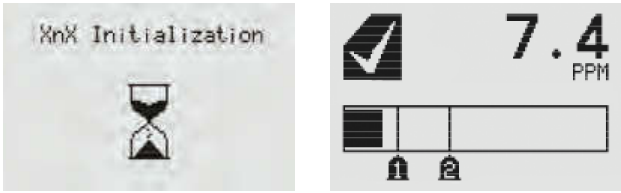

Figure 62. XNX Initialization and General Status Screens

In the final stages of boot-up, warnings and faults may be observed until the user performs the proper configuration, calibration, and reset activities described in the following sections. See Section 5 for descriptions of warnings and faults.

Once the General Status screen appears, the transmitter and sensor are in normal monitoring mode.

Note: Calibration of sensors attached to the transmitter is mandatory before the sensor can be used for gas monitoring. Refer to Section 3 - Calibration for the procedure.

Note: For initial commissioning, refer to EN 60079-29-2.

2.4.2 LCD and LED Test

The LCD and LED test is performed in the initialization after powering on. All LCD pixels and LEDs (red, green, and yellow) are turned on for 1.5 seconds. The LCD then goes blank and the LEDs turn off.

2.4.3 XNX IR Units Configured for Searchline Excel

When powering the transmitter fitted with a Searchline Excel sensor, the following procedure must be followed to assure proper installation.

1. Verify that the transmitter is wired correctly according to this manual and the associated control equipment manual.
2. Apply power to the XNX transmitter. This will in turn provide power to the sensor.
3. The sensor output will be forced to 2mA (default fault/ inhibit).
4. The XNX transmitter will enter a boot-up routine, displaying the initialization screen. The transmitter will load its operating system, data from the sensor, sensor software version numbers, gas type, the detection range and span calibration gas level, estimated time to next calibration due, and self test result. This will take about 45 seconds.

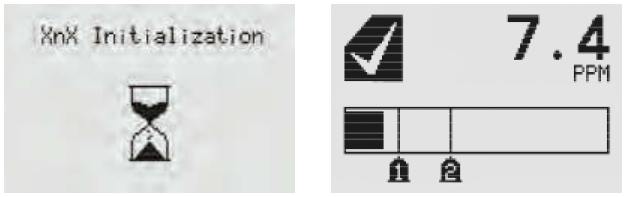

Figure 63. XNX Initialization and General Status Screens

In the final stages of boot-up, warnings and faults may be observed until the user performs the proper configuration, calibration, and reset activities described in the following sections. See Section 5 for descriptions of warnings and faults.

5. When the XNX completes boot-up, perform a soft reset (see Section 3.6 Soft Reset) on the Excel sensor from the Calibration Menu. When the soft reset is intitated, the RS-485 communication will be temporarily interrupted and faults F120 and/or F161 may be observed. The RS-485 communication will be re-established in a few minutes and the faults will automatically be reset in the Non-Latching mode. F120 and/or F161 must be reset manually in the Latching mode.
6. Set the Path Length for the application, then align the transmitter and receiver (see Section 3.5 Align Excel).
7. Once the alignment is complete, a Zero Calibration must be performed on the Excel sensor to complete the commissioning process. (See the Searchline Excel

Technical Manual for calibration information P/N 2104M0506).

8. Reset any faults that appear in the transmitter's display. The XNX transmitter and Searchline Excel sensor are now ready to monitor.

2.5 Configuring the XNX Universal Transmitter

The XNX Universal Transmitter can be configured via the front panel by using the menus available in Configure Menu. For information on accessing and navigating the menus, see Section 1.4.1.

2.5.1 Configure Menu

Functions in the Configure Menu and the security levels required to change them are explained in this table.

Symbol	Description	Security Level
	Select Language	1
	Set Date & Time	1
	Set mV Sensor Type	2
	Set mA Sensor Type	2
	Gas Selection	2
	Range & Alarms	2
	Latching/Non-latching	2
	Set Units	2
	mA Levels	2

Symbol	Description	Security Level
	Calibration Interval	2
	Accept New Sensor Type	2
	Beam Block Options	2
	Path Length	2
	Unit ID	2
	Relay Options	2
	Fieldbus Options	2
	Configure Security	2



Warning: When configuring or communicating with the transmitter using the front panel displays, resume monitoring by exiting all menus and returning to the General Status menu manually. No time outs are invoked.



Note: With the exception of Inhbit Mode, gas measurement continues in the background allowing users to navigate screens without taking the transmitter offline.

Select Language

Available languages for the XNX transmitter are English, Italian, French, German, Spanish, Russian, Mandarin, and Portuguese.



Figure 64. Select Language Menu

Different screens are used to display each of the eight available languages, one language per screen. Each language screen will appear in three languages: the selected language, Russian, and Mandarin. To select a new display language, use the ◀ ▶ switches to navigage through the selections. Use ✓ to make the selection or ✗ to discard the selection and return to the previous menu.

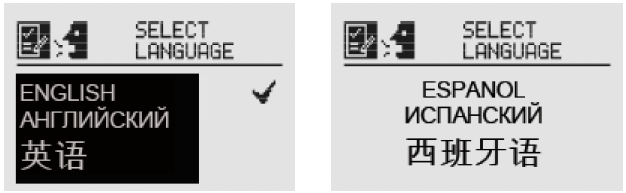

Figure 65. Language Selection Screen

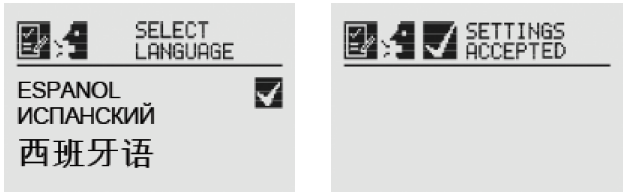

Figure 66. Accept Language Change Screen

Set Date & Time



Figure 67. Set Date & Time Menu

Select “Set Date and Time” to change the date format and set the current time/date into the XNX.

Set Date Format

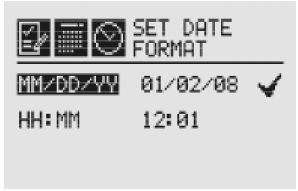

Figure 68. Set Date Format Menu

Use the ◀ ▷ switches to highlight “MM/DD/YY.” Select ✓ to set the date format.

Set Date

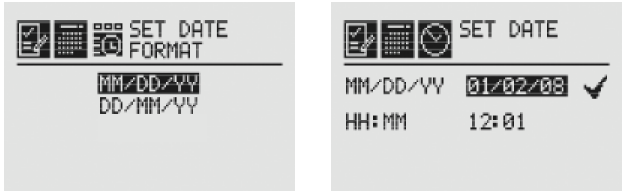

Figure 69. Set Date Format Screen / Set Date Menu

Use the Set Date selection to set the current date. Use the ◀ ▷ switches to select the year, month, and day. Select ✓ to set the desired date.

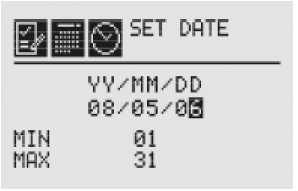

Figure 70. Setting the Date Screen

Use the ◀ ▷ switches to decrement or increment the values until the desired value appears. Select ✓ to set the value and move to the next character. Repeat for each character to be changed.

Set Time



Figure 71. Set Time Menu

Use the ◀ ▷ switches to decrement or increment the values until the desired value appears. Use ✓ to select the value and move to the next character. Repeat for each character to be changed.



Figure 72. Set Time Screen

Use the ◀ ▶ switches to navigate to the ✓. Select it to save the changes. If ✓ is not selected, no changes will be saved.

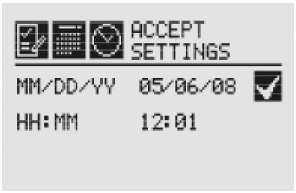

Figure 73. Accept Time-Date Changes

When the new settings have been saved, the “Settings Accepted” screen will be displayed.



Figure 74. Time-Date Settings Accepted

The remainder of this section requires **Level 2** security access.

Set mV Sensor Type

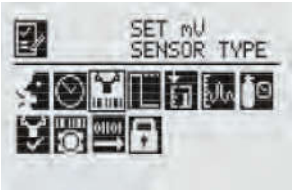

Figure 75. Set mV Sensor Type Screen

Set mV Sensor Type sets the identity of the type of mV sensor attached to the transmitter. The available mV sensor type selections are:

Sensor	Description
MPD-IC1 (5%V)	MPD Carbon Dioxide 5%Vol
MPD-IV1 (5%V)	MPD Methane 5%Vol
MPD-IV1 (100%L)	MPD Methane 100%LEL
MPD-IF1 (100%L)	MPD Flammable 100%LEL
MPD-CB1 (100%L)	MPD Flammable 100%LEL
705-HT (20%L)	705 Flammable 20%LEL (High-Temp)
705-HT (100%L)	705 Flammable 100%LEL (High-Temp)
705-STD (100%L)	705 Flammable 100%LEL
SP-HT (20%L)	Sensepoint Flammable 20%LEL (High-Temp)
SP-HT (100%L)	Sensepoint Flammable 100%LEL (High-Temp)
SP-STD (100%L)	Sensepoint Flammable 100%LEL
SP-PPM (10%L)	Sensepoint Flammable PPM (10%LEL equiv)
SP-PPM	Sensepoint Flammable PPM
SP-HT-NH3	Sensepoint Ammonia 30,000 PPM

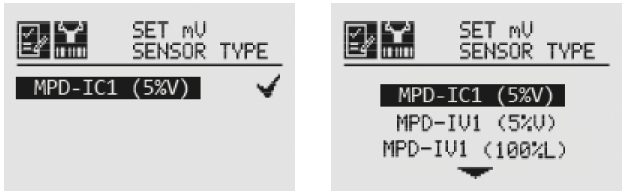

Figure 76. Current configured mV sensor and mV Available Sensor List

The first screen displays the currently configured sensor. Select ✓ to navigate to the Sensor Selection screen. To select a new mV sensor, use the ◁ ▷ switches to scroll through the list. Use ✓ to select a sensor or ✗ to discard the sensor selection, retaining the previously selected sensor, and return to the previous menu.

Set mA Sensor Type

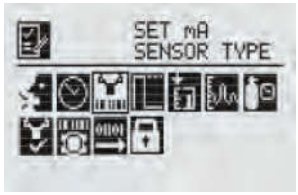

Figure 77. Set mA Sensor Type Screen

Set mA Sensor Type identifies the type of mA sensor attached to the transmitter. The available mA sensor choices are “Excel/ Optima” and “Other mA Sensor.”

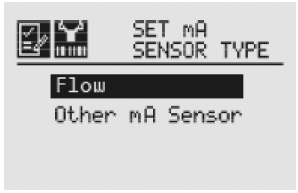

Figure 78. mA Available Sensor List

To select a new mA sensor, use the ◁ ▷ switches to move through the list. Use ✓ to make the selection or ✗ to discard the selection, retain the previously selected sensor, and return to the previous menu.

Note: This configuration option is not available for XNX transmitters with EC sensors.

Gas Selection

Gas Selection sets the target gas for sensors capable of detecting multiple gases. The available gases for each of the capable sensors is determined by the device connected to the XNX transmitter.



Figure 79. Gas Selection Menu

After selecting Gas Selection, the initial screen displays the current target gas. Select ✓ to display the list of available gases for the configured sensor. Use the ◁ ▷ switches to scroll through the list. A sample of the list is shown in Figure 81.

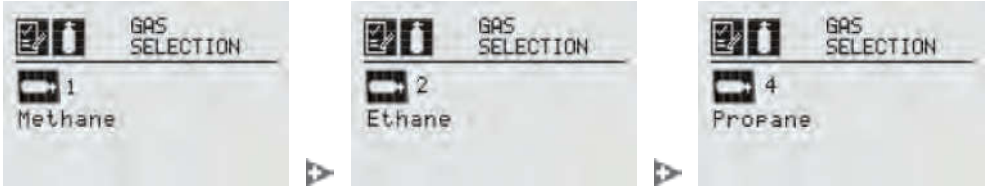

Figure 80. Available Target Gas List

Use ✓ to select the new gas or ✗ to discard the selection, retain the previously selected gas, and return to the previous menu.

When a new gas is selected, these screens are displayed:



Figure 81. Select New Target Gas

Note: The gas selections available will vary with different types of sensors. Gases listed with a "-2" suffix are compliant with 60079-20-1 LEL levels.

Warning: When selecting a new target gas for units with a Searchpoint Optima Plus, the sensor must be recalibrated.

These are the XNX transmitter's selectable gases:

- Butane (C_4H_{10})
- Carbon Dioxide (CO_2)
- Ethanol (C_2H_5OH)
- Ethylene (C_2H_4)
- Hexane (C_6H_{14})
- Hydrogen (H_2)
- Methane (CH_4)
- Methanol (CH_3OH)
- Propane (C_3H_8)
- Star 1 through Star 8[1]

Warning: Do not use the XNX Universal Transmitter in oxygen-enriched atmospheres. Concentrations displayed will be adversely affected by oxygen depletion.

[1]In nonane detection applications, if an MPD-CB1 sensor is employed, use star rating 2; with SP-HT sensors, use star rating 4.

Changing the Gas or Units Name

If "Other mA Sensor" has been selected as the sensor type, the existing gas and units can be renamed. From the Gas Selection menu, select ✓ to open the Gas Name menu. Select ✓ again to open the Gas Name editing display. The first letter of the current selection will be highlighted (Figure 82).



Figure 82. Gas Name Screen / Gas Name editing screen

Use the ◀ ▶ switches to cycle through the 76 options (26 capital letters, 26 lower case letters, 10 numbers, 13 typographic characters, and a space). When the first character of the new gas name has been reached, select ✓ to advance to the second character. Repeat this procedure with each character until the new gas name is displayed. In this example, "mA Sensor" has been changed to "Flow Sensor" (Figure 83). The name can be up to 15 characters long. Select ✓ to return to the Gas Name screen. The new name will be displayed in reverse (light characters on a dark background). Select the ▶ switch twice to display the Accept Settings screen. Select ✓ to accept the new gas name. A "Settings Accepted" screen will be displayed briefly, followed by the Gas Selection menu.

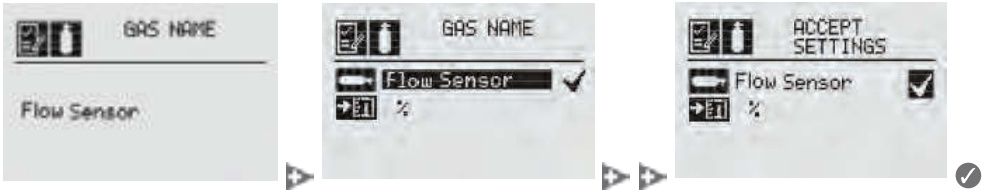

Figure 83. Accepting the New Gas Name

Follow the same procedure to rename the units ("%" in the illustrations). The units name can be up to 5 characters long.

Gas Selections and Alarm Limits Based on mV Sensor Type

The following tables show the tranmsitter's programmable alarm limits.

Note: -2 Gas Selection %LEL values are per IEC 60079-20-1:2010

	MPD-IC1 (5%V)
	Carbon Dioxide
Lower Alarm Limit (% Vol)	0.5
Upper Alarm Limit (% Vol)	5.0

	MPD-IV1 (5%V/V, 100%LEL)		
	Methane	Methane-1	Methane-2
Lower Alarm Limit	0.5% Vol	10% LEL	10% LEL
Upper Alarm Limit	5.0% Vol	60% LEL	60% LEL
% Volume Reference	n/a	5.0	4.4

	MPD-IF1 (100%LEL)	
	Propane-1	Propane-2
Lower Alarm Limit (% LEL)	10	10
Upper Alarm Limit (% LEL)	60	60
% Volume Reference	2.0	1.7

	MPD-CB1 (100% LEL)																				
	Hydrogen	Methane-1	Methane-2	Methanol	Ethelyne-1	Ethelyne-2	Ethanol-1	Ethanol-2	Propane-1	Propane-2	Butane-1	Butane-2	Hexane-1	Hexane-2	Star 1	Star 2	Star 3	Star 4	Star 5	Star 6	Star 7	Star 8
Lower Alarm Limit (% LEL)	10	10	10	10	10	10	10	10	10	10	10	10	10	10	20	20	20	10	10	10	10	10
Upper Alarm Limit (% LEL)	60	60	60	60	60	60	60	60	60	60	60	60	60	60	60	60	60	60	60	60	60	60
% Volume Reference	4.0	5.0	4.4	5.5	2.7	2.3	3.3	3.1	2.0	1.7	1.5	1.4	1.2	1.0	n/a	n/a	n/a	n/a	n/a	n/a	n/a	n/a

	705-STD (100% LEL)																				
	Hydrogen	Methane-1	Methane-2	Methanol	Ethelyne-1	Ethelyne-2	Ethanol-1	Ethanol-2	Propane-1	Propane-2	Butane-1	Butane-2	Hexane-1	Hexane-2	Star 1	Star 2	Star 3	Star 4	Star 5	Star 6	Star 7	Star 8
Lower Alarm Limit (% LEL)	20	20	20	25	25	30	30	30	25	30	30	30	50	50	50	30	25	20	20	20	15	15
Upper Alarm Limit (% LEL)	60	60	60	60	60	60	60	60	60	60	60	60	60	60	60	60	60	60	60	60	60	60
% Volume Reference	4.0	5.0	4.4	5.5	2.7	2.3	3.3	3.1	2.0	1.7	1.5	1.4	1.2	1.0	n/a	n/a	n/a	n/a	n/a	n/a	n/a	n/a

	705-HT (100% LEL)																				
	Hydrogen	Methane-1	Methane-2	Methanol	Ethelyne-1	Ethelyne-2	Ethanol-1	Ethanol-2	Propane-1	Propane-2	Butane-1	Butane-2	Hexane-1	Hexane-2	Star 1	Star 2	Star 3	Star 4	Star 5	Star 6	Star 7	Star 8
Lower Alarm Limit (% LEL)	20	15	20	20	20	20	20	20	20	20	20	20	20	20	50	30	25	20	20	20	15	15
Upper Alarm Limit (% LEL)	60	60	60	60	60	60	60	60	60	60	60	60	60	60	60	60	60	60	60	60	60	60
% Volume Reference	4.0	5.0	4.4	5.5	2.7	2.3	3.3	3.1	2.0	1.7	1.5	1.4	1.2	1.0	n/a	n/a	n/a	n/a	n/a	n/a	n/a	n/a

	705-HT (20% LEL), SP-HT (20% LEL)		
	Hydrogen	Methane-1	Methane-2
Lower Alarm Limit (% LEL)	5.0	5.0	5.0
Upper Alarm Limit (% LEL)	20	20	20
% Volume Reference	4.0	5.0	4.4

	SP-STD (100% LEL)																				
	Hydrogen	Methane-1	Methane-2	Methanol	Ethelyne-1	Ethelyne-2	Ethanol-1	Ethanol-2	Propane-1	Propane-2	Butane-1	Butane-2	Hexane-1	Hexane-2	Star 1	Star 2	Star 3	Star 4	Star 5	Star 6	Star 7	Star 8
Lower Alarm Limit (% LEL)	20	15	20	20	20	20	20	20	20	20	20	20	20	20	50	30	25	20	20	20	15	15
Upper Alarm Limit (% LEL)	60	60	60	60	60	60	60	60	60	60	60	60	60	60	60	60	60	60	60	60	60	60
% Volume Reference	4.0	5.0	4.4	5.5	2.7	2.3	3.3	3.1	2.0	1.7	1.5	1.4	1.2	1.0	n/a	n/a	n/a	n/a	n/a	n/a	n/a	n/a

	SP-HT (100% LEL)																				
	Hydrogen	Methane-1	Methane-2	Methanol	Ethelyne-1	Ethelyne-2	Ethanol-1	Ethanol-2	Propane-1	Propane-2	Butane-1	Butane-2	Hexane-1	Hexane-2	Star 1	Star 2	Star 3	Star 4	Star 5	Star 6	Star 7	Star 8
Lower Alarm Limit (% LEL)	10	10	10	10	10	10	10	10	10	10	10	10	10	10	20	20	20	10	10	10	10	10
Upper Alarm Limit (% LEL)	60	60	60	60	60	60	60	60	60	60	60	60	60	60	60	60	60	60	60	60	60	60
% Volume Reference	4.0	5.0	4.4	5.5	2.7	2.3	3.3	3.1	2.0	1.7	1.5	1.4	1.2	1.0	n/a	n/a	n/a	n/a	n/a	n/a	n/a	n/a

	SP-PPM (10% LEL)		
	Hydrogen	Methane-1	Methane-2
Lower Alarm Limit (% LEL)	2.0	2.0	2.0
Upper Alarm Limit (% LEL)	10	10	10
% Volume Reference	4.0	5.0	4.4

	SP-HT-NH3
	Ammonia
Lower Alarm Limit (% LEL)	3000 ppm
Upper Alarm Limit (% LEL)	30000 ppm
% Volume Reference	n/a

	SP-PPM	
	Hydrogen	Methane
Lower Alarm Limit (% LEL)	1000 ppm	1000 ppm
Upper Alarm Limit (% LEL)	5000 ppm	5000 ppm
% Volume Reference	n/a	n/a

Range & Alarms

Warning: XNX Universal Transmitters carrying UL/CSA approvals that are configured for devices measuring %LEL will not allow adjustments to the full scale value. The range is fixed at 100%.

The Range & Alarms option applies only to units with certifications otherF than UL/CSA.

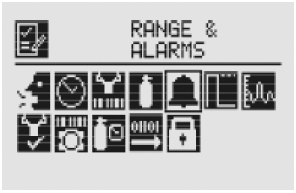

Figure 84. Range & Alarms Menu

Set Range (full-scale)

Range is sensor dependent. The Set Range option allows the full-scale range to be set for the sensor which is attached to the transmitter. The full-scale range is based on the capability of the sensor. The selectable range for EC sensors is defined in the Selectable Range column of the table in Section 6.3.2. The selectable range for catalytic bead sensors is defined in the Selectable Range column of the table in Section 6.3.5.

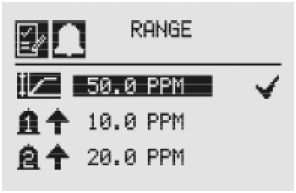

Figure 85. Range Option

When the Range option is highlighted, use the ◁ ▷ switches to decrement or increment the value. Use ✓ to accept the displayed value and move to the next field. When all fields have been updated, use the ▷ switch to highlight ✓ on the right side of the display. Use ✓ to accept the changes.



Figure 86. Setting the Range Value

When complete, the display will return to the Range Option screen.

Set Alarm Values

Set Alarm Values allows the values for Alarm Direction and Alarm Limits for both Alarm 1 and Alarm 2 to be set.

Caution: Alarm 1 and Alarm 2 values *must* be less than the Upper Limit value.

Use Alarm Direction to establish whether the alarm is to be triggered by rising or falling gas concentrations. Alarms for most target gases are triggered by rising concentration levels but certain gases; e.g., oxygen, can be measured for depletion levels. When the XNX transmitter is configured with mV or OPTIMA sensors and the meaurement units are LEL, the alarm level setting is limited to 60%LEL.

If the concentration of the target gas remains above the alarm values for 3 seconds or more, an alarm will be triggered.

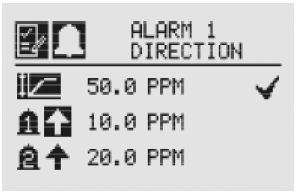

Figure 87. Alarm Direction

The icons next to the bell images indicate whether the alarm has been triggered by rising (↑) or falling (↓) gas concentrations. Use the ◁ ▷ switches to highlight the appropriate trigger. Use ✓ to make the selection or ✗ to discard it.



Figure 88. Setting Alarm Rising/Falling

The Alarm Limits selection sets the alarm trigger level for both alarms.

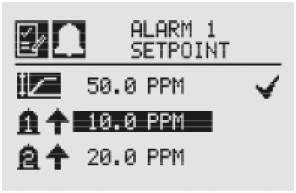

Figure 89. Alarm Limits

Use ◁ ▷ to set the desired alarm limit and ✓ select it. Repeat for each alarm.

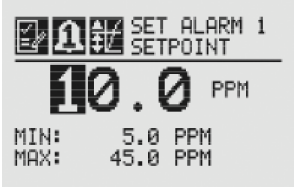

Figure 90. Setting an Alarm Setpoint

When complete, the display will return to the main Range & Alarm screen. When all settings have been made, use ◁ ▷ to move to the ✓ on the display to Accept Settings.

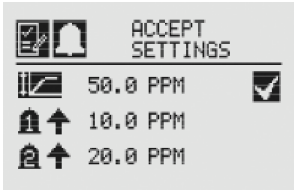

Figure 91. Accept Settings

When the settings have been saved, the following screen will appear on the display.



Figure 92. Settings Accepted Screen

See Section 6.1 Product Specifications for EC cell information.

Selecting the Numeric Format

If "Other mA Sensor" has been selected as the sensor type, the transmitter's output can be displayed in one of three numeric formats. From the Ranges & Alarms menu, select the ✓ switch to open the Range menu (Figure 93). Select the ✓ switch again to display the Range Lower Limit menu. Select the ▷ switch twice to open the first Numeric Format menu.



Figure 93. Navigating to the first Numeric Format menu

Select the ✓ switch to open the second Numeric Format menu, which displays the formats available for numerical display (see Figure 94).

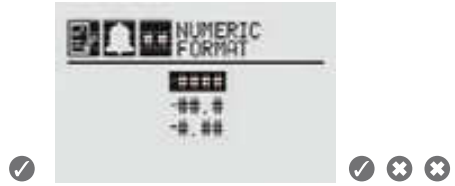

Figure 94. Navigating to the second Numeric Format menu

Select ◁ or ▷ to cycle through the three options. When the desired format is highlighted, select the ✓ switch to make the selection the default display format. Select ✗ twice to return to the Ranges & Alarms menu.

Latching / Non-Latching



Warning: There is a potential loss of sensitivity during exposure to high concentrations of H_2S. Under these conditions, set the control unit to latch at overrange. In standalone configuration, set alarms to latching. When resetting the overrange or alarm, verify correct operation of the transmitter.

Latching / Non-Latching is used to control whether Alarms 1 and 2 and faults will latch alarms.



Figure 95. Alarm Latching/Non-Latching Screen



Figure 96. Alarm Latching

Select the ⎍ or ⎍ icon beside the alarm limit to display the Alarm Latching/Unlatching screen. Alarm latching determines whether alarms that are triggered are automatically reset when the condition dissipates (latching off ⎍) or remain active until an operator resets them manually (latching on ⎍). Highlight the desired latching option with the ◁ ▷ switches. Use ✓ to accept it.



Figure 97. Setting Alarm Latching/Unlatching

Use the same procedure to set the desired values for Alarm 2 and Faults. When all settings have been made, use ◀ ▶ to navigate to the ✓ on the display. Use ✓ to accept settings.

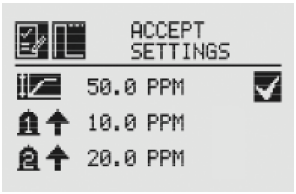

Figure 98. Accept Settings

When the settings have been saved, the following screen is displayed.



Figure 99. Settings Accepted Screen

Note: When non-latching is selected, external alarm latching is recommended.

Set Units

The Set Units menu allows the units of measurement displayed on the XNX main menu to be set. This option also sets the units transmitted via HART, Modbus, or Foundation Fieldbus sensors attached to the XNX transmitter, reporting concentrations in PPM or %VOL (except oxygen).

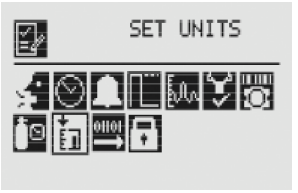

Figure 100. Set Units Menu

To change the units, use the ◀ ▶ switches to highlight the units icon. Use ✓ to select it. The transmitter's display will change to the Display Unit Selection screen which shows the available choices for the sensor type installed. Use the ◀ ▶ switches to highlight the desired unit of measurement. Use ✓ to select it or ✗ to discard the selection.

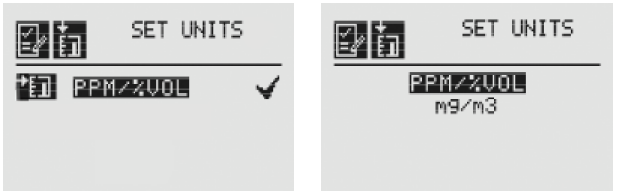

Figure 101. Display Unit Selection Screen

Caution: When changing units of measure, check alarm level settings for the proper units and change as necessary.

Once the units of measurement have been set, use the ◀ ▶ switches to navigate to the '✓' to accept the values.

mA Levels

This option allows the user to select mA output levels for inhibit, fault, and over range. Beam block and low signal apply to

Searchline (see the table in the next column).



Figure 102. mA Levels Menu

Using the ◀ ▶ switches, move to the mA output to be changed and use ✓ to select it.

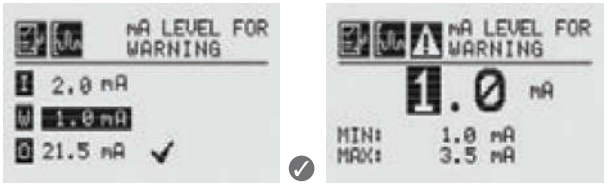

Figure 103. Set mA Levels for Warning

Use the ◀ ▶ switches to decrement or increment the value until the desired value appears. Use ✓ to select the value and move to the next setting. Repeat for each setting to be changed.

The default values and available output ranges for Inhibit, Warning, Overrange, Beam Blocked, and Low Signal are shown in the following table. See Section 5 Warnings/Faults for more information.

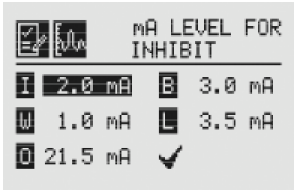

Signal		Output (mA)		
		Default	Min	Max
I	Inhibit	2.0	1.0	3.5
W	Warning	3.0	1.0	3.5
O	Overrange	21.0	20	22
B	Beam Blocked	1.0	1.0	4.0
L	Low Signal	1.0	1.0	4.0

Figure 104. Set mA Levels for Inhibit

After all changes have been made, use the ◀ ▶ switches to move to the '✓' and use ✓ on the front panel to accept and save the settings. If '✓' is not selected, none of the changes will be saved.



Figure 105. mA Settings Saved

Calibration Interval

Calibration Interval allows a desired interval for sensor calibration to be set for sensors attached to the transmitter. The transmitter will generate a warning when the interval is reached.



Figure 106. Calibration Interval Menu

Calibration Interval will not appear when an IR personality board is attached and the mA sensor type is set as 'Other mA Sensor'.

The default calibration values for the "Calibration Required" diagnostic vary based on sensor type. This value can be reprogrammed in accordance with site requirements to ensure the highest level of safety. Correct operation of each sensor should be confirmed using calibration with a certified gas of known concentration before commissioning.

Although the calibration Interval can be set to any value between 0 and 360 days, Honeywell Analytics recommends that the interval for electrochemical and catalytic sensors be set to 180

days (or fewer, in accordance with customer site procedures) to assure the highest level of safety.

Use the ◀ ▶ switches to highlight the current interval and use ✓ to select it.

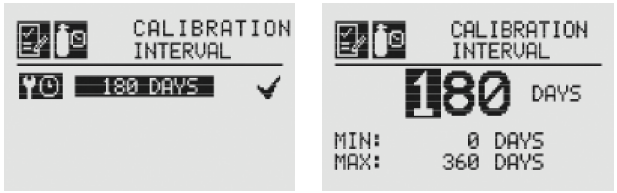

Figure 107. Edit Interval and Setting Interval Value Screens

Use the ◀ ▶ switches to move to the desired position. Use ✓ to select it. Use the ◀ ▶ switches to decrement or increment the value until the desired value is reached. (The minimum number of days is 0; the maximum number is defined by the sensor type.) Use ✓ to select the value and move to the next field. Repeat for each field. When all of the fields have been updated, use the ◀ ▶ switches to highlight the '✓' on the right side of the display. Use ✓ on the front panel to save the settings.



Caution: Setting the Calibration Interval to zero turns off the calibration notification. This can seriously affect sensor performance.

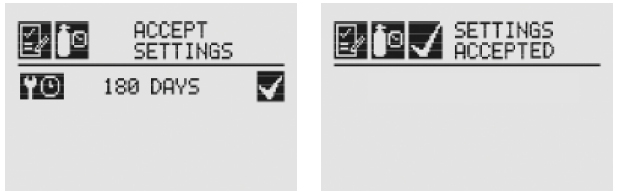

Figure 108. Saving New Interval and New Interval Accepted Screens

Accept New Sensor Type

When replacing EC cells or mV sensors, use Accept New Sensor Type to load default parameters into the XNX transmitter for calibration and sensor life. Accept New Sensor Type is also used when replacing an EC cell with another EC cell for a different target gas. (See Section 4.2.2).

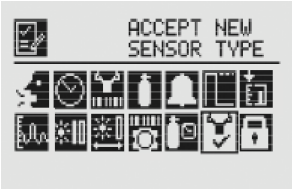

Figure 109. Accept New Sensor Type Menu

When changing the target gas by inserting a new sensor, the transmitter will prompt the user for a confirmation of the change before adjusting to the properties of the new sensor.

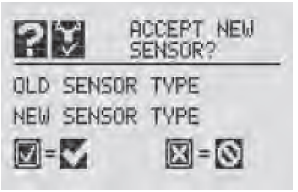

Figure 110. Select New Sensor

In the display of the XNX transmitter, the old sensor type and the new sensor type will be displayed. Use ✓ to accept the new sensor or ✗ to reject it.

Beam Block Options

The Beam Block Options menu is available only if the XNX transmitter is connected to a Searchline Excel sensor.

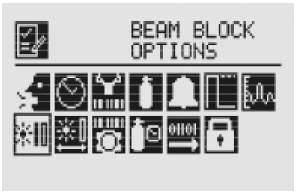

Figure 111. Beam Block Menu

If the infrared beam from the Excel transmitter is blocked or inhibited in such a way that the intensity of the beam drops to a level below the readable threshold set by the receiver, a warning will be generated by the XNX transmitter. The Beam Block Options menu allows the user to define the maximum period of time the infrared beam can be blocked and the percentage of signal loss before generating a warning through the transmitter.

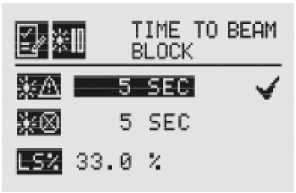

Figure 112. Beam Block Warning Time

Use the ◀ ▶ switches to move to the desired beam block time option and use ✓ to select it. Use the ◀ ▶ switches to decrement or increment the value until the desired value appears. Use ✓ to select the value and move to the next setting.

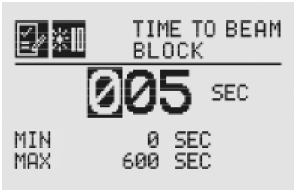

Figure 113. Setting Beam Block Warning Time

When the beam is blocked longer than the value set in Time to Beam Block, a fault is generated by the transmitter.

Set Time to Fault sets the minimum time the beam is blocked before generating a fault.

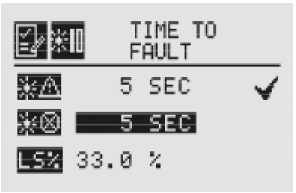

Figure 114. Beam Block Fault Time

Use the ◀ ▶ switches to move to the desired beam block time option and use ✓ to select it. Use the ◀ ▶ switches to decrement or increment the value until the desired value appears. Use ✓ to select the value and move to the next setting.

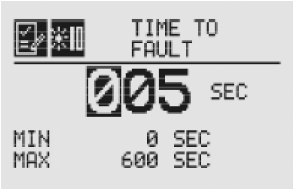

Figure 115. Setting Beam Block Fault Time

When the beam is blocked longer than the value set in Time to Fault, a fault is generated by the transmitter.

Low Signal Percentage sets the minimum percentage value of the beam that is not blocked. When the percentage decreases below the defined percentage, a fault is generated.

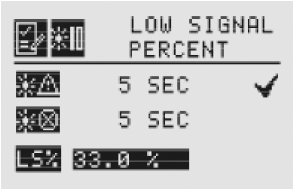

Figure 116. Low Signal Percentage

Use the ◀ ▶ switches to move to the desired Low Signal Percentage and use ✓ to select it. Use the ◀ ▶ switches

to decrement or increment the value until the desired value appears. Use ✓ to select the value and move to the next setting.

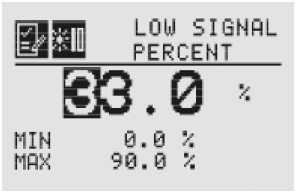

Figure 117. Setting the Low Signal Percentage

Once the values for Beam Block Warning, Beam Block Fault and Low Signal Percentage have been set, use the ▷ switch to highlight the '✓' on the right side of the display. Then use ✓ to accept the changes to the XNX. If '✓' is not highlighted, none of the changes will be saved.

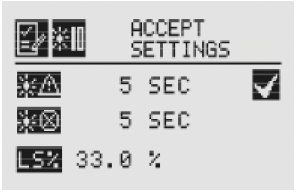

Figure 118. Accept Beam Block Changes

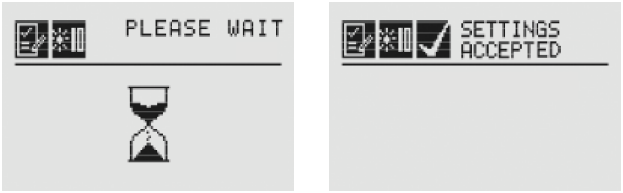

Figure 119. Beam Block Changes Accepted

Path Length

The distance (in meters) between the transmitter and the receiver is set through the Path Length menu. This menu is available only if the transmitter is connected to a Searchline Excel sensor.



Figure 120. Path Length Menu

Setting the Path Length or distance between the transmitter and receiver of the Excel lets the devices determine the optimum settings for the beam strength for the application.

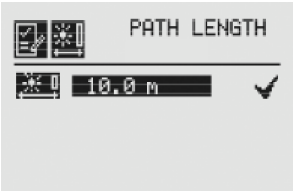

Figure 121. Current Path Length Setting

Use the ◁ ▷ switches to move to the desired Path Length setting and use ✓ to select it. Use the ◁ ▷ switches to decrement or increment the value until the desired value appears. Use ✓ to select the value and move to the next setting.

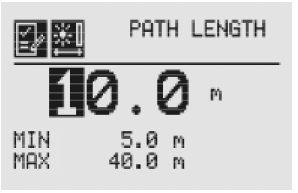

Figure 122. Setting Path Length

Once the values for Path Length have been set, use the ▷ switch to highlight the '✓' on the right side of the display. Use the ✓ to accept the changes.

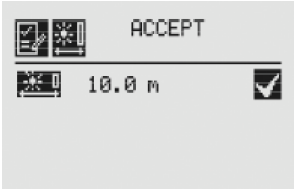

Figure 123. Accepting Path Length Changes



Figure 124. Path Length Changes Accepted

Unit ID

The Unit ID option allows a unique unit ID of up to 18 characters to be set for each XNX transmitter. This character string can be broadcast over any of the supported communication options, providing a means to create a unique identification for each XNX transmitter for accurate reporting. Available characters are A-Z, a-z, 0-9 and special characters ? ! * % ( ) : & / , # + -



Figure 125. Unit ID Menu

Note: The XNX Unit ID is not the same as the HART tag in XNX applications using HART protocol.

Edit ID

Each XNX is assigned a default Unit ID from the factory. The Edit ID menu allows the assigned ID to be modified.

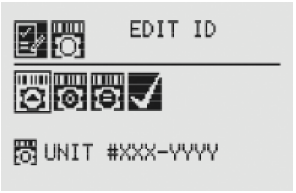

Figure 126. Edit Unit ID Screen

From the Edit ID Screen, use the ◀ ▶ switches and ✓ to select Edit ID. The current Unit ID is displayed. When editing an existing ID, the list of available characters begins at the value displayed.

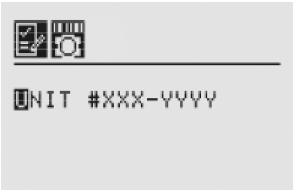

Figure 127. Editing the Unit ID

Use the ✓ switch to highlight the first character to be changed. Use the ◀ ▶ switches to decrement or increment the value until the desired value appears. Use ✓ to accept the new value and move to the next character. Repeat for each character to be changed. The Unit ID can be up to18 characters long.

Clear ID

This option clears the current set Unit ID.

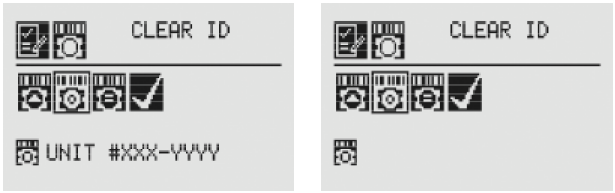

Figure 128. Clear Unit ID and Cleared Unit ID Screens

Set ID to Default

The Set ID to Default option returns the Unit ID to the factory default.

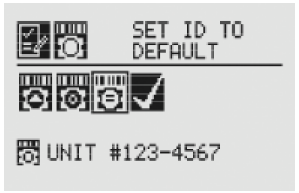

Figure 129. Set ID to Default Screen

Once all changes have been made, Accept Settings must be selected before exiting the Unit ID menu. When all changes are saved, the transmitter will display the Settings Accepted screen.



Figure 130. Accept Settings and Accepted Screens

Relay Options

The Relay Options menu allows the relays for both alarm levels to be configured. This menu is available only if the XNX transmitter is equipped with the optional relays.

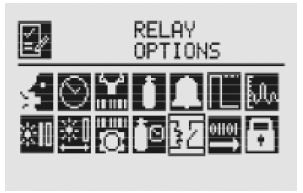

Figure 131. Relay Options Screen

XNX relays can be set to Energized or De-energized. The default is De-energized. The two states for each relay are represented by the symbols for energized and for de-energized.

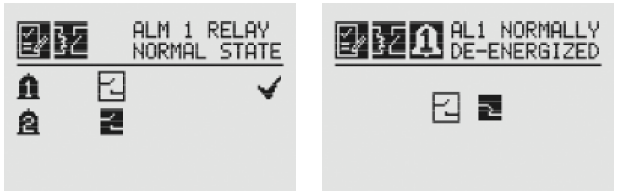

Figure 132. Alarm 1 Relay Current State and Setting New State

Use the switches to move to the desired alarm and use to select it. Use the switches to change the state of the relay. Use to accept the new state. Once the XNX transmitter has accepted the new information, a Settings Accepted screen appears.

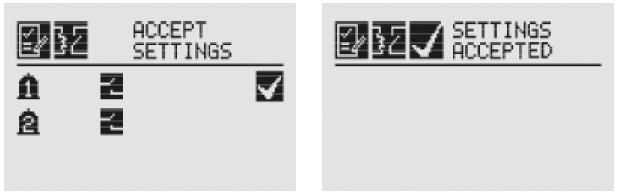

Figure 133. Accept New Alarm Relay Settings and new Settings Accepted

Fieldbus Options

The Fieldbus Options menu allows configuration of the HART address or the optional Modbus fieldbus address and baud rate.

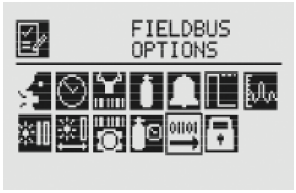

Figure 134. Fieldbus Options Screen

Select the Fieldbus Options icon to activate the HART/Modbus screens to allow selection of the protocols to be configured or changed. If the XNX is configured without HART or Modbus, only the installed options will be visible.

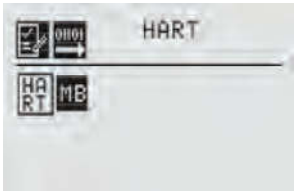

Figure 135. HART Options Screen

The HART menu provides the ability to select the HART mode. From the HART screen, use the ◁ ▷ switches to highlight the HART option, then select ✓. This displays the HART address screen where the device address and whether the HART protocol is active in the unit can be set. To set the address, use the ◁ ▷ switches to highlight the number in the top line (between 0 and 63) and use ✓ to select it. Use the ◁ ▷ switches to decrement or increment the value until the desired value appears. Use ✓ to select the value and move to the next setting.



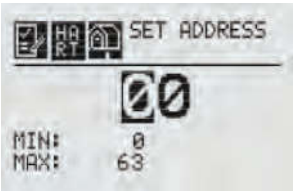

Figure 136. HART Address and Address Value Screens

Use the ◁ ▷ switches to move to the HART option and use ✓ to select it. Use the ◁ ▷ switches to scroll through the options until the desired option is highlighted. Use ✓ to accept the new state. See Section 2.3.1 and Appendix A for more information on available HART modes.

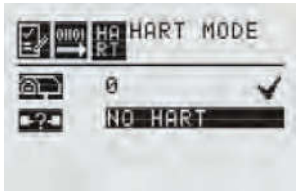



Figure 137. HART Mode Screens

Once the values for the HART address and Mode have been set, use the ◁ ▷ switches to navigate to the '✓' then select it to save the changes to the XNX.





Figure 138. HART Settings Accepted

When the Modbus option is available, use the ◁ ▷ switches to move to the Modbus icon and use ✓ to select it. The Modbus option allows the address and communication baud rate to be set.

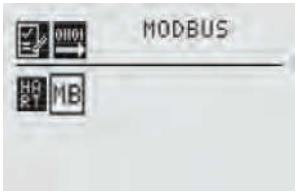

Figure 139. Modbus Options Screen

From the Set Fieldbus Address screen, select ✓. To set the Fieldbus address, use the ◀ ▶ switches to move to the desired position and use ✓ to select it. Use the ◀ ▶ switches to decrement or increment the value until the desired value appears. Use ✓ to select the value and moves to the next setting.



Figure 140. Set Fieldbus Address and Address Value Screens

The communications baud rate can be set from this screen. Use the ◀ ▶ switches to highlight the proper baud rate and select ✓.



Figure 141. Set Baud Rate Screens

Once the values for the Fieldbus address have been set, use the ◀ ▶ switches to navigate to the '✓' then select it to save the changes.





Figure 142. Accept Settings and Fieldbus Address Settings Accepted

Configure Security

Configure Security is used to set or reset the level 1 and level 2 passcodes that control access to the configuration menus of the XNX transmitter.

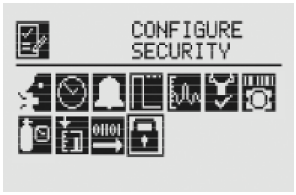

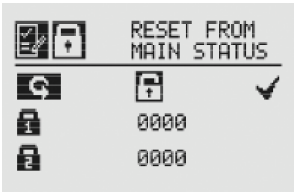

Figure 143. Configure Security Screens

Easy Reset from Main Status

The Easy Reset from Main Status option controls the ability to reset faults, warnings, and alarms from the General Status screen (see Section 1.4.2).

Use the ◀ ▶ switches and ✓ to select the lock icon. The Lock/Unlock screen will be displayed. Choose 'Lock' to prevent reset without password access. The 'Unlock' choice allows resets without requiring login or a passcode.



Figure 144. Lock/Unlock Screen

Level 1 and Level 2 Passcode

Level 1 and 2 passcode screens give the administrator the ability to assign new passcodes for either or both access levels.

From the Configure Security Screen, use the ◀ ▶ switches to highlight Passcode 1. Use ✓ to choose the first digit and the ◀ ▶ switches to decrement or increment the values. Use ✓ to accept the new value and move to the next digit. Repeat until all four digits have been selected. Follow the same procedure to change the Level 2 passcode.

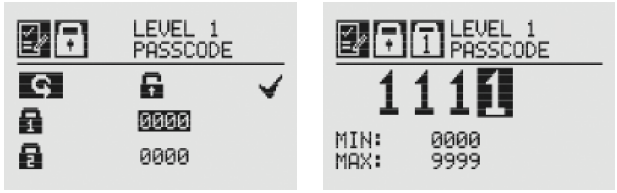

Figure 145. Setting Level 1 Passcode

Use the ◀ ▶ switches to move to “Accept Settings” on the display. Choose ✓ to save the settings to the transmitter.



Figure 146. Accept Settings and Security Settings Accepted Screens

2.6 Verifying the XNX Configuration

2.6.1 Test Menu

The test menu icons are shown in this table:

Symbol	Description	Symbol	Description
	Inhibit		Force Relay
	Force mA Output		Alarm/Fault Simulation



Warning: Keep the passwords in a secure area to prevent unauthorized access to the transmitter. If the passwords are lost, resetting the XNX transmitter will require a service technician.

Inhibit



Warning: When the XNX transmitter is placed in Inhibit Mode, alarms are silenced. This will prevent an actual gas event from being reported. Inhibit Mode must be limited to testing and maintenance only. Exit Inhibit Mode after testing or maintenance activities.



Figure 147. Inhibit Screen

The Inhibit mode is designed to prevent alarms from being triggered during testing or maintenance.



Figure 148. Inhibit Menu

Use the ◀ ▶ switches to inhibit alarms by selecting Inhibit On with the ✓. The confirmation screen appears.



Figure 149. Confirm Inhibit On

Select ✓ to place the transmitter alarms into inhibit mode. Select ✗ will cancel the choice and leave the alarms in normal operating mode.



Figure 150. Confirm Inhibit Off

To return from Inhibit mode to to the normal monitoring mode, select Inhibit Off with the ✓. A confirmation screen appears.

Select ✓ to remove the XNX from Inhibit mode. Select 'X" to cancel the choice and leave the alarms in Inhibit mode.

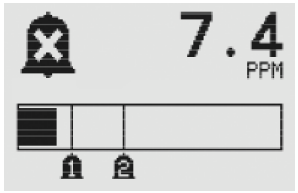

Figure 151. Inhibit Status Screen

When the XNX transmitter is in Inhibit mode, the General Status display will display the inhibit icon.

Force mA Output

Caution: The mA output set in this menu will revert to the normal operating values when exiting the Test Menu. For more information on setting the mA output levels for normal operation, see mA Levels.

Force mA Output allows peripheral devices driven by mA output from the XNX transmitter to be tested. Based on the mA output values set in the mA Levels option (see mA Levels), the operator chooses the mA level to output to the device.

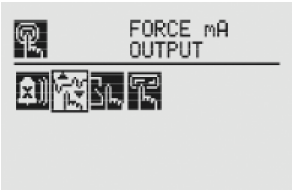

Figure 152. Force mA Output Screen

The New mA Output screen shows the current mA output in the left column. The output can be controlled by changing the value in the column on the right.

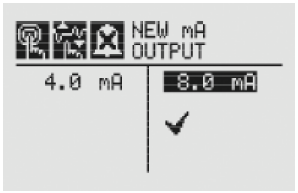

Figure 153. New mA Output Screen

Once the new value is input, use the ◀ ▶ switches to move to the '✓' and use the ✓ magnetic switch on the front panel to set the mA output.

Force Relays



Caution: Any relay conditions set in this menu will revert to the normal operating values when exiting the Test Menu. For more information on setting the relay options for normal operation, see Relay Options.

The Force Relay menu allows peripheral devices driven by relays from the transmitter to be tested. Depending on the relay options set in the Relay Options menu (see Relay Options), the relay will be open or closed.

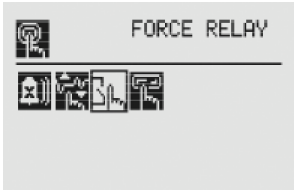

Figure 154. Force Relays Screen

The Relay State screen shows the current relay configuration in the left column. The output can be controlled by changing the value in the column on the right.

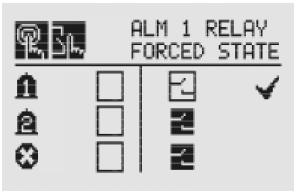

Figure 155. Relay State Screen

Once the new value is input, use the ◀ ▶ switches to move to the '✓' and use the ✓ magnetic switch on the front panel to change the condition of the relay.

Alarm/Fault Simulation

Alarm and Fault simulation work in tandem with the previous sections (Force mA Output and Force Relays) to allow thorough testing of the XNX transmitter and the peripheral warning and safety devices attached. Figure 156 shows the menu choices for selecting an alarm or fault simulation.



Figure 156. Alarm/Fault Simulation Screen

Selecting an alarm level to simulate activates a confirmation screen.

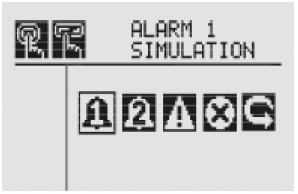

Figure 157. Alarm/Fault Simulation Menu



Figure 158. Confirmation

Selecting ✓ will simulate the alarm from the transmitter. If the ✗ is selected, the simulation will be aborted.

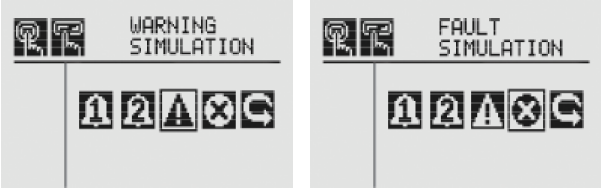

Figure 159. Warning and Fault Simulation Screens

To simulate a Warning or Fault from the transmitter, select the appropriate icon from the menu.



Figure 160. Fault Simulation Confirmation

A confirmation screen will appear. Select ✓ to simulate the warning or fault from the transmitter. If the ✗ is selected, the simulation will be aborted. Use Alarm/Fault Reset to reset alarms, faults, or warnings generated by the simulation.

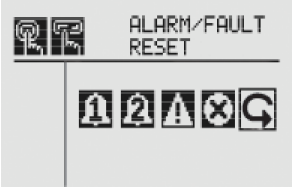

Figure 161. Alarm/Fault Reset Screen

A confirmation screen will appear.



Figure 162. Alarm/Fault Reset Screen

Select ✓ to reset the alarms, faults, or warnings generated by the simulation. If the ✗ is selected, the simulation continues.



Caution: Relays and LEDs will return to their initial states after simulations are completed unless faults and alarms are set to latching by the user.



Warning: After changing parameters with a handheld device, verify that the parameter settings are correct at the transmitter.

2.6.2 Information Menu

The Information Menu Displays the current status information for these parmeters:

Symbol	Description
	Show Alarm/Fault Status
	Show Date/Time
	Show Transmitter Data
	Show Transmitter Status
	Show Sensor Data
	Show Sensor Status

Symbol	Description
	Show Gas Data
	Show Range/Alarm Settings
	Show mA Level Settings
	Show Relay Settings
01101	Show Fieldbus Settings
	Show Event History

Alarm/Fault Status

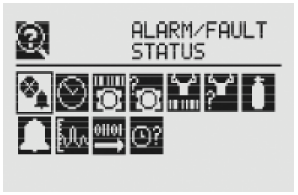

Figure 163. Alarm/Fault Status Screen

Select Alarm/Fault Status to display the Alarm/Fault Status screen allowing faults and alarms to be reset.

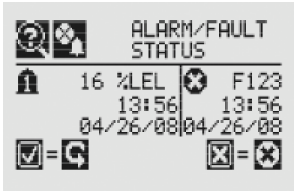

Figure 164. Alarm/Fault Status Screen

The '✓' will be highlighted. Select ✓ to reset all faults and alarms generated by the transmitter then return to the Alarm/Fault Status screen. Select the ✕ switch to return to the Alarm/Fault Status screen without resetting faults or alarms.

Date & Time

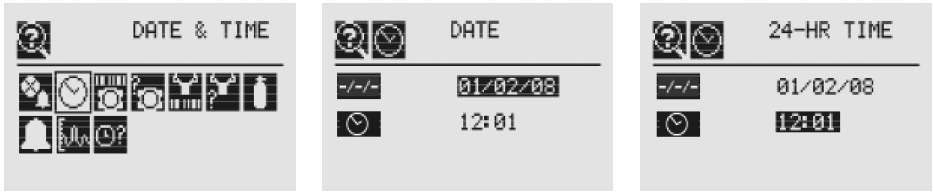

Figure 165. Date/Time Screens

The Date and Time screens display the date and time in the formats currently set on the transmitter. To set the time and date see Set Date & Time.

Transmitter Data

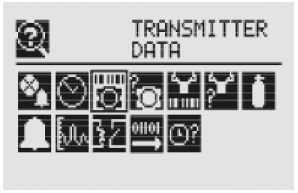

Figure 166. Transmitter Data Screen

Using the ◀ ▶ switches, the Transmitter Data displays the ID, part number, serial number, and version number of the firmware.



Figure 167. Transmitter ID, Part Number and Serial Number Screens

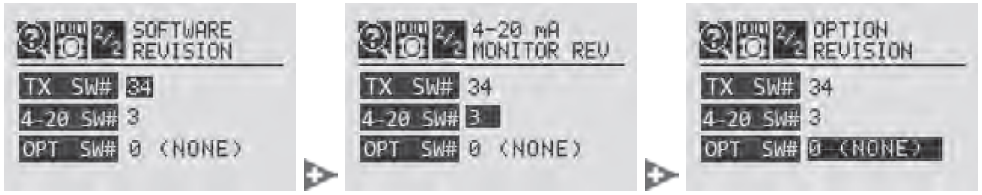

Figure 168. Transmitter Software, 4-20 Monitor and Option Version

Transmitter Data is also used to update the configuration of the XNX when an option board is added or changed. To add the new option, use the ◀ ▶ switches to navigate to the Option Revision screen, then swipe the ✓ magnetic switch on the front panel to display the Accept New Option Screen. The screen will show the current option (if any) and the newly installed option. Use the ◀ ▶ switches to highlight the option then swipe the ✓ magnetic switch on the front panel to accept the change. The transmitter will update the part number of the unit. The new option will then be operational.

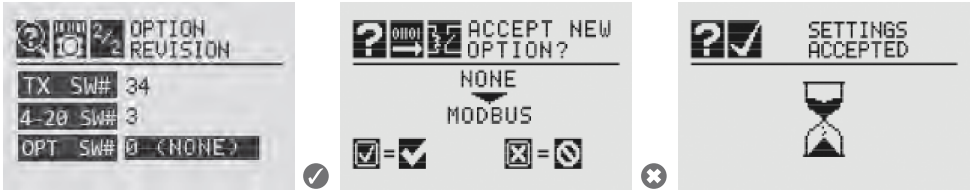

Figure 169. Updating The XNX for Option Boards Added or Changed

Transmitter Status

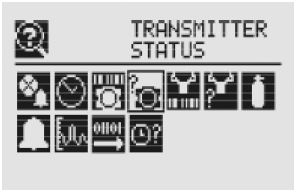

Figure 170. Transmitter Status Screen

Transmitter Status displays information about the XNX unit including temperature, 4-20 mA output value, and supply voltage.

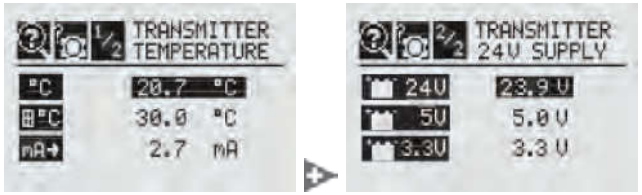

Figure 171. Transmitter Temperature and Supply Voltage Screens

Sensor Data

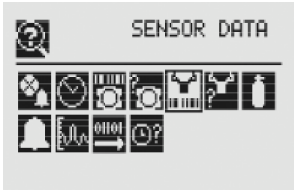

Figure 172. Sensor Data Screen

Sensor Data displays information about the transmitter including sensor type and sensor software revision.

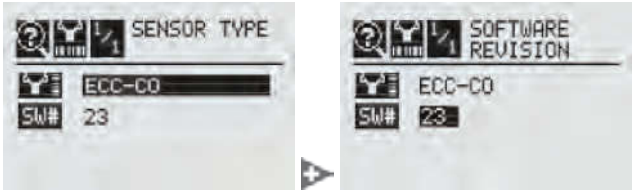

Figure 173. Sensor Type and Software Screens

Sensor Status

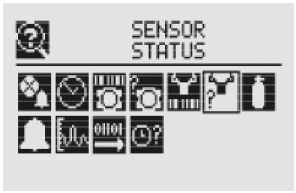

Figure 174. Sensor Status Screen

Sensor Status displays the temperature of the sensor attached to the transmitter. When equipped with an EC or mV sensor, sensor life is also displayed.

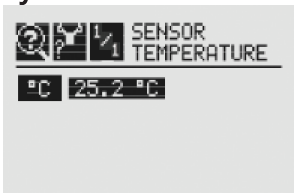

Figure 175. Sensor Temperature Screen

Gas Data

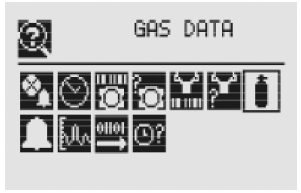

Figure 176. Gas Settings Screen

Gas Data displays the current detectable gas as configured for the attached sensor.

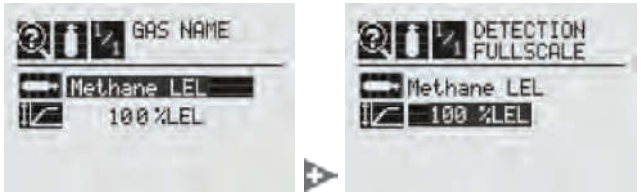

Figure 177. Gas Abbreviation and Full Scale Screens

Range/Alarm Settings

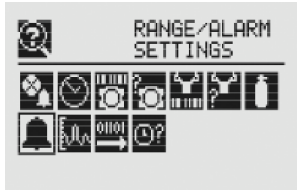

Figure 178. Range/Alarm Settings Screen

Range/Alarm Settings displays the currently configured alarm information.

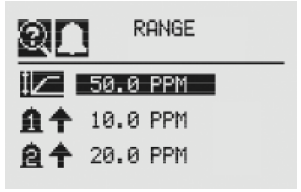

Figure 179. Alarm Display Range Screen

mA Level Settings

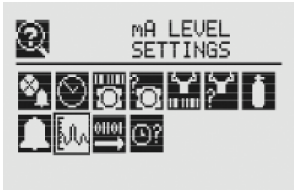

Figure 180. mA Level Settings Screen

mA Level Settings shows the current values for mA output for Inhibit, Warning, and Overrange output.

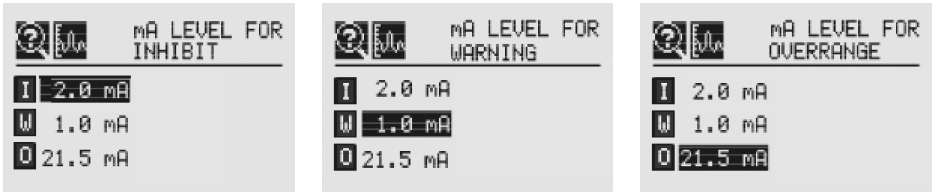

Figure 181. mA Output Inhibit, Warning and Overrange Screens.

Fieldbus Settings

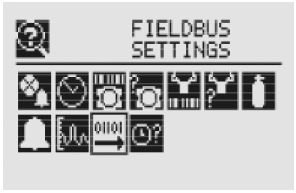

Figure 182. Fieldbus Settings

Fieldbus Settings displays the current configuration of both HART and Modbus. To change the settings see Fieldbus Options. HART displays the current HART address assigned to the transmitter.



Figure 183. HART Configuration Settings

Modbus displays the current address and communication data rate assigned to the transmitter.

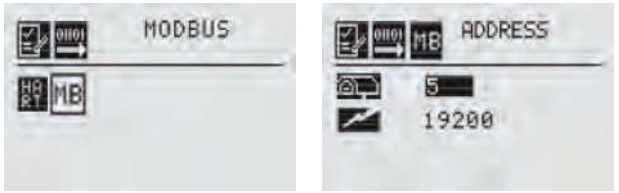

Figure 184. Modbus Configuration Display Screen

Relay Data

The Relay Menu is enabled only if the XNX transmitter is equipped with the optional relays.

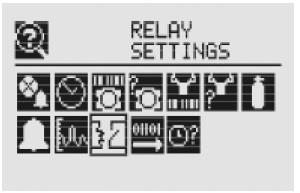

Figure 185. Relay Data Screen

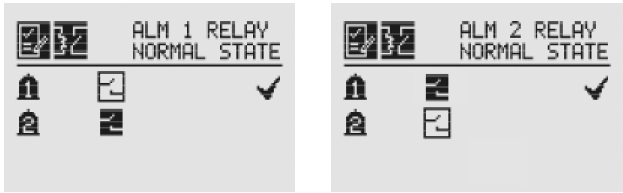

Figure 186. Relay State Screens

Relay Data displays the current setting of the optional relays on the transmitter. To change the relay settings, see Relay Options.

Event History

The Event History screen lists all events that are activated by the transmitter's settings. Five types of events are recorded: reset messages, alarm messages, warning messages, fault messages, and informational messages. The events are listed in chronological order beginning with the latest.

Events can be displayed through five browsing modes:

- all events in order of occurrence
- all events by hour
- all events by day
- only the alarm events, in order of occurrence
- only the fault events, in order of occurrence

The Event History screen groups events into chronological order (beginning from the unit's installation). Events can also be viewed by hour or by date.

Events listed in *hour* order are grouped without regard to date. For example, all events that have occurred between noon and 1:00 o'clock since the transmitter's installation can be isolated. To view all events in hour order:

1. Use the magnetic wand to filter the display by hour.
2. Navigate through the displayed times.

To isolate all of the events from a specific *day*:

1. Use the magnetic wand to filter the display by day.
2. Navigate through the displayed days.
3. Filter the list by all events. This will display all events that occurred on that day.

When the transmitter is configured with the Searchline Excel or Searchpoint Optima, the data reported in the event will be the fault code from the Searchline Excel or Searchpoint Optima.

The transmitter records up to 1280 events in a circular buffer. When event 1281 is recorded, the oldest event will be bumped from the list.

Note: The leading zeros of faults and warnings are not displayed in the event list; i.e., Fault 011 will be displayed as Fault 11.

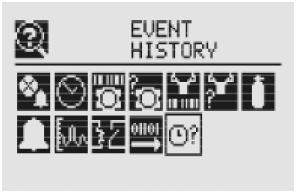

Figure 187. Event History Screen

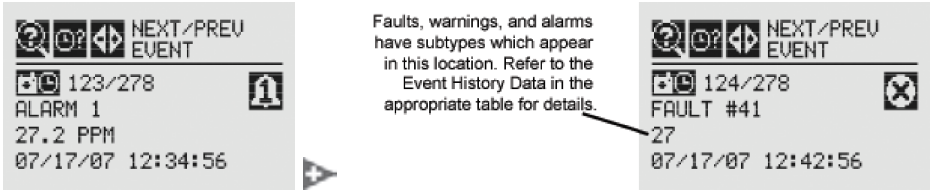

Figure 188. Chronological Event List

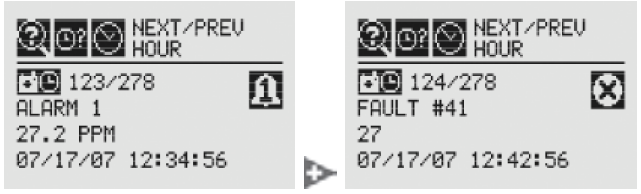

Figure 189. Chronological Event List by Hour

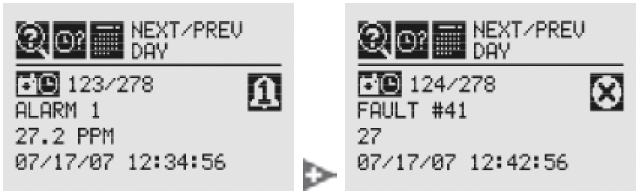

Figure 190. Chronological Event List by Day

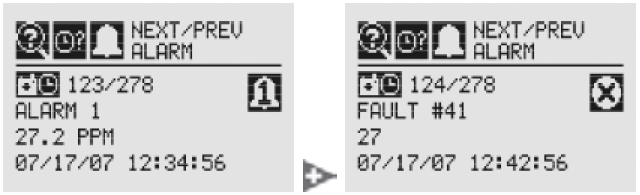

Figure 191. Chronological Alarm List

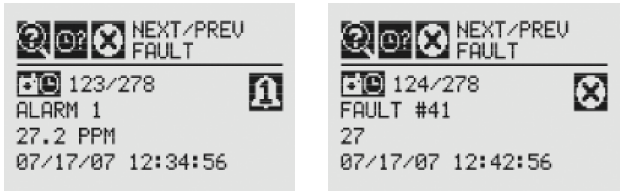

Figure 192. Chronological Fault List

The transmitter is configured with five cable/conduit ports built into the housing for wiring and mounting sensors.

3 Calibration

3.1 Gas Calibration Menu

Each of the sensor technologies supported by the XNX® Universal Transmitter uses unique calibration procedures. The description provided illustrates the XNX interface with the sensor. The description does not replace the procedures found in each sensor's operating manual.

The Gas Calibration menu is used for Zero and Span calibration as well as functional gas testing (bump test). The Gas Calibration menu is accessed from the Main Menu.

This table shows the Gas Calibration menu icons:

Symbol	Description
	Gas Calibration
	Bump Test
	Calibrate mA Output
	Soft Reset
	Align Excel



Figure 193. Gas Calibration Menu

3.2 Calibration

Warning: Do not use the XNX Universal Transmitter in oxygen-enriched atmospheres. Concentrations displayed will be adversely affected by oxygen depletion.

Caution: The calibration procedure should be performed only by qualified personnel. Take appropriate precautions with cylinders of flammable and toxic gases.

The default calibration values for the "Calibration Required" diagnostic vary based on sensor type. This value can be reprogrammed in accordance with site requirements to ensure the highest level of safety. Correct operation of each sensor should be confirmed before each use by calibration with a certified test gas of known concentration before commissioning. See Section 6 - Specifications for calibration gas specifications.

Caution: Recalibrate if the temperature of local environment has varied by more than ±15°C from the temperature of calibration.

Warning: Honeywell recommends periodic bump tests (every 30 days or in accordance with customer site procedures) to the sensor to insure proper operation and compliance with the functional safety rating of the installation.

3.2.1 Zero and Span Calibration for XNX EC Sensors, mV Sensors, and Searchpoint Optima

Caution: Before initial calibration, allow the sensor to stabilize for 30 minutes after applying power. When in Zero and Span Calibration modes, the current output from the sensor is inhibited (default 2mA) to avoid false alarms.

Caution: For most sticky gases (e.g., HCl, Cl_2) use PTFE tubing with short pieces of rubber tube for the final connection (due to the inflexibility of PTFE). This minimizes adhesion of the gas to the tube surface and allows more accurate measurement.

To calibrate the sensor, use an appropriate span gas cylinder, tubing, magnet, and calibration gas flow housing. Set the flow regulator to 300-375 ml/min for XNX EC sensors or 500 ±200 ml/min for XNX mV sensors. A compressed gas cylinder (20.9%Vol oxygen) should be used to perform the zero calibration if the area where the sensor is located contains any residual amount of the target gas. If no residual gas is present, background air can be used to perform the zero calibration. Contact a Honeywell Analytics representative for details about suitable calibration kits. To calibrate the sensor, follow the procedure in Section 3.2.2.

Note: The oxygen sensor does not require a zeroing procedure. Background air (20.9%Vol oxygen) can be used to span the oxygen sensor in place of a compressed air cylinder (20.9%Vol oxygen). See Section 6.3.2 for other sensors.

Note: EN performance standards require 10 minutes stabilization time for application of zero and span gas for performance-approved EC, mV, and IR sensors prior to calibration.

3.2.2 Calibration Procedure

This section outlines the steps for calibrating the transmitter's attached sensors.

Note: The Zero Calibration procedure should be performed prior to the Span Calibration procedure.

1. If using a compressed gas cylinder, push the calibration gas flow housing onto the bottom of the sensor and apply the gas.
2. Access the Gas Calibration Menu.



Figure 194. Gas Calibration Menu

Note: The Gas Calibration menu is for both Zero Calibration and Span Calibration.

Zero Calibration

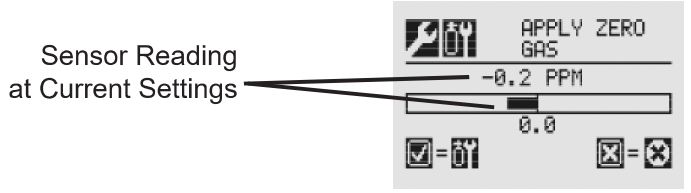

Figure 195. Zero Calibration Screen

As the sensor detects the gas and the concentration increases, the values displayed will reflect the changing concentration. When the concentration values are stable, 3 minutes, select ✓ to allow the transmitter to calculate the zero adjustment. Selecting ✗ will return to the Gas Calibration menu.



Figure 196. Zero Calibration in Progress

3. If the zero calibration is successful, the transmitter will display the Zero Passed screen.

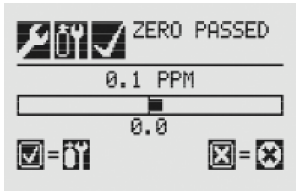

Figure 197. Zero Calibration Passed

Span Calibration

If a Span Calibration is not required, select the ✗ to skip the Span Calibration and return to the Calibration menu.

4. When the Zero Calibration is complete, the Span Concentration screen appears. The gas concentration for the Span Gas Calibration can be changed. If the Span Calibration is skipped, the Gas Calibration screen displays.

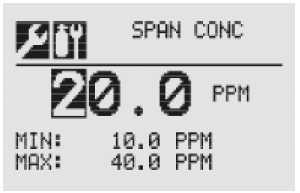

Figure 198. Span Gas Concentration Screen

5. Enter the concentration of the span gas by selecting ✓ to choose the first digit. Use the ◀ ▶ switches to increment or decrement the values. Use ✓ to accept the new value and move to the next digit. Continue until all digits have been selected.

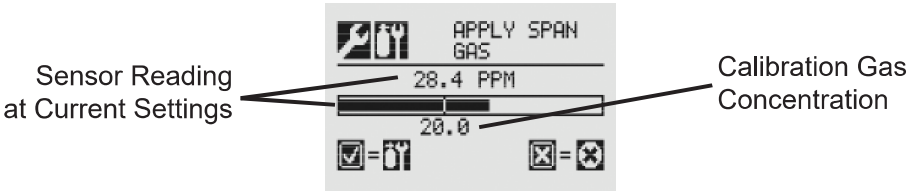

Figure 199. Span Calibration Screen

6. Apply the span gas. As the sensor detects the gas and the concentration increases, the values displayed will reflect the changing concentration. When the concentration values are stable, select ✓ to perform the span. The Span Calibration process also determines whether the sensor is within the proper range to accurately detect the target gas.

   Selecting ✗ will cancel the span calibration and return to the Gas Calibration menu.

7. When the sensor has completed the calibration and the span algorithms have determined that it is within range, the Span Passed screen will appear.

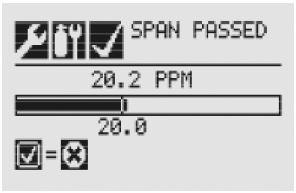

Figure 200. Span Passed Screen

If the calibration is not successful, the Span Failed screen will display. Selecting ✓ will return to the Span Concentration screen to begin the span calibration again. Selecting ✗ will exit Span Calibration and return to the Gas Calibration Menu.

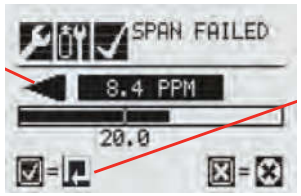

Figure 201. Span Calibration Failed

Once the Zero Gas and Span calibrations are completed successfully, the user will be prompted to:

- exit with inhibit off
- exit with inhibit on, or
- not exit.

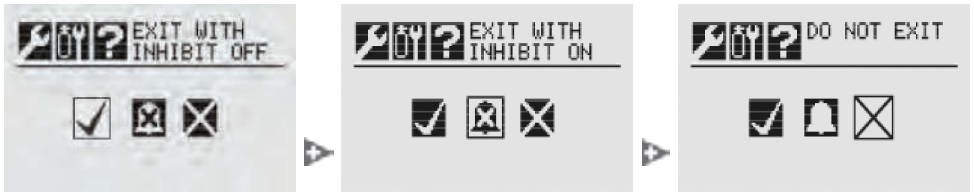

Figure 202. Span Calibration Failed

Warning: When the XNX transmitter is placed in Inhibit Mode, alarms are silenced. This will prevent an actual gas event from being reported. Inhibit Mode must be limited to testing and maintenance only. Exit Inhibit Mode after testing or maintenance activities.

3.2.3 Using the Calibration Cup

Refer to Figure 203 to attach the calibration cup:

1. Snap the calibration cup into the weather protector. The two protrusions on the cup fit into recesses in the weather protector.
2. Attach the hose from the gas cylinder to the calibration cup. Note that the cup's flow is unidirectional. There is an arrow on the bottom showing flow direction
3. Adjust the calibration flow rate[1].

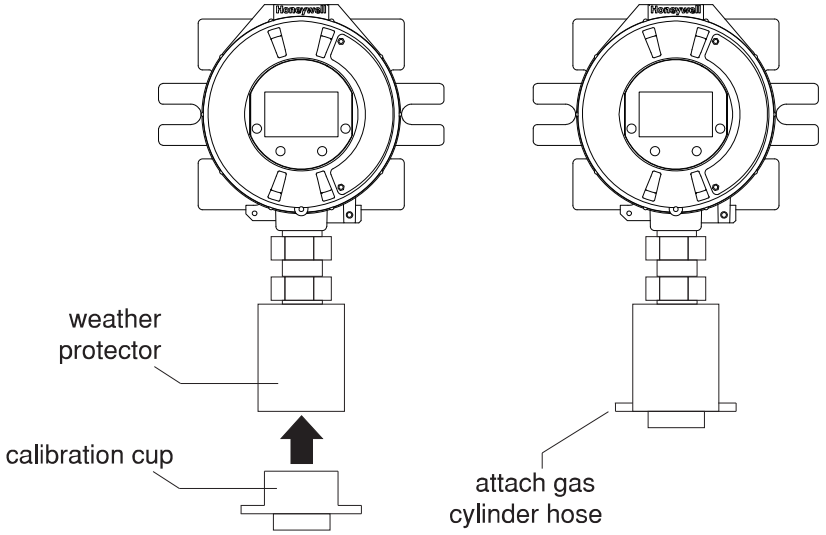

Figure 203. Attaching the Calibration Cup

1 300-375 ml/min for XNX EC sensors, 500 ±200 ml/min for XNX mV sensors, unless otherwise directed

3.2.4 Zero and Span Calibration of XNX EC Hydrogen Sulfide (H_2S) Sensors

Caution: Before initial calibration, allow the sensor to stabilize for 30 minutes after applying power. When in zero and span calibration modes, the current output from the sensor is inhibited (default 2mA) to avoid false alarms.

Caution: Recalibrate if the temperature of local environment has varied by more than ±15°C from the temperature of calibration.

Hydrogen Sulfide sensors can be affected by extreme humidity changes. A sudden increase in ambient humidity can result in a short-term positive drift in the instrument's reading. A sudden decrease in ambient humidity can result in a short-term negative drift in the instrument's reading. These are most likely to be noticed during calibration with dry or cylinder gas.

When calibrating hydrogen sulfide cartridges, the following should be taken into account while following the procedure in Section 3.2.2.

1. To zero the sensor, use a compressed gas cylinder of 20.9%Vol oxygen (not nitrogen). Do not use background air.

If a span calibration is to be performed, the span calibration gas should be applied to the sensor immediately after the zeroing procedure. Do not allow the sensor to return to ambient air conditions.

Warning: Long-term exposure (> 20 minutes) to concentrations exceediing the full-scale range of the sensor can cause it to lose sensitivity. The ouput of the sensor may then decrease in value even though high levels of toxic gas are still present. Before re-calibrating the transmitter, verify the absence of gas.

3.2.5 705/705HT Calibrating

For complete calibration and configuration information, see the Type 705 Operating Instructions (P/N: 00705M5002).

3.2.6 Sensepoint/Sensepoint HT Calibrating

For complete calibration and configuration information, see the Sieger Sensepoint Technical Handbook (P/N: 2106M0502).

3.2.7 Calibrating the Searchpoint Optima Plus

Complete calibration and configuration information can be found in the Searchpoint Optima Plus Operating Instructions (P/N:2108M0501). If properly installed and maintained, the Searchpoint Optima Plus sensor will not require routine calibration. This is due to the inherent stability of the IR absorption process and the unit's fully compensated optical configuration.

1. From the Calibration menu, select the Gas Calibration option.

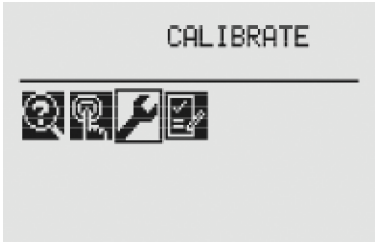

Figure 204. Calibration menu



Figure 205. Gas Calibration menu

2. Perform a zero calibration. When concentration values are stable, select ✓ for XNX to calculate the zero adjustment

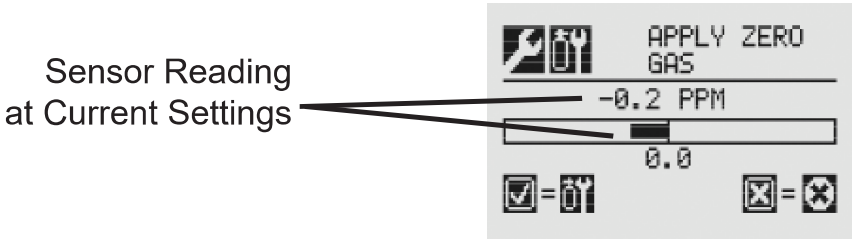

Figure 206. Apply Zero Gas screen

3. Select ✗ to return to the Gas Calibration menu. If the zero calibration was successful, the transmitter will display the Zero Passed screen



Figure 207. Zero Calibration screens

4. Begin the span calibration by entering the concentration value of the calibration gas: Select ✓ to choose the first digit. Use +/- to increment/decrement values. Select ✓ to accept the value and move to the next digit. Use calibration cover P/N 2108B0272 to perform span calibration at a flow regulator of 1 LPM. (If a span calibration is not required, select ✗ to return to the calibration menu.)

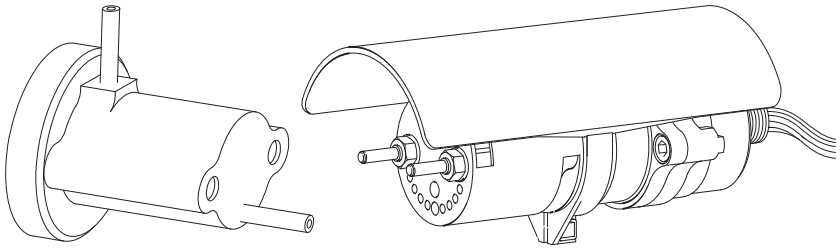

Figure 208. Searchpoint Optima Plus

5. Continue until all three digits have been entered.

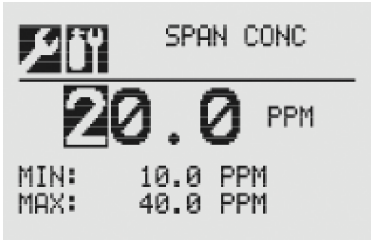

Figure 209. Span Concentration screen

6. Apply the span gas. When concentration values are stable, select ✓ to calculate the span adjustment. This process also determines if the sensor is within range to accurately detect the target gas.

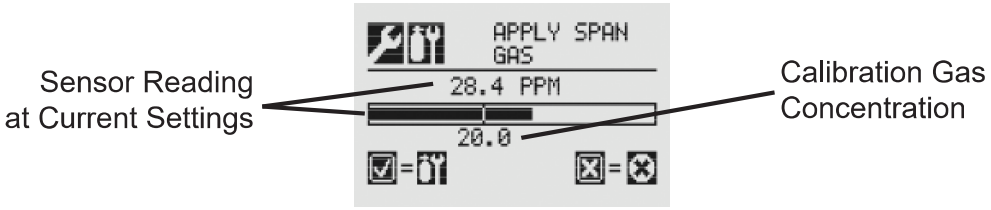

Figure 210. Span adjustment calculation

7. Select ✖ to return to the Gas Calibration menu. If the calibration is not successful, the Span Failed screen will be displayed.

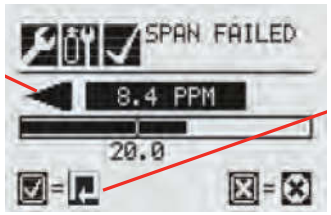

Figure 211. Span Failed screen

Select ✔ to return to the Span Concentration screen to repeat the span calibration.

Select ✖ to exit Span Calibration and return to main Calibrate screen. If Span Calibration is exited, the previous calibration values will be used. Select ✔ to return to the Span Concentration screen.

If the calibration is successful, the Span Passed screen will be displayed.

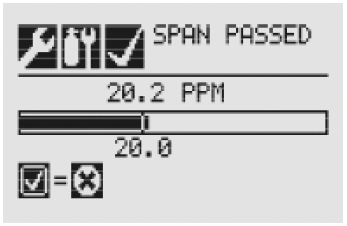

Figure 212. Span Passed screen

8. Exit the Calibration Menu. After the zero and span calibrations have been successfully completed, the user will be prompted to:
   - Exit and turn alarm and fault inhibit off,
   - Exit and leave the transmitter in inhibit mode. or
   - Not exit

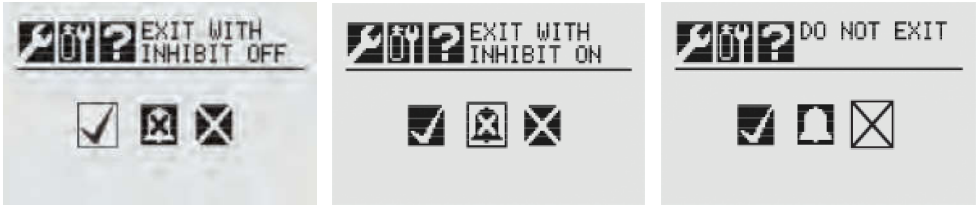

Figure 213. Calibration exit options

Warning: When the XNX transmitter is placed in Inhibit Mode, alarms are silenced. This will prevent an actual gas event from being reported. Inhibit Mode must be limited to testing and maintenance only. Exit Inhibit Mode after testing or maintenance activities.

3.2.8 Zero and Span Calibration for MPD Sensors

Caution: Extended or frequent exposure to elevated concentrations of combustible gases may affect sensor sensitivity. Verify sensor performance by frequent calibration.

Caution: Before initial calibration allow the sensor to stabilize for 30 minutes after applying power. When in zero and span calibration modes, the current output from the sensor is inhibited (default 2mA) to avoid false alarms.

The Gas Calibration menu is for both zero and span calibrations. This section describes how to calibrate MPD flammable sensors fitted to the transmitter. The calibration adjustments are made on the transmitters display. Gassing is performed at the sensor, which may be locally or remotely located.

The following equipment is required:

- Flow housing (P/N: 1226A0411)
- Test gas
- Regulator

Note: Zero gas and Span gas should be at about the same humidity levels to avoid erroneous cell responses.

1. At the MPD, remove the weatherproof cap, if equipped.
2. Fit the flow housing onto the MPD.

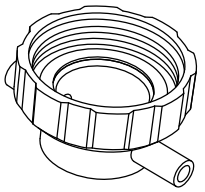

Figure 214. Flow Housing

3. Reverse the cap removal procedure. Figure 215 shows the flow housing accessory fitted to the MPD.

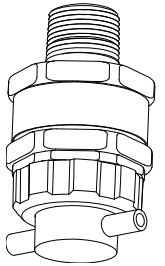

Figure 215. MPD with Flow Housing

4. Connect the flow housing (using either gas pipe) to the regulated cylinder containing a known concentration of the target gas at approximately the sensor alarm point, e.g., 50% LEL methane in air.

Warning: As some test gases are hazardous, exhaust the flow housing outlet to a safe area.

5. Follow the procedure in Section 3.2.1 for both zero and span calibrations.
6. Apply the target gas to the sensor. Pass the gas through the flow housing at a rate of 300-375 ml/min for XNX EC sensors or 500 ±200 ml/min for XNX mV sensors.

Sensors should be calibrated at concentrations representative of those to be measured. It is always recommended that the sensor be calibrated with the target gas it is to detect.



Caution: Responsibility for identifying and recording a sensor calibration made with a different gas rests with the user. Refer to local regulations where appropriate.

Ensure that the sensor and the vicinity around it is clear of all traces of the calibration gas before continuing. This is to avoid triggering spurious alarms.

If calibration fails at any point, discard the cartridge and replace it with a new one (see Section 4.1) .

7. Remove the test equipment, refit the weatherproof cap to the sensor (if previously removed for the test), and return the system to normal operation.

3.2.9 MPD Flammable Sensor Operational Life

The pellistors used in flammable gas sensors can suffer from a loss of sensitivity when in the presence of poisons or inhibitors, e.g., silicones, sulfides, chlorine, lead, or halogenated hydrocarbons. The pellistors are poison resistant to maximize the operational life of the flammable sensor. The typical operating life of the pellistor sensor used in the MPD-CB1 is 60 months.

3.2.10 XNX EC Sensor Operational Life

The typical life of a toxic gas sensor dependst on the application, frequency, and amount of gas exposure. Under normal conditions (3 month visual inspection and 6 month test/recalibration) the toxic sensor has an expected life equal to or greater than these lifetimes:

- 12 months for ammonia, hydrogen chloride, and hydrogen fluoride sensors (see further ammonia information below).
- 24 months for chlorine dioxide, oxygen, and other toxic sensors.

See Section 4 - Maintenance for sensor replacement procedures.



Caution: Oxygen deficient atmospheres (less than 6%V/V) may result in inaccurate readings and performance.

Ammonia electrochemical cells are reliable and suitable for applications where no background concentration of ammonia exists. Under these conditions the cells are expected to operate for 12 to 24 months.

These ammonia cells are of the consumptive type. Their operating life can be adversely affected by continuous or excessive exposure to ammonia, or by prolonged exposure to high temperatures and moisture.

To ensure continued detection availability, bump test the sensors regularly and implement an appropriate cell replacement program.

3.3 Functional Gas Testing (Bump Testing)

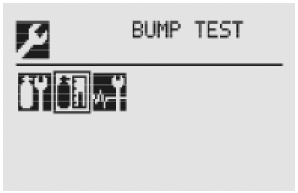

Figure 216. Bump Test Menu

Warning: Exposure to desensitizing or contaminating substances or concentrations causing operation of any alarm may affect sensor sensitivity. Following such events, it is recommended to verify sensor performance by performing a functional gas test (bump test).

It is recommended that the sensor be tested frequently to ensure that the system is operating properly. Different sensor types may require more frequent maintenance, depending on the environmental conditions and the gases present. The weatherproof cover has a spigot for attaching tubing from a gas cylinder. This may be used for a simple functional (bump) test of the sensor. However, environmental conditions may make this unsuitable for some gas typesor applications. It is the responsibility of the user to ensure suitability of this method for each application.

1. When bump gas is applied to the sensor, the bump test screen displays the current reading of the sensor and the peak reading that occurred during the bump test.

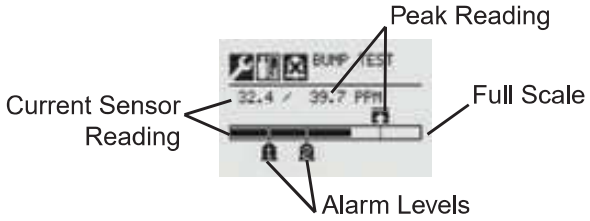

Figure 217. Bump Test Screen

2. If the difference between the reading and the applied gas concentration is outside the acceptable limits for the application, follow the procedures for zeroing and calibrating the sensor (see Section 3.2.1).
3. If the reading is still inaccurate, replace the sensor (see Section 4.1).

Once the bump test is completed successfully, the transmitter will exit the calibration procedure. Before returning to the Gas Calibration menu, the user will be prompted to exit and turn alarm and fault inhibit off, exit and leave the transmitter in inhibit mode, or not exit.

Caution: Exiting before the gas level has fallen below the level of Alarm 1 will cause the transmitter to go into alarm.



Figure 218. Exiting the calibration procedure

3.4 Calibrate mA Output

Use Calibrate mA Output to adjust the milliamp output to provide the correct output levels at peripheral devices connected to the transmitter.

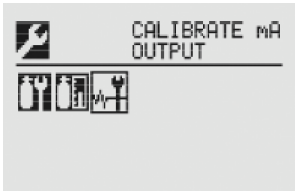

Figure 219. Calibrate mA Output Menu

To adjust the 4mA output, use the ◀ ▶ switches to increase or decrease the output, then use ✔ to accept the new value and move to the 20mA setting or ✖ to discard the selection and return to the previous menu.

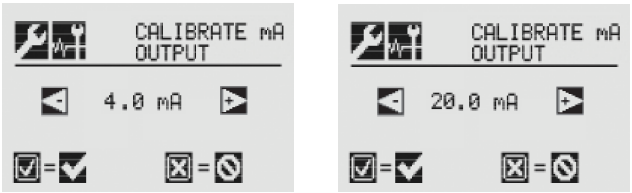

Figure 220. Calibrate mA Output Screens

During installation, an mA meter must be connected in series with the 4-20 mA loop as shown below.

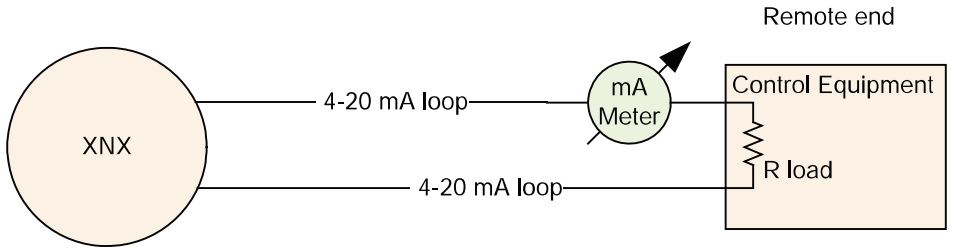

Figure 221. 4-20 mA loop with mA meter

Note: Calibrated mA output is required for proper operation of internal diagnostics.

An F165 fault will be reported if the 4-20 mA calibration fails.

3.5 Align Excel (Searchline Excel)

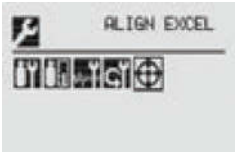

Figure 222. Align Excel Menu

For detailed information on Aligning the Searchline Excel, see the Searchline Excel Technical Manual (P/N: H-MAN0530-V1).

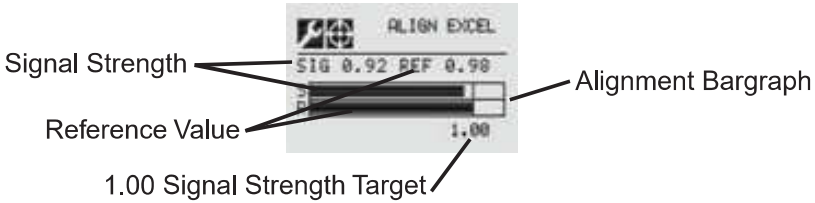

Figure 223. Align Excel Screen

Align the unit using the information found in the Searchline Excel manual. As the alignment is performed, the transmitter display will indicate the signal strength in the form of a bar graph. Align the Excel until the signal strength bar graph reaches or exceeds 1.00 as shown on the display.

3.6 Soft Reset

(Searchline Excel and Searchpoint Optima Plus only)

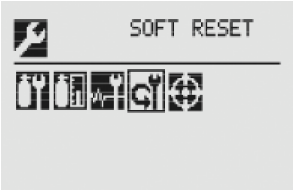

Figure 224. Soft Reset Menu

For transmitters connected to a Searchline Excel or Searchpoint Optima Plus sensor, the Soft Reset sends these infrared devices a signal to restart the sensor.

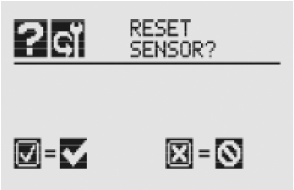

Figure 225. Soft Reset Sensor Screen

4 Maintenance

Warning: When servicing or replacing sensors, reduce the risk of ignition of hazardous atmosphere by declassifying the area or disconnecting the equipment from the supply circuit before opening the sensor enclosure. Keep the assembly tightly closed during operation.

Warning: Take care when handling sensors as they may contain corrosive solutions. Do not tamper or in any way disassemble the sensor cell. Do not expose to temperatures outside the recommended range. Do not expose the sensor to organic solvents or flammable liquids.

Warning: At the end of their working lives, sensors must be disposed of in an environmentally safe manner, in accordance with local waste management requirements and environmental legislation. Sensors should NOT be incinerated as they may emit toxic fumes.

Warning: Verify all outputs, including display, after installation, after service events, and periodically to ensure the safety and integrity of the system.

Caution: The following procedure should be followed carefully and performed only by suitably trained personnel. A fault condition will be signaled by the sensor if it is removed with the unit under power.

Note: If the power-on self-test was skipped during maintenance activities, restart the transmitter.

4.1 MPD Sensor Cartridge Replacement

Using Figure 226 as a guide, follow this procedure:

1. Verify that the label on the new sensor is the correct gas type.
2. Remove power from the transmitter.
3. Unscrew the weatherproof cover (if equipped), loosen the retainer locking screw, and unscrew the sensor retainer.
4. Remove the old sensor by pulling without twisting.
5. Slide the replacement cell into the MPD body taking care to align the tab with the alignment slot, then press the cell firmly to seat it into the body.
6. Refit the sensor retainer, tighten the locking screw and refit the weatherproof cover (if equipped).
7. Recalibrate the sensor following the procedures in Section 3.2.2.

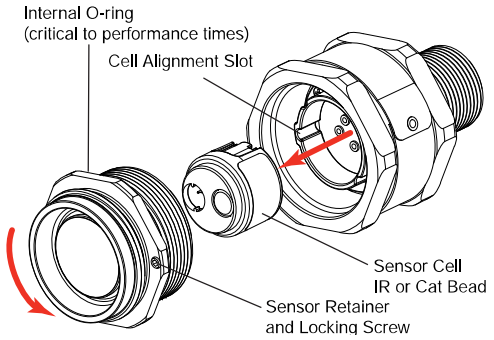

Figure 226. Removing the Plug-in Sensor

4.2 XNX® EC Sensor Cartridge Replacement

Caution: For toxic sensors, remove the shorting clip from the bottom of the sensor prior to installation. No shorting clip is provided with oxygen sensors.

The serviceable sensor allows replacement of the cell inside the sensor. The sensor cell can be replaced with a cell of the same type or changed to detect a different target gas. Both procedures follow.

When replacing oxygen (O_2) sensor cells, the initial warm-up time is between 10 and 15 minutes. This warm-up is required only after sensor cell replacement.

4.2.1 Replacing with the Same Cartridge Type

To replace the cell follow this procedure:

1. Unscrew the weatherproof cover, loosen the sensor retainer locking screw, and unscrew the sensor retainer.
2. Remove the old sensor by pulling without twisting.
3. Unscrew the sensor cap.
4. Remove the old cell by pulling without twisting.
5. Verify that the new cell is the same type as the old one.
6. Plug the new cell into the sensor, taking care to align the sensor pins with the connector holes in the PCB.
7. Refit the sensor retainer, tighten the locking screw, and refit the weatherproof cover.
8. Sensor warm-up will begin and the XNX display will alternate between two screens: “Fault 151” and “WARM.”

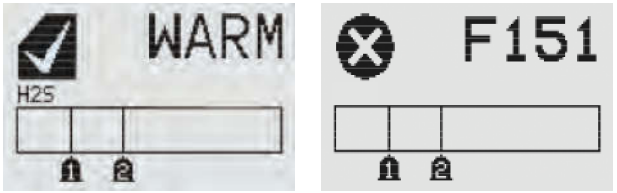

Figure 227. Sensor screens during warmup

9. Follow the procedure to accept the new sensor in Accept New Sensor Type.
10. Recalibrate the sensor following the procedures in Section 3.2.1.

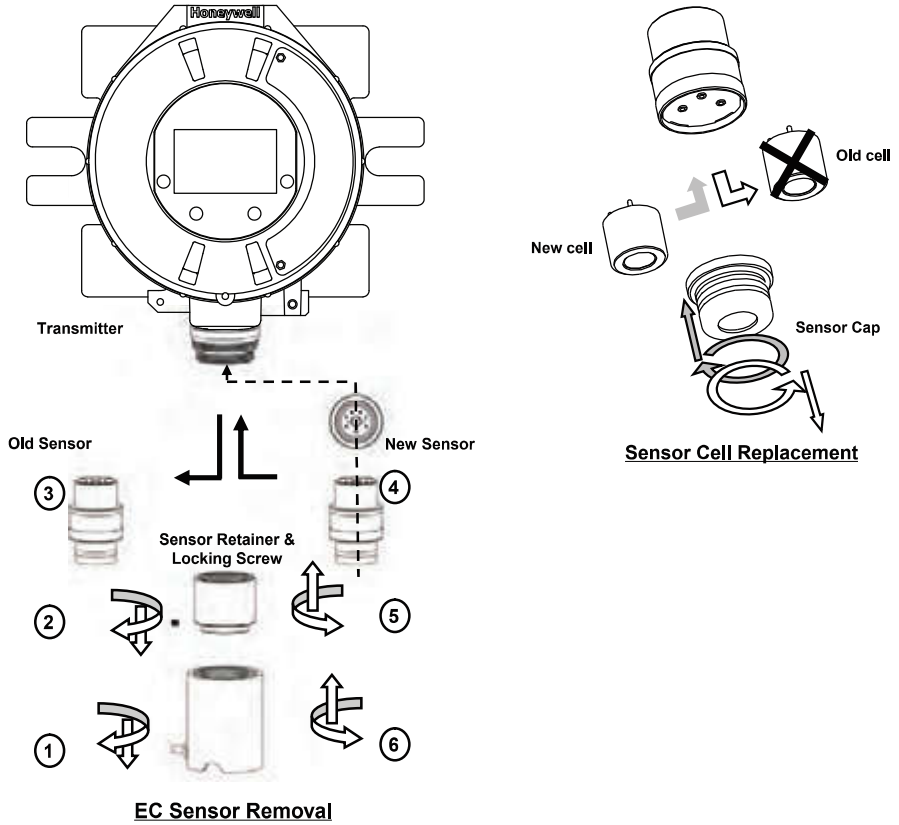

Figure 228. XNX EC Sensor Cell Replacement

4.2.2 Replacing with a Different Cartridge Type

To replace the cell with a cell for a different gas, follow this procedure:

1. Unscrew the weatherproof cover, loosen the sensor retainer locking screw, and unscrew the sensor retainer.
2. Remove the old sensor by pulling without twisting.
3. Unscrew the sensor cap.
4. Remove the old cell by pulling without twisting.
5. Plug the new cell into the sensor, taking care to align the sensor pins with the connector holes in the PCB.
6. Refit the sensor, taking care to align the sensor pins with the connector.
7. Refit the sensor retainer, tighten the locking screw, and refit the weatherproof cover.
8. The transmitter will enter sensor warm-up mode. However, due to the change in sensor cell type, the transmitter will not enter monitor mode until the unit has been reconfigured. The display will show the sensor warm-up screen:

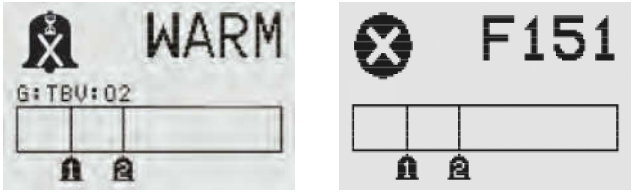

Figure 229. Sensor screens during warmup

Note the message “G:TBV:O2”. “TBV” indicates that the operator must reconfigure the transmitter to recognize the new sensor cell. “O2” will reflect the target gas of the new cell, i.e., H2S, NO2, etc. The display will also alternate the warm-up screen with the Fault 151 screen. This indicates that the communication between the transmitter and the original cell is no longer recognized. This fault condition will clear after the transmitter has been properly reconfigured.

The reconfiguration of the XNX for a new cell/target gas is achieved through Accept New Sensor Type. Recalibrate the sensor following the procedures in Section 3.2.2.

5 Warnings and Faults

5.1 Warning Messages

Warning	Description	Applicable Sensors	Latching / Non-Latching	Frequency of Diagnostic	Event History Data	Action For Resolution
W001	XNX® 24 VDC Supply Bad	All	Non-latching	2 seconds	XNX supply voltage x1000	Check wire of 24V power supply to XNX as well as power supply operation.
W002	XNX Temperature Error	All	Non-latching	2 seconds	XNX temperature (Celsius)	Check location for heat sources. Fit with sunshade or other protection. Change location of XNX. Check temperature in Info->Transmitter Status to ensure temperature is being measured properly.
W003	Simulated Warning/Fault	All	Non-latching	Enabled by user	0	Performing an alarm/fault reset will clear all simulation.
W005	Sensor Temperature Error	Optima	Non-latching	XNX polls sensor every 2 seconds, diagnostic frequency controlled by sensor	Sensor fault or warning code (Note 4)	Check location for heat sources. Fit with sunshade or other protection. Change location of XNX. Check temperature in Info->Sensor Status to ensure temperature is being measured properly.
	Sensor Temperature Error	Excel	Non-latching	XNX polls sensor every 2 seconds, diagnostic frequency controlled by sensor	Sensor fault or warning code (Note 4)	Check location for heat sources. Fit with sunshade or other protection. Change location of XNX. Check temperature in Info->Sensor Status to ensure temperature is being measured properly.
	Sensor Temperature Error	ECC	Non-latching	2 seconds	Sensor temperature (Celsius)	Check location for heat sources. Fit with sunshade or other protection. Change location of XNX. Check temperature in Info->Sensor Status to ensure temperature is being measured properly.
W006	Negative Drift	ECC, mV	Non-latching	2 seconds	Raw gas concentration of sensor	Check sensor location for external interference. Perform zero calibration. If problem persists after zero calibration and no interference exists, replace sensor.
	Negative Drift	Optima, Excel	Non-latching	XNX polls sensor every 2 seconds, diagnostic frequency controlled by sensor	Sensor fault or warning code	Check sensor location for external interference. Perform zero calibration. If problem persists after zero calibration and no interference exists, replace sensor.
W007	Calibration Required	All	Non-latching	2 seconds	Number of days remaining until calibration expires, negative = number of days expired	Time since the last span calibration has exceeded a defined limit. Performing a successful span calibration will clear the condition. The limit is the user-defined calibration interval. W007 can be disabled by setting the calibration interval to 0.

Warning	Description	Applicable Sensors	Latching / Non-Latching	Frequency of Diagnostic	Event History Data	Action For Resolution
W009	Sensor 24 VDC Supply Bad	Optima, Excel	Non-latching	XNX polls sensor every 2 seconds, diagnostic frequency controlled by sensor	Sensor fault or warning code (Note 4)	Check wire of 24V power supply to XNX as well as power supply operation. Also check wiring between XNX and Optima/Excel.
W010	Sensor Path Obscured	Optima	Non-latching	XNX polls sensor every 2 seconds, diagnostic frequency controlled by sensor	Sensor fault or warning code (Note 4)	Check location for external interference. Check sensor for dirty windows.
	Beam Block	Excel	Non-latching	XNX polls sensor every 2 seconds, diagnostic frequency controlled by sensor	Sensor fault or warning code (Note 4)	Check location for external interference or obstructions in the IR path. Check sensor for dirty windows. Check Excel alignment.
W011	Sensor Internal Lamp Issue	Optima	Latching	XNX polls sensor every 2 seconds, diagnostic frequency controlled by sensor	Sensor fault or warning code (Note 4)	Remove and return to Honeywell for repair.
W012	Excessive Float	Optima, Excel	Non-latching	XNX polls sensor every 2 seconds, diagnostic frequency controlled by sensor	Sensor fault or warning code (Note 4)	Check sensor location for external interference, check sensor for operation and re-zero where appropriate.
W013	Sensor Loop Failure, (Sensor is losing/ has lost mA output signal. These are detected by Optima and Excel.	Optima, Excel	Latching	XNX polls sensor every 2 seconds, diagnostic frequency controlled by sensor	Sensor fault or warning code (Note 4)	Check that supply voltage is stable. Check wiring between Optima/ Excel and XNX. Check loop impedance of wiring. Check that switches S3 and S4 are set correctly. If the switch settings need to be changed, power down the transmitter before changing the switch settings. Once the problem has been resolved, a Soft Reset must be performed for the Calibration menu to clear W013.
W014	Sensor Real Time Clock issue	Excel	Non-latching	XNX polls sensor every 2 seconds, diagnostic controlled by sensor	Sensor fault or warning code (Note 4)	Reset “date and time” in Excel, re-cycle Excel power and confirm “date and time.” If not retained, remove and return to Honeywell for repair.

Warning	Description	Applicable Sensors	Latching / Non-Latching	Frequency of Diagnostic	Event History Data	Action For Resolution
W015	Sensor Internal Failure	Optima, Excel	Latching and Non-latching	XNX polls sensor every 2 seconds, diagnostic frequency controlled by sensor	Sensor fault or warning code (Note 4)	Remove and return to Honeywell for repair.
	Sensor has an internal software error	Excel	Latching	XNX polls sensor every 2 seconds, diagnostic frequency controlled by sensor	Sensor fault or warning code (Note 4)	Cycle Excel power and confirm “fault cleared.” If not, replace sensor.
W016	Sensor Installation Not Complete	Excel	Non-latching	XNX polls sensor every 2 seconds, diagnostic frequency controlled by sensor	Sensor fault or warning code (Note 4)	Check Excel alignment. Perform a zero calibration.
W018	General Diagnostics	Optima, Excel	Non-latching	XNX polls sensor every 2 seconds, diagnostic frequency controlled by sensor	Sensor fault or warning code (Note 4)	Check sensor connections, check sensor operation, fit replacement sensor, replace personalty board.
W019	Sensor Internal 5V Power Supply Defect	Excel	Non-latching	XNX polls sensor every 2 seconds, diagnostic frequency controlled by sensor	Sensor fault or warning code (Note 4)	Remove and return to Honeywell for repair.
W020	Forced mA Timeout	All	Latching	1 second	Forced mA	Indicates that a forced mA condition was left on for more than 15 minutes. No action required as mA operation will be returned to normal automatically.
W021	Forced Relay Timeout	All	Latching	1 second	Forced relay status, 1=Alarm1 on, 2=Alarm2 on, 4=Fault on	Indicates that a forced relay condition was left on for more than 15 minutes. No action required as relay operation will be returned to normal automatically.
W022	mV Sensor Calibration Needed	mV	Latching	When user changes sensor type or gas	1=new sensor, 2=changed personality, 3=changed gas	Generated after accepting a new mV sensor or changing the mV sensor type or changing the mV gas selection. This is a warning to user that a span calibration should be performed. If a span calibration is not performed, the default calibration values will be used.

Warning	Description	Applicable Sensors	Latching / Non-Latching	Frequency of Diagnostic	Event History Data	Action For Resolution
W023	Low Optical Sample Signal	Excel	Non-latching	XNX polls sensor every 2 seconds, diagnostic frequency controlled by sensor	Sensor fault or warning code (Note 4)	Check location for external interference or obstructions in the IR path. Check sensor for dirty windows. Check Excel alignment. Check Beam Block Low Signal Percentage setting in the transmitter.
W024	Reflex Failure Warning	ECC	Latching	Dependent on sensor, typically 8 hours; Once fault is detected: every 15 minutes	0	ECC sensor is nearing end of life. Replace sensor.
W025	Safety variable fail warning	All	Latching	2 seconds	Note 3	Contact Honeywell Analytics Service Department.

NOTES

Note 3:

Subtypes	Decimal	Description
Fault 2 Event Bits	1	CRC error in safety critical RAM block
	2	Error reloading safety critical RAM block from EEPROM
	4	Error loading data from Personality board
	8	Excel signal level has been below the low signal level threshold for at least 24 hours
	16	Excel beam blocked
	32	Personality board error code > 0
	64	Option board error code > 0
	128	IR mA input > 1 mA and < 3.4 mA
	256	IR mA input < 1.0 mA
	512	IR forced 10 mA not within +/-1 mA
	1024	gains from PGA don't match local copy
	2048	error reading or writing EEPROM
	4096	ECC reflex failure
	8192	RAM test failure
	16384	Program memory CRC failure
	32768	Op code test failure
Fault 3 Event Bits	1	Interrupt integrity test failure

Note 4:

Optima and Excel fault and warning codes are displayed in the Event History data field.

5.2 Fault Messages

Fault	Description	Applicable Sensors	Latching / Non-Latching	Frequency of Diagnostic	Event History Data	Action For Resolution
F101	Unexpected Sensor Reset	All	Non-latching	ECC & mV: main loop x2; Optima & Excel: 2 seconds	Note 2. Optima or Excel: Sensor fault or warning code (Note 4)	If repeated, check supply voltage, check cable loop impedance, check terminal connections
F103	XNX Temperature Error	All	Non-latching	2 seconds	XNX temperature (Celsius)	Check location for heat sources. Fit with sunshade or other protection. Change the transmitter's location. Check temperature in Info->Transmitter Status to ensure temperature is being measured properly.
F104	XNX 24 VDC Supply Bad	All	Non-latching	2 seconds	XNX supply voltage x1000	Check the wire of the 24V power supply to the transmitter and the power supply operation.
F105	3.3VDC Supply Bad on XNX, personality board, or option board	All	Non-latching	2 seconds	1=XNX, 2=Personality board, 3=Option board	Check Transmitter Status
F106	XNX Real Time Clock Failure	All	Non-latching	2 seconds	Total seconds since Jan 1, 1970	Either clock was incorrectly set or the battery for the clock has failed. Note: the clock will stop running on January 1, 2036.
F107	XNX Internal Failure (RAM, ROM, EEPROM, Opcode)	All	Non-latching except for EEPROM error	At power up and 8 hours	Note 3	Contact Honeywell Analytics' Service Department.
F108	XNX mA Output Loop Failure	All	Latching	2 seconds	mA output error (measured mA - set mA)	Check wiring of mA output from XNX. Check that switches S1 and S2 are set correctly. Note that if F108 is not resolved quickly, an F149 (Internal Communication Failure - mA) will also be generated. When the cause of F108 is resolved, both the F108 and F149 will be cleared.
F109	Simulated Warning/Fault	All	Non-latching	Enabled by user	0	Performing an alarm/fault reset will clear all simulation.
F110	Sensor software mismatch	Optima	Latching	Only checked at power up	Sensor firmware version x10	Contact Honeywell Analytics' Service Department.
F111	Negative Drift	ECC, mV	Non-latching	2 seconds	Raw gas concentration of sensor	Check sensor location for external interference. Perform zero calibration. If problem persists after zero calibration and no interference exists, replace sensor.
	Negative Drift; may indicate a failed IR sensor	Optima, Excel	Non-latching	XNX polls sensor every 2 seconds, diagnostic frequency controlled by sensor	Sensor fault or warning code	Check sensor location for external interference. Perform zero calibration. If problem persists after zero calibration and no interference exists, replace sensor.

Fault	Description	Appli-cable Sensors	Latching / Non-Latching	Frequency of Diagnostic	Event History Data	Action For Resolution
F112	Sensor 24 VDC Supply Bad	Optima, Excel	Non-latching	XNX polls sensor every 2 seconds, diagnostic fre-quency controlled by sensor	Sensor fault or warn-ing code (Note 4)	Check the wire of the 24V power supply to the transmitter and the power supply operation. Also check the wiring between the transmitter and the Optima/Excel.
F113	Sensor Internal 5V Power Supply Defect	Excel	Non-latching	XNX polls sensor every 2 seconds, diagnostic fre-quency controlled by sensor	Sensor fault or warn-ing code (Note 4)	Remove and return to Honeywell for repair.
F114	Sensor Internal Lamp Issue	Optima	Latching	XNX polls sensor every 2 seconds, diagnostic fre-quency controlled by sensor	Sensor fault or warn-ing code (Note 4)	Remove and return to Honeywell for repair.
F116	Sensor Internal Failure	Optima, Excel	Non-latching	XNX polls sensor every 2 seconds, diagnostic fre-quency controlled by sensor	Sensor fault or warn-ing code (Note 4)	Remove and return to Honeywell for repair.
F117	Sensor Loop Failure, (Sensor is losing/has lost mA output signal. These are detected by Optima and Excel, F161 is de-tected by XNX and will usually occur before F117.)	Optima, Excel	Latching	XNX polls sensor every 2 seconds, diagnostic fre-quency controlled by sensor	Sensor fault or warn-ing code (Note 4)	Check that supply voltage is stable. Check wiring between Optima/Excel and the transmitter. Check loop impedance of wiring. Check that switch-es S3 and S4 are set correctly. If the switch settings need to be changed, power down the transmitter before changing the switch settings. Once the problem has been resolved, a Soft Reset must be performed for the Calibration menu to clear F117.
F118	Sensor Real Time Clock issue	Excel	Non-latching	XNX polls sensor every 2 seconds, diagnostic con-trolled by sensor	Sensor fault or warn-ing code (Note 4)	Reset “date and time” in Excel, recycle Excel power, and confirm “date and time. If not retained, remove and return to Honeywell for repair.

Fault	Description	Applicable Sensors	Latching / Non-Latching	Frequency of Diagnostic	Event History Data	Action For Resolution
F119	Cartridge Internal Electrical Failure	ECC, mV	Non-latching	XNX polls sensor every 2 seconds, diagnostic frequency controlled by sensor	Note 5	Check cartridge connections, check sensor operation, fit replacement cartridge, replace personality board.
F120	No Sensor	ECC, mV, Optima, Excel	Non-latching	2 seconds	Note 2	Indicates a loss of communication with the sensor. Check that the sensor type indicated in the part number matches the installed hardware. Check the wiring between ECC sensors or Optima/Excel and the XNX.
F121	Wrong Cartridge, error loading sensor parameters	All	Non-latching	At power up and when cartridge is changed	0	Contact Honeywell Analytics' Service Department.
F122	General Diagnostics	Optima, Excel	Non-latching	XNX polls sensor every 2 seconds, diagnostic frequency controlled by sensor	Sensor fault or warning code (Note 4)	Check sensor connections, check sensor operation, fit replacement sensor, replace personalty board.
F123	Sensor Temperature Error	Optima	Non-latching		Sensor fault or warning code (Note 4)	Check location for heat sources. Fit with sunshade or other protection. Change location of the transmitter. Check temperature in Info->Sensor Status to ensure temperature is being measured properly.
	Sensor Temperature Error	Excel	Non-latching	XNX polls sensor every 2 seconds, diagnostic frequency controlled by sensor	Sensor fault or warning code (Note 4)	Check location for heat sources. Fit with sunshade or other protection. Change location of the transmitter. Check temperature in Info->Sensor Status to ensure temperature is being measured properly.
	Sensor Temperature Error	ECC	Non-latching	2 seconds	Sensor temperature (Celsius)	Check location for heat sources. Fit with sunshade or other protection. Change location of XNX. Check temperature in Info->Sensor Status to ensure temperature is being measured properly.
F125	Calibration Required	All	Non-latching	2 seconds	Number of days remaining until calibration expires, negative = number of days expired	Time since the last span calibration has exceeded a defined limit. Performing a successful span calibration will clear the condition. The limit is the maximum calibration interval.

Fault	Description	Applicable Sensors	Latching / Non-Latching	Frequency of Diagnostic	Event History Data	Action For Resolution
F126	Sensor Path Obscured	Optima	Non-latching	XNX polls sensor every 2 seconds, diagnostic frequency controlled by sensor	Sensor fault or warning code (Note 4)	Check location for external interference. Check sensor for dirty windows.
F127	Beam Block	Excel	Non-latching	XNX polls sensor every 2 seconds, diagnostic frequency controlled by sensor	Sensor fault or warning code (Note 4)	Check location for external interference or obstructions in the IR path. Check sensor for dirty windows. Check Excel alignment.
F128	Sensor Installation Not Complete	Excel	Non-latching	XNX polls sensor every 2 seconds, diagnostic frequency controlled by sensor	Sensor fault or warning code (Note 4)	Check Excel alignment. Perform a zero calibration.
F130	Option Communication Failure	All	Non-latching	2 seconds	Option module ID: 0=None, 1=Foundation™ Fieldbus, 2=Modbus®, 3=Relay	Check that installed option matches the option indicated in the XNX part number. If the option has been changed, the new option must be set up in Information->Transmitter Data as described in the manual.
F133	Not used					
F143	Stabilization Timeout	All	Latching	2 seconds	Warm up time (seconds x100)	Cycle power, contact Honeywell Analytics' Service Department if problem persists.
F145	Reflex Failure	ECC	Non-latching	Dependent on sensor, typically 8 hours; Once fault is detected: every 15 minutes	nA/mV	ECC sensor is no longer functioning properly. Replace sensor.
F146	Unknown Sensor Failure	Optima, Excel	Non-latching	2 seconds	Sensor fault or warning code (Note 4)	Contact Honeywell Analytics' Service Department.
F148	Internal option board hardware failure	All	Non-latching	2 seconds	Option board error status (Note 6)	Contact Honeywell Analytics' Service Department.

Fault	Description	Appli-cable Sensors	Latching / Non-Latching	Frequency of Diagnostic	Event History Data	Action For Resolution
F149	Internal 4-20 mA monitoring circuit communication failure	All	Non-latching	3.366 seconds	0	Contact Honeywell Analytics' Service Department.
F150	mA Output Monitor Communications Watchdog Error	All	Non-latching	138 us	Communication error count	Contact Honeywell Analytics' Service Department.
F151	Sensor Module Type Changed	ECC	Non-latching	2 seconds	Module type: 0=None, 1=ECC, 2=mV, 3=Excel, 4=Optima, 5=Generic mA	For ECC: Perform Accept New Sensor function, if problem persists contact Honeywell Analytics' Service Department. For others, contact Honeywell Analytics' Service Department.
F152	Option Module Configuration Error	All	Latching	Only at powerup or every 125 ms when no option board detected	Option module ID: 0=None, 1=Founda-tion Fieldbus, 2=Mod-bus, 3=Relay	Confirm option properly installed, reconfigure unit.
F153	Signal/Data mis-match error on IR personality	Optima, Excel	Non-latching	2 seconds	Digital sensor reading	Check wiring to Optima/Excel. In particular, check the white wire be-tween XnX and Optima/Excel. Note: power must be cycled to reset F153 after correcting the cause.
F154	mA Input Diagnos-tic Failure	Optima, Excel	Latching	5 minutes after power up and then every 8 hours	Input mA	Contact Honeywell Analytics' Service Department.
F155	Generic mA Sensor Type Error	Generic mA	Non-latching	2 seconds	Input mA	Indicates that mA input from sensor is less than 3 mA. Check wiring between XNX and sensor. Also check the switches S3 and S4 are set correctly. If the switch settings need to be change, power down the XNX before changing the switch settings. If wiring and switches are okay, replace sensor.
F156	mV Current Control Failure	mV	Non-latching	Main loop x16	constant current A/D input mV	Check that correct mV sensor type is selected. Check wiring between XNX and sensor. If sensor type and wiring are okay, replace sensor.
F157	Sensor Drift Fault	ECC, mV	Non-latching	2 seconds	Current baseline	Perform zero calibration. If problem persists, replace sensor.
F158	Sensor/Personal-ity Part Number mismatch	All	Non-latching	"ECC & mV: main loop x2; Optima & Excel: 2 seconds"	Entire personality part #	Check that installed option matches the option indicated in the XNX part number, check wiring to Optima/Excel.

Fault	Description	Appli-cable Sensors	Latching / Non-Latching	Frequency of Diagnostic	Event History Data	Action For Resolution
F159	Option Part Num-ber Mismatch	All	Non-latching	Only at powerup or every 125 ms when no option board detected	Entire option part #	Check that installed option matches the option indicated in the XNX part number, check wiring to Optima/Excel.
F160	Hardware Diagnos-tic Failure	ECC, mV	Non-latching	Main loop x2	Gain1 high byte, Gain2 low byte	Replace defective EC cartridge or mV personality board.
F161	mA Input Indicates Fault	Optima, Excel	Non-latching	1 second	Input mA	Indicates mA input from Optima/Excel is below 1 mA, indicating a fault in the sensor. Any other fault will also trigger this fault, so check for addi-tional faults in event history to determine specific issue. If no other faults indicated, check wiring between Optima/Excel and XNX. Also check that switches S3 and S4 are set correctly.
F162	Error reloading safety critical RAM block	All	Non-latching	2 seconds	Note 3	Contact Honeywell Analytics' Service Department.
F163	Interrupt integrity fault	All	Non-latching	Main loop	Note 3	XNX will reset if more than 600,000 successive errors occur.
F164	mV Sensor failure	mV	Latching	1 second	mV bridge voltage or bridge current that caused fault	Indicates that the sensor was changed or is bad. If the fault will not clear, replace the sensor.

Fault	Description	Appli-cable Sensors	Latching / Non-Latching	Frequency of Diagnostic	Event History Data	Action For Resolution
F165	mA Calibration failure	all	Latching	2 seconds	DAC: Digital to Analog Converter (4-20 mA output) ADC: Analog to Digital Converter (4-20 mA internal feedback) 0 OK 1 DAC 4 mA point is too low 2 DAC 4 mA point is too high 4 DAC 20 mA point is too low 8 DAC 20 mA point is too high 16 ADC 4 mA point is too low 32 ADC 4 mA point is too high 64 ADC 20 mA point is too low 128 ADC 20 mA point is too high	Indicates that 4-20 mA calibration failed and discarded. Events history parameter indicates which calibration point has failed. If 4-20 mA calibration fails with F165, no changes take place so the 4-20 mA calibration output stays as it was. Check 4-20 mA loop resistance. Repeat 4-20 mA calibration. The fault clears itself after a successful 4-20 mA calibration.

NOTES

Note 2:

Spi Event Bits	
Decimal	**Description**
1	SPI1 Starting TX
2	SPI1 transmitting
4	falling clock edge, 0 = rising edge
8	SPI1 port open, 0 = closed
16	SPI1 no response
32	SPI1 ECC no response
64	SPI1 missing data
128	Not used
256	SPI3 Starting TX
512	SPI3 transmitting
1024	falling clock edge, 0 = rising edge
2048	SPI3 port open, 0 = closed
4096	Not used
8192	
16384	
32768	SPI2 Starting TX

Note 3:

Subtypes	Decimal	Description
Fault 2 Event Bits	1	CRC error in safety critical RAM block
	2	Error reloading safety critical RAM block from EEPROM
	4	Error loading data from Personality board
	8	Excel signal level has been below the low signal level threshold for at least 24 hours
	16	Excel beam blocked
	32	Personality board error code > 0
	64	Option board error code > 0
	128	IR mA input > 1 mA and < 3.4 mA
	256	IR mA input < 1.0 mA
	512	IR forced 10 mA not within +/-1 mA
	1024	gains from PGA don't match local copy
	2048	error reading or writing EEPROM
	4096	ECC reflex failure
	8192	RAM test failure
	16384	Program memory CRC failure
	32768	Op code test failure
Fault 3 Event Bits	1	Interrupt integrity test failure

Note 4:

Optima and Excel fault and warning codes are displayed in the Event History data field.

Note 5:

Subtypes	Decimal	Description
ECC Fault Subtypes	1	I2C error reading or writing EEPROM
	2	GALPAT RAM test failure
	4	Program memory CRC failure
	8	Opcode test failure
	16	Can't adjust PGA or EEPROM value doesn't match digital pot
	32	Reserved
	64	Reserved
	128	GALPAT RAM test failure in common area
mV Fault Subtypes	1	I2C error reading or writing EEPROM
	2	GALPAT RAM test failure
	4	Program memory CRC failure
	8	Opcode test failure
	16	Can't adjust PGA or EEPROM value doesn't match digital pot
	32	RAM safety variable failure
	64	Interrupts integrity failure
	128	Stack overflow/underflow failure

Note 6:

Relay Option Board Error Status		
	Decimal	**Description**
Relay Option Board Error Status	1	Didn't receive STX or ETX
	2	Received undefined command
	4	Exceeded maximum data bytes
	8	Write collision or buffer overrun
	16	CRC error in SPI packet
	32	Stack overflow or underflow
	64	Program memory CRC error
	128	Galpat RAM test failure

5.3 Informational Messages

Number	Description	Contents of Data Field
I001	Unused	
I002	Force Relay Mode Started	Bitpattern for relays. (E.G. 7.0 ==All)
I003	Force Relay Mode Ended.	N/A
I004	Force mA Mode Started	Force current. (E.G. 20.0)
I005	Force mA Mode Ended	N/A
I006	Short-Term Inhibit Started	N/A
I007	Short-Term Inhibit Ended	N/A
I008	Long-Term Inhibit Started	N/A
I009	Long-Term Inhibit Ended	N/A
I010	mA Output Recalibrated	N/A
I011	Bump Test Started	N/A
I012	Bump Test Timed Out	N/A
I013	Bump Test Completed Concentration < Al1	Peak concentration observed
I014	Bump Test Completed Al1 < Concentration < Al2	Peak concentration observed
I015	Bump Test Completed. Al2 < Concentration	Peak concentration observed
I016	Zero Calibration Successful	N/A
I017	Zero Calibration Failed	Error code
I018	Calibrate Span Successful 1 of 2	Percent change in span factor from previous
I019	Calibrate Span Successful 2 of 2	Absolute span factor
I020	Calibrate Span Failed	Error code
I021	Calibrate Span Timeout	N/A
I022	Password Changed	1,2 or 3 (access level)
I023	Performing Soft Reset	N/A
I024	Alarms Configured Latching	N/A
I025	Alarms Configured Non-Latching	N/A
I026	Alarm Relays Configured Normally Energized	N/A
I027	Alarm Relays Configured Normally De-Energized.	N/A
I028	Fieldbus Address Changed	New address (e.g. 15)
I029	Fieldbus Speed Changed	New speed (e.g. 19200)
I030	Sensor Type Changed	iCurrentCalGlobalID
I031	Gas Selection Changed	iCurrentCalGlobalID
I032	Time For Beam Block Fault Changed	iBlockFltTime
I033	Time For Fault Detection Changed	iOtherFltTime
I034	Level For Low Signal Fault Changed	fLowSignalLevel
I035	Invalid Path Length Written	fPathLen
I036	Path Length Changed	fPathLen
I037	mA for Inhibit Changed	f_mA_Flt_Step[0]
I038	mA for Warning Changed	f_mA_Flt_Step[1]
I039	mA for Overrange Changed	f_mA_Flt_Step[2]
I040	mA for Fault Changed	f_mA_Flt_Step[3]
I041	mA for Low Signal Changed	f_mA_Flt_Step[4]
I042	mA for Blocked Beam Changed	f_mA_Flt_Step[5]
I043	Concentration for mA Full Scale Changed	fDisplayRange
I044	Instrument Id Changed	N/A
I045	Measuring Units Changed	iMeasurementUnits
I046	Alarm 1 Reconfigured for Increasing Concentrations	N/A
I047	Alarm 1 Reconfigured for Depleting Concentrations	N/A

Number	Description	Contents of Data Field
I048	Alarm 2 Reconfigured for Increasing Concentrations	N/A
I049	Alarm 2 Reconfigured for Depleting Concentrations	N/A
I050	Alarm 1 Value Changed	fAlarmThres[0]
I051	Alarm 2 Value Changed	fAlarmThres[1]
I052	Clock Set	N/A
I053	Date Format Changed	iDateFormat
I054	Sensor Boots	N/A
I055	Unused	
I056	Sensor RTC Adjusted	Error in seconds or +/-999 if large
I057	Fault Set Latching	
I058	Fault Set Non-Latching	
I059	LCD Heater On	
I060	LCD Heater Off	
I061	Personality Power Up	Sensor type
I062	Option Power Up	Option type
I063	Loaded Same Cell	
I064	Loaded Changed Cell	
I065	Loaded Changed Gas	
I066	Option Type Changed	
I067	HART® Address Changed	
I068	HART Mode Changed	

6 Specifications

6.1 Product Specifications

Electrical			
Operating Voltage	EC/mV: 16V to 32V (24V nominal) ** Startup/Normal values ** IR: 18V to 32V (24V nominal) ** Startup/Normal values **		
Power Consumption	**Configuration**	**Max Power**	**Inrush**
	XNX EC	6.2 w	<1A, <10ms@24VDC
	XNX mV	6.5 w	<750mA <2ms@24VDC
	XNX IR (Optima)	9.7w	<1A, <10ms@24VDC
	XNX IR (Excel)	13.2w	<1A, <10ms@24VDC
Termination	Crimp style pluggable with retaining screws, 12-28 AWG (2.5 to 0.5mm^2) with Shorting Jumpers: 14-28 AWG (2.0 to 0.5mm^2) **NOTE:** To maintain EMC integrity, wiring must be shielded by either an integral shield or run through conduit or pipe. Shield should provide 90% coverage		
20 mA Signal	HART® over 3-wire 4-20mA (sink, source, or isolated) compliant with NAMUR NE43		
Cable Ports	5 – (2 right, 2 left, 1 bottom) Available in ¾" NPT, or M25		
Recommended Cable	See Section 2.2.2 Distance Considerations for Installation.		
Construction			
Material	LM25 Aluminum, (SS316 painted optional)		
Dimensions	159 x 197 x 113.8 mm / 6.138 x 7.75 x 4.48 inches		
Weight	2.27 kg (5 lb) Aluminum 5 kg (11 lb) Stainless		
Mounting			
XNX® Enclosure	Integral Mounting Lugs for Wall- or Optional Pipe-Mount, Optional Wall/Ceiling Bracket		

User Interface	
Standard	Custom Backlit LCD, magnetic wand access
Optional	HART Handheld with IS Port
Environmental - Transmitter Operating	
IP Rating	IP66
Temperature*	-40°C to +65°C / -40°F to +149°F
Humidity	0 to 99% RH non-condensing
*Operating temperatures will be limited by the sensors. See tables 6.2.2, 6.2.3, and 6.2.4 for more information.	
Environmental - Transmitter Storage	
Temperature	-40°C to +65°C / -40°F to +149°F
Humidity	0 to 99% RH non-condensing
Unpowered battery life: (Real Time Clock) 3 years at rated storage temperature	

Hazardous Area Approvals [See Section 6.2 Certifications by Part Number for other approvals (pending)]

XNX-UT**-*****
UL Classified and CSA Listed (see notes below)
Class I, Div. 1 Groups A, B, C & D Class I, Zone 1 Group IIC
UL Classified
Class II, Div. 1 Groups F & G, Class II, Zone 20 & 21
FM Approvals Listed
AEx D IIB + H2 T6 -40 ºC ≤Tamb ≤65 ºC
AEx D [ia IIC} IIB + H2 T6 -40 ºC ≤Tamb ≤65 ºC (XNX UT*E-***** & XNX-UT*-*H****)

XNX-AM**-*****
UL/Demko 09 ATEX 0809943X / IEC Ex UL 09.0010X
II 2 G Ex d IIC T6 (Tamb -40 °C to +65 °C) IP 66
II 2 D Ex tb IIIC T85 C Db
XNX-AM*E-***** & XNX-AM*-*H****
II 2 (1)G Ex d [ia IIC Ga] IIc T6 (Tamb -40 °C to +65 °C) IP 66
II 2 (1)D Ex tb [ia IIIC Da] IIIC T85 Db

XNX-BT**-*****
UL Classified
Class I, Div. 1 Groups A, B, C & D Class I, Zone 1 Group IIC
Class II, Div. 1 Groups F & G, Class II, Zone 20 & 21
INMETRO TUV 12.1018X
Ex d IIB + H2 T4 Gb IP 66 ≤ -40 ºC ta ≤+65 ºC
Ex d [ia IIC Ga] IIB + H2 T4 Gb IP 66 ≤-40 ºC ta ≤+65 ºC (XNX BT*E-***** & XNX-BT*-*H****)
Ex tb [ia IIC Da] IIIc T85 Db
Ex tb IIIC 85° Db
FM Approvals Listed
AEx D IIB + H2 T6 -40 ºC ≤Tamb ≤65 ºC
AEx D [ia IIC} IIB + H2 T6 -40 ºC≤ Tamb ≤65 ºC (XNX BT*E-***** & XNX-BT*-*H****)

NOTES:
1. The temperature class (T6) is limited to T4 when the MPD sensor is attached locally to the transmitter.
2. XNX EC cartridges and Remote Mount Kit have been evaluated by Underwriters Laboratories (UL) to Canadian National Standards.
3. Peer to peer and multi-drop network (daisy chained) HART, Modbus®, and FoundationTM Fieldbus configurations have not been evaluated by CSA to the requirements of CSA 22:2 No. 152 for Combustible Gas Detection and may be used only for diagnostics and data collection.

Performance Approvals

Communication Options	
Relays	Type: 3 form "C" SPCO contacts for alarm and fault indication. Rating: 250 VAC, 5A/24 VDC, 5A (2 Alarm, 1 Fault) A remote reset is provided to silence alarms. (The Foundation Fieldbus, relay, and Modbus options are mutually exclusive.)
Modbus	Modbus/RTU over RS-485 physical layer. Interface isolated; includes switchable 120 Ohm termination resistor. Baud rates: 1200 to 38,400; 19,200 default. (The Foundation Fieldbus, relay, and Modbus options are mutually exclusive.)
Foundation Fieldbus	H1 Physical Layer. 31.25 kbit/s Manchester encoded signal. AMIS-49200 Fieldbus MAU (media access unit). SPC4-2 Fieldbus Controller. Do not use Fieldbus communication in hazardous areas. The Foundation Fieldbus, Relay, and Modbus options are mutually exclusive.

See Section 6.2 Certifications by Part Number for other approvals

6.2 Sensor Data

6.2.1 Operating and Storage Conditions for Performance Tested EC Cartridges

Gas		Cartridge P/N	Operating Pressure	Operating Air Speed	Warm-up Time (minimum)	Storage Conditions*			
						Temperature	Pressure	Humidity	Time**
O_2	Oxygen	XNXXSO1SS XNXXSO1FM	80 kPa ~ 120 kPa	0 ~ 6 m/sec	60 sec.	0 to 20°C, 32 to 68°F	80 to 120 KPa	5 to 95% RH	6 months
H_2S	Hydrogen Sulfide	XNXXSH1SS XNXXSH1FM	80 kPa ~ 120 kPa	0 ~ 6 m/sec	60 sec.	0 to 20°C, 32 to 68°F	70 to 110 KPa	30 to 70% RH	6 months
H_2S (High)	Hydrogen Sulfide	XNXXSH2SS	80 kPa ~ 120 kPa	0 ~ 6 m/sec	60 sec.	0 to 20°C, 32 to 68°F	70 to 110 KPa	30 to 70% RH	6 months
CO	Carbon Monoxide	XNXXSC1SS XNXXSC1FM	80 kPa ~ 120 kPa	0 ~ 6 m/sec	60 sec.	0 to 20°C, 32 to 68°F	70 to 110 KPa	30 to 70% RH	6 months

*Store in sealed packages **Check cartridge certificates

6.2.2 EC Sensor Performance Data, Factory Mutual Verified (see Section 6.3)

Gas		Cartridge P/N	Selectable Full Scale Range (Display and 4-20mA Full Scale)	Default Range	Range Increments	Lower Alarm Limit	Lower Detection Limit	Lower Explosive Limit (% Vol)	Zero Deviation	Selectable Cal Gas Range	Default Cal Point	Response Time (T50) sec	Response Time (T90) sec	Accuracy	Operating Temperature		Operating Humidity	
															Min	Max	Min	Max
O_2	Oxygen	XNXXSO1FM	n/a	23.0% Vol	n/a	5.0%Vol	5% Vol	n/a	n/a	20.9 %Vol (fixed)	20.9 %Vol	T20 <10	<30	<+/-0.5 %Vol	-30°C / -34°F	55°C /131°F	15% RH	90% RH
H_2S	Hydrogen Sulfide	XNXXSH1FM	10.0 to 50.0 ppm	15.0 ppm	0.1 ppm	5.0 ppm	1.5 ppm	n/a	-2.5 ppm	30 to 70% of the selected full scale range	10 ppm	<20	<30	2 ppm or 10% of reading, whichever is greater	-40°C / -40°F	55°C / 131°F	15% RH	90% RH
CO	Carbon Monoxide	XNXXSC1FM[1]	100 to 1000 ppm	300 ppm	100 ppm	30 ppm	15 ppm	na/	-25 ppm		100 ppm	<15	<30	See footnote 1	-40°C / -40°F	55°C / 131°F	15% RH	90% RH

FOOTNOTES:

1. XNXXSC1FM accuracy over temperature <±10% of reading 20°C/68°F to 55°C/131°F, <±20% of reading 20°C/68°F to -10°C/14°F, <±30% of reading -10°C/14F to -20°C/-4°F. Recalibration is recommended if the temperature of the local environment has varied by more than -30°C.

NOTES:

- Performance figures are measured by test units calibrated at 50% of full scale, at ambient conditions of 20°C, 50% RH, with the EC weatherproof cover attached
- IP rating of FM Cartridges is IP63.
- Barometric pressure effects on the O_2 sensor: The output from the O_2 sensor has pressure effects of <0.1% change of output per % change in pressure. When the barometric pressure changes by ±20% the output from the O_2 sensor changes <±0.4%Vol. However, the oxygen sensor shows transient behavior when subjected to a rapid change in ambient pressure due to either weather or altitude. For example, a 10KPa instantaneous positive pressure step change may cause an overscale alarm condition for a period of about 12 seconds.
- Operating the XNX EC sensor at extended temperature ranges for a prolonged time period exceeding 12 hours my cause deterioration in the sensor performance and shorten sensor life. Extended temperature range for XNX EC sensors is -40°C ot -20°C.
- Response times may increase at lower temperatures.
- FM performance verification is limited to the requirements of the standards identified in Table 6.3 for each cartridge.
- Contact Honeywell Analytics for additional data or details.

6.2.3 EC Sensor Performance Data, DEKRA EXAM verified (see Section 6.3)

Gas		Cartridge P/N	Selectable Full Scale Range (Display and 4-20mA Full Scale)	Default Range	Range Increments	Lower Alarm Limit	Lower Detection Limit	Zero Variation	Selectable Cal Gas Range	Default Cal Point	Response Time (T50) (sec)	T90 Response T10 Recovery Time (sec)	Accuracy[1]	Operating Temperature		Operating Humidity	
														Min	Max	Min	Max
O_2	Oxygen	XNXXSO1SS	n/a	25.0 %Vol	n/a	5.0%Vol	3.5 %Vol	n/a	20.9 %Vol (fixed)	20.9 %Vol	T20 <10	<30	<+/-0.6 %Vol	-30°C / -34°F	55°C /131°F	15% RH	90% RH
H_2S	Hydrogen Sulfide	XNXXSH1SS	10.0 to 50.0 ppm	15.0 ppm	0.1ppm	3.0 ppm	1.0 ppm	2.0 ppm	30 to 70% of the selected full scale range	10 ppm	<20	<30	<+/-0.3 ppm	-40°C / -40°F	55°C / 131°F	15% RH	90% RH
H_2S (High)	Hydrogen Sulfide	XNXXSH2SS	50 to 500 ppm	100 ppm	10 ppm	5 ppm	1 ppm	2 ppm		50 ppm	<20	<30	<+/-5 ppm	-40°C / -40°F	55°C / 131°F	15% RH	90% RH
CO	Carbon Monoxide	XNXXSC1SS	100 to 500 ppm	300 ppm	100 ppm	15 ppm	5 ppm	10 ppm		100 ppm	<15	<30	<+/-2 ppm	-40°C / -40°F	55°C / 131°F	15% RH	90% RH

FOOTNOTE:

1. Accuracy of reading at default Alarm 1 concentration (typically 10% FS or defined minimum alarm level setting, whichever is greater) when operated at default full scale.

NOTES:

- Sensor drift between LDL and negative drift fault limits (typcially > negative zero variation) appear as 0 on the display and outputs of the device.
- Long-term drift: XNXXSC1SS <5%/year, XNXXSO1SS <4%/year, XNXXSH1SS and XNXXSH2SS <2%/month.
- Performance figures are measured by test units calibrated at 50% of full scale, at ambient conditions of 20°C, 50% RH, with the EC weatherproof cover attached.
- Operating the XNX EC sensor at extended temperature ranges for a prolonged time period exceeding 12 hours may cause deterioration in sensor performance and shorten sensor life. Extended temperature ranges for XNX EC sensor cartridges are -40°C to -20°C.
- Barometric pressure effects on the O_2 sensor: The output from the O_2 sensor has pressure effects of <0.1% change of output per % change in pressure. When the barometric pressure changes by ±20%, the output from the O_2 sensor changes <±0.4%Vol. However, the oxygen sensor shows transient behavior when subjected to a rapid change in ambient pressure due to either weather or altitude. For example, a 10KPa instantaneous positive pressure step change may cause an overscale alarm condition for a period of about 12 seconds.
- Response times may increase at lower temperatures.
- Contact Honeywell Analytics for any additional data or details.

6.2.4 Other EC Sensors

Gas		Cartridge P/N	Selectable Full Scale Range (Display and 4-20mA Full Scale)	Default Range	Range Incre-ments	Lower Alarm Limit	Lower Detection Limit	Zero Deviation	Selectable Cal Gas Range	Default Cal Point	Response Time (T50) sec	Response Time (T90) sec	Accuracy[1]	Typical Accuracy @ Lowest Alarm Level	Operating Temperature		Operating Humidity	
															Min	Max	Min	Max
HCl	Hydrogen Chloride	XNXXSR1SS	10.0 to 20.0 ppm	10.0 ppm	1.0 ppm	5.0 ppm	0.6 ppm	-1.0 ppm	30 to 70% of the selected full scale range	5.0 ppm	<45[2, 3]	<150[2, 3]	<+/-1.0 ppm or 20% of applied gas[2, 3]	<+/-1.0 @ 3 ppm	-20°C/-4°F	40°C/104°F	15% RH	90% RH
H_2S (Low)	Hydrogen Sulfide	XNXXSH3SS	n/a	15.0 ppm	n/a	3.0 ppm	1.0 ppm	-2.5 ppm		10 ppm	<20	<40	<+/-0.3 ppm	<+/-0.3 @ 3 ppm	-40°C / -40°F	55°C / 131°F	15% RH	90% RH
SO_2	Sulfur Dioxide	XNXXSS1SS	5.0 to 20.0 ppm	15.0 ppm	5.0 ppm	2.0 ppm	0.6 ppm	-1.0 ppm		5.0 ppm	<15	<30	<+/-0.3 ppm	<+/-0.3 @ 2 ppm	-40°C / -40°F	55°C / 131°F	15% RH	90% RH
SO_2 (High)	Sulfur Dioxide	XNXXSS2SS	20.0 to 50.0 ppm	50.0 ppm	10.0 ppm	5.0 ppm	1.5 ppm	-2.5 ppm		25 ppm	<15	<30	<+/-0.6 ppm	<+/-0.6 @ 5 ppm	-40°C / -40°F	55°C / 131°F	15% RH	90% RH
NH_3	Ammonia	XNXXSA1SS	50 to 200 ppm	200 ppm	50 ppm	20 ppm	6 ppm	-10 ppm		100 ppm	<60	<180	<+/-4 ppm	<+/-4 @ 20 ppm	-20°C / -4°F	40°C / 104°F	15% RH	90% RH
NH_3 (High)	Ammonia	XNXXSA2SS	200 to 1000 ppm	1,000 ppm	50 ppm	100 ppm	30 ppm	-50 ppm		300 ppm	<60	<180	<+/-20 ppm	<+/-20 @ 100 ppm	-20°C / -4°F	40°C / 104°F	15% RH	90% RH
Cl_2	Chlorine	XNXXSL2SS	n/a	5.00 ppm	n/a	0.50 ppm	0.15 ppm	-0.25 ppm		2.0 ppm	<20	<60	<+/-0.2 ppm	<+/-0.20 @ 0.50 ppm	-10°C / 14°F	55°C / 131°F	15% RH	90% RH
Cl_2 (High)	Chlorine	XNXXSL1SS	5.0 to 20.0 ppm	5.0 ppm	5.0 ppm	1.0 ppm	0.6 ppm	-1.0 ppm		2.0 ppm	<20	<30	<+/-0.2 ppm	<+/-0.2 @ 1 ppm	-10°C / 14°F	55°C / 131°F	15% RH	90% RH
ClO_2	Chlorine Dioxide	XNXXSX1SS	n/a	1.00 ppm	n/a	0.10 ppm	0.03 ppm	-0.05 ppm		0.5 ppm	<30	<120	<+/-30%	<+/-0.03 @ 0.1 ppm	-20°C / -4°F	55°C / 131°F	15% RH	90% RH
NO	Nitrogen Monoxide	XNXXSM1SS	n/a	100 ppm	n/a	10 ppm	3 ppm	-5 ppm		50 ppm	<15	<30	<+/-2 ppm	<+/-2.0 @ 10 ppm	-20°C / -4°F	55°C / 131°F	15% RH	90% RH
NO_2	Nitrogen Dioxide	XNXXSN1SS	5.0 to 50.0 ppm	10.0 ppm	5.0 ppm	5.0 ppm	1.5 ppm	-2.5 ppm		5 ppm	<15	<30	<+/-0.2 ppm	<+/-0.2 @ 5 ppm	-20°C / -4°F	55°C / 131°F	15% RH	90% RH
H_2	Hydrogen	XNXXSG1SS	n/a	1,000 ppm	n/a	100 ppm	30 ppm	-50 ppm		500 ppm	<60	<90[2]	<+/-8 ppm	<+/-8 @ 100 ppm	-20°C / -4°F	55°C / 131°F	15% RH	90% RH
H_2 (High)	Hydrogen	XNXXSG2SS	n/a	10,000 ppm	n/a	1000 ppm	300 ppm	-500 ppm		5000 ppm	<15	<30	<+/-150 ppm	<+/-150 @ 1000 ppm	-20°C / -4°F	55°C / 131°F	15% RH	90% RH
HF	Hydrogen Fluoride	XNXXSF1SS	n/a	12.0 ppm	n/a	1.5 ppm	0.4 ppm	-0.6 ppm		5.0 ppm	120	<240	<+/-0.5 ppm	<+/-0.5 @ 1.5 ppm	-20°C / -4°F	55°C / 131°F	20% RH	75% RH
PH_3	Phosphine	XNXXSP1SS	n/a	1.20 ppm	n/a	0.15 ppm	0.04 ppm	-0.06 ppm		0.5ppm	<15	<30	<+/- 0.02 ppm	<+/-0.02 @ 0.15 ppm	-20°C / -4°F	40°C / 104°F	10% RH	90% RH

see footnotes and notes on following page

FOOTNOTES (SEE TABLE ON PREVIOUS PAGE):

1. Accuracy of reading at default Alarm 1 concentration (typically 10%FS or defined minimum alarm level setting, whichever greater) when operated at default full scale.
2. System conditioning may be required to achieve stated results. Contact Honeywell Analytics for details.
3. Measured using calibration flow housing at calibration flow rate (300-375 ml/min) with dry gas.

NOTES (SEE TABLE ON PREVIOUS PAGE):

- Data taken at ambient conditions of 20°C, 50% RH.
- Data represents typical values of freshly calibrated sensors without optional accessories attached.
- Performance figures are measured by test units calibrated at 50% of full scale.
- Standard temperature range for XNX EC Sensors is -20°C to +55°C; ATEX, IECEx.
- Extended temperature ranges for the XNX EC Sensors are -40°C to -20°C
- Accuracy between the temperatures of -40°C and -20°C is ±30% at the applied gas concentration.
- Operating the XNX EC Sensors at extended temperature ranges for a prolonged time period exceeding 12 hours may cause deterioration in sensor performance and shorter sensor life.
- Barometric pressure effects on the O_2 sensor: The output from the O_2 sensor has pressure effects of <0.1% change of output per % change in pressure. When the barometric pressure changes by ±20% the output from the O_2 sensor changes <±0.4%Vol. However, the oxygen sensor shows transient behavior when subjected to a rapid change in ambient pressure due to either weather or altitude. For example, a 10KPa instantaneous positive pressure step change may cause an overscale alarm condition for a period of about 12 seconds.
- Recalibration is recommended if the temperature of local environment has varied by more than ±15°C from the temperature of calibration.
- Response times may increase at lower temperatures.
- Contact Honeywell Analytics for any additional data or details.

6.2.5 XNX EC Sensor Cross-sensitivity

Gas type	Part Number	Gas Type Applied	Concentration	Unit	Reading	Unit
O_2	XNXXS01SS XNXXS01FM	Carbon Dioxide	5	%vol	0.1	%vol (change O_2 reading) per %vol CO_2
HCl	XNXXSR1SS	Carbon monoxide	2000	ppm	0	ppm HCl
		Hydrogen	20000		0	
		Chlorine	5		5.6	
		Nitrogen dioxide	5		0.9	
		Propan-2-ol	500		0	
		Methanol	500		0	
		Hydrogen fluoride	5		6.7	
		Hydrogen suflfide	25		-3.6	
		Sulphur dioxide	50		22.4	
		Arsine	1		0	
		Phosphine	1		-0.14	
		Diborane	1		-1.3	
H_2S (Low Range)	XNXXSH3SS	Ammonia	50	ppm	0	ppm H_2S
		Carbon Monoxide	100		<2	ppm H_2S
		Carbon Dioxide	5000		0	ppm H_2S
		Chlorine	0.5		0	ppm H_2S
		Ethylene	100		0	ppm H_2S
		Hydrogen	100		0	ppm H_2S
		Hydrogen Sulfide	10		10	ppm H_2S
		Nitrogen Monoxide	25		0	ppm H_2S
		Nitrogen Dioxide	3		0	ppm H_2S
		Sulfur Dioxide	2		0	ppm H_2S

Gas type	Part Number	Gas Type Applied	Concentration	Unit	Reading	Unit
H_2S	XNXXSH1SS XNXXSH1FM	Ammonia	50	ppm	0	ppm H_2S
		Carbon Monoxide	100		<2	ppm H_2S
		Carbon Dioxide	5000		0	ppm H_2S
		Chlorine	0.5		0	ppm H_2S
		Ethylene	100		0	ppm H_2S
		Hydrogen	100		0	ppm H_2S
		Hydrogen Sulfide	10		10	ppm H_2S
		Nitrogen Monoxide	25		0	ppm H_2S
		Nitrogen Dioxide	3		0	ppm H_2S
		Sulfur Dioxide	2		0	ppm H_2S
H_2S (High Range)	XNXXSH2SS	Ammonia	50	ppm	0	ppm H_2S
		Carbon Monoxide	100		<2	ppm H_2S
		Carbon Dioxide	5000		0	ppm H_2S
		Chlorine	0.5		0	ppm H_2S
		Ethylene	100		0	ppm H_2S
		Hydrogen	100		0	ppm H_2S
		Hydrogen Sulfide	10		10	ppm H_2S
		Nitrogen Monoxide	25		0	ppm H_2S
		Nitrogen Dioxide	3		0	ppm H_2S
		Sulfur Dioxide	2		0	ppm H_2S

Gas type	Part Number	Gas Type Applied	Concentration	Unit	Reading	Unit
CO	XNXXSC1SS XNXXSC1FM	Acetone	1000	ppm	0	ppm CO
		Acetylene	40		80	ppm CO
		Ammonia	100		0	ppm CO
		Carbon Monoxide	100		100	ppm CO
		Chlorine	2		0	ppm CO
		Ethanol	2000		3	ppm CO
		Ethylene	100		85	ppm CO
		Hydrogen	100		20	ppm CO
		Hydrogen Sulfide	25		0	ppm CO
		Iso-Propanol	200		0	ppm CO
		Nitrogen Monoxide	50		8	ppm CO
		Nitrogen Dioxide	800		20	ppm CO
		Sulfur Dioxide	50		0.5	ppm CO
SO_2	XNXXSS1SS	Carbon Monoxide	300	ppm	<3	ppm SO_2
		Hydrogen Sulfide	15		0	ppm SO_2
		Nitrogen Monoxide	35		0	ppm SO_2
		Nitrogen Dioxide	5		~-5	ppm SO_2
SO_2	XNXXSS2SS	Carbon Monoxide	300	ppm	<3	ppm SO_2
		Hydrogen Sulfide	15		0	ppm SO_2
		Nitrogen Monoxide	35		0	ppm SO_2
		Nitrogen Dioxide	5		~-5	ppm SO_2

Gas type	Part Number	Gas Type Applied	Concentration	Unit	Reading	Unit
NH_3	XNXXSA1SS	Alcohols	1000	ppm	0	ppm NH_3
		Carbon Dioxide	5000		0	ppm NH_3
		Carbon Monoxide	100		0	ppm NH_3
		Hydrocarbons		% range	0	ppm NH_3
		Hydrogen	10000	ppm	0	ppm NH_3
		Hydrogen Sulfide	20		2	ppm NH_3
NH_3 (High Range)	XNXXSA2SS	Alcohols	1000	ppm	0	ppm NH_3
		Carbon Monoxide	100		0	ppm NH_3
		Chlorine	5		0	ppm NH_3
		Nitrogen Dioxide	10		0	ppm NH_3
		Sulfur Dioxide	20		-40	ppm NH_3
		Hydrogen	3000		0	ppm NH_3
		Hydrogen Sulfide	20		20	ppm NH_3
Cl_2	XNXXSL2SS	Carbon Dioxide	20000	ppm	0	ppm Cl_2
		Hydrogen Chloride	9		1.25	ppm Cl_2
		Hydrogen Sulfide	25		-16.3	ppm Cl_2
		Nitrogen Dioxide	50		1.25 (transient)	ppm Cl_2
		Sulfur Dioxide	50		9.1	ppm Cl_2
Cl_2 (High Range)	XNXXSL1SS	Carbon Dioxide	20000	ppm	0	ppm Cl_2
		Hydrogen Chloride	9		1.25	ppm Cl_2
		Hydrogen Sulfide	25		-16.3	ppm Cl_2
		Nitrogen Dioxide	50		1.25 (transient)	ppm Cl_2
		Sulfur Dioxide	50		9.1	ppm Cl_2
ClO_2	XNXXSX1SS	Refer To Cl2	Refer to Cl_2	Refer to Cl_2	Refer to Cl_2	Refer to Cl_2

Gas type	Part Number	Gas Type Applied	Concentration	Unit	Reading	Unit
NO	XNXXSM1SS	Carbon Monoxide	300	ppm	0	ppm NO
		Sulfur Dioxide	5		0	ppm NO
		Nitrogen Dioxide	5		<1.5	ppm NO
		Hydrogen Sulfide	15		~1.5	ppm NO
NO_2	XNXXSN1SS	Carbon Monoxide	300	ppm	0	ppm NO_2
		Hydrogen Sulfide	15		~ -1.2	ppm NO_2
		Sulfur Dioxide	5		0	ppm NO_2
		Nitrogen Monoxide	35		0	ppm NO_2
		Chlorine	1		~1	ppm NO_2
H_2	XNXXSG1SS	Carbon Monoxide	300	ppm	≤ 60	ppm H_2
		Hydrogen Sulfide	15		<3	ppm H_2
		Sulfur Dioxide	5		0	ppm H_2
		Nitrogen Monoxide	35		»10	ppm H_2
		Nitrogen Dioxide	5		0	ppm H_2
		Chlorine	1		0	ppm H_2
		Hydrogen Cyanide	10		»3	ppm H_2
		Hydrogen Chloride	5		0	ppm H_2
		Ethylene	100		»80	ppm H_2

Gas type	Part Number	Gas Type Applied	Concentration	Unit	Reading	Unit
H_2 (High Range)	XNXXSG2SS	Ammonia	100	ppm	0	ppm H_2
		Arsine	0.2	ppm	0	ppm H_2
		Carbon Dioxide	1000	ppm	0	ppm H_2
		Carbon Monoxide	100	ppm	150	ppm H_2
		Chlorine	1	ppm	0	ppm H_2
		Ethylene	500	ppm	yes; n/d	ppm H_2
		Hydrogen Cyanide	20	ppm	0	ppm H_2
		Hydrogen Sulfide	20	ppm	4	ppm H_2
		Iso-Propanol	1100	ppm	yes; n/d	ppm H_2
		Methane	1	%	0	ppm H_2
		Nitrogen Dioxide	10	ppm	-40	ppm H_2
		Ozone	0.25	ppm	0	ppm H_2
		Sulfur Dioxide	5	ppm	0	ppm H_2
HF	XNXXSF1SS	Carbon Monoxide	2000	ppm	0	ppm HF
		Hydrogen	20000	ppm	0	ppm HF
		Chlorine	5	ppm	5.8	ppm HF
		Nitrogen Dioxide	5	ppm	0.65	ppm HF
		Iso-Propanol	500	ppm	0	ppm HF
		Methanol	500	ppm	0	ppm HF
		Hydrogen Fluoride	5	ppm	7	ppm HF
		Hydrogen Sulfide	25	ppm	-3.6	ppm HF
		Sulfur Dioxide	50	ppm	28.3	ppm HF
		Arsine	1	ppm	0	ppm HF
		Phosphine	1	ppm	-0.14	ppm HF
		Diborane	1	ppm	-1.3	ppm HF

Gas type	Part Number	Gas Type Applied	Concentration	Unit	Reading	Unit
PH_3	XNXXSP1SS	Carbon Monoxide	2000	ppm	<10	ppm PH_3
		Hydrogen	5000	ppm	<10	ppm PH_3
		Chlorine	1	ppm	-70	ppm PH_3
		Nitrogen Dioxide	8	ppm	-860	ppm PH_3
		Ethanol	2000	ppm	<10	ppm PH_3
		Iso-Propanol	1000	ppm	<10	ppm PH_3
		Hydrogen Chloride	10	ppm	<10	ppm PH_3
		Hydrogen Fluoride	10	ppm	<10	ppm PH_3
		Hydrogen Sulfide	0.5	ppm	70	ppm PH_3
		Ammonia	100	ppm	1050 (transient)	ppm PH_3
		Sulfur Dioxide	50	ppm	550 (transient)	ppm PH_3
		Silane	1	ppm	364	ppm PH_3
		Arsine	1	ppm	680	ppm PH_3
		Diborane	1	ppm	454	ppm PH_3
		Germane	1	ppm	454	ppm PH_3

NOTES:

- The figures of cross-sensitivity are typical values and should not be used as a basis for cross calibration.
- Cross-sensitivities may not be linear and should not be scaled.
- For some cross-interferents breakthrough may occur if gas is applied a longer time period.
- There are many gases and vapors that can poison electochemical cells. It is difficult to give a complete and exclusive list of all species which will have an effect on the sensors. However, these are some common substances which should be avoided:
- Airborne greases - These may block gas access into the sensors and therefore reduce sensitivity.
- Silicone compounds - These are often found in sprays, aerosols, lubricants, polishes, adhesives, sealants, zebra strip, cleaning agents, and floor waxes. These compounds tend to reduce the sensitivity of the sensors and generally will have a permanent effect.
- Solvents and organic vapors - Many organic vapors will damage the sensors. Some common ones are IPA, toluene, xylene, other benzine derivatives, petrol, and diesel. It is difficult to give a full list of organic vapors, as there are so many of them. Generally, any organic vapor should be avoided.

6.2.6 XNX MPD Sensor Performance Data

Sensor Type	Gas	Typical Response Time (T50) sec	Typical Response Time (T90) sec	Maximum Range	Accuracy (% of full scale or % of applied gas)	Drift Over Time	Operating Humidity	Operating Temperature		Operating Pressure	Operating Air Speed
								Min	Max		
MPD-IC1	Carbon Dioxide	<30	<70	5.00 %Vol	±5%FS or ±15%	< 3%/yr	0-95% RH non-condensing	-20°C / -4°F	+50°C / 122°F	80kPa ~ 110kPa	0 ~ 6m/sec
MPD-IV1	Methane	<15	<30	5.00 %Vol	±5%FS or ±15%	< 3%/yr		-20°C / -4°F	+50°C / 122°F	80kPa ~ 110kPa	0 ~ 6m/sec
MPD-IF1	Propane	<15	<30	100 %LEL	±5%FS or ±15%	< 3%/yr		-20°C / -4°F	+50°C / 122°F	80kPa ~ 110kPa	0 ~ 6m/sec
MPD-CB1	Propane	<15	<30	100 %LEL	±5%FS or ±15%	< 3%/yr		-40°C / -40°F	+65°C / 149°F	80kPa ~ 120kPa	0 ~ 6m/sec
	Methane	<10	<30								
	Hydrogen	<10	<30								
	Butane-2	<15	<40								
	Nonane	<20	<50								

NOTES:

- Response times may vary depending upon molecular weight, size, and structure.
- CSA approved hydrogen sensors are MPDUT-CB1 and 705 STD.
- DEKRA EXAM approved sensors are MPDAM CB1 and SPHT
- Data taken at 20-25°C. Contact Honeywell Analytics for additional data or details.
- Response times may increase at lower temperatures.
- Data represents typical values without optional accessories attached.
- System conditioning may be required to achieve stated results. Contact Honeywell Analytics for details.
- Performance figures are measured using a sample humidity of 50% RH.
- Performance figures are measured between 40 and 60% of full scale.
- Performance figures are measured by test units calibrated at 50% of full scale.
- Use of the weatherproof cap will increase response times.
- FM 6340 performance approval based on MPD-IC1 with SPXCDWP T50<60 T90<150.
- Use of the weatherproof cap will increase response times.
- FM 6340 performance approval based on MPD-IC1 with SPXCDWP T50<60 T90<150.

6.2.7 EN60079-29-1 Performance Approved Gases for mV Sensor Types

Sensor Type	EN60079-29-1 Reference	Verified Gas Selections					
		Hydrogen	Methane-2	Propane-2	Butane-2	Star 2	Star 4
MPD AMCB1	Standard Test Gas		●	●			
	Other Gases	●			●	n-nonane	
SP-HT	Standard Test Gas		●	●			
	Other Gases	●			●		n-nonane
Max Zero Deviation (see note 1)		-7% LEL				-9% LEL	-7% LEL
LDL (see note 2)		3% LEL				5% LEL	3% LEL

NOTES:

1. Readings < 0% LEL are not displayed or indicated on the 20 mA output. Values exceeding the zero deviation limit will result in F111 faults.
2. Readings < LDL are shown as 0% on the display and 20 mA output.

6.2.8 Other Sensor Performance Data

Performance data for other supported sensors is available in their respective technical manuals.

6.3 XNX Certifications by Part Number Series

Contact Honeywell Analytics for information about approvals not shown in this section.

XNX Certifications XNX-UT Series

XNX Part Number Series			XNX Transmitter IR Personality			XNX Transmitter mV Personality								XNX Transmitter EC Personality				Options			
			XNX-UTSI-***** XNX-UTAI-*****			XNX-UTSV-***** / XNX-UTAV-*****								XNX-UTSE-***** / XNX-UTAE-*****							
			With Generic 20 mA Input	With Optima Plus	With Searchline Excel	MPD-UTCB1 (Cat Bead)	MPD-UTIV1 (IR Methane)	MPD-UTIF1 (IR Flam)	MPD-UTIC1 (IR CO_2)	with 705	with Sensepoint	with Sensepoint PPM	with Sensepoint HT	With XNXXSO1FM O_2 Cartrdige	With XNXXSH1FM H_2S Cartridge	With XNXXSC1FM CO Cartridge	SO_2, NH_3, Cl_2, ClO_2, NO, NO_2, H_2 PPM HCL, HCN, HF, O_3, PH_3	Modbus	Relays	Local HART	Foundation Fieldbus
C-UL Classified For Hazardous Locations		UL 1203	T	T	T	T	T	T	T	T	N/A	N/A	N/A	T	T	T	T	T	T	T	T
		UL 913-7th Edition	N/A	N/A	N/A	N/A	N/A	N/A	N/A	N/A	N/A	N/A	N/A	T	T	T	T	N/A	N/A	T	N/A
CSA	Hazardous Location	CAN/CSA C22.2 No. 30 M-1986	T	T	T	T	N/A	N/A	T	T	N/A	N/A	N/A	T	T	T	T	T	T	T	N/A
		CAN/CSA C22.2 No. 157-92 (Applies to Local HART Option and/or EC Adaptors)	N/A	N/A	N/A	N/A	N/A	N/A	N/A	N/A	N/A	N/A	N/A	T	T	T	T	N/A	N/A	T	N/A
	Performance	CSA C22.2 No. 152	N/A	T	N/A	T	N/A	N/A	N/A	T	N/A	N/A	N/A	N/A	N/A	N/A	N/A	T	T	T	T
FM Listed	US Toxic Performance	Standard referenced in notes 1, 2, 3	N/A	N/A	N/A	N/A	N/A	N/A	3	N/A	N/A	N/A	N/A	1	2	3	N/A	T	T	T	T
	Flammable Performance	FM 6310 / 6320	N/A	T	N/A	T	N/A	N/A	N/A	T	N/A	N/A	N/A	N/A	N/A	N/A	N/A	T	T	T	T
		FM 6325	N/A	N/A	T	N/A	N/A	N/A	N/A	N/A	N/A	N/A	N/A	N/A	N/A	N/A	N/A	T	T	T	T
	Toxic Gas Detector	FM 6340	N/A	N/A	N/A	N/A	N/A	N/A	T	N/A	N/A	N/A	N/A	N/A	N/A	N/A	N/A	T	T	T	T
T = 3/4 NPT threaded Transmitters & Adapters N/A = Not Applicable		**1. ANSI/ISA 92.04.01, Part 1 2007 2. ISA 92.0.01, Part 3 1998 3. FM 6340**																			

XNX Certifications by XNX-AM Series

XNX Part Number Series		XNX Transmitter IR Personality			XNX Transmitter mV Personality								XNX Transmitter EC Personality						Options			
		XNX-AMSI-***** XNX-AMAI-*****			XNX-AMSV-***** / XNX-AMAV-*****								XNX-AMSE-***** / XNX-AMAE-*****									
		With Generic 20 mA Input	With Optima Plus	With Searchline Excel	MPD-AMCB1 (Cat Bead)	MPD-AMIV1 (IR Methane)	MPD-AMIF1 (IR Flam)	MPD-AMIC1 (IR CO_2)	With 705 HT	With Sensepoint	With Sensepoint PPM	With Sensepoint HT	With Oxygen Cartrdige	With H_2S Low Cartridge	With H_2S Med Cartridge	With H_2S High Cartridge	With CO Cartridge	SO_2, NH_3, Cl_2, ClO_2, NO, NO_2, H_2 PPM HCL, HCN, HF, O_3, PH_3	Modbus	Relays	Local HART	Foundation Fieldbus
Electromagnetic & Safety; CE Mark EMC Compliance	EU directive 2004/108/EC	M	M	M	M	M	M	M	M	M	M	M	M	M	M	M	M	M	M	M	M	M
	EN 50270:2006	B	B	B	B	B	B	B	B	B	B	B	B	B	B	B	B	B	B	B	B	B
	EU directive 94/9/EC	M	M	M	M	M	M	M	M	M	M	M	M	M	M	M	M	M	M	M	M	M
Hazardous Location --- ATEX/DEMKO IECEx	EN 60079-29-0: 2009	M	M	M	M	M	M	M	N/A	M	M	M	M	M	M	M	M	M	M	M	M	M
	EN 60079-29-1: 2007	M	M	M	M	M	M	M	N/A	M	M	M	M	M	M	M	M	M	M	M	M	M
	EN 60079-11: 2012	N/A	N/A	N/A	N/A	N/A	N/A	N/A	N/A	N/A	N/A	N/A	M	M	M	M	M	M	N/A	N/A	M	N/A
	EN 60079-26: 2007	N/A	N/A	N/A	N/A	N/A	N/A	N/A	N/A	N/A	N/A	N/A	M	M	M	M	M	M	N/A	N/A	N/A	N/A
	IEC 60079-31 1st Ed	M	M	M	M	M	M	M	N/A	N/A	N/A	M	M	M	M	M	M	M	M	M	M	M
	IEC 60079-0 6th Ed	M	M	M	M	M	M	M	N/A	M	M	M	M	M	M	M	M	M	M	M	M	M
	IEC 60079-1 6th Ed	M	M	M	M	M	M	M	N/A	M	M	M	M	M	M	M	M	M	M	M	M	M
	IEC 60079-11 6th Ed	N/A	N/A	N/A	N/A	N/A	N/A	N/A	N/A	N/A	N/A	N/A	M	M	M	M	M	M	N/A	N/A	M	M
	IEC 60079-26 2nd Ed	N/A	N/A	N/A	N/A	N/A	N/A	N/A	N/A	N/A	N/A	N/A	M_1	M_1	M_1	M_1	M_1	M_1	N/A	N/A	N/A	N/A
	EN 60079-31: 2009	M	M	M	M	M	M	M	N/A	N/A	N/A	M	M	M	M	M	M	M	M	M	M	M

B = Both 3/4 NPT and M25
M = M25 threaded Transmitters & Adapters
M_1 = When used with S3KRMK in a Zone 0 location
N/A = Not Applicable

XNX Certifications XNX-AM Series

XNX Part Number Series		XNX Transmitter IR Personality			XNX Transmitter mV Personality								XNX Transmitter EC Personality					Options			
		XNX-AMSI-***** XNX-AMAI-*****			XNX-AMSV-***** / XNX-AMAV-*****								XNX-AMSE-***** / XNX-AMAE-*****								
		With Generic 20 mA Input	With Optima Plus	With Searchline Excel	MPD-AMCB1 (Cat Bead)*	MPD-AMIV1 (IR Methane)	MPD-AMIF1 (IR Flam)	MPD-AMIC1 (IR CO_2)	With 705 HT	With Sensepoint	With Sensepoint PPM	With Sensepoint HT*	With XNXXSO1SS O_2 Cartrdige	With XNXXSH1SS H_2S Cartridge	With XNXXSH2SS H_2S Cartridge	With XNXXSC1SS CO Cartridge	SO_2, NH_3, Cl_2, ClO_2, NO, NO_2, H_2 PPM HCL, HCN, HF, O_3, PH_3	Modbus	Relays	Local HART	Foundation Fieldbus
Performance* EXAM DEKRA GmbH	IEC 60079-29-1:2007*** EN 60079-29-1:2007***	N/A	M	N/A	M	N/A	N/A	N/A	N/A	N/A	N/A	M	N/A	N/A	N/A	N/A	N/A	N/A	M	M	N/A
	EN 45544:1999	N/A	N/A	N/A	N/A	N/A	N/A	N/A	N/A	N/A	N/A	N/A	N/A	M	M	M	N/A	N/A	M	M	N/A
	EN 50104:2010**	N/A	N/A	N/A	N/A	N/A	N/A	N/A	N/A	N/A	N/A	N/A	M	N/A	N/A	N/A	N/A	N/A	M	M	N/A
	EN 50271:2010	N/A	M	N/A	M	N/A	N/A	N/A	N/A	N/A	N/A	M	M	M	M	M	N/A	N/A	M	M	N/A
TÜV Rhineland	IEC61508	B	B	B	N/A	N/A	N/A	N/A	B	B	B	B	B	B	B	B	B	N/A	N/A	N/A	N/A
	EN 50402	B	B	B	N/A	N/A	N/A	N/A	B	B	B	B	B	B	B	B	B	N/A	N/A	N/A	N/A

Delays resulting from transmission errors between sensor and transmitter extend response times T90 by more than one-third. The period until fault indication is 10 seconds.
M = M25 threaded Transmitters & Adapters
B = Both XNX-UT**-***** 3/4"NPT and XNX-AM**-***** transmitters
N/A = Not Applicable
*Tested components: handheld in point-to-point mode, weatherproof cap (not used for calibration), calibration mask.
**Tested applications: oxygen deficiency and oxygen enrichment
*** Tested gases: methane-2, butane-2, propane-2, hydrogen, n-nonane

XNX Certifications - MPD-BT**.***** Part Number Series

XNX Part Number Series		XNX Transmitter IR Personality			XNX Transmitter mV Personality					XNX Transmitter EC Personality					Options			
		XNX-BTSI-***** XNX-BTAI-*****			XNX-BTSV-***** XNX-BTAV-*****					XNX-BTSE-***** XNX-BTAE-*****								
		With Generic 20 mA Input	With Optima Plus	With Searchline Excel	MPD-BTCB1 (Cat Bead)	MPD-BTIV1 (IR Methane)	MPD-BTIF1 (IR Flam)	MPD-BTIC1 (IR CO2)	with 705 HT	With XNXXSO1FM O_2 Cartrdige	With XNXXSH1FM H_2S Cartridge	With XNXXSC1FM CO Cartridge	SO_2, NH_3, CL_2, ClO_2, NO, NO_2, H_2 PPM HCL, HCN, HF, O_3, PH_3	Modbus	Relays	Local HART	FOUNDATION Field Bus
UL Classified	UL 1203	T	T	T	T	T	T	T	T	T	T	T	T	T	T	T	T	T
	UL 913-7th Edition Applies to Local HART Option)	N/A	N/A	N/A	N/A	N/A	N/A	N/A	N/A	T	T	T	T	N/A	N/A	T	N/A
INMETRO TÜV Rheinland	ABNT NBR IEC 60079-0:2008	B	B	B	B	B	B	B	B	B	B	B	B	B	B	B	B	B
	ABNT NBR IEC 60079-1:2009	B	B	B	B	B	B	B	B	B	B	B	B	B	B	B	B	B
	ABNT NBR IEC 60079-11:2013	N/A	N/A	N/A	N/A	N/A	N/A	N/A	N/A	B	B	B	B	N/A	N/A	T	N/A
	ABNT NBR IEC 60079-26:2008	B	B	B	B	B	B	B	B	B	B	B	B	B	B	B	B	B
	ABNT NBR IEC 60079-31:2014	B	B	B	B	B	B	B	B	B	B	B	B	B	B	B	B	B
	Portar:a INMETRO n°179 de 18/05/2010	B	B	B	B	B	B	B	B	B	B	B	B	B	B	B	B	B
	ABNT NBR IEC 60529-:2009	T	T	T	T	T	T	T	T	T	T	T	T	T	T	T	T	T
FM Listed	Standard referenced in notes 1, 2, 3	N/A	N/A	N/A	N/A	N/A	N/A	3	N/A	1	2	3	N/A	T	T	T	T	T
	FM 6310 / 6320	N/A	T	N/A	T	N/A	N/A	N/A	T	N/A	N/A	N/A	N/A	T	T	T	T	T
	FM 6325	N/A	N/A	T	N/A	N/A	N/A	N/A	N/A	N/A	N/A	N/A	N/A	T	T	T	T	T
	FM 6340	N/A	N/A	N/A	N/A	N/A	N/A	T	N/A	N/A	N/A	N/A	N/A	T	T	T	T	T

T = 3/4 NPT threaded Transmitters & Adapters
N/A = Not Applicable

1. ANSI/ISA 92.04.01, Part 1 2007
2. ISA 92.0.01, Part 3 1998
3. FM 6340

6..3.1 Certification Labels

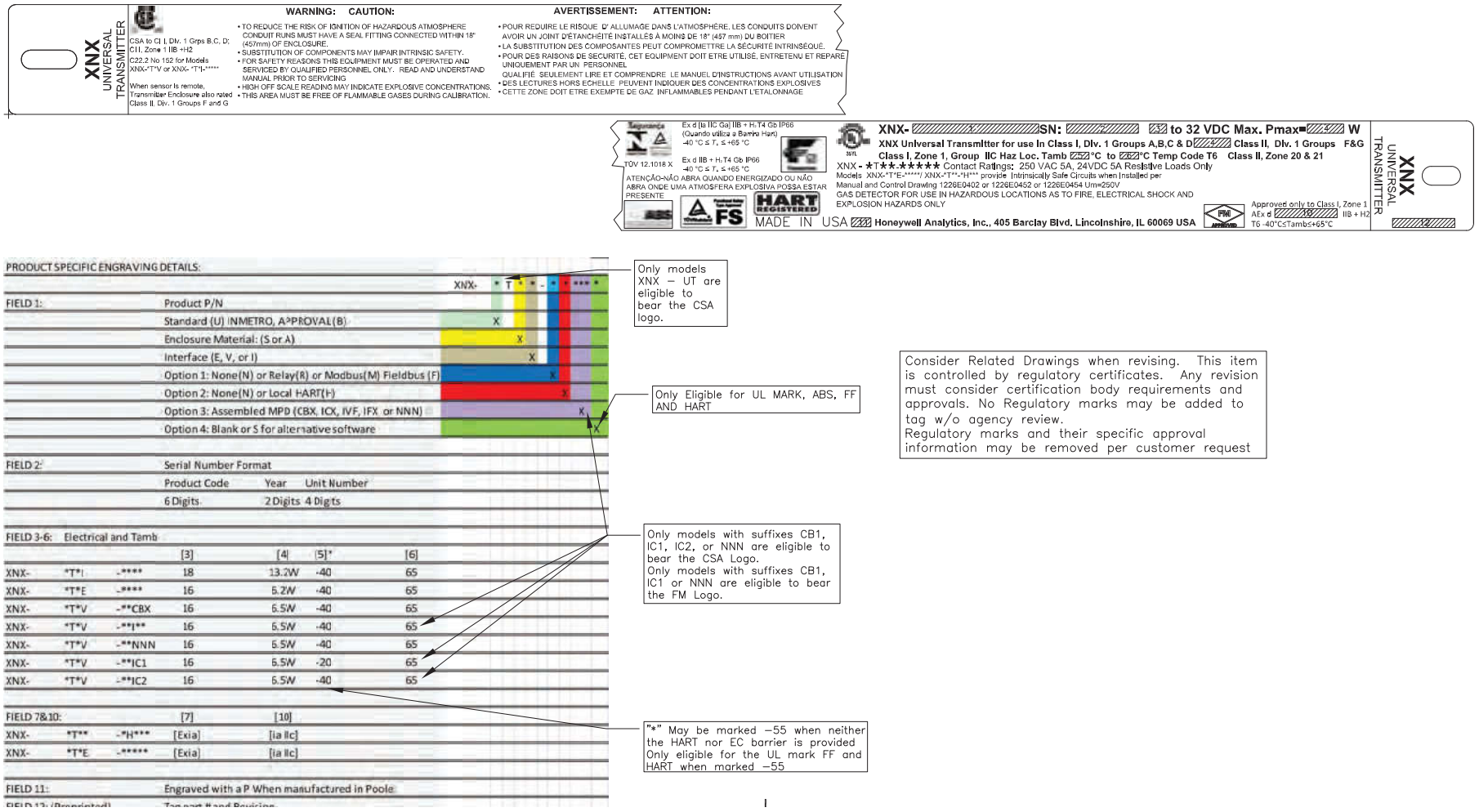

PRODUCT SPECIFIC ENGRAVING DETAILS:

		XNX- * T * * - * * *** *
FIELD 1:	Product P/N	
	Standard (U) INMETRO, APPROVAL(B)	X
	Enclosure Material: (S or A)	X
	Interface (E, V, or I)	X
	Option 1: None(N) or Relay(R) or Modbus(M) Fieldbus (F)	X
	Option 2: None(N) or Local HART(H)	X
	Option 3: Assembled MPD (CBX, ICX, IVF, IFX or NNN)	X
	Option 4: Blank or S for alternative software	X

FIELD 2:	Serial Number Format		
	Product Code	Year	Unit Number
	6 Digits	2 Digits	4 Digits

FIELD 3-6: Electrical and Tamb						
			[3]	[4]	[5]*	[6]
XNX-	*T*I	-****	18	13.2W	-40	65
XNX-	*T*E	-****	16	5.2W	-40	65
XNX-	*T*V	-**CBX	16	5.5W	-40	65
XNX-	*T*V	-**I**	16	5.5W	-40	65
XNX-	*T*V	-**NNN	16	5.5W	-40	65
XNX-	*T*V	-**IC1	16	5.5W	-20	65
XNX-	*T*V	-**IC2	16	5.5W	-40	65

FIELD 7&10:			[7]	[10]
XNX-	*T**	-*H***	[Exia]	[ia IIc]
XNX-	*T*E	-*****	[Exia]	[ia IIc]

FIELD 11:	Engraved with a P When manufactured in Poole
FIELD 12: (Preprinted)	Two part # and Revision

Only models XNX – UT are eligible to bear the CSA logo.

Only Eligible for UL MARK, ABS, FF AND HART

Only models with suffixes CB1, IC1, IC2, or NNN are eligible to bear the CSA Logo.
Only models with suffixes CB1, IC1 or NNN are eligible to bear the FM Logo.

"*" May be marked –55 when neither the HART nor EC barrier is provided
Only eligible for the UL mark FF and HART when marked –55

Consider Related Drawings when revising. This item is controlled by regulatory certificates. Any revision must consider certification body requirements and approvals. No Regulatory marks may be added to tag w/o agency review.
Regulatory marks and their specific approval information may be removed per customer request

Figure 229. XNX-UT**-***** configuration

Certification Labels



Figure 230. XNX-AM**-***** Configuration

6.4 Product Identification

6.4.1 XNX Universal Transmitter

The XNX part numbering system contains all of the information necessary to convey the product configuration, including options. Agency, port thread, enclosure material, and sensor personality define the standard unit. Three option fields define optional relay or fieldbus interfaces and factory installed local HART. The sensor and range field is used exclusively by millivolt units to assemble the defined MPD sensor type and corresponding thread to the transmitter. Agency approvals of the MPD sensor are unique by device and part number. Ensure that the approvals of both the transmitter and the MPD sensor meet the requirements of the installation.

	Enclosure Options (See Section 6.2 for Agency Approvals)									
	Model	Port Thread	Material	Sensor		Interface Option	Local HART	MPD Type Installed		
XNX -	▼	▼	▼	▼	-	▼	▼	▼	▼	▼
	AM - A	M25	Painted LM25 Aluminum	**E** - Electrochem		**N** - None	**N** - None	**NNN** - None		
	AM - S	M25	Painted 316 Stainless Steel	**I** - Infrared		**R** - Relay	**H** - Local HART	**CB1** - MPD-CB1 (Catalytic Bead %LEL)[1]		
	UT - A	3/4 " NPT	Painted LM25 Aluminum	**V** - Millivolt		**M** - Modbus		**IF1** - MPD-IF1 (IR %LEL Flam)[1]		
	UT - S	3/4 " NPT	Painted 316 Stainless Steel			**F** - Foundation Fieldbus		**IV1** - MPD-IV1 (IR CH4 0-5% Vol)[1]		
	BT - A	3/4 " NPT	Painted LM25 Aluminum					**IC1** - MPD-IC1 (IR CO_2 0-5% Vol)[1]		
	BT - S	3/4 " NPT	Painted 316 Stainless Steel							

6.4.2 XNX EC Replacement Sensors

XNX ID	Target Gas		Cartridge Part No	Maximum Range	Selectable Range	Increment	Default Range	Cal Gas Range	Cal Gas P/N	Cal Gas Description
1	O_2	Oxygen	XNXXS01SS	25.0 %Vol	N/A	N/A	25.0 %Vol	20.9 %Vol	N/A	N/A
			XNXXSO1FM	23.0% Vol			23.0% Vol			
2	H_2S	Hydrogen Sulfide (Low Range)	XNXXSH3SS	15.0 ppm	N/A	N/A	15.0 ppm	5.0 to 10.0 ppm	GFV263	10 ppm H_2S
3	H_2S	Hydrogen Sulfide	XNXXSH1SS XNXXSH1FM	50.0 ppm	10.0 to 50.0 ppm	0.1 ppm	15.0 ppm	3 to 35 ppm	GFV258	25 ppm H_2S
4	H_2S	Hydrogen Sulfide (High Range)	XNXXSH2SS	500 ppm	50 to 500 ppm	10 ppm	100 ppm	15 to 350 ppm	GFV421	50 ppm H_2S
5	CO	Carbon Monoxide	XNXXSC1SS	1,000 ppm	100 to 500 ppm	100 ppm	300 ppm	30 to 200 ppm	GFV295	100 ppm CO
			XNXXSC1FM		100 to 1,000 ppm					
6	SO_2	Sulfur Dioxide	XNXXSS1SS	20.0 ppm	5.0 to 20.0 ppm	5.0 ppm	15.0 ppm	2 to 14 ppm	Contact HA	7.5 ppm SO_2
7	SO_2	Sulfur Dioxide (High Range)	XNXXSS2SS	50.0 ppm	20.0 to 50.0 ppm	10 ppm	50.0 ppm	6 to 35 ppm	GFV441	25 ppm SO_2
8	NH_3	Ammonia	XNXXSA1SS	200 ppm	50 to 200 ppm	50 ppm	200 ppm	150 to 140 ppm	Contact HA	100 ppm NH_3
9	NH_3	Ammonia (High Range)	XNXXSA2SS	1000 ppm	200 to 1,000 ppm	50 ppm	1,000 ppm	60 to 700 ppm	Contact HA	300 ppm NH_3
10	Cl_2	Chlorine	XNXXSL2SS	5.00 ppm	N/A	N/A	5.00 ppm	2 to 3 ppm	GFV251	2 ppm Cl_2 in N_2
11	Cl_2	Chlorine (High Range)	XNXXSL1SS	20.0 ppm	5.0 to 20.0 ppm	5.0 ppm	5.0 ppm	2 to 14 ppm	GFV251	2 ppm Cl_2 in N_2
12	ClO_2	Chlorine Dioxide	XNXXSX1SS	1.00 ppm	N/A	N/A	1.00 ppm	0.3 to 0.7 ppm	Gas Generator	0.5 ppm
13	NO	Nitrogen Monoxide	XNXXSM1SS	100 ppm	N/A	N/A	100 ppm	30 to 70 ppm	GFV216	50 ppm NO in N_2
14	NO_2	Nitrogen Dioxide	XNXXSN1SS	50.0 ppm	5.0 to 50.0 ppm	5.0 ppm	10.0 ppm	2 to 35 ppm	GFV435	5 ppm NO_2
15	H_2	Hydrogen	XNXXSG1SS	1000 ppm	N/A	N/A	1,000 ppm	300 to 700 ppm	GFV364	500 ppm H_2
16	H_2	Hydrogen (High Range)	XNXXSG2SS	10,000 ppm	N/A	N/A	10,000 ppm	3,000 to 7,000 ppm	Contact HA	5000 ppm H_2 in N_2
17	HCl	Hydrogen Chloride	XNXXSR1SS	20.0 ppm	10.0 to 20.0 ppm	1.0 ppm	10.0 ppm	4 to 12 ppm	Contact HA	5 ppm HCl in N2
19	HF	Hydrogen Fluoride	XNXXSF1SS	12.0 ppm	N/A	N/A	12.0 ppm	4 to 8 ppm	Contact HA	5 ppm HF in N_2
21	PH_3	Phosphine	XNXXSP1SS	1.20 ppm	N/A	N/A	1.20 ppm	0.5 to 0.7 ppm	GFV405	0.5 ppm PH_3 in N_2

1 Indicates agency approval and port thread specification

6.4.3 XNX EC Replacement Cells

Replacement Cell P/N	Target Gas		Cartridge Part No
S3KO1SS	O_2	Oxygen	XNXXS01SS XNXXSO1FM
S3KH1SS	H_2S	Hydrogen Sulfide (Low Range)	XNXXSH3SS
S3KH1SS S3KH1SS	H_2S	Hydrogen Sulfide	XNXXSH1SS XNXXSH1FM
S3KH2SS	H_2S	Hydrogen Sulfide (High Range)	XNXXSH2SS
S3KC1SS	CO	Carbon Monoxide	XNXXSC1SS XNXXSC1FM
S3KS1SS	SO_2	Sulfur Dioxide	XNXXSS1SS
S3KS1SS	SO_2	Sulfur Dioxide (High Range)	XNXXSS2SS
S3KA1SS	NH_3	Ammonia	XNXXSA1SS
S3KA2SS	NH_3	Ammonia (High Range)	XNXXSA2SS
S3KL1SS	Cl_2	Chlorine	XNXXSL2SS
S3KL1SS	Cl_2	Chlorine (High Range)	XNXXSL1SS
S3KX1SS	ClO_2	Chlorine Dioxide	XNXXSX1SS
S3KM1SS	NO	Nitrogen Monoxide	XNXXSM1SS
S3KN1SS	NO_2	Nitrogen Dioxide	XNXXSN1SS
S3KG1SS	H_2	Hydrogen (Low Range)	XNXXSG1SS
S3KG2SS	H_2	Hydrogen (High Range)	XNXXSG2SS
S3KR1SS	HCl	Hydrogen Chloride	XNXXSR1SS
S3KY1SS	HCN	Hydrogen Cyanide	XNXXSY1SS
S3KF1SS	HF	Hydrogen Fluoride	XNXXSF1SS
S3KZ1SS	O_3	Ozone	XNXXSZ1SS
S3KP1SS	PH_3	Phosphine	XNXXSP1SS

6.4.4 Multi Purpose Detector (MPD)

Similar to the XNX Transmitter, the MPD part numbering system defines the agency approval and thread type. The only material selection is Stainless Steel. Four sensor selections are available. Agency Approvals are specific to the 4 sensor types. Ensure the approval of the specific sensor type meets the requirements of the installation.

	Model Type (See Section 6.2 for Agency Approvals)	Port Config	Installed Sensor		Range
MPD -	▼	▼	▼	▼	▼
	AM	M25	**CB** - Catalytic Bead %LEL		**1** - Default
	UT	3/4" NPT	**IF** - IR %LEL Flammable		**2 to 9** - Future
	BT	3/4" NPT	**IV** - IR Methane 0-5% Vol		
			IC - R Carbon Dioxide 0-5% Vol		

6.4.5 XNX Catalytic Bead and IR Replacement Sensor Cartridges

Sensor Type[1,2]	Target Gas	Cartridge Part No	Operating Pressure Range (kPa)	Operating Humidity Range (% RH non-condensing)	Air Speed (m/s)	Maximum Range	Selectable Range[3]	Increment	Default Range	Cal Gas Range	Cal Gas P/N	Cal Gas Description
MPD-IC1	Carbon Dioxide	1226-0301	80 - 110	see footnote 4	0 - 6	5.00 %Vol	1.00 to 5.00 %Vol	1.00 %Vol	5.00 %Vol	1.50 to 3.5 %Vol	Contact HA	2.5 %VOL CO_2 in Air
MPD-IV1	Methane	1226-0299	80 - 110	0 - 95	0 - 6	5.00 %Vol	1.00 to 5.00 %Vol	1.00 %Vol	5.00 %Vol	1.50 to 3.5 %Vol	GFV352	2.5 %VOL CH_4 in Air
	Methane	1226-0299	80 - 110	0 - 95	0 - 6	100 %LEL	1.00 to 5.00 %Vol	1.00 %Vol	5.00 %Vol	1.50 to 3.5 %Vol	GFV352	2.5 %VOL CH_4 in Air
MPD-IF1	Flammables	1226-0300	80 - 110	0 - 95	0 - 6	100 %LEL	20 to 100 %LEL[3]	10 %LEL	100 %LEL	30 to 70 %LEL	GFV406	1 %VOL C_3H_8 in Air
MPD-CB1	Flammables	1226A0359	80 - 120	see footnote 5	0 - 6	100 %LEL	20 to 100 %LEL[3]	10 %LEL	100 %LEL	30 to 70 %LEL	GFV352	50 %LEL CH_4 in Air

1. Agency approved hydrogen sensors are MPD-CB1 and 705 STD.
2. When ordering replacement MPD sensor cartridges, the replacement cartridge must be the same type as factory configured. Substituting a different cartridge will void agency certification.
3. On XNX %LEL units carrying UL/CSA certifications, the range is fixed at 100%LEL and is not adjustable.
4. Humidity: 5% to 95% RH non-condensing
5. Humidity: 0 to 99% RH non-condensing

6.4.6 Accessories/Spares

Accessory/Spare		Part Number	Description
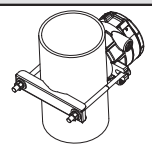	Pipe Mount Kit	1226A0358	For use on pipes from 2-6 inches (50-150mm) in diameter. Kit includes: Pipe Mount Bracket, (2) Carriage Bolts, Nuts and Lock Washers.
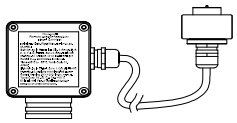	Remote EC Sensor Mounting Kit	S3KRMK	The remote sensor mounting kit (S3KRMK) allows the XNX EC sensors to be remotely mounted via an IS cable kit, up to 50 feet (15 meters) from the transmitter. The kit includes 50 feet of shielded cable, cable glands and remote terminal box. The cable can be cut to the required length and terminated at the remote terminal box.
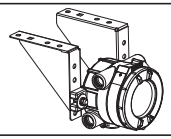	Ceiling Mount Bracket Kit	1226A0355	The optional Ceiling Mount Bracket Kit allows the XNX to be mounted to the ceiling. Kit includes: (2) Stainless Steel Ceiling Mount Brackets, bolts and nuts.
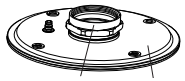	Duct Mount Kit	S3KDMK	The duct mounting kit (S3KDMK) can be used with the EC sensor to allow detection of O2, CO, H2 and H2S gases in ducts. When combined with the MPD Interface Adapter (1226A0382), the duct mounting kit can accommodate the MPD to detect flammable gases in a duct application. The duct mount kit includes the adapter, gasket and required fasteners. The MPD Interface Adapter includes only the adapter and requires the S3KDMK duct mount kit.
	MPD Interface Adapter	1226A0382	
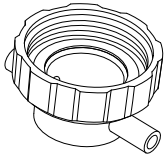	Calibration Gas Flow Adapter	1226A0411	MPD
		02000-A-1645	Sensepoint HT
		00780-A-0035	705
	Calibration Cup	S3KCAL	XNX EC - The calibration cup is used to apply calibration test gas to the sensor. It push fits onto the bottom of the sensor and can be fitted without removing the weatherproof cover.

Accessory/Spare		Part Number	Description	
	Weatherproof Cap	Included	XNX EC	The weatherproof cap protects the XNX sensors from harsh weather.
		02000-A-1640	MPD	
		02000-A-1640	Sensepoint	
		02000-A-1635	705	
	Extreme Weather Protector	SPXCDWP	Sensor XNX-EC or MPD; the weather protection is designed to protect the sensor from environmental conditions in outdoor exposure applications.	
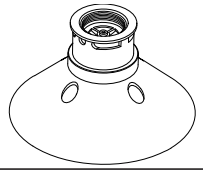	Collecting Cone	S3KCC	XNX EC	The collecting cone improves detection of lighter-than-air gases such as hydrogen and methane.
		02000-A-1642	MPD	
		02000-A-1642	Sensepoint	
		02000-A-1642	705	
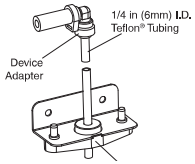	Remote Gassing Kit	1226A0354	The Remote Gassing Kit enables gas to be applied remotely for performing functional response checks. Kit Includes: 50' Teflon® tubing, mounting bracket, tube cap and device adapters in 1/4" and 1/8" ID to attach to bump test ports on the weatherproof cap of your device.	
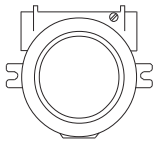	Remote MPD Mounting	2441-0022	UL/CSA Aluminum Junction Box	
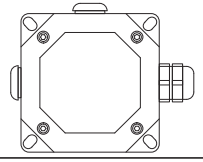		00780-A0100	ATEX/IEC Junction Box (3) M20, (1) M25 entries. "Ex e" ATEX IEC Approval	
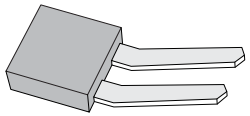	Terminal Block/Shorting Jumpers	Contact HA	Terminal block jumpers provide an electrical connection without connection to the Personality Board. Install the jumpers between pins 1 and 2 and between pins 3 and 4 to support multi-node wiring.	

Accessory/Spare		Part Number	Description
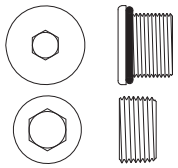	Stopping Plugs	1226-0257	M25 Plug w/protective cap and O-ring. (Certified for use with XNX Universal Transmitter only)
		1226-0258	3/4 NPT w/protective cap. (Certified for use with XNX Universal Transmitter only)
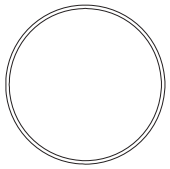	Replacement Cover O-ring	0235-1266	Replacement O-ring for the XNX front cover
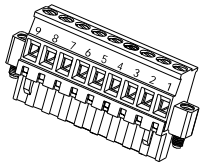	Pluggable Terminal Blocks	1226A0302	Terminal Block Ass'y 6-Pin XNX EC
		1226A0304	Terminal Block Ass'y 9-Pin XNX mV
		1226A0305	IR Terminal Block Kit Includes: 9-Pin and 2-Pin Terminal Blocks
		1226A0306	Relay Terminal Block Kit Includes: 9-Pin and 2-Pin Terminal Blocks
		1226A0307	Terminal Block Ass'y 10-Pin XNX Modbus
		1226A0303	Terminal Block Ass'y 6-Pin FFB
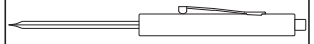	Magnetic Wand/Screwdriver	1226-0254	Replacement wand for front panel access
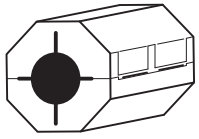	Ferrite Bead	0060-1051	Bead Ferrite MV XNX
	Foundation Fieldbus Ground Cable	0310-0041	Cable Ground Foundation Fieldbus XNX
	Small Screwdriver	1226-0408	Replacement screwdriver for use on Terminal Block TB2 and TB4 (IR Personality and Relay Option)

Accessory/Spare		Part Number	Description
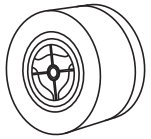	Weather Housing	0200-A-1635	For use with Series 2000, SensePoint, and SignalPoint EEC Sensor Products
	Weather Housing	0200-A-1640	For use with Series 2000, SensePoint, and SignalPoint Combustible Sensor Products

7 Control Drawings

7.1 XNX UL/INMETRO

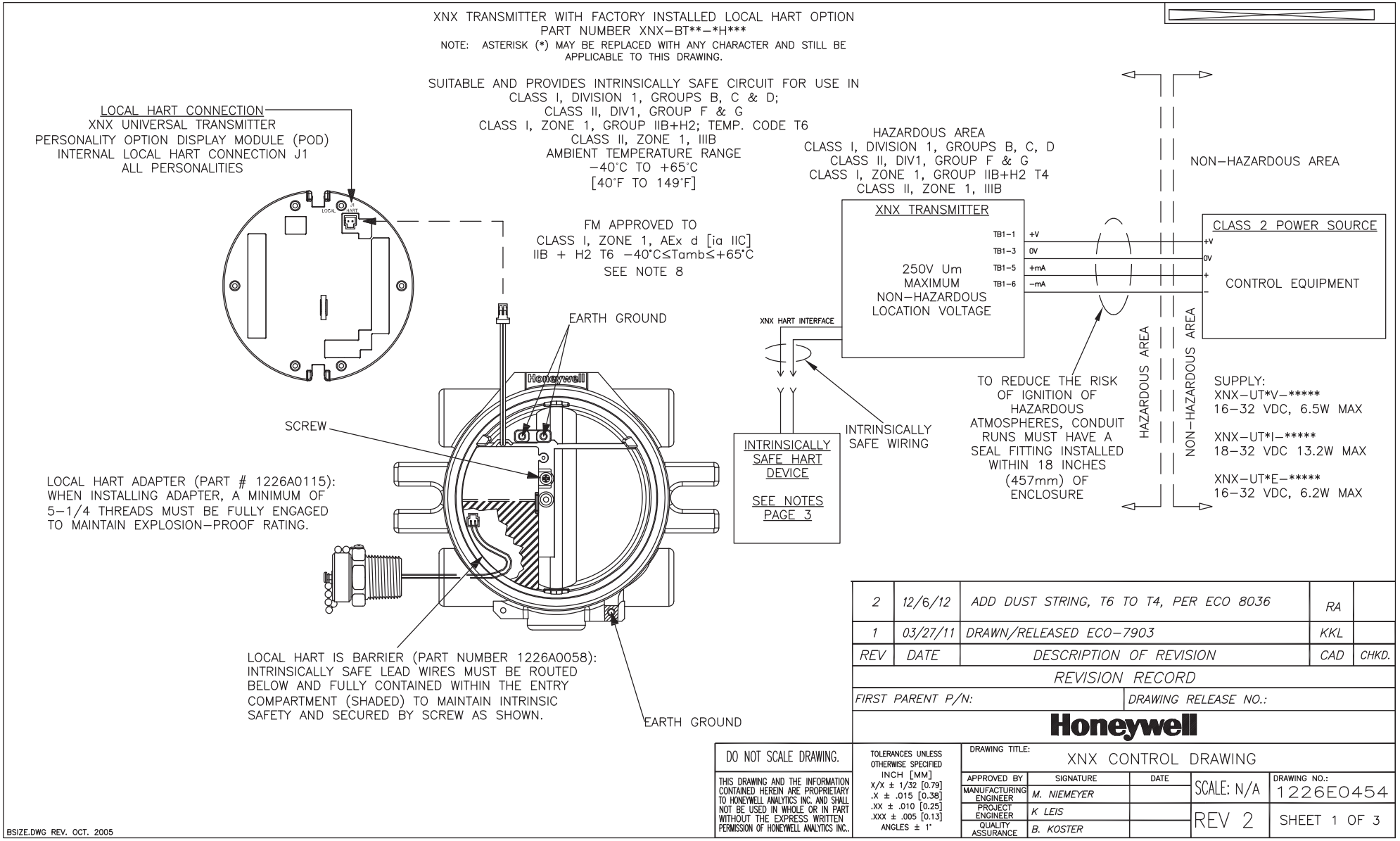

REV	DATE	DESCRIPTION OF REVISION	CAD	CHKD.
2	12/6/12	ADD DUST STRING, T6 TO T4, PER ECO 8036	RA	
1	03/27/11	DRAWN/RELEASED ECO–7903	KKL	

REVISION RECORD

FIRST PARENT P/N: | DRAWING RELEASE NO.:

Honeywell

DO NOT SCALE DRAWING.

THIS DRAWING AND THE INFORMATION CONTAINED HEREIN ARE PROPRIETARY TO HONEYWELL ANALYTICS INC. AND SHALL NOT BE USED IN WHOLE OR IN PART WITHOUT THE EXPRESS WRITTEN PERMISSION OF HONEYWELL ANALYTICS INC..

TOLERANCES UNLESS OTHERWISE SPECIFIED
INCH [MM]
X/X ± 1/32 [0.79]
.X ± .015 [0.38]
.XX ± .010 [0.25]
.XXX ± .005 [0.13]
ANGLES ± 1°

DRAWING TITLE: XNX CONTROL DRAWING

APPROVED BY	SIGNATURE	DATE
MANUFACTURING ENGINEER	M. NIEMEYER	
PROJECT ENGINEER	K LEIS	
QUALITY ASSURANCE	B. KOSTER	

SCALE: N/A | DRAWING NO.: 1226E0454

REV 2 | SHEET 1 OF 3

XNX UNIVERSAL TRANSMITTER WITH EC PERSONALITY
PART NUMBER XNX–BT*E–**NNN
NOTE: ASTERISK (*) MAY BE REPLACED WITH ANY CHARACTER AND STILL BE APPLICABLE TO THIS DRAWING.

SUITABLE AND PROVIDES INTRINSICALLY SAFE CIRCUIT FOR USE IN
CLASS I, DIVISION 1, GROUPS B, C & D;
CLASS II, DIV1, GROUP F & G
CLASS I, ZONE 1, GROUP IIB+H2; TEMP. CODE T6
CLASS II, ZONE 1, IIIB
AMBIENT TEMPERATURE RANGE
–40°C TO +65°C
[40°F TO 149°F]

FM APPROVED TO
CLASS I, ZONE 1, AEx d [ia IIC]
IIB + H2 T6 –40°C≤Tamb≤+65°C
SEE NOTE 8

EC ADAPTER/IS
BARRIER CONNECTIONS

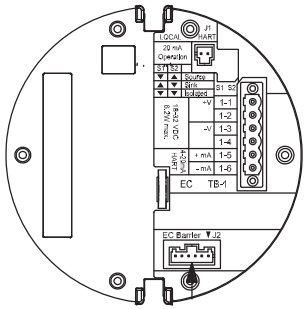

BARRIER CONNECTS TO J2
OF EC PERSONALITY PCB

EARTH WIRE (GREEN/YELLOW):
EARTH WIRE MUST BE CONNECTED
TO EARTH GROUND TO MAINTAIN
INTRINSIC SAFETY.

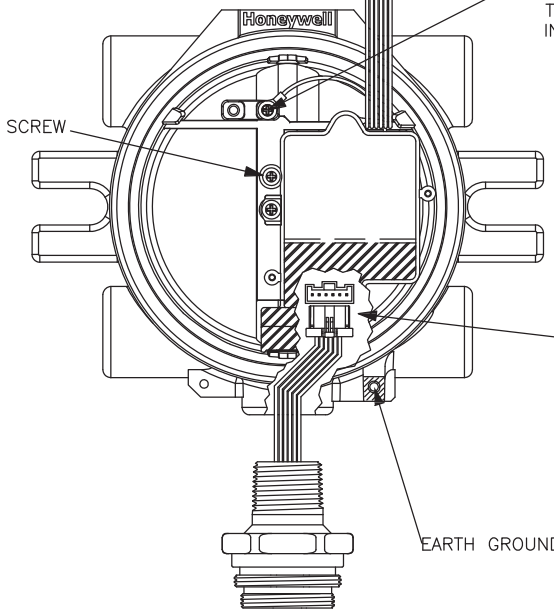

EC IS BARRIER
(PART NUMBER 1226A0057):
INTRINSICALLY SAFE LEAD WIRES MUST BE ROUTED
BELOW AND FULLY CONTAINED WITHIN
THE ENTRY COMPARTMENT (SHADED) TO MAINTAIN
INTRINSIC SAFETY AND SECURED BY SCREW AS SHOWN.

EC SENSOR ADAPTER

HAZARDOUS AREA
CLASS I, DIVISION 1, GROUPS B, C, D
CLASS II, DIV1, GROUP F & G
CLASS I, ZONE 1, GROUP IIB+H2 T4
CLASS II, ZONE 1, IIIB

NON–HAZARDOUS AREA

XNX TRANSMITTER

250V Um
MAXIMUM
NON–HAZARDOUS
LOCATION VOLTAGE

TB1–1 +V
TB1–3 0V
TB1–5 +mA
TB1–6 –mA

CLASS 2 POWER SOURCE
+V
0V
+
–
CONTROL EQUIPMENT

HAZARDOUS AREA
NON–HAZARDOUS AREA

SUPPLY:
XNX–UT*E–*****
16–32 VDC, 6.2W MAX

XNX EC
INTERFACE
SEE NOTES
PAGE 3

TO REDUCE THE RISK
OF IGNITION OF
HAZARDOUS
ATMOSPHERES, CONDUIT
RUNS MUST HAVE A
SEAL FITTING INSTALLED
WITHIN 18 INCHES
(457mm) OF
ENCLOSURE

REV	DATE	DESCRIPTION OF REVISION	CAD	CHKD.
–	--/--/--	SEE SHEET 1/	---	

REVISION RECORD

FIRST PARENT P/N:

DRAWING RELEASE NO.:

Honeywell

DO NOT SCALE DRAWING.

THIS DRAWING AND THE INFORMATION CONTAINED HEREIN ARE PROPRIETARY TO HONEYWELL ANALYTICS INC. AND SHALL NOT BE USED IN WHOLE OR IN PART WITHOUT THE EXPRESS WRITTEN PERMISSION OF HONEYWELL ANALYTICS INC..

TOLERANCES UNLESS OTHERWISE SPECIFIED
INCH [MM]
X/X ± 1/32 [0.79]
.X ± .015 [0.38]
.XX ± .010 [0.25]
.XXX ± .005 [0.13]
ANGLES ± 1°

DRAWING TITLE: XNX CONTROL DRAWING

APPROVED BY	SIGNATURE	DATE
MANUFACTURING ENGINEER	M. NIEMEYER	
PROJECT ENGINEER	K LEIS	
QUALITY ASSURANCE	B. KOSTER	

SCALE: N/A

REV 2

DRAWING NO.: 1226E0454

SHEET 2 OF 3

BSIZE.DWG REV. OCT. 2005

XNX TRANSMITTER WITH FACTORY INSTALLED LOCAL HART OPTION

1. ENTITY PARAMETERS OF XNX UNIVERSAL TRANSMITTER LOCAL HART INTERFACE

OUTPUT	INPUT
Uo = 24.15V	Ui = 21.85V
Io = 136mA	Ii = 120mA
Po = 0.82W	PI = 1.0W
Lo = 1.4mH	LI = 0.0mH
Co = 0.122uF	CI = 0.0uF

2. THE LOCAL HART DEVICE CONNECTED MUST BE THIRD PARTY LISTED AS INTRINSICALLY SAFE FOR THE APPLICATION, AND HAVE INTRINSICALLY SAFE ENTITY PARAMETERS CONFORMING WITH TABLE 1 BELOW.

TABLE 1

IS HART DEVICE		XNX HART INTERFACE
INPUT		OUTPUT
V max (or Ui)	≥	Voc or Vt (or Uo)
I max (or Ii)	≥	Isc or It (or Io)
P max, PI	≥	Po
CI + Ccable	≤	Ca (or Co)
Li + Lcable	≤	La (or Lo)
OUTPUT		INPUT
Voc or Vt (or Uo)	≤	V max (or UI)
Isc or It (or Io)	≤	I max (or II)
Po	≤	P max, PI
Ca (or Co)	≥	CI + Ccable
La (or Lo)	≥	LI + Lcable

XNX UNIVERSAL TRANSMITTER WITH EC PERSONALITY

1. ENTITY PARAMETERS OF XNX UNIVERSAL TRANSMITTER EC ADAPTER

OUTPUT		INPUT
Voc or Vt (or Uo) = 5.88 V	≤	V max (or Ui)
Isc or It (or Io) = 84 mA	≤	I max (or Ii)
Po = 123 mW	≤	P max, PI
Ca (or Co) = 10uF	≥	CI + Ccable
La (or Lo) = 1 mH	≥	Li + Lcable

XNX UNIVERSAL TRANSMITTER WITH EC PERSONALITY AND/OR LOCAL HART

1. THE OUTPUT CURRENT OF THE LOCAL HART AND EC IS BARRIERS ARE LIMITED BY A RESISTOR SUCH THAT THE OUTPUT VOLTAGE–CURRENT PLOT IS A STRAIGHT LINE DRAWN BETWEEN OPEN–CIRCUIT VOLTAGE AND SHORT–CIRCUIT CURRENT.
2. THE ASSOCIATED APPARATUS MAY ALSO BE CONNECTED TO SIMPLE APPARATUS AS DEFINED IN ARTICLE 504.2 AND INSTALLED AND TEMPERATURE CLASSIFIED IN ACCORDANCE WITH ARTICLE 504.10(B) OF THE NATIONAL ELECTRICAL CODE (ANSI/NFPA 70), OR OTHER LOCAL CODES, AS APPLICABLE.
3. CAPACITANCE AND INDUCTANCE OF THE FIELD WIRING FROM THE INTRINSICALLY SAFE EQUIPMENT TO THE ASSOCIATED APPARATUS SHALL BE CALCULATED AND MUST BE INCLUDED IN THE SYSTEM CALCULATIONS AS SHOWN IN TABLE 1. CABLE CAPACITANCE, Ccable, PLUS INTRINSICALLY SAFE EQUIPMENT CAPACITANCE, Ci MUST BE LESS THAN THE MARKED CAPACITANCE, Ca (OR Co), SHOWN ON ANY ASSOCIATED APPARATUS USED. THE SAME APPLIES FOR INDUCTANCE (Lcable, Li AND La OR Lo, RESPECTIVELY). WHERE THE CABLE CAPACITANCE AND INDUCTANCE PER FOOT ARE NOT KNOWN, THE FOLLOWING VALUES SHALL BE USED: Ccable = 60 PF/FT., Lcable = 0.2 µH/FT.
4. THE ASSOCIATED APPARATUS MUST BE CONNECTED TO A SUITABLE GROUND ELECTRODE PER THE NATIONAL ELECTRICAL CODE (ANSI/NFPA 70), THE CANADIAN ELECTRICAL CODE, OR OTHER LOCAL INSTALLATION CODES, AS APPLICABLE. THE RESISTANCE OF THE GROUND PATH MUST BE LESS THAN 1 OHM.
5. INTRINSICALLY SAFE CIRCUITS MUST BE WIRED AND SEPARATED IN ACCORDANCE WITH ARTICLE 504.20 OF THE NATIONAL ELECTRICAL CODE (ANSI/NFPA 70), OR OTHER LOCAL CODES, AS APPLICABLE. REFER TO ARTICLE 504.30(B) OF THE NATIONAL ELECTRICAL CODE (ANSI/NFPA 70) AND INSTRUMENT SOCIETY OF AMERICA RECOMMENDED PRACTICE ISA RP12.6 FOR INSTALLING INTRINSICALLY SAFE EQUIPMENT.
6. THIS ASSOCIATED APPARATUS HAS NOT BEEN EVALUATED FOR USE IN COMBINATION WITH ANOTHER ASSOCIATED APPARATUS.
7. CONTROL EQUIPMENT MUST NOT USE OR GENERATE MORE THAN 250 V RMS OR DC WITH RESPECT TO EARTH.

REV	DATE	DESCRIPTION OF REVISION	CAD	CHKD.
–	--/--/--	SEE SHEET 1/	---	

REVISION RECORD

FIRST PARENT P/N: | DRAWING RELEASE NO.:

Honeywell

DO NOT SCALE DRAWING.

THIS DRAWING AND THE INFORMATION CONTAINED HEREIN ARE PROPRIETARY TO HONEYWELL ANALYTICS INC. AND SHALL NOT BE USED IN WHOLE OR IN PART WITHOUT THE EXPRESS WRITTEN PERMISSION OF HONEYWELL ANALYTICS INC..

TOLERANCES UNLESS OTHERWISE SPECIFIED
INCH [MM]
X/X ± 1/32 [0.79]
.X ± .015 [0.38]
.XX ± .010 [0.25]
.XXX ± .005 [0.13]
ANGLES ± 1°

DRAWING TITLE: XNX CONTROL DRAWING

	SIGNATURE	DATE
APPROVED BY		
MANUFACTURING ENGINEER	M. NIEMEYER	
PROJECT ENGINEER	K LEIS	
QUALITY ASSURANCE	B. KOSTER	

SCALE: N/A | DRAWING NO.: 1226E0454

REV 2 | SHEET 3 OF 3

BSIZE.DWG REV. OCT. 2005

XNX TRANSMITTER WITH FACTORY INSTALLED LOCAL HART OPTION
PART NUMBER XNX–UT**–*H***
NOTE: ASTERISK (*) MAY BE REPLACED WITH ANY CHARACTER AND STILL BE APPLICABLE TO THIS DRAWING.

SUITABLE AND PROVIDES INTRINSICALLY SAFE CIRCUIT FOR USE IN
CLASS I, DIVISION 1, GROUPS A, B, C & D;
CLASS II, DIV1, GROUP F & G
CLASS I, ZONE 1, GROUP IIC; TEMP. CODE T6
CLASS II, ZONE 1, IIIB
AMBIENT TEMPERATURE RANGE
–40°C TO +65°C
[–40°F TO 149°F]

LOCAL HART CONNECTION
XNX UNIVERSAL TRANSMITTER
PERSONALITY OPTION DISPLAY MODULE (POD)
INTERNAL LOCAL HART CONNECTION J1
ALL PERSONALITIES

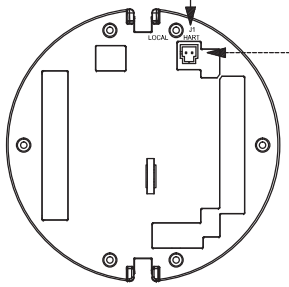

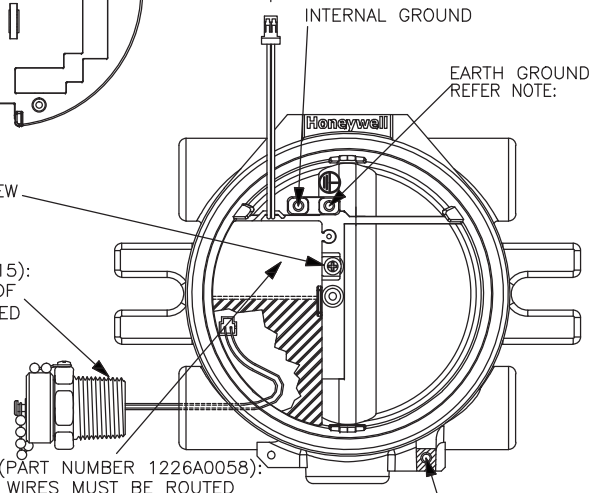

INTERNAL GROUND
EARTH GROUND
REFER NOTE:
SCREW
LOCAL HART ADAPTER (PART # 1226A0115):
WHEN INSTALLING ADAPTER, A MINIMUM OF
5–1/4 THREADS MUST BE FULLY ENGAGED
TO MAINTAIN EXPLOSION–PROOF RATING.
LOCAL HART IS BARRIER (PART NUMBER 1226A0058):
INTRINSICALLY SAFE LEAD WIRES MUST BE ROUTED
BELOW AND FULLY CONTAINED WITHIN THE ENTRY
COMPARTMENT (SHADED) TO MAINTAIN INTRINSIC
SAFETY AND SECURED BY SCREW AS SHOWN.
EARTH GROUND

XNX HART INTERFACE

INTRINSICALLY SAFE HART DEVICE
SEE NOTES PAGE 3

INTRINSICALLY SAFE WIRING

HAZARDOUS AREA
CLASS I, DIVISION 1, GROUPS A, B, C, D
CLASS II, DIV1, GROUP F & G
CLASS I, ZONE 1, GROUP IIC T4
CLASS II, ZONE 1, IIIB

XNX TRANSMITTER

250V Um
MAXIMUM
NON–HAZARDOUS
LOCATION VOLTAGE

TB1–1	+V	
TB1–3	0V	
TB1–5	+mA	
TB1–6	–mA	

TO REDUCE THE RISK OF IGNITION OF HAZARDOUS ATMOSPHERES, CONDUIT RUNS MUST HAVE A SEAL FITTING INSTALLED WITHIN 18 INCHES (457mm) OF ENCLOSURE

HAZARDOUS AREA

NON–HAZARDOUS AREA

NON–HAZARDOUS AREA

POWER SOURCE
+V
0V
+
–
CONTROL EQUIPMENT

SUPPLY:
XNX–UT*V–*****
16–32 VDC, 6.5W MAX

XNX–UT*I–*****
18–32 VDC 13.2W MAX

XNX–UT*E–*****
16–32 VDC, 6.2W MAX

NOTE:
DEDICATED PROTECTIVE CONDUCTOR TERMINAL(EARTH GROUND)
RESTRICT USE TO PROTECTIVE CONDUCTOR WHENEVER POSSIBLE. IF IT IS ALSO USED FOR OTHER BONDING PURPOSES, THE PROTECTIVE CONDUCTOR SHALL BE APPLIED FIRST AND SECURED INDEPENDENTLY OF OTHER CONNECTIONS.
THE PROTECTIVE CONDUCTOR SHALL BE CONNECTED IN SUCH A WAY THAT IT IS UNLIKELY TO BE REMOVED DURING SERVICING THAT DOES NOT REQUIRE DISCONNECTION OF THE PROTECTIVE CONDUCTOR.

BSIZE.DWG REV. OCT. 2005

REV	DATE	DESCRIPTION OF REVISION	CAD	CHKD.
5	20/05/15	ADD IIC, DELETE CLASS 2 PS, CHANGE GND SYMBOL	SK	
4	12/6/12	ADD DUST STRING, T4 TO T6, PER ECO 8036	RA	
3	2/12/10	SHTS 1–3: ADDED TEXTS FOR FM/ECO–7754	JAT	
2	03/05/09	REVISED PER AGENCY TO ADD EC & RELEASED/	KKL	
1	02/27/09	ISSUED TO AGENCY/	KKL	
B	02/26/09	REVISED DRAWING PER AGENCY REVIEW/	KKL	
A	02/25/09	DRAWN/	KKL	

REVISION RECORD

FIRST PARENT P/N:

DRAWING RELEASE NO.: 226–033

Honeywell

DO NOT SCALE DRAWING.

THIS DRAWING AND THE INFORMATION CONTAINED HEREIN ARE PROPRIETARY TO HONEYWELL ANALYTICS INC. AND SHALL NOT BE USED IN WHOLE OR IN PART WITHOUT THE EXPRESS WRITTEN PERMISSION OF HONEYWELL ANALYTICS INC..

TOLERANCES UNLESS OTHERWISE SPECIFIED
INCH [MM]
X/X ± 1/32 [0.79]
.X ± .015 [0.38]
.XX ± .010 [0.25]
.XXX ± .005 [0.13]
ANGLES ± 1°

DRAWING TITLE: XNX CONTROL DRAWING

	SIGNATURE	DATE
APPROVED BY		
MANUFACTURING ENGINEER	M. NIEMEYER	3/3/09
PROJECT ENGINEER	A. RELLA	3/3/09
QUALITY ASSURANCE	B. KOSTER	3/3/09

SCALE: N/A

DRAWING NO.: 1226E0402

REV 5

SHEET 1 OF 3

EC ADAPTER/IS
BARRIER CONNECTIONS

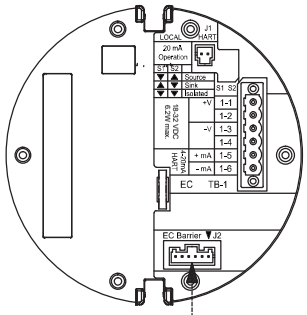

XNX TRANSMITTER WITH FACTORY INSTALLED LOCAL HART OPTION
PART NUMBER XNX–UT**–*H***
NOTE: ASTERISK (*) MAY BE REPLACED WITH ANY CHARACTER AND STILL BE APPLICABLE TO THIS DRAWING.

SUITABLE AND PROVIDES INTRINSICALLY SAFE CIRCUIT FOR USE IN
CLASS I, DIVISION 1, GROUPS A, B, C & D;
CLASS II, DIV1, GROUP F & G
CLASS I, ZONE 1, GROUP IIC; TEMP. CODE T6
CLASS II, ZONE 1, IIIB
AMBIENT TEMPERATURE RANGE
–40°C TO +65°C
[–40°F TO 149°F]

HAZARDOUS AREA
CLASS I, DIVISION 1, GROUPS A, B, C, D
CLASS II, DIV1, GROUP F & G
CLASS I, ZONE 1, GROUP IIC T4
CLASS II, ZONE 1, IIIB

NON–HAZARDOUS AREA

XNX TRANSMITTER

250V Um
MAXIMUM
NON–HAZARDOUS
LOCATION VOLTAGE

TB1–1 +V
TB1–3 0V
TB1–5 +mA
TB1–6 –mA

POWER SOURCE
+V
0V
+
–
CONTROL EQUIPMENT

XNX EC
INTERFACE

SEE NOTES
PAGE 3

HAZARDOUS AREA

NON–HAZARDOUS AREA

SUPPLY:

XNX–UT*E–*****
16–32 VDC, 6.2W MAX

TO REDUCE THE RISK OF IGNITION OF HAZARDOUS ATMOSPHERES, CONDUIT RUNS MUST HAVE A SEAL FITTING INSTALLED WITHIN 18 INCHES (457mm) OF ENCLOSURE

BARRIER CONNECTS TO J2
OF EC PERSONALITY PCB

GROUND WIRE (GREEN/YELLOW):
GROUND WIRE FROM BARRIER MUST BE CONNECTED TO EARTH GROUND TO MAINTAIN INTRNSIC SAFETY.
EARTH GROUND
REFER NOTE:

SCREW

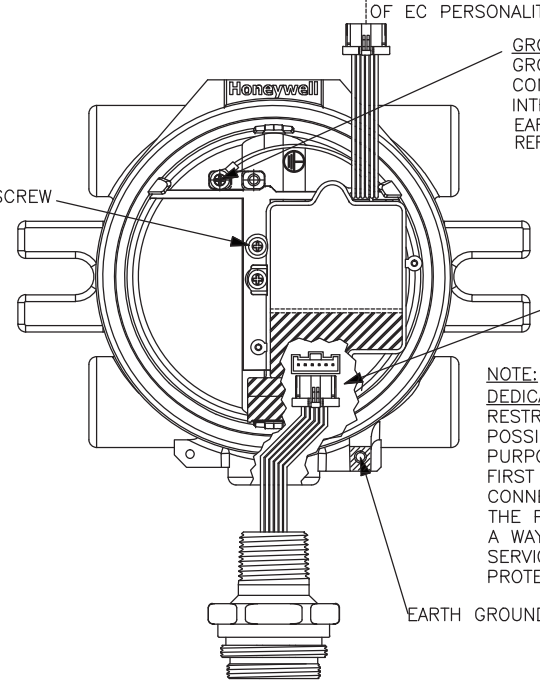

EC IS BARRIER
(PART NUMBER 1226A0057):
INTRINSICALLY SAFE LEAD WIRES MUST BE ROUTED BELOW AND FULLY CONTAINED WITHIN THE ENTRY COMPARTMENT (SHADED) TO MAINTAIN INTRINSIC SAFETY AND SECURED BY SCREW AS SHOWN.

NOTE:
DEDICATED PROTECTIVE CONDUCTOR TERMINAL(EARTH GROUND)
RESTRICT USE TO PROTECTIVE CONDUCTOR WHENEVER POSSIBLE. IF IT IS ALSO USED FOR OTHER BONDING PURPOSES, THE PROTECTIVE CONDUCTOR SHALL BE APPLIED FIRST AND SECURED INDEPENDENTLY OF OTHER CONNECTIONS.
THE PROTECTIVE CONDUCTOR SHALL BE CONNECTED IN SUCH A WAY THAT IT IS UNLIKELY TO BE REMOVED DURING SERVICING THAT DOES NOT REQUIRE DISCONNECTION OF THE PROTECTIVE CONDUCTOR.

EARTH GROUND

EC SENSOR ADAPTER

BSIZE.DWG REV. OCT. 2005

REV	DATE	DESCRIPTION OF REVISION	CAD	CHKD.
–	--/--/--	SEE SHEET 1/	---	

REVISION RECORD

FIRST PARENT P/N: | DRAWING RELEASE NO.: —

Honeywell

DO NOT SCALE DRAWING.

THIS DRAWING AND THE INFORMATION CONTAINED HEREIN ARE PROPRIETARY TO HONEYWELL ANALYTICS INC. AND SHALL NOT BE USED IN WHOLE OR IN PART WITHOUT THE EXPRESS WRITTEN PERMISSION OF HONEYWELL ANALYTICS INC..

TOLERANCES UNLESS OTHERWISE SPECIFIED
INCH [MM]
X/X ± 1/32 [0.79]
.X ± .015 [0.38]
.XX ± .010 [0.25]
.XXX ± .005 [0.13]
ANGLES ± 1°

DRAWING TITLE: XNX CONTROL DRAWING

APPROVED BY	SIGNATURE	DATE
MANUFACTURING ENGINEER	M. NIEMEYER	3/3/09
PROJECT ENGINEER	A. RELLA	3/3/09
QUALITY ASSURANCE	B. KOSTER	3/3/09

SCALE: N/A | REV 5 | DRAWING NO.: 1226E0402 | SHEET 2 OF 3

XNX TRANSMITTER WITH FACTORY INSTALLED LOCAL HART OPTION

1. ENTITY PARAMETERS OF XNX UNIVERSAL TRANSMITTER LOCAL HART INTERFACE

OUTPUT	INPUT
Uo = 24.15V	Ui = 21.85V
Io = 136mA	Ii = 120mA
Po = 0.82W	Pi = 1.0W
Lo = 1.4mH	Li = 0.0mH
Co = 0.122uF	Ci = 0.0uF

2. THE LOCAL HART DEVICE CONNECTED MUST BE THIRD PARTY LISTED AS INTRINSICALLY SAFE FOR THE APPLICATION, AND HAVE INTRINSICALLY SAFE ENTITY PARAMETERS CONFORMING WITH TABLE 1 BELOW.

TABLE 1

IS HART DEVICE		XNX HART INTERFACE
INPUT		**OUTPUT**
V max (or Ui)	≥	Voc or Vt (or Uo)
I max (or Ii)	≥	Isc or It (or Io)
P max, Pi	≥	Po
Ci + Ccable	≤	Ca (or Co)
Li + Lcable	≤	La (or Lo)
OUTPUT		**INPUT**
Voc or Vt (or Uo)	≤	V max (or Ui)
Isc or It (or Io)	≤	I max (or Ii)
Po	≤	P max, Pi
Ca (or Co)	≥	Ci + Ccable
La (or Lo)	≥	Li + Lcable

XNX UNIVERSAL TRANSMITTER WITH EC PERSONALITY

1. ENTITY PARAMETERS OF XNX UNIVERSAL TRANSMITTER EC ADAPTER

OUTPUT		INPUT
Voc or Vt (or Uo) = 5.88 V	≤	V max (or Ui)
Isc or It (or Io) = 84 mA	≤	I max (or Ii)
Po = 123 mW	≤	P max, Pi
Ca (or Co) = 10uF	≥	Ci + Ccable
La (or Lo) = 1 mH	≥	Li + Lcable

XNX UNIVERSAL TRANSMITTER WITH EC PERSONALITY AND/OR LOCAL HART

1. THE OUTPUT CURRENT OF THE LOCAL HART AND EC IS BARRIERS ARE LIMITED BY A RESISTOR SUCH THAT THE OUTPUT VOLTAGE–CURRENT PLOT IS A STRAIGHT LINE DRAWN BETWEEN OPEN–CIRCUIT VOLTAGE AND SHORT–CIRCUIT CURRENT.
2. THE ASSOCIATED APPARATUS MAY ALSO BE CONNECTED TO SIMPLE APPARATUS AS DEFINED IN ARTICLE 504.2 AND INSTALLED AND TEMPERATURE CLASSIFIED IN ACCORDANCE WITH ARTICLE 504.10(B) OF THE NATIONAL ELECTRICAL CODE (ANSI/NFPA 70), OR OTHER LOCAL CODES, AS APPLICABLE.
3. CAPACITANCE AND INDUCTANCE OF THE FIELD WIRING FROM THE INTRINSICALLY SAFE EQUIPMENT TO THE ASSOCIATED APPARATUS SHALL BE CALCULATED AND MUST BE INCLUDED IN THE SYSTEM CALCULATIONS AS SHOWN IN TABLE 1. CABLE CAPACITANCE, Ccable, PLUS INTRINSICALLY SAFE EQUIPMENT CAPACITANCE, Ci MUST BE LESS THAN THE MARKED CAPACITANCE, Ca (OR Co), SHOWN ON ANY ASSOCIATED APPARATUS USED. THE SAME APPLIES FOR INDUCTANCE (Lcable, Li AND La OR Lo, RESPECTIVELY). WHERE THE CABLE CAPACITANCE AND INDUCTANCE PER FOOT ARE NOT KNOWN, THE FOLLOWING VALUES SHALL BE USED: Ccable = 60 PF/FT., Lcable = 0.2 µH/FT.
4. THE ASSOCIATED APPARATUS MUST BE CONNECTED TO A SUITABLE GROUND ELECTRODE PER THE NATIONAL ELECTRICAL CODE (ANSI/NFPA 70), THE CANADIAN ELECTRICAL CODE, OR OTHER LOCAL INSTALLATION CODES, AS APPLICABLE. THE RESISTANCE OF THE GROUND PATH MUST BE LESS THAN 1 OHM.
5. INTRINSICALLY SAFE CIRCUITS MUST BE WIRED AND SEPARATED IN ACCORDANCE WITH ARTICLE 504.20 OF THE NATIONAL ELECTRICAL CODE (ANSI/NFPA 70), THE CANADIAN ELECTRICAL CODE, OR OTHER LOCAL CODES, AS APPLICABLE. REFER TO ARTICLE 504.30(B) OF THE NATIONAL ELECTRICAL CODE (ANSI/NFPA 70) AND INSTRUMENT SOCIETY OF AMERICA RECOMMENDED PRACTICE ISA RP12.6 FOR INSTALLING INTRINSICALLY SAFE EQUIPMENT.
6. THIS ASSOCIATED APPARATUS HAS NOT BEEN EVALUATED FOR USE IN COMBINATION WITH ANOTHER ASSOCIATED APPARATUS.
7. CONTROL EQUIPMENT MUST NOT USE OR GENERATE MORE THAN 250 V RMS OR DC WITH RESPECT TO EARTH.
8. FOR AEx ia COMPLIANCE, THE ASSOCIATED APPARATUS MUST BE INSTALLED IN ACCORDANCE WITH NFPA 70, ARTICLE 505.

REV	DATE	DESCRIPTION OF REVISION	CAD	CHKD.
–	--/--/--	SEE SHEET 1/	---	

REVISION RECORD

FIRST PARENT P/N:

DRAWING RELEASE NO.: —

Honeywell

DO NOT SCALE DRAWING.

THIS DRAWING AND THE INFORMATION CONTAINED HEREIN ARE PROPRIETARY TO HONEYWELL ANALYTICS INC. AND SHALL NOT BE USED IN WHOLE OR IN PART WITHOUT THE EXPRESS WRITTEN PERMISSION OF HONEYWELL ANALYTICS INC..

TOLERANCES UNLESS OTHERWISE SPECIFIED
INCH [MM]
X/X ± 1/32 [0.79]
.X ± .015 [0.38]
.XX ± .010 [0.25]
.XXX ± .005 [0.13]
ANGLES ± 1°

DRAWING TITLE: XNX CONTROL DRAWING

	APPROVED BY	SIGNATURE	DATE
MANUFACTURING ENGINEER	M. NIEMEYER	3/3/09
PROJECT ENGINEER	A. RELLA	3/3/09
QUALITY ASSURANCE	B. KOSTER	3/3/09

SCALE: N/A

REV 5

DRAWING NO.: 1226E0402

SHEET 3 OF 3

BSIZE.DWG REV. OCT. 2005

Remote Sensor Mount

3000E3159 sht. 1

THIS DOCUMENT HAS BEEN GENERATED USING C.A.D AND MUST ONLY BE UPDATED BY C.A.D.

Honeywell

Toxic/Oxygen Sensor Cartridge

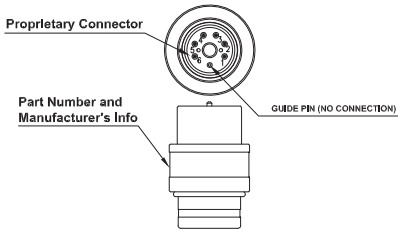

Notes:
1. Intrinsically Safe Device Entity Parameters
   Entity Parameters for Toxic/Oxygen Sensor Cartridge Only
   Ui=5.88V; Ii=0.124A; Pi=0.183W; Li=0uH Ci=5uf
   Vmax Imax Pmax Li=Lcable Ci+Ccable
   Entity Parameters for Cartridge and Remote Accessory with Cable
   Ui=5.88V; Ii=0.124A; Pi=0.183W; Li=10uH Ci=5.003uf
   Vmax Imax Pmax Li=Lcable Ci+Ccable
2. Associated apparatus output current must be limited by a resistor such that the output voltage-current plot is a straight line drawn between open-circuit voltage and short-circuit current.
   TABLE 1:

I.S. Equipment		Associated Apparatus
V max (or Ui)	≥	Voc or Vt (or Uo)
I max (or Ii)	≥	Isc or It (or Io)
P max (or Pi)	≥	Po
Ci + Ccable	≥	Ca (or Co)
Li + Lcable	≤	La (or Lo)

3. Selected associated apparatus must be third party listed as providing intrinsically safe circuits for the application, and have Voc or Vt not exceeding Vmax (or Uo not exceeding Ui), Isc or It not exceeding Imax (or Io not exceeding Ii), and the Po of the associated apparatus must be less than or equal to the Pmax or Pi of the intrinsically safe equipment, as shown in Table above.
4. Control equipment must not use or generate more than 250V rms or dc with respect to earth.
5. Associated apparatus may be in a Division 2 or Zone 2 location if so approved.
6. Associated apparatus must be installed in accordance with its manufacturer's control drawing and Article 504 of the National Electrical Code (ANSI/NFPA 70) for installation in the United States, or Section 18 of the Canadian Electrical Code for Installations in Canada.
7. When required by the manufacturer's control drawing, the associated apparatus must be connected to a suitable ground electrode per the National Electrical Code (ANSI/NFPA 70), the Canadian Electrical Code, or other local installation codes, as applicable. The resistance of the ground path must be less than 1 ohm.
8. Refer to following table for Specific Part Numbers in this listing.
9. XNXXSC1FM, XNXXSH1FM and XNXXSO1FM shall be installed in accordance with XNX Control Drawing 1226E0402

Gas Type	Sensor Part No.	Gas Type	Sensor Part No.	Gas Type	Sensor Part No.
H2S(L)	S3KXSH1SS or XNXXSH1SS, XNXXSH1FM	O2	S3KXSO1SS or XNXXSO1SS, XNXXSO1FM	CO	S3KXSC1SS or XNXXSC1SS, XNXXSC1FM
H2S(H)	S3KXSH2SS or XNXXSH2SS	NH3(L)	S3KXSA1SS or XNXXSA1SS	H2(L)	S3KXSG1SS or XNXXSG1SS
H2S(LL)	S3KXSH3SS or XNXXSH3SS	NH3(H)	S3KXSA2SS or XNXXSA2SS	H2(H)	S3KXSG2SS or XNXXSG2SS
HF	S3KXSF1SS or XNXXSF1SS	Cl2(H)	S3KXSL1SS or XNXXSL1SS	HCl	S3KXSR1SS or XNXXSR1SS
NO	S3KXSM1SS or XNXXSM1SS	Cl2(L)	S3KXSL2SS or XNXXSL2SS	HCN	S3KXSY1SS or XNXXSY1SS
SO2(L)	S3KXSS1SS or XNXXSS1SS	ClO2	S3KXSX1SS or XNXXSX1SS	O3	S3KXSZ1SS or XNXXSZ1SS
SO2(H)	S3KXSS2SS or XNXXSS2SS	NO2	S3KXSN1SS or XNXXSN1SS	PH3	S3KXSP1SS or XNXXSP1SS

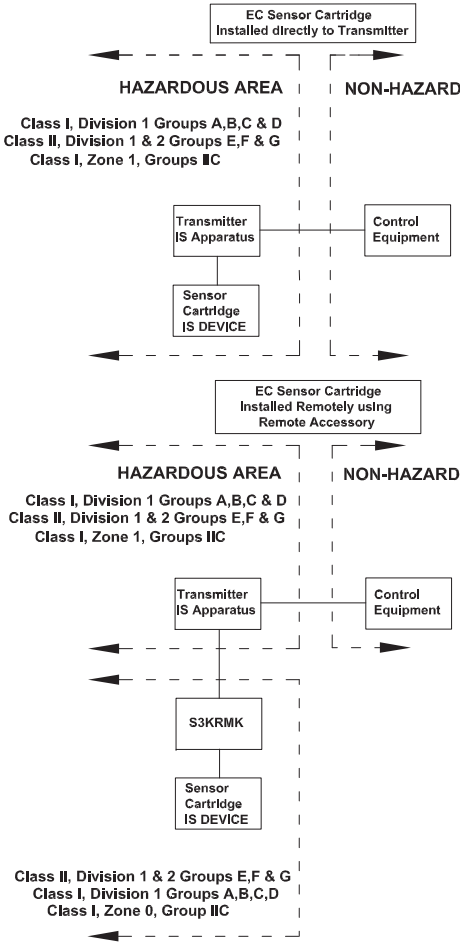

Remote Sensor Accessory
Honeywell Part Number S3KRMK

Connections:	
PIN #	Color
1	Yellow
2	Green
3	Blue
4	White
5	Red
6	Black

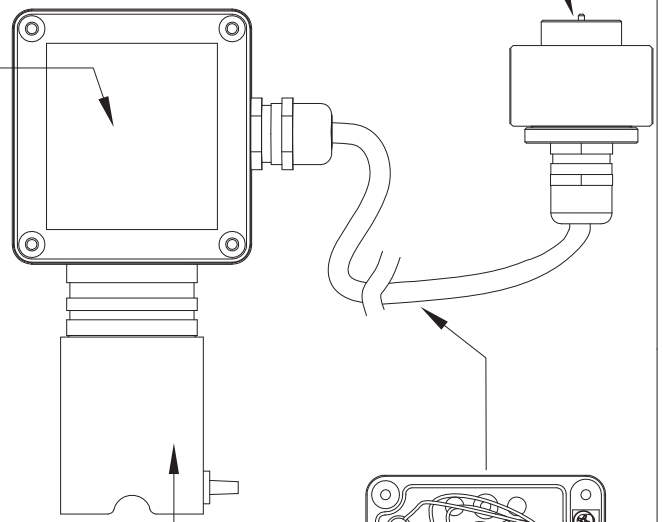

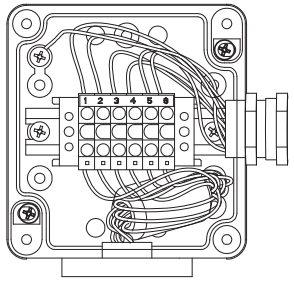

Notes:
1. The Remote Sensor Accessory is provided with a permanently connected 250 foot (76.2m) cable which is the maximun allowable length. Lengthening or splicing of the cable will void Intrinsic Safety Approval.
2. Cable Type: 6 Connector (3 twisted pairs) 24AWG, Instrument Cable Braid Shield, PVC Jacket 80C 300v AWM 2464

THIS ITEM FORMS PART OF A CERTIFIED PRODUCT
NO MODIFICATION PERMITTED WITHOUT
REFERENCE TO CERTIFICATION DEPARTMENT

THIS DRAWING IS CONFIDENTIAL.
IT IS THE PROPERTY OF HONEYWELL ANALYTICS LTD AND MUST NOT BE REPRODUCED EITHER WHOLLY OR PARTLY. ALL RIGHTS IN RESPECT OF PATENTS, DESIGNS AND COPYRIGHT ARE RESERVED.

TOLERANCES TO BE AS SPECIFIED BELOW UNLESS OTHERWISE STATED.
DIMENSIONS: 2 DP ± 0.10 mm; 1 DP ± 0.25 mm; NONE ± 0.40 mm; ANGULAR ± 1/2°
HOLES: ø 0 to 8 + 0.08 − 0.0; ø 8 to 14 + 0.1 − 0.0; ø 14 to 25 + 0.12 − 0.0

ALL DIMENSIONS IN MILLIMETRES UNLESS OTHERWISE STATED, AND APPLY AFTER PLATING
THIS DRAWING IS TO BS 8888
REMOVE ALL BURRS AND SHARP EDGES
SURFACE TEXTURE VALUES ARE IN um Ra AND TO BS 1134

FINISH

MATERIAL

	3	2	1
ISSUE			
DATE	22/MAY/15	26/OCT/11	16/NOV/09
CHANGE	CHANGED NOTES	CHANGED NOTES	NEW DRAWING
APPROVED BY	JEFFREY LEE	JEFFREY LEE	J.Y.JIN

SCALE 1/1
DR'N BEN 16/NOV/09
TITLE XNX_ECC_CARTRIDGE_CONTROL_DRAWING
3000E3159 SHT. 1 OF 1
A.2

Honeywell

Appendix A - HART® Protocol

A.1 HART® Interface

The XNX Universal Transmitter is registered with the HART Communication Foundation.

Note: Only qualified service personel should perform the procedures in this section.

Every XNX® gas sensor can communicate using the HART protocol (defined by the HART Communication Foundation at http://www.hartcomm.org). HART is unique among fieldbuses in that the digital signal is superimposed on a traditional 4-20 mA current loop. This provides the reliability of analog signaling with the advanced diagnostic capability of a digital device.

HART devices are usually connected as point-to-point networks. The analog output of the XNX transmitter can also be disabled to facilitate construction of multidrop, all-digital HART networks.

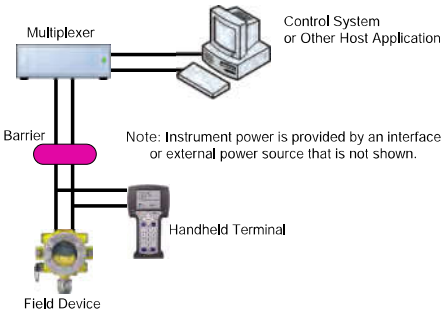

Figure 233. HART Point-to-point Mode

If HART is not needed, the unit can be used as a 4-20 mA transmitter. Since the transmitter is a slave, the internal modem will remain silent if no master signal is present. Additionally the HART signal is at too high a frequency (1200 Hz) to interfere with analog control equipment. Another novel feature of HART networks is that two masters can be present. The primary master is usually a distributed control system (DCS), programmable logic controller (PLC), or a personal computer (PC). The secondary master can be a handheld terminal. The XNX transmitter has been tested with the handheld Emerson field communicator.

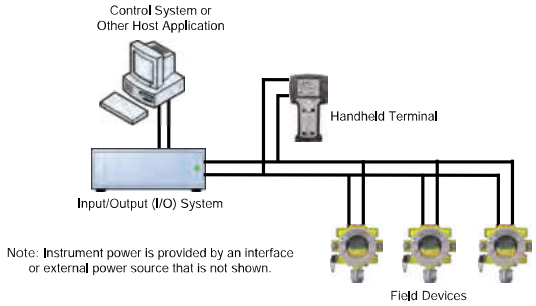

Figure 234. HART Multi-point Mode

The XNX device descriptor (DD) file provides HART users with data on the capabilities and features of the XNX Universal Transmitter. Select HART enabled devices are able to interface with XNX transmitters when connected via HART communication. A copy of the file is included on the Documentation CD. This DD file can be installed on HART-enabled Emerson field communicators using the Emerson Easy Upgrade Utility. The DD files located on the resource CD are compatible with the software integral to the transmitter. Older transmitters using earlier versions of software require previous versions of the DD files. Contact your local Honeywell representative with any questions regarding software compatibility.

During manufacturing, Honeywell configures the 8-digit HART tag to the XNX serial number. This can be used to confirm correct wiring from the transmitter to the control system. If desired, the HART tag can be modified. The fixed XNX serial number can also be read over HART.

For convenience, the transmitter presents the HART signal on two interfaces. The 1200 Hz AC signal is capacitively coupled to the main 20 mA analog output. This may be monitored at the control system

or at any point along the 20 mA loop. Additionally, the optional local HART interface (P/N: XNX-HIF) permits temporary connection of a HART terminal to the transmitter. This local HART port is transformer-coupled to the main 20 mA output. This port is intrinsically safe and polarity insensitive. See Section 2.3.1 for more information.

The internal HART modem functions as a high-impedance current source. Thus transferring the HART signal requires a certain minimum loop resistance between the slave and a low-impedance power supply.

Normally, this resistance is supplied by the control system and so need not be explicitly added. However, special treatment is needed when the 20 mA output is not used and the local HART interface is needed. (An installer might choose to communicate using relays, Modbus®, or Foundation™ Fieldbus instead.) In this case, the supplied 510 ohm resistor must be fitted to create an "artificial" 20 mA loop. The resistor should be connected between TB-1 terminal 1-3 and terminal 1-6. Additionally, S1 and S2 should be placed in "source" configuration. This is shown schematically in Figure 237.

The digital HART interface provides all of the capabilities of the local user interface. The XNX transmitter has been designed to use the portable Emerson field communicator with DevCom2000 software for Microsoft Windows® and Emerson AMS Intelligent Device Manager. Using HART, a service person can display information, test, calibrate, and configure. A map of the HART menus is provided in Section A.1.3.

ATEX Conditions for Safe Use of Intrinsically Safe HART Handheld Devices

For installations in which both the Ci and Ii of the intrinsically safe apparatus exceeds 1% of the Co and Io parameters of the associated apparatus (excluding the cable), 50% of Co and Io parameters are applicable and shall not be exceeded, i.e., the Ci of the device plus the C of the cable must be less than or equal to 50% of the Co of the associated apparatus, and the Ii of the device plus the I of the cable must be less than or equal to 50% of the Io of the associated apparatus.

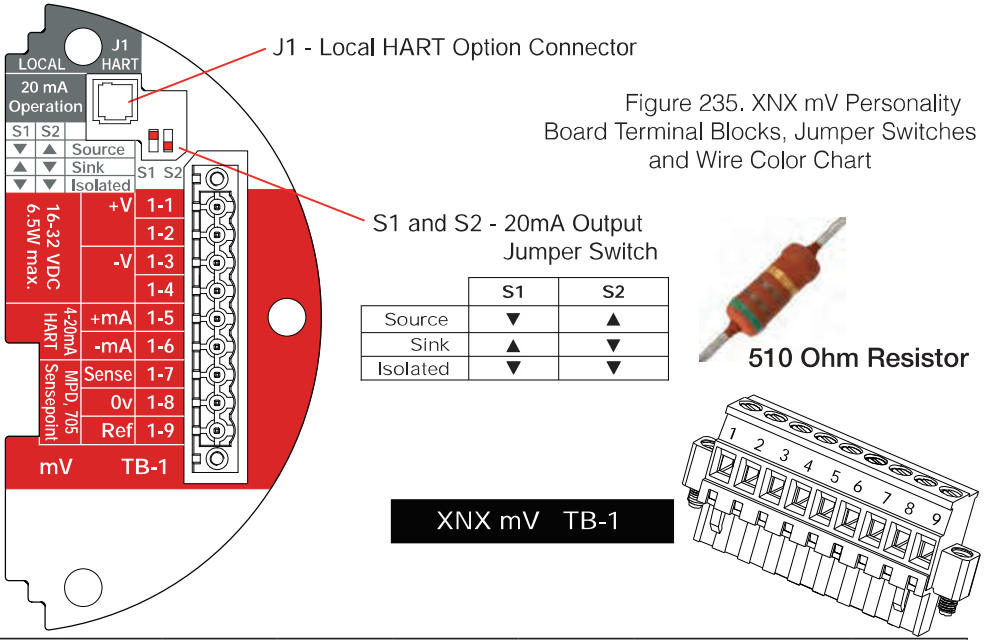

Figure 235. XNX mV Personality Board Terminal Blocks, Jumper Switches and Wire Color Chart

mV Sensor Type								
		Catalytic Bead				MPD w/IR		
		MPD	705 705HT	S'point S'point HT	S'point PPM	IR 5% CO_2	IR 5% CH_4	IR Flam
TB-1	Desc.	Wire Color from Sensor						
1	24v	See Section 2.2.4.						
2								
3	Gnd							
4								
5	20mA +							
6	20mA -							
7	Sense	Brown			Red	Brown		
8	0v	White			Green	White		
9	Ref	Blue			Blue	Blue		
				Internal Ground				

A.1.1 HART Sink, Source, and Isolated Wiring

The following figures illustrate the proper HART Multidrop wiring for the XNX.

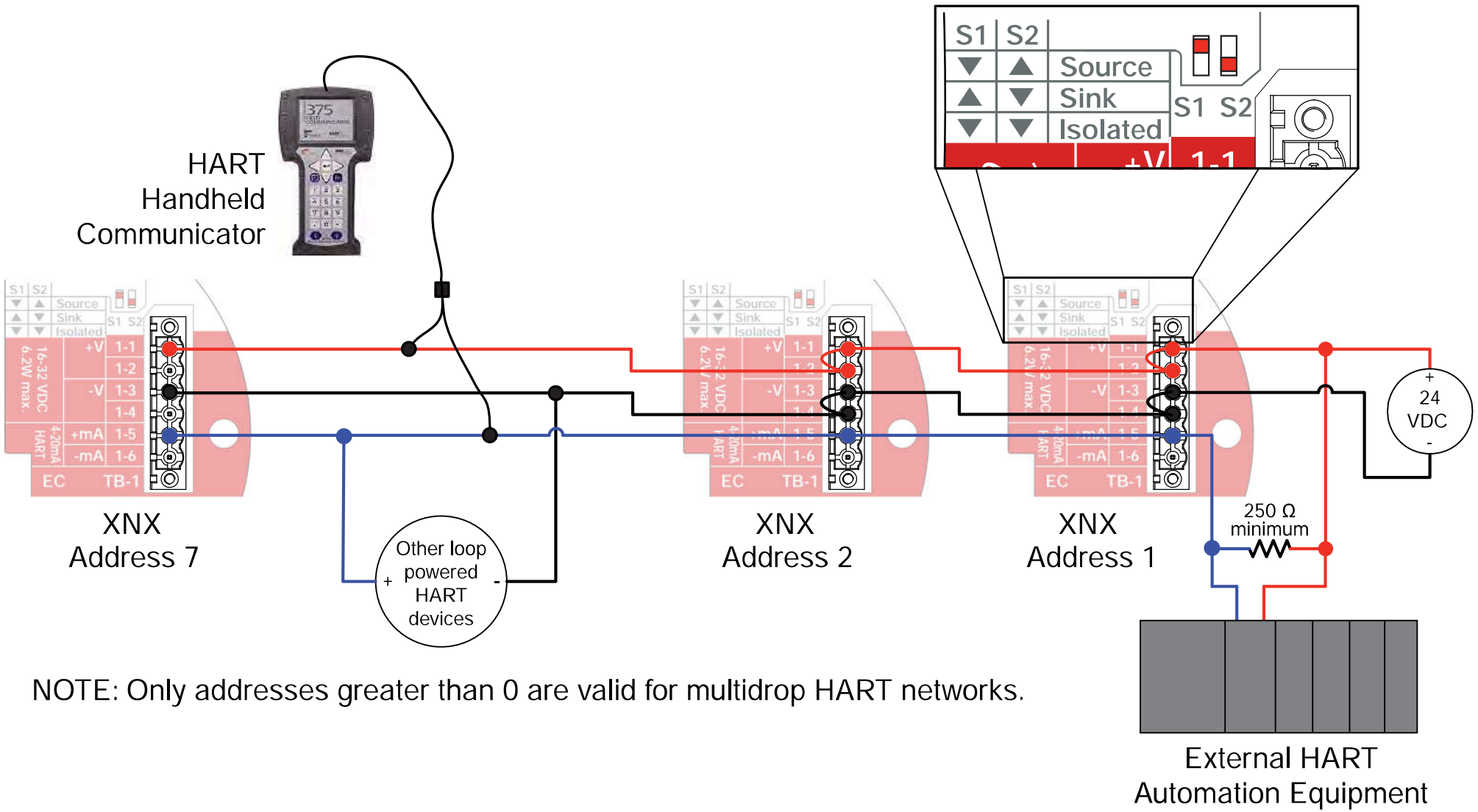

NOTE: Only addresses greater than 0 are valid for multidrop HART networks.

Figure 236. XNX Multidrop HART Network Wiring - XNX Sink

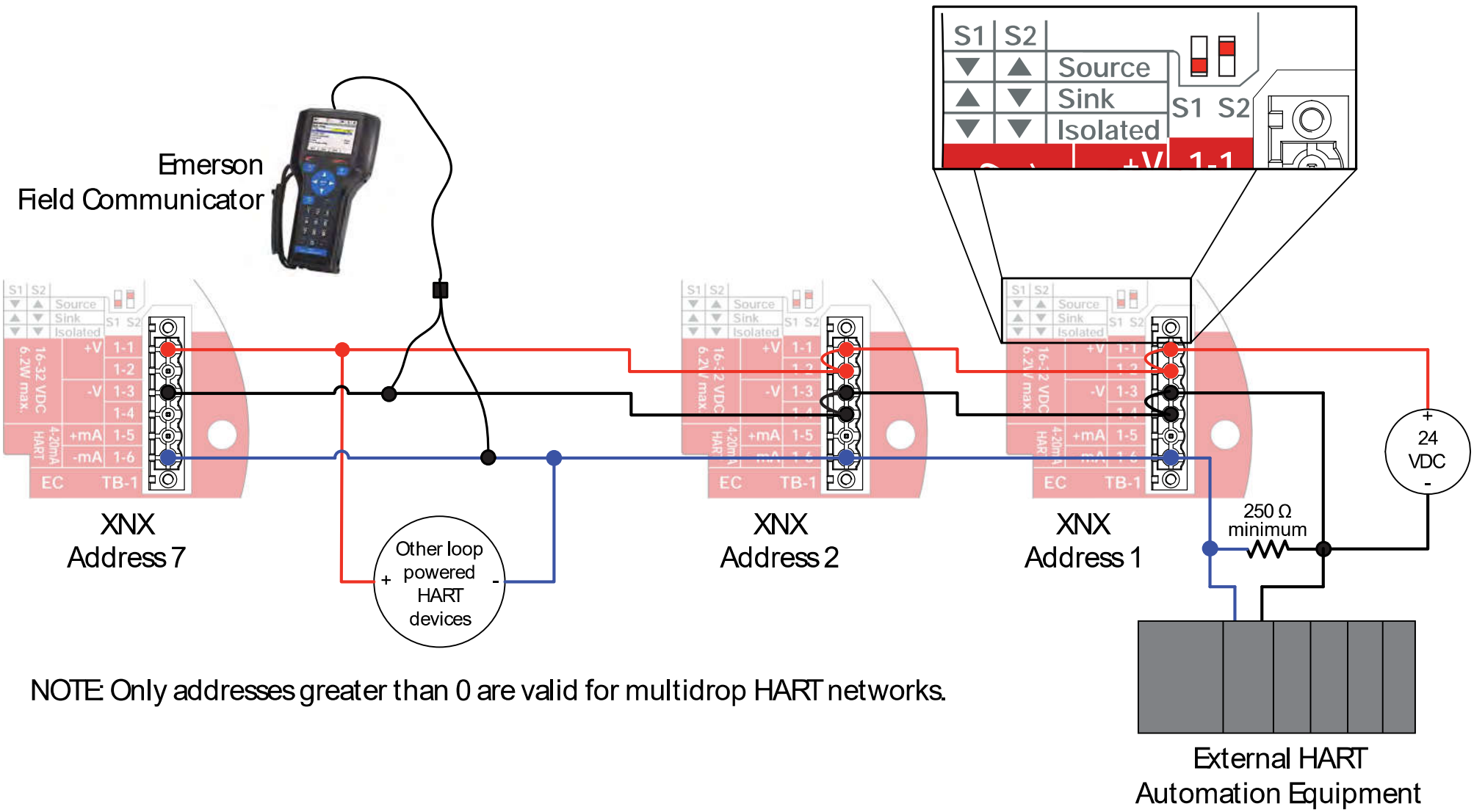

NOTE: Only addresses greater than 0 are valid for multidrop HART networks.

Figure 237. XNX Multidrop HART Network Wiring - XNX Source

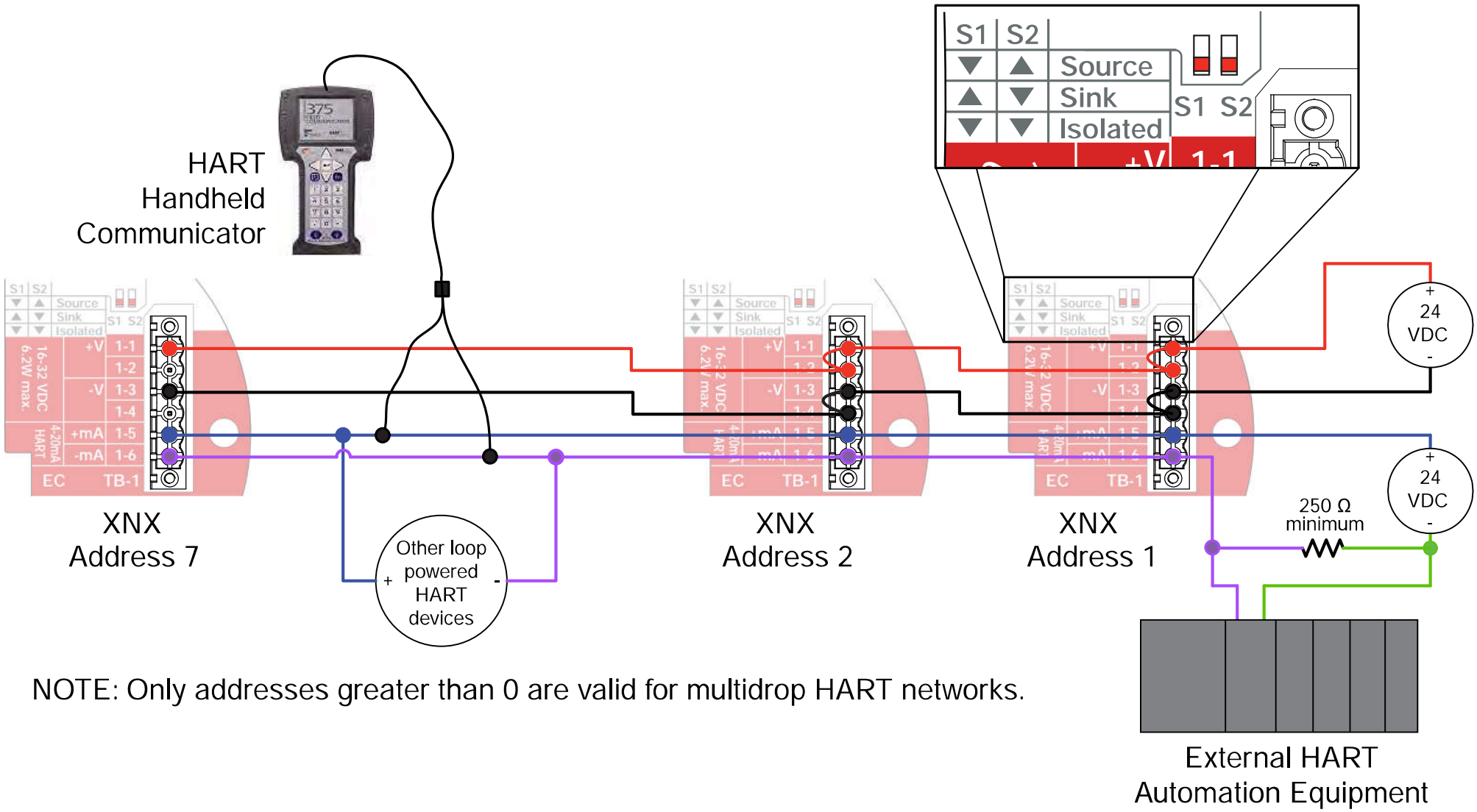

NOTE: Only addresses greater than 0 are valid for multidrop HART networks.

Figure 238. XNX Multidrop HART Network Wiring - Isolated

A.1.2 DevComm PC-based HART Interface

Overview

The XNX-HART interface facilitates remote access to all features of the local user interface including displaying status, testing, calibrating, and configuring. A device descriptor (DD) file is available to adapt standard tools for use with the transmitter.

Warning: After changing parameters with a handheld device, verify that the parameter settings are correct at the transmitter.

The following screens show some of the features of these two interfaces for the XNX transmitter.

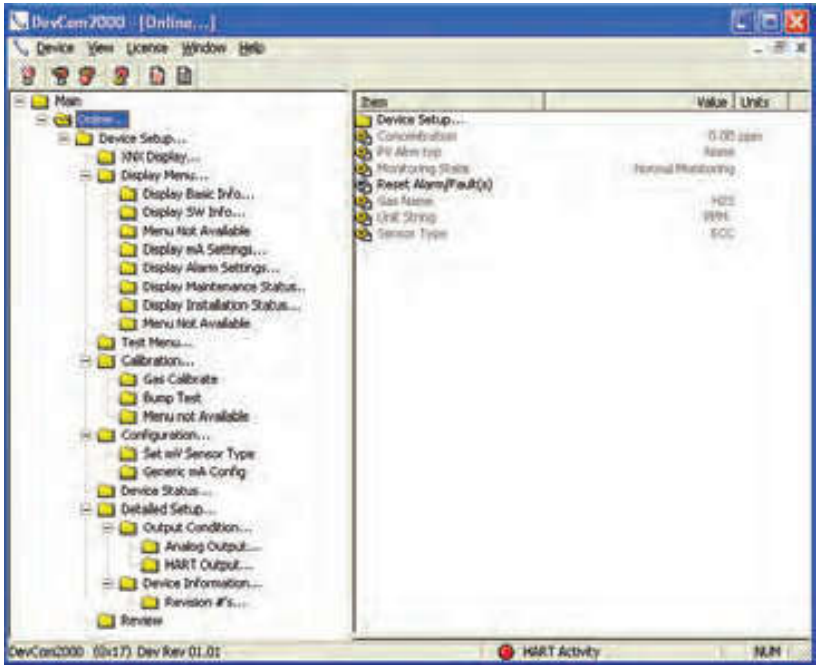

Figure 239. Presentation of XNX Data by DevComm2000



Figure 240. XNX data displayed on an Emerson field communicator

Security level 1 is required to select the display language and to adjust the date and time. All other configuration options require security level 2 access.

Functions in the Configure Menu and the security levels required to change them are explained in this table.

Symbol	Description	Security Level
	Select Language	1
	Set Date & Time	1
	Set mV Sensor Type	2
	Set mA Sensor Type	2
	Gas Selection	2
	Range & Alarms	2
	Latching/Non-latching	2
	Set Units	2
	mA Levels	2

Symbol	Description	Security Level
	Calibration Interval	2
	Accept New Sensor Type	2
	Beam Block Options	2
	Path Length	2
	Unit ID	2
	Relay Options	2
01101	Fieldbus Options	2
	Configure Security	2

Functions

Configuration Summary

All of the HART status information can be extracted from the transmitter as a PDF or text file. This includes voltages, signal strengths, and configuration settings. An example summary, which required only 5 mouse clicks, is shown below.



Figure 241. HART status information

Information Screens

All of the information in the Configuration Summary can be viewed live on various informational displays. For example, alarm settings are shown in Figure 242.



Figure 242. Typical Alarm Settings Display

Event History

The XNX transmitter maintains a record of all significant events. All alarms, all warnings, and all faults are recorded. Additionally, over sixty types of informational events are defined to record important transactions such as recalibrations or configuration changes. One-thousand records are maintained and every event has a timestamp.



Figure 243. HART Event History Display

Test

The test menu provides methods for inhibiting the output, exercising the analog output, or simulating alarms or faults. These methods simplify common tasks by providing a simple user interface.

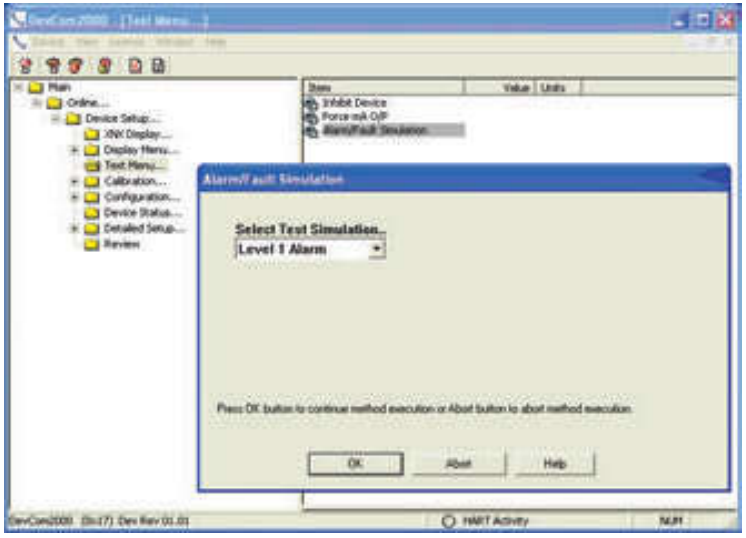

Figure 244. Alarm Simulation

Calibration

The calibration menu permits calibrating zero or span and bump testing. Additionally, when fitted with a Searchline EXCEL sensor, the Calibrate menu displays the optical signal strength for mechanical alignment. The gas calibrate operation is shown below.

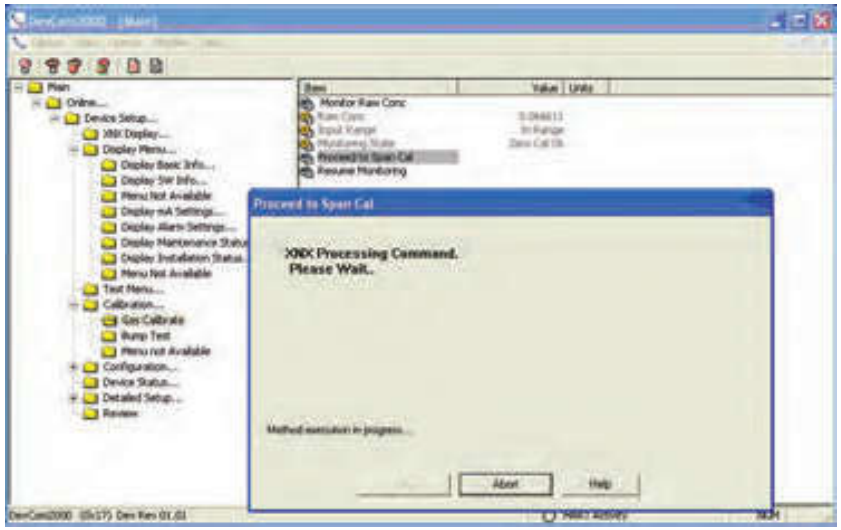

Figure 245. Gas Calibrate Method

Caution: Do not back out of a menu selection while a calibration is in progress.

Configuration

All user settings of the XNX transmitter can be made either at the local user interface or over HART. The configuration menu facilitates convenient setup of alarm levels as shown in Figure 246. Methods are also provided to set time, units, and other parameters.



Figure 246. Set Range and Alarm

Conclusion

The XNX HART interface adds value by facilitating remote operation of Honeywell Analytics gas sensors. All functions available locally are also available over HART.

A.1.3 Handheld Online Menu

When HART communication is established with the XNX, the Root menu is displayed:

Main Menu	Key Sub Menus		
Online... 1 Device Setup 2 Concentration 0.00 %LEL 3 PV Alrm Typ 4 Monitoring State Normal Monitoring 5 Reset Alarm Fault(s) None 6 Gas Name Methane 7 Sensor Type Optima	**Device Setup...** 1 User Login 2 XNX Display... 3 Display Menu... 4 Test Menu... 5 Calibration... 6 Configuration... 7 Device Status... 8 Detailed Setup... 9 Review	**Current Login Level: Default** **Want to change Login Level** 1 Logout [Level 0] 2 Login [level1/2/3] 3 Exit	
Online... 1 Device Setup 2 Concentration 0.00 %LEL 3 PV Alrm Typ 4 Monitoring State Normal Monitoring 5 Reset Alarm Fault(s) None 6 Gas Name Methane 7 Sensor Type Optima	**Device Setup...** 1 User Login 2 XNX Display... 3 Display Menu... 4 Test Menu... 5 Calibration... 6 Configuration... 7 Device Status... 8 Detailed Setup... 9 Review	**XNX Display...** 1 Concentration 0.00 %LEL 2 PV Alrm Typ None 3 Fault/Warn Number F 4 Monitoring State Normal Monitoring 5 Time Date Format mm/dd/yy hh:mm:ss 6 Time Date Stamp 09/18/08 11:57:57 7 Gas Name Methane LEL	
Online... 1 Device Setup 2 Concentration 0.00 %LEL 3 PV Alrm Typ 4 Monitoring State Normal Monitoring 5 Reset Alarm Fault(s) None 6 Gas Name Methane 7 Sensor Type Optima	**Device Setup...** 1 User Login 2 XNX Display... 3 Display Menu... 4 Test Menu... 5 Calibration... 6 Configuration... 7 Device Status... 8 Detailed Setup... 9 Review	**Display Menu...** 1 Reset Alarm Faults 2 Event History 3 Display Basic Info... 4 Display SW Info... 5 Display Optical Performance 6 Display mA Settings 7 Display Alarm Settings 8 Display Maintenance Status 9 Display Installation Status	**Display Basic Info...** 1 Gas Name Methane LEL 2 XNX ID SOUTH TOWER

XNX HART Basic Menus

Main Menu	Key Sub Menus		
Online... 1 Device Setup 2 Concentration 0.00 %LEL 3 PV Alrm Typ 4 Monitoring State Normal Monitoring 5 Reset Alarm Fault(s) None 6 Gas Name Methane 7 Sensor Type Optima	**Device Setup...** 1 User Login 2 XNX Display... 3 Display Menu... 4 Test Menu... 5 Calibration... 6 Configuration... 7 Device Status... 8 Detailed Setup... 9 Review	**Display Menu...** 1 Reset Alarm Faults 2 Event History 3 Display Basic Info... 4 Display SW Info... 5 Display Optical Performance 6 Display mA Settings 7 Display Alarm Settings 8 Display Maintenance Status 9 Display Installation Status	**Display SW Info...** 1 Dev id 1081234 2 Fld dev rev 1 3 Sensor S/w Ver 48 4 Sensor s/n 0 5 Gas Name Methane LEL 6 XNX ID SOUTH TOWER
Online... 1 Device Setup 2 Concentration 0.00 %LEL 3 PV Alrm Typ 4 Monitoring State Normal Monitoring 5 Reset Alarm Fault(s) None 6 Gas Name Methane 7 Sensor Type Optima	**Device Setup...** 1 User Login 2 XNX Display... 3 Display Menu... 4 Test Menu... 5 Calibration... 6 Configuration... 7 Device Status... 8 Detailed Setup... 9 Review	**Display Menu...** 1 Reset Alarm Faults 2 Event History 3 Display Basic Info... 4 Display SW Info... 5 Display Optical Performance 6 Display mA Settings 7 Display Alarm Settings 8 Display Maintenance Status 9 Display Installation Status	**Display Optical Performance...** 1 Signal Strength 0.96 2 Ref Sig Strength 1.12 3 Sam Sig Strength 1.06 4 Baseline 0.92 5 Dynamic Reserve 96 % 6 Window Temp 28 degC

XNX HART Basic Menus (cont'd)

Main Menu	Key Sub Menus		
Online... 1 Device Setup 2 Concentration 0.00 %LEL 3 PV Alrm Typ 4 Monitoring State Normal Monitoring 5 Reset Alarm Fault(s) None 6 Gas Name Methane 7 Sensor Type Optima	**Device Setup...** 1 User Login 2 XNX Display... 3 Display Menu... 4 Test Menu... 5 Calibration... 6 Configuration... 7 Device Status... 8 Detailed Setup... 9 Review	**Display Menu...** 1 Reset Alarm Faults 2 Event History 3 Display Basic Info... 4 Display SW Info... 5 Display Optical Performance 6 Display mA Settings 7 Display Alarm Settings 8 Display Maintenance Status 9 Display Installation Status	**Display mA Settings...** 1 Overrange Current 21 mA 2 Warning Current 3 mA 3 Inhibit Current 2 mA
Online... 1 Device Setup 2 Concentration 0.00 %LEL 3 PV Alrm Typ 4 Monitoring State Normal Monitoring 5 Reset Alarm Fault(s) None 6 Gas Name Methane 7 Sensor Type Optima	**Device Setup...** 1 User Login 2 XNX Display... 3 Display Menu... 4 Test Menu... 5 Calibration... 6 Configuration... 7 Device Status... 8 Detailed Setup... 9 Review	**Display Menu...** 1 Reset Alarm Faults 2 Event History 3 Display Basic Info... 4 Display SW Info... 5 Display Optical Performance 6 Display mA Settings 7 Display Alarm Settings 8 Display Maintenance Status 9 Display Installation Status	**Display Alarm Settings...** 1 PV URV 100.000 %LEL 2 PV LRV 0.000 %LEL 2 Alarm Thresholds 1 20 %LEL 3 Alarm Thresholds 2 40 %LEL 4 Alarm Config 0x0C 5 Board Type Modbus/RTU Interf...
Online... 1 Device Setup 2 Concentration 0.00 %LEL 3 PV Alrm Typ 4 Monitoring State Normal Monitoring 5 Reset Alarm Fault(s) None 6 Gas Name Methane 7 Sensor Type Optima	**Device Setup...** 1 User Login 2 XNX Display... 3 Display Menu... 4 Test Menu... 5 Calibration... 6 Configuration... 7 Device Status... 8 Detailed Setup... 9 Review	**Display Menu...** 1 Reset Alarm Faults 2 Event History 3 Display Basic Info... 4 Display SW Info... 5 Display Optical Performance 6 Display mA Settings 7 Display Alarm Settings 8 Display Maintenance Status 9 Display Installation Status	**Display Maintenance Status..** 1 Sensor Type ECC 2 Sensor Life 0 Hours

XNX HART Basic Menus (cont'd)

Main Menu	Key Sub Menus		
Online... 1 Device Setup 2 Concentration 0.00 %LEL 3 PV Alrm Typ 4 Monitoring State Normal Monitoring 5 Reset Alarm Fault(s) None 6 Gas Name Methane 7 Sensor Type Optima	**Device Setup...** 1 User Login 2 XNX Display... 3 Display Menu... 4 Test Menu... 5 Calibration... 6 Configuration... 7 Device Status... 8 Detailed Setup... 9 Review	**Display Menu...** 1 Reset Alarm Faults 2 Event History 3 Display Basic Info... 4 Display SW Info... 5 Display Optical Performance 6 Display mA Settings 7 Display Alarm Settings 8 Display Maintenance Status 9 Display Installation Status	**Display Installation Status...** 1 Power Supply Volt... 19403 mVolt 2 Operating Voltage 3297 mVolt 3 Sensor I/P Voltage 0 mVolt 4 Sensor Voltage 0 mVolt 5 XNX Temp 33 degC 6 Sensor Temp 41 degC 7 Loop current 4.000 mA
Online... 1 Device Setup 2 Concentration 0.00 %LEL 3 PV Alrm Typ 4 Monitoring State Normal Monitoring 5 Reset Alarm Fault(s) None 6 Gas Name Methane 7 Sensor Type Optima	**Device Setup...** 1 User Login 2 XNX Display... 3 Display Menu... 4 Test Menu... 5 Calibration... 6 Configuration... 7 Device Status... 8 Detailed Setup... 9 Review	**Test Menu...** 1 Inhibit Long-term 2 Force mA O/P 3 Alarm/Fault Simulation	

XNX HART Basic Menus (cont'd)

Main Menu	Key Sub Menus		
Online... 1 Device Setup 2 Concentration 0.00 %LEL 3 PV Alrm Typ 4 Monitoring State Normal Monitoring 5 Reset Alarm Fault(s) None 6 Gas Name Methane 7 Sensor Type Optima	**Device Setup...** 1 User Login 2 XNX Display... 3 Display Menu... 4 Test Menu... 5 Calibration... 6 Configuration... 7 Device Status... 8 Detailed Setup... 9 Review	**Calibration...** 1 Gas Calibrn 2 Bump Test 3 Calibrate mA Offset 4 Soft Reset 5 Align Excel	
Online... 1 Device Setup 2 Concentration 0.00 %LEL 3 PV Alrm Typ 4 Monitoring State Normal Monitoring 5 Reset Alarm Fault(s) None 6 Gas Name Methane 7 Sensor Type Optima	**Device Setup...** 1 User Login 2 XNX Display... 3 Display Menu... 4 Test Menu... 5 Calibration... 6 Configuration... 7 Device Status... 8 Detailed Setup... 9 Review	**Configuration...** 1 Config Security 2 Measure as mg/m3 3 Set Range & Alarm 4 Config Alarm Mode 5 Fieldbus Option 6 Set mV Sensor Type 7 Gas Selection 8 Config mA Status L... 9 Set Calibrn Interval XNX ID SOUTH TOWER Conc Unit %LEL Time Date Format mm/dd/yy hh:mm:ss Set Date-Time	

XNX HART Basic Menus (cont'd)

Main Menu	Key Sub Menus		
Online... 1 Device Setup 2 Concentration 0.00 %LEL 3 PV Alrm Typ 4 Monitoring State Normal Monitoring 5 Reset Alarm Fault(s) None 6 Gas Name Methane 7 Sensor Type Optima	**Device Setup...** 1 User Login 2 XNX Display... 3 Display Menu... 4 Test Menu... 5 Calibration... 6 Configuration... 7 Device Status... 8 Detailed Setup... 9 Review	**Detailed Setup...** 1 Output Condition... 2 Device Information...	
Online... 1 Device Setup 2 Concentration 0.00 %LEL 3 PV Alrm Typ 4 Monitoring State Normal Monitoring 5 Reset Alarm Fault(s) None 6 Gas Name Methane 7 Sensor Type Optima	**Device Setup...** 1 User Login 2 XNX Display... 3 Display Menu... 4 Test Menu... 5 Calibration... 6 Configuration... 7 Device Status... 8 Detailed Setup... 9 Review	**Review** 1 Manufacturer Honeywell 2 Model XNX 3 Sensor Type Optima 4 PV %LEL 5 Info Min Range 100.00 %LEL 6 Info Max Range 100.00 %LEL 7 PV % Range 0.000 % 8 PV Xfer fnctn Linear 9 PV 4.000 mA PV Alrm typ None Tag S. TOWER Long tag Descriptor SOUTH TOWER Message CRACKING TOWER Final asmbly num 0 Dev id 1081234 Universal rev 6 Fld dev rev 1 Software rev 38 Poll addr 0 Loop Curnt Mode Enabled Cfg chng count 6 Num req preams 9 Num resp preams 7	

XNX HART Basic Menus (cont'd)

Honeywell

Appendix B - Modbus® Protocol

B.1 Modbus and the XNX transmitter

The XNX® gas sensor may be fitted with the optional Modbus® interface card (P/N XNX-MB). Authoritative information on the Modbus protocol can be found at www.modbus.org. The XNX supports Modbus/RTU over an RS-485 physical layer. The interface is isolated and includes a switchable 120 Ohm termination resistor. Baud rates from 1200 to 38,400 are supported with 19,200 as the default (8 data bits, even parity, 1 stop bit).

Most of the operations that are possible with the HART® and local user interfaces can also be performed using the Modbus interface. This includes test, calibration and configuration operations. This appendix describes only how to monitor XNX status using Modbus.

The zero calibration procedure should be performed prior to the span calibration. The calibration procedure is in Section 3.2.1.

Some of the relevant Modbus holding registers are listed in the following table. In most installations, the XNX transmitter reads only the first five registers (four data). The assignment of the first eight registers (or six data) is identical to the Honeywell Analytics XCD gas sensor.

Building an effective Modbus automatic gas detection system requires checking for faults (using iFaultWarnNumber or iAlmFltLev) and checking iMonitoringState to confirm that the XNX is not inhibited or in calibration. The pseudo code example in Figure 247 suggests computation that should be made in external automation equipment.

See Section 2.3.4 for information on installing the optional Modbus hardware. See Section 2.5.1 for information on setting the Modbus baud rate and address using the local user interface. See Section A.1.1 for information on setting the Modbus parameters using the HART interface.

```
if(
       ((fCurrentConc < TLV) or (iAlmFltLev &  3 == 0))
// low concentration
       and
       ((iFaultWarnNumber < 1000) or (iAlmFltLev & 64 == 0))
// no fault
       and
     ((iMonitoringState == 1) or (iMonitoringState == 7))
// not inhibited
     and
     (
        (Transport layer SW indicates good Comm.)
         or
        (iHeartBeat changes every 5 seconds)
     )                // Modbus link healthy
  ) Then the area is safe.
```

Figure 247. Modbus Pseudo Code Example

Modbus connections are shown in the flollowing figure.

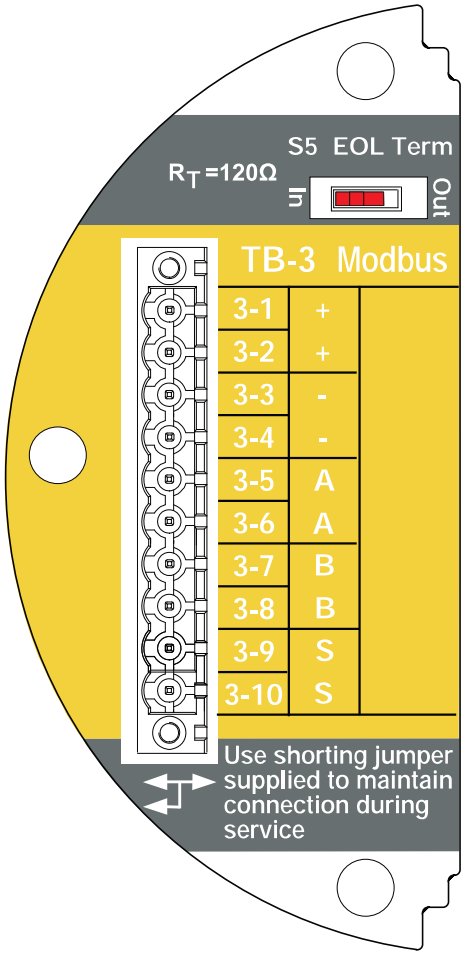

Figure 248. Modbus connections

B.2 Modbus Registers

Modbus Holding Register Address	Datatype	Variable Name	Description
40001	Int16	ID	MSB always 0x24 to facilitate automatic identification. LSB repeat of Modbus address.
40002	Int16	ID	Identical to 40001
40003 to 40004	Float32	fCurrentConc	The reported gas concentration in current measurement units. For example, methane at 50% LEL would be reported as 50.0 here. This concentration is forced to zero during inhibit mode.
40005	int16	iFaultWarnNumber	This is the integer representation of the fault status. If any fault exists this will take a value in the range 1000 to 1999. Otherwise, if any warning exists, this will take a value in the range 1 to 999. Normally, this has the value zero. For example, if the XNX temperature is out of range, this will take the value 1103.
40006	int8	iAlmFltLev	This register contains 4 meaningful bits regarding the presence of alarms or faults. The bit assignments are as follows: Bit 0: AL1 active Bit 1: AL2 active Bit 4: Warning active Bit 6: Fault Active All others: For future expansion

Modbus Holding Register Address	Datatype	Variable Name	Description
40007	uint8	iMonitoringState	This has the following meanings: 0 reserved 1 normal monitoring 2 in warm-up 3 long-term inhibit 4 alarm simulation 5 fault simulation 6 Loop current stimulated 7 in warning MFlt 8 in Instrument Flt 9 in beam block 10 in bump test 11 short-term inhibit 12 performing zero calibration 13 performing span calibration 14 in pre-zero calibration 15 in pre-span calibration 16 in post-zero calibration, successful 17 in post-span calibration, successful 18 in post-zero calibration, failed 19 in post-span calibration, failed 20 in align Excel mode 21-255 for future expansion
40008	int16	iHeartBeat	This Heartbeat is provided to facilitate detection of communications problems in programming environments where the transport-layer communication error information is unavailable. This increments approximately every 5 seconds. It is the responsibility of the system integrator to notify plant personnel if a Modbus master fails to communicate with the XNX. This register can facilitate this notification.
40009 to 40010	float32	fSensorLifeDays	This indicates the time remaining before the ECC sensor must be calibrated or replaced.

Modbus Holding Register Address	Datatype	Variable Name	Description
40011	int8	iMeasurementUnits	The meaning of this datum is as enumerated below: 0 Default 1 mg/m3 2 g/m3 3 %vol 4 ppm 5 %LEL 6 UEG 7 Ratio 8 %LEL*M 9 ppm*m 10 EG*m 11 %vol * meter 12 to 255 for future expansion
40012 to 40014	string[5]	strGenericUnits	User-defined 5 character string description for installed generic mA sensor
40015	int8	iWinTemp	If a Searchline Excel is fitted, this is the temperature of the window. Otherwise, this is the temperature of the window.
40016	int8	iTransTemp	Temperature of the XNX in Celcius.
40017	int8	iSensorTemp	Temperature of the sensor (Optima, Excel, ECC, etc)
40018 to 40026	string[18]	strTransmitterID	User-configured transmitter name.
40027 to 40035	string[18]	sDateTime	Format is “mm/dd/yy hh:mm:ss”. Month and day inverted if so configured.
40036	int8	iSensorType	The meaning of this datum is as enumerated below 1 mV Bridge 2 Electrochemical Cell with toxic cartridge 3 Electrochemical Cell with O2 cartridge 4 Optima 5 Excel 7 generic mA input Others for future expansion
40037	float32	f_mA_Out	The current produced by the XNX in milliamperes.

Modbus Holding Register Address	Datatype	Variable Name	Description
40038	int16	iTransVoltage24000	The voltage supplied to the XNX at the nominal 24.0 volt input, in millivolts.
40039	int16	iTransVoltage_3300	The voltage on a nominal 3.3 volt supply in the XNX, in millivolts.
40041	int16	iOptional3300	The voltage on a nominal 3.3 volt supply in the XNX option board, in millivolts.
40042	int16	iPersonality3300	The voltage on a nominal 3.3 volt supply in the XNX personality board, in millivolts.
40043	int16	iPersonality5000	The voltage on a nominal 5.0 volt supply in the XNX personality board, in millivolts.
40044	int16	iSensVoltage24000	The voltage supplied to an Optima or Excel sensor at the nominal 24.0 volt input, in millivolts.
40045	int16	iSensVoltage_5000	The voltage on a nominal 5.0 volt supply in Optima or Excel, in millivolts.
40046 to 40079	Contact HA for details.		
40080 to 40081	int32	iTransSn	Serial number of XNX.
40082 to 40083	int32	iSensSn	Serial number of Optima, Excel, or ECC cartridge.
40084	int8	iSensSwVer	Integer representation of software version in external sensor or mV personality module
40085	int8	iTransSwVer	Software version of XNX.
40086 to 40155	Contact HA for details.		

Appendix C - Warranty

Warranty Statement

All products are designed and manufactured to the latest internationally recognized standards by Honeywell Analytics under a Quality Management System that is certified to ISO 9001.

The XNX® Universal Transmitter is warranted by Honeywell Analytics (herein referred to as 'HA') to be free from defects in material or workmanship under normal use and service for:

Device	Warranty Terms
XNX Universal Transmitter (excludes consumables)	**36 months** from date of shipment to buyer
XNX Electrochemical Sensors (Part Number XNX-XS****) **Multi-Purpose Detector (MPD)**	**12 months** from date of commissioning by an approved Honeywell Analytics representative or **18 months** from date of shipment from Honeywell Analytics, whichever is sooner

Service in the field or at the customer's premises is not covered under these warranty terms. Time and travel expenses for on-site warranty services will be charged at Honeywell Analytics' normal billing rates. Contact your Honeywell Analytics Service Representative for information on Service Contracts.

Warranty Conditions

1. The Honeywell Analytics (HA) Limited Product Warranty only extends to the sale of new and unused products to the original buyer where purchased from HA or from a HA authorized distributor, dealer or representative. Not covered are: consumable items such as dry-cell batteries, filters and fuses or routine replacement parts due to the normal wear and tear of the product; any product which in HA's opinion has been altered, neglected, misused or damaged by accident or abnormal conditions of operation, handling, use or severe sensor poisoning; defects attributable to improper installation, repair by an unauthorized person or the use of unauthorized accessories/parts on the product
2. Any claim under the HA Product Warranty must be made within the warranty period and as soon as reasonably possible after a defect is discovered. If a Warranty claim is being sought it is the responsibility of the buyer to obtain a Service Event number (SE#) from HA and if practical return the product clearly marked with the SE# and a full description of the fault.
3. HA, at its sole discretion, may elect to send replacement goods to buyer prior to receipt of the defective goods. Buyer agrees to return defective goods with in 30 days or to pay for the replacement goods.
4. Buyer is responsible for transportation costs from the buyer's location to HA. HA is responsible for transportation costs from HA's location to the buyer.
5. If in the case of a fixed installation or when it is not practical to return the product, the buyer should submit a claim to HA Service Department. A service engineer will attend on site on a day rate basis. Where a valid warranty claim is identified, the faulty product will be repaired or replaced free of charge. A warranty claim will be accepted if all conditions contained within this Warranty are met.
6. When, in the opinion of HA, a warranty claim is valid, HA will repair or replace the defective product free of charge and send it or any replacement back to the buyer. If, in the opinion of HA the warranty claim is not valid, HA will, at the option of the buyer, return the unit unaltered at the buyer's expense, repair the unit at the then prevailing rates, replace the unit with an appropriate replacement item at the then prevailing price, or discard the unit. HA reserves the right to charge for any attendance by its service engineer at the usual rates in force at the time the claim was received.
7. In no event shall HA's liability exceed the original purchase price paid by the buyer for the product.

Consumer Claims

If you purchased your HA product as a consumer, the above warranty conditions do not affect your rights under any applicable consumer protection legislation.

Honeywell Analytics reserves the right to change this policy at any time. Contact Honeywell Analytics for current warranty information.

Index

Symbols

4-20mA output 11, 37, 38
705, calibrating 94
705HT, calibrating 94

A

accessories 156
air speed, operating 132
alarm/fault simulation 81
alarm/fault status 83
alarms 67
alarm settings 83
approvals,
  hazardous area 129
  performance 129

B

battery life 128
baud rate 184
beam block options 72
bump test 22, 99, 100

C

cable
  length 52
  ports 128
  recommended 132
cal gas range 134, 135, 133
Calibration 93–106
calibration
  for MPD sensors 101
  gas 90
  gas flow adapter 15, 156
  interval 71
  span 90, 91
  zero 90, 91
cal point 130, 131, 133
cartridges
  catalytic bead replacement 155
  IR replacement 155
  part numbers 130, 131, 133
Cautions 7
ceiling mount bracket kit 16, 156
cells, replacement 154
certifications 11, 12
  by part number series 145–147
chronological list, event, by day 88
collecting cone 16, 157
Communications 11
configuration
  displaying 22
  verifying 79
configure menu 61
construction material 128
Control Drawings 159–166
  remote sensor mount 165
controls 18
cover 12
cross-interferents 141

D

daisy-chain 32
date 22, 58, 81
dimensions 128
duct mount kit 16, 156

E

easy reset 78
EC. See *electrochemical sensor*
electrochemical sensor 40
  cartridge, replacing with different type 106
  cartridge, replacing with same type 105
  cell 105
  installation 40
  operational life 98
enclosure
  aluminum 12
  stainless steel 12
event history 81, 87

F

fieldbus
  options 77
  settings 83, 86
finish, marine 12
flow housing 97
force relays 80, 81
Foundation Fieldbus 54
functional gas test. See *bump test*

G

gas calibration 22, 90
gas data 83, 85
gases, selectable 61
gas name, changing 61
general status screen 19, 55
greases, airborne 141

H

H_2S sensors, calibrating 94
HART®
  devices 52
  handheld online menu 1751–179
  interface 167–169
  local 14
  local handheld 51
  output 11
  protocol 51, 167–182
hex key 13
humidity 1284, 130, 131, 133
hydrogen sensors 142

I

information 7
information menu 83
inhibit 79
Installation and Operation 27–88
installation
  daisy-chain 31, 32
  maximum distance 31, 33
  multiple transmitter 31
  single transmitter 31
  types of 31
intrinsic safety 5, 14
Introduction 9–26
IP rating 1284, 130
IS. See *intrinsic safety*

J

jumpers 38
jumper switch 54

L

language 22
  selecting 57
latching 69
LCD. See *liquid crystal display*
LDL. See *lower detection limit*
LED. See *light emitting diode*
light emitting diode 18, 20, 56
  test 56
liquid crystal display 46, 56
lower detection limit 130, 131, 133

M

magnetic wand/screwdriver 13, 17, 158
main menu 22
Maintenance 103–106
mA devices
  generic, connecting 47
  mA levels 70
mA
  level settings 83, 86
  output, calibrating 90, 100
  output, forcing 80
  sensor type 60
menu map 23
menu structure 20
messages
  fault 113–119
  informational 123–124
  warning 1084–1117
Modbus® 15, 54
  interface card 184
  protocol 183–188
  registers 186–189
mounting kit, EC sensor remote 41
mounting the enclosure 128
MPD. See *multi-purpose detector*
multi-purpose detector 155
  flammable sensor 98
  interface adapter 156
  performance 142
  sensor cartridge 104
multidrop mode 52
mV
  personality wiring 43
  remote sensor 45

N

navigation 18
non-latching. See *latching*
notes 7
numeric format, selecting 69

O

off-scale readings 5
operating voltage 128
option board 38, 54
ordering information 152
organic vapors 141
O-ring, front cover 158

P

part numbers 83
parts list 13
passcode screens 79
personality board 36, 38
  IR 48
  mV 42, 44
personality, options, and display (POD) 14, 36
personality wiring
  electrochemical 39
  IR 46, 48
pipe mount kit 15, 154
POD. See *personality, options, and display*
point-to-point mode 51
power consumption 128
pressure
  barometric 130, 131, 134
  operating 132
product description 10, 12

R

range 67, 130, 131, 133
range/alarm settings 83, 85
real time clock 128
Reflex cell fault diagnosis 10
relay
  data 86
  options 14, 53
  settings 83
remote
  sensor mounting kit 16, 156
  gassing kit 16, 157
  MPD mounting 157
response time 130, 131, 133

S

Safety 5–8
screwdriver 158
Searchline Excel 50, 56, 96
  connecting 46
Searchpoint Optima Plus 50
  connecting 46
security access level 59
security, configuring 78
Sensepoint HT, calibrating 94
sensors 14–26
  cross-sensitivity 135–141
  data 83, 85
  location 28
  mounting 28
  performance 133
  replacement 153
  status 83, 85
  types 59, 72
serial number 83
settings, displaying 22
shorting jumpers 157
signal 128
silicone compounds 141
simulation switch 38, 54
soft reset 101, 102
solvents 141
spares 156
Specifications 127-158
stopping plugs 12, 158
switch configuration 37
system conditioning 142

T

temperature 128, 130
  ranges, extended 134
  range, standard 134
terminal blocks 38, 54
  connections 38
  jumpers 157
  pluggable 158
termination 128
test menu 79
time 22, 58, 83
transmitter
  configuring 57
  data 83, 84
  information, displaying 21
  status 83, 83
  testing 22

U

units name, changing 61
units, setting 70
user interface 128

W

warm-up time 132
Warnings 5
Warnings and Faults 107–126
warranty 191–192
weatherproof cap 16, 157
weather protector 17, 157
weight 128
wiring 30
  isolated 37

X

XNX front panel 17

Z

zero calibration 184

Find out more
www.honeywellanalytics.com

Americas
Honeywell Analytics
405 Barclay Boulevard
Lincolnshire, IL 60069
Tel: +1 847 955 8200
Toll free: +1 800 538 0363
Fax: +1 847 955 8208
detectgas@honeywell.com

Asia Pacific
#508, Kolon Science Valley (I)
187-10 Guro-Dong, Guro-Gu
Seoul, 152-050
Korea
Tel: +82 (0)2 6909 0307
Fax: +82 (0)2 2025 0328
analytics.ap@honeywell.com

Europe, Middle East, and Africa
Life Safety Distribution AG
Javastrasse 2
8604 Hegnau
Switzerland
Tel: +41 (0)1 943 4300
Fax: +41 (0)1 943 4398
Tel: +41 (0)1 943 4300
Fax: +41 (0)1 943 4398
gasdetection@honeywell.com

Technical Services
ha.global.service@honeywell.com

www.honeywell.com

Please Note:
While every effort has been made to ensure accuracy in this publication, no responsibility can be accepted for errors or omissions.
Data may change, as well as legislation, and you are strongly advised to obtain copies of the most recently issued regulations, standards and guidelines.
This publication is not intended to form the basis of a contract.

Honeywell

1998M0738 Revision 12
June 2015

© 2015 Honeywell Analytics

Overview

The AdaptaBeacon line of flashing or steady lights is designed to give a visual indication or provide a supplementary audible warning sound depending on the model selected. The cast zinc base may also double for use as a junction box. 120 and 240VAC beacons are CSA certified.

Shatter resistant Lexan® lenses and domes. Stainless steel clamp rings. Easy lamp replacement with bayonet base type bulbs. Special optics in the impact resistant Lexan lenses ensure light is efficiently dispersed. Available in six colors: red, amber, blue, green, magenta or clear.

Applications

These lights are particularly effective in high noise level areas, especially where ear protection must be worn and audible signals may not be heard or misunderstood. They can advise personnel in manufacturing and process areas when an operation is starting or stopping. They can signal malfunctions in equipment, such as assembly line jams, or blocked ventilator. They can warn personnel that they are entering a restricted area or an area of high danger.

Installation

For indoor installation it can be mounted in any direction. For weatherproof and outdoor installation lens must face directly up. A standard base design allows installation directly to surface or to a 4" octagon box or on a 1/2" NPT conduit.

Standard Features

- **CSA Certified (120 and 240VAC models only)**
- **Weatherproof -35°C to +66°C (-31°F to 150°F)**
- **Three styles to choose from:**
  - Flashing or Steady Light
  - Flashing Light with Horn
  - Flashing Light with Protective Dome Cover
- **Direct or pipe mounting or mounting on a 4" octagon box**

50CSIN Steady Beacon Light

Direct or Pipe Mount - 120VAC

When activated, provides a continuous on visual alarm indication.

49C Flashing Beacon Light

with Protective Dome Cover - Direct or Pipe Mount - 120 or 240VAC

Flashing light with protective acrylic dome cover provides easy cleaning in dusty or sooty environments.

50C Flashing Beacon Light

Direct or Pipe Mount - 24/120/240VAC

Same features as the 49C less protective Dome.

51C Flashing Beacon Light

with Warning Horn - Direct or Pipe Mount 12Vdc, 24Vdc, 24VAC, 120VAC

Combines low cost, flashing light with self contained base mounted flashing warning horn, rated at 85dB at 10 feet. Ideally suited for signalling the stoppage of equipment, or pinpointing a problem location.

51XBR Flashing LED Beacon Light

Edwards 51XBR Series XTRA-BRITETM LED beacons are combination visual and audible signaling devices, designed for indoor or outdoor applications. The integrated horn is synchronized with the flashing LED light source. The unit features a cast metal base that can be used as a junction box. The double fresnel lens is made of shatter-resistant poly carbonate, and is designed to magnify the superbright LED light source.

50C Series Flashing Light and 50CSIN Series Steady Light



51C/51XBR Series Flashing Light with Horn

AdaptaBeacon® Steady On and Flashing Lights

49C, 50C, 51C, and 51XBR Series

49C Series Flashing Light with Protective Dome Cover

CONTINUES...

EDWARDS

Steady On and Flashing Lights

CONTINUED...

Ordering Information

Description	Cat. No.	Repl. Lens	Cat. No. Dome Cover	Nom. Amp Rating	Voltage	Mounting
Steady light	50CSIN(+)-N5-40WH	92L(+)	--	.28	120VAC*	
Flashing light with protective dust cover flash rate = 60 FPM	49C(+)-R5	92L(+)	52LC	.10	240VAC*	
	49C(+)-N5-40WH	92L(+)	52LC	.26	120VAC*	
Flashing light flash rate = 60 FPM	50C(+)-R5	92L(+)	--	.10	240VAC*	**1.** Direct surface (indoor installation only)
	50C(+)-N5-40WH	92L(+)	--	.26	120VAC*	
	50C(+)-G5-20WH	92L(+)	--	.90	24VAC*	**2.** Mounting on a 4" octagon box (indoor installation only)
Flashing light with warning horn flash rate = 60 FPM	51C(+)-N5-40W	92L(+)	--	.29	120VAC*	
	51C(+)-G5-20W	92L(+)	--	1.1	24VAC*	**3.** Mounting on 1/2" conduit (indoor or outdoor installation)
	51C(+)-G1	92L(+)	--	1.1	24Vdc	
	51C(+)-E1	92L(+)	--	1.0	12Vdc	
Flashing LED light with warning horn flash rate = 65 FPM	51XBRF(+)120A	92L(+)	--	.175	120VAC	
	51XBRF(+)24D	92L(+)	--	.275	24Vdc	

(+) Specify color: R=Red, A=Amber, B=Blue, G=Green, C=Clear, M=Magenta
* 50/60 Hz

Installation and Mounting

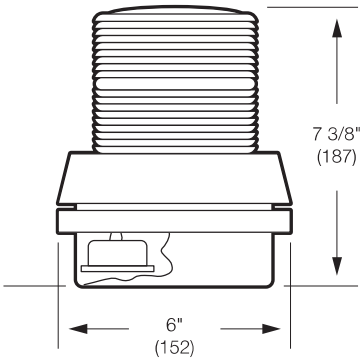

51C/51XBR Series
Flashing light
w/warning horn direct
or pipe mount

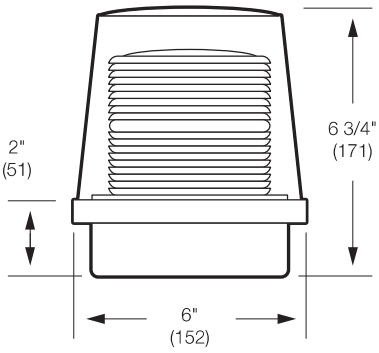

49C Series
Flashing light
w/protective dome

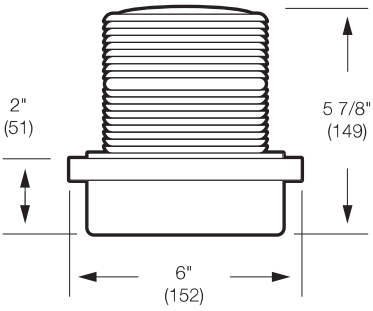

50C Series
Flashing or steady light
direct or pipe mount

Section 3.7.11

Odor Control Units

OPERATION & MAINTENANCE MANUAL

VENTSORB® PE ODOR CONTROL SYSTEM
(2) VSPE-200-T

FOR
H2FLOW EQUIPMENT INC.

PREPARED BY
CONTINENTAL CARBON GROUP
STONEY CREEK, ON

CONTINENTAL CARBON SALES ORDER NUMBER: SO-11475
CUSTOMER PURCHASE ORDER NUMBER: PO-0589-22
DATE: JUNE 2022

THIS MANUAL IS THE PROPERTY OF CONTINENTAL CARBON GROUP AND IS NOT TO BE REPRODUCED IN WHOLE OR PART, NOR EMPLOYED FOR ANY PURPOSE OTHER THAN SPECIFICALLY PERMITTED IN WRITING BY CONTINENTAL CARBON GROUP.

SAFETY DEPENDS ON YOU

Continental Carbon Group's equipment is designed and built with safety in mind. However, proper installation and operation can increase your overall safety.

DO NOT INSTALL, OPERATE OR REPAIR THIS EQUIPMENT WITHOUT READING THIS MANUAL AND THE SAFETY PRECAUTIONS CONTAINED THROUGHOUT.

BE SURE THAT ALL INSTALLATION, OPERATION, MAINTENANCE AND REPAIR PROCEDURES ARE PERFORMED ONLY BY QUALIFIED INDIVIDUALS.

QUESTIONS? Call Continental Carbon Group at 1-905-643-7615

SAFETY HIGHLIGHTS

READ AND UNDERSTAND THE FOLLOWING SAFETY HIGHLIGHTS.

⚠ WARNING

This statement appears where the information must be followed exactly to avoid serious personal injury or loss of life

⚠ CAUTION

This statement appears where the information must be followed exactly to avoid minor personal injury or damage to equipment.

TABLE OF CONTENTS

- **SECTION 1 – GENERAL INFORMATION**
- **SECTION 2 – INSTALLATION AND OPERATION**
- **SECTION 3 – CARBON INFORMATION**
- **SECTION 4 – EQUIPMENT/PARTS DATA**
- **SECTION 5 – DRAWINGS**

Continental Carbon Group

SECTION 1

GENERAL INFORMATION

SECTION 1 – GENERAL INFORMATION

INTRODUCTION

This manual is intended to serve as a reference guide for the operation of the Ventsorb PE Emission Control System. Continental Carbon Group advises operators to read through the manual to become familiar with the equipment and its safe operation. Careful consideration should be given to:

- Section 2 -- Installation and Operation
- Section 3 -- Carbon Information

This system is designed for the removal of noxious, unhealthy or unpleasant odors and organic chemical emissions emanating from a variety of sources. If solvent type compounds are known to be present in the air stream, problems related to polyethelene and polypropylene materials of construction may result. The Continental Carbon Technical Sales Representative or Local Sales Agent should be consulted prior to operation. The phone numbers are provided in the Contact Information Section.

EQUIPMENT DESCRIPTION

Continental Carbon Group offers the Ventsorb PE in three typical configurations: Canister only, Skid mounted with fan, and Top Fan Mounted. Please consult your purchase order along with the drawing at the end of this manual for the specific equipment purchased.

The system is shipped, less carbon, and ready for installation. The Ventsorb is fabricated from high density polyethylene (HDPE). The canister inlet nozzle and outlet nozzle are 4” FNPT (with the option of providing a flange or a Rain Tee). A drain/fill fitting and regeneration water overflow fitting are set into the canister sidewall.

A centrifugal blower, (if provided by CCG), can either be installed upstream of the canister or mounted on top of the canister to provide source air to the carbon bed.

CONTINENTAL CARBON GROUP ♦ COPYRIGHT 2022 ♦ ALL RIGHTS RESERVED

HIGH FLOW SERIES and VENTSORB® PE
Odor Control Systems

HIGH FLOW and VENTSORB® PE Design Data

Model	Air Flow Capacity Range cfm(m^3/hr)	Carbon Capacity ft^3 (m^3)	Carbon Bed Depth feet (meters)	System Dimensions[1] (LxWxH) feet (meters)	System Weight[2] (Maximum) pounds (kg)	System Pressure Drop[3] inches WC (N/m^2)	Fan Horsepower[3] HP
HIGH FLOW Stand Alone Canisters							
HF-400 C	200-400 (340-680)	6.2 (0.17)	1.46 (0.44)	2.3 diameter x 4.25 (0.7 x 1.3)	1,200 (540)	9.0 (2,240)	n/a
HF-600 C	400-600 (680-1,020)	19.3 (0.54)	2.73 (0.83)	3.0 diameter x 5.5 (0.9 x 1.7)	2,700 (1,220)	12.0 (2,990)	n/a
HF-1000 C	600-1,000 (1,020-1,700)	32.2 (0.90)	2.56 (0.78)	4.0 diameter x 5.5 (1.3 x 1.7)	4,700 (2,130)	11.0 (2,740)	n/a
HF-1500 C	1,000-1,500 (1,700-2,550)	51.4 (1.43)	2.62 (0.79)	5.0 diameter x 5.5 (1.6 x 1.7)	7,400 (3,350)	10.0 (2,490)	n/a
HF-2000 C	1,500-2,000 (2,550-3,400)	64.7 (1.80)	2.29 (0.69)	6.0 diameter x 5.9 (1.8 x 1.8)	10,800 (4,900)	9.0 (2,240)	n/a
HF-3000 C	2,000-3,000 (3,400-5,100)	101.2 (2.82)	2.29 (0.69)	7.5 diameter x 5.5 (2.3 x 1.7)	16,800 (7,600)	11 (2,740)	n/a
HIGH FLOW Skid-Mounted Systems							
HF-400 S	200-400 (340-680)	6.2 (0.17)	1.46 (0.44)	6.0 x 4.0 x 5.7 (1.8 x 1.3 x 1.8)	2,300 (1,040)	10.0 (2,490)	2
HF-600 S	400-600 (680-1,020)	19.3 (0.54)	2.73 (0.83)	7.7 x 4.0 x 7.5 (2.4 x 1.3 x 2.3)	4,100 (1,860)	13.8 (3,440)	5
HF-1000 S	600-1,000 (1,020-1,700)	32.2 (0.90)	2.56 (0.78)	10.0 x 6.0 x 7.2 (3.1 x 1.9 x 2.2)	6,800 (3,080)	13 (3,240)	7.5
HF-1500 S	1,000-1,500 (1,700-2,550)	51.4 (1.43)	2.62 (0.79)	10.5 x 6.0 x 7.7 (3.3 x 1.9 x 2.4)	9,500 (4,300)	13 (3,240)	7.5
HF-2000 S	1,500-2,000 (2,550-3,400)	64.7 (1.80)	2.29 (0.69)	11.5 x 7.0 x 8.0 (3.5 x 2.1 x 2.4)	12,900 (5,860)	13 (3,240)	10
HF-3000 S	2,000-3,000 (3,400-5,100)	101.2 (2.82)	2.29 (0.69)	13.5 x 8.0 x 8.3 (4.2 x 2.5 x 2.6)	19,400 (8,820)	13 (3,240)	15
HIGH FLOW Top-Mounted Fan Systems							
HF-400 T	200-400 (340-680)	6.2 (0.17)	1.46 (0.44)	2.3 diameter x 5.75 (0.7 x 1.8)	1,320 (600)	11 (2,740)	1.5
HF-600 T	400-600 (680-1,020)	19.3 (0.54)	2.73 (0.83)	3.0 diameter x 7.4 (0.9 x 2.2)	2,860 (1,300)	13 (3,240)	3
HF-1000 T	600-1,000 (1,020-1,700)	32.2 (0.90)	2.56 (0.78)	4.0 diameter x 7.7 (1.3 x 2.4)	5,055 (2,300)	13 (3,240)	5
VENTSORB® PE							
VSPE-200-C	100-200 (170-340)	4.9 (0.14)	2.4 (0.73)	1.9 diameter x 3.0 (0.6 x 0.9)	950 (430)	6.0 (1,490)	n/a
VSPE-200-S	100-200 (170-340)	4.9 (0.14)	2.4 (0.73)	6.0 x 4.0 x 3.6 (1.8 x 1.3 x 1.1)	700 (320)	5.2 (1,300)	1
VSPE-200-T	100-200 (170-340)	4.9 (0.14)	2.4 (0.73)	1.9 diameter x 4.0 (0.6 x 1.2)	800 (360)	6.0 (1,490)	1/2

HF-C STAND ALONE CANISTER
- HIGH FLOW canister PPL/PE construction (with UV inhibitor)
- Stainless steel ground rod assembly
- Initial load of activated carbon
- Combined drain/water regeneration fitting with ball valve
- Water regeneration over flow fitting
- Lockable removable canister top of manway (HF2000/3000)
- Flanged inlet air nozzle (ANSI 150 flange, undrilled)
- Plain-end outlet air nozzle

HF-S SKID-MOUNTED SYSTEM
- HIGH FLOW stand alone canister (with HF-C features above)
- Initial load of activated carbon
- FRP fan with TEFC motor
- Combination motor starter, NEMA 4X
- Transition duct, flex connector, and flow control water regeneration valve
- Pressure differential indicator
- Skid mount for all items above

HF-T TOP-MOUNTED FAN SYSTEM
- HIGH FLOW stand alone canister (with HF-C features above)
- Initial load of activated carbon
- Cast aluminum fan with TEFC motor
- Pressure differential indicator

DESCRIPTION
Continental Carbon Group's HIGH FLOW and VENTSORB® PE Series Odor Control Systems represent a perfect fit for odor control applications where space is at a premium and simplicity is a must. They have one of the smallest footprints of any odor control system, considerably smaller than most biofilter and wet scrubbing systems. Within this small footprint, Continental Carbon Group can provide a total package complete with fan, controls, and all of the accessories required. All the owner needs to do is make a few utility connections and flip a switch.

FLEXIBILITY
Both the HIGH FLOW and VENTSORB® PE can be configured in a number of ways in order to solve an odor problem. There are three basic models to choose from:
- A simple, passive, stand-alone canister
- Skid-mounted system complete with fan and controls
- A top-mounted fan system

APPLICATIONS
Due to the relatively small sizes, the HIGH FLOW and VENTSORB® PE are ideally suited for municipal wastewater collection system facilities such as pump stations and lift stations, where space is usually at a premium. They are also well suited to point source applications within the wastewater treatment plant itself. When filled with CENTAUR® HSV water regenerable catalytic activated carbon, the HIGH FLOW and VENTSORB® PE treat hydrogen sulfide (H_2S), as well as, odorous organic sulfur compounds such as methyl mercaptan and dimethyl disulfide. For the treatment of low H_2S and organic sulfur compounds, the HIGH FLOW or VENTSORB® PE can be filled with one of our other activated carbons. With higher levels of H_2S, please consider our MINI-PHOENIX® PLUS and PHOENIX® odor control systems, designed for the control of heavy hydrogen sulfide loadings.

For applications other than continuous operation at the design air flow rate, contact Continental Carbon Group for review and recommendation.



HF-1000-S



HF-400-T



VSPE-200-C

WARRANTY

WARRANTIES: Seller warrants that the carbon adsorption system sold hereunder shall be free from defects in materials and workmanship for a period of one (1) year from the date of system start-up or eighteen (18) months from date of system shipment, whichever comes first. The warranty does not apply to problems associated with normal wear and tear, improper maintenance, negligence, misuse, or the failure to operate the system in strict accordance with the operating and maintenance plan provided. For those items provided by, but not directly manufactured by the Seller, the manufacturer's warranty shall apply provided warranty coverage exceeds that which is provided by the Seller. All other warranties, either express or implied, are hereby disclaimed including but not limited to the warranty of merchantability and fitness for a particular purpose.

Seller warrants that any/all activated carbon provided hereunder shall conform to the specifications for such grade as published from time to time by the Seller. There are no warranties made with regard to the activated carbon or system to be sold hereunder other than those contained in this paragraph or stated elsewhere in the proposal. All other warranties express or implied, are hereby disclaimed including, but not limited to, the warranty of merchantability and fitness for a particular purpose.

This warranty is limited to the replacement and/or repair by the Seller of any parts or materials which in the Seller's determination are defective. This warranty does not cover any charges by the Buyer for replacement of parts, adjustments or repairs, or any other work unless such charges shall be assumed or authorized in advance in writing by the Seller.

LIMITATION OF LIABILITY: Seller's liability and the Buyer's exclusive remedy for any cause of action arising out of this transaction, including but not limited to breach of warranty, negligence and/or indemnification is expressly limited to a maximum of the purchase price of the carbon adsorption system sold hereunder. All claims of whatsoever nature shall be deemed waived unless made in writing within forty-five (45) days of the occurrence giving rise to the claim. In no event shall the Seller for any reason or pursuant to any provision of these warranties be liable for incidental or consequential damages, or damages in excess of the purchase price of the system supplied, nor shall the Seller be liable for loss of profits or fines imposed by Governmental agencies.

FORCE MAJEURE: Except as otherwise provided hereafter, neither party shall be liable to the other party for failure to perform any of its obligations hereunder due to Act of God, accident, fire, flood, riot, war, sabotage, explosion, strike, labor disturbance, national defense requirements, governmental law, ordinance, rule or regulation, whether valid or invalid, extraordinary failure of equipment or apparatus, inability to obtain electricity or other type of energy, raw material, labor, equipment or transportation, or any similar or different contingency beyond the party's reasonable control which would make performance impractical whether or not the contingency is of the same class as those enumerated above. The party invoking Force Majeure shall provide the other party of its estimate as to when the Force Majeure condition will end. The minimum term of this agreement shall be extended by the duration of any Force Majeure period.

SECURITY INTEREST: Buyer represents that the System is equipment to be used for business, and shall remain personal property. Buyer grants the Seller a security interest in the System to secure the payment of the purchase price. Buyer will not sell, lease, transfer or encumber the System and will keep it free from any and all liens and security interests until the Seller has been paid in full and shall execute any and all necessary documents to protect such security interests.

MODIFICATION OR WAIVER OF PROVISIONS: This proposal cannot be modified except by agreement in writing signed by the Seller. A waiver or repeated waiver by the Seller of any provision or the breach of any provision shall not constitute a further waiver of such provision or breach.

ENTIRE AGREEMENT: The proposal, as signed by both parties, including the General Terms of Sale and any attachments referenced in the proposal, embodies the entire agreement between Buyer and Seller. The parties shall not be bound by or liable for any statement, representation, promise or understanding not set forth herein. Nothing contained in correspondence or discussions prior to the date of the agreement has any effect on this agreement unless specifically incorporated herein. No changes, modifications of, or additions to any portion of the agreement shall be valid unless reduced to writing, agreed to and signed by both parties, and incorporated into the agreement.

CONTINENTAL CARBON GROUP ♦ COPYRIGHT 2022 ♦ ALL RIGHTS RESERVED

PERFORMANCE STANDARDS

CONTINENTAL CARBON GROUP
VAPOR PHASE ODOR CONTROL- PERFORMANCE STANDARDS

DATE: MAY 2017

Continental Carbon Group (CCG) activated carbon based vapor phase adsorption media and systems are designed and optimized to remove or reduce odorous contaminants from air streams. For air stream odors due primarily to Hydrogen Sulfide (H2S), CCG guarantees that for the range of 2.5 to 50 ppmV H2S, its vapor phase activated carbon systems, operating within the design limits, will remove up to 99 % TWA of incoming H_2S. At less than 2.5 ppmV H2S, the effluent discharge will be no greater than 25 ppbV of H_2S.[1] Due to variation in process streams and operating conditions, this performance guarantee applies to testing performed at startup of media or system operation. This guarantee is applicable to all CCG vapor phase activated carbon system designs, using the CCG activated carbon recommended for the specific application.

Due to the typical complexity and variability of many odorous air streams containing non-regenerable organic contaminants, such as encountered in sewage and wastewater treatment facilities, removal efficiencies are achieved but sometimes for a very short period of time. There are certain volatile odorous or organic contaminants, (e.g., ammonia, carbonyl sulfide, etc.,) that have very low capacity on activated carbons, or due to operating conditions, (e.g., liquid or solids carryover or condensation, insufficient contact time, etc.,) that can result in rapid odor breakthrough and detection from activated carbon beds. Detailed air stream analysis or pilot column testing may be required to estimate overall odor removal efficiency for a carbon bed system desgin and bed life. Therefore, it is required/recommended that the design and selection of vapor phase carbon adsorption systems for critical applications, such as odor control, be based on a thorough evaluation of the source and air stream to be treated.

Note:

1. In-situ regenerated activated carbon systems, using either water or chemicals, may have a lowered removal efficiency following a regeneration. Depending on the relative humidity of the inlet air stream, this time will vary and removal efficiencies will be less than stated above. Similarly, systems that are not designed, installed, or operated properly, for example by introduction of liquid or solid contaminants, may not consistently achieve the guaranteed removal efficiency or bed life estimates.

CONTINENTAL CARBON GROUP ♦ COPYRIGHT 2022 ♦ ALL RIGHTS RESERVED

CONTACT INFORMATION

CONTINENTAL CARBON GROUP
PROJECT MANAGER
1100 SOUTH SERVICE ROAD, SUITE 321
STONEY CREEK, ON L8E-0C5

PHONE: 1-905-643-7615

FAX: 1-905-643-5403

www.continental-carbon.com

sales@continental-carbon.com

CONTINENTAL CARBON GROUP ♦ COPYRIGHT 2022 ♦ ALL RIGHTS RESERVED

Continental Carbon Group

SECTION 2

INSTALLATION & OPERATION

SECTION 2 – INSTALLATION AND OPERATION

INSTALLATION INSTRUCTIONS

The Ventsorb PE is shipped, ready to install and should be placed on a firm and level accessible area as near as possible to the emission source.

Prior to connection of the unit remove the canister lid and inspect the interior. The internal diffuser assembly (which may have become dislodged in shipment) should be in place and firmly seated.

Next add the granular activated carbon to the canister, leveling the top surface once it is filled. Note the considerations and precautions in Section 3, Safety Precautions With Activated Carbon. Handling dry carbon may cause localized dust problems. Place the lid on the canister and firmly set, or clamp in place, using the hold down clips provided. Ensure that any outlet ducting is separately supported from the canister.

Electrical power must be made available to the fan motor starter (if provided). All electrical connections should be in accordance with applicable codes.

Connect a flexible hose or duct from the source to the fan or canister inlet.

Prior to operating the unit ensure the blower rotation is correct. Make certain there is no loose material in the ductwork leading to the fan, and suction connections are properly sealed.

Note: The following describes the start-up and shutdown procedures for the Ventsorb PE, some of the equipment mentioned may not be provided by Continental Carbon Group.

CONTINENTAL CARBON GROUP ♦ COPYRIGHT 2022 ♦ ALL RIGHTS RESERVED

INITIAL START-UP

The unit can be put in operation by initiating the blower operation and adjusting the inlet flow control damper (if installed) to the desired flow. Damper position may need to be set at less than 100% open since a fresh fill of carbon has less pressure drop. Periodic adjustment of the damper position will be required to maintain the desired flow as the bed becomes densely packed over time.

Note: Canisters should not be subjected to a static pressure or vacuum of more than ten (10) inches water gauge or operating temperature of 150° F.

SHUTDOWN PROCEDURE

Once the need has been determined to shut the system down for either routine or emergency reasons, this can be accomplished by the following:

a. De-energize electrical power to the system and secure according to plant practices.
b. Allow fan to come to a complete stop.
c. Close the inlet flow control damper completely.

CAUTIONS: Due to the heat of adsorption, if the adsorber had been recently exposed to high concentrations of organic compounds and hydrogen sulfide, it is recommended that the adsorber be exposed to fresh (ambient) air for a period of time to ensure media has cooled sufficiently if to be shut down for longer than 6 hours.

CARBON REPLACEMENT / REPLACEMENT OF VENTSORB PE CANISTER

Once it has been determined that the carbon is no longer removing the odorous compounds, it may be replaced with a fresh fill of activated carbon. The outlet rain tee or discharge ducting should be disconnected. Remove the canister lid and transfer the spent carbon to another container for safe disposal. Use caution in handling spent activated carbon. Inspect the internals to insure that they are not damaged. Recharge the canister with carbon in accordance with the carbon installation instructions. Replace the lid on the canister and reinstall the outlet ducting or rain tee.

Alternatively, the spent carbon and plastic Ventsorb PE canister can be sent directly to landfill. A replacement Ventsorb PE canister pre-filled with suitable media can be ordered from CCG to replace the spent canister.

CONTINENTAL CARBON GROUP ♦ COPYRIGHT 2022 ♦ ALL RIGHTS RESERVED

TROUBLESHOOTING GUIDE

COMMON PROBLEMS & CORRECTIVE ACTIONS

Problem	Possible Cause	Solution
Fan will not start	Incoming power not activated	Check power to starter
	Breaker tripped	Push re-set button on panel
	Motor problem	See Motor O&M in Section for recommendations
Fan making excessive noise or vibration	Loose bolts	Tighten loose bolts
	Damaged or worn belts.	Replace belts
	Other	See Fan O&M in Section for mfg's recommendations
High pressure drop on D.P. Gauge	Excessive air flow	Reduce air flow by closing the valve slightly
	Carbon bed partially plugged	Replace carbon bed
Odor breakthrough	Inlet concentrations above design	Check and bring back to design limits
	Carbon needs replaced	Call CCG for replacement carbon
Continental Carbon Service Department: 1-905-643-7615		

CONTINENTAL CARBON GROUP ♦ COPYRIGHT 2022 ♦ ALL RIGHTS RESERVED

SAFETY PRECAUTIONS WITH ACTIVATED CARBON

OXYGEN DEMAND CREATED BY ACTIVATED CARBON IN CONFINED VESSELS

It has been confirmed that wet granular activated carbon confined in vessels creates an oxygen demand which is hazardous to human health and can cause death unless proper safety precautions are taken.

Studies conducted in vessels have shown that *low oxygen content exists* in vessels containing wet carbon. Laboratory experiments conducted also have revealed that commercial activated carbons in a wet or moist condition will lower the oxygen content of an isolated space. Preliminary indications of this research are:

a. The phenomenon occurs with wet activated carbon of all common types.

b. The rate of oxygen uptake naturally varies with the degree of exposure of the wet carbon to the air. Thus it is relatively rapid in a drained enclosure.

c. There is some indication of a limit to carbon's capacity for oxygen, but until more is known, it would be prudent to assume that all carbon (fresh, used, reactivated) will also exhibit this characteristic. Similarly, although these tests were run with water, it should be assumed that the phenomenon will occur in other liquid and vapor systems.

All confined spaces, including those containing activated carbon, should be presumed to be hazardous. Appropriate safety measures should always be taken before entering, as well as when workers are in, a confined space. OSHA regulations applicable to respiratory protection in oxygen-deficient atmospheres should be strictly adhered to.

CARBON DISPOSAL PROCEDURE

Spent carbon acceptance **must** be obtained prior to the carbon being sent off site for disposal. It is the responsibility of the generator to decide whether the spent carbon is non-hazardous or hazardous as defined by Part 261 of the Resource Conservation and Recovery Act (RCRA).

Please contact your local waste broker for assistance in profiling and disposing of the spent carbon.

CONTINENTAL CARBON GROUP ♦ COPYRIGHT 2022 ♦ ALL RIGHTS RESERVED

Continental Carbon Group

SECTION 3

CARBON INFORMATION

Continental Carbon Group

PRODUCT DATA SHEET

CC-IPH Pelletized Impregnated Activated Carbon

DESCRIPTION:

CC-IPH is a bituminous coal-based activated carbon that is specially impregnated for the desulfurization of gases and the removal of all acidic contaminants such as hydrogen sulfide (H_2S), hydrogen chloride (HCl) and mercaptans (thiols).

STANDARD PACKAGING:

CC-IPH is available in 55 lb. bags or 1,100 lb. bulk bags. Other sizes available upon request.

SPECIFICATIONS:

- Particle type: Pelletized, 4.0 mm x 6.0 mm
- Mean particle diameter: 4.7 mm (min)
- CCl_4 activity: 60 % (min)
- Iodine no: 1000 mg/g (min)
- Surface area: 1000 m^2/g (min)
- Hardness: 95% (min)
- Bulk density: 0.55 g/cc
- Moisture (as packaged): 15% (max)
- Typical hydrogen sulfide breakthrough capacity, g H_2S/cc carbon: 0.16
- Max. head loss @ 50 fpm superficial velocity through a dense packed bed, in wc/ft: 1.9 (max)



SAFETY MESSAGE

Wet activated carbon removes oxygen from air, causing a severe hazard to workers inside carbon vessels. Confined space/low oxygen procedures should be put in place before any entry is made. Such procedures should comply with all applicable local, provincial/state and federal guidelines.

For More Information:
Continental Carbon Group
www.continental-carbon.com | info@continental-carbon.com | 905.643.7615

Continental Carbon Group

SECTION 4

EQUIPMENT/PARTS DATA

4.1 – FAN/MOTOR DATA

4.2 – DIFFERENTIAL PRESSURE GAUGE

SECTION 4.1

EQUIPMENT / PARTS PAGES

1. FAN/MOTOR DATA

PHONE: (941) 751-7596
www.plastecventilation.com

PLASTEC 15

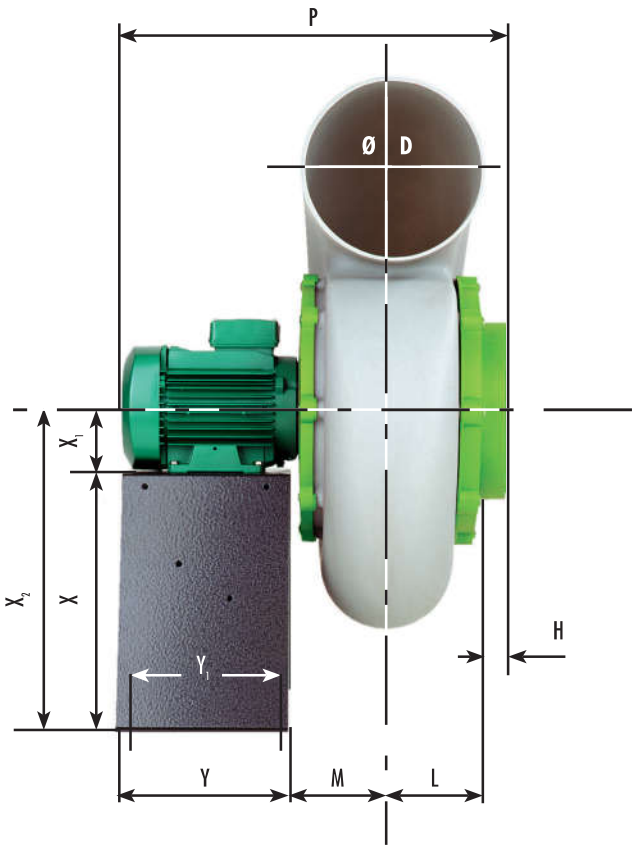

RD POSITION

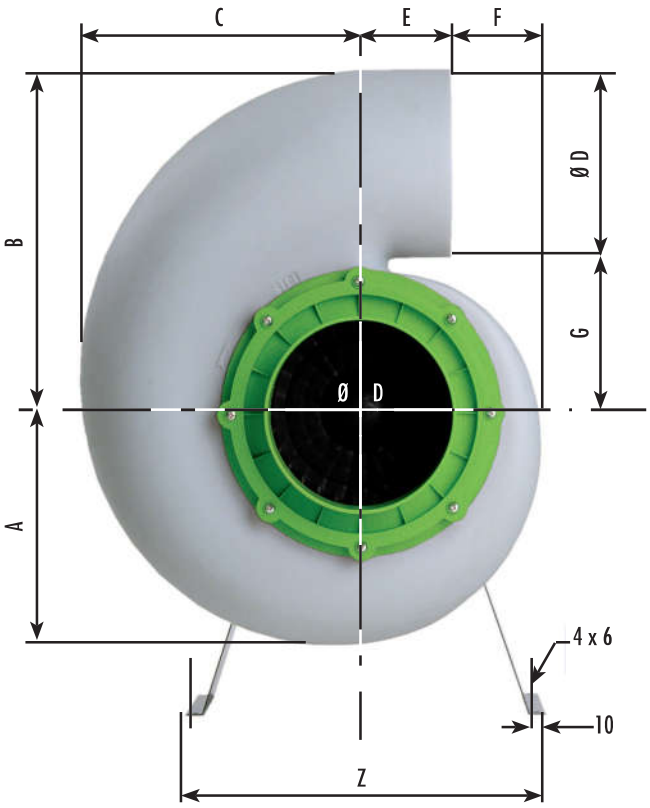

LG POSITION

** Pictures and dimensions non-contractual*

Dimensional data (inches) - Metal stand does not come standard with fan (see accessories pricing)																
A	B	C	Ø D	E	F	G	H	L	M	P	Y	Y_1	Z	X	X_1	X_2
6.69	9.45	7.99	4.92	3.94	1.26	4.53	1.18	2.76	3.15	14.17	7.09	6.30	13.39	9.45	2.80	12.24

WARNING : for an enclosed pedestal mounting, X2 = 14.57".

Handings are viewed from inlet side - 45 degree adjustable



CCW 360 LG 0	CCW 45 LG 45	CCW 90 LG 90	CCW 135 LG 135	CCW 180 LG 180	CCW 225 LG 225	CCW 270 LG 270	CCW 315 LG 315

PHONE: (941) 751-7596
www.plastecventilation.com

PLASTEC 15

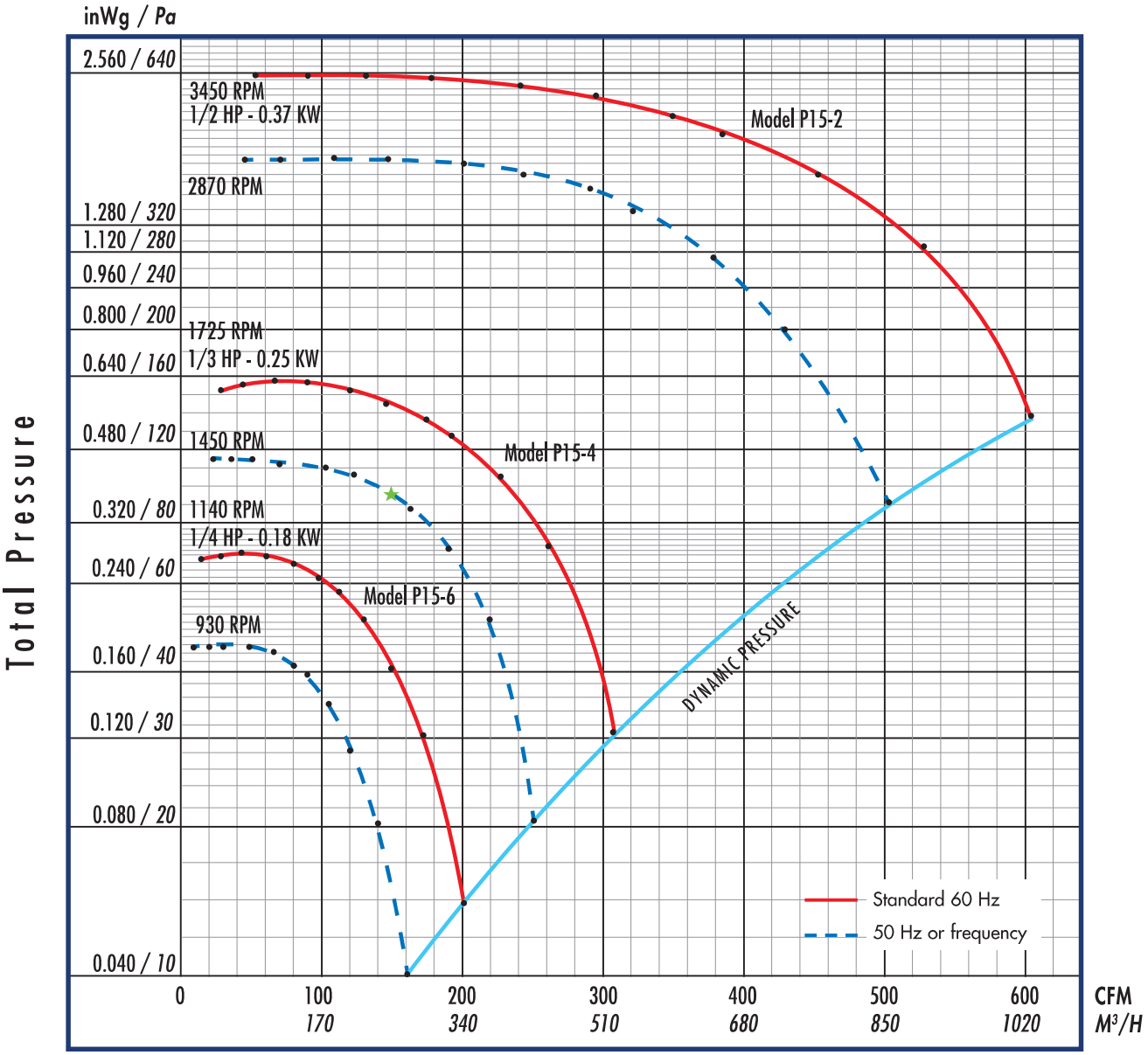

AMCA 210-85
ISO 5801

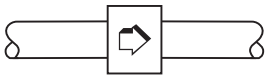

Type D

Noise from envelope + casing and peak motor efficiency (acoustical power L_{WA})

R.P.M.	dB (A)
1435	49
2870	63

Global acoustical power on the suction side

R.P.M.	dB(A)	dB
★ 1450	54	59
2870	72	74

Noise ratings in accordance with ISO 13347-4.
Visit our website for details.

Acoustical power levels per octave band values on the suction side (dB)

Freq. Octave Hz	1450 R.P.M. ★ 150 CFM
125	55.3
250	51.7
500	52.1
1000	49.8
2000	41.8
4000	36.9

BALDOR
A MEMBER OF THE ABB GROUP

BALDOR • RELIANCE

Product Information Packet

PLASTEC VENTILATION, INC.

34-7706-3809G1

.5HP,3450//2850RPM,1PH,60//50HZ,56YZ,342

Copyright © All product information within this document is subject to Baldor Electric Company copyright © protection, unless otherwise noted.

Part Detail							
Revision:	D	**Status:**	PRD/A	**Change #:**		**Proprietary:**	Yes
Type:	AC	**Prod. Type:**	3420L	**Elec. Spec:**	34WG3809	**CD Diagram:**	CD0566
Enclosure:	XPFC	**Mfg Plant:**		**Mech. Spec:**	34-7706	**Layout:**	34LY7706
Frame:	56YZ	**Mounting:**	F3	**Poles:**	02	**Created Date:**	08-31-2015
Base:	RG	**Rotation:**	R	**Insulation:**	B	**Eff. Date:**	02-10-2017
Leads:	6#18					**Replaced By:**	
Literature:		**Elec. Diagram:**					

BALDOR A MEMBER OF THE ABB GROUP

Nameplate NP1482XPSL

NO.		CC					
SER.							
SPEC.	34-7706-3809G1						
CAT.NO.	MXS0502P						
HP	.5	T. CODE	T3C				
VOLTS	115/208-230						
AMPS	6.8/3.3-3.4//8.2/3.6-4.1						
RPM	3450//2850						
HZ	60//50	PH	1	CL	B		
SER.F.	1.00	DES	N	CODE	K		
RATING	40C AMB-CONT						
FRAME	56YZ	NEMA-NOM-EFF	60				
USABLE AT 208V		PF	70				
BLANK							

BALDOR A MEMBER OF THE ABB GROUP

AC Induction Motor Performance Data

Record # 52645 - Typical performance - not guaranteed values

Winding: 34WG3809-R010	**Type:** 3420L	**Enclosure:** XPFC

Nameplate Data				115 V, 60 Hz: Low Voltage Connection	
Rated Output (HP)	.5			Full Load Torque	0.752 LB-FT
Volts	115/208-230			Start Configuration	direct on line
Full Load Amps	6.8/3.3-3.4//8.2/3.6-4.1			Breakdown Torque	2 LB-FT
R.P.M.	3450//2850			Pull-up Torque	1.375 LB-FT
Hz	60//50	Phase	1	Locked-rotor Torque	2.625 LB-FT
NEMA Design Code	N	KVA Code	K	Starting Current	36.5 A
Service Factor (S.F.)	1			No-load Current	4.7 A
NEMA Nom. Eff.	60	Power Factor	70	Line-line Res. @ 25ºC	0.931 Ω A Ph 3.7 Ω B Ph
Rating - Duty	40C AMB-CONT			Temp. Rise @ Rated Load	45°C
				Locked-rotor Power Factor	91.6
				Rotor inertia	0.0186 LB-FT2

Load Characteristics 115 V, 60 Hz, 0.5 HP

% of Rated Load	25	50	75	100	125	150
Power Factor	49	60	70	77	81	84
Efficiency	33.2	50.7	57.8	61.4	62.9	62.4
Speed	3550	3520	3490	3450	3420	3370
Line amperes	4.98	5.26	5.96	6.8	7.8	8.86

BALDOR A MEMBER OF THE ABB GROUP

Performance Graph at 115V, 60Hz, 0.5HP Typical performance - Not guaranteed values

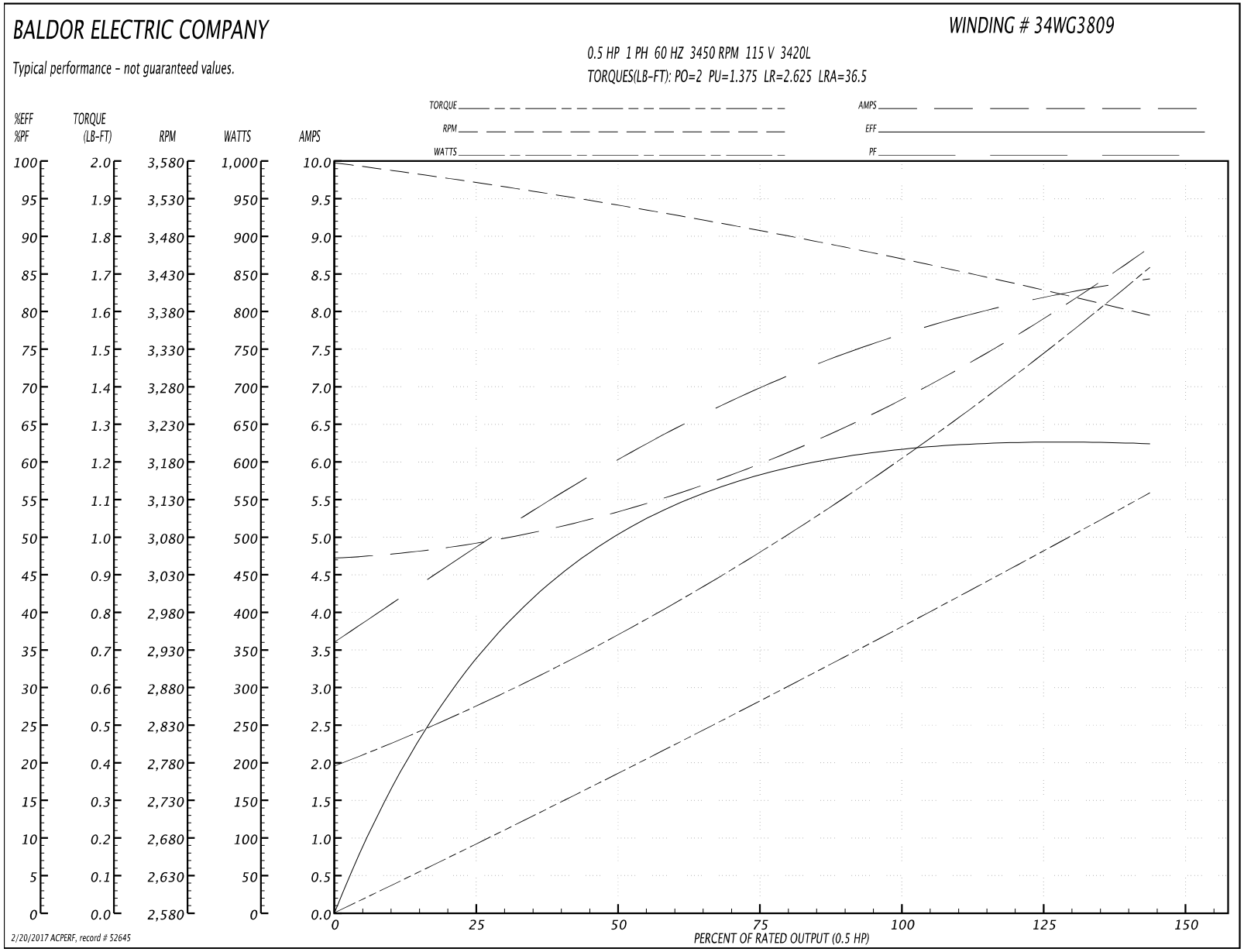

BALDOR
A MEMBER OF THE ABB GROUP

AC Induction Motor Performance Data

Record # 52647 - Typical performance - not guaranteed values

Winding: 34WG3809-R010	**Type:** 3420L	**Enclosure:** XPFC

Nameplate Data				115 V, 50 Hz: Low Voltage Connection	
Rated Output (HP)	.5			Full Load Torque	0.919 LB-FT
Volts	115/208-230			Start Configuration	direct on line
Full Load Amps	6.8/3.3-3.4//8.2/3.6-4.1			Breakdown Torque	2.44 LB-FT
R.P.M.	3450//2850			Pull-up Torque	1.88 LB-FT
Hz	60//50	Phase	1	Locked-rotor Torque	3.01 LB-FT
NEMA Design Code	N	KVA Code	K	Starting Current	34.8 A
Service Factor (S.F.)	1			No-load Current	6.17 A
NEMA Nom. Eff.	60	Power Factor	70	Line-line Res. @ 25ºC	0.931 Ω A Ph 3.7 Ω B Ph
Rating - Duty	40C AMB-CONT			Temp. Rise @ Rated Load	73°C
				Locked-rotor Power Factor	92.5
				Rotor inertia	0.0186 LB-FT2

Load Characteristics 115 V, 50 Hz, 0.5 HP

% of Rated Load	25	50	75	100	125	150
Power Factor	39	50	62	68	75	80
Efficiency	33.5	49.2	56.4	59.7	61.5	63.5
Speed	2959	2936	2906	2877	2843	2813
Line amperes	6.45	6.71	7.26	8.08	8.65	9.47

BALDOR A MEMBER OF THE ABB GROUP

Performance Graph at 115V, 50Hz, 0.5HP Typical performance - Not guaranteed values

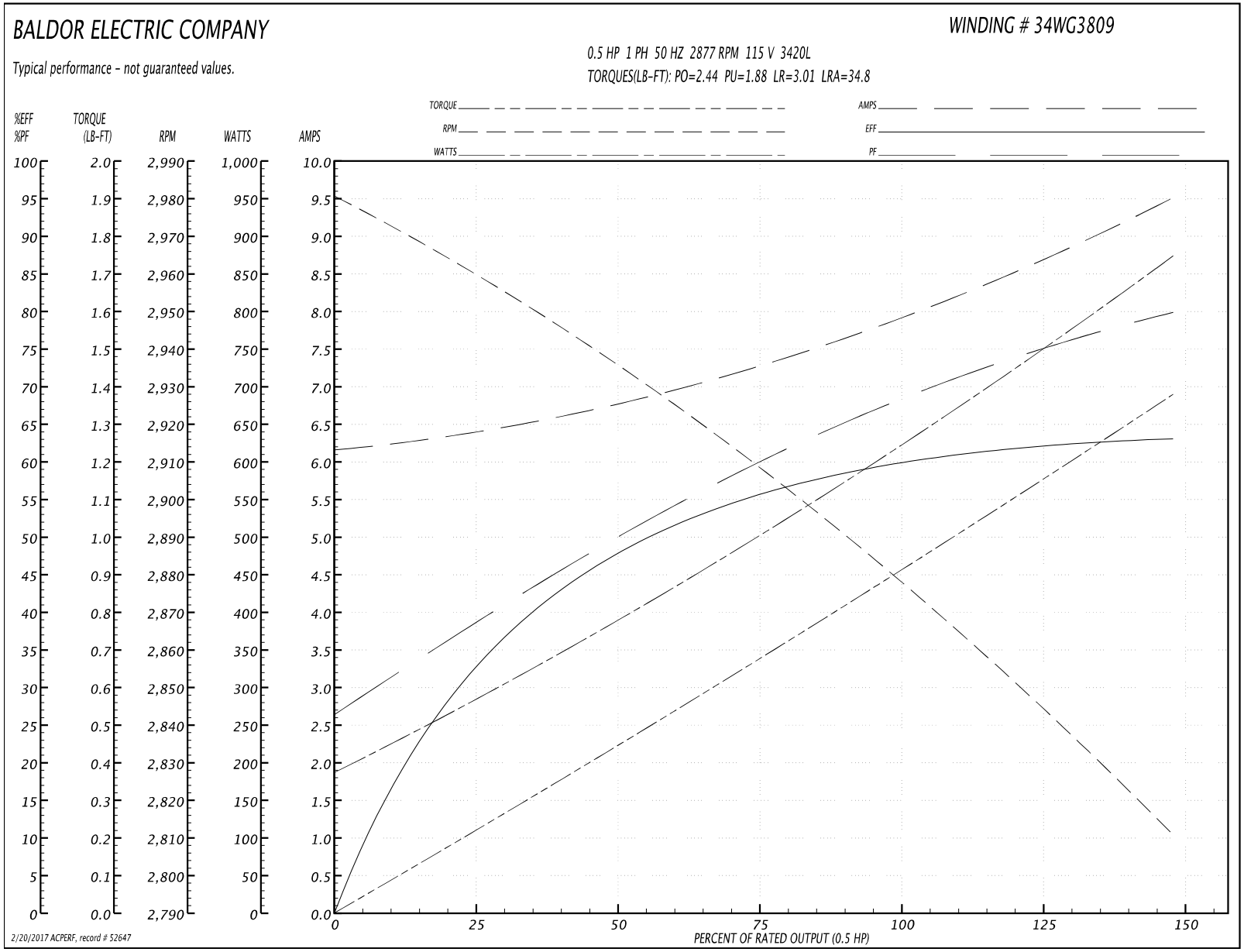

BALDOR
A MEMBER OF THE ABB GROUP

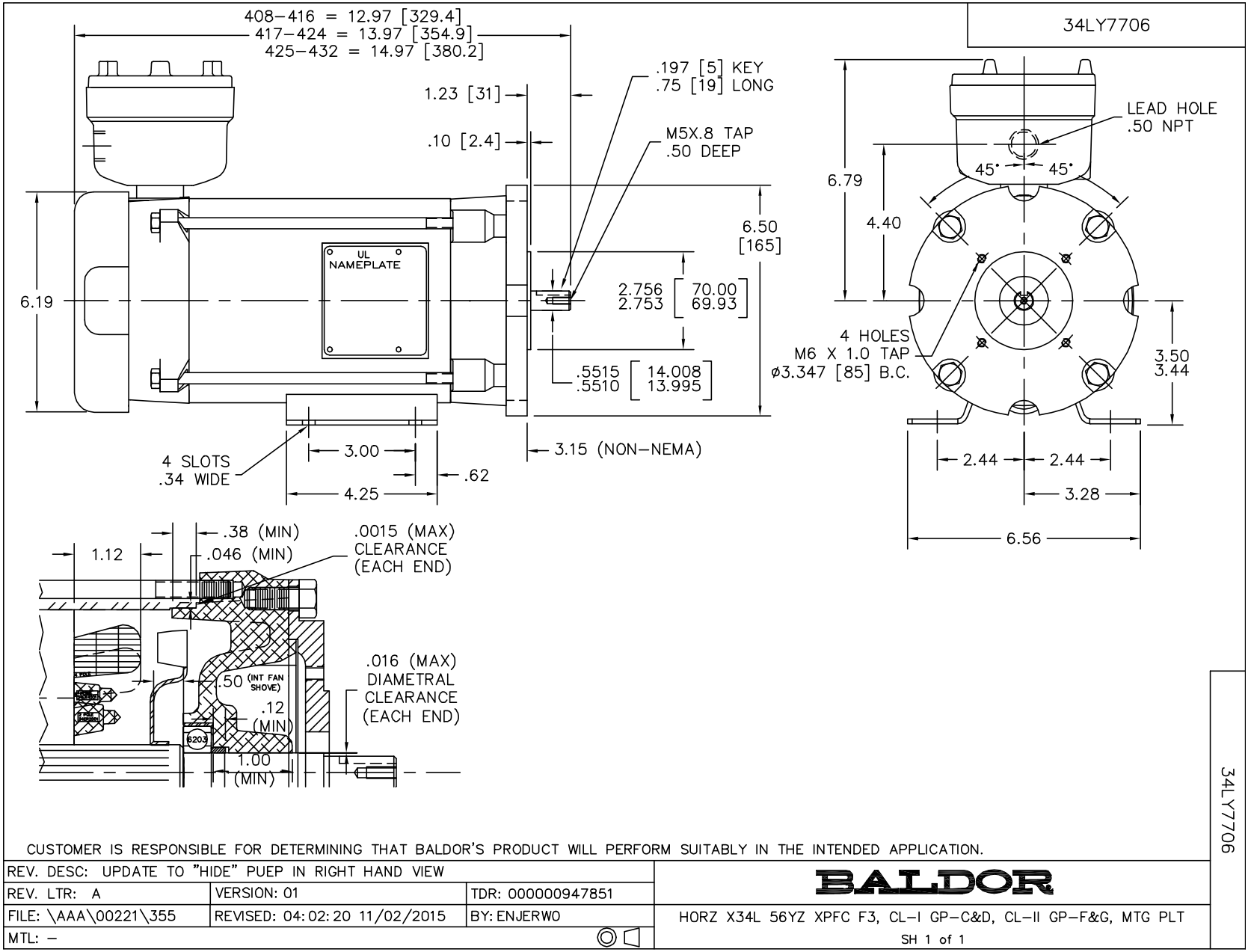

CUSTOMER IS RESPONSIBLE FOR DETERMINING THAT BALDOR'S PRODUCT WILL PERFORM SUITABLY IN THE INTENDED APPLICATION.

REV. DESC: UPDATE TO "HIDE" PUEP IN RIGHT HAND VIEW		
REV. LTR: A	VERSION: 01	TDR: 000000947851
FILE: \AAA\00221\355	REVISED: 04:02:20 11/02/2015	BY: ENJERWO
MTL: –		

BALDOR

HORZ X34L 56YZ XPFC F3, CL–I GP–C&D, CL–II GP–F&G, MTG PLT

SH 1 of 1

BALDOR A MEMBER OF THE ABB GROUP

CD0566

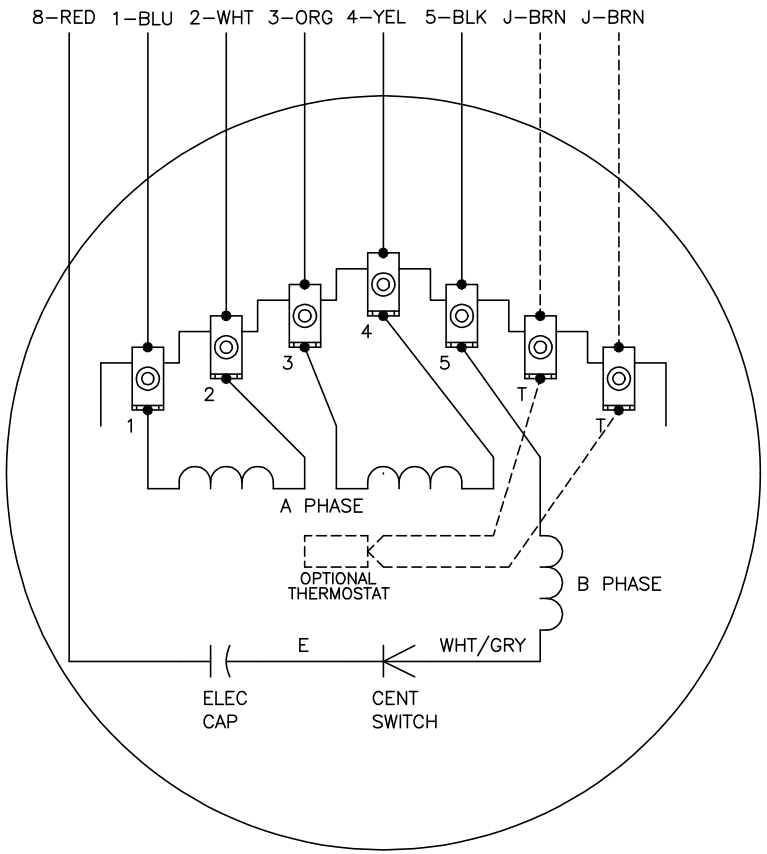

	LINE A	LINE B	JOIN
HIGH STD	1	4,5	2,3,8
HIGH OPP	1	4,8	2,3,5
LOW STD	1,3,8	2,4,5	–
LOW OPP	1,3,5	2,4,8	–

NOTES:

1. STANDARD ROTATION IS CCW FACING END OPPOSITE SHAFT EXTENSION.
2. MULTIPLE CAPACITORS ARE CONNECTED IN PARALLEL UNLESS OTHERWISE SPECIFIED.
3. OPTIONAL THERMOSTAT IS PROVIDED WHEN SPECIFIED.
4. LEAD COLORS ARE OPTIONAL. LEADS MUST ALWAYS BE NUMBERED AS SHOWN.

CD0566

REV. DESC: REVISE TO SHOW OPTIONAL COLORS			BALDOR ELECTRIC Co.
REV. LTR: C	BY: JLP	REVISED: 04/08/99 4:49	TDR: 0178636
CD0566		FILE: AAA00014319	MDL: –
		MTL: –	TYPE L, DV, REV, 6 LD, 34XP

BALDOR A MEMBER OF THE ABB GROUP

SECTION 4.2

EQUIPMENT / PARTS PAGES

1. DIFFERENTIAL PRESSURE GAUGE

Dwyer®

Series 2000 Magnehelic® Differential Pressure Gages

Indicate Positive, Negative or Differential, Accurate within 2%

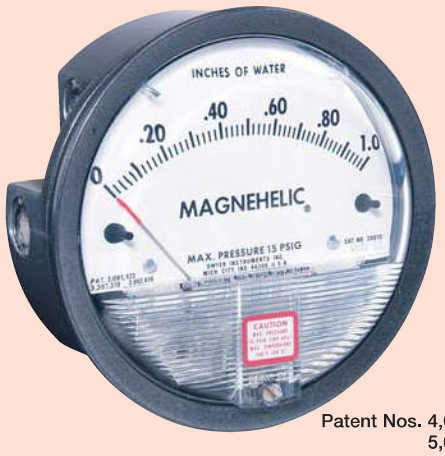

Patent Nos. 4,030,365
5,012,678

Standard Magnehelic® Pressure Gage has a large, easy-to-read 4" dial.

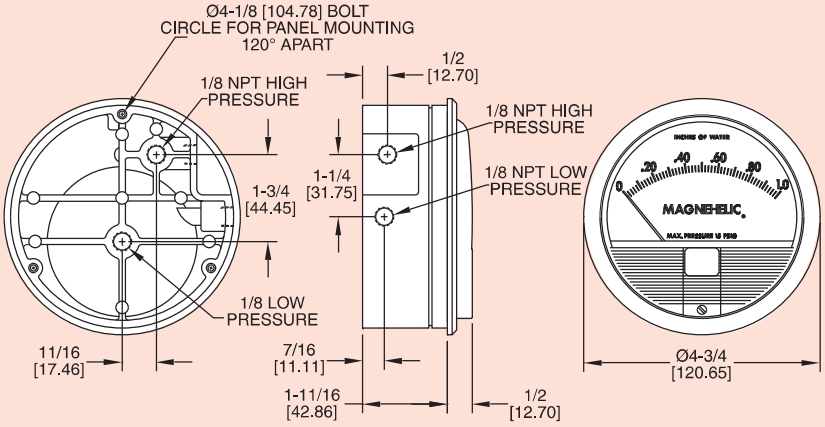

Dimensions, Standard Series 2000 Magnehelic® Pressure Gages. (Slightly different on medium and high pressure models)

Select the Dwyer Magnehelic® gage for high accuracy — guaranteed within 2% of full scale — and for the wide choice of 81 models available to suit your needs precisely. Using Dwyer's simple, frictionless Magnehelic® movement, it quickly indicates low air or non-corrosive gas pressures — either positive, negative (vacuum) or differential. The design resists shock, vibration and over-pressures. No manometer fluid to evaporate, freeze or cause toxic or leveling problems. It's inexpensive, too.

The Magnehelic® is the industry standard to measure fan and blower pressures, filter resistance, air velocity, furnace draft, pressure drop across orifice plates, liquid levels with bubbler systems and pressures in fluid amplifier or fluidic systems. It also checks gas-air ratio controls and automatic valves, and monitors blood and respiratory pressures in medical care equipment.

Note: May be used with Hydrogen where pressures are less than 35 psi.



Flush ...Surface...or Pipe Mounted

MOUNTING. A single case size is used for most models of Magnehelic® gages. They can be flush or surface mounted with standard hardware supplied. With the optional A-610 Pipe Mounting Kit they may be conveniently installed on horizontal or vertical 1¼″ - 2″ pipe. Although calibrated for vertical position, many ranges above 1″ may be used at any angle by simply re-zeroing. However, for maximum accuracy, they must be calibrated in the same position in which they are used. These characteristics make Magnehelic® gages ideal for both stationary and portable applications. A 4⅜″ hole is required for flush panel mounting. Complete mounting and connection fittings plus instructions are furnished with each instrument.



VENT VALVES

In applications where pressure is continuous and the Magnehelic® gage is connected by metal or plastic tubing which cannot be easily removed, we suggest using Dwyer A-310A vent valves to connect gage. Pressure can then be removed to check or re-zero the gage.



HIGH AND MEDIUM PRESSURE MODELS

Installation is similar to standard gages except that a 4⅜″ hole is needed for flush mounting. The medium pressure construction is rated for internal pressures up to 35 psig and the high pressure up to 80 psig. Available for all models. Because of larger case, the medium pressure and high pressure models will not fit in a portable case size. Installation of the A-321 safety relief valve on standard Magnehelic® gages often provides adequate protection against infrequent overpressure.

SPECIFICATIONS

Service: Air and non-combustible, compatible gases. (Natural Gas option available.)
Wetted Materials: Consult factory.
Housing: Die cast aluminum case and bezel, with acrylic cover. Exterior finish is coated gray to withstand 168 hour salt spray corrosion test.
Accuracy: ±2% of full scale (±3% on - 0, -100 Pa, -125 Pa, 10MM and ±4% on - 00, -60 Pa, -6MM ranges), throughout range at 70°F (21.1°C).
Pressure Limits: -20″ Hg. to 15 psig.† (-0.677 bar to 1.034 bar); MP option: 35 psig (2.41 bar), HP option: 80 psig (5.52 bar).
Overpressure: Relief plug opens at approximately 25 psig (1.72 bar), standard gages only.
Temperature Limits: 20 to 140°F.* (-6.67 to 60°C).
Size: 4″ (101.6 mm) Diameter dial face.
Mounting Orientation: Diaphragm in vertical position. Consult factory for other position orientations.
Process Connections: 1/8″ female NPT duplicate high and low pressure taps - one pair side and one pair back.
Weight: 1 lb 2 oz (510 g), MP & HP 2 lb 2 oz (963 g).
Standard Accessories: Two 1/8″ NPT plugs for duplicate pressure taps, two 1/8″ pipe thread to rubber tubing adapter and three flush mounting adapters with screws. (Mounting and snap ring retainer substituted for 3 adapters in MP & HP gage accessories.)
*Low temperature models available as special option.
†For applications with high cycle rate within gage total pressure rating, next higher rating is recommended. See Medium and High pressure options at lower left.

OPTIONS AND ACCESSORIES



Transparent Overlays

Furnished in red and green to highlight and emphasize critical pressures.

Adjustable Signal Flag

Integral with plastic gage cover. Available for most models except those with medium or high pressure construction. Can be ordered with gage or separate.



LED Setpoint Indicator

Bright red LED on right of scale shows when setpoint is reached. Field adjustable from gage face, unit operates on 12-24 VDC. Requires MP or HP style cover and bezel.



Portable Units

Combine carrying case with any Magnehelic® gage of standard range, except high pressure connection. Includes 9 ft. (2.7 m) of ⅜″ I.D. rubber tubing, standhang bracket and terminal tube with holder.



Air Filter Gage Accessory Package

Adapts any standard Magnehelic® for use as an air filter gage. Includes aluminum surface mounting bracket with screws, two 5 ft. (1.5 m) lengths of ¼″ aluminum tubing two static pressure tips and two molded plastic vent valves, integral compression fittings on both tips and valves.

Quality design and construction features

Bezel provides flange for flush mounting in panel.

Clear plastic face is highly resistant to breakage. Provides undistorted viewing of pointer and scale.

Precision litho-printed scale is accurate and easy to read.

Red tipped pointer of heat treated aluminum tubing is easy to see. It is rigidly mounted on the helix shaft.

Pointer stops of molded rubber prevent pointer over-travel without damage.

"Wishbone" assembly provides mounting for helix, helix bearings and pointer shaft.

Jeweled bearings are shock-resistant mounted; provide virtually friction-free motion for helix. Motion damped with high viscosity silicone fluid.

Zero adjustment screw is conveniently located in the plastic cover, and is accessible without removing cover. O-ring seal provides pressure tightness.

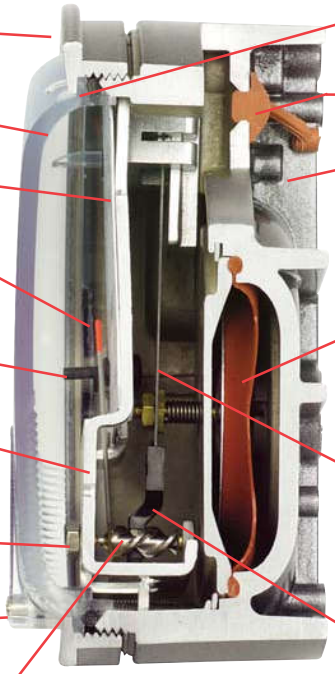

O-ring seal for cover assures pressure integrity of case.

Blowout plug of silicone rubber protects against overpressure on 15 psig rated models. Opens at approximately 25 psig.

Die cast aluminum case is precision made and iridite-dipped to withstand 168 hour salt spray corrosion test. Exterior finished in baked dark gray hammerloid. One case size is used for all standard pressure options, and for both surface and flush mounting.

Silicone rubber diaphragm with integrally molded O-ring is supported by front and rear plates. It is locked and sealed in position with a sealing plate and retaining ring. Diaphragm motion is restricted to prevent damage due to overpressures.

Calibrated range spring is flat spring steel. Small amplitude of motion assures consistency and long life. It reacts to pressure on diaphragm. Live length adjustable for calibration.

Samarium Cobalt magnet mounted at one end of range spring rotates helix without mechanical linkages.

Helix is precision made from an alloy of high magnetic permeability. Mounted in jeweled bearings, it turns freely, following the magnetic field to move the pointer across the scale.

MODELS

Dual Scale English/Metric Models		
Model Number	**Range, In. W.C.**	**Range, Pa or kPa**
2000-OD	0-0.5	0-125 Pa
2001D	0-1.0	0-250 Pa
2002D	0-2.0	0-500 Pa
2003D	0-3.0	0-750 Pa
2004D	0-4.0	0-1.0 kPa
2006D	0-6.0	0-1.5 kPa
2008D	0-8.0	0-2.0 kPa
2010D	0-10	0-2.5 kPa

SERIES 2000 MAGNEHELIC®— MODELS AND RANGES

The models below will fulfill most requirements. Page 11 also shows examples of special models built for OEM customers. For special scales furnished in ounces per square inch, inches of mercury, metric units, etc., contact the factory.

Model Number	Range Inches of Water
2000-00†• •	0-.25
2000-0†•	0-.50
2001	0-1.0
2002	0-2.0
2003	0-3.0
2004	0-4.0
2005	0-5.0
2006	0-6.0
2008	0-8.0
2010	0-10
2015	0-15
2020	0-20
2025	0-25
2030	0-30
2040	0-40
2050	0-50
2060	0-60
2080	0-80
2100	0-100
2150	0-150

Model Number	Range Zero Center Inches of Water
2300-0†•	.25-0-.25
2301	.5-0-.5
2302	1-0-1
2304	2-0-2
2310	5-0-5
2320	10-0-10
2330	15-0-15

Model Number	Range PSI
2201	0-1
2202	0-2
2203	0-3
2204	0-4
2205	0-5
2210*	0-10
2215*	0-15
2220*	0-20
2230**	0-30

*MP option standard
**HP option standard

Dual Scale Air Velocity Units

Model Number	Range in W.C. Velocity, F.P.M.
2000-00AV†• •	0-.25/300-2000
2000-0AV†•	0-.50/500-2800
2001AV	0-1.0/500-4000
2002AV	0-2.0/1000-5600
2010AV	0-10/2000-12500

For use with pitot tube.

Model Number	Range MM of Water
2000-6MM†• •	0-6
2000-10MM†•	0-10
2000-25MM	0-25
2000-50MM	0-50
2000-80MM	0-80
2000-100MM	0-100

Zero Center Ranges

2300-20MM†	10-0-10

Model Number	Range, CM of Water
2000-15CM	0-15
2000-20CM	0-20
2000-25CM	0-25
2000-50CM	0-50
2000-80CM	0-80
2000-100CM	0-100
2000-150CM	0-150
2000-200CM	0-200
2000-250CM	0-250
2000-300CM	0-300

Zero Center Ranges

2300-4CM	2-0-2
2300-10CM	5-0-5
2300-30CM	15-0-15

Model Number	Range, Pascals
2000-60PA†• •	0-60
2000-100PA†•	0-100
2000-125PA†•	0-125
2000-250PA	0-250
2000-300PA	0-300
2000-500PA	0-500
2000-750PA	0-750

Zero Center Ranges

2300-250PA	125-0-125
2300-500PA	250-0-250

Model Number	Range, Kilopascals
2000-1KPA	0-1
2000-1.5KPA	0-1.5
2000-2KPA	0-2
2000-3KPA	0-3
2000-4KPA	0-4
2000-5KPA	0-5
2000-8KPA	0-8
2000-10KPA	0-10
2000-15KPA	0-15
2000-20KPA	0-20
2000-25KPA	0-25
2000-30KPA	0-30

Zero Center Ranges

2300-1KPA	.5-0-.5
2300-3KPA	1.5-0-1.5

Accessories

A-299, Surface Mounting Bracket
A-300, Flat Flush Mounting Bracket.....
A-310A, 3-Way Vent Valve.....
A-321, Safety Relief Valve.....
A-432, Portable Kit .....
A-605, Air Filter Kit .....
A-610, Pipe Mount Kit .....

Options — To order, add suffix: I.E. 2001-ASF
ASF (Adjustable Signal Flag)
HP (High Pressure Option)
LT (Low Temperatures to -20°F)
MP (Med. Pressure Option)
SP (Setpoint Indicator)

Scale Overlays — Red, Green, Mirrored or Combination, Specify Locations

Special Purpose Ranges

Scale No. 2401	Scale No. 2402
Square Root	Blank Scale
Specify Range	Specify Range

Model 2000-00N. range -.05 to +.20" W.C. For room pressure monitoring

†These ranges calibrated for vertical scale position.
• Accuracy +/-3%. • • Accuracy +/-4%

1011R01-0298P

Continental Carbon Group

SECTION 5

DRAWING INDEX

SECTION 5

DRAWING INDEX

NOTE: THESE DRAWINGS ARE ARRANGED BY SIZE THEN SORTED NUMERICALLY.

DRAWING NUMBER	REVISION	TITLE
96960717	1	Ventsorb VSPE-200-T, Top Mount Fan GA

CONTINENTAL CARBON GROUP ♦ COPYRIGHT 2022 ♦ ALL RIGHTS RESERVED

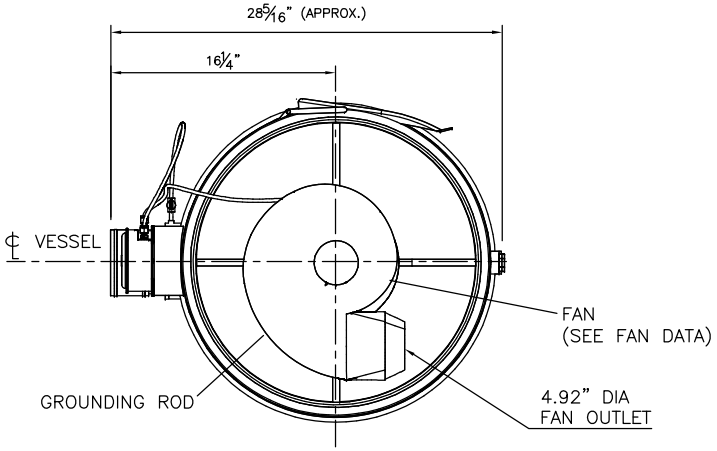

PLAN

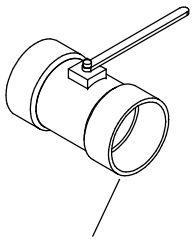

BILL OF MATERIAL

ITEM	QTY	PART NO.	DESCRIPTION	MAT'L
A	1	–	VENTSORB PE CANISTER	HDPE
B	1	–	DIFFERENTIAL PRESSURE GAUGE (DWYER 0–20)	–
C	2	–	¾" MALE NPT PLUG	PVC
D	1	–	4" SCH80 MNPT PIPE SPOOL – 4.75" LG.	PVC
E	1	–	4" FERNCO FLEX COUPLING	RUB.
F	1	–	–	–
G	1	–	–	–

FAN DATA
MFG: PLASTEC 15
MODEL: P15–2/1/60EXPCIP
CAPACITY: 150 CFM
PRESSURE: 2.5" WC
ARRG'T:
ROTATION: CCW–270
ISOLATORS: NO
WEATHER GUARD: NO

MOTOR DATA
HP: ½
VOLTS:115/208–230 1PH 60HZ
RPM: 3450
TYPE: TEXP
S.F.:
REMARKS:

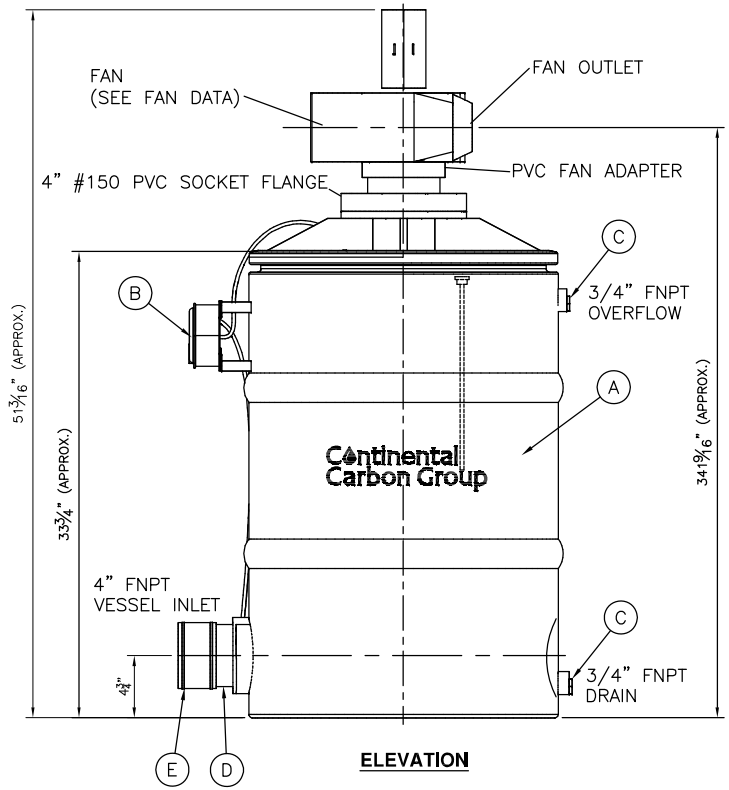

ELEVATION

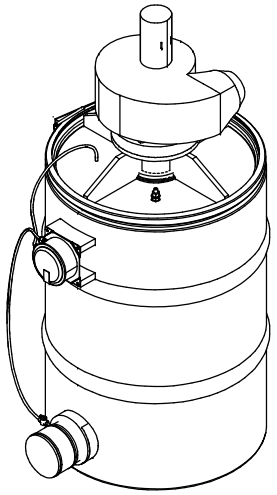

ISOMETRIC

NOTES:
1.) THREAD WHITE PLUGS INTO COUPLINGS, USE TEFLON TAPE ON THREADS TO MAKE A WATER TIGHT SEAL.
2.) PROCESS AIR INLET STREAM SHOULD BE NON–CONDENSING & PARTICULATE FREE FOR LONGEVITY OF THE CARBON ODOR CONTROL SYSTEM. OTHERWISE A GREASE FILTER/DEMISTER UNIT IS RECOMMENDED.

REV	DESCRIPTION	APP	DATE
1			

REVISIONS

TOLERANCES (unless otherwise specified)
ANGULAR ±0°30' DECIMAL (2 PLACES) ±.010
FRACTIONAL ±1/16" DECIMAL (3 PLACES) ±.005
DECIMAL (1 PLACE) ±.015 DECIMAL (4 PLACES) ±.0005

THIS DRAWING AND DESIGN IS THE PROPERTY OF CONTINENTAL CARBON GROUP AND IS NOT TO BE REPRODUCED IN WHOLE OR IN PART NOR EMPLOYED FOR ANY PURPOSE OTHER THAN SPECIFICALLY PERMITTED IN WRITING BY CONTINENTAL CARBON GROUP. THIS DRAWING LOANED SUBJECT TO RETURN ON DEMAND.

	NAME	DATE
DRAFTER	AS	APR 27,2022
DESIGNER		
CHECKER		
APPROVAL		
PROJECT No.		

Continental Carbon Group

CLIENT: H2 FLOW

TITLE: VENTSORB PE CANISTER ODOR CONTROL GENERAL ARRANGEMENT

DWG. Size: B | SHEET No.: 1 | SCALE: NTS

DWG. No.: 96960717 | REV.: 1

Section 3.7.12

Safety Equipment

Each container equipped with:

- **Eye wash stations are located in each container**
- **Smoke detectors:**
  - Container 1: SD-07-41
  - Container 2: SD-03-09
  - Container 3: SD-05-06
  -
  - Container 4: SD-07-22
- **Wall-mounted temperature sensors:**
  - Container 1: TT-01-14
  - Container 2: TT-03-11
  - Container 3: TT-06-06
  - Container 4: TT-07-06
- **Wall-mounted H_2S sensors:**
  - Container 1: AE-01-15
  - Container 2: AE-03-11
- **Wall-mounted CH4 sensors:**
  - Container 1: AE-01-15A
  - Container 2: AE-03-11A
- **Space heaters:**
  - Container 1: HTR-01-38
  - Container 2: HTR-03-49
  - Container 3: HTR-05-09

- Container 4: HTR-07-20

Section 4

Electrical Drawings

Section 4.1

Single Line Diagram

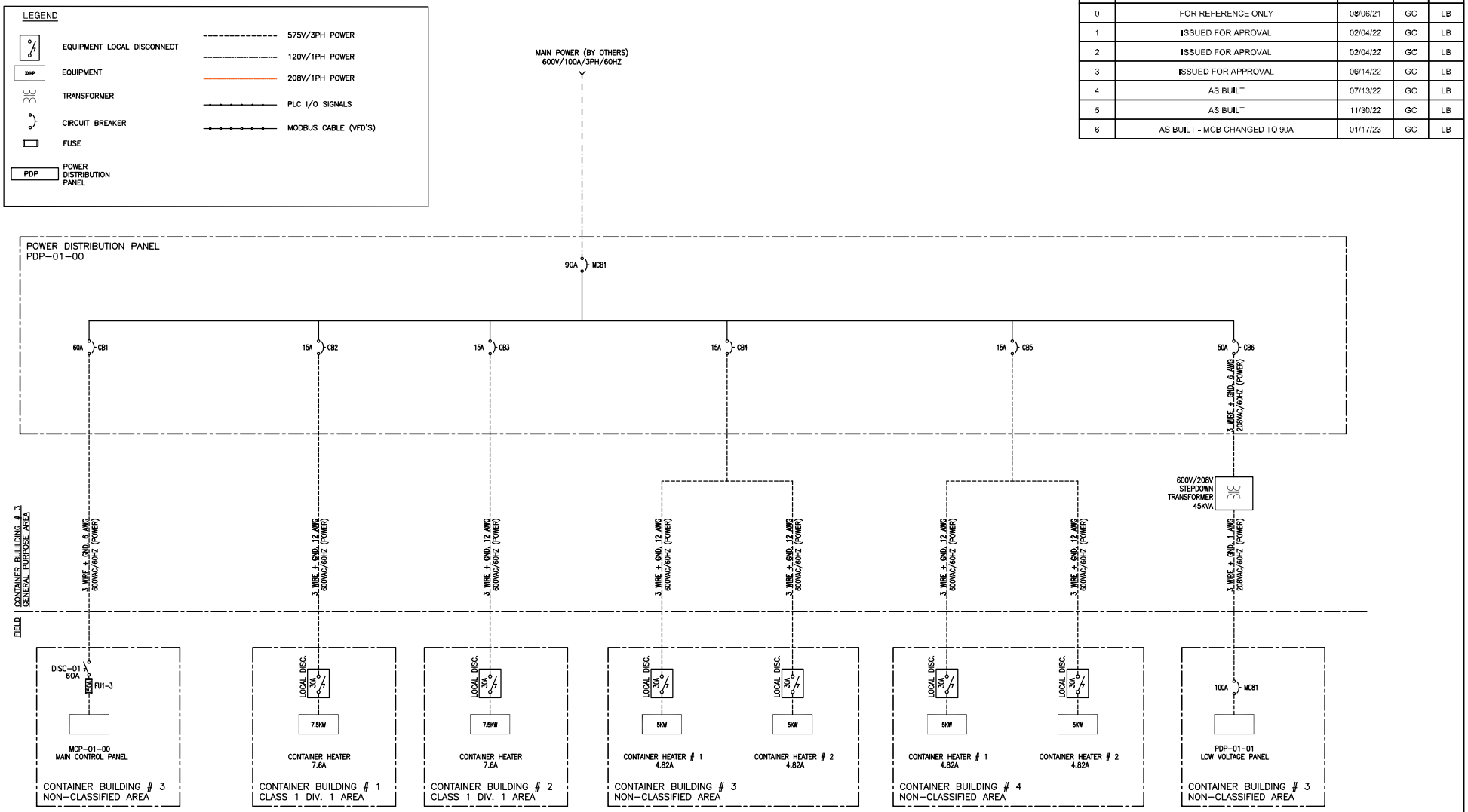

REV	DESCRIPTION	DATE	BY	APP'D
0	FOR REFERENCE ONLY	08/06/21	GC	LB
1	ISSUED FOR APROVAL	02/04/22	GC	LB
2	ISSUED FOR APROVAL	02/04/22	GC	LB
3	ISSUED FOR APPROVAL	06/14/22	GC	LB
4	AS BUILT	07/13/22	GC	LB
5	AS BUILT	11/30/22	GC	LB
6	AS BUILT - MCB CHANGED TO 90A	01/17/23	GC	LB

H2FLOW EQUIPMENT INC.
WATER AND WASTEWATER TREATMENT EQUIPMENT
580 OSTER LANE, VAUGHAN, ON, L4K 2C1 CANADA
TEL: (905) 660-9775 FAX: (905) 660-9744
www.h2flow.com

THIS DRAWING IS THE PROPERTY OF H2FLOW EQUIPMENT INC. AND SHALL NOT BE COPIED OR TRANSFERRED WITHOUT THE WRITTEN CONSENT OF H2FLOW EQUIPMENT INC.

DRAWN BY: GC	DATE: 08/06/21	PROJECT NAME: EUREKA STP CONTAINERIZED MBBR	TITLE: SINGLE LINE DIAGRAM
APP'D BY: LB	DATE: 08/06/21		DRAWING No.: Q-28520-40-01
SCALE: NTS			REV: 6
		ALL DIMENSION ARE IN "mm" UNLESS OTHERWISE SPECIFIED	SHEET 1 OF 7

R10 VERSION: 01 APRIL 07, 2021

REV	DESCRIPTION	DATE	BY	APP'D
0	FOR REFERENCE ONLY	08/06/21	GC	LB
1	ISSUED FOR APROVAL	02/04/22	GC	LB
2	ISSUED FOR APROVAL	02/04/22	GC	LB
3	ISSUED FOR APPROVAL	06/14/22	GC	LB
4	AS BUILT	07/13/22	GC	LB
5	AS BUILT	11/30/22	GC	LB
6	AS BUILT - MCB CHANGED TO 90A	01/17/23	GC	LB

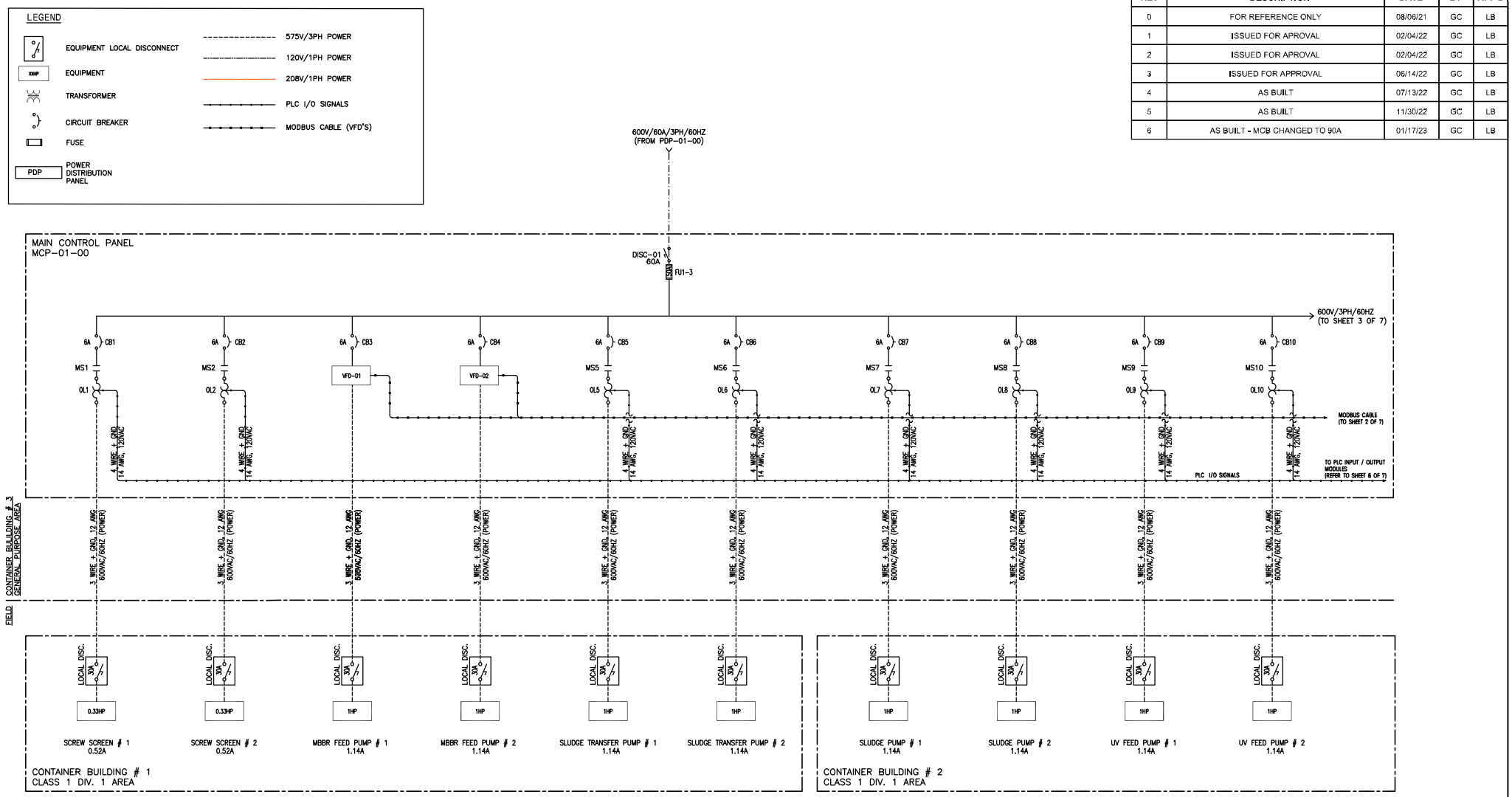

H2FLOW EQUIPMENT INC.
WATER AND WASTEWATER TREATMENT EQUIPMENT
580 OSTER LANE, VAUGHAN, ON, L4K 2C1 CANADA
TEL: (905) 880-9775 FAX: (905) 880-9744
www.h2flow.com

THIS DRAWING IS THE PROPERTY OF H2FLOW EQUIPMENT INC. AND SHALL NOT BE COPIED OR TRANSFERRED WITHOUT THE WRITTEN CONSENT OF H2FLOW EQUIPMENT INC.

DRAWN BY: GC	DATE: 08/06/21	PROJECT NAME: EUREKA STP CONTAINERIZED MBBR	TITLE: SINGLE LINE DIAGRAM
APP'D BY: LB	DATE: 08/06/21		DRAWING No.: Q-28520-40-01
SCALE: NTS			REV: 6
		ALL DIMENSION ARE IN "mm" UNLESS OTHERWISE SPECIFIED	SHEET 2 OF 7

R10 VERSION: 01 APRIL 07, 2021

LEGEND

- EQUIPMENT LOCAL DISCONNECT
- XXP EQUIPMENT
- TRANSFORMER
- CIRCUIT BREAKER
- FUSE
- PDP POWER DISTRIBUTION PANEL
- 575V/3PH POWER
- 120V/1PH POWER
- 208V/1PH POWER
- PLC I/O SIGNALS
- MODBUS CABLE (VFD'S)

REV	DESCRIPTION	DATE	BY	APP'D
0	FOR REFERENCE ONLY	08/06/21	GC	LB
1	ISSUED FOR APPROVAL	02/04/22	GC	LB
2	ISSUED FOR APPROVAL	02/04/22	GC	LB
3	ISSUED FOR APPROVAL	06/14/22	GC	LB
4	AS BUILT	07/13/22	GC	LB
5	AS BUILT	11/30/22	GC	LB
6	AS BUILT - MCB CHANGED TO 90A	01/17/23	GC	LB

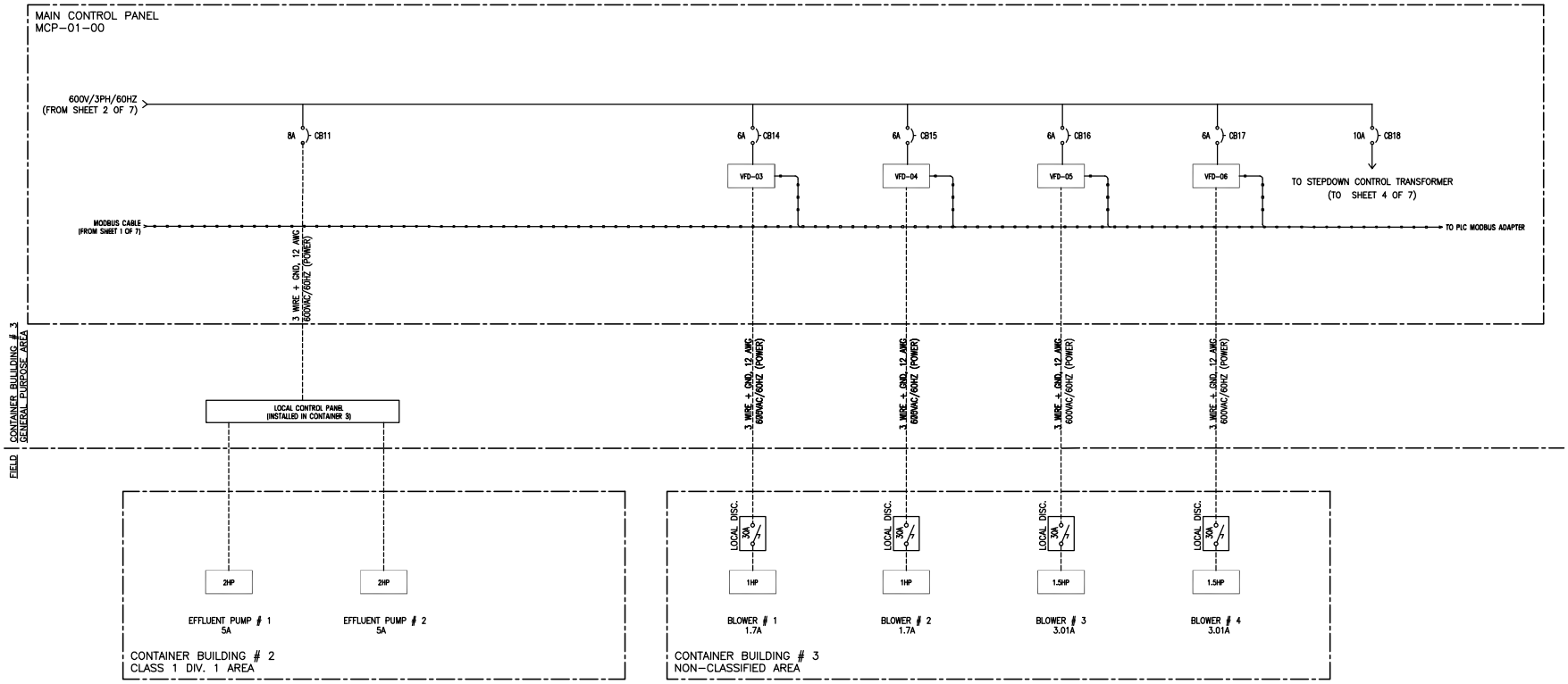

H2FLOW EQUIPMENT INC.

WATER AND WASTEWATER TREATMENT EQUIPMENT
580 OSTER LANE, VAUGHAN, ON, L4K 2C1 CANADA
TEL: (905) 660-9775 FAX: (905) 660-9744
www.h2flow.com

THIS DRAWING IS THE PROPERTY OF H2FLOW EQUIPMENT INC. AND SHALL NOT BE COPIED OR TRANSFERRED WITHOUT THE WRITTEN CONSENT OF H2FLOW EQUIPMENT INC.

DRAWN BY: GC	DATE: 08/06/21	PROJECT NAME: EUREKA STP CONTAINERIZED MBBR	TITLE: SINGLE LINE DIAGRAM
APP'D BY: LB	DATE: 08/06/21		DRAWING No.: Q-28520-40-01
SCALE: NTS		ALL DIMENSION ARE IN "mm" UNLESS OTHERWISE SPECIFIED	REV: 6
			SHEET 3 OF 7

R16 VERSION: 01 APRIL 07, 2021

REV	DESCRIPTION	DATE	BY	APP'D
0	FOR REFERENCE ONLY	08/06/21	GC	LB
1	ISSUED FOR APPROVAL	02/04/22	GC	LB
2	ISSUED FOR APPROVAL	02/04/22	GC	LB
3	ISSUED FOR APPROVAL	06/14/22	GC	LB
4	AS BUILT	07/13/22	GC	LB
5	AS BUILT	11/30/22	GC	LB
6	AS BUILT - MCB CHANGED TO 90A	01/17/23	GC	LB

LEGEND

- EQUIPMENT LOCAL DISCONNECT
- EQUIPMENT (XHP)
- TRANSFORMER
- CIRCUIT BREAKER
- FUSE
- PDP — POWER DISTRIBUTION PANEL
- 575V/3PH POWER
- 120V/1PH POWER
- 208V/1PH POWER
- PLC I/O SIGNALS
- MODBUS CABLE (VFD'S)

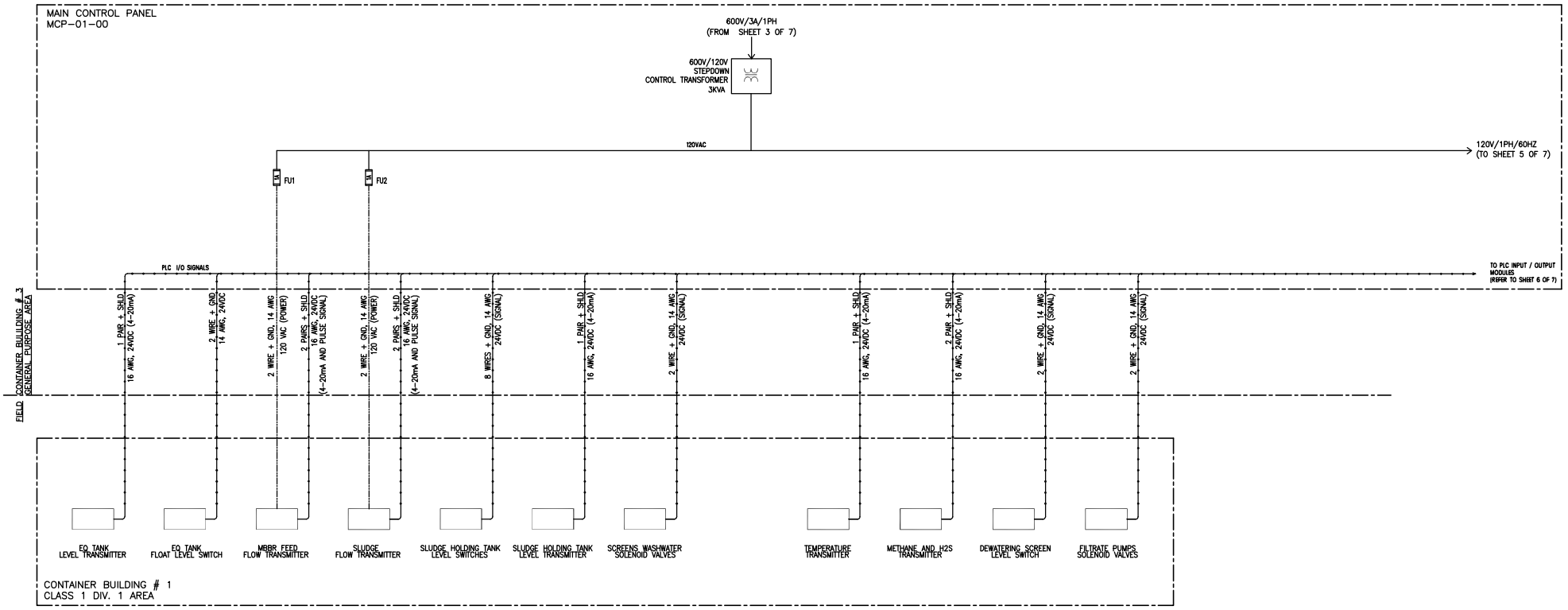

H2FLOW EQUIPMENT INC.
WATER AND WASTEWATER TREATMENT EQUIPMENT
580 OSTER LANE, VAUGHAN, ON, L4K 2C1 CANADA
TEL: (905) 660-9775 FAX: (905) 660-9744
www.h2flow.com

THIS DRAWING IS THE PROPERTY OF H2FLOW EQUIPMENT INC. AND SHALL NOT BE COPIED OR TRANSFERRED WITHOUT THE WRITTEN CONSENT OF H2FLOW EQUIPMENT INC.

DRAWN BY: GC	DATE: 08/06/21	PROJECT NAME: EUREKA STP CONTAINERIZED MBBR	TITLE: SINGLE LINE DIAGRAM
APP'D BY: LB	DATE: 08/06/21		DRAWING No.: Q-28520-40-01
SCALE: NTS		ALL DIMENSION ARE IN "mm" UNLESS OTHERWISE SPECIFIED	REV: 6
			SHEET 4 OF 7

R10 VERSION: 01 APRIL 07, 2021

LEGEND

- EQUIPMENT LOCAL DISCONNECT
- EQUIPMENT (XXHP)
- TRANSFORMER
- CIRCUIT BREAKER
- FUSE
- POWER DISTRIBUTION PANEL (PDP)
- 575V/3PH POWER
- 120V/1PH POWER
- 208V/1PH POWER
- PLC I/O SIGNALS
- MODBUS CABLE (VFD'S)

REV	DESCRIPTION	DATE	BY	APP'D
0	FOR REFERENCE ONLY	08/06/21	GC	LB
1	ISSUED FOR APPROVAL	02/04/22	GC	LB
2	ISSUED FOR APPROVAL	02/04/22	GC	LB
3	ISSUED FOR APPROVAL	06/14/22	GC	LB
4	AS BUILT	07/13/22	GC	LB
5	AS BUILT	11/30/22	GC	LB
6	AS BUILT - MCB CHANGED TO 90A	01/17/23	GC	LB

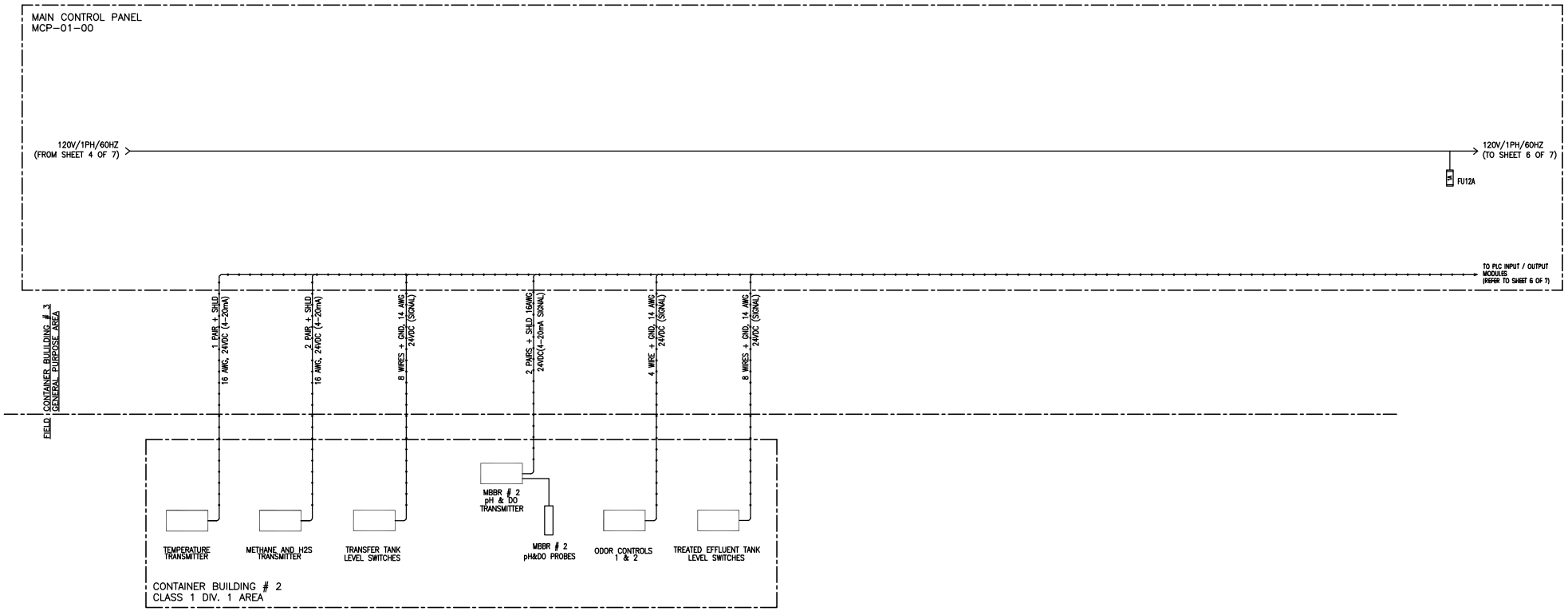

H2FLOW EQUIPMENT INC.
WATER AND WASTEWATER TREATMENT EQUIPMENT
580 OSTER LANE, VAUGHAN, ON, L4K 2C1 CANADA
TEL: (905) 880-9773 FAX: (905) 880-9744
www.h2flow.com

THIS DRAWING IS THE PROPERTY OF H2FLOW EQUIPMENT INC. AND SHALL NOT BE COPIED OR TRANSFERRED WITHOUT THE WRITTEN CONSENT OF H2FLOW EQUIPMENT INC.

DRAWN BY: GC	DATE: 08/06/21	PROJECT NAME: EUREKA STP CONTAINERIZED MBBR	TITLE: SINGLE LINE DIAGRAM
APP'D BY: LB	DATE: 08/06/21		DRAWING No.: Q-28520-40-01
SCALE: NTS		ALL DIMENSION ARE IN "mm" UNLESS OTHERWISE SPECIFIED	REV: 6
			SHEET 5 OF 7

R16 VERSION: 01 APRIL 07, 2021

LEGEND

- EQUIPMENT LOCAL DISCONNECT
- EQUIPMENT (XXHP)
- TRANSFORMER
- CIRCUIT BREAKER
- FUSE
- POWER DISTRIBUTION PANEL (PDP)
- 575V/3PH POWER
- 120V/1PH POWER
- 208V/1PH POWER
- PLC I/O SIGNALS
- MODBUS CABLE (VFD'S)

REV	DESCRIPTION	DATE	BY	APP'D
0	FOR REFERENCE ONLY	08/06/21	GC	LB
1	ISSUED FOR APPROVAL	02/04/22	GC	LB
2	ISSUED FOR APPROVAL	02/04/22	GC	LB
3	ISSUED FOR APPROVAL	06/14/22	GC	LB
4	AS BUILT	07/13/22	GC	LB
5	AS BUILT	11/30/22	GC	LB
6	AS BUILT - MCB CHANGED TO 90A	01/17/23	GC	LB

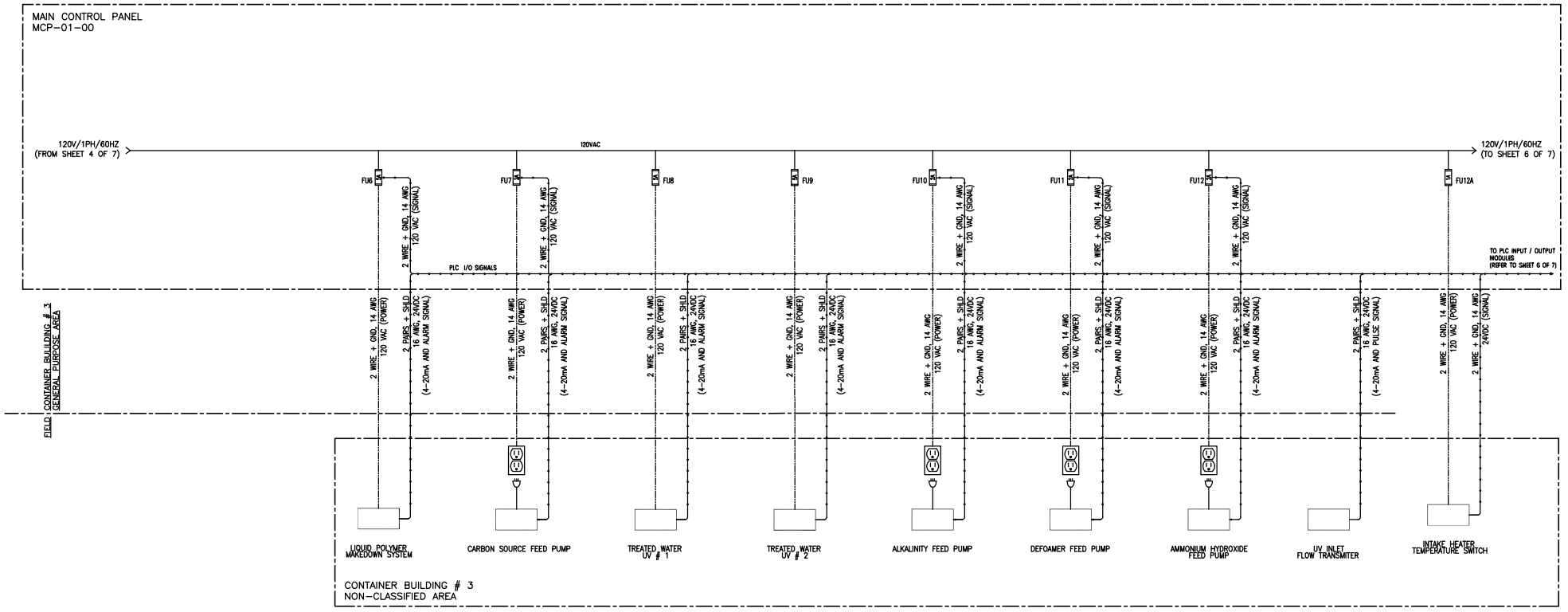

H2FLOW EQUIPMENT INC.

WATER AND WASTEWATER TREATMENT EQUIPMENT
580 OSTER LANE, VAUGHAN, ON, L4K 2C1 CANADA
TEL: (905) 660-9775 FAX: (905) 660-9744
www.h2flow.com

THIS DRAWING IS THE PROPERTY OF H2FLOW EQUIPMENT INC. AND SHALL NOT BE COPIED OR TRANSFERRED WITHOUT THE WRITTEN CONSENT OF H2FLOW EQUIPMENT INC.

DRAWN BY: GC	DATE: 08/06/21	PROJECT NAME: EUREKA STP CONTAINERIZED MBBR	TITLE: SINGLE LINE DIAGRAM
APP'D BY: LB	DATE: 08/06/21		DRAWING No.: Q-28520-40-01
SCALE: NTS		ALL DIMENSION ARE IN "mm" UNLESS OTHERWISE SPECIFIED	REV: 6
R16	VERSION: 01	APRIL 07, 2021	SHEET 6 OF 7

REV	DESCRIPTION	DATE	BY	APP'D
0	FOR REFERENCE ONLY	08/06/21	GC	LB
1	ISSUED FOR APPROVAL	02/04/22	GC	LB
2	ISSUED FOR APPROVAL	02/04/22	GC	LB
3	ISSUED FOR APPROVAL	06/14/22	GC	LB
4	AS BUILT	07/13/22	GC	LB
5	AS BUILT	11/30/22	GC	LB
6	AS BUILT - MCB CHANGED TO 90A	01/17/23	GC	LB

LEGEND

- EQUIPMENT LOCAL DISCONNECT
- EQUIPMENT (XXHP)
- TRANSFORMER
- CIRCUIT BREAKER
- FUSE
- PDP — POWER DISTRIBUTION PANEL
- 575V/3PH POWER
- 120V/1PH POWER
- 208V/1PH POWER
- PLC I/O SIGNALS
- MODBUS CABLE (VFD'S)

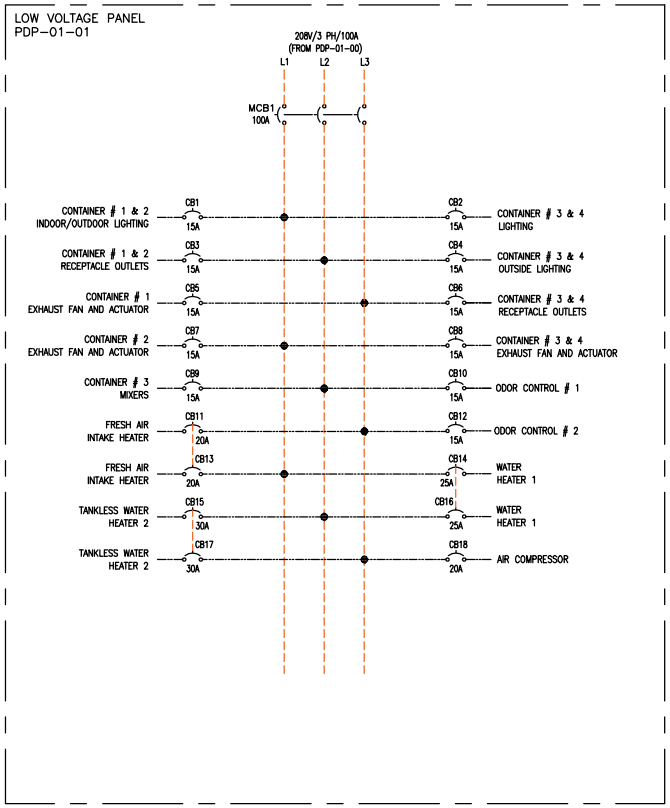

H2FLOW EQUIPMENT INC.

WATER AND WASTEWATER TREATMENT EQUIPMENT
580 OSTER LANE, VAUGHAN, ON, L4K 2C1 CANADA
TEL: (905) 880-9775 FAX: (905) 880-9744
www.h2flow.com

THIS DRAWING IS THE PROPERTY OF H2FLOW EQUIPMENT INC. AND SHALL NOT BE COPIED OR TRANSFERRED WITHOUT THE WRITTEN CONSENT OF H2FLOW EQUIPMENT INC.

DRAWN BY: GC	DATE: 08/06/21	PROJECT NAME: EUREKA STP CONTAINERIZED MBBR	TITLE: SINGLE LINE DIAGRAM
APP'D BY: LB	DATE: 08/06/21		DRAWING No.: Q-28520-40-01
SCALE: NTS		ALL DIMENSION ARE IN "mm" UNLESS OTHERWISE SPECIFIED	REV: 6
			SHEET 7 OF 7

R10 VERSION: 01 APRIL 07, 2021

Section 4.2

Control Panel Schematic

SHEET #	DRAWING DESCRIPTION 1	DRAWING DESCRIPTION 2	DRAWING DESCRIPTION 3
001	TABLE OF CONTENTS		
100	3-PHASE POWER DISTRIBUTION	600VAC POWER	
103	3-PHASE POWER DISTRIBUTION	SCREEN MOTOR A	
104	3-PHASE POWER DISTRIBUTION	SCREEN MOTOR B	
105	3-PHASE POWER DISTRIBUTION	MBBR FEED PUMP A	
106	3-PHASE POWER DISTRIBUTION	MBBR FEED PUMP B	
107	3-PHASE POWER DISTRIBUTION	SLUDGE TRANSFER PUMP A	
108	3-PHASE POWER DISTRIBUTION	SLUDGE TRANSFER PUMP B	
109	3-PHASE POWER DISTRIBUTION	SLUDGE PUMP A	
110	3-PHASE POWER DISTRIBUTION	SLUDGE PUMP B	
111	3-PHASE POWER DISTRIBUTION	UV FEED PUMP A	
112	3-PHASE POWER DISTRIBUTION	UV FEED PUMP B	
113	3-PHASE POWER DISTRIBUTION	SPARE	
114	3-PHASE POWER DISTRIBUTION	SPARE	
115	3-PHASE POWER DISTRIBUTION	SLUDGE HOLDING TANK BLOWER	
116	3-PHASE POWER DISTRIBUTION	EQ TANK BLOWER	
117	3-PHASE POWER DISTRIBUTION	MBBR TANK BLOWER 1	
118	3-PHASE POWER DISTRIBUTION	MBBR TANK BLOWER 2	
119	3-PHASE POWER DISTRIBUTION	CONTAINER 1 ODOR CONTROL	
120	3-PHASE POWER DISTRIBUTION	CONTAINER 2 ODOR CONTROL	
200	1-PHASE POWER DISTRIBUTION	120VAC POWER	
205	1-PHASE POWER DISTRIBUTION	120VAC POWER	
206	1-PHASE POWER DISTRIBUTION	120VAC POWER	
207	1-PHASE POWER DISTRIBUTION	120VAC POWER	
208	1-PHASE POWER DISTRIBUTION	120VAC POWER	
300	1-PHASE POWER DISTRIBUTION	24VDC POWER	
305	1-PHASE POWER DISTRIBUTION	24VDC POWER	HMI & ETHERNET SWITCH
310	1-PHASE POWER DISTRIBUTION	24VDC POWER	E/IP-MODBUS GATEWAY
400	INTRINSIC SAFE BARRIERS	DIGITAL INPUTS & ANALOG INPUTS	
401	INTRINSIC SAFE BARRIERS	ANALOG INPUTS	
500	SAFETY CIRCUIT	EMERGENCY STOP	
501	SAFETY CIRCUIT	EMERGENCY STOP	SCREEN ROOM A
502	SAFETY CIRCUIT	EMERGENCY STOP	SCREEN ROOM B
600	PLC RACK 0 LAYOUT		
601	PLC RACK 0 SLOT 0	CONTROLLER - POWER & NETWORK	
602	PLC RACK 0 SLOT 1	DIGITAL INPUTS	I:0/1.00 - I:0/1.15
603	PLC RACK 0 SLOT 1	DIGITAL INPUTS	I:0/2.00 - I:0/2.15
604	PLC RACK 0 SLOT 2	DIGITAL INPUTS	I:0/3.00 - I:0/3.15
605	PLC RACK 0 SLOT 3	DIGITAL OUTPUTS	O:0/4.00 - O:0/4.07
606	PLC RACK 0 SLOT 4	DIGITAL OUTPUTS	O:0/5.00 - O:0/5.07
607	PLC RACK 0 SLOT 5	ANALOG INPUTS	AI:0/6.00 - AI:0/6.07
608	PLC RACK 0 SLOT 6	ANALOG INPUTS	AI:0/7.00 - AI:0/7.07
609	PLC RACK 0 SLOT 7	ANALOG INPUTS	AI:0/8.00 - AI:0/8.03
610	PLC RACK 0 SLOT 8	ANALOG OUTPUTS	AO:0/9.00 - AO:0/9.07
700	SOLENOID VALVES		
800	MAIN CONTROL ENCLOSURE (MCE)	INTERIOR PANEL	
801	MAIN CONTROL ENCLOSURE (MCE)	EXTERIOR PANEL	
805	SCREEN MOTOR A & B	OPERATOR STATION LAYOUT	
810	INTRINSIC SAFE BARRIERS	JUNCTION BOX LAYOUT	
850	TERMINAL LIST	MAIN CONTROL ENCLOSURE (MCE)	
870	BILL OF MATERIALS	MAIN CONTROL ENCLOSURE (MCE)	
871	BILL OF MATERIALS	MAIN CONTROL ENCLOSURE (MCE)	
872	BILL OF MATERIALS	MAIN CONTROL ENCLOSURE (MCE)	
875	BILL OF MATERIALS	SCREEN MOTOR A & B	OPERATOR STATION
876	BILL OF MATERIALS	INTRINSIC SAFE BARRIERS	JUNCTION BOX LAYOUT

Poweron CONTROL SYSTEMS LTD.
www.poweron.ca
248741
Assembled in Canada
Serial: 26330001

Industrial Control Panel
Manufactured for : H2FLOW
Model : EUREKA STP CONTAINERIZED MBBR
Drawing # : 2633
Supply : 600VAC, 3Ø , 60Hz, 50AMP, 3-WIRE

Enclosure :TYPE 4
Temp :0-40 °C
SCR : 22 kA
F.L.A : 38.52 A
Largest Motor F.L.A. : 2.4 A
Mfg. Date. : 06/2022

Intrinsic Electrical Rating : 24VDC / 178.4mA

NOTE: FOR FIELD WIRING INSTALLATION INSTRUCTIONS REFER DRAWING:

DOC. NO. 1160145E.PDF (KFD2-SRA-Ex4)
DOC. NO. 1160439A.PDF (KFD2-STC5-Ex2)

DRAWING REVISION TABLE

DATE	REV	DESCRIPTION	BY
2023-10-26	D2	SCREEN ROOM SRs	
2024-08-20	D8	REDLINES	MI
2025-08-06	D9	UPDATE kA RATING	DM
2025-11-25	D10	CUSTOMER REDLINES	MI

PROJECT REVISION:

D10 - AS INSTALLED
2025-11-25

NOTES:

Poweron CONTROL SYSTEMS LTD.

THIS DRAWING IS PROPERTY OF POWERON CONTROL SYSTEM LTD. THIS DRAWING IS TO BE USED ONLY FOR THE PURPOSE FOR WHICH IT IS INTENDED. IN ACCEPTING THIS DRAWING, YOU AGREE THAT THE INFORMATION CONTAINED HEREIN WILL NOT BE COPIED, REPRODUCED, DISPLAYED OR PASSED ON TO A THIRD PARTY WITHOUT POWERON CONTROL SYSTEM LTD'S WRITTEN CONSENT.

PROJECT:
H2FLOW
EUREKA STP CONTAINERIZED MBBR

TITLE:
TABLE OF CONTENTS

DESIGNED BY: P. CHAM		DATE:	2022-04-18
CHECKED BY: P. CHAM		DWG #:	001
PROJ #:	2633	SHEET:	001

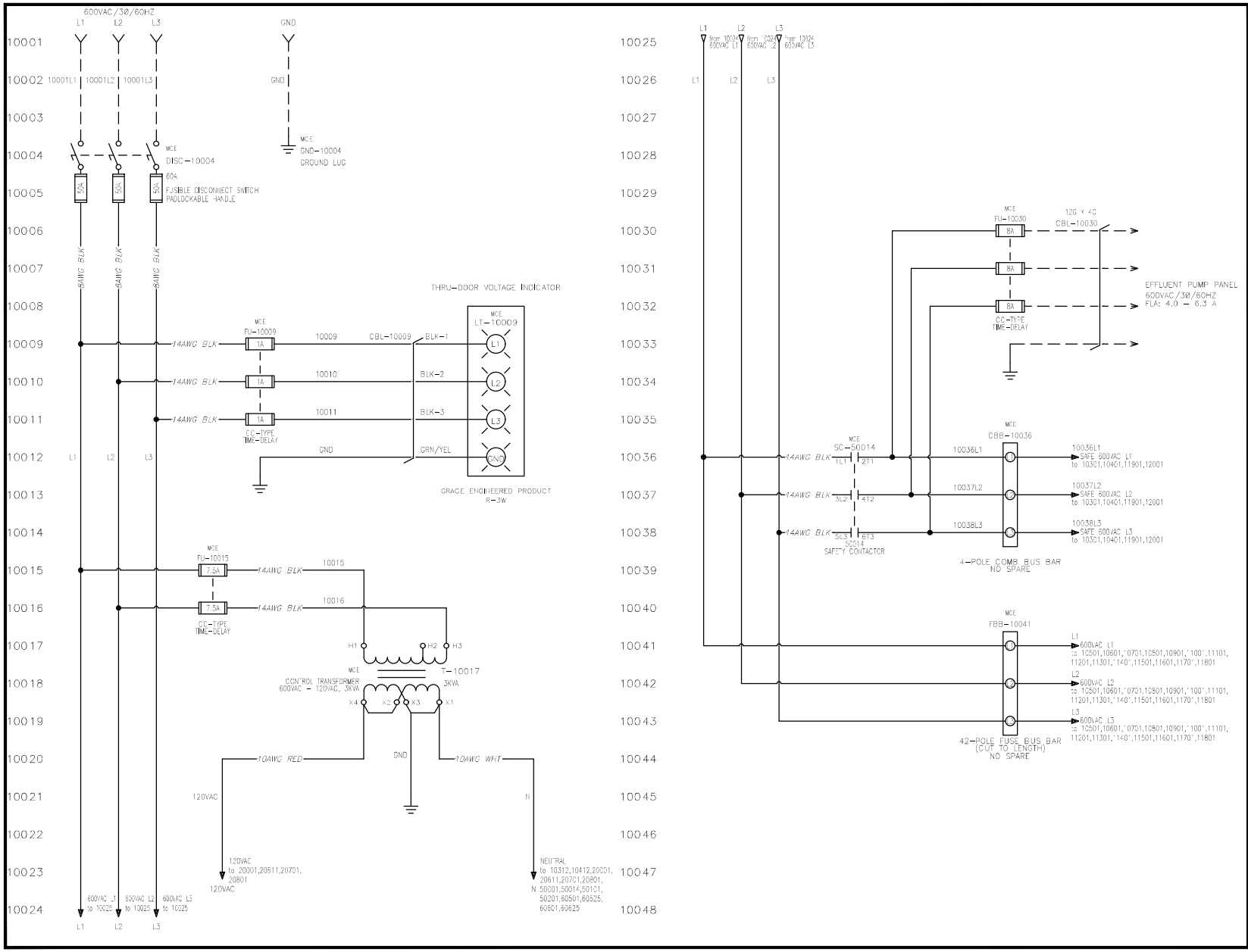

DRAWING REVISION TABLE

DATE	REV	DESCRIPTION	BY
2023-10-26	D2	SCREEN ROOM SRs	
2024-08-20	D8	REDLINES	MI
2025-08-06	D9	UPDATE kA RATING	DM
2025-11-25	D10	CUSTOMER REDLINES	MI

PROJECT REVISION:

D10 - AS INSTALLED
2025-11-25

NOTES:

THIS DRAWING IS PROPERTY OF POWERON CONTROL SYSTEM LTD. THIS DRAWING IS TO BE USED ONLY FOR THE PURPOSE FOR WHICH IT IS INTENDED. IN ACCEPTING THIS DRAWING, YOU AGREE THAT THE INFORMATION CONTAINED HEREIN WILL NOT BE COPIED, REPRODUCED, DISPLAYED OR PASSED ON TO A THIRD PARTY WITHOUT POWERON CONTROL SYSTEM LTD'S WRITTEN CONSENT.

PROJECT:
H2FLOW
EUREKA STP CONTAINERIZED MBBR

TITLE:
3-PHASE POWER DISTRIBUTION
600VAC POWER

DESIGNED BY: P. CHAM		DATE:	2022-04-18
CHECKED BY: P. CHAM		DWG #:	100
PROJ #:	2633	SHEET:	100

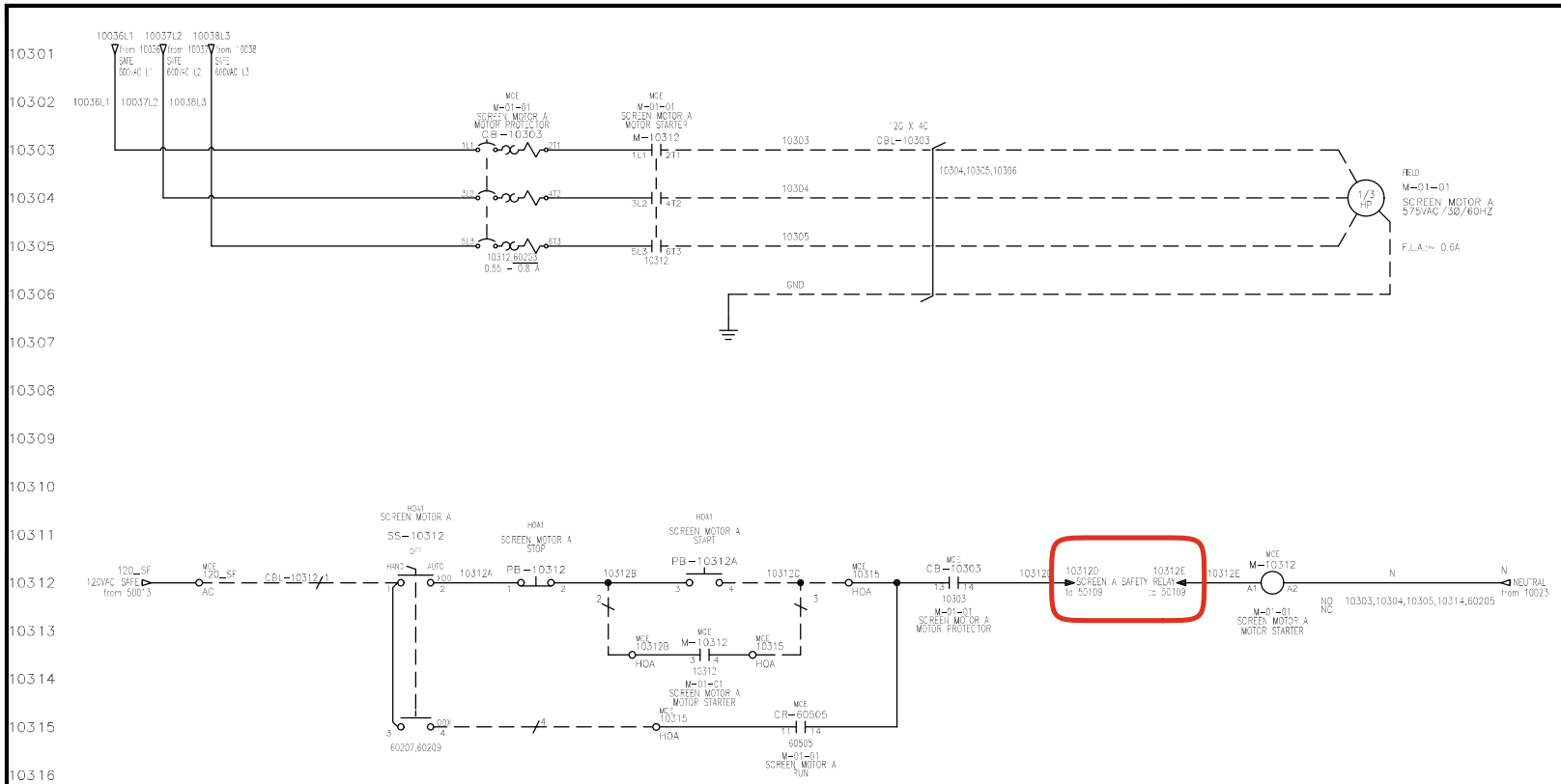

SAFETY CIRCUIT ON SH. 501

DRAWING REVISION TABLE

DATE	REV	DESCRIPTION	BY
2023-10-26	D2	SCREEN ROOM SRs	
2024-08-20	D8	REDLINES	MI
2025-08-06	D9	UPDATE kA RATING	DM
2025-11-25	D10	CUSTOMER REDLINES	MI

PROJECT REVISION:

D10 - AS INSTALLED
2025-11-25

NOTES:

Poweron CONTROL SYSTEMS LTD.

THIS DRAWING IS PROPERTY OF POWERON CONTROL SYSTEM LTD. THIS DRAWING IS TO BE USED ONLY FOR THE PURPOSE FOR WHICH IT IS INTENDED. IN ACCEPTING THIS DRAWING, YOU AGREE THAT THE INFORMATION CONTAINED HEREIN WILL NOT BE COPIED, REPRODUCED, DISPLAYED OR PASSED ON TO A THIRD PARTY WITHOUT POWERON CONTROL SYSTEM LTD'S WRITTEN CONSENT.

PROJECT:
H2FLOW
EUREKA STP CONTAINERIZED MBBR

TITLE:
3-PHASE POWER DISTRIBUTION
SCREEN MOTOR A

DESIGNED BY: P. CHAM		DATE: 2022-04-18	
CHECKED BY: P. CHAM		DWG #: 103	
PROJ #: 2633		SHEET: 103	

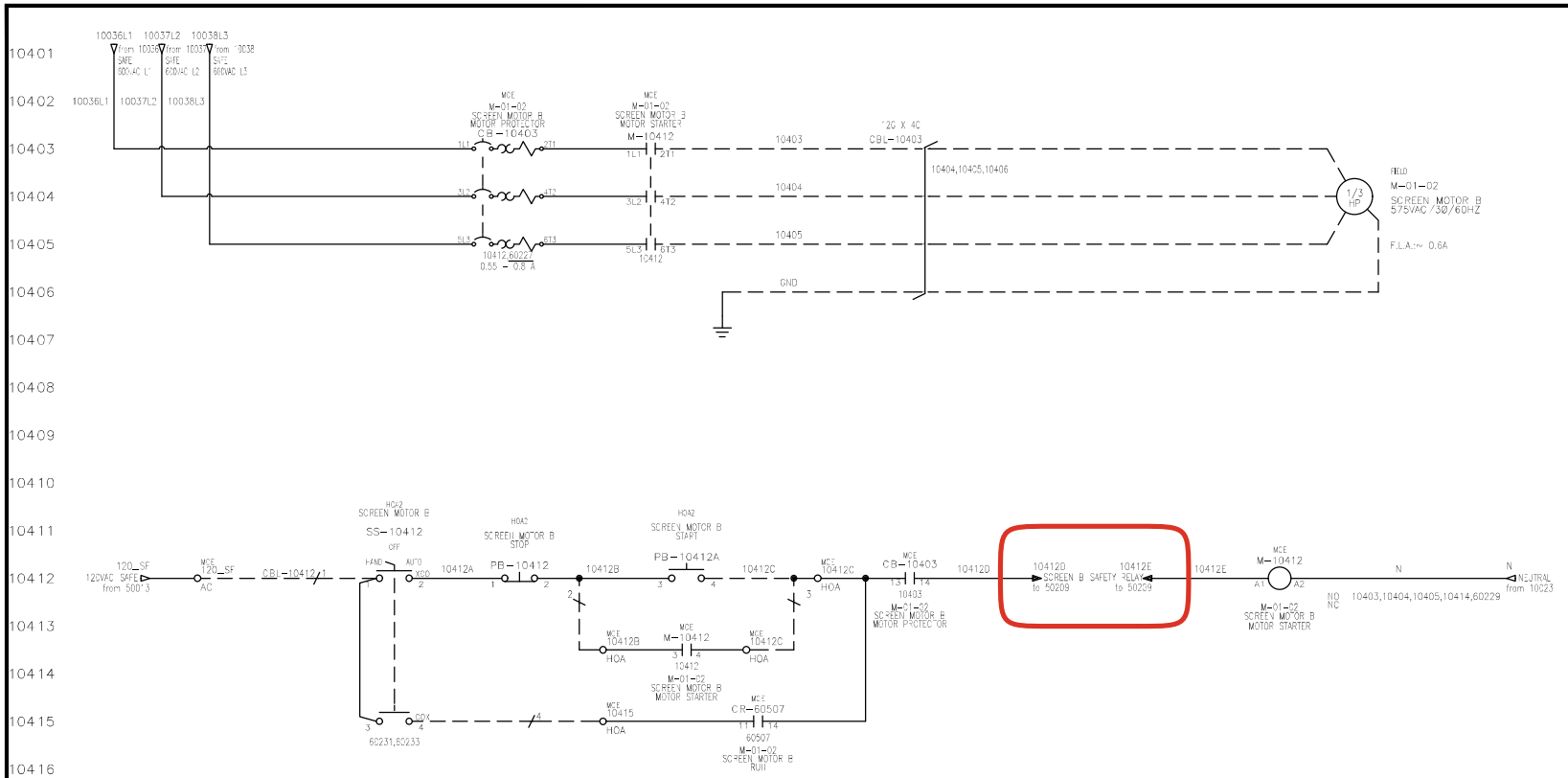

SAFETY CIRCUIT ON SH. 502

DRAWING REVISION TABLE

DATE	REV	DESCRIPTION	BY
2023-10-26	D2	SCREEN ROOM SRs	
2024-08-20	D8	REDLINES	MI
2025-08-06	D9	UPDATE kA RATING	DM
2025-11-25	D10	CUSTOMER REDLINES	MI

PROJECT REVISION:

D10 - AS INSTALLED
2025-11-25

NOTES:

Poweron CONTROL SYSTEMS LTD.

THIS DRAWING IS PROPERTY OF POWERON CONTROL SYSTEM LTD. THIS DRAWING IS TO BE USED ONLY FOR THE PURPOSE FOR WHICH IT IS INTENDED. IN ACCEPTING THIS DRAWING, YOU AGREE THAT THE INFORMATION CONTAINED HEREIN WILL NOT BE COPIED, REPRODUCED, DISPLAYED OR PASSED ON TO A THIRD PARTY WITHOUT POWERON CONTROL SYSTEM LTD'S WRITTEN CONSENT.

PROJECT:
H2FLOW
EUREKA STP CONTAINERIZED MBBR

TITLE:
3-PHASE POWER DISTRIBUTION
SCREEN MOTOR B

DESIGNED BY: P. CHAM		DATE: 2022-04-18	
CHECKED BY: P. CHAM		DWG #: 104	
PROJ #: 2633		SHEET: 104	

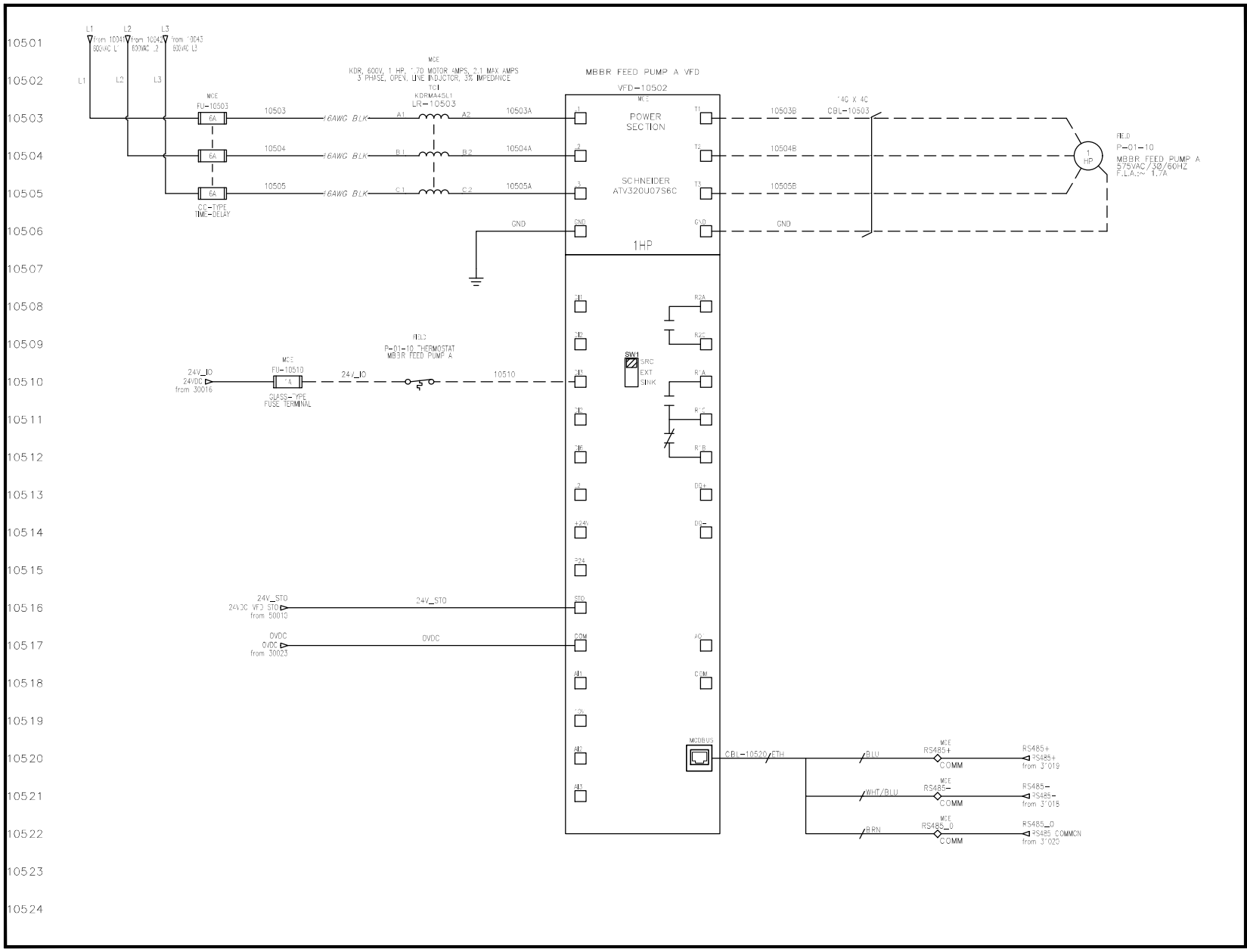

DRAWING REVISION TABLE			
DATE	REV	DESCRIPTION	BY
2023-10-26	D2	SCREEN ROOM SRs	
2024-08-20	D8	REDLINES	MI
2025-08-06	D9	UPDATE kA RATING	DM
2025-11-25	D10	CUSTOMER REDLINES	MI

PROJECT REVISION:

D10 - AS INSTALLED
2025-11-25

NOTES:

THIS DRAWING IS PROPERTY OF POWERON CONTROL SYSTEM LTD. THIS DRAWING IS TO BE USED ONLY FOR THE PURPOSE FOR WHICH IT IS INTENDED. IN ACCEPTING THIS DRAWING, YOU AGREE THAT THE INFORMATION CONTAINED HEREIN WILL NOT BE COPIED, REPRODUCED, DISPLAYED OR PASSED ON TO A THIRD PARTY WITHOUT POWERON CONTROL SYSTEM LTD'S WRITTEN CONSENT.

PROJECT:
H2FLOW
EUREKA STP CONTAINERIZED MBBR

TITLE:
3-PHASE POWER DISTRIBUTION
MBBR FEED PUMP A

DESIGNED BY: P. CHAM	DATE: 2022-04-18
CHECKED BY: P. CHAM	DWG #: 105
PROJ #: 2633	SHEET: 105

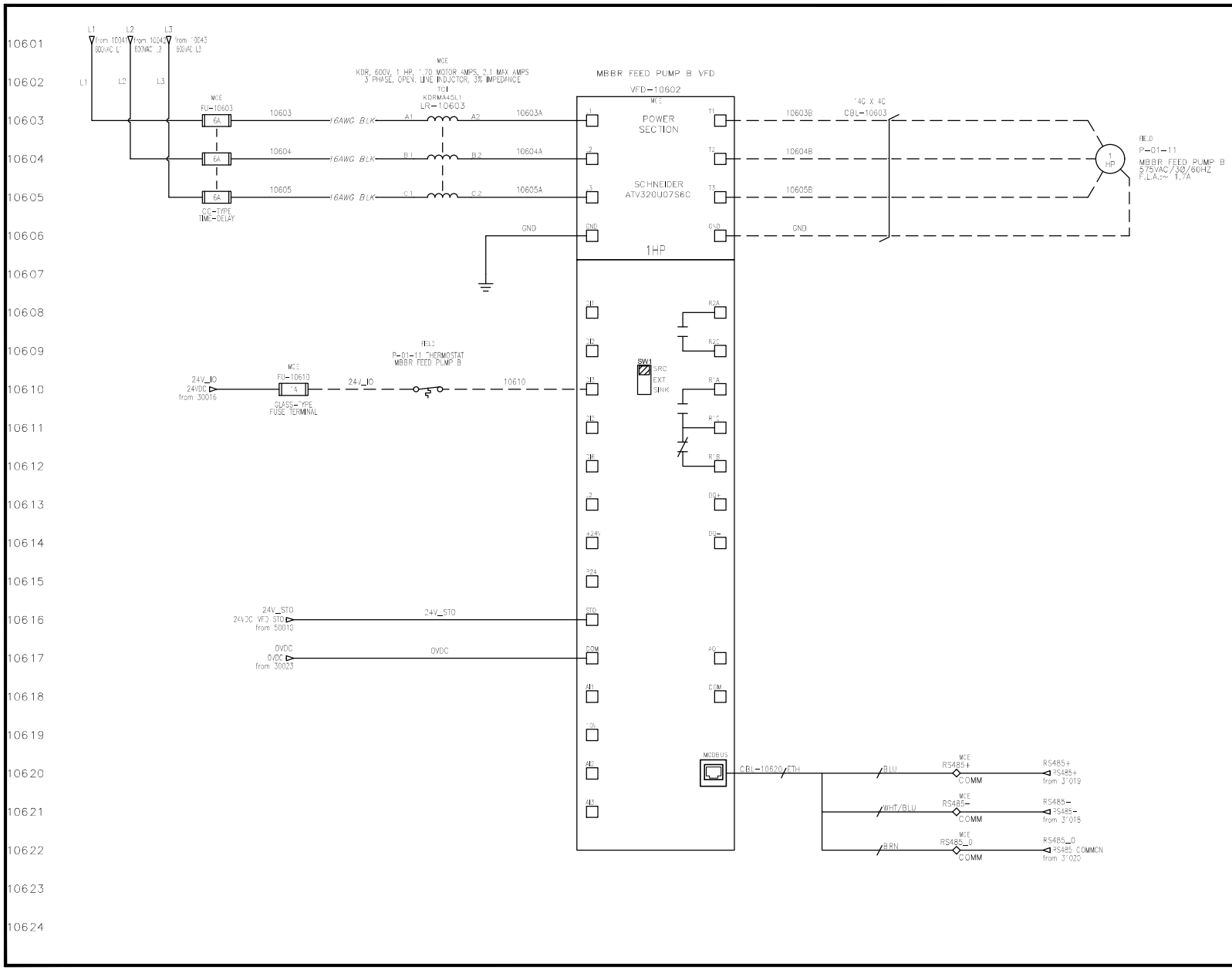

DRAWING REVISION TABLE			
DATE	REV	DESCRIPTION	BY
2023-10-26	D2	SCREEN ROOM SRs	
2024-08-20	D8	REDLINES	MI
2025-08-06	D9	UPDATE kA RATING	DM
2025-11-25	D10	CUSTOMER REDLINES	MI

PROJECT REVISION:

D10 - AS INSTALLED
2025-11-25

NOTES:

Poweron CONTROL SYSTEMS LTD.

THIS DRAWING IS PROPERTY OF POWERON CONTROL SYSTEM LTD. THIS DRAWING IS TO BE USED ONLY FOR THE PURPOSE FOR WHICH IT IS INTENDED. IN ACCEPTING THIS DRAWING, YOU AGREE THAT THE INFORMATION CONTAINED HEREIN WILL NOT BE COPIED, REPRODUCED, DISPLAYED OR PASSED ON TO A THIRD PARTY WITHOUT POWERON CONTROL SYSTEM LTD'S WRITTEN CONSENT.

PROJECT:
H2FLOW
EUREKA STP CONTAINERIZED MBBR

TITLE:
3-PHASE POWER DISTRIBUTION
MBBR FEED PUMP B

DESIGNED BY: P. CHAM	DATE: 2022-04-18
CHECKED BY: P. CHAM	DWG #: 106
PROJ #: 2633	SHEET: 106

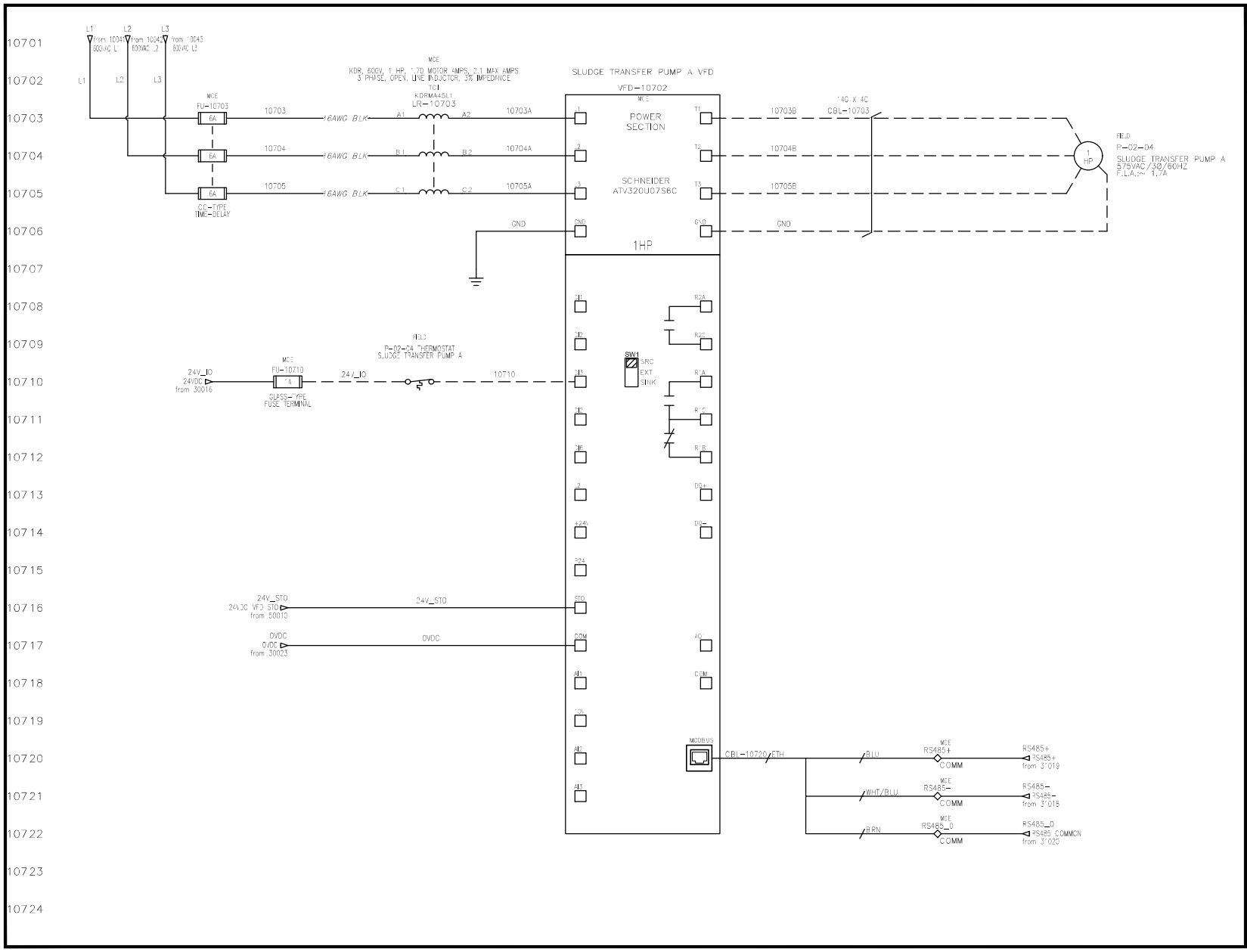

DRAWING REVISION TABLE			
DATE	REV	DESCRIPTION	BY
2023-10-26	D2	SCREEN ROOM SRs	
2024-08-20	D8	REDLINES	MI
2025-08-06	D9	UPDATE kA RATING	DM
2025-11-25	D10	CUSTOMER REDLINES	MI

PROJECT REVISION:

D10 - AS INSTALLED
2025-11-25

NOTES:

Poweron CONTROL SYSTEMS LTD.

THIS DRAWING IS PROPERTY OF POWERON CONTROL SYSTEM LTD. THIS DRAWING IS TO BE USED ONLY FOR THE PURPOSE FOR WHICH IT IS INTENDED. IN ACCEPTING THIS DRAWING, YOU AGREE THAT THE INFORMATION CONTAINED HEREIN WILL NOT BE COPIED, REPRODUCED, DISPLAYED OR PASSED ON TO A THIRD PARTY WITHOUT POWERON CONTROL SYSTEM LTD'S WRITTEN CONSENT.

PROJECT:
H2FLOW
EUREKA STP CONTAINERIZED MBBR

TITLE:
3-PHASE POWER DISTRIBUTION
SLUDGE TRANSFER PUMP A

DESIGNED BY: P. CHAM	DATE: 2022-04-18
CHECKED BY: P. CHAM	DWG #: 107
PROJ #: 2633	SHEET: 107

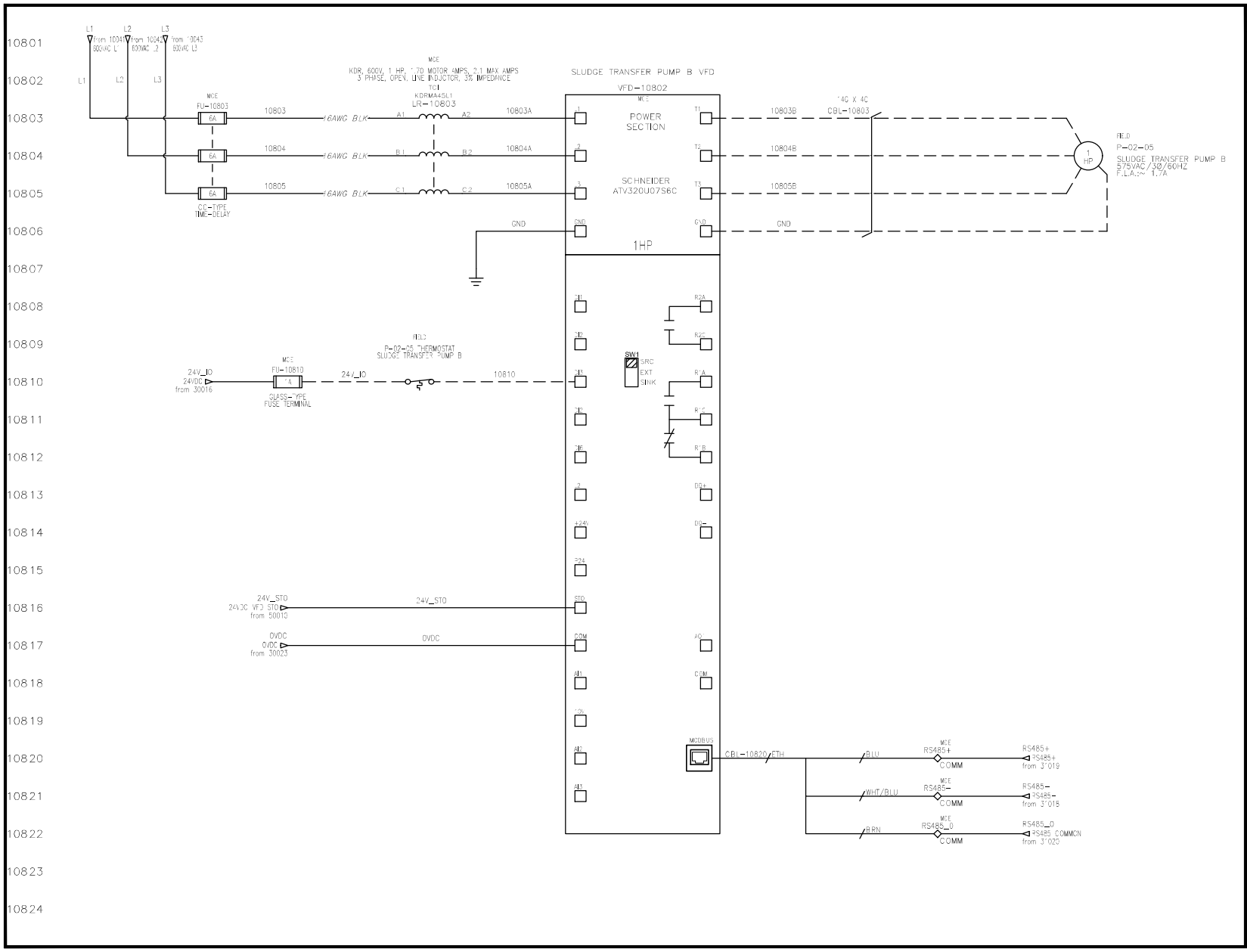

DRAWING REVISION TABLE

DATE	REV	DESCRIPTION	BY
2023-10-26	D2	SCREEN ROOM SRs	
2024-08-20	D8	REDLINES	MI
2025-08-06	D9	UPDATE kA RATING	DM
2025-11-25	D10	CUSTOMER REDLINES	MI

PROJECT REVISION:

D10 - AS INSTALLED
2025-11-25

NOTES:

Poweron CONTROL SYSTEMS LTD.

THIS DRAWING IS PROPERTY OF POWERON CONTROL SYSTEM LTD. THIS DRAWING IS TO BE USED ONLY FOR THE PURPOSE FOR WHICH IT IS INTENDED. IN ACCEPTING THIS DRAWING, YOU AGREE THAT THE INFORMATION CONTAINED HEREIN WILL NOT BE COPIED, REPRODUCED, DISPLAYED OR PASSED ON TO A THIRD PARTY WITHOUT POWERON CONTROL SYSTEM LTD'S WRITTEN CONSENT.

PROJECT:
H2FLOW
EUREKA STP CONTAINERIZED MBBR

TITLE:
3-PHASE POWER DISTRIBUTION
SLUDGE TRANSFER PUMP B

DESIGNED BY: P. CHAM	DATE: 2022-04-18
CHECKED BY: P. CHAM	DWG #: 108
PROJ #: 2633	SHEET: 108

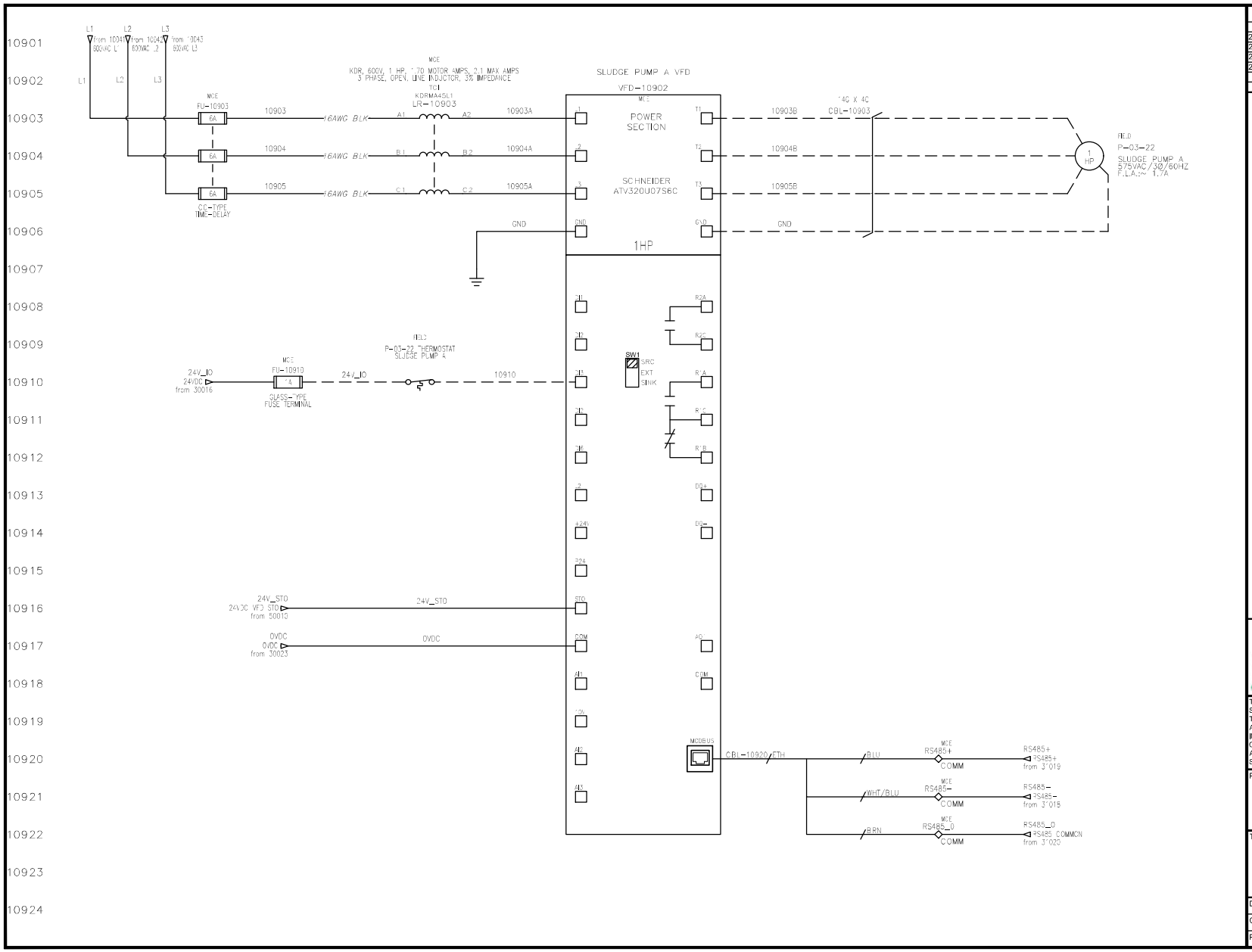

DRAWING REVISION TABLE

DATE	REV	DESCRIPTION	BY
2023-10-26	D2	SCREEN ROOM SRs	
2024-08-20	D8	REDLINES	MI
2025-08-06	D9	UPDATE kA RATING	DM
2025-11-25	D10	CUSTOMER REDLINES	MI

PROJECT REVISION:

D10 - AS INSTALLED
2025-11-25

NOTES:

Poweron CONTROL SYSTEMS LTD.

THIS DRAWING IS PROPERTY OF POWERON CONTROL SYSTEM LTD. THIS DRAWING IS TO BE USED ONLY FOR THE PURPOSE FOR WHICH IT IS INTENDED. IN ACCEPTING THIS DRAWING, YOU AGREE THAT THE INFORMATION CONTAINED HEREIN WILL NOT BE COPIED, REPRODUCED, DISPLAYED OR PASSED ON TO A THIRD PARTY WITHOUT POWERON CONTROL SYSTEM LTD'S WRITTEN CONSENT.

PROJECT:
H2FLOW
EUREKA STP CONTAINERIZED MBBR

TITLE:
3-PHASE POWER DISTRIBUTION
SLUDGE PUMP A

DESIGNED BY: P. CHAM	DATE: 2022-04-18
CHECKED BY: P. CHAM	DWG #: 109
PROJ #: 2633	SHEET: 109

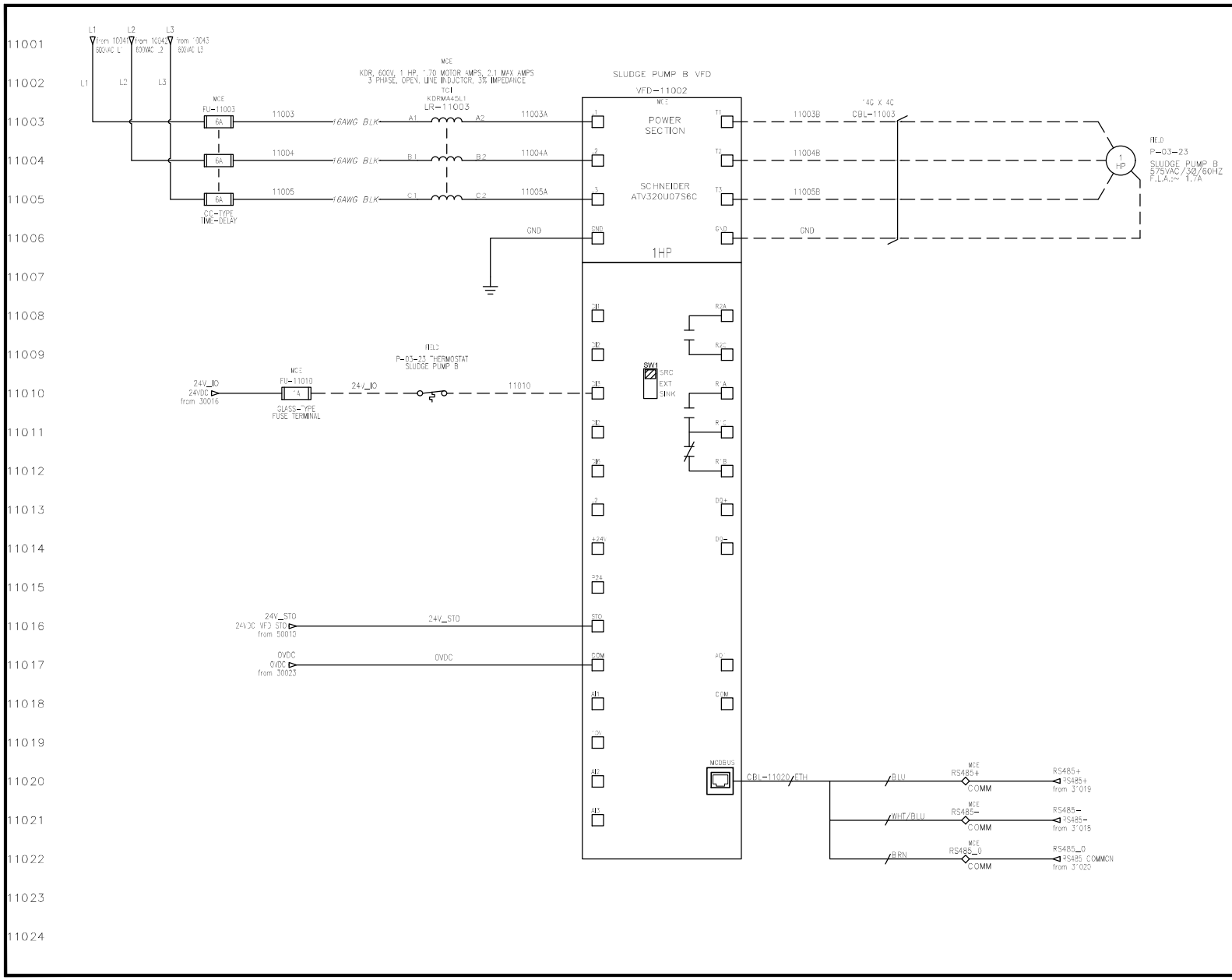

DRAWING REVISION TABLE

DATE	REV	DESCRIPTION	BY
2023-10-26	D2	SCREEN ROOM SRs	
2024-08-20	D8	REDLINES	MI
2025-08-06	D9	UPDATE kA RATING	DM
2025-11-25	D10	CUSTOMER REDLINES	MI

PROJECT REVISION:

D10 - AS INSTALLED
2025-11-25

NOTES:

Poweron CONTROL SYSTEMS LTD.

THIS DRAWING IS PROPERTY OF POWERON CONTROL SYSTEM LTD. THIS DRAWING IS TO BE USED ONLY FOR THE PURPOSE FOR WHICH IT IS INTENDED. IN ACCEPTING THIS DRAWING, YOU AGREE THAT THE INFORMATION CONTAINED HEREIN WILL NOT BE COPIED, REPRODUCED, DISPLAYED OR PASSED ON TO A THIRD PARTY WITHOUT POWERON CONTROL SYSTEM LTD'S WRITTEN CONSENT.

PROJECT:
H2FLOW
EUREKA STP CONTAINERIZED MBBR

TITLE:
3-PHASE POWER DISTRIBUTION
SLUDGE PUMP B

DESIGNED BY: P. CHAM	DATE: 2022-04-18
CHECKED BY: P. CHAM	DWG #: 110
PROJ #: 2633	SHEET: 110

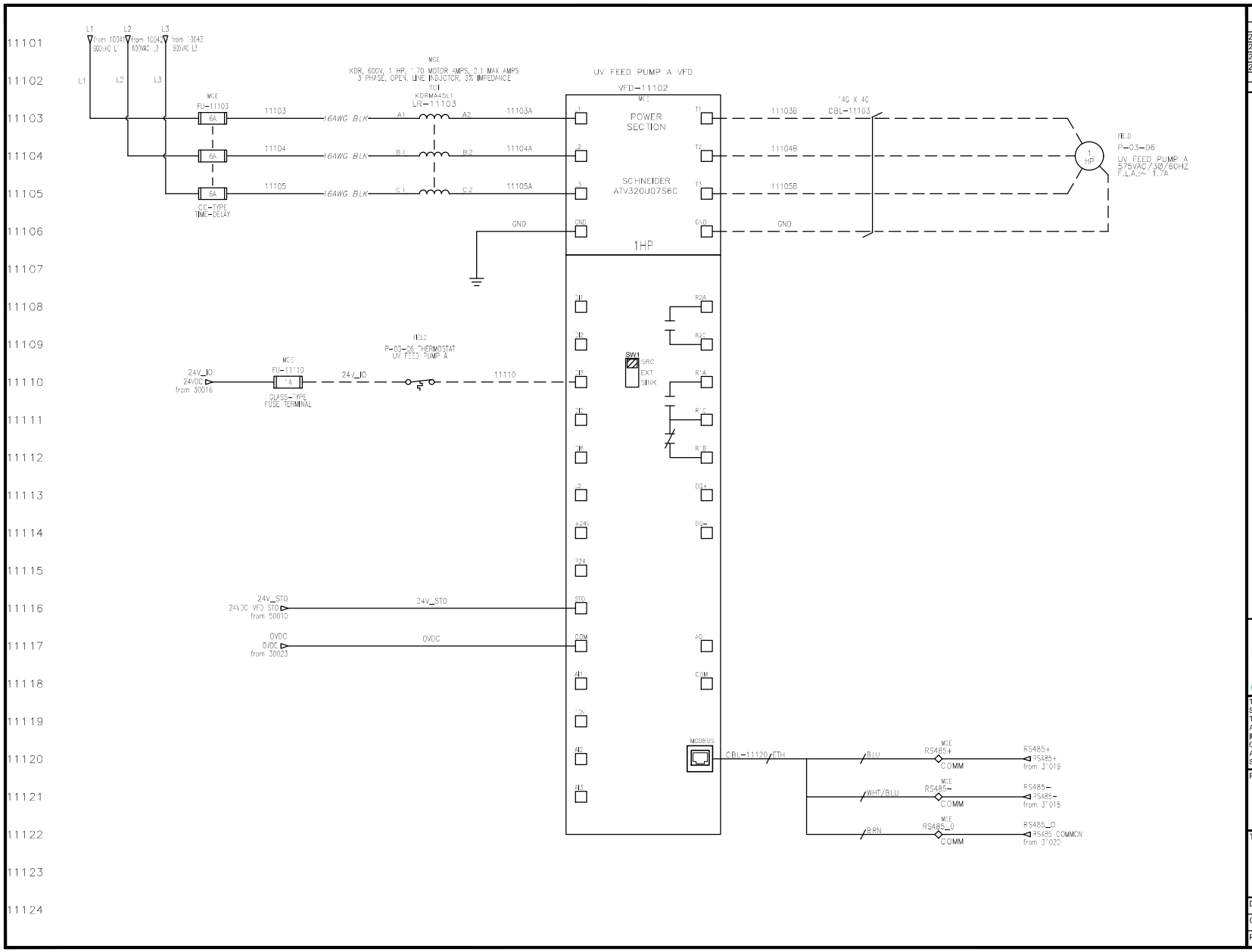

DRAWING REVISION TABLE

DATE	REV	DESCRIPTION	BY
2023-10-26	D2	SCREEN ROOM SRs	
2024-08-20	D8	REDLINES	MI
2025-08-06	D9	UPDATE kA RATING	DM
2025-11-25	D10	CUSTOMER REDLINES	MI

PROJECT REVISION:

D10 - AS INSTALLED
2025-11-25

NOTES:

Poweron CONTROL SYSTEMS LTD.

THIS DRAWING IS PROPERTY OF POWERON CONTROL SYSTEM LTD. THIS DRAWING IS TO BE USED ONLY FOR THE PURPOSE FOR WHICH IT IS INTENDED. IN ACCEPTING THIS DRAWING, YOU AGREE THAT THE INFORMATION CONTAINED HEREIN WILL NOT BE COPIED, REPRODUCED, DISPLAYED OR PASSED ON TO A THIRD PARTY WITHOUT POWERON CONTROL SYSTEM LTD'S WRITTEN CONSENT.

PROJECT:
H2FLOW
EUREKA STP CONTAINERIZED MBBR

TITLE:
3-PHASE POWER DISTRIBUTION
UV FEED PUMP A

DESIGNED BY: P. CHAM	DATE: 2022-04-18
CHECKED BY: P. CHAM	DWG #: 111
PROJ #: 2633	SHEET: 111

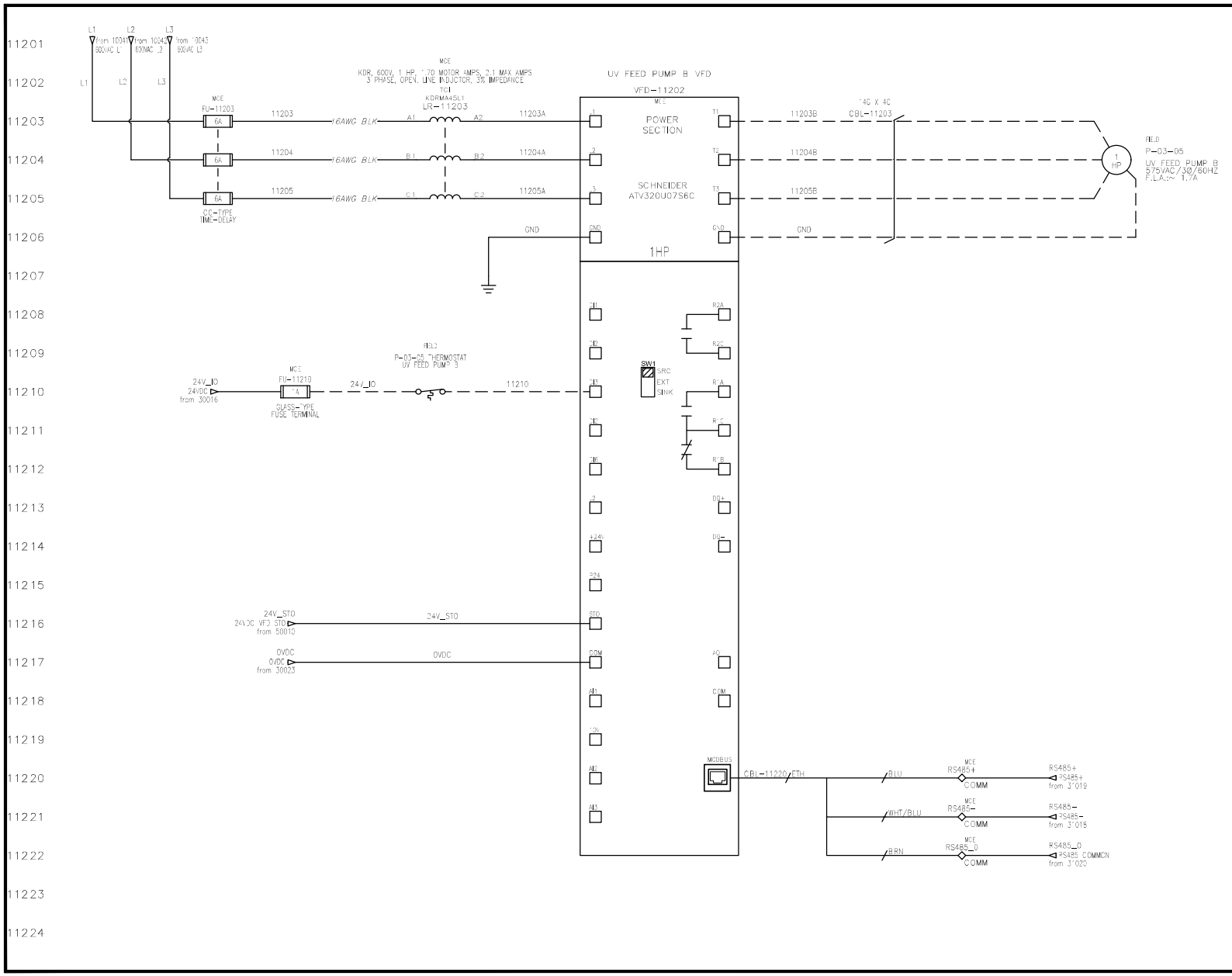

DRAWING REVISION TABLE

DATE	REV	DESCRIPTION	BY
2023-10-26	D2	SCREEN ROOM SRs	
2024-08-20	D8	REDLINES	MI
2025-08-06	D9	UPDATE kA RATING	DM
2025-11-25	D10	CUSTOMER REDLINES	MI

PROJECT REVISION:

D10 - AS INSTALLED
2025-11-25

NOTES:

Poweron CONTROL SYSTEMS LTD.

THIS DRAWING IS PROPERTY OF POWERON CONTROL SYSTEM LTD. THIS DRAWING IS TO BE USED ONLY FOR THE PURPOSE FOR WHICH IT IS INTENDED. IN ACCEPTING THIS DRAWING, YOU AGREE THAT THE INFORMATION CONTAINED HEREIN WILL NOT BE COPIED, REPRODUCED, DISPLAYED OR PASSED ON TO A THIRD PARTY WITHOUT POWERON CONTROL SYSTEM LTD'S WRITTEN CONSENT.

PROJECT:
H2FLOW
EUREKA STP CONTAINERIZED MBBR

TITLE:
3-PHASE POWER DISTRIBUTION
UV FEED PUMP B

DESIGNED BY: P. CHAM	DATE: 2022-04-18
CHECKED BY: P. CHAM	DWG #: 112
PROJ #: 2633	SHEET: 112

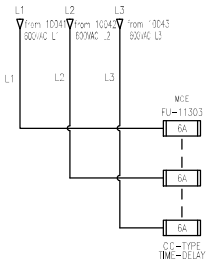

11301
11302
11303
11304
11305
11306
11307
11308
11309
11310
11311
11312
11313
11314
11315
11316
11317
11318
11319
11320
11321
11322
11323
11324

DRAWING REVISION TABLE

DATE	REV	DESCRIPTION	BY
2023-10-26	D2	SCREEN ROOM SRs	
2024-08-20	D8	REDLINES	MI
2025-08-06	D9	UPDATE kA RATING	DM
2025-11-25	D10	CUSTOMER REDLINES	MI

PROJECT REVISION:

D10 - AS INSTALLED
2025-11-25

NOTES:

Poweron CONTROL SYSTEMS LTD.

THIS DRAWING IS PROPERTY OF POWERON CONTROL SYSTEM LTD. THIS DRAWING IS TO BE USED ONLY FOR THE PURPOSE FOR WHICH IT IS INTENDED. IN ACCEPTING THIS DRAWING, YOU AGREE THAT THE INFORMATION CONTAINED HEREIN WILL NOT BE COPIED, REPRODUCED, DISPLAYED OR PASSED ON TO A THIRD PARTY WITHOUT POWERON CONTROL SYSTEM LTD'S WRITTEN CONSENT.

PROJECT:
H2FLOW
EUREKA STP CONTAINERIZED MBBR

TITLE:
3-PHASE POWER DISTRIBUTION
SPARE

DESIGNED BY: P. CHAM	DATE: 2022-04-18
CHECKED BY: P. CHAM	DWG #: 113
PROJ #: 2633	SHEET: 113

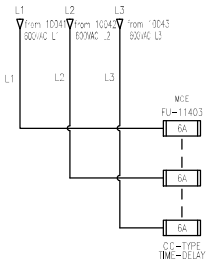

11401
11402
11403
11404
11405
11406
11407
11408
11409
11410
11411
11412
11413
11414
11415
11416
11417
11418
11419
11420
11421
11422
11423
11424

DRAWING REVISION TABLE

DATE	REV	DESCRIPTION	BY
2023-10-26	D2	SCREEN ROOM SRs	
2024-08-20	D8	REDLINES	MI
2025-08-06	D9	UPDATE kA RATING	DM
2025-11-25	D10	CUSTOMER REDLINES	MI

PROJECT REVISION:

D10 - AS INSTALLED
2025-11-25

NOTES:

Poweron CONTROL SYSTEMS LTD.

THIS DRAWING IS PROPERTY OF POWERON CONTROL SYSTEM LTD. THIS DRAWING IS TO BE USED ONLY FOR THE PURPOSE FOR WHICH IT IS INTENDED. IN ACCEPTING THIS DRAWING, YOU AGREE THAT THE INFORMATION CONTAINED HEREIN WILL NOT BE COPIED, REPRODUCED, DISPLAYED OR PASSED ON TO A THIRD PARTY WITHOUT POWERON CONTROL SYSTEM LTD'S WRITTEN CONSENT.

PROJECT:
H2FLOW
EUREKA STP CONTAINERIZED MBBR

TITLE:
3-PHASE POWER DISTRIBUTION
SPARE

DESIGNED BY: P. CHAM	DATE: 2022-04-18
CHECKED BY: P. CHAM	DWG #: 114
PROJ #: 2633	SHEET: 114

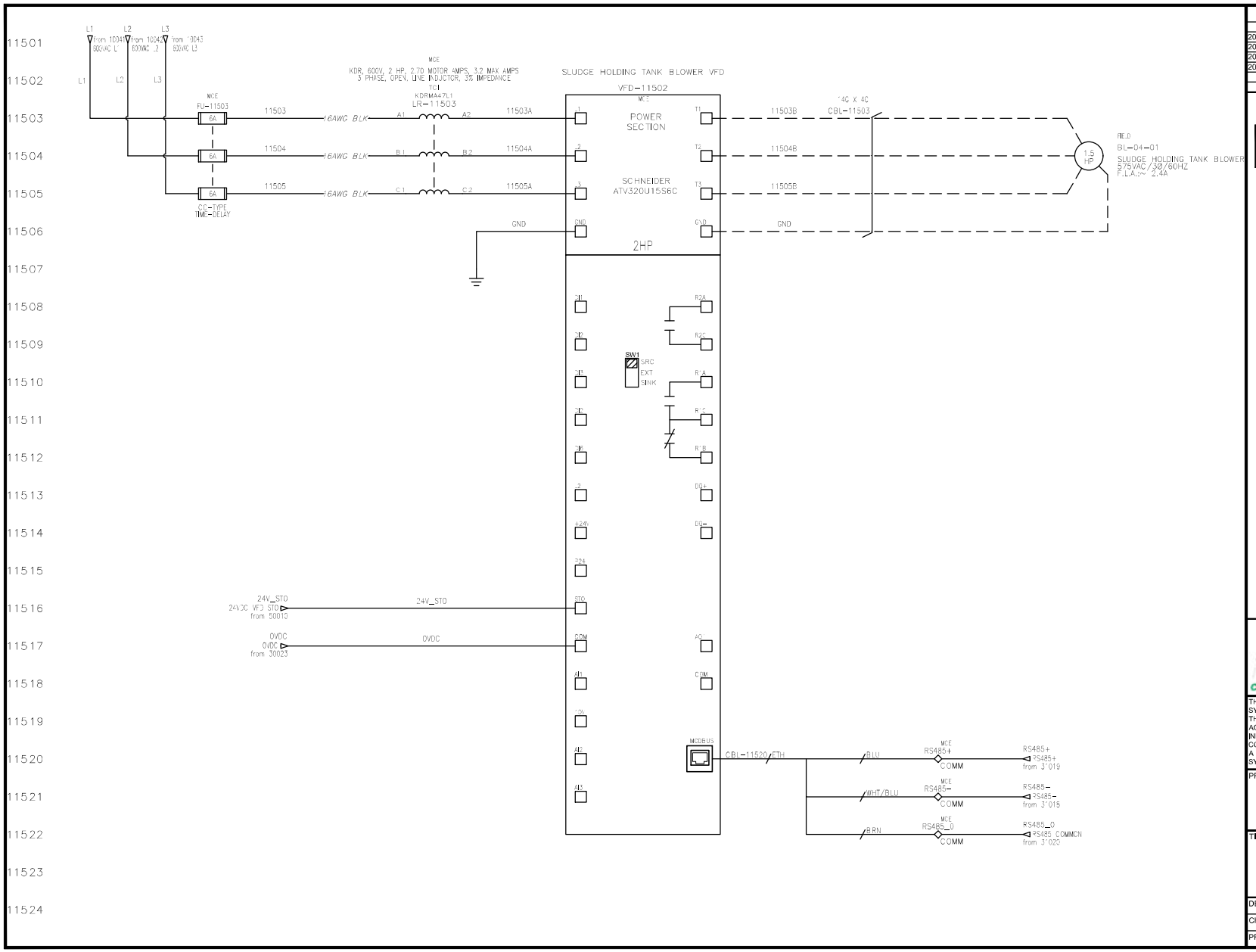

DRAWING REVISION TABLE

DATE	REV	DESCRIPTION	BY
2023-10-26	D2	SCREEN ROOM SRs	
2024-08-20	D8	REDLINES	MI
2025-08-06	D9	UPDATE kA RATING	DM
2025-11-25	D10	CUSTOMER REDLINES	MI

PROJECT REVISION:

D10 - AS INSTALLED
2025-11-25

NOTES:

Poweron CONTROL SYSTEMS LTD.

THIS DRAWING IS PROPERTY OF POWERON CONTROL SYSTEM LTD. THIS DRAWING IS TO BE USED ONLY FOR THE PURPOSE FOR WHICH IT IS INTENDED. IN ACCEPTING THIS DRAWING, YOU AGREE THAT THE INFORMATION CONTAINED HEREIN WILL NOT BE COPIED, REPRODUCED, DISPLAYED OR PASSED ON TO A THIRD PARTY WITHOUT POWERON CONTROL SYSTEM LTD'S WRITTEN CONSENT.

PROJECT:
H2FLOW
EUREKA STP CONTAINERIZED MBBR

TITLE:
3-PHASE POWER DISTRIBUTION
SLUDGE HOLDING TANK BLOWER

DESIGNED BY: P. CHAM	DATE: 2022-04-18
CHECKED BY: P. CHAM	DWG #: 115
PROJ #: 2633	SHEET: 115

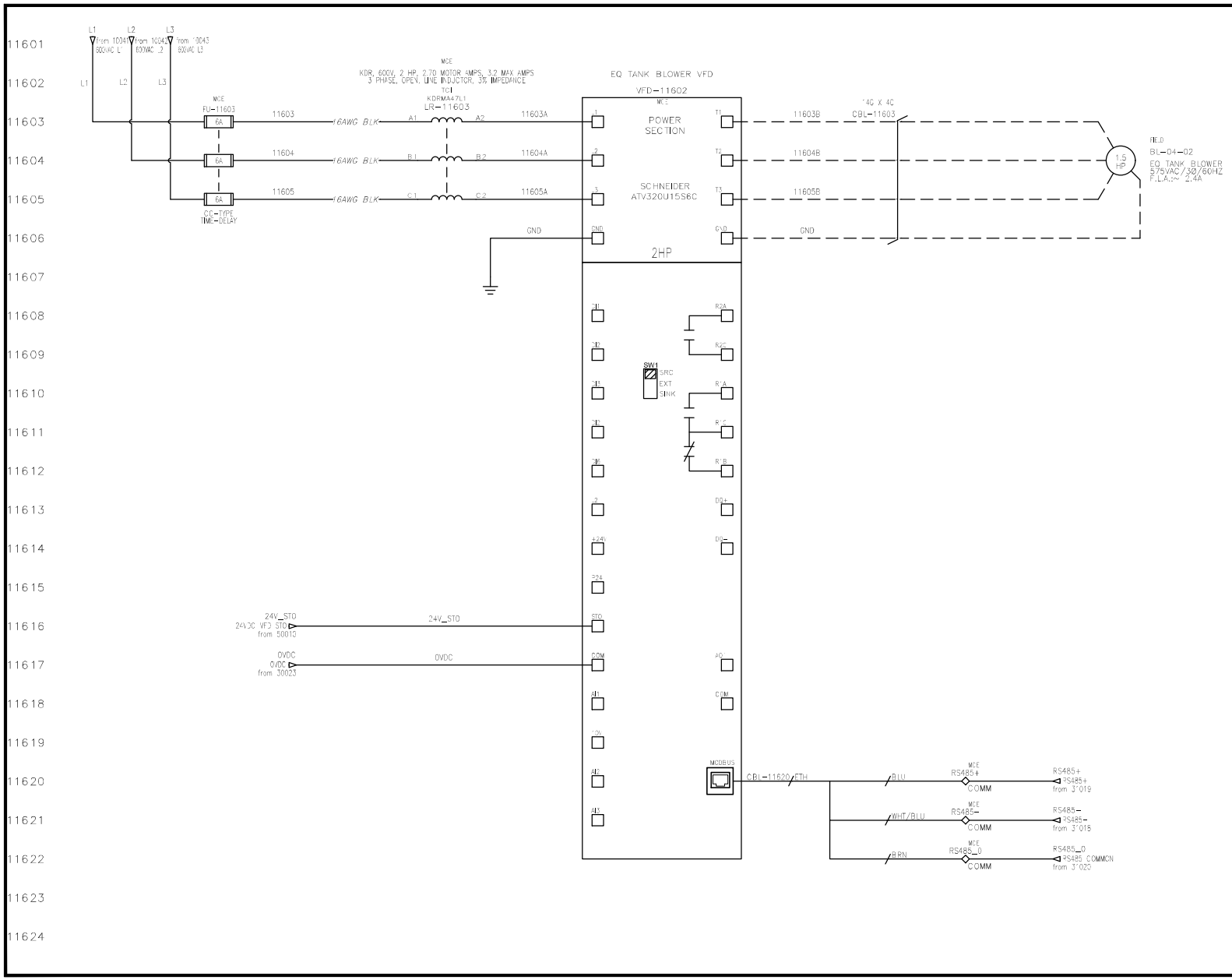

DRAWING REVISION TABLE

DATE	REV	DESCRIPTION	BY
2023-10-26	D2	SCREEN ROOM SRs	
2024-08-20	D8	REDLINES	MI
2025-08-06	D9	UPDATE kA RATING	DM
2025-11-25	D10	CUSTOMER REDLINES	MI

PROJECT REVISION:

D10 - AS INSTALLED
2025-11-25

NOTES:

Poweron CONTROL SYSTEMS LTD.

THIS DRAWING IS PROPERTY OF POWERON CONTROL SYSTEM LTD. THIS DRAWING IS TO BE USED ONLY FOR THE PURPOSE FOR WHICH IT IS INTENDED. IN ACCEPTING THIS DRAWING, YOU AGREE THAT THE INFORMATION CONTAINED HEREIN WILL NOT BE COPIED, REPRODUCED, DISPLAYED OR PASSED ON TO A THIRD PARTY WITHOUT POWERON CONTROL SYSTEM LTD'S WRITTEN CONSENT.

PROJECT:
H2FLOW
EUREKA STP CONTAINERIZED MBBR

TITLE:
3-PHASE POWER DISTRIBUTION
EQ TANK BLOWER

DESIGNED BY: P. CHAM	DATE: 2022-04-18
CHECKED BY: P. CHAM	DWG #: 116
PROJ #: 2633	SHEET: 116

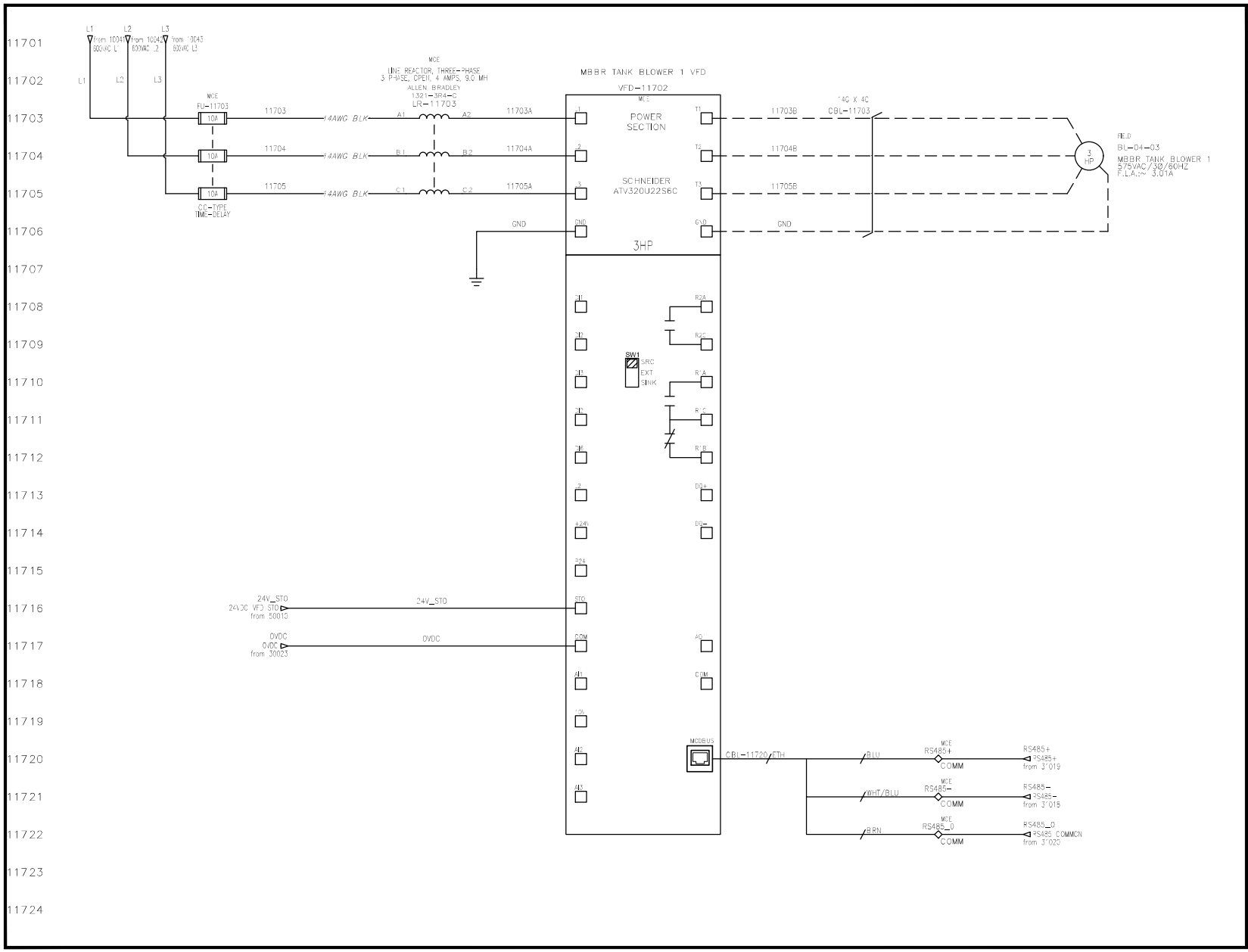

DRAWING REVISION TABLE

DATE	REV	DESCRIPTION	BY
2023-10-26	D2	SCREEN ROOM SRs	
2024-08-20	D8	REDLINES	MI
2025-08-06	D9	UPDATE kA RATING	DM
2025-11-25	D10	CUSTOMER REDLINES	MI

PROJECT REVISION:

D10 - AS INSTALLED
2025-11-25

NOTES:

Poweron CONTROL SYSTEMS LTD.

THIS DRAWING IS PROPERTY OF POWERON CONTROL SYSTEM LTD. THIS DRAWING IS TO BE USED ONLY FOR THE PURPOSE FOR WHICH IT IS INTENDED. IN ACCEPTING THIS DRAWING, YOU AGREE THAT THE INFORMATION CONTAINED HEREIN WILL NOT BE COPIED, REPRODUCED, DISPLAYED OR PASSED ON TO A THIRD PARTY WITHOUT POWERON CONTROL SYSTEM LTD'S WRITTEN CONSENT.

PROJECT:
H2FLOW
EUREKA STP CONTAINERIZED MBBR

TITLE:
3-PHASE POWER DISTRIBUTION
MBBR TANK BLOWER 1

DESIGNED BY: P. CHAM	DATE: 2022-04-18
CHECKED BY: P. CHAM	DWG #: 117
PROJ #: 2633	SHEET: 117

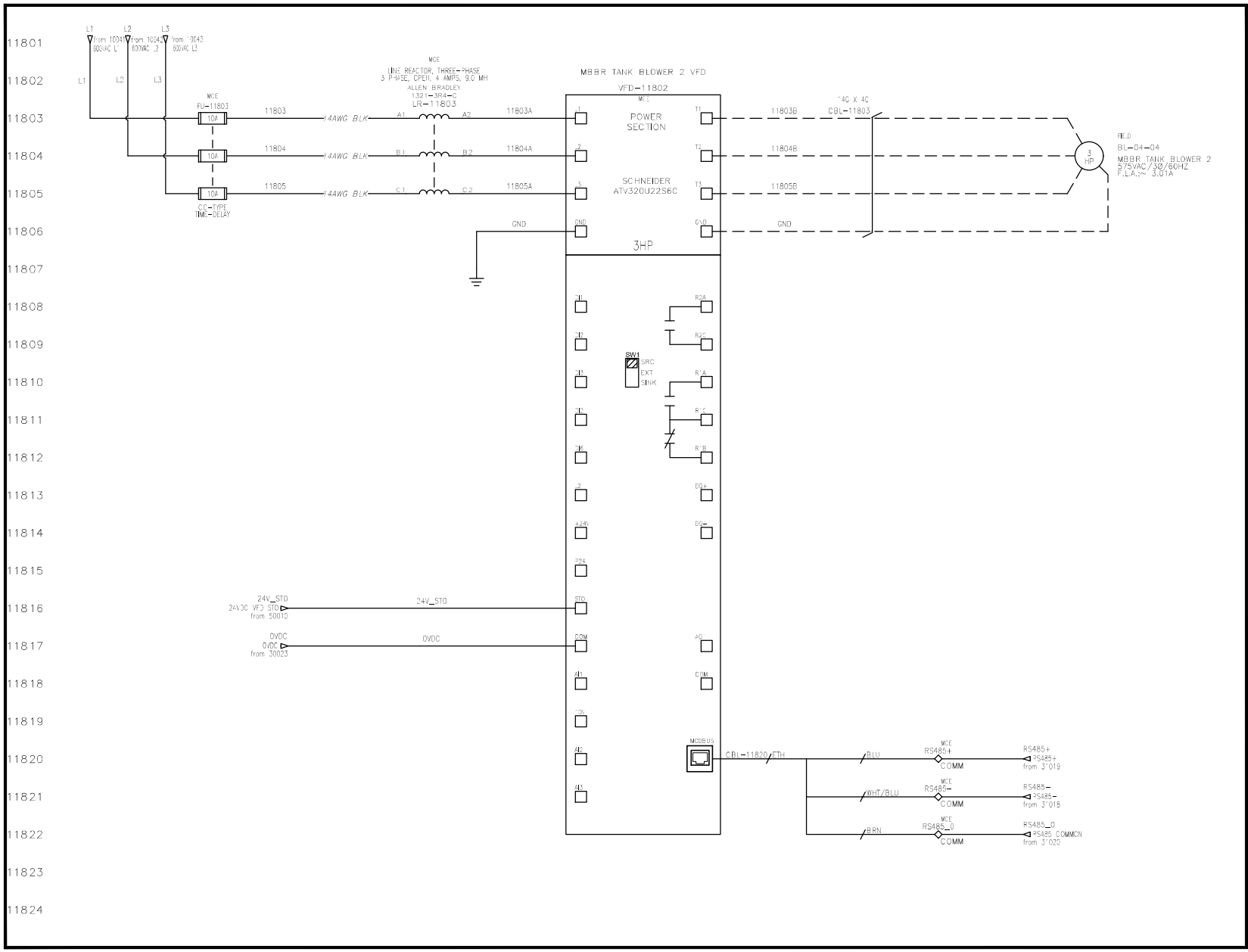

DRAWING REVISION TABLE

DATE	REV	DESCRIPTION	BY
2023-10-26	D2	SCREEN ROOM SRs	
2024-08-20	D8	REDLINES	MI
2025-08-06	D9	UPDATE kA RATING	DM
2025-11-25	D10	CUSTOMER REDLINES	MI

PROJECT REVISION:

D10 - AS INSTALLED
2025-11-25

NOTES:

Poweron CONTROL SYSTEMS LTD.

THIS DRAWING IS PROPERTY OF POWERON CONTROL SYSTEM LTD. THIS DRAWING IS TO BE USED ONLY FOR THE PURPOSE FOR WHICH IT IS INTENDED. IN ACCEPTING THIS DRAWING, YOU AGREE THAT THE INFORMATION CONTAINED HEREIN WILL NOT BE COPIED, REPRODUCED, DISPLAYED OR PASSED ON TO A THIRD PARTY WITHOUT POWERON CONTROL SYSTEM LTD'S WRITTEN CONSENT.

PROJECT:
H2FLOW
EUREKA STP CONTAINERIZED MBBR

TITLE:
3-PHASE POWER DISTRIBUTION
MBBR TANK BLOWER 2

DESIGNED BY: P. CHAM	DATE: 2022-04-18
CHECKED BY: P. CHAM	DWG #: 118
PROJ #: 2633	SHEET: 118

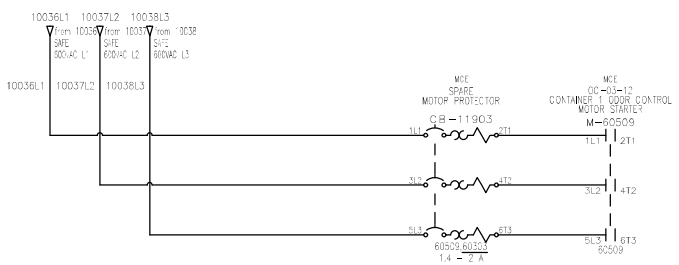

11901
11902
11903
11904
11905
11906
11907
11908
11909
11910
11911
11912
11913
11914
11915
11916
11917
11918
11919
11920
11921
11922
11923
11924

DRAWING REVISION TABLE

DATE	REV	DESCRIPTION	BY
2023-10-26	D2	SCREEN ROOM SRs	
2024-08-20	D8	REDLINES	MI
2025-08-06	D9	UPDATE kA RATING	DM
2025-11-25	D10	CUSTOMER REDLINES	MI

PROJECT REVISION:

D10 - AS INSTALLED

2025-11-25

NOTES:

Poweron CONTROL SYSTEMS LTD.

THIS DRAWING IS PROPERTY OF POWERON CONTROL SYSTEM LTD. THIS DRAWING IS TO BE USED ONLY FOR THE PURPOSE FOR WHICH IT IS INTENDED. IN ACCEPTING THIS DRAWING, YOU AGREE THAT THE INFORMATION CONTAINED HEREIN WILL NOT BE COPIED, REPRODUCED, DISPLAYED OR PASSED ON TO A THIRD PARTY WITHOUT POWERON CONTROL SYSTEM LTD'S WRITTEN CONSENT.

PROJECT:

H2FLOW

EUREKA STP CONTAINERIZED MBBR

TITLE:

3-PHASE POWER DISTRIBUTION
CONTAINER 1 ODOR CONTROL

DESIGNED BY: P. CHAM	DATE: 2022-04-18
CHECKED BY: P. CHAM	DWG #: 119
PROJ #: 2633	SHEET: 119

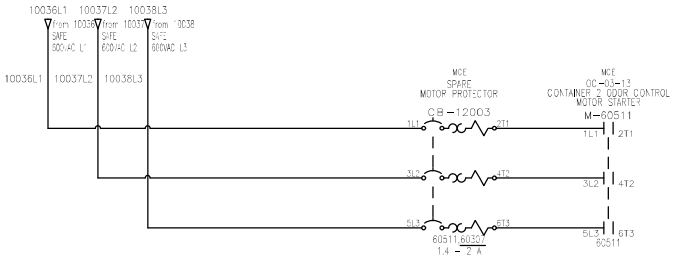

12001
12002
12003
12004
12005
12006
12007
12008
12009
12010
12011
12012
12013
12014
12015
12016
12017
12018
12019
12020
12021
12022
12023
12024

DRAWING REVISION TABLE

DATE	REV	DESCRIPTION	BY
2023-10-26	D2	SCREEN ROOM SRs	
2024-08-20	D8	REDLINES	MI
2025-08-06	D9	UPDATE kA RATING	DM
2025-11-25	D10	CUSTOMER REDLINES	MI

PROJECT REVISION:

D10 - AS INSTALLED

2025-11-25

NOTES:

THIS DRAWING IS PROPERTY OF POWERON CONTROL SYSTEM LTD. THIS DRAWING IS TO BE USED ONLY FOR THE PURPOSE FOR WHICH IT IS INTENDED. IN ACCEPTING THIS DRAWING, YOU AGREE THAT THE INFORMATION CONTAINED HEREIN WILL NOT BE COPIED, REPRODUCED, DISPLAYED OR PASSED ON TO A THIRD PARTY WITHOUT POWERON CONTROL SYSTEM LTD'S WRITTEN CONSENT.

PROJECT:

H2FLOW

EUREKA STP CONTAINERIZED MBBR

TITLE:

3-PHASE POWER DISTRIBUTION
CONTAINER 2 ODOR CONTROL

DESIGNED BY:	P. CHAM	DATE:	2022-04-18
CHECKED BY:	P. CHAM	DWG #:	120
PROJ #:	2633	SHEET:	120

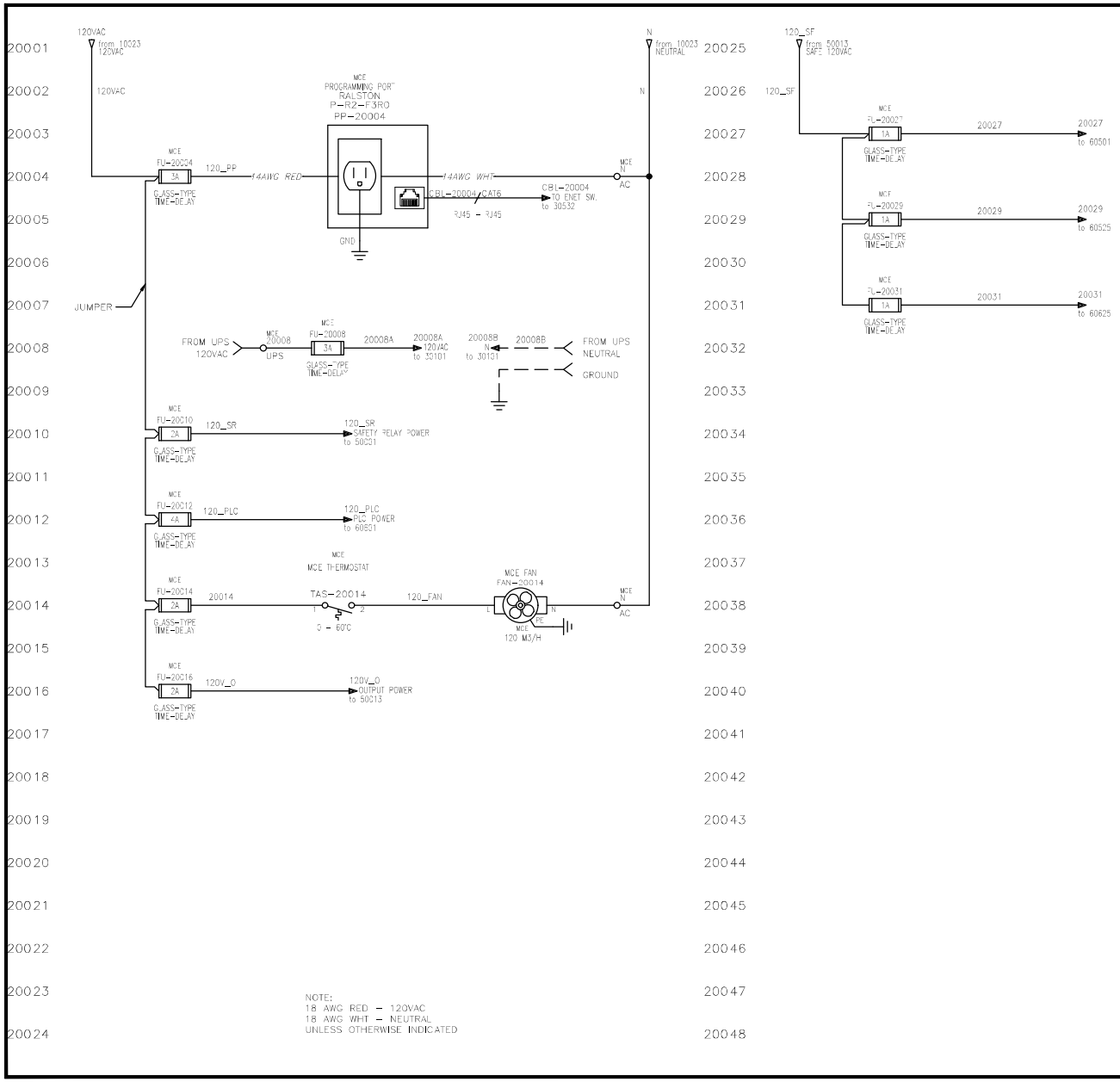

DRAWING REVISION TABLE

DATE	REV	DESCRIPTION	BY
2023-10-26	D2	SCREEN ROOM SRs	
2024-08-20	D8	REDLINES	MI
2025-08-06	D9	UPDATE kA RATING	DM
2025-11-25	D10	CUSTOMER REDLINES	MI

PROJECT REVISION:

D10 - AS INSTALLED
2025-11-25

NOTES:

Poweron CONTROL SYSTEMS LTD.

THIS DRAWING IS PROPERTY OF POWERON CONTROL SYSTEM LTD. THIS DRAWING IS TO BE USED ONLY FOR THE PURPOSE FOR WHICH IT IS INTENDED. IN ACCEPTING THIS DRAWING, YOU AGREE THAT THE INFORMATION CONTAINED HEREIN WILL NOT BE COPIED, REPRODUCED, DISPLAYED OR PASSED ON TO A THIRD PARTY WITHOUT POWERON CONTROL SYSTEM LTD'S WRITTEN CONSENT.

PROJECT:
H2FLOW
EUREKA STP CONTAINERIZED MBBR

TITLE:
1-PHASE POWER DISTRIBUTION
120VAC POWER

DESIGNED BY: P. CHAM	DATE: 2022-04-18
CHECKED BY: P. CHAM	DWG #: 200
PROJ #: 2633	SHEET: 200

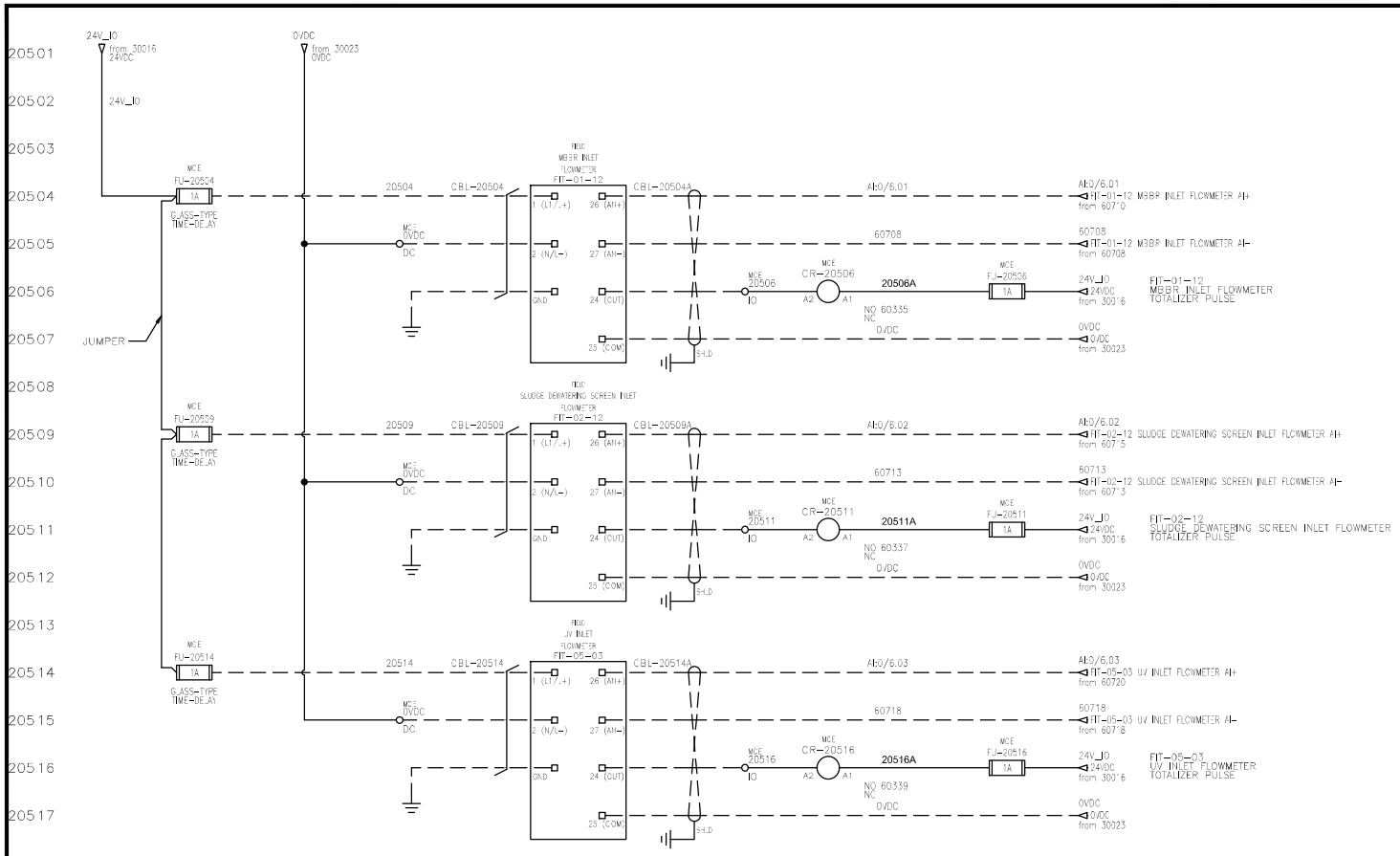

NOTE:
18 AWG RED – 120VAC
18 AWG WHT – NEUTRAL
UNLESS OTHERWISE INDICATED

DRAWING REVISION TABLE

DATE	REV	DESCRIPTION	BY
2023-10-26	D2	SCREEN ROOM SRs	
2024-08-20	D8	REDLINES	MI
2025-08-06	D9	UPDATE kA RATING	DM
2025-11-25	D10	CUSTOMER REDLINES	MI

PROJECT REVISION:

D10 - AS INSTALLED
2025-11-25

NOTES:

FLOW METER SOLID STATE RELAYS MAX SWITCHING FREQUENCY 500Hz, WITH RESPONSE TIME OF 0.35 MS FOR TURN-ON AND 0.08 MS FOR TURN-OFF.

Poweron CONTROL SYSTEMS LTD.

THIS DRAWING IS PROPERTY OF POWERON CONTROL SYSTEM LTD. THIS DRAWING IS TO BE USED ONLY FOR THE PURPOSE FOR WHICH IT IS INTENDED. IN ACCEPTING THIS DRAWING, YOU AGREE THAT THE INFORMATION CONTAINED HEREIN WILL NOT BE COPIED, REPRODUCED, DISPLAYED OR PASSED ON TO A THIRD PARTY WITHOUT POWERON CONTROL SYSTEM LTD'S WRITTEN CONSENT.

PROJECT:
H2FLOW
EUREKA STP CONTAINERIZED MBBR

TITLE:
1-PHASE POWER DISTRIBUTION
120VAC POWER

DESIGNED BY: P. CHAM	DATE: 2022-04-18
CHECKED BY: P. CHAM	DWG #: 205
PROJ #: 2633	SHEET: 205

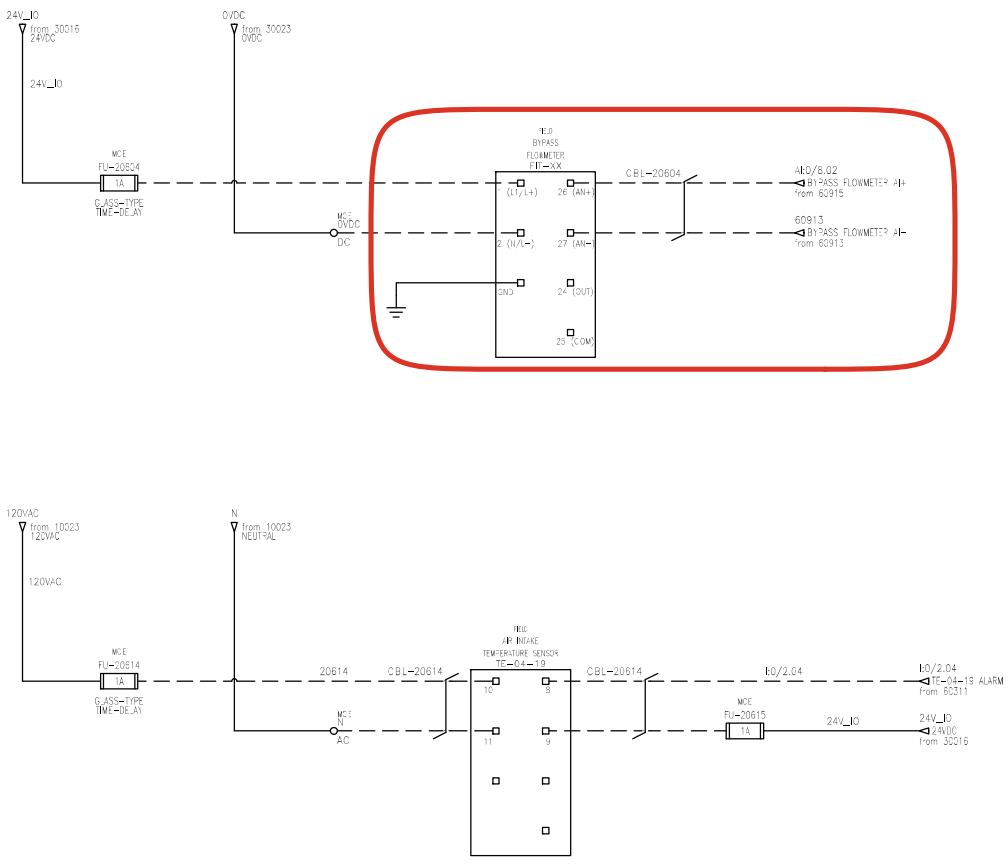

NOTE:
18 AWG RED – 120VAC
18 AWG WHT – NEUTRAL
UNLESS OTHERWISE INDICATED

DRAWING REVISION TABLE

DATE	REV	DESCRIPTION	BY
2023-10-26	D2	SCREEN ROOM SRs	
2024-08-20	D8	REDLINES	MI
2025-08-06	D9	UPDATE kA RATING	DM
2025-11-25	D10	CUSTOMER REDLINES	MI

PROJECT REVISION:

D10 - AS INSTALLED
2025-11-25

NOTES:

THIS DRAWING IS PROPERTY OF POWERON CONTROL SYSTEM LTD. THIS DRAWING IS TO BE USED ONLY FOR THE PURPOSE FOR WHICH IT IS INTENDED. IN ACCEPTING THIS DRAWING, YOU AGREE THAT THE INFORMATION CONTAINED HEREIN WILL NOT BE COPIED, REPRODUCED, DISPLAYED OR PASSED ON TO A THIRD PARTY WITHOUT POWERON CONTROL SYSTEM LTD'S WRITTEN CONSENT.

PROJECT:
H2FLOW
EUREKA STP CONTAINERIZED MBBR

TITLE:
1-PHASE POWER DISTRIBUTION
120VAC POWER

DESIGNED BY: P. CHAM	DATE: 2022-04-18
CHECKED BY: P. CHAM	DWG #: 206
PROJ #: 2633	SHEET: 206

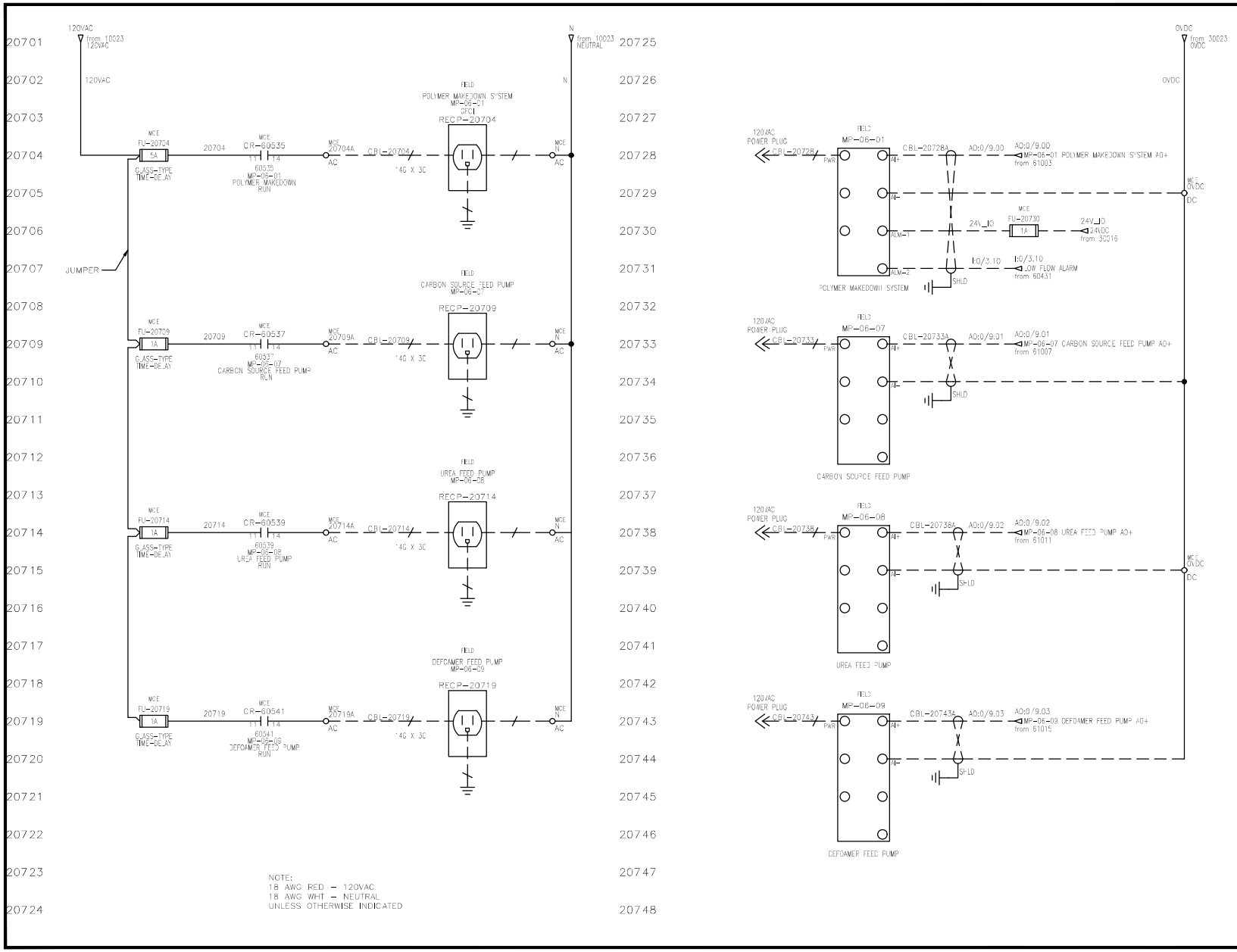

DRAWING REVISION TABLE

DATE	REV	DESCRIPTION	BY
2023-10-26	D2	SCREEN ROOM SRs	
2024-08-20	D8	REDLINES	MI
2025-08-06	D9	UPDATE kA RATING	DM
2025-11-25	D10	CUSTOMER REDLINES	MI

PROJECT REVISION:

D10 - AS INSTALLED
2025-11-25

NOTES:

THIS DRAWING IS PROPERTY OF POWERON CONTROL SYSTEM LTD. THIS DRAWING IS TO BE USED ONLY FOR THE PURPOSE FOR WHICH IT IS INTENDED. IN ACCEPTING THIS DRAWING, YOU AGREE THAT THE INFORMATION CONTAINED HEREIN WILL NOT BE COPIED, REPRODUCED, DISPLAYED OR PASSED ON TO A THIRD PARTY WITHOUT POWERON CONTROL SYSTEM LTD'S WRITTEN CONSENT.

PROJECT:
H2FLOW
EUREKA STP CONTAINERIZED MBBR

TITLE:
1-PHASE POWER DISTRIBUTION
120VAC POWER

DESIGNED BY: P. CHAM	DATE: 2022-04-18
CHECKED BY: P. CHAM	DWG #: 207
PROJ #: 2633	SHEET: 207

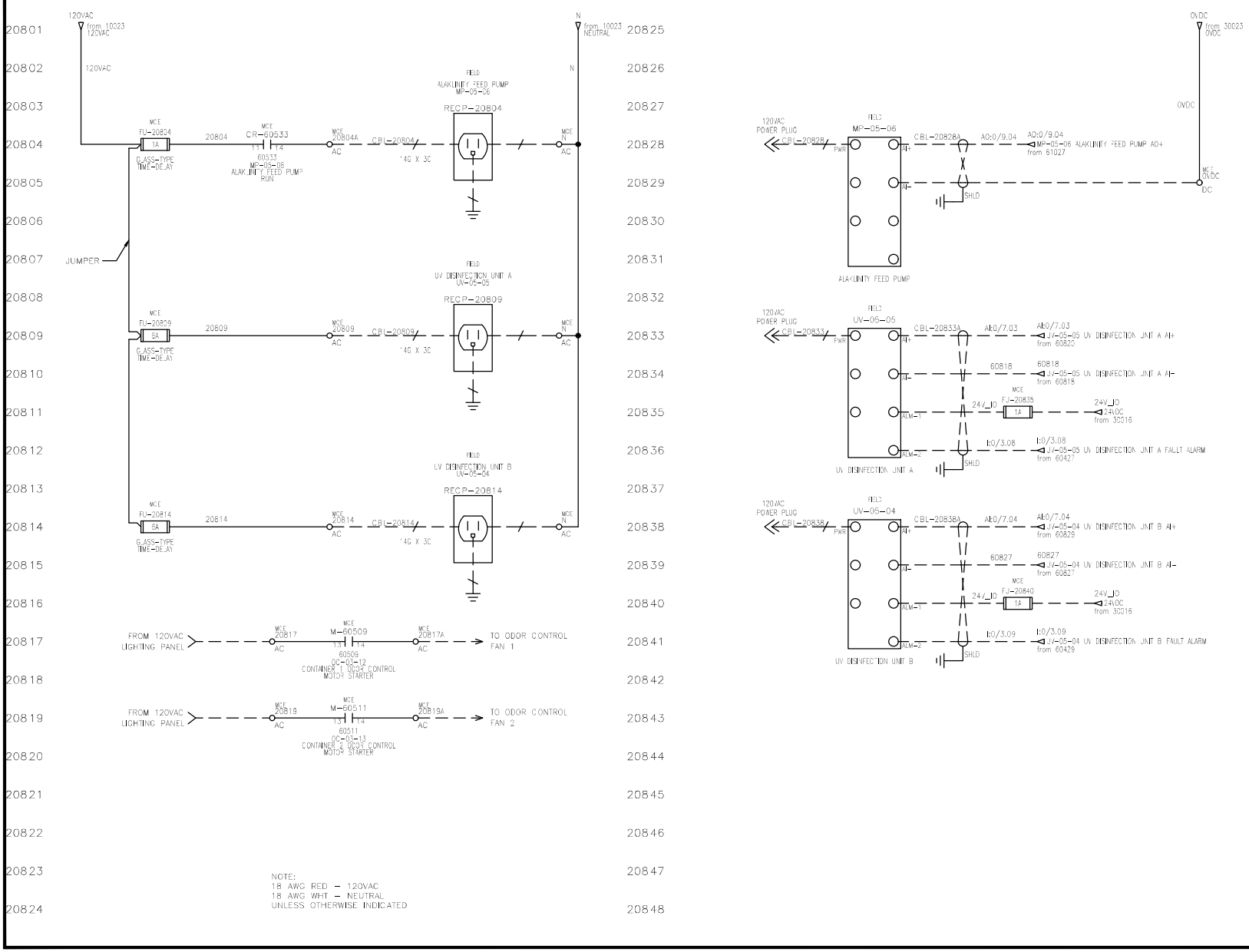

DRAWING REVISION TABLE

DATE	REV	DESCRIPTION	BY
2023-10-26	D2	SCREEN ROOM SRs	
2024-08-20	D8	REDLINES	MI
2025-08-06	D9	UPDATE kA RATING	DM
2025-11-25	D10	CUSTOMER REDLINES	MI

PROJECT REVISION:

D10 - AS INSTALLED
2025-11-25

NOTES:

THIS DRAWING IS PROPERTY OF POWERON CONTROL SYSTEM LTD. THIS DRAWING IS TO BE USED ONLY FOR THE PURPOSE FOR WHICH IT IS INTENDED. IN ACCEPTING THIS DRAWING, YOU AGREE THAT THE INFORMATION CONTAINED HEREIN WILL NOT BE COPIED, REPRODUCED, DISPLAYED OR PASSED ON TO A THIRD PARTY WITHOUT POWERON CONTROL SYSTEM LTD'S WRITTEN CONSENT.

PROJECT:
H2FLOW
EUREKA STP CONTAINERIZED MBBR

TITLE:
1-PHASE POWER DISTRIBUTION
120VAC POWER

DESIGNED BY: P. CHAM	DATE: 2022-04-18
CHECKED BY: P. CHAM	DWG #: 208
PROJ #: 2633	SHEET: 208

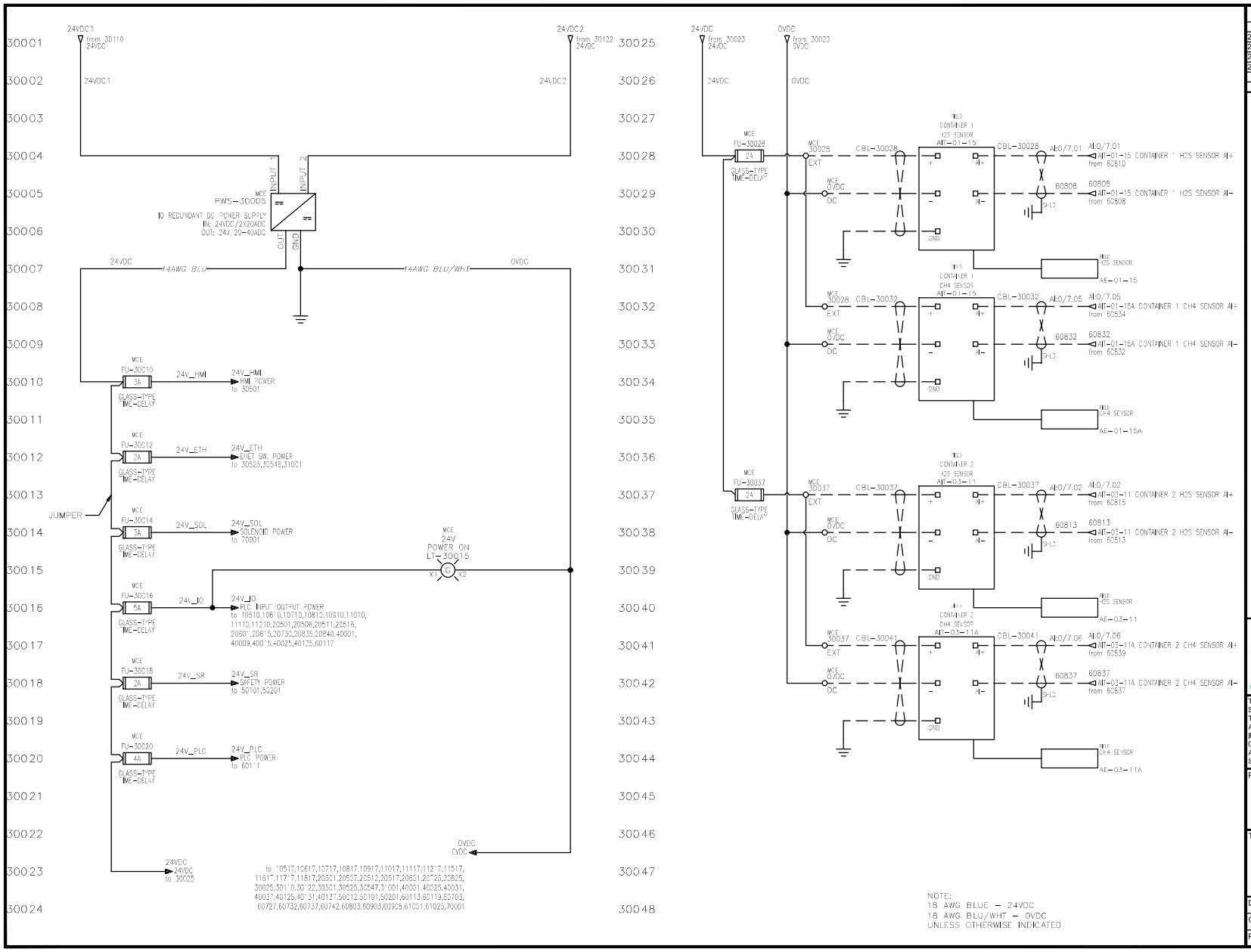

DRAWING REVISION TABLE

DATE	REV	DESCRIPTION	BY
2023-10-26	D2	SCREEN ROOM SRs	
2024-08-20	D8	REDLINES	MI
2025-08-06	D9	UPDATE kA RATING	DM
2025-11-25	D10	CUSTOMER REDLINES	MI

PROJECT REVISION:

D10 - AS INSTALLED
2025-11-25

NOTES:

THIS DRAWING IS PROPERTY OF POWERON CONTROL SYSTEM LTD. THIS DRAWING IS TO BE USED ONLY FOR THE PURPOSE FOR WHICH IT IS INTENDED. IN ACCEPTING THIS DRAWING, YOU AGREE THAT THE INFORMATION CONTAINED HEREIN WILL NOT BE COPIED, REPRODUCED, DISPLAYED OR PASSED ON TO A THIRD PARTY WITHOUT POWERON CONTROL SYSTEM LTD'S WRITTEN CONSENT.

PROJECT:
H2FLOW
EUREKA STP CONTAINERIZED MBBR

TITLE:
1-PHASE POWER DISTRIBUTION
24VDC POWER

DESIGNED BY: P. CHAM		DATE:	2022-04-18
CHECKED BY: P. CHAM		DWG #:	300
PROJ #:	2633	SHEET:	300

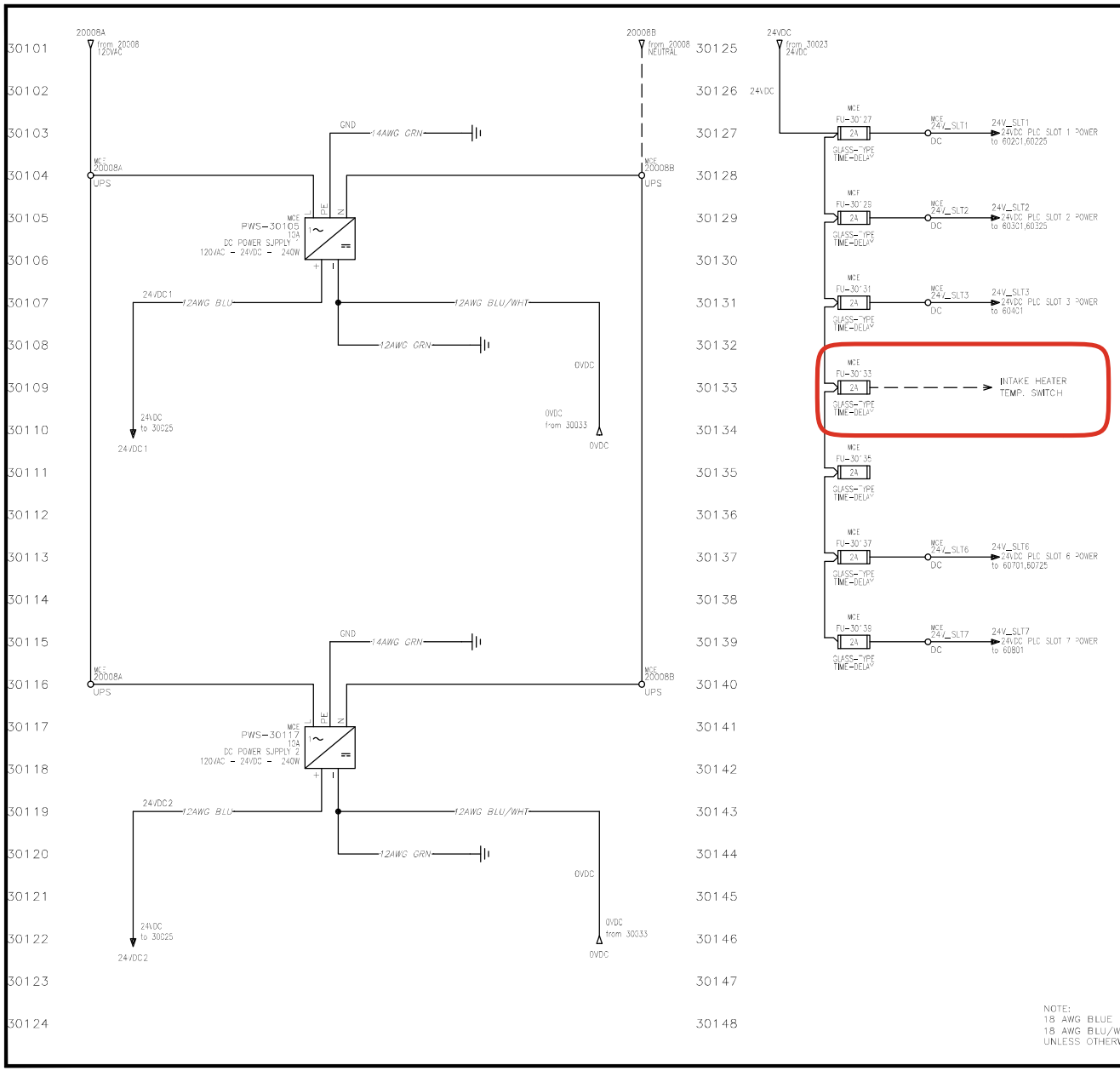

NOTE:
18 AWG BLUE - 24VDC
18 AWG BLU/WHT - 0VDC
UNLESS OTHERWISE INDICATED

DRAWING REVISION TABLE

DATE	REV	DESCRIPTION	BY
2023-10-26	D2	SCREEN ROOM SRs	
2024-08-20	D8	REDLINES	MI
2025-08-06	D9	UPDATE kA RATING	DM
2025-11-25	D10	CUSTOMER REDLINES	MI

PROJECT REVISION:

D10 - AS INSTALLED
2025-11-25

NOTES:

Poweron CONTROL SYSTEMS LTD.

THIS DRAWING IS PROPERTY OF POWERON CONTROL SYSTEM LTD. THIS DRAWING IS TO BE USED ONLY FOR THE PURPOSE FOR WHICH IT IS INTENDED. IN ACCEPTING THIS DRAWING, YOU AGREE THAT THE INFORMATION CONTAINED HEREIN WILL NOT BE COPIED, REPRODUCED, DISPLAYED OR PASSED ON TO A THIRD PARTY WITHOUT POWERON CONTROL SYSTEM LTD'S WRITTEN CONSENT.

PROJECT:
H2FLOW
EUREKA STP CONTAINERIZED MBBR

TITLE:
1-PHASE POWER DISTRIBUTION
24VDC POWER

DESIGNED BY: P. CHAM	DATE: 2022-04-18
CHECKED BY: P. CHAM	DWG #: 301
PROJ #: 2633	SHEET: 301

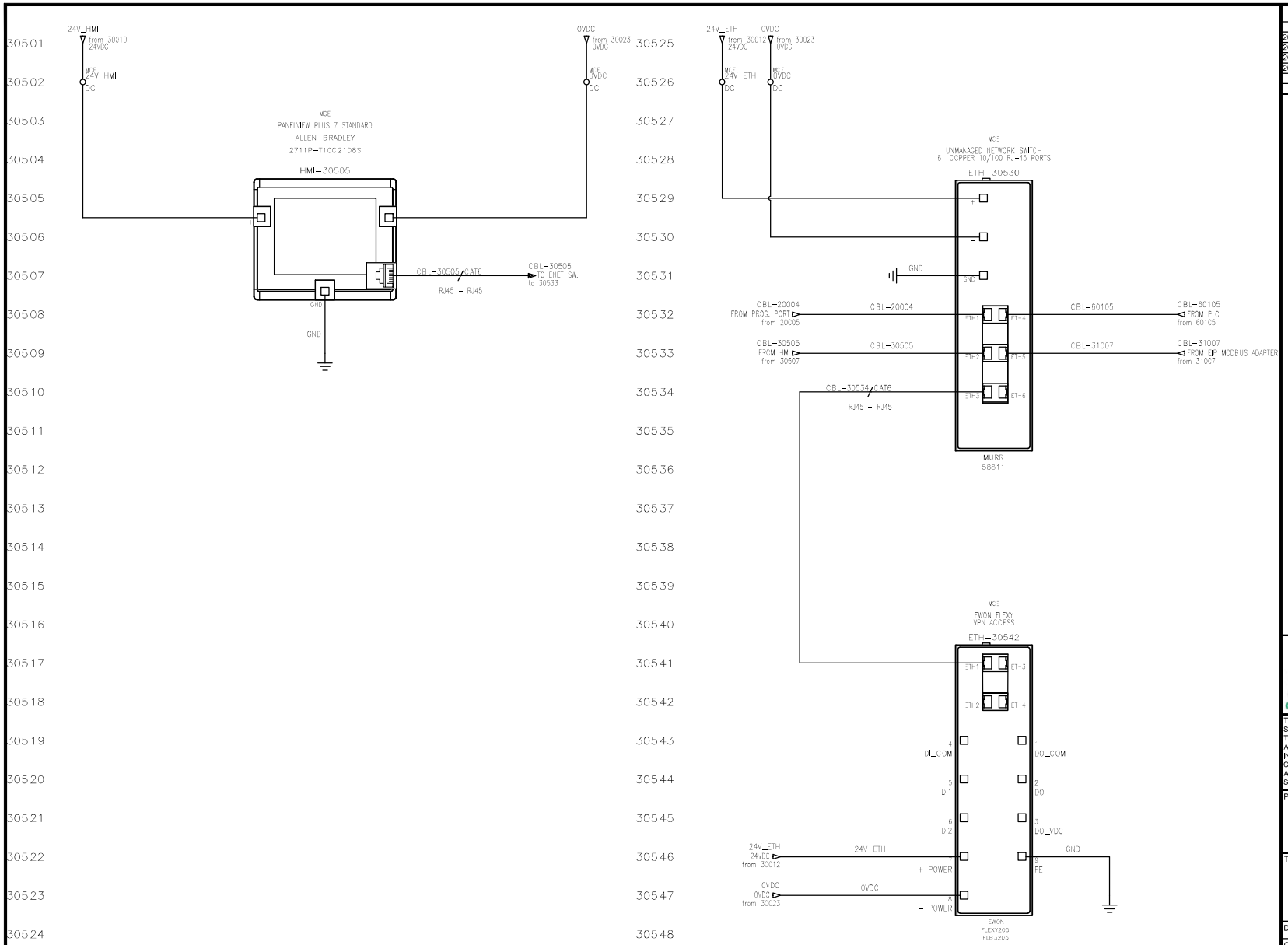

DRAWING REVISION TABLE

DATE	REV	DESCRIPTION	BY
2023-10-26	D2	SCREEN ROOM SRs	
2024-08-20	D8	REDLINES	MI
2025-08-06	D9	UPDATE kA RATING	DM
2025-11-25	D10	CUSTOMER REDLINES	MI

PROJECT REVISION:

D10 - AS INSTALLED
2025-11-25

NOTES:

Poweron CONTROL SYSTEMS LTD.

THIS DRAWING IS PROPERTY OF POWERON CONTROL SYSTEM LTD. THIS DRAWING IS TO BE USED ONLY FOR THE PURPOSE FOR WHICH IT IS INTENDED. IN ACCEPTING THIS DRAWING, YOU AGREE THAT THE INFORMATION CONTAINED HEREIN WILL NOT BE COPIED, REPRODUCED, DISPLAYED OR PASSED ON TO A THIRD PARTY WITHOUT POWERON CONTROL SYSTEM LTD'S WRITTEN CONSENT.

PROJECT:
H2FLOW
EUREKA STP CONTAINERIZED MBBR

TITLE:
1-PHASE POWER DISTRIBUTION
24VDC POWER
HMI & ETHERNET SWITCH

DESIGNED BY: P. CHAM	DATE: 2022-04-18
CHECKED BY: P. CHAM	DWG #: 305
PROJ #: 2633	SHEET: 305

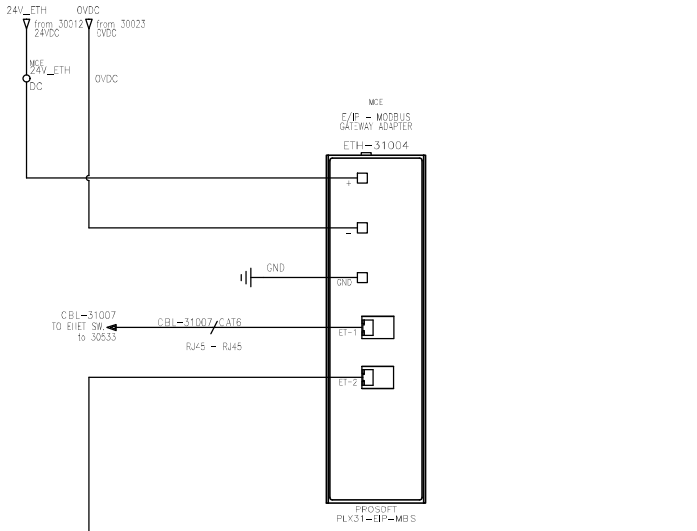

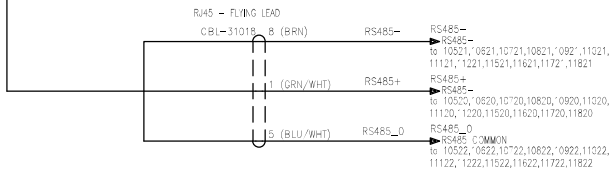

TYPE A - RJ45	
1	GRN/WHT
5	BLU/WHT
8	BRN

TYPE B - RJ45	
1	ORG/WHT
5	BLU/WHT
8	BRN

DRAWING REVISION TABLE

DATE	REV	DESCRIPTION	BY
2023-10-26	D2	SCREEN ROOM SRs	
2024-08-20	D8	REDLINES	MI
2025-08-06	D9	UPDATE kA RATING	DM
2025-11-25	D10	CUSTOMER REDLINES	MI

PROJECT REVISION:

D10 - AS INSTALLED
2025-11-25

NOTES:

Poweron CONTROL SYSTEMS LTD.

THIS DRAWING IS PROPERTY OF POWERON CONTROL SYSTEM LTD. THIS DRAWING IS TO BE USED ONLY FOR THE PURPOSE FOR WHICH IT IS INTENDED. IN ACCEPTING THIS DRAWING, YOU AGREE THAT THE INFORMATION CONTAINED HEREIN WILL NOT BE COPIED, REPRODUCED, DISPLAYED OR PASSED ON TO A THIRD PARTY WITHOUT POWERON CONTROL SYSTEM LTD'S WRITTEN CONSENT.

PROJECT:
H2FLOW
EUREKA STP CONTAINERIZED MBBR

TITLE:
1-PHASE POWER DISTRIBUTION
24VDC POWER
E/IP-MODBUS GATEWAY

DESIGNED BY:	P. CHAM	DATE:	2022-04-18
CHECKED BY:	P. CHAM	DWG #:	310
PROJ #:	2633	SHEET:	310

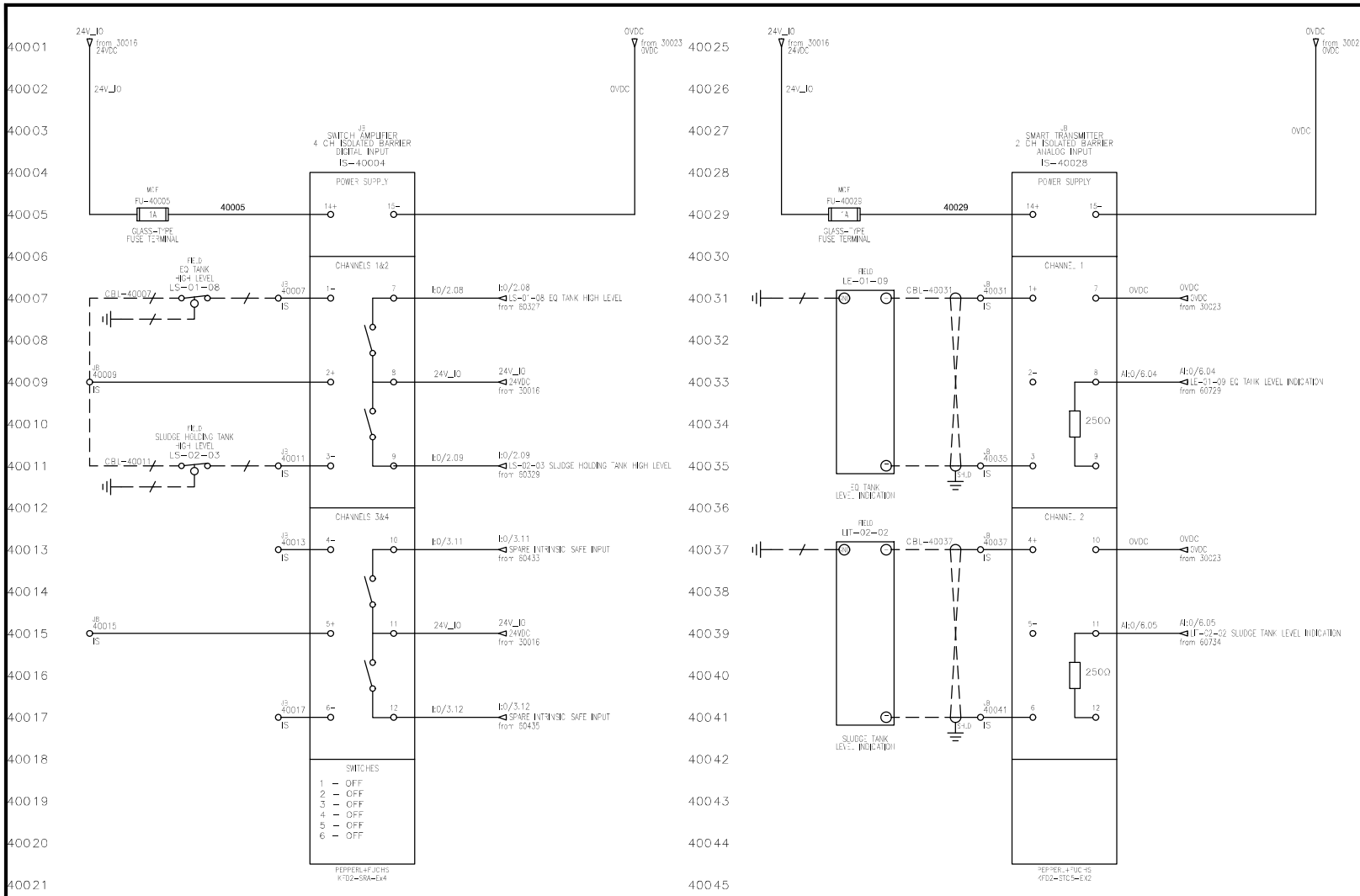

BARRIER	CONDITIONS TO BE SATISFIED	FIELD DEVICE
26.2V (V_{oc})	≤	30.0V(V_{max})
93mA(I_{sc})	≤	133mA(I_{max})
0.634W(P_i)	≤	1.0W(P_i)
0.092uF(C_a)	≥	0.012uF(C_i)
2.68mH(L_a)	≥	0.01mH(L_i)
NOTE: DO NOT USE CABLE LONGER 10 METERS		

BARRIER	CONDITIONS TO BE SATISFIED	FIELD DEVICE
10.6V (V_{oc})	≤	30.0V(V_{max})
19.5mA(I_{sc})	≤	100mA(I_{max})
0.2W(P_o)	≤	1.2W(P_i)
1.273uF(C_a)	≥	0.004uF(C_i)
84.88(L_a)	≥	29.0mH(L_i)
NOTE: DO NOT USE CABLE LONGER 15 METERS		

DRAWING REVISION TABLE

DATE	REV	DESCRIPTION	BY
2023-10-26	D2	SCREEN ROOM SRs	
2024-08-20	D8	REDLINES	MI
2025-08-06	D9	UPDATE kA RATING	DM
2025-11-25	D10	CUSTOMER REDLINES	MI

PROJECT REVISION:

D10 - AS INSTALLED
2025-11-25

NOTES:

Poweron CONTROL SYSTEMS LTD.

THIS DRAWING IS PROPERTY OF POWERON CONTROL SYSTEM LTD. THIS DRAWING IS TO BE USED ONLY FOR THE PURPOSE FOR WHICH IT IS INTENDED. IN ACCEPTING THIS DRAWING, YOU AGREE THAT THE INFORMATION CONTAINED HEREIN WILL NOT BE COPIED, REPRODUCED, DISPLAYED OR PASSED ON TO A THIRD PARTY WITHOUT POWERON CONTROL SYSTEM LTD'S WRITTEN CONSENT.

PROJECT:
H2FLOW
EUREKA STP CONTAINERIZED MBBR

TITLE:
INTRINSIC SAFE BARRIERS
DIGITAL INPUTS & ANALOG INPUTS

DESIGNED BY: P. CHAM	DATE: 2022-04-18
CHECKED BY: P. CHAM	DWG #: 400
PROJ #: 2633	SHEET: 400

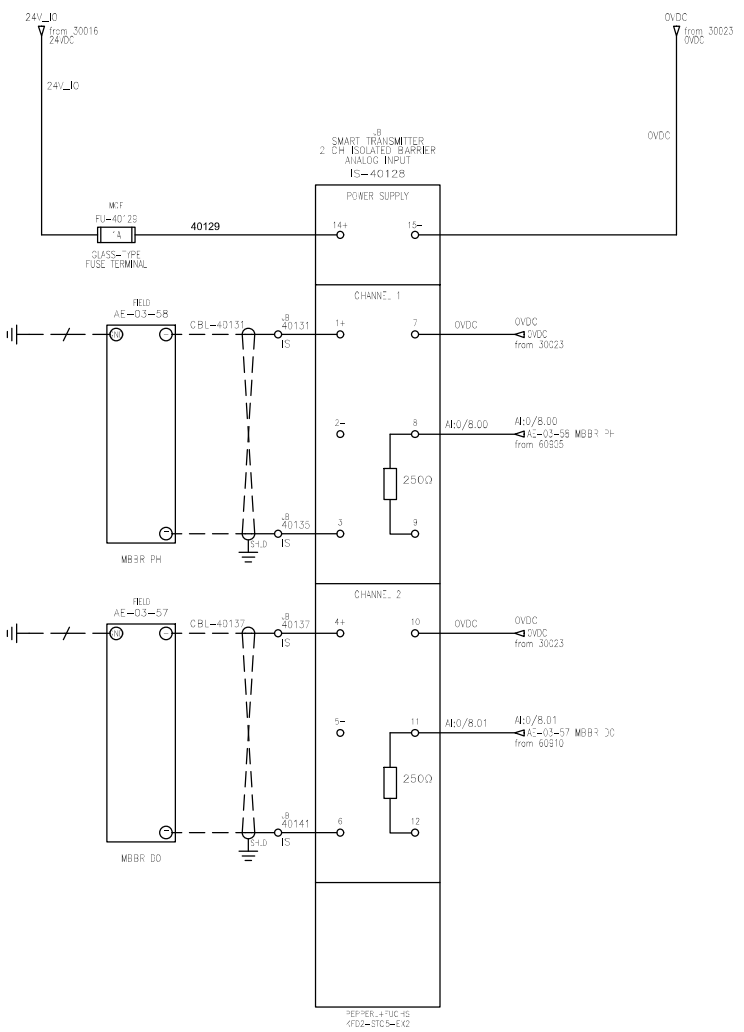

DRAWING REVISION TABLE			
DATE	REV	DESCRIPTION	BY
2023-10-26	D2	SCREEN ROOM SRs	
2024-08-20	D8	REDLINES	MI
2025-08-06	D9	UPDATE kA RATING	DM
2025-11-25	D10	CUSTOMER REDLINES	MI

PROJECT REVISION:

D10 - AS INSTALLED
2025-11-25

NOTES:

THIS DRAWING IS PROPERTY OF POWERON CONTROL SYSTEM LTD. THIS DRAWING IS TO BE USED ONLY FOR THE PURPOSE FOR WHICH IT IS INTENDED. IN ACCEPTING THIS DRAWING, YOU AGREE THAT THE INFORMATION CONTAINED HEREIN WILL NOT BE COPIED, REPRODUCED, DISPLAYED OR PASSED ON TO A THIRD PARTY WITHOUT POWERON CONTROL SYSTEM LTD'S WRITTEN CONSENT.

PROJECT:
H2FLOW
EUREKA STP CONTAINERIZED MBBR

TITLE:
INTRINSIC SAFE BARRIERS
DIGITAL INPUTS & ANALOG INPUTS

DESIGNED BY:	P. CHAM	DATE:	2022-04-18
CHECKED BY:	P. CHAM	DWG #:	401
PROJ #:	2633	SHEET:	401

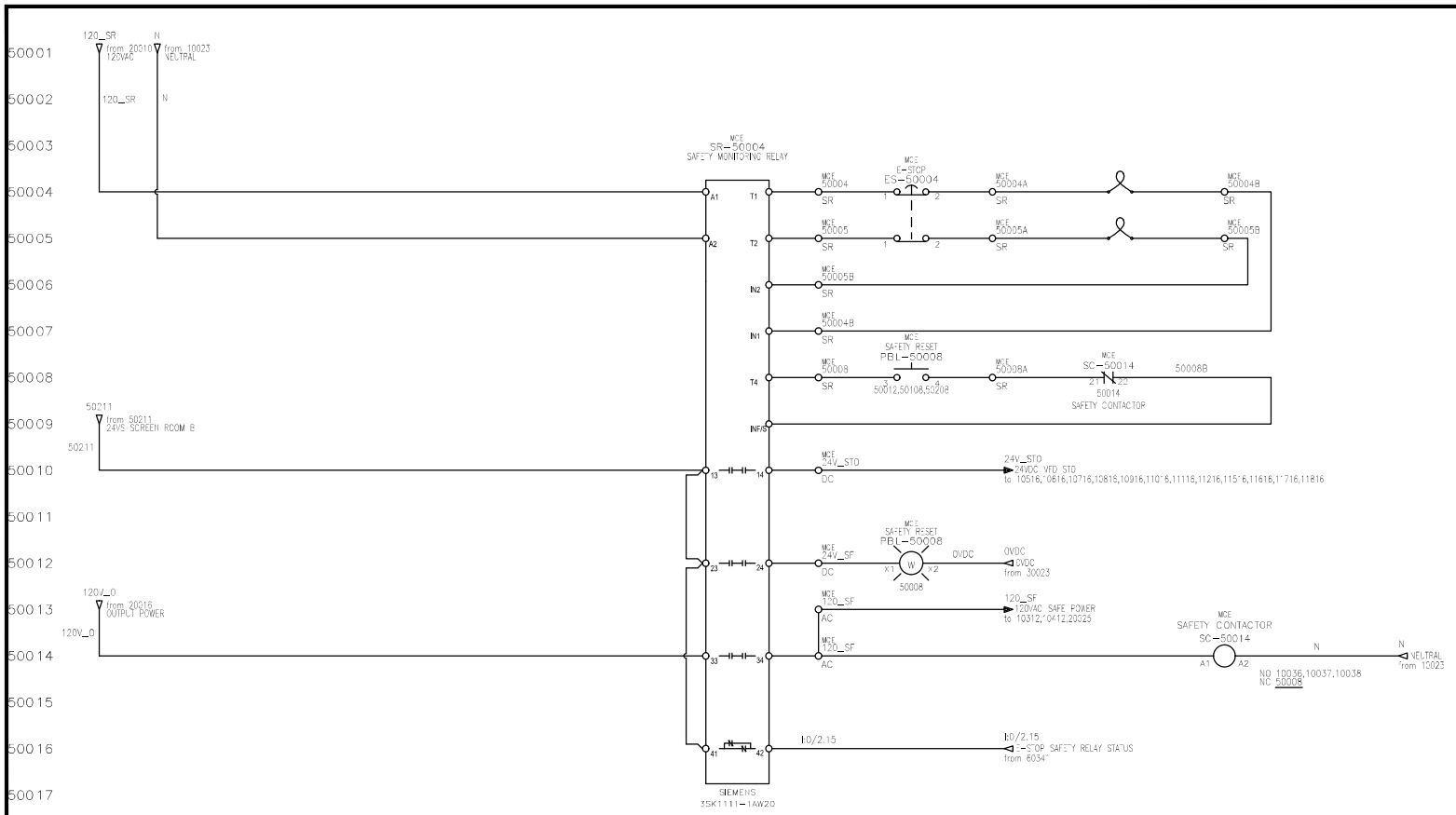

DRAWING REVISION TABLE

DATE	REV	DESCRIPTION	BY
2023-10-26	D2	SCREEN ROOM SRs	
2024-08-20	D8	REDLINES	MI
2025-08-06	D9	UPDATE kA RATING	DM
2025-11-25	D10	CUSTOMER REDLINES	MI

PROJECT REVISION:

D10 - AS INSTALLED
2025-11-25

NOTES:

PowerOn CONTROL SYSTEMS LTD.

THIS DRAWING IS PROPERTY OF POWERON CONTROL SYSTEM LTD. THIS DRAWING IS TO BE USED ONLY FOR THE PURPOSE FOR WHICH IT IS INTENDED. IN ACCEPTING THIS DRAWING, YOU AGREE THAT THE INFORMATION CONTAINED HEREIN WILL NOT BE COPIED, REPRODUCED, DISPLAYED OR PASSED ON TO A THIRD PARTY WITHOUT POWERON CONTROL SYSTEM LTD'S WRITTEN CONSENT.

PROJECT:
H2FLOW
EUREKA STP CONTAINERIZED MBBR

TITLE:
SAFETY CIRCUIT
EMERGENCY STOP

DESIGNED BY: P. CHAM	DATE: 2022-04-18
CHECKED BY: P. CHAM	DWG #: 500
PROJ #: 2633	SHEET: 500

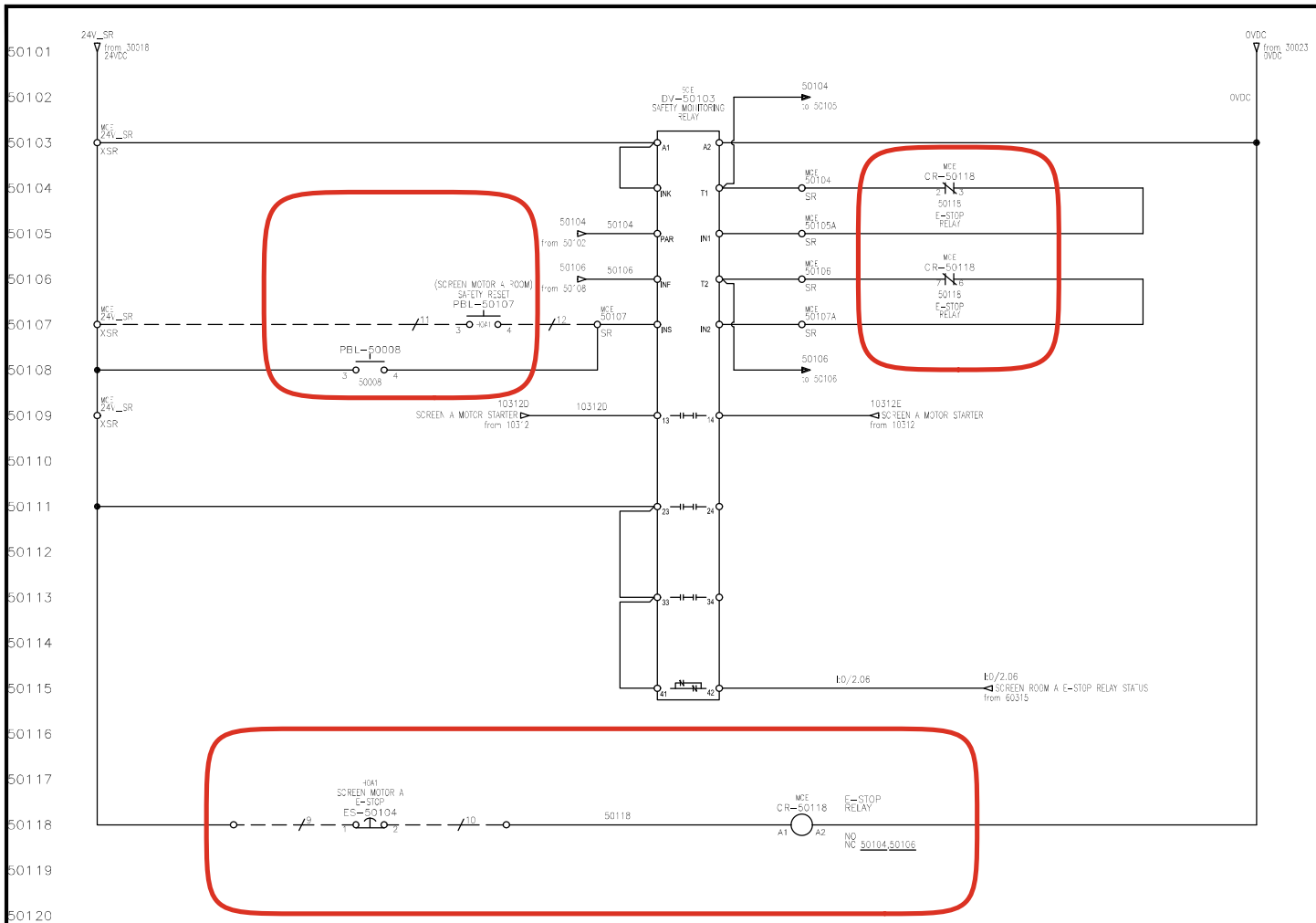

DRAWING REVISION TABLE

DATE	REV	DESCRIPTION	BY
2023-10-26	D2	SCREEN ROOM SRs	
2024-08-20	D8	REDLINES	MI
2025-08-06	D9	UPDATE kA RATING	DM
2025-11-25	D10	CUSTOMER REDLINES	MI

PROJECT REVISION:

D10 - AS INSTALLED
2025-11-25

NOTES:

DIP SWITCH SETTINGS:

1.) ON (RIGHT POSITION) – AUTOSTART / MONITORED START.
2.) ON (RIGHT POSITION) – CROSS FAULT DETECTION OFF / ON.
3.) ON (RIGHT POSITION) – 2 SINGLE-CH. SENSORS / 1 DOUBLE-CH. SENSOR
4.) N/A.

Poweron CONTROL SYSTEMS LTD.

THIS DRAWING IS PROPERTY OF POWERON CONTROL SYSTEM LTD. THIS DRAWING IS TO BE USED ONLY FOR THE PURPOSE FOR WHICH IT IS INTENDED. IN ACCEPTING THIS DRAWING, YOU AGREE THAT THE INFORMATION CONTAINED HEREIN WILL NOT BE COPIED, REPRODUCED, DISPLAYED OR PASSED ON TO A THIRD PARTY WITHOUT POWERON CONTROL SYSTEM LTD'S WRITTEN CONSENT.

PROJECT:
H2FLOW
EUREKA STP CONTAINERIZED MBBR

TITLE:
SAFETY CIRCUIT
EMERGENCY STOP
SCREEN MOTOR A

DESIGNED BY:	P. CHAM	DATE:	2022-04-18
CHECKED BY:	P. CHAM	DWG #:	501
PROJ #:	2633	SHEET:	501

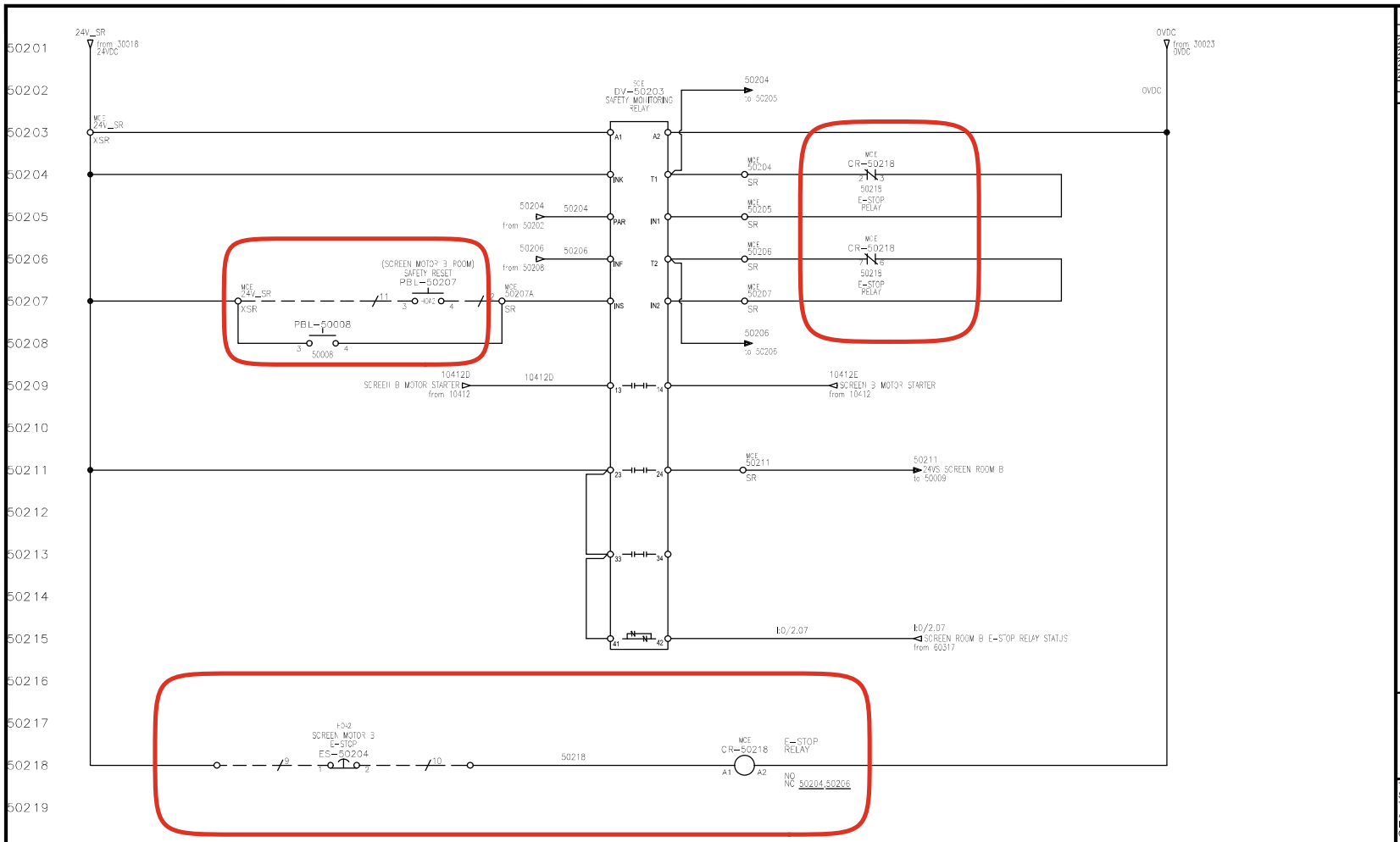

DRAWING REVISION TABLE

DATE	REV	DESCRIPTION	BY
2023-10-26	D2	SCREEN ROOM SRs	
2024-08-20	D8	REDLINES	MI
2025-08-06	D9	UPDATE kA RATING	DM
2025-11-25	D10	CUSTOMER REDLINES	MI

PROJECT REVISION:

D10 - AS INSTALLED
2025-11-25

NOTES:

DIP SWITCH SETTINGS:

1.) ON (RIGHT POSITION) – AUTOSTART / MONITORED START.
2.) ON (RIGHT POSITION) – CROSS FAULT DETECTION OFF / ON.
3.) ON (RIGHT POSITION) – 2 SINGLE-CH. SENSORS / 1 DOUBLE-CH. SENSOR
4.) N/A.

Poweron CONTROL SYSTEMS LTD.

THIS DRAWING IS PROPERTY OF POWERON CONTROL SYSTEM LTD. THIS DRAWING IS TO BE USED ONLY FOR THE PURPOSE FOR WHICH IT IS INTENDED. IN ACCEPTING THIS DRAWING, YOU AGREE THAT THE INFORMATION CONTAINED HEREIN WILL NOT BE COPIED, REPRODUCED, DISPLAYED OR PASSED ON TO A THIRD PARTY WITHOUT POWERON CONTROL SYSTEM LTD'S WRITTEN CONSENT.

PROJECT:
H2FLOW
EUREKA STP CONTAINERIZED MBBR

TITLE:
SAFETY CIRCUIT
EMERGENCY STOP
SCREEN MOTOR B

DESIGNED BY:	P. CHAM	DATE:	2022-04-18
CHECKED BY:	P. CHAM	DWG #:	502
PROJ #:	2633	SHEET:	502

60001
60002
60003
60004
60005
60006
60007
60008
60009
60010
60011
60012
60013
60014
60015
60016
60017
60018
60019
60020
60021
60022
60023
60024

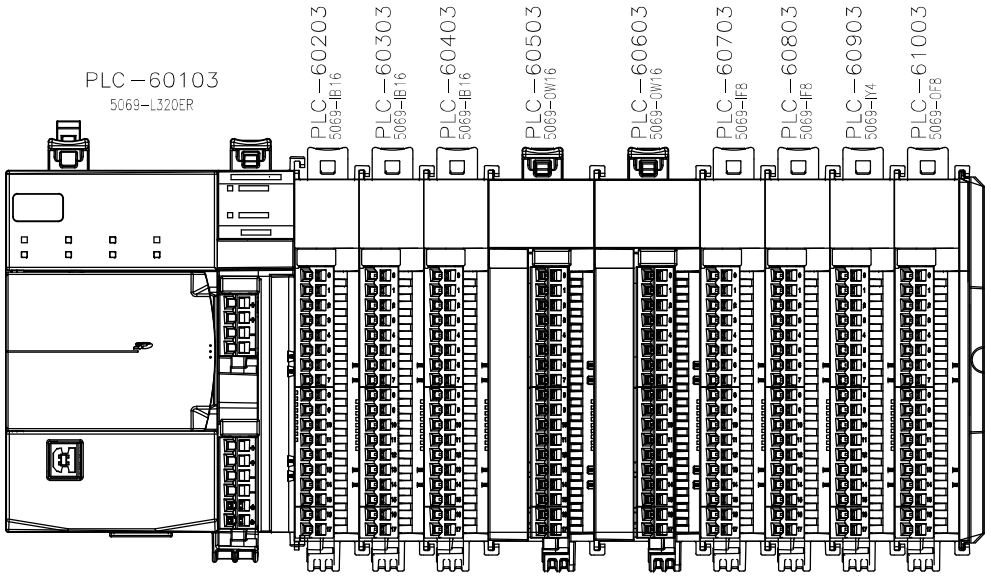

DRAWING REVISION TABLE

DATE	REV	DESCRIPTION	BY
2023-10-26	D2	SCREEN ROOM SRs	
2024-08-20	D8	REDLINES	MI
2025-08-06	D9	UPDATE kA RATING	DM
2025-11-25	D10	CUSTOMER REDLINES	MI

PROJECT REVISION:

D10 - AS INSTALLED
2025-11-25

NOTES:

Poweron CONTROL SYSTEMS LTD.

THIS DRAWING IS PROPERTY OF POWERON CONTROL SYSTEM LTD. THIS DRAWING IS TO BE USED ONLY FOR THE PURPOSE FOR WHICH IT IS INTENDED. IN ACCEPTING THIS DRAWING, YOU AGREE THAT THE INFORMATION CONTAINED HEREIN WILL NOT BE COPIED, REPRODUCED, DISPLAYED OR PASSED ON TO A THIRD PARTY WITHOUT POWERON CONTROL SYSTEM LTD'S WRITTEN CONSENT.

PROJECT:
H2FLOW
EUREKA STP CONTAINERIZED MBBR

TITLE:
PLC RACK 0 LAYOUT

DESIGNED BY: P. CHAM	DATE: 2022-04-18
CHECKED BY: P. CHAM	DWG #: 600
PROJ #: 2633	SHEET: 600

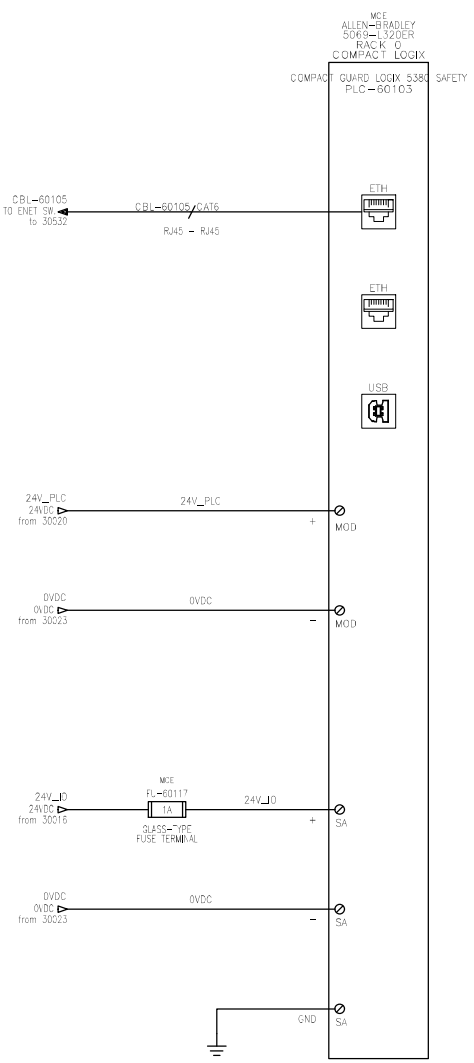

DRAWING REVISION TABLE			
DATE	REV	DESCRIPTION	BY
2023-10-26	D2	SCREEN ROOM SRs	
2024-08-20	D8	REDLINES	MI
2025-08-06	D9	UPDATE kA RATING	DM
2025-11-25	D10	CUSTOMER REDLINES	MI

PROJECT REVISION:

D10 - AS INSTALLED

2025-11-25

NOTES:

THIS DRAWING IS PROPERTY OF POWERON CONTROL SYSTEM LTD. THIS DRAWING IS TO BE USED ONLY FOR THE PURPOSE FOR WHICH IT IS INTENDED. IN ACCEPTING THIS DRAWING, YOU AGREE THAT THE INFORMATION CONTAINED HEREIN WILL NOT BE COPIED, REPRODUCED, DISPLAYED OR PASSED ON TO A THIRD PARTY WITHOUT POWERON CONTROL SYSTEM LTD'S WRITTEN CONSENT.

PROJECT:

H2FLOW

EUREKA STP CONTAINERIZED MBBR

TITLE:

PLC RACK 0 SLOT 0
CONTROLLER - POWER & NETWORK

DESIGNED BY:	P. CHAM	DATE:	2022-04-18
CHECKED BY:	P. CHAM	DWG #:	601
PROJ #:	2633	SHEET:	601

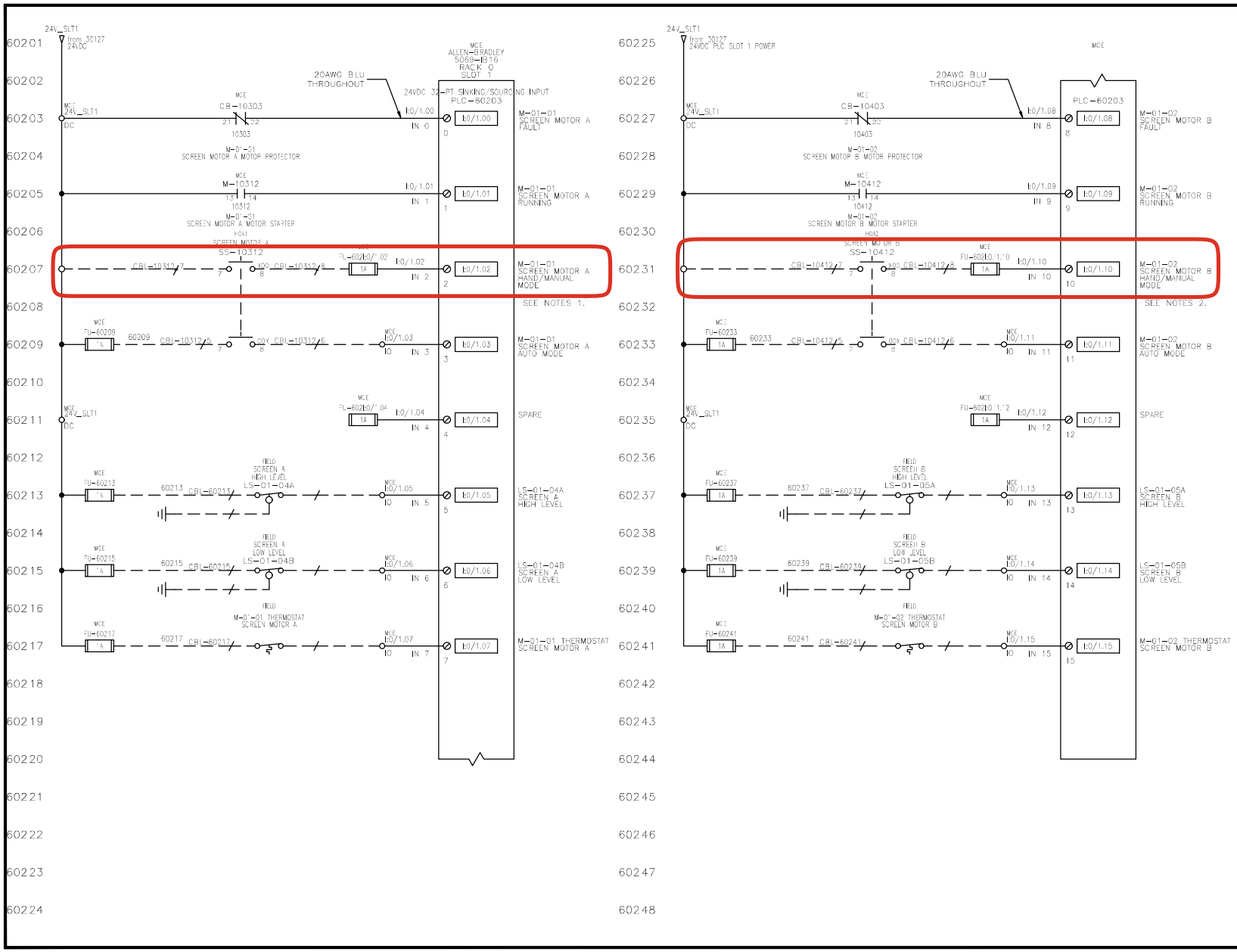

DRAWING REVISION TABLE

DATE	REV	DESCRIPTION	BY
2023-10-26	D2	SCREEN ROOM SRs	
2024-08-20	D8	REDLINES	MI
2025-08-06	D9	UPDATE kA RATING	DM
2025-11-25	D10	CUSTOMER REDLINES	MI

PROJECT REVISION:

D10 - AS INSTALLED
2025-11-25

NOTES:

I/O TERMINALS TO BE FUSED-TYPE ON THIS AND SUBSEQUENT PAGES.

CLOUD REVISIONS:
1.) CONTACT FOR SELECTOR SWITCH SS-10312 HAS BEEN REMOVED.

2.) CONTACT FOR SELECTOR SWITCH SS-10412 HAS BEEN REMOVED.

Poweron CONTROL SYSTEMS LTD.

THIS DRAWING IS PROPERTY OF POWERON CONTROL SYSTEM LTD. THIS DRAWING IS TO BE USED ONLY FOR THE PURPOSE FOR WHICH IT IS INTENDED. IN ACCEPTING THIS DRAWING, YOU AGREE THAT THE INFORMATION CONTAINED HEREIN WILL NOT BE COPIED, REPRODUCED, DISPLAYED OR PASSED ON TO A THIRD PARTY WITHOUT POWERON CONTROL SYSTEM LTD'S WRITTEN CONSENT.

PROJECT:
H2FLOW
EUREKA STP CONTAINERIZED MBBR

TITLE:
PLC RACK 0 SLOT 1
DIGITAL INPUTS
I:0/1.00 - I:0/1.15

DESIGNED BY: P. CHAM	DATE: 2022-04-18
CHECKED BY: P. CHAM	DWG #: 602
PROJ #: 2633	SHEET: 602

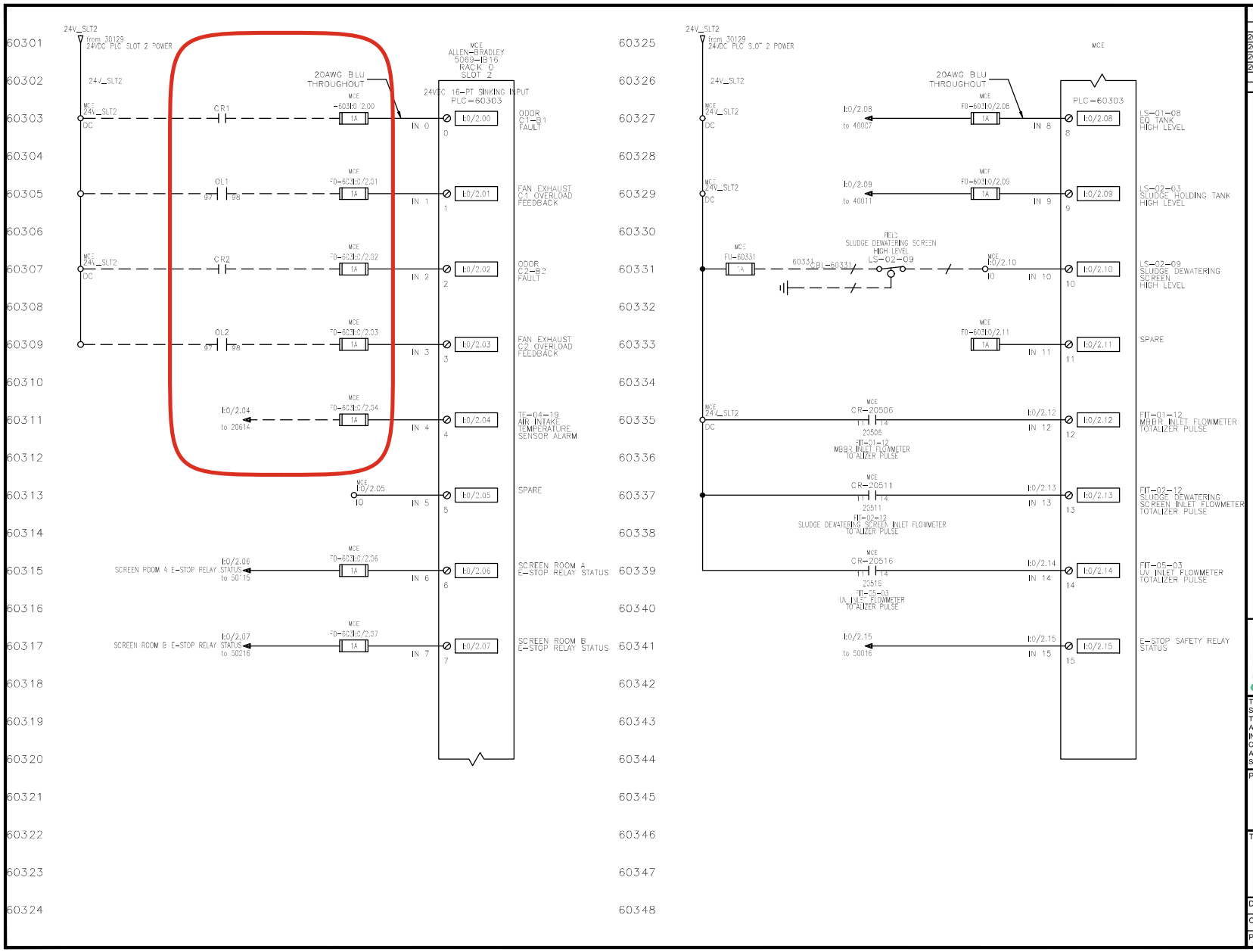

DRAWING REVISION TABLE

DATE	REV	DESCRIPTION	BY
2023-10-26	D2	SCREEN ROOM SRs	
2024-08-20	D8	REDLINES	MI
2025-08-06	D9	UPDATE kA RATING	DM
2025-11-25	D10	CUSTOMER REDLINES	MI

PROJECT REVISION:

D10 - AS INSTALLED
2025-11-25

NOTES:

Poweron CONTROL SYSTEMS LTD.

THIS DRAWING IS PROPERTY OF POWERON CONTROL SYSTEM LTD. THIS DRAWING IS TO BE USED ONLY FOR THE PURPOSE FOR WHICH IT IS INTENDED. IN ACCEPTING THIS DRAWING, YOU AGREE THAT THE INFORMATION CONTAINED HEREIN WILL NOT BE COPIED, REPRODUCED, DISPLAYED OR PASSED ON TO A THIRD PARTY WITHOUT POWERON CONTROL SYSTEM LTD'S WRITTEN CONSENT.

PROJECT:
H2FLOW
EUREKA STP CONTAINERIZED MBBR

TITLE:
PLC RACK 0 SLOT 2
DIGITAL INPUTS
I:0/2.00 - I:0/2.15

DESIGNED BY: P. CHAM	DATE: 2022-04-18
CHECKED BY: P. CHAM	DWG #: 603
PROJ #: 2633	SHEET: 603

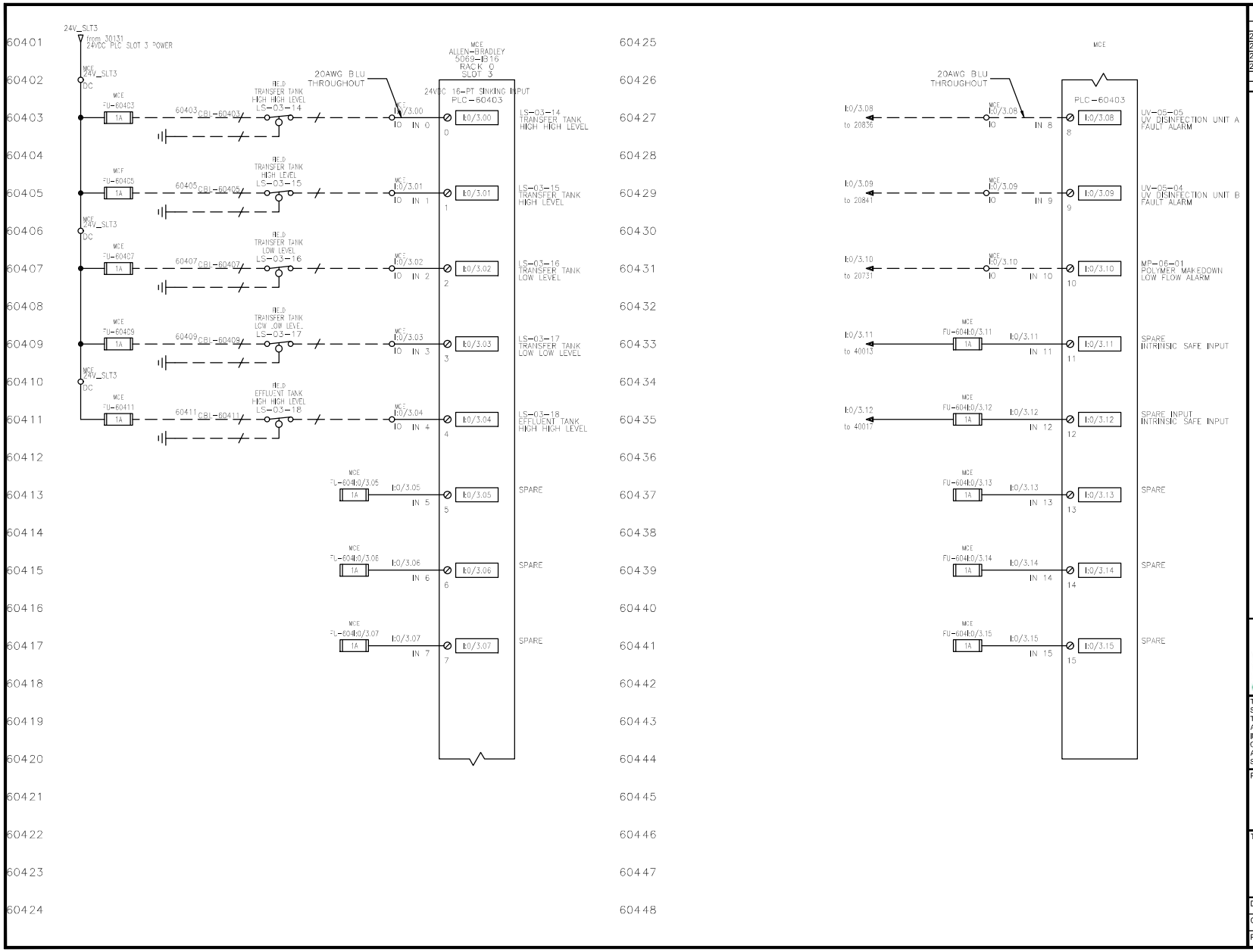

DRAWING REVISION TABLE			
DATE	REV	DESCRIPTION	BY
2023-10-26	D2	SCREEN ROOM SRs	
2024-08-20	D8	REDLINES	MI
2025-08-06	D9	UPDATE kA RATING	DM
2025-11-25	D10	CUSTOMER REDLINES	MI

PROJECT REVISION:

D10 - AS INSTALLED
2025-11-25

NOTES:

Poweron CONTROL SYSTEMS LTD.

THIS DRAWING IS PROPERTY OF POWERON CONTROL SYSTEM LTD. THIS DRAWING IS TO BE USED ONLY FOR THE PURPOSE FOR WHICH IT IS INTENDED. IN ACCEPTING THIS DRAWING, YOU AGREE THAT THE INFORMATION CONTAINED HEREIN WILL NOT BE COPIED, REPRODUCED, DISPLAYED OR PASSED ON TO A THIRD PARTY WITHOUT POWERON CONTROL SYSTEM LTD'S WRITTEN CONSENT.

PROJECT:
H2FLOW
EUREKA STP CONTAINERIZED MBBR

TITLE:
PLC RACK 0 SLOT 3
DIGITAL INPUTS
I:0/3.00 - I:0/3.15

DESIGNED BY: P. CHAM	DATE: 2022-04-18
CHECKED BY: P. CHAM	DWG #: 604
PROJ #: 2633	SHEET: 604

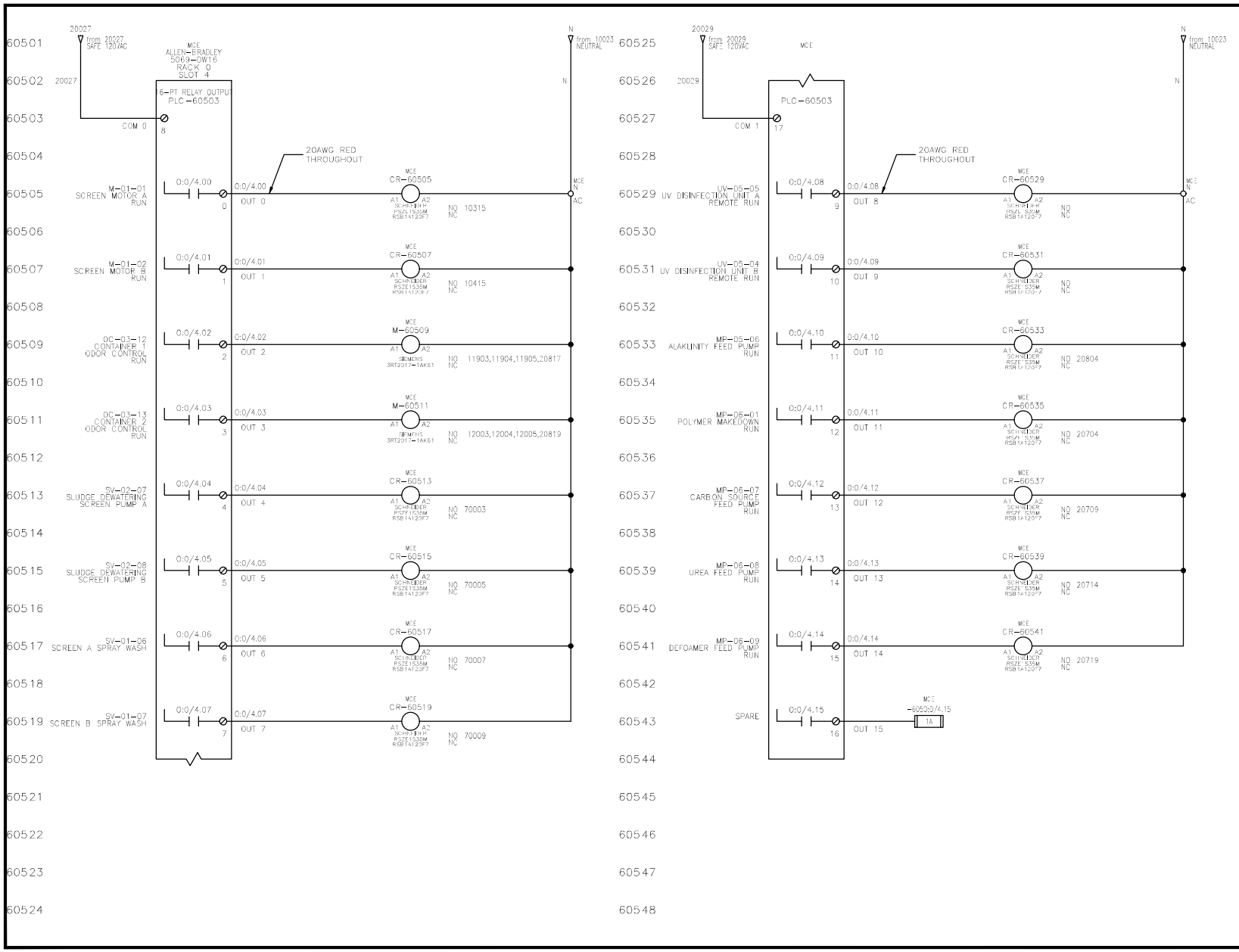

DRAWING REVISION TABLE

DATE	REV	DESCRIPTION	BY
2023-10-26	D2	SCREEN ROOM SRs	
2024-08-20	D8	REDLINES	MI
2025-08-06	D9	UPDATE kA RATING	DM
2025-11-25	D10	CUSTOMER REDLINES	MI

PROJECT REVISION:

D10 - AS INSTALLED
2025-11-25

NOTES:

Poweron CONTROL SYSTEMS LTD.

THIS DRAWING IS PROPERTY OF POWERON CONTROL SYSTEM LTD. THIS DRAWING IS TO BE USED ONLY FOR THE PURPOSE FOR WHICH IT IS INTENDED. IN ACCEPTING THIS DRAWING, YOU AGREE THAT THE INFORMATION CONTAINED HEREIN WILL NOT BE COPIED, REPRODUCED, DISPLAYED OR PASSED ON TO A THIRD PARTY WITHOUT POWERON CONTROL SYSTEM LTD'S WRITTEN CONSENT.

PROJECT:
H2FLOW
EUREKA STP CONTAINERIZED MBBR

TITLE:
PLC RACK 0 SLOT 4
DIGITAL OUTPUTS
O:0/4.00 - O:0/4.15

DESIGNED BY: P. CHAM		DATE: 2022-04-18	
CHECKED BY: P. CHAM		DWG #: 605	
PROJ #: 2633		SHEET: 605	

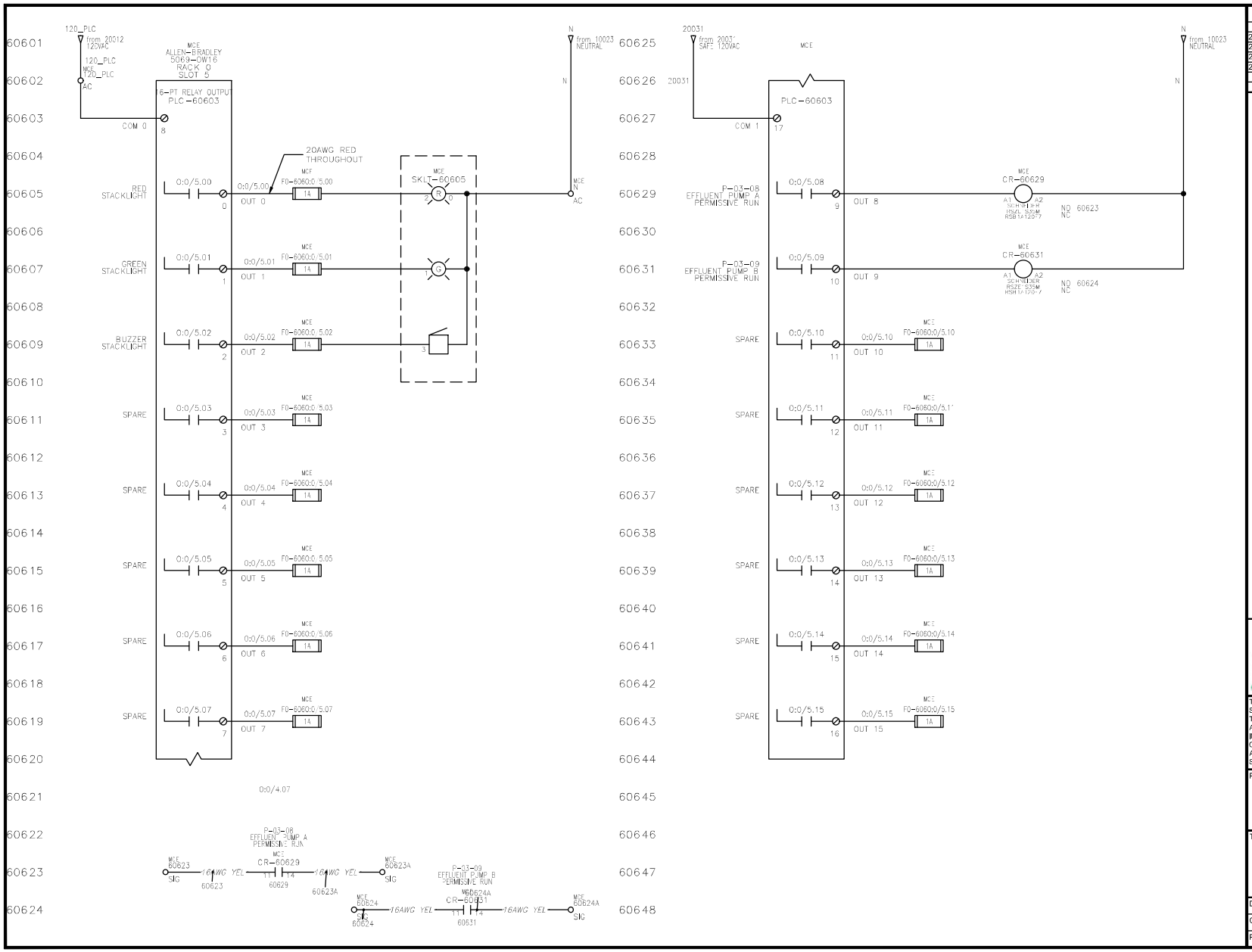

DRAWING REVISION TABLE			
DATE	REV	DESCRIPTION	BY
2023-10-26	D2	SCREEN ROOM SRs	
2024-08-20	D8	REDLINES	MI
2025-08-06	D9	UPDATE kA RATING	DM
2025-11-25	D10	CUSTOMER REDLINES	MI

PROJECT REVISION:

D10 - AS INSTALLED
2025-11-25

NOTES:

THIS DRAWING IS PROPERTY OF POWERON CONTROL SYSTEM LTD. THIS DRAWING IS TO BE USED ONLY FOR THE PURPOSE FOR WHICH IT IS INTENDED. IN ACCEPTING THIS DRAWING, YOU AGREE THAT THE INFORMATION CONTAINED HEREIN WILL NOT BE COPIED, REPRODUCED, DISPLAYED OR PASSED ON TO A THIRD PARTY WITHOUT POWERON CONTROL SYSTEM LTD'S WRITTEN CONSENT.

PROJECT:
H2FLOW
EUREKA STP CONTAINERIZED MBBR

TITLE:
PLC RACK 0 SLOT 5
DIGITAL OUTPUTS
O:0/5.00 - O:0/5.15

DESIGNED BY: P. CHAM		DATE: 2022-04-18	
CHECKED BY: P. CHAM		DWG #: 606	
PROJ #: 2633		SHEET: 606	

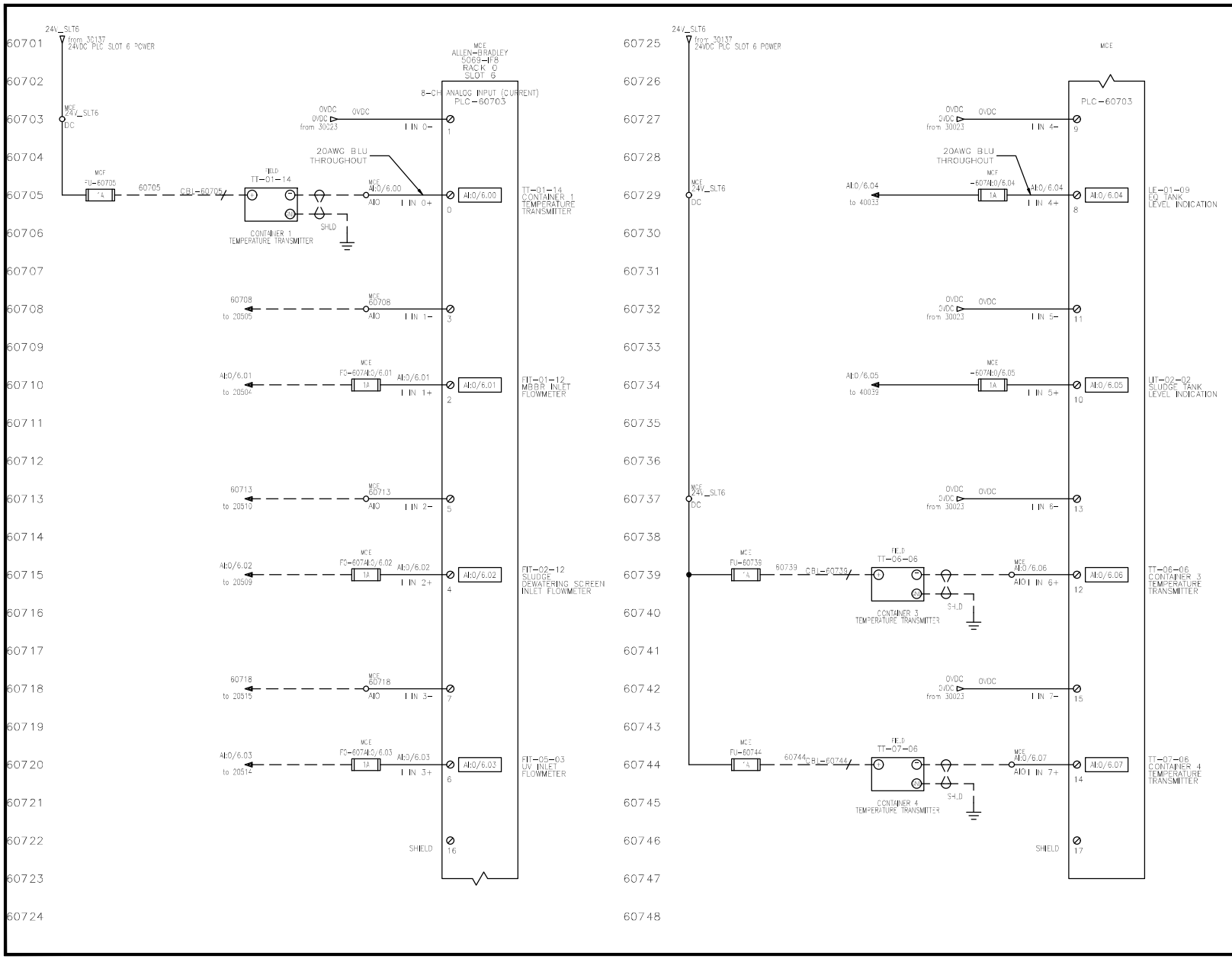

DRAWING REVISION TABLE

DATE	REV	DESCRIPTION	BY
2023-10-26	D2	SCREEN ROOM SRs	
2024-08-20	D8	REDLINES	MI
2025-08-06	D9	UPDATE kA RATING	DM
2025-11-25	D10	CUSTOMER REDLINES	MI

PROJECT REVISION:

D10 - AS INSTALLED
2025-11-25

NOTES:

Poweron CONTROL SYSTEMS LTD.

THIS DRAWING IS PROPERTY OF POWERON CONTROL SYSTEM LTD. THIS DRAWING IS TO BE USED ONLY FOR THE PURPOSE FOR WHICH IT IS INTENDED. IN ACCEPTING THIS DRAWING, YOU AGREE THAT THE INFORMATION CONTAINED HEREIN WILL NOT BE COPIED, REPRODUCED, DISPLAYED OR PASSED ON TO A THIRD PARTY WITHOUT POWERON CONTROL SYSTEM LTD'S WRITTEN CONSENT.

PROJECT:
H2FLOW
EUREKA STP CONTAINERIZED MBBR

TITLE:
PLC RACK 0 SLOT 6
ANALOG INPUTS
AI:0/6.00 - AI:0/6.07

DESIGNED BY: P. CHAM	DATE: 2022-04-18
CHECKED BY: P. CHAM	DWG #: 607
PROJ #: 2633	SHEET: 607

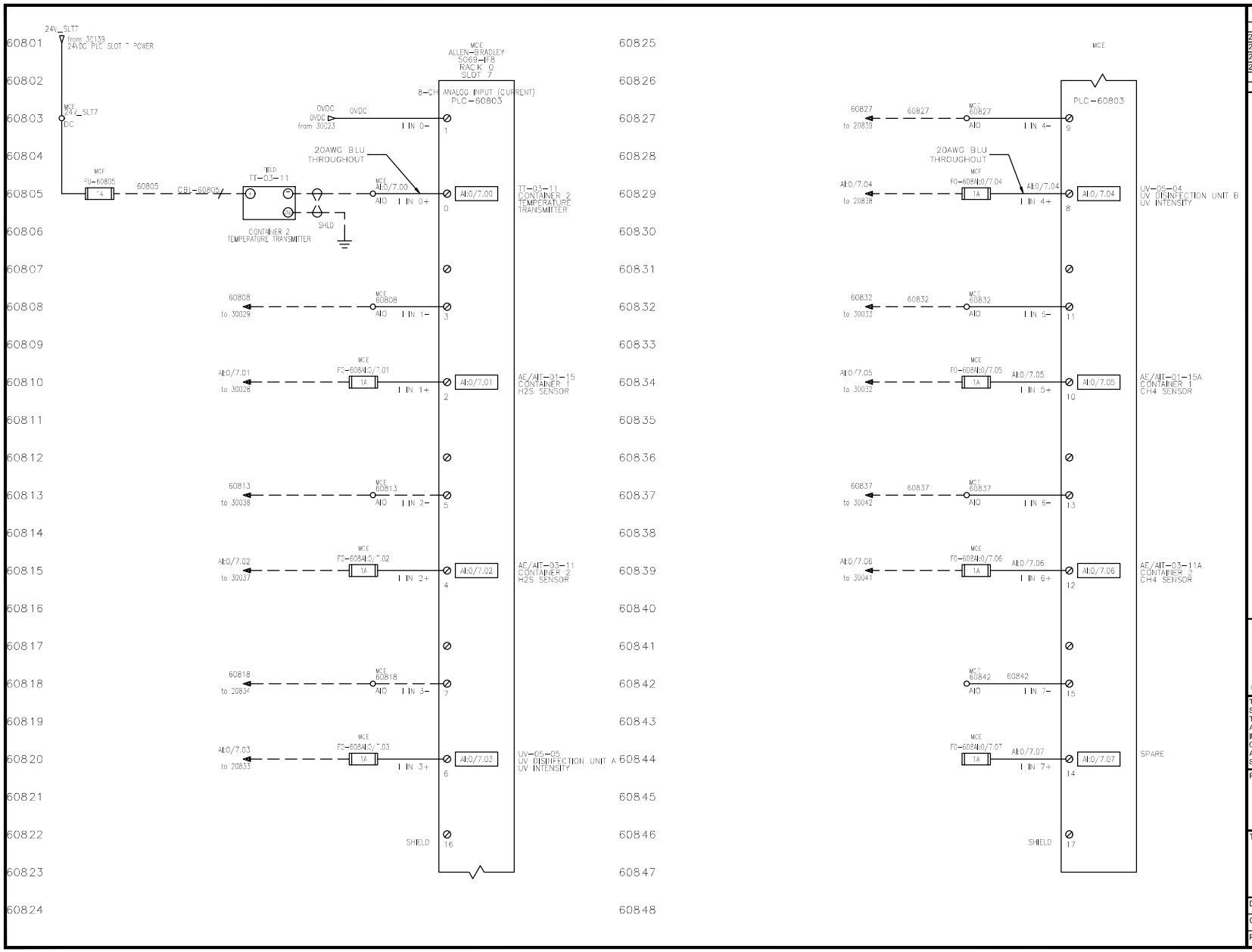

DRAWING REVISION TABLE

DATE	REV	DESCRIPTION	BY
2023-10-26	D2	SCREEN ROOM SRs	
2024-08-20	D8	REDLINES	MI
2025-08-06	D9	UPDATE kA RATING	DM
2025-11-25	D10	CUSTOMER REDLINES	MI

PROJECT REVISION:

D10 - AS INSTALLED

2025-11-25

NOTES:

Poweron CONTROL SYSTEMS LTD.

THIS DRAWING IS PROPERTY OF POWERON CONTROL SYSTEM LTD. THIS DRAWING IS TO BE USED ONLY FOR THE PURPOSE FOR WHICH IT IS INTENDED. IN ACCEPTING THIS DRAWING, YOU AGREE THAT THE INFORMATION CONTAINED HEREIN WILL NOT BE COPIED, REPRODUCED, DISPLAYED OR PASSED ON TO A THIRD PARTY WITHOUT POWERON CONTROL SYSTEM LTD'S WRITTEN CONSENT.

PROJECT:

H2FLOW

EUREKA STP CONTAINERIZED MBBR

TITLE:

PLC RACK 0 SLOT 7
ANALOG INPUTS
AI:0/7.00 - AI:0/7.07

DESIGNED BY:	P. CHAM	DATE:	2022-04-18
CHECKED BY:	P. CHAM	DWG #:	608
PROJ #:	2633	SHEET:	608

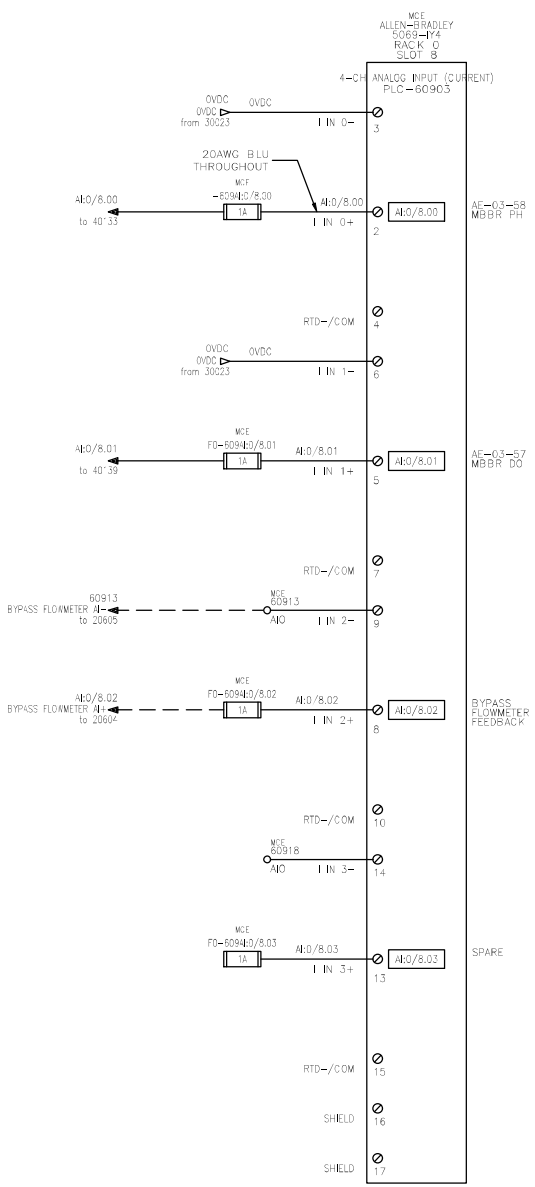

DRAWING REVISION TABLE

DATE	REV	DESCRIPTION	BY
2023-10-26	D2	SCREEN ROOM SRs	
2024-08-20	D8	REDLINES	MI
2025-08-06	D9	UPDATE kA RATING	DM
2025-11-25	D10	CUSTOMER REDLINES	MI

PROJECT REVISION:

D10 - AS INSTALLED

2025-11-25

NOTES:

Poweron CONTROL SYSTEMS LTD.

THIS DRAWING IS PROPERTY OF POWERON CONTROL SYSTEM LTD. THIS DRAWING IS TO BE USED ONLY FOR THE PURPOSE FOR WHICH IT IS INTENDED. IN ACCEPTING THIS DRAWING, YOU AGREE THAT THE INFORMATION CONTAINED HEREIN WILL NOT BE COPIED, REPRODUCED, DISPLAYED OR PASSED ON TO A THIRD PARTY WITHOUT POWERON CONTROL SYSTEM LTD'S WRITTEN CONSENT.

PROJECT:

H2FLOW

EUREKA STP CONTAINERIZED MBBR

TITLE:

PLC RACK 0 SLOT 8
ANALOG INPUTS
AI:0/8.00 - AI:0/8.03

DESIGNED BY:	P. CHAM	DATE:	2022-04-18
CHECKED BY:	P. CHAM	DWG #:	609
PROJ #:	2633	SHEET:	609

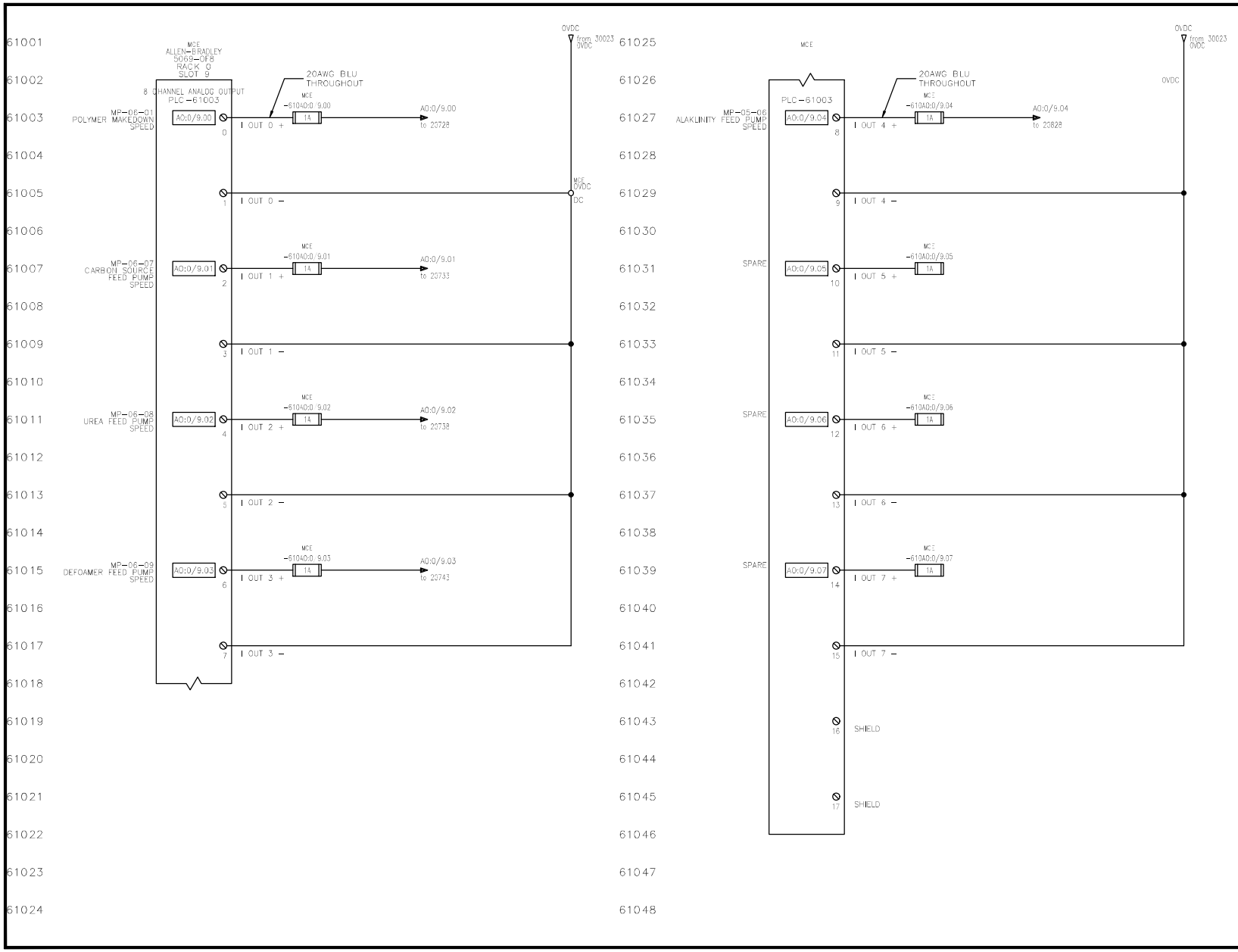

DRAWING REVISION TABLE

DATE	REV	DESCRIPTION	BY
2023-10-26	D2	SCREEN ROOM SRs	
2024-08-20	D8	REDLINES	MI
2025-08-06	D9	UPDATE kA RATING	DM
2025-11-25	D10	CUSTOMER REDLINES	MI

PROJECT REVISION:

D10 - AS INSTALLED
2025-11-25

NOTES:

Poweron CONTROL SYSTEMS LTD.

THIS DRAWING IS PROPERTY OF POWERON CONTROL SYSTEM LTD. THIS DRAWING IS TO BE USED ONLY FOR THE PURPOSE FOR WHICH IT IS INTENDED. IN ACCEPTING THIS DRAWING, YOU AGREE THAT THE INFORMATION CONTAINED HEREIN WILL NOT BE COPIED, REPRODUCED, DISPLAYED OR PASSED ON TO A THIRD PARTY WITHOUT POWERON CONTROL SYSTEM LTD'S WRITTEN CONSENT.

PROJECT:
H2FLOW
EUREKA STP CONTAINERIZED MBBR

TITLE:
PLC RACK 0 SLOT 9
ANALOG OUTPUTS
AO:0/9.00 - AO:0/9.07

DESIGNED BY:	P. CHAM	DATE:	2022-04-18
CHECKED BY:	P. CHAM	DWG #:	610
PROJ #:	2633	SHEET:	610

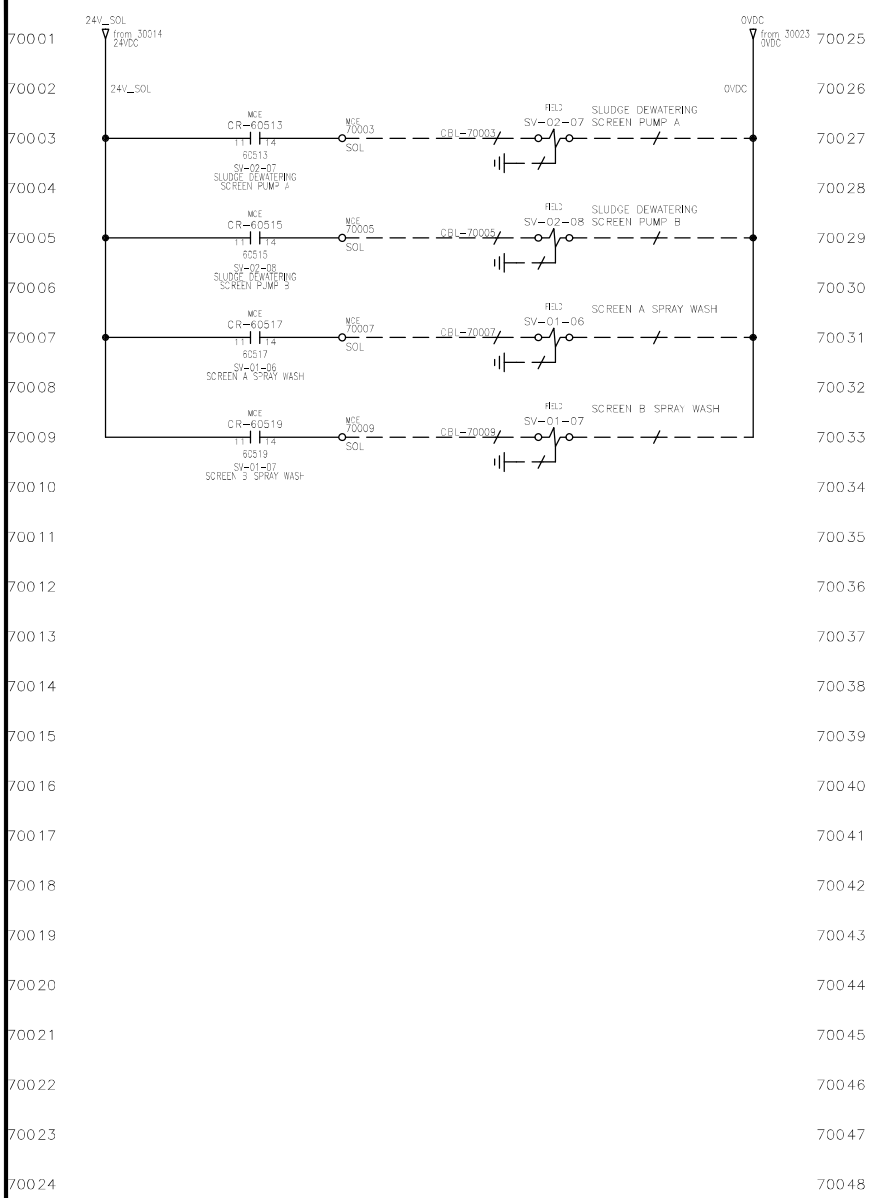

DRAWING REVISION TABLE

DATE	REV	DESCRIPTION	BY
2023-10-26	D2	SCREEN ROOM SRs	
2024-08-20	D8	REDLINES	MI
2025-08-06	D9	UPDATE kA RATING	DM
2025-11-25	D10	CUSTOMER REDLINES	MI

PROJECT REVISION:

D10 - AS INSTALLED

2025-11-25

NOTES:

Poweron CONTROL SYSTEMS LTD.

THIS DRAWING IS PROPERTY OF POWERON CONTROL SYSTEM LTD. THIS DRAWING IS TO BE USED ONLY FOR THE PURPOSE FOR WHICH IT IS INTENDED. IN ACCEPTING THIS DRAWING, YOU AGREE THAT THE INFORMATION CONTAINED HEREIN WILL NOT BE COPIED, REPRODUCED, DISPLAYED OR PASSED ON TO A THIRD PARTY WITHOUT POWERON CONTROL SYSTEM LTD'S WRITTEN CONSENT.

PROJECT:

H2FLOW

EUREKA STP CONTAINERIZED MBBR

TITLE:

SOLENOID VALVES

DESIGNED BY: P. CHAM	DATE: 2022-04-18
CHECKED BY: P. CHAM	DWG #: 700
PROJ #: 2633	SHEET: 700

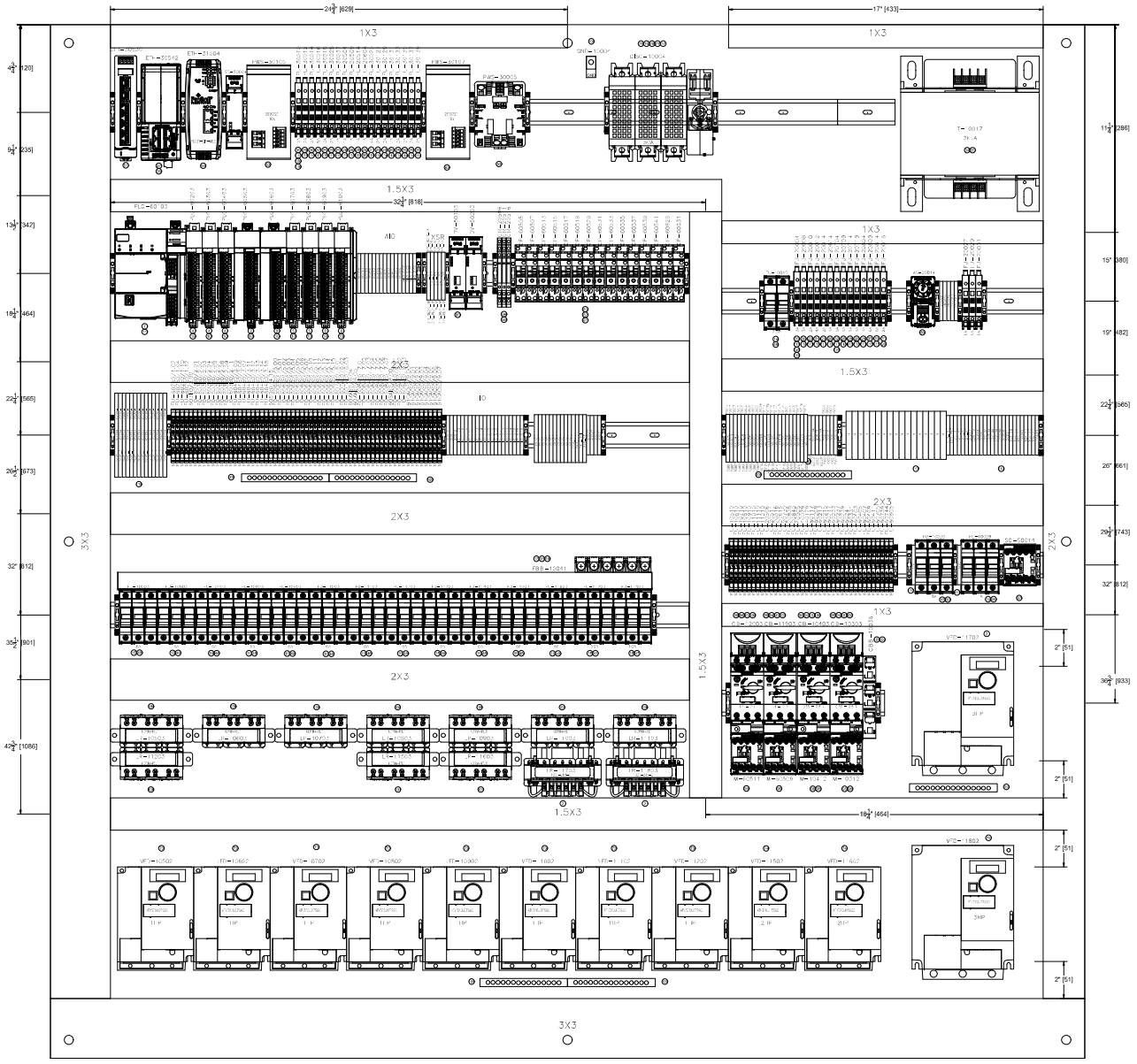

DRAWING REVISION TABLE			
DATE	REV	DESCRIPTION	BY
2023-10-26	D2	SCREEN ROOM SRs	
2024-08-20	D8	REDLINES	MI
2025-08-06	D9	UPDATE kA RATING	DM
2025-11-25	D10	CUSTOMER REDLINES	MI

PROJECT REVISION:

D10 - AS INSTALLED
2025-11-25

NOTES:

THIS DRAWING IS PROPERTY OF POWERON CONTROL SYSTEM LTD. THIS DRAWING IS TO BE USED ONLY FOR THE PURPOSE FOR WHICH IT IS INTENDED. IN ACCEPTING THIS DRAWING, YOU AGREE THAT THE INFORMATION CONTAINED HEREIN WILL NOT BE COPIED, REPRODUCED, DISPLAYED OR PASSED ON TO A THIRD PARTY WITHOUT POWERON CONTROL SYSTEM LTD'S WRITTEN CONSENT.

PROJECT:
H2FLOW
EUREKA STP CONTAINERIZED MBBR

TITLE:
MAIN CONTROL ENCLOSURE (MCE)
INTERIOR PANEL

DESIGNED BY:	P. CHAM	DATE:	2022-04-18
CHECKED BY:	P. CHAM	DWG #:	800
PROJ #:	2633	SHEET:	800

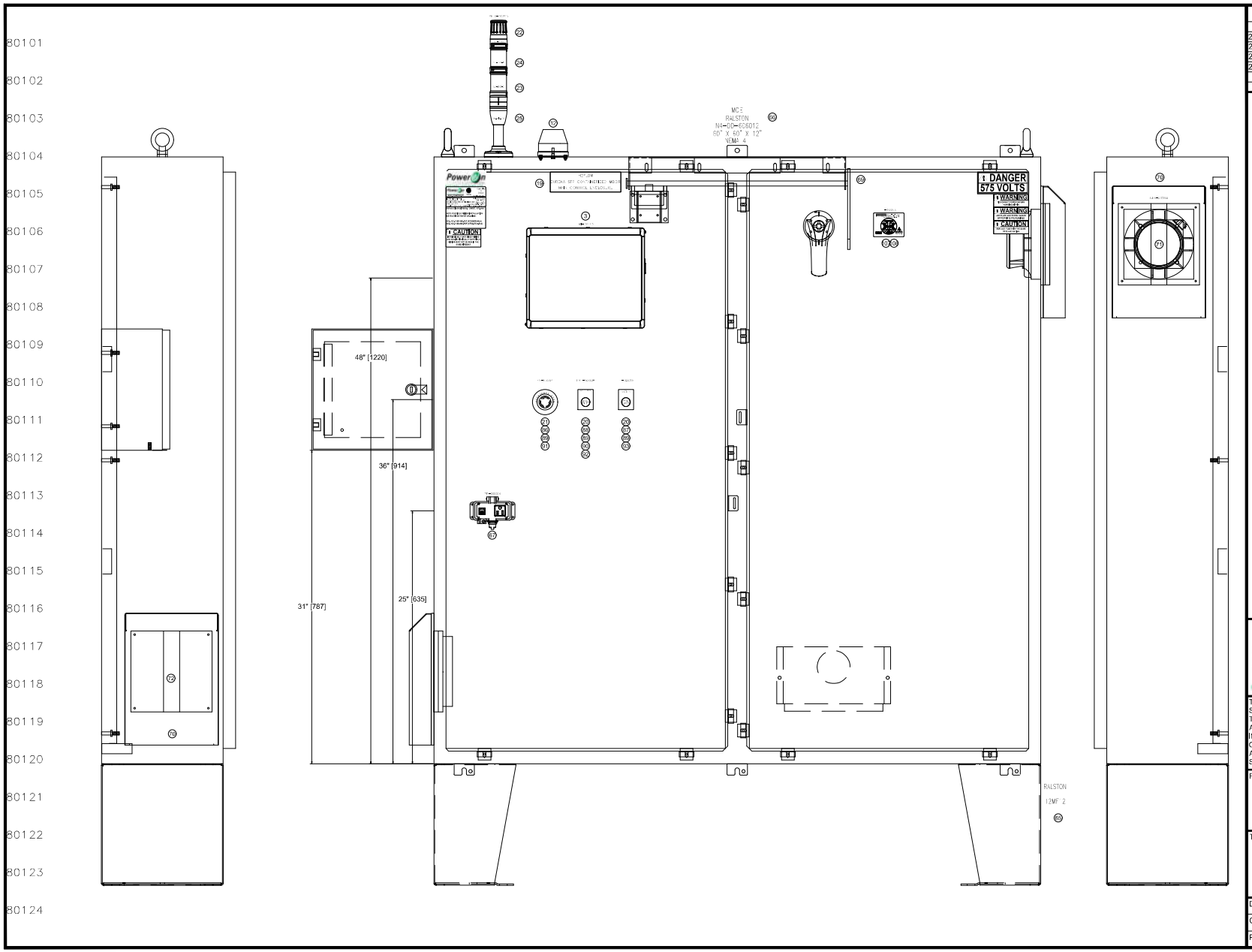

DRAWING REVISION TABLE

DATE	REV	DESCRIPTION	BY
2023-10-26	D2	SCREEN ROOM SRs	
2024-08-20	D8	REDLINES	MI
2025-08-06	D9	UPDATE kA RATING	DM
2025-11-25	D10	CUSTOMER REDLINES	MI

PROJECT REVISION:

D10 - AS INSTALLED
2025-11-25

NOTES:

PowerOn CONTROL SYSTEMS LTD.

THIS DRAWING IS PROPERTY OF POWERON CONTROL SYSTEM LTD. THIS DRAWING IS TO BE USED ONLY FOR THE PURPOSE FOR WHICH IT IS INTENDED. IN ACCEPTING THIS DRAWING, YOU AGREE THAT THE INFORMATION CONTAINED HEREIN WILL NOT BE COPIED, REPRODUCED, DISPLAYED OR PASSED ON TO A THIRD PARTY WITHOUT POWERON CONTROL SYSTEM LTD'S WRITTEN CONSENT.

PROJECT:
H2FLOW
EUREKA STP CONTAINERIZED MBBR

TITLE:
MAIN CONTROL ENCLOSURE (MCE)
EXTERIOR PANEL

DESIGNED BY:	P. CHAM	DATE:	2022-04-18
CHECKED BY:	P. CHAM	DWG #:	801
PROJ #:	2633	SHEET:	801

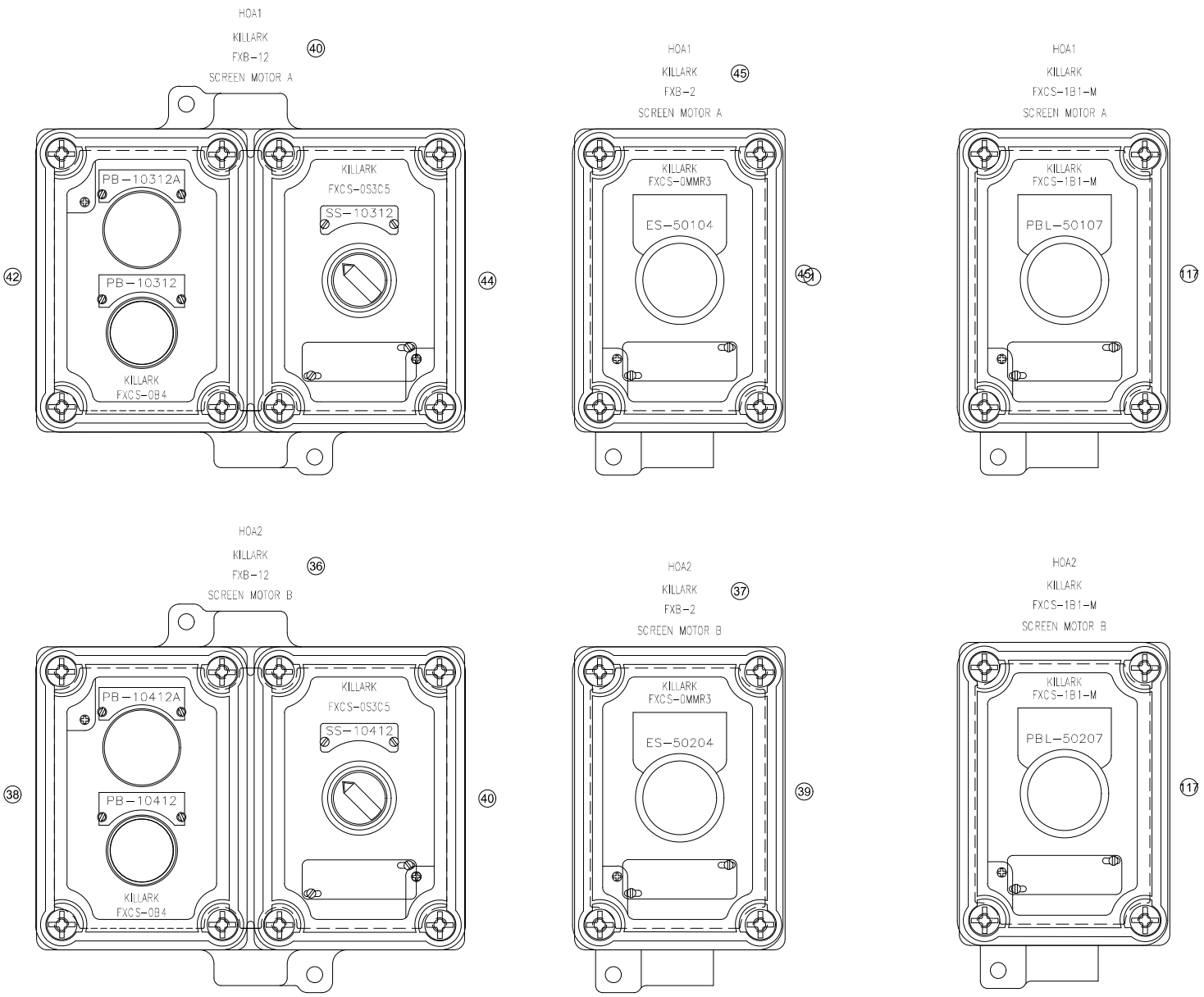

DRAWING REVISION TABLE

DATE	REV	DESCRIPTION	BY
2023-10-26	D2	SCREEN ROOM SRs	
2024-08-20	D8	REDLINES	MI
2025-08-06	D9	UPDATE kA RATING	DM
2025-11-25	D10	CUSTOMER REDLINES	MI

PROJECT REVISION:

D10 - AS INSTALLED
2025-11-25

NOTES:

Poweron CONTROL SYSTEMS LTD.

THIS DRAWING IS PROPERTY OF POWERON CONTROL SYSTEM LTD. THIS DRAWING IS TO BE USED ONLY FOR THE PURPOSE FOR WHICH IT IS INTENDED. IN ACCEPTING THIS DRAWING, YOU AGREE THAT THE INFORMATION CONTAINED HEREIN WILL NOT BE COPIED, REPRODUCED, DISPLAYED OR PASSED ON TO A THIRD PARTY WITHOUT POWERON CONTROL SYSTEM LTD'S WRITTEN CONSENT.

PROJECT:
H2FLOW
EUREKA STP CONTAINERIZED MBBR

TITLE:
SCREEN MOTOR A & B
OPERATOR STATION LAYOUT

DESIGNED BY: P. CHAM		DATE:	2022-04-18
CHECKED BY: P. CHAM		DWG #:	805
PROJ #:	2633	SHEET:	805

JB
RALSTON
V-GP-121206
INTRINSIC SAFE BARRIERS (68)
JUNCTION BOX
12" X 12" X 6"
NEMA 4

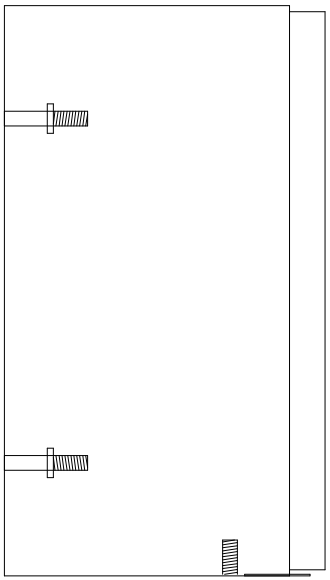

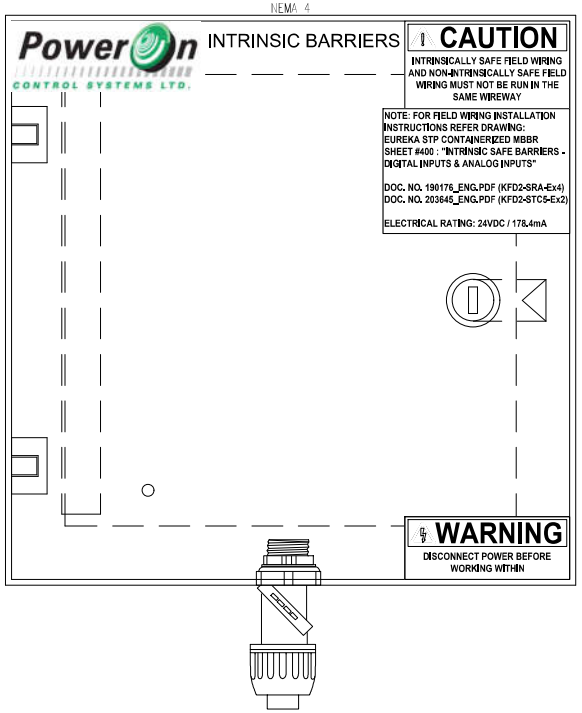

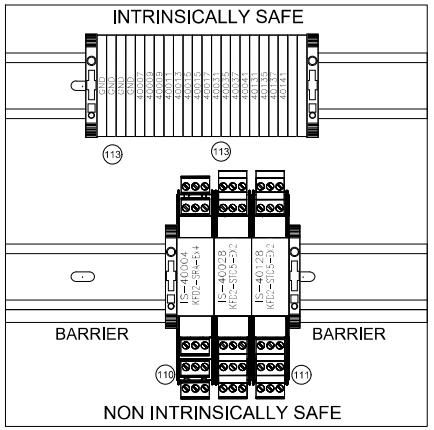

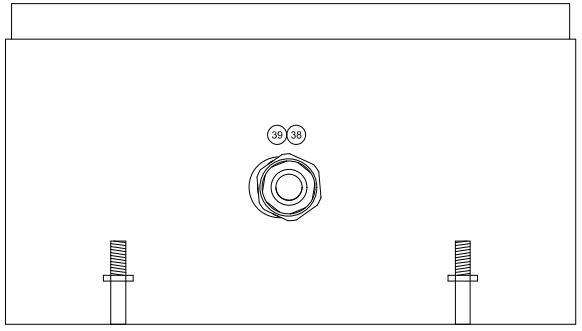

DRAWING REVISION TABLE

DATE	REV	DESCRIPTION	BY
2023-10-26	D2	SCREEN ROOM SRs	
2024-08-20	D8	REDLINES	MI
2025-08-06	D9	UPDATE kA RATING	DM
2025-11-25	D10	CUSTOMER REDLINES	MI

PROJECT REVISION:

D10 - AS INSTALLED
2025-11-25

NOTES:

Power On
CONTROL SYSTEMS LTD.

THIS DRAWING IS PROPERTY OF POWERON CONTROL SYSTEM LTD. THIS DRAWING IS TO BE USED ONLY FOR THE PURPOSE FOR WHICH IT IS INTENDED. IN ACCEPTING THIS DRAWING, YOU AGREE THAT THE INFORMATION CONTAINED HEREIN WILL NOT BE COPIED, REPRODUCED, DISPLAYED OR PASSED ON TO A THIRD PARTY WITHOUT POWERON CONTROL SYSTEM LTD'S WRITTEN CONSENT.

PROJECT:
H2FLOW
EUREKA STP CONTAINERIZED MBBR

TITLE:
INTRINSIC SAFE BARRIERS
JUNCTION BOX LAYOUT

DESIGNED BY:	P. CHAM	DATE:	2022-04-18
CHECKED BY:	P. CHAM	DWG #:	810
PROJ #:	2633	SHEET:	810

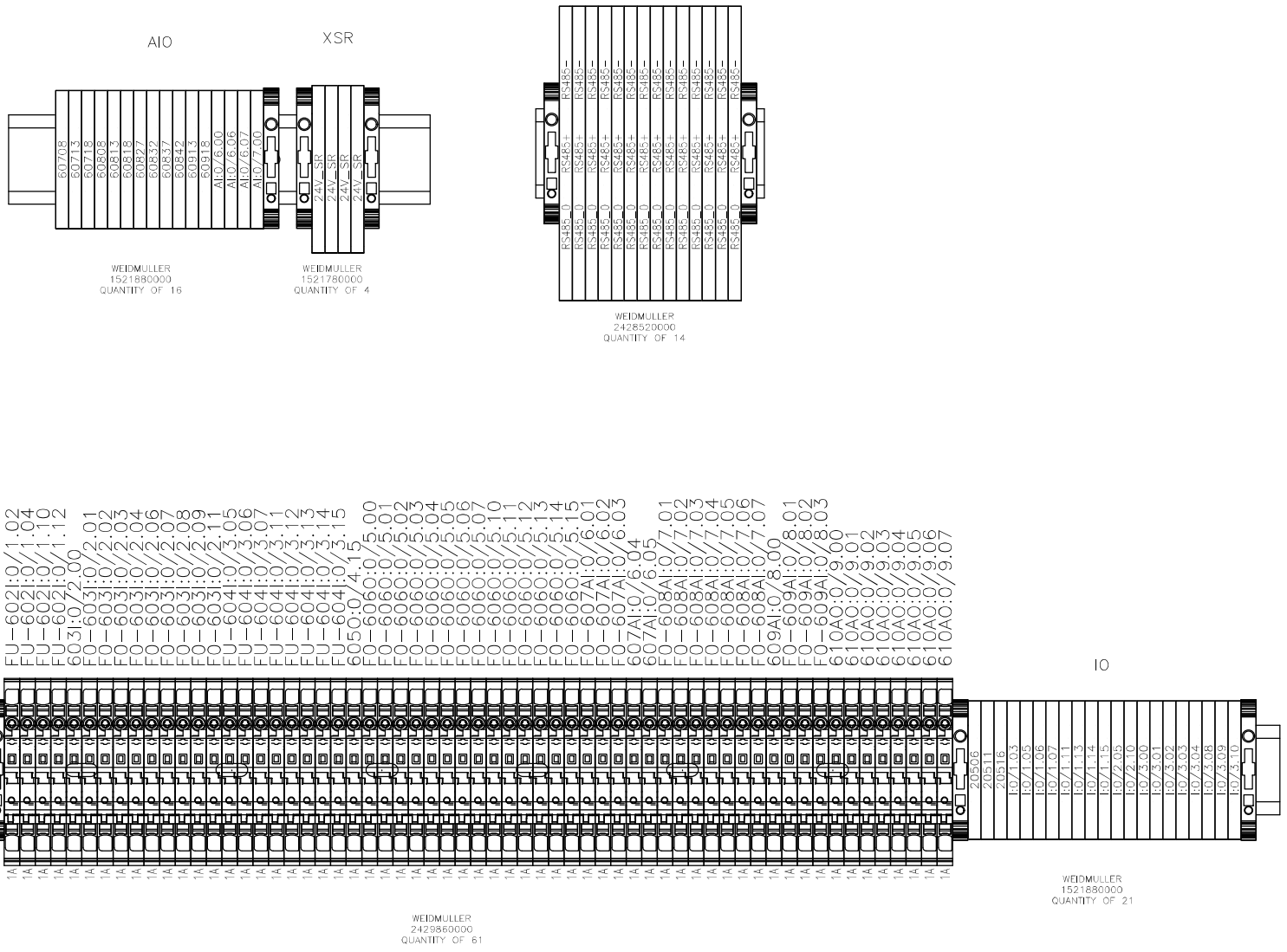

DRAWING REVISION TABLE

DATE	REV	DESCRIPTION	BY
2023-10-26	D2	SCREEN ROOM SRs	
2024-08-20	D8	REDLINES	MI
2025-08-06	D9	UPDATE kA RATING	DM
2025-11-25	D10	CUSTOMER REDLINES	MI

PROJECT REVISION:

D10 - AS INSTALLED

2025-11-25

NOTES:

Power On CONTROL SYSTEMS LTD.

THIS DRAWING IS PROPERTY OF POWERON CONTROL SYSTEM LTD. THIS DRAWING IS TO BE USED ONLY FOR THE PURPOSE FOR WHICH IT IS INTENDED. IN ACCEPTING THIS DRAWING, YOU AGREE THAT THE INFORMATION CONTAINED HEREIN WILL NOT BE COPIED, REPRODUCED, DISPLAYED OR PASSED ON TO A THIRD PARTY WITHOUT POWERON CONTROL SYSTEM LTD'S WRITTEN CONSENT.

PROJECT:

H2FLOW

EUREKA STP CONTAINERIZED MBBR

TITLE:

TERMINAL LIST

MAIN CONTROL ENCLOSURE (MCE)

DESIGNED BY: P. CHAM	DATE: 2022-04-18
CHECKED BY: P. CHAM	DWG #: 850
PROJ #: 2633	SHEET: 850

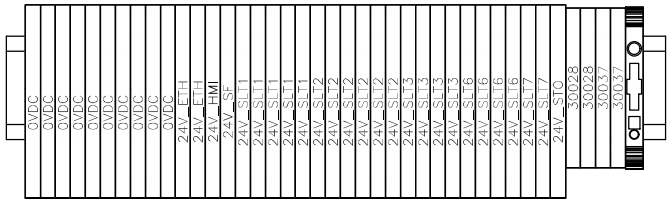

WEIDMULLER
1521780000
QUANTITY OF 36

WEIDMULLER
1521880000
QUANTITY OF 4

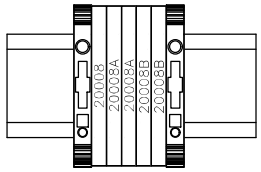

WEIDMULLER
1521850000
QUANTITY OF 5

SR

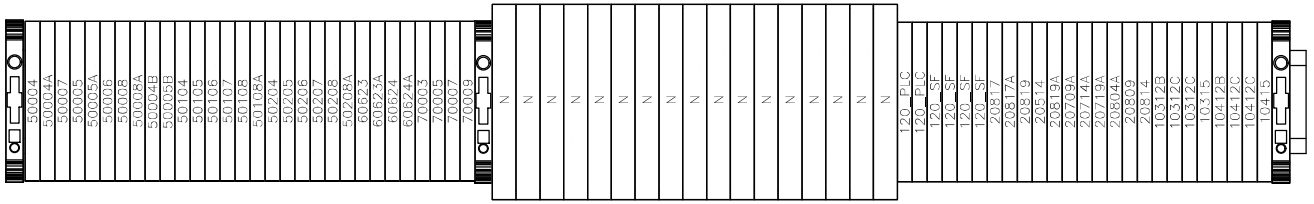

WEIDMULLER
1521880000
QUANTITY OF 30

WEIDMULLER
1992110000
QUANTITY OF 17

WEIDMULLER
1521850000
QUANTITY OF 25

DRAWING REVISION TABLE

DATE	REV	DESCRIPTION	BY
2023-10-26	D2	SCREEN ROOM SRs	
2024-08-20	D8	REDLINES	MI
2025-08-06	D9	UPDATE kA RATING	DM
2025-11-25	D10	CUSTOMER REDLINES	MI

PROJECT REVISION:

D10 - AS INSTALLED
2025-11-25

NOTES:

THIS DRAWING IS PROPERTY OF POWERON CONTROL SYSTEM LTD. THIS DRAWING IS TO BE USED ONLY FOR THE PURPOSE FOR WHICH IT IS INTENDED. IN ACCEPTING THIS DRAWING, YOU AGREE THAT THE INFORMATION CONTAINED HEREIN WILL NOT BE COPIED, REPRODUCED, DISPLAYED OR PASSED ON TO A THIRD PARTY WITHOUT POWERON CONTROL SYSTEM LTD'S WRITTEN CONSENT.

PROJECT:
H2FLOW
EUREKA STP CONTAINERIZED MBBR

TITLE:
TERMINAL LIST
MAIN CONTROL ENCLOSURE (MCE)

DESIGNED BY: P. CHAM	DATE: 2022-04-18
CHECKED BY: P. CHAM	DWG #: 850
PROJ #: 2633	SHEET: 850

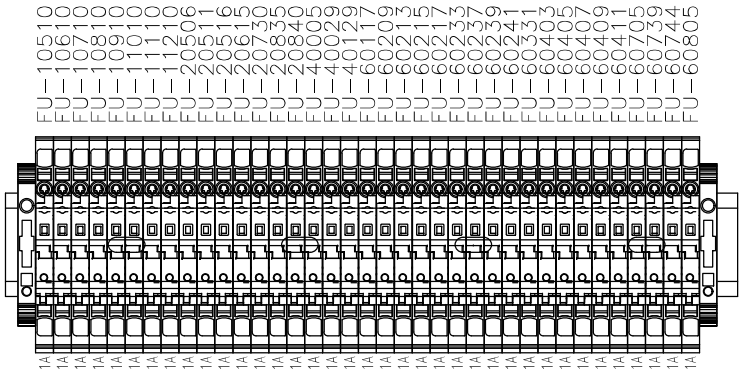

WEIDMULLER
2429860000
FUSED TERMINAL
QUANTITY OF 37

DRAWING REVISION TABLE

DATE	REV	DESCRIPTION	BY
2023-10-26	D2	SCREEN ROOM SRs	
2024-08-20	D8	REDLINES	MI
2025-08-06	D9	UPDATE kA RATING	DM
2025-11-25	D10	CUSTOMER REDLINES	MI

PROJECT REVISION:

D10 - AS INSTALLED
2025-11-25

NOTES:

THIS DRAWING IS PROPERTY OF POWERON CONTROL SYSTEM LTD. THIS DRAWING IS TO BE USED ONLY FOR THE PURPOSE FOR WHICH IT IS INTENDED. IN ACCEPTING THIS DRAWING, YOU AGREE THAT THE INFORMATION CONTAINED HEREIN WILL NOT BE COPIED, REPRODUCED, DISPLAYED OR PASSED ON TO A THIRD PARTY WITHOUT POWERON CONTROL SYSTEM LTD'S WRITTEN CONSENT.

PROJECT:
H2FLOW
EUREKA STP CONTAINERIZED MBBR

TITLE:
TERMINAL LIST
MAIN CONTROL ENCLOSURE (MCE)

DESIGNED BY: P. CHAM	DATE: 2022-04-18
CHECKED BY: P. CHAM	DWG #: 850
PROJ #: 2633	SHEET: 850

Bill of Material - MAIN CONTROL ENCLOSURE

ITEMS	QTY	MFG	CATALOG	DESCRIPTION
2	2	ALLEN BRADLEY	1321-3R4-C	
3	1	ALLEN-BRADLEY	2711P-T10C21D8S	PANELVIEW PLUS 7 STANDARD TERMINAL, TOUCH SCREEN, 10.4 INCHES, TFT COLOR, SINGLE ETHERNET, 24V DC, WINDOWS CE OS LICENSE, STANDARD MODEL, 800 X 600...
4	3	ALLEN-BRADLEY	5069-IB16	5069 COMPACT I/O 16 CHANNEL 24V DC SINK INPUT MODULE
5	2	ALLEN-BRADLEY	5069-IF8	5069 COMPACT I/O 8 CHANNEL VOLTAGE/CURRENT ANALOG INPUT MODULE
6	1	ALLEN-BRADLEY	5069-IY4	5069 COMPACT I/O 4 CHANNEL UNIVERSAL VOLTAGE/CURRENT/RTD/TC ANALOG INPUT MODULE
7	1	ALLEN-BRADLEY	5069-L320ER	CONTROLLER, COMPACTLOGIX 5380, 2 MB, 16 I/OS, 40 ETHERNET/IP DEVICES
8	1	ALLEN-BRADLEY	5069-OF8	5069 COMPACT I/O 8 CHANNEL VOLTAGE/CURRENT ANALOG OUTPUT MODULE
9	2	ALLEN-BRADLEY	5069-OW16	5069 COMPACT I/O 16 CHANNELS NON ISOLATED NORMALLY OPEN RELAY OUTPUT MODULE
10	9	ALLEN-BRADLEY	5069-RTB18-SCREW	5069 COMPACT I/O 18 PINS SCREW TYPE TERMINAL BLOCK KIT
11	1	ALLEN-BRADLEY	5069-RTB64-SCREW	5069 COMPACT I/O POWER TERMINAL RTB KIT FOR BOTH 4 AND 6 PIN SCREW TYPE
12	1	BINGFU	4G LTE ANTENNA	BINGFU 4G LTE OUTDOOR FIXED BRACKET WALL MOUNT WATERPROOF ANTENNA,5DBI SMA MALE ANTENNA FOR VERIZON AT&T T-MOBILE SPRINT 4G LTE ROUTER GATEWAY MODEM M
13	1	BUSSMANN	BB3P100M57	THREE PHASE BUS BAR, 100 AMP, 57 POLES, W/O END CAPS
14	1	BUSSMANN	CHCC2DU	FUSE HOLDER WITHOUT INDICATION CC-TYPE, 2 POLE, 600V, 30A
15	16	BUSSMANN	CHCC3DU	FUSE HOLDER WITHOUT INDICATION CC-TYPE, 3 POLE, 600V, 30A
16	2	BUSSMANN	ECAPMP	BUS END CAP - ONE SIDE (3 POLE BUSBAR)
17	3	BUSSMANN	LPJ-50SP	TYPE J FUSE - 50A - TIME DELAY - LOW PEAK
18	6	BUSSMANN	PWR35MM	FEEDER TERMINAL, FOR 3 PHASE BUSBAR
19	1	DIGITAL MARKINGS	LAMACOID 2" X 7"	CUSTOM LAMACOID 2" X 7" (H X W) LAMACOID WITH ADHESIVE BACKING. BLACK WITH WHITE TEXT
20	2	DIGITAL MARKINGS	LAMACOID-22MM	TEXT = "XXXXX". LAMACOID FOR STANDARD 22MM PUSH BUTTON OR LIGHT
21	1	DIGITAL MARKINGS	LAMACOID-ESTOP	"EMERGENCY STOP" LAMACOID - FOR 22MM E-STOP BUTTON - 2 1/2" DIAMETER - YELLOW WITH BLACK TEXT
22	1	EATON	SL4-AP120	MODULE, ACOUSTIC, CONTINUOUS, PULSE, 80DB, 4KHZ, 120VAC, 21MA, IP66, NEMA 4, NEMA 4X, NEMA 13
23	1	EATON	SL4-L120-G	MODULE, SL4 SIGNAL TOWERS, GREEN, CONTINUOUS, IP66, NEMA 4, NEMA 4X, NEMA 13, 40MM DIA.
24	1	EATON	SL4-L120-R	MODULE, SL4 SIGNAL TOWERS, RED, CONTINUOUS, IP66, NEMA 4, NEMA 4X, NEMA 13, 40MM DIA.
25	1	EATON	SL4-PIB-100	BASE MODULE;100-MM ALUMINUM TUBE AND FOOT
26	1	EWON	FLB3205	4G NA EXTENSION CARD (AT&T, T-MOBILE, BELL, ROGERS, ETC.),FLEXY EXTENSION
27	1	EWON	FLEXY205	EWON FLEXY 205 IIOT GATEWAY & REMOTE ACCESS M2M ROUTER BASE UNIT, BUILT-IN 4-PORT CONFIGURABLE 10/100 LAN/WAN ETHERNET SWITCH, 2 OPEN SLOTS FOR FLE...
28	12	FERRAZ SHAWMUT	GDL1	1A - FUSE - GDL CLASS - 1/4" X 1-1/4" - TIME DELAY - 250V
29	14	FERRAZ SHAWMUT	GDL2	2A - FUSE - GDL CLASS - 1/4" X 1-1/4" - TIME DELAY - 250V
30	4	FERRAZ SHAWMUT	GDL3	3A - FUSE - GDL CLASS - 1/4" X 1-1/4" - TIME DELAY - 250V
31	2	FERRAZ SHAWMUT	GDL4	4A - FUSE - GDL CLASS - 1/4" X 1-1/4" - TIME DELAY - 250V
32	2	FERRAZ SHAWMUT	GDL5	5A - FUSE - GDL CLASS - 1/4" X 1-1/4" - TIME DELAY - 250V
33	2	FERRAZ SHAWMUT	GDL6	6A - FUSE - GDL CLASS - 1/4" X 1-1/4" - TIME DELAY - 250V
34	1	GRACE ENGINEERED PROD...	R-3W-L	VOLTAGE INDICATOR WARNING LABEL
35	1	GRACE ENGINEERED PRODUCT	R-3W	GRACE POWER MONITOR (ENCLOSURE MOUNT) PHASE DISPLAY ..
36	1	HAMMOND	SP3000ACP	TRANSFORMER - 3KVA - SINGLE PHASE - OPEN TYPE - 600X480 PRIMARY - 120 X 240 SECONDARY
37	2	HAMMOND	SPFG1	TRANSFORMER FINGER GUARD, FINGER GUARDS, 1 PER SIDE
46	3	MERSEN	ATDR-1	1A - FUSE - CC-CLASS - TIME DELAY - 600V
47	6	MERSEN	ATDR-10	10A - FUSE - CC-CLASS - TIME DELAY - 600V
48	36	MERSEN	ATDR-6	6A - FUSE - CC-CLASS - TIME DELAY - 600V
49	2	MERSEN	ATDR-7-1/2	7.5A - FUSE - CC-CLASS - TIME DELAY - 600V
50	3	MERSEN	ATDR-8	8A - FUSE - CC-CLASS - TIME DELAY - 600V
51	1	MURR	58811	XELITY 6TX UNMANAGED SWITCH 6 PORT 100MBIT
52	1	MURR	85495	MB REDUNDANCY BASIC IN: 24VDC/2X20ADC OUT: 24V/20-40ADC
53	4	PANDUIT	C1.5LG6	DUCT COVER, 1.5 W X 6" LENGTH, PVC, LIGHT GRAY
54	4	PANDUIT	C1LG6	DUCT COVER, 1 W X 6" LENGTH, PVC, LIGHT GRAY

DRAWING REVISION TABLE

DATE	REV	DESCRIPTION	BY
2023-10-26	D2	SCREEN ROOM SRs	
2024-08-20	D8	REDLINES	MI
2025-08-06	D9	UPDATE kA RATING	DM
2025-11-25	D10	CUSTOMER REDLINES	MI

PROJECT REVISION:

D10 - AS INSTALLED
2025-11-25

NOTES:

Poweron CONTROL SYSTEMS LTD.

THIS DRAWING IS PROPERTY OF POWERON CONTROL SYSTEM LTD. THIS DRAWING IS TO BE USED ONLY FOR THE PURPOSE FOR WHICH IT IS INTENDED. IN ACCEPTING THIS DRAWING, YOU AGREE THAT THE INFORMATION CONTAINED HEREIN WILL NOT BE COPIED, REPRODUCED, DISPLAYED OR PASSED ON TO A THIRD PARTY WITHOUT POWERON CONTROL SYSTEM LTD'S WRITTEN CONSENT.

PROJECT:
H2FLOW
EUREKA STP CONTAINERIZED MBBR

TITLE:
BILL OF MATERIALS
MAIN CONTROL ENCLOSURE (MCE)

DESIGNED BY: P. CHAM		DATE: 2022-04-18	
CHECKED BY: P. CHAM		DWG #: 870	
PROJ #: 2633		SHEET: 870	

ITEMS	QTY	MFG	CATALOG	DESCRIPTION
55	5	PANDUIT	C2LG6	DUCT COVER, 2 W X 6" LENGTH, PVC, LIGHT GRAY
56	2	PANDUIT	C3LG6	DUCT COVER, 3 W X 6" LENGTH, PVC, LIGHT GRAY
57	4	PANDUIT	F1.5X3LG6	PANDUCT TYPE F DUCT, PVC, 1.5"X3"X6", LIGHT GRAY
58	4	PANDUIT	F1X3LG6	PANDUCT TYPE F DUCT, PVC, 1"X3"X6", LIGHT GRAY
59	5	PANDUIT	F2X3LG6	PANDUCT TYPE F DUCT, PVC, 2"X3"X6", LIGHT GRAY
60	2	PANDUIT	F3X3LG6	PANDUCT TYPE F DUCT, PVC, 3"X3"X6", LIGHT GRAY
63	3	PHOENIX CONTACT	2866323	PRIMARY-SWITCHED TRIO POWER POWER SUPPLY FOR DIN RAIL MOUNTING, INPUT: 1-PHASE, OUTPUT: 24 V DC/10 A
64	1	PROSOFT	PLX31-EIP-MBS	ETHERNET/IP™ TO MODBUS® SERIAL COMMUNICATION GATEWAY
65	1	RALSTON	12MF12	MOUNTING FEET KIT FOR N12-DD ENCLOSURE -12" DEEP, 12" HIGH
66	1	RALSTON	N4-DD-606012	ENCLOSURE - 60"H X 60"W X 12"DP - FREE STANDING - DOUBLE DOOR (CLAMP TO CLOSE) - NEMA 4 - CARBON STEEL - ANSI 61 GREY
67	1	RALSTON	P-R2-F3R0	PANEL INTERFACE CONNECTOR WITH CATEGORY 5E RJ45; PANEL MOUNT HOUSING; UL TYPE 4; SIMPLEX OUTLET; NO CIRCUIT BREAKER
69	1	RALSTON	Z-5012	INTERLOCK KIT ASSEMBLY
70	2	RITTAL	3239085	HOSE-PROOF HOOD, FOR SK 3239, WHD: 233 X 330 X 55 MM, CARBON STEEL
71	1	RITTAL	3239110	SK FAN AND FILTER UNITS TOPTHERM, 105/120 M³/H, 115 V, 1~, 50/60 HZ, WHD: 204 X 204 X 24 MM
72	1	RITTAL	3239200	SK OUTLET FILTER, STANDARD, WHD: 204 X 204 X 24 MM
73	8	SCHNEIDER	ATV320U07S6C	VARIABLE SPEED DRIVE, ALTIVAR MACHINE ATV320, 0.75 KW, 525...600 V, 3 PHASES, COMPACT
74	2	SCHNEIDER	ATV320U15S6C	VARIABLE SPEED DRIVE, ALTIVAR MACHINE ATV320, 1.5 KW, 525...600 V, 3 PHASES, COMPACT
75	2	SCHNEIDER	ATV320U22S6C	VARIABLE SPEED DRIVE, ATV320, 2.2 KW, 3 HP, 525...600 V, 3 PHASES, COMPACT
76	1	SCHNEIDER	GS2AE21	SHAFT EXTENSION, TESYS GS, LENGTH 400MM, CROSS SECTION 10 X 10 MM, FOR SWITCHES 50-400 A
77	1	SCHNEIDER	GS2AEH12	TESYS GS - DISCONNECT SWITCH SHAFT GUIDE
78	1	SCHNEIDER	GS2AH440	EXTERNAL ROTARY HANDLE, TESYS GS, RED HANDLE, FRONT MOUNTING, 2 POSITIONS I-O, NEMA 4-4X, FOR GS 30-400A U
79	1	SCHNEIDER	GS2GU3N	TESYS GS - SWITCH-DISCONNECTOR-FUSE - 3 P - UL - 60 A- FUSE SIZE J
80	1	SCHNEIDER	NSYCCOTHO	CLIMASYS CC - SIMPLE THERMOSTAT 250V - RANGE OF TEMPERATURE 0…60°C - NO - °C
81	2	SCHNEIDER	RGZS08	HARMONY, BUS JUMPER 8 POLES, FOR RGZE SCREW SOCKETS, FOR INPUTS (A1, A2)
82	30	SCHNEIDER	RSB1A120F7	HARMONY, INTERFACE PLUG-IN RELAY, 12 A, 1 CO, 120 V AC
83	30	SCHNEIDER	RSZE1S35M	HARMONY, SOCKET, FOR RSB1A RELAYS, 12 A, SCREW CONNECTORS, SEPARATE CONTACT
84	3	SCHNEIDER	SSL1D03BD	SOLID STATE RELAY, PLUG-IN, INPUT 15-30 V DC, OUTPUT 1-24 V DC, 3.5A
85	3	SCHNEIDER	SSLZVA1	HARMONY, SOCKET EQUIPPED WITH LED AND PROTECTION CIRCUIT, FOR SSL RELAYS, SCREW CONNECTORS, 5/ 24 V DC
86	1	SCHNEIDER	ZB4BS844	HARMONY, 22MM PUSH BUTTON, EMERGENCY STOP HEAD, TRIGGER AND LATCHING TURN RELEASE, RED, 40 MM MUSHROOM, UNMARKED
87	1	SCHNEIDER	ZB4BV033	PILOT LIGHT HEAD - 22MM - GREEN - FOR LED - DIE CAST CHROME PLATED
88	1	SCHNEIDER	ZB4BW31	PUSH BUTTON HEAD - 22MM - WHITE - ILLUMINATED - MOMENTARY - FLUSH TYPE - DIE CAST CHROME PLATED - BULB/LED
89	3	SCHNEIDER	ZB4BZ009	BODY/MOUNTING COLLAR - 22MM - DIE CAST CHROME PLATED - FOR CONTACTS OR LIGHT MODULES
90	1	SCHNEIDER	ZBE101	N/O CONTACT BLOCK - FOR 22MM PUSH BUTTON
91	2	SCHNEIDER	ZBE102	N/C CONTACT BLOCK - FOR 22MM PUSH BUTTON
92	1	SCHNEIDER	ZBVB1	LED MODULE - 24V - WHITE - PROTECTED - FOR PUSH BUTTON OR PILOT LIGHT
93	1	SCHNEIDER	ZBVB3	LED MODULE - 24V - GREEN - PROTECTED - FOR PUSH BUTTON OR PILOT LIGHT - NEW PART # ZBVB1
94	4	SIEMENS	3RA1921-1DA00	LINK MODULE ELECTRICAL AND MECHANICAL FOR 3RV2.1/3RV2.2 AND 3RT2.1 AC AND DC OPERATION
95	2	SIEMENS	3RH2911-1HA22	AUXILIARY SWITCH ON THE FRONT, 2 NO + 2 NC CURRENT PATH 1 NO, 1 NC, 1 NC, 1 NO FOR 3RH AND 3RT SCREW TERMINAL .3/.4, .1/.2, .1/.2, .3/.4
96	4	SIEMENS	3RT2017-1AK61	POWER CONTACTOR, AC-3 12 A, 5.5 KW / 400 V 1 NO, 110 V AC, 50 HZ, 120 V 60 HZ, 3-POLE, SIZE S00 SCREW TERMINAL
97	1	SIEMENS	3RT2018-1AK62	CONTACTOR, AC-3, 7.5 KW / 400 V, 1 NC, 110 V AC, 50 HZ, 120 V, 60 HZ, 3-POLE, SIZE S00 SCREW TERMINAL
98	2	SIEMENS	3RV2011-0HA10	CIRCUIT BREAKER SIZE S00 FOR MOTOR PROTECTION, CLASS 10 A-RELEASE 0.55...0.8 A N-RELEASE 10 A SCREW TERMINAL STANDARD SWITCHING CAPACITY
99	2	SIEMENS	3RV2011-1BA10	CIRCUIT BREAKER SIZE S00 FOR MOTOR PROTECTION, CLASS 10 A-RELEASE 1.4...2 A N-RELEASE 26 A SCREW TERMINAL STANDARD SWITCHING CAPACITY
100	4	SIEMENS	3RV2901-1E	AUXILIARY SWITCH TRANSVERSE 1 NO+1 NC SCREW TERMINAL FOR CIRCUIT BREAKER 3RV2
101	1	SIEMENS	3RV2917-1E	3-PHASE BUSBAR WITH INFEED RIGHT FOR 2 CIRCUIT BREAKERS SIZE S00 AND S0
102	1	SIEMENS	3RV2917-4A	3-PHASE BUSBAR INCLUDING EXTENSION CONNECTOR FOR 2 CIRCUIT BREAKERS SIZE S00 AND S0

DRAWING REVISION TABLE

DATE	REV	DESCRIPTION	BY
2023-10-26	D2	SCREEN ROOM SRs	
2024-08-20	D8	REDLINES	MI
2025-08-06	D9	UPDATE kA RATING	DM
2025-11-25	D10	CUSTOMER REDLINES	MI

PROJECT REVISION:

D10 - AS INSTALLED
2025-11-25

NOTES:

Poweron CONTROL SYSTEMS LTD.

THIS DRAWING IS PROPERTY OF POWERON CONTROL SYSTEM LTD. THIS DRAWING IS TO BE USED ONLY FOR THE PURPOSE FOR WHICH IT IS INTENDED. IN ACCEPTING THIS DRAWING, YOU AGREE THAT THE INFORMATION CONTAINED HEREIN WILL NOT BE COPIED, REPRODUCED, DISPLAYED OR PASSED ON TO A THIRD PARTY WITHOUT POWERON CONTROL SYSTEM LTD'S WRITTEN CONSENT.

PROJECT:
H2FLOW
EUREKA STP CONTAINERIZED MBBR

TITLE:
BILL OF MATERIALS
MAIN CONTROL ENCLOSURE (MCE)

DESIGNED BY: P. CHAM		DATE: 2022-04-18	
CHECKED BY: P. CHAM		DWG #: 871	
PROJ #: 2633		SHEET: 871	

ITEMS	QTY	MFG	CATALOG	DESCRIPTION
103	4	SIEMENS	3RV2917-5CA00	CABLE CONNECTOR FOR CIRCUIT BREAKER SIZE S00 WITH SCREW TERMINAL
104	1	SIEMENS	3SK1111-1AW20	SIRIUS SAFETY RELAY BASIC UNIT STANDARD SERIES RELAY ENABLING CIRCUITS 3 NO CONTACTS PLUS RELAY SIGNALING CIRCUIT 1 NC CONTACT US = 110 - 240 V AC/...
106	8	TCI	KDRMA45L1	KDR, 600V, 1 HP, 1.70 MOTOR AMPS, 2.1 MAX AMPS, 3 PHASE, OPEN, LINE INDUCTOR, 3% IMPEDANCE, UL LISTED
107	2	TCI	KDRMA47L1	KDR, 600V, 2 HP, 2.70 MOTOR AMPS, 3.2 MAX AMPS, 3 PHASE, OPEN, LINE INDUCTOR, 3% IMPEDANCE, UL LISTED
108	1	TECHSPAN	LA2	SINGLE 14-2, ONE 17/64 HOLE, ALUMINUM SOLDERLESS LUG
109	6	TECHSPAN	NC-425	COPPER NEUTRAL BARS, 14-4, 15 HOLES
110	2	WEIDMULLER	1521680000	PE TERMINAL, PUSH IN, 2.5 MM², GREEN/YELLOW
111	78	WEIDMULLER	1521780000	FEED-THROUGH TERMINAL, PUSH IN, 2.5MM², 800V, 24A, BLUE - 1 IN 2 OUT
112	45	WEIDMULLER	1521850000	FEED-THROUGH TERMINAL, PUSH IN, 2.5 MM², 800 V, 24 A, DARK BEIGE
113	151	WEIDMULLER	1521880000	FEED-THROUGH TERMINAL, PUSH IN, 2.5MM², 800V, 24A, BLUE
114	7	WEIDMULLER	1880410000	FUSE HOLDER W/ LED - TERMINAL TYPE - WSI 4/2 - FOR USE WITH 1/4X1-1/4 GLASS FUSES - 500V/15A RATING - 22 TO 10 AWG - BLACK
115	29	WEIDMULLER	1880430000	FUSE HOLDER - TERMINAL TYPE - WSI 4/2 - FOR USE WITH 1/4X1-1/4 GLASS FUSES - 500V/15A RATING - 22 TO 10 AWG - BLACK
116	4	WEIDMULLER	1880450000	END PLATE FOR FUSE HOLDER WAP WSI4/2
117	17	WEIDMULLER	1992110000	FEED-THROUGH TERMINAL, PUSH IN, 6 MM², 800 V, 41 A, DARK BEIGE
118	28	WEIDMULLER	2428520000	FEED-THROUGH TERMINAL, PUSH IN, 2.5 MM², 800 V, 22 A, BLUE
119	21	WEIDMULLER	2429860000	FUSE TERMINAL, PUSH IN, 4 MM², 400 V, 6.3 A, BLACK. TYPE AFS 4 2C BK.
120	3	WEIDMULLER	67603346	WE QB/WSI 4/2 10POLE (9MM) - JUMPER BAR
121	1	WEIDMULLER	7940126419	WE QB/WSI 4/2 10POLE (9MM) - JUMPER BAR
122	41	WEIDMULLER	9540000000	TERMINAL - END STOP - ZEW 35 - BEIGE
123	12	INFINITE	CAT5E-10BL	ETHERNET CABLE - 10 FT - CAT5E - BLUE - RJ45 - MOLDED BOOTS

DRAWING REVISION TABLE

DATE	REV	DESCRIPTION	BY
2023-10-26	D2	SCREEN ROOM SRs	
2024-08-20	D8	REDLINES	MI
2025-08-06	D9	UPDATE kA RATING	DM
2025-11-25	D10	CUSTOMER REDLINES	MI

PROJECT REVISION:

D10 - AS INSTALLED

2025-11-25

NOTES:

Poweron CONTROL SYSTEMS LTD.

THIS DRAWING IS PROPERTY OF POWERON CONTROL SYSTEM LTD. THIS DRAWING IS TO BE USED ONLY FOR THE PURPOSE FOR WHICH IT IS INTENDED. IN ACCEPTING THIS DRAWING, YOU AGREE THAT THE INFORMATION CONTAINED HEREIN WILL NOT BE COPIED, REPRODUCED, DISPLAYED OR PASSED ON TO A THIRD PARTY WITHOUT POWERON CONTROL SYSTEM LTD'S WRITTEN CONSENT.

PROJECT:

H2FLOW

EUREKA STP CONTAINERIZED MBBR

TITLE:

BILL OF MATERIALS
MAIN CONTROL ENCLOSURE (MCE)

DESIGNED BY: P. CHAM	DATE: 2022-04-18
CHECKED BY: P. CHAM	DWG #: 872
PROJ #: 2633	SHEET: 872

Bill of Material - SCREEN MOTOR A & B OPERATOR STATION (HOA1 & HOA2)

ITEMS	QTY	MFG	CATALOG	DESCRIPTION
1	2		ZBVB1	LED MODULE - 24V - WHITE - PROTECTED - FOR PUSH BUTTON OR PILOT LIGHT
40	2	KILLARK	FXB-12	SPLICE/DEVICE BOX, FEED THROUGH, (2) GANG, FACTORY SEALED, (2) 1IN FEMALE NPT CONDUIT ENTRIES, ALUMINUM
41	2	KILLARK	FXB-2	SPLICE/DEVICE BOX, DEAD END, (1) GANG, FACTORY SEALED, (1) 3/4IN FEMALE NPT CONDUIT ENTRIES, ALUMINUM
42	2	KILLARK	FXCS-0B4	CONTROL STATION COVER ASSEMBLY, HAZARDOUS LOCATION RATED, FACTORY SEALED, TWO PUSHBUTTONS, RED/GREEN, MOMENTARY, (1) N.O. AND (1) N.C. CONTACT(S), ...
43	2	KILLARK	FXCS-0MMR3	CONTROL STATION COVER ASSEMBLY, HAZARDOUS LOCATION RATED, FACTORY SEALED, SINGLE PUSHBUTTON, MUSHROOM, RED, PUSH-PULL, (1) N.O./(1) N.C. CONTACT(S)...
44	2	KILLARK	FXCS-0S3C5	CONTROL STATION COVER ASSEMBLY, HAZARDOUS LOCATION RATED, FACTORY SEALED, SINGLE SELECTOR SWITCH, KNOB, 3-POSITION, BLACK, MAINTAINED, (2) N.O./(2)...
45	4	KILLARK	FXCS-1B1-M	

DRAWING REVISION TABLE

DATE	REV	DESCRIPTION	BY
2023-10-26	D2	SCREEN ROOM SRs	
2024-08-20	D8	REDLINES	MI
2025-08-06	D9	UPDATE kA RATING	DM
2025-11-25	D10	CUSTOMER REDLINES	MI

PROJECT REVISION:

D10 - AS INSTALLED
2025-11-25

NOTES:

THIS DRAWING IS PROPERTY OF POWERON CONTROL SYSTEM LTD. THIS DRAWING IS TO BE USED ONLY FOR THE PURPOSE FOR WHICH IT IS INTENDED. IN ACCEPTING THIS DRAWING, YOU AGREE THAT THE INFORMATION CONTAINED HEREIN WILL NOT BE COPIED, REPRODUCED, DISPLAYED OR PASSED ON TO A THIRD PARTY WITHOUT POWERON CONTROL SYSTEM LTD'S WRITTEN CONSENT.

PROJECT:
H2FLOW
EUREKA STP CONTAINERIZED MBBR

TITLE:
BILL OF MATERIALS
SCREEN MOTOR A & B
OPERATOR STATION

DESIGNED BY:	P. CHAM	DATE:	2022-04-18
CHECKED BY:	P. CHAM	DWG #:	875
PROJ #:	2633	SHEET:	875

Bill of Material - INTRINSIC SAFE BARRIERS JUNCTION BOX (JB)

ITEMS	QTY	MFG	CATALOG	DESCRIPTION
38	1	HUBBELL	G1050	FLEXIBLE CONDUIT - GRAY - 1/2" NON-METALLIC - POLYTUFF - UL/CSA APPROVED
39	2	HUBBELL	PS0509NGY	LIQUIDTIGHT SYSTEM, SWIVELLOK® MULTI-POSITION MALE LIQUID TIGHT CONNECTOR, 1/2", NON-METALLIC, GRAY
61	1	PEPPERL+FUCHS	KFD2-SRA-EX4	SWITCH AMPLIFIER, 4-CHANNEL ISOLATED BARRIER, 24 V DC SUPPLY, DRY CONTACT OR NAMUR INPUTS, RELAY CONTACT OUTPUT, LINE FAULT DETECTION (LFD), REVERS...
62	2	PEPPERL+FUCHS	KFD2-STC5-EX2	SMART TRANSMITTER POWER SUPPLY, 2-CHANNEL ISOLATED BARRIER, 24 V DC SUPPLY, INPUT 2-WIRE AND 3-WIRE SMART TRANSMITTERS AND 2-WIRE SMART CURRENT SOU...
68	1	RALSTON	V-GP-121206	ENCLOSURE - 12"H X 12"W X 6"DP - CARBON STEEL - NEMA 4/12 - PAINTED ASA 61 GREY
110	4	WEIDMULLER	1521680000	PE TERMINAL, PUSH IN, 2.5 MM², GREEN/YELLOW
113	18	WEIDMULLER	1521880000	FEED-THROUGH TERMINAL, PUSH IN, 2.5MM², 800V, 24A, BLUE
122	4	WEIDMULLER	9540000000	TERMINAL - END STOP - ZEW 35 - BEIGE

DRAWING REVISION TABLE

DATE	REV	DESCRIPTION	BY
2023-10-26	D2	SCREEN ROOM SRs	
2024-08-20	D8	REDLINES	MI
2025-08-06	D9	UPDATE kA RATING	DM
2025-11-25	D10	CUSTOMER REDLINES	MI

PROJECT REVISION:

D10 - AS INSTALLED
2025-11-25

NOTES:

THIS DRAWING IS PROPERTY OF POWERON CONTROL SYSTEM LTD. THIS DRAWING IS TO BE USED ONLY FOR THE PURPOSE FOR WHICH IT IS INTENDED. IN ACCEPTING THIS DRAWING, YOU AGREE THAT THE INFORMATION CONTAINED HEREIN WILL NOT BE COPIED, REPRODUCED, DISPLAYED OR PASSED ON TO A THIRD PARTY WITHOUT POWERON CONTROL SYSTEM LTD'S WRITTEN CONSENT.

PROJECT:
H2FLOW
EUREKA STP CONTAINERIZED MBBR

TITLE:
BILL OF MATERIALS
INTRINSIC SAFE BARRIERS
JUNCTION BOX

DESIGNED BY:	P. CHAM	DATE:	2022-04-18
CHECKED BY:	P. CHAM	DWG #:	876
PROJ #:	2633	SHEET:	876

Section 5

Hazardous Location Documentation

Section 5.1

Procedure and Warning Labels

CAUTION FOR CONTAINER #1

H2S GAS & METHANE GAS MAY BE PRESENT.

DO NOT ENTER THIS AREA

WITHOUT FOLLOWING THE ENTRY PROCEDURE:

ENTRY PROCEDURE

1. THE EXHAUST FAN (FAN-02-33) MUST REMAIN **ON** BEFORE ENTRY.
   BEFORE ENTERING INTO CONTAINER#1, THE **'TIMER FOR FAN-02-33'** LOCATED IN CONTAINER #3 MUST BE ADJUSTED TO **ZERO SECONDS**.
2. DOOR MUST BE KEPT OPEN FOR VENTILATION.
3. BEFORE ENTERING, YOU MUST HAVE A VISUAL THAT THE FAN IS **ON** BEFORE ENTERING.
4. IF THE FAN TURNS OFF WHILE INSIDE, YOU MUST LEAVE THE ROOM IMMEDIATELY. (VERIFY IF STEP 2 HAS BEEN FOLLOWED)
5. PUT BACK THE TIMER TO ITS ORIGINAL SETTINGS AFTER EXITING.

ATTENTION POUR LE CONTENANT #1

GAZ H2S & GAZ MÉTHANE PEUVENT ÊTRE PRÉSENTS.

NE PAS ENTRER DANS CETTE ZONE

SANS SUIVRE LE PROCÉDURE D'ENTRÉE :

PROCEDURE D'ENTRE

1. LE VENTILATEUR D'ÉVACUATION (FAN-02-33) DOIT RESTER EN MARCHE AVANT L'ENTRÉE. AVANT D'ENTRER DANS LE CONTENEUR #1, LA « MINUTERIE POUR FAN-02-33 » SITUÉE DANS LE CONTENEUR #3 DOIT ÊTRE AJUSTÉE À ZÉRO SECONDE.
2. LA PORTE DOIT RESTER OUVERTE POUR LA VENTILATION.
3. AVANT D'ENTRER, VOUS DEVEZ AVOIR UN VISUEL QUE LE VENTILATEUR EST EN MARCHE AVANT D'ENTRER.
4. SI LE VENTILATEUR S'ÉTEINT À L'INTÉRIEUR, VOUS DEVEZ QUITTER LA PIÈCE IMMÉDIATEMENT. (VÉRIFIER SI L'ÉTAPE 2 A ÉTÉ SUIVIE)
5. REMETTRE LA MINUTERIE À SES RÉGLAGES D'ORIGINE APRÈS LA SORTIE.

CAUTION FOR CONTAINER #2

H2S GAS & METHANE GAS MAY BE PRESENT.

DO NOT ENTER THIS AREA

WITHOUT FOLLOWING THE ENTRY PROCEDURE:

ENTRY PROCEDURE

1. THE EXHAUST FAN (FAN-03-50) MUST REMAIN **ON** BEFORE ENTRY. BEFORE ENTERING INTO CONTAINER#1, THE **'TIMER FOR FAN-03-50'** LOCATED IN CONTAINER #3 MUST BE ADJUSTED TO **ZERO SECONDS**.
2. DOOR MUST BE KEPT OPEN FOR VENTILATION.
3. BEFORE ENTERING, YOU MUST HAVE A VISUAL THAT THE FAN IS **ON** BEFORE ENTERING.
4. IF THE FAN TURNS OFF WHILE INSIDE, YOU MUST LEAVE THE ROOM IMMEDIATELY. (VERIFY IF STEP 2 HAS BEEN FOLLOWED)
5. PUT BACK THE TIMER TO ITS ORIGINAL SETTINGS AFTER EXITING.

ATTENTION POUR LE CONTENANT #2

GAZ H2S & GAZ MÉTHANE PEUVENT ÊTRE PRÉSENTS.

NE PAS ENTRER DANS CETTE ZONE

SANS SUIVRE LE PROCÉDURE D'ENTRÉE :

PROCEDURE D'ENTRE

1. LE VENTILATEUR D'ÉVACUATION (FAN-03-50) DOIT RESTER EN MARCHE AVANT L'ENTRÉE. AVANT D'ENTRER DANS LE CONTENEUR #1, LA « MINUTERIE POUR FAN-03-50 » SITUÉE DANS LE CONTENEUR #3 DOIT ÊTRE AJUSTÉE À ZÉRO SECONDE.
2. LA PORTE DOIT RESTER OUVERTE POUR LA VENTILATION.
3. AVANT D'ENTRER, VOUS DEVEZ AVOIR UN VISUEL QUE LE VENTILATEUR EST EN MARCHE AVANT D'ENTRER.
4. SI LE VENTILATEUR S'ÉTEINT À L'INTÉRIEUR, VOUS DEVEZ QUITTER LA PIÈCE IMMÉDIATEMENT. (VÉRIFIER SI L'ÉTAPE 2 A ÉTÉ SUIVIE)
5. REMETTRE LA MINUTERIE À SES RÉGLAGES D'ORIGINE APRÈS LA SORTIE.

EXHAUST FAN (FAN-02-33)

ISOLATION PANEL LOCATED IN CONTAINER #3

DISCONNECT TO BE DONE AT

LIGHTING PANEL (PDP-01-01) MOTOR CIRCUIT#7

EXHAUST FAN (FAN-03-50)

ISOLATION PANEL LOCATED IN CONTAINER #3

DISCONNECT TO BE DONE AT

LIGHTING PANEL (PDP-01-01) MOTOR CIRCUIT#7

CONTAINER#1 EXHAUST FAN (FAN-02-33)

ATTENTION: ISOLATION SWITCH ONLY.

MUST DISCONNECT POWER AT SOURCE.

CIRCUIT LOCATED IN LIGHTING PANEL

(PDP-01-01) MOTOR CIRCUIT #7

CONTAINER#2 EXHAUST FAN (FAN-03-50)

ATTENTION: ISOLATION SWITCH ONLY.

MUST DISCONNECT POWER AT SOURCE.

CIRCUIT LOCATED IN LIGHTING PANEL

(PDP-01-01) MOTOR CIRCUIT #7

VENTILATEUR D'ÉCHAPPEMENT CONTAINER#1 (FAN-02-33)

ATTENTION : COMMUTATEUR D'ISOLEMENT UNIQUEMENT.

DOIT DÉBRANCHER L'ALIMENTATION À LA SOURCE.

CIRCUIT SITUÉ DANS LE PANNEAU D'ÉCLAIRAGE

(PDP-01-01) CIRCUIT #7.

VENTILATEUR D'ÉCHAPPEMENT CONTAINER#2 (FAN-03-50)

ATTENTION : COMMUTATEUR D'ISOLEMENT UNIQUEMENT.

DOIT DÉBRANCHER L'ALIMENTATION À LA SOURCE.

CIRCUIT SITUÉ DANS LE PANNEAU D'ÉCLAIRAGE

(PDP-01-01) CIRCUIT #7.

CONTAINER #1, #2, #3, #4

RECOMMENDED FAN SETTINGS
ON TIMER- RED – 5MINS
OFF TIMER – GREEN – 5MINS

All Motors/pumps
THIS EQUIPMENT
STARTS and STOPS
AUTOMATICALLY

Section 5.2

Stamped Drawings

REV	DESCRIPTION	DATE	BY	APP'D
0	FOR REFERENCE ONLY	11/27/20	GC	LB
1	REVISED PFD AS PER CUSTOMER'S COMMENTS.	09/01/21	SS	LB
2	REVISED PFD AS PER CUSTOMER'S COMMENTS.	09/27/21	SS	LB
3	REVISED PFD AS PER CUSTOMER'S COMMENTS.	12/14/21	SS	LB

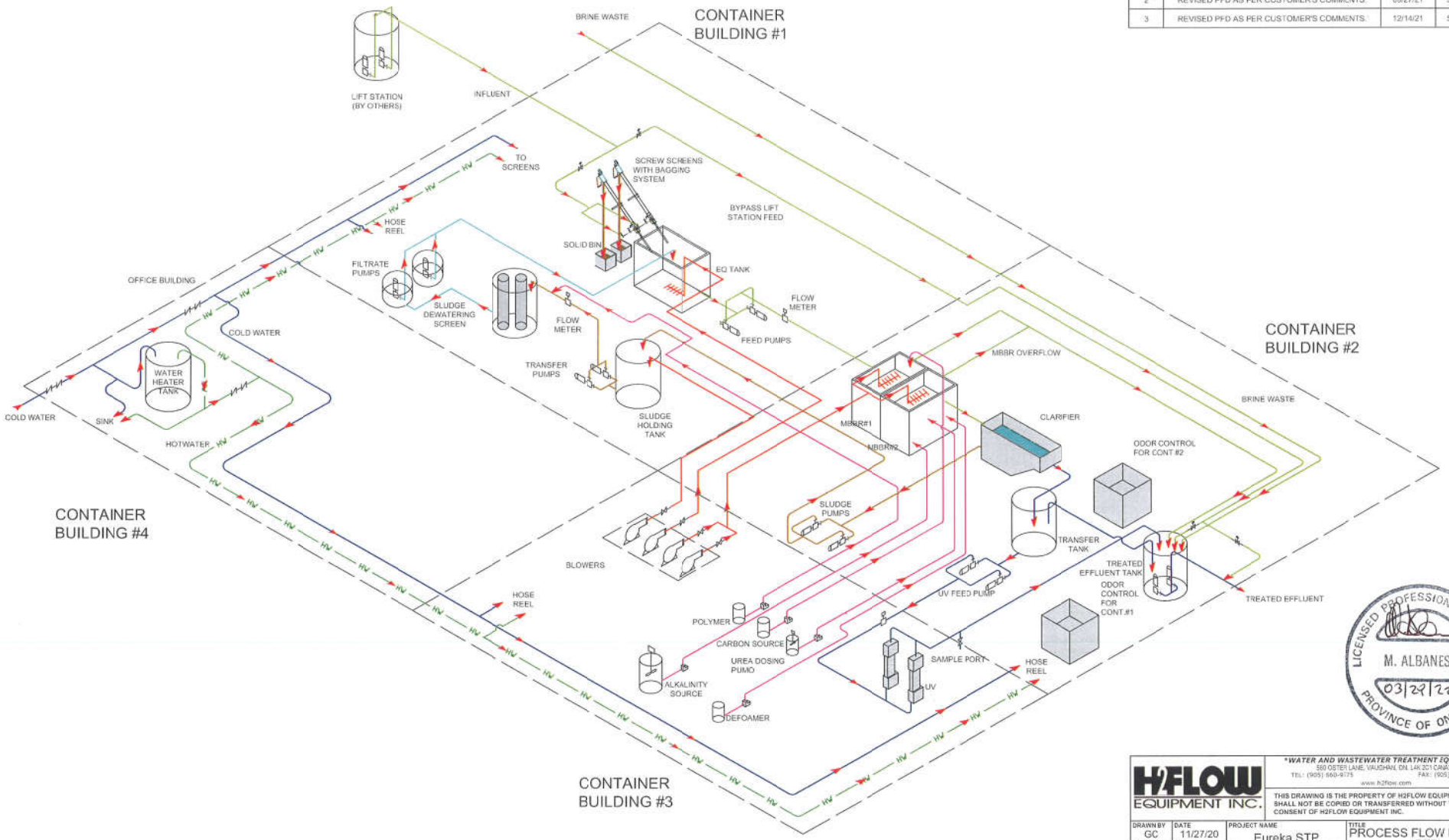

LICENSED PROFESSIONAL ENGINEER
M. ALBANESE
03/29/22
PROVINCE OF ONTARIO

H2FLOW EQUIPMENT INC.

WATER AND WASTEWATER TREATMENT EQUIPMENT
560 OSTER LANE, VAUGHAN, ON. L4K 2C1 CANADA
TEL: (905) 660-9775 FAX: (905) 660-9744
www.h2flow.com

THIS DRAWING IS THE PROPERTY OF H2FLOW EQUIPMENT INC. AND SHALL NOT BE COPIED OR TRANSFERRED WITHOUT THE WRITTEN CONSENT OF H2FLOW EQUIPMENT INC.

DRAWN BY: GC	DATE: 11/27/20	PROJECT NAME: Eureka STP Containerized MBBR	TITLE: PROCESS FLOW DIAGRAM PFD
APP'D BY: LB	DATE: 11/27/20		DRAWING No.: Q-28520-20-00
SCALE: NTS		ALL DIMENSION ARE IN "mm" UNLESS OTHERWISE SPECIFIED	REV: 4
			SHEET 1 OF 1

REV	DESCRIPTION	DATE	BY	APP'D
0	ISSUED FOR ELECTRICAL INSPECTION	07/20/22	JC	LB

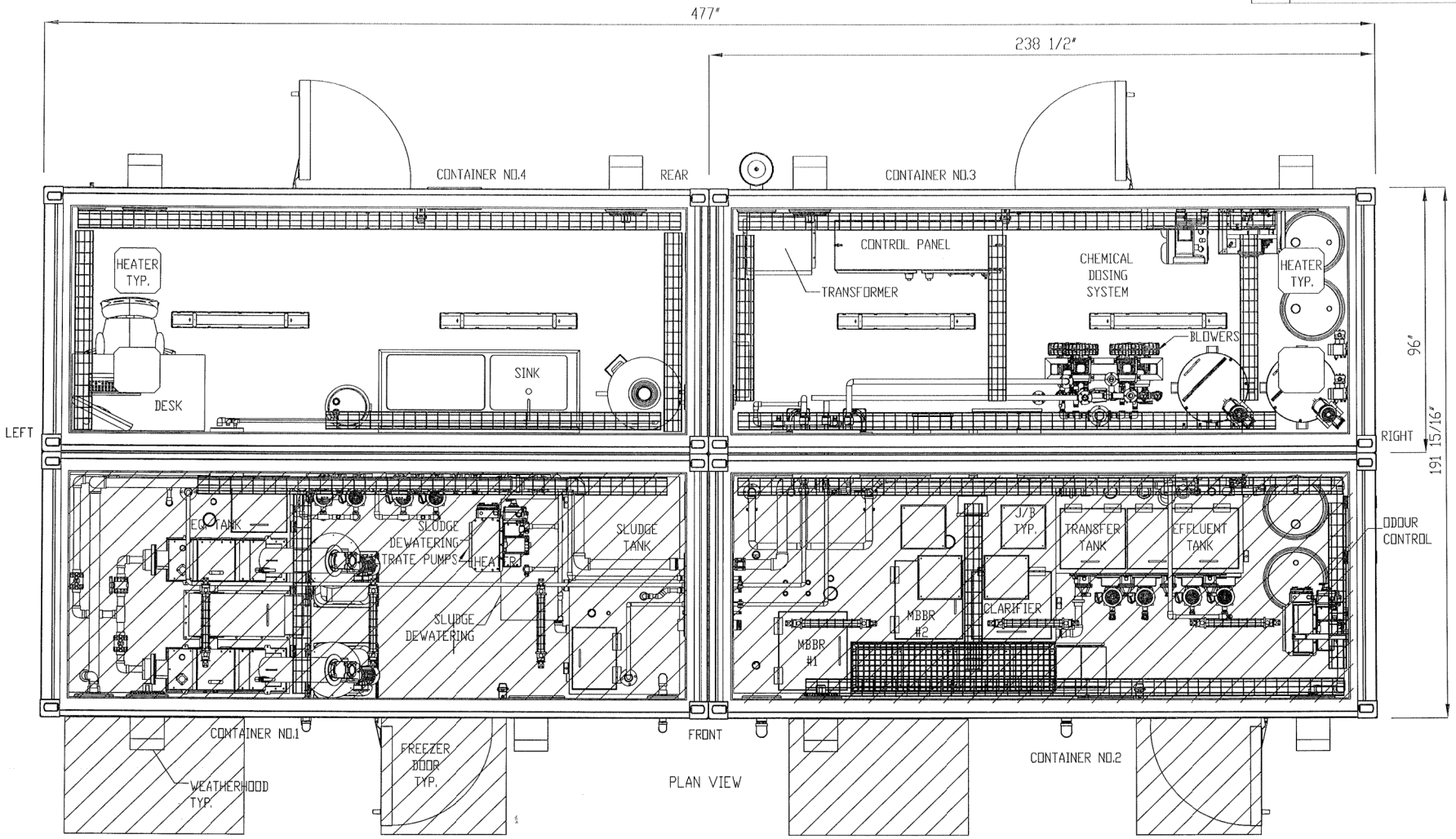

PLAN VIEW

HAZARDOUS AREA CLASS 1 DIVISION 1 GROUP C & D T1

NON-HAZARDOUS AREA

NOTE:
- EXPLOSIONPROOF EXHAUST FAN MODEL # SD08-XPF (240CFM @ 10"SP) 15 AIR EXCHANGES PER HOUR
- ROOM TEMPERATURE WINTER TIME - 15-20 DEG. CELCIUS SUMMER TIME - 25 DEG. CELCIUS

LICENSED PROFESSIONAL ENGINEER
M. ALBANESE
July 20/22
PROVINCE OF ONTARIO

H2FLOW EQUIPMENT INC.
WATER AND WASTEWATER TREATMENT EQUIPMENT
580 OSTER LANE, VAUGHAN, ON. L4K 2C1 CANADA
TEL: (905) 660-9775 FAX: (905) 660-9744
www.h2flow.com

THIS DRAWING IS THE PROPERTY OF H2FLOW EQUIPMENT INC. AND SHALL NOT BE COPIED OR TRANSFERRED WITHOUT THE WRITTEN CONSENT OF H2FLOW EQUIPMENT INC.

DRAWN BY	DATE
JC	07/20/22
APP'D BY	DATE
LB	07/20/22
SCALE	
NTS	

PROJECT NAME: EUREKA CONTAINERIZED MBBR NUNAVUT

ALL DIMENSION ARE IN "mm" UNLESS OTHERWISE SPECIFIED

TITLE: HAZARDOUS AREA CLASSIFICATION DRAWING

DRAWING No.: Q-28520-50-20

REV: 0

SHEET 1 OF 1

R10 VERSION: 01 APRIL 07, 2021

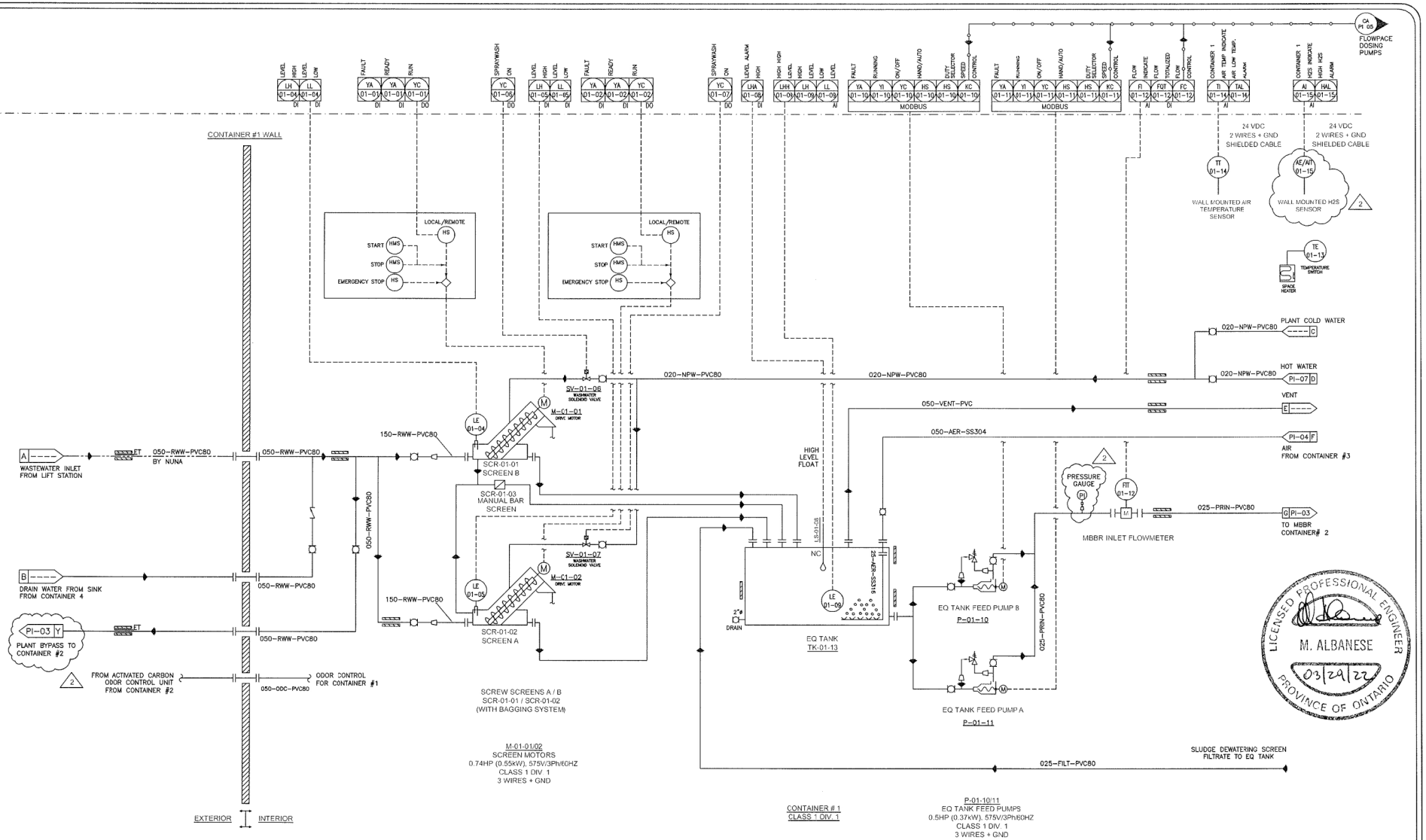

REV.	DESCRIPTION	DATE	BY
4			
3			
2	MODIFIED BASED ON CUSTOMER'S COMMENTS	03/08/22	SS
1	ADDED DEFOAMER AND ALKALINITY FEEDS	12/14/21	SS

DRAWN BY: SS — DATE: 10/27/21
CHECKED BY: LB — DATE: 10/27/21
SCALE: N.T.S

H2FLOW EQUIPMENT INC.
WATER AND WASTEWATER TREATMENT EQUIPMENT
580 OSTER LANE, CONCORD, ON L4K 2C1 CANADA
TEL: (905) 660-9775 FAX: (905) 660-9744
www.h2flow.com

REFERENCE INFORMATION

DRAWING APPROVAL

PROJECT NAME: *EUREKA STP CONTAINERIZED MBBR*

TITLE: PROCESS INSTRUMENTATION DIAGRAM - P&ID

REV. 2

DRAWING No.: Q-28520-20-01

SHEET 1 OF 7

PI-01

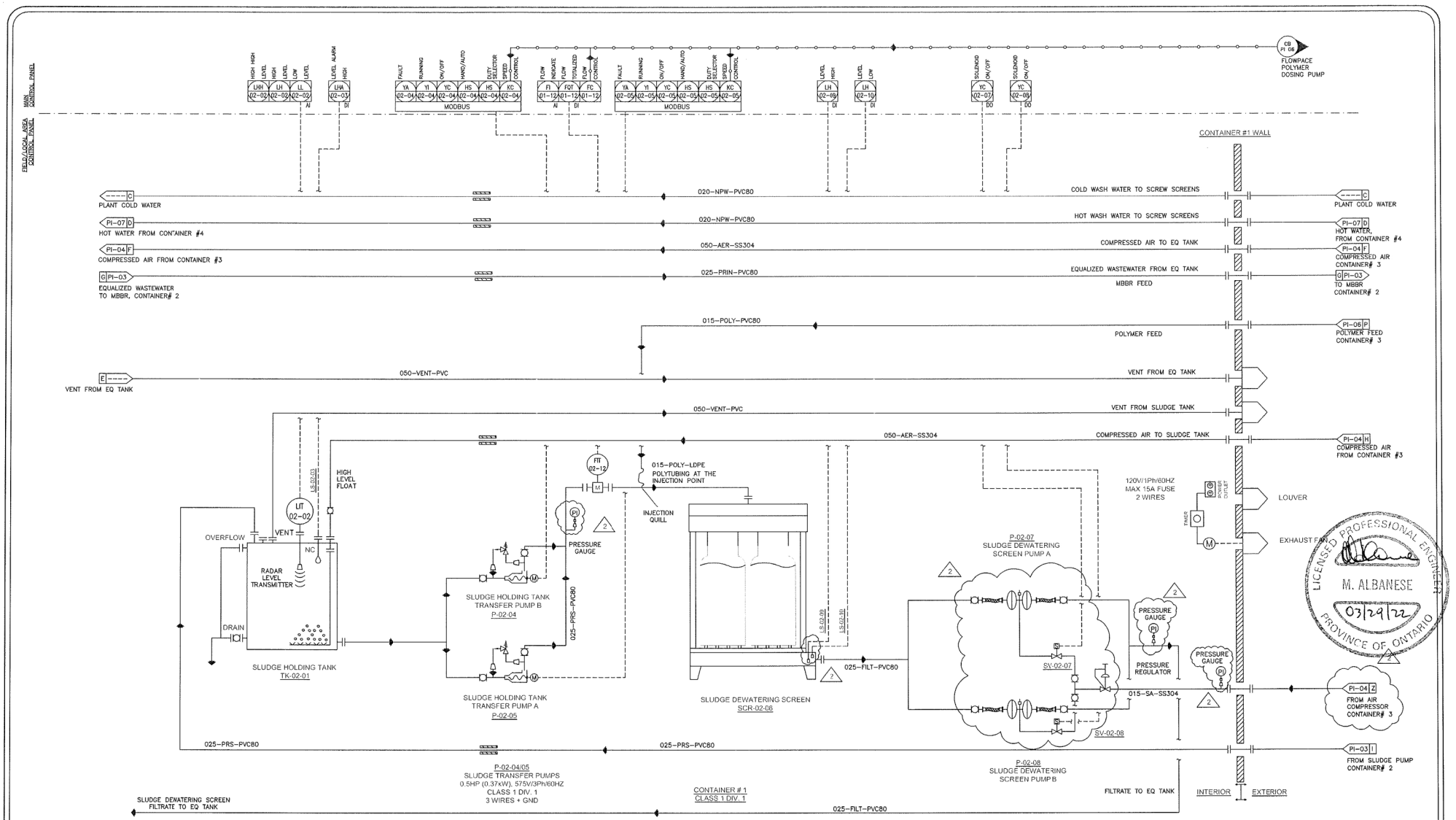

REV.	DESCRIPTION	DATE	BY
4			
3			
2	MODIFIED BASED ON CUSTOMER'S COMMENTS	03/08/22	SS
1	ADDED DEFOAMER AND ALKALINITY FEEDS	12/14/21	SS

DRAWN BY: SS — DATE: 10/27/21
CHECKED BY: LB — DATE: 10/27/21
SCALE: N.T.S

H2FLOW EQUIPMENT INC.
WATER AND WASTEWATER TREATMENT EQUIPMENT
580 OSTER LANE, CONCORD, ON L4K 2C1 CANADA
TEL: (905) 660-9775 FAX: (905) 660-9744
www.h2flow.com

REFERENCE INFORMATION

DRAWING APPROVAL

PROJECT NAME: *EUREKA STP CONTAINERIZED MBBR*

TITLE: PROCESS INSTRUMENTATION DIAGRAM - P&ID

REV. 2

DRAWING No.: Q-28520-20-01

SHEET 2 OF 7

PI-02

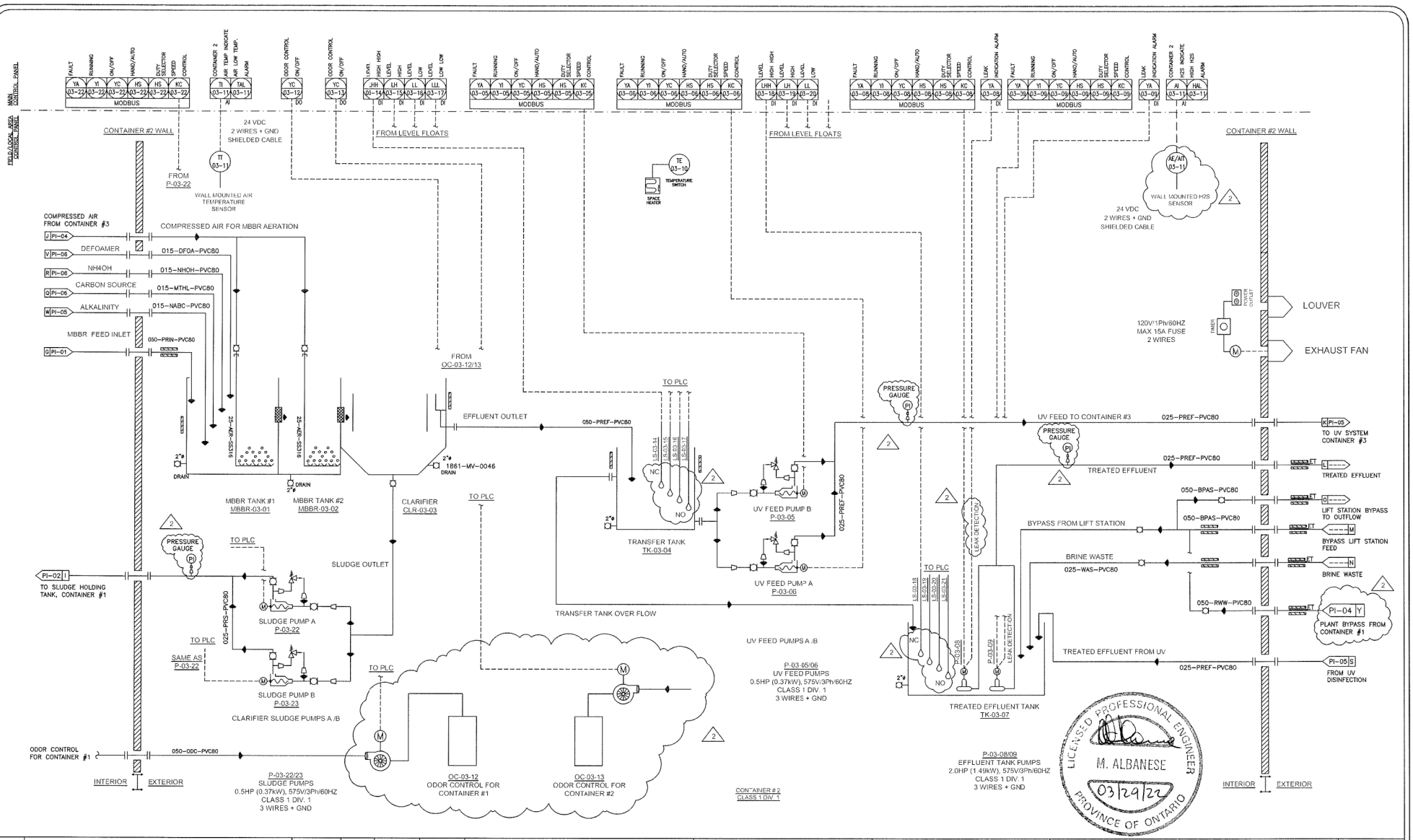

REV.	DESCRIPTION	DATE	BY
4			
3			
2	MODIFIED BASED ON CUSTOMER'S COMMENTS	03/08/22	SS
1	ADDED DEFOAMER AND ALKALINITY FEEDS	12/14/21	SS

DRAWN BY: SS — DATE: 10/28/21
CHECKED BY: LB — DATE: 10/28/21
SCALE: N.T.S

H2FLOW EQUIPMENT INC.
WATER AND WASTEWATER TREATMENT EQUIPMENT
580 OSTER LANE, CONCORD, ON L4K 2C1 CANADA
TEL: (905) 660-9775 FAX: (905) 660-9744
www.h2flow.com

REFERENCE INFORMATION

DRAWING APPROVAL

PROJECT NAME: *EUREKA STP CONTAINERIZED MBBR*

TITLE: PROCESS INSTRUMENTATION DIAGRAM - P&ID

REV. 2

DRAWING No.: Q-28520-20-01

SHEET 3 OF 7

PI-03

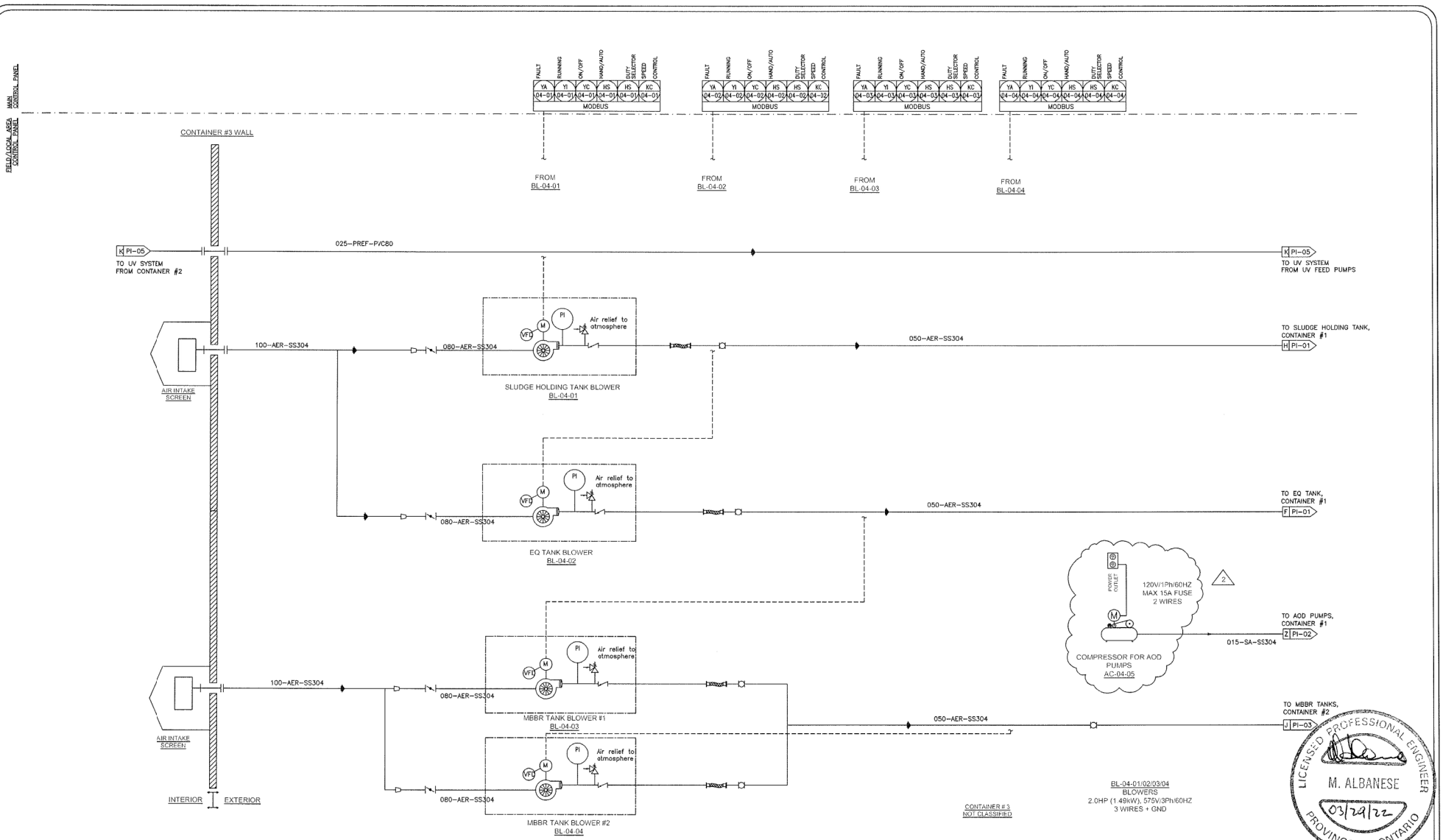

LICENSED PROFESSIONAL ENGINEER
M. ALBANESE
03/29/22
PROVINCE OF ONTARIO

REV.	DESCRIPTION	DATE	BY
4			
3			
2	MODIFIED BASED ON CUSTOMER'S COMMENTS	03/08/22	SS
1	ADDED DEFOAMER AND ALKALINITY FEEDS	12/14/21	SS

DRAWN BY: SS — DATE: 10/28/21
CHECKED BY: LB — DATE: 10/28/21
SCALE: N.T.S

H2FLOW EQUIPMENT INC.
WATER AND WASTEWATER TREATMENT EQUIPMENT
580 OSTER LANE, CONCORD, ON L4K 2C1 CANADA
TEL: (905) 660-9775 FAX: (905) 660-9744
www.h2flow.com

REFERENCE INFORMATION

DRAWING APPROVAL

PROJECT NAME: *EUREKA STP CONTAINERIZED MBBR*

TITLE: PROCESS INSTRUMENTATION DIAGRAM - P&ID

REV. 2

DRAWING No.: Q-28520-20-01

SHEET 4 OF 7

PI-04

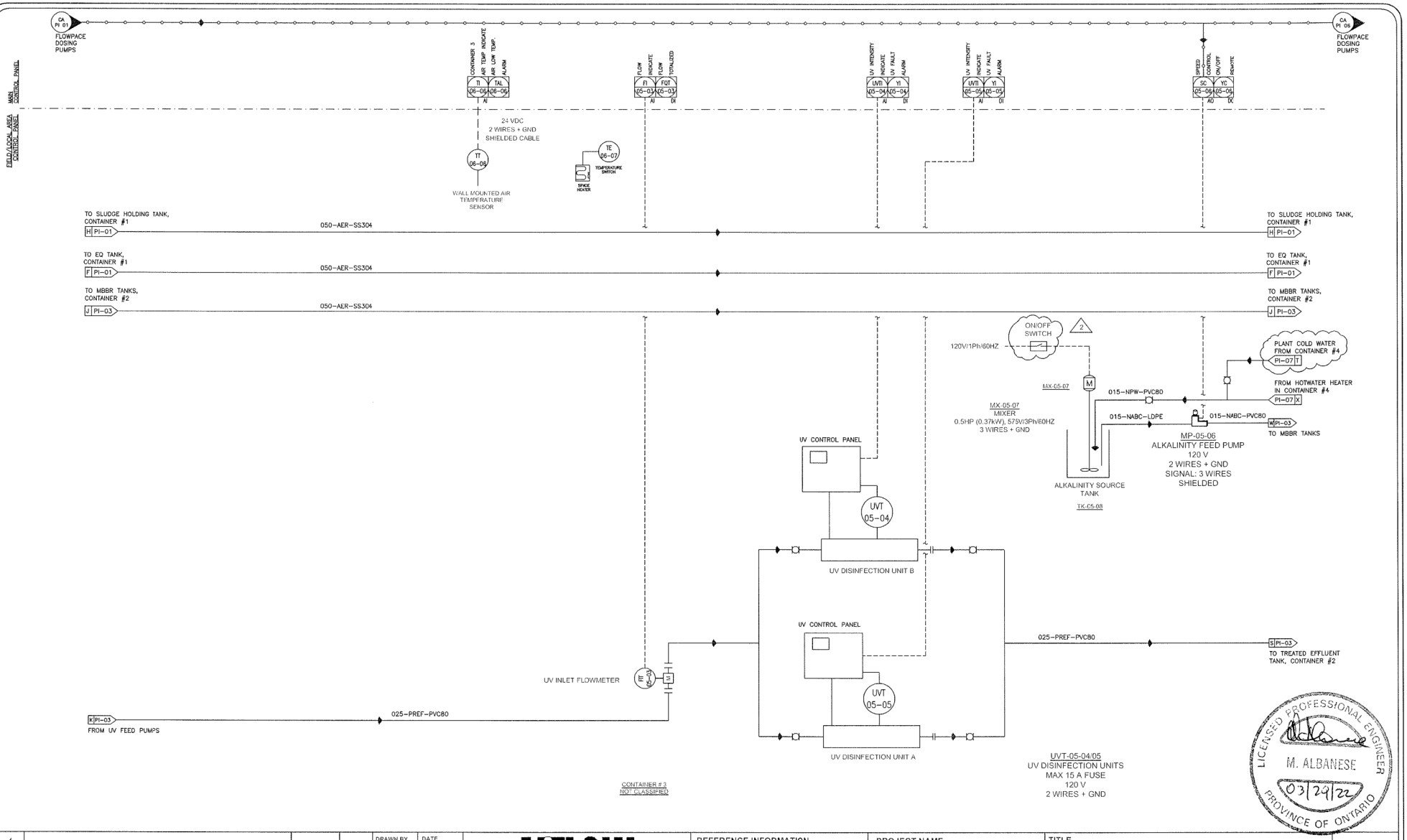

REV.	DESCRIPTION	DATE	BY
4			
3			
2	MODIFIED BASED ON CUSTOMER'S COMMENTS	03/08/22	SS
1	ADDED DEFOAMER AND ALKALINITY FEEDS	12/14/21	SS

DRAWN BY: SS — DATE: 10/28/21
CHECKED BY: LB — DATE: 10/28/21
SCALE: N.T.S

H2FLOW EQUIPMENT INC.
WATER AND WASTEWATER TREATMENT EQUIPMENT
580 OSTER LANE, CONCORD, ON L4K 2C1 CANADA
TEL: (905) 660-9775 FAX: (905) 660-9744
www.h2flow.com

REFERENCE INFORMATION

DRAWING APPROVAL

PROJECT NAME: *EUREKA STP CONTAINERIZED MBBR*

TITLE: PROCESS INSTRUMENTATION DIAGRAM - P&ID

REV. 2

DRAWING No.: Q-28520-20-01

SHEET 5 OF 7

PI-05

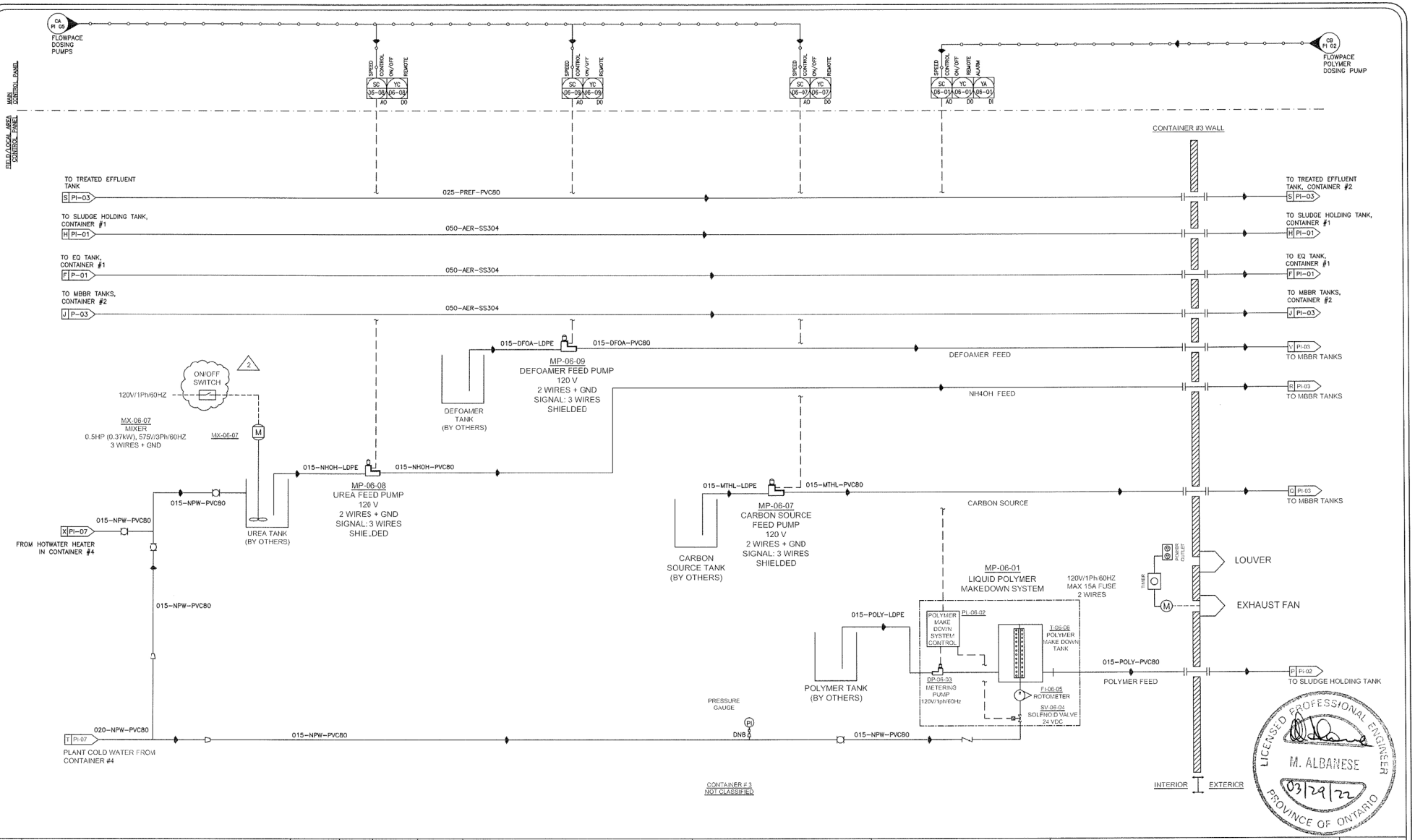

REV.	DESCRIPTION	DATE	BY
4			
3			
2	MODIFIED BASED ON CUSTOMER'S COMMENTS	03/08/22	SS
1	ADDED DEFOAMER AND ALKALINITY FEEDS	12/14/21	SS

DRAWN BY: SS — DATE: 10/05/21
CHECKED BY: LB — DATE: 10/05/21
SCALE: N.T.S

H2FLOW EQUIPMENT INC.
WATER AND WASTEWATER TREATMENT EQUIPMENT
580 OSTER LANE, CONCORD, ON L4K 2C1 CANADA
TEL: (905) 660-9775 FAX: (905) 660-9744
www.h2flow.com

REFERENCE INFORMATION

DRAWING APPROVAL

PROJECT NAME: *EUREKA STP CONTAINERIZED MBBR*

TITLE: PROCESS INSTRUMENTATION DIAGRAM - P&ID

REV. 2

DRAWING No.: Q-28520-20-01

SHEET 6 OF 7

PI-06

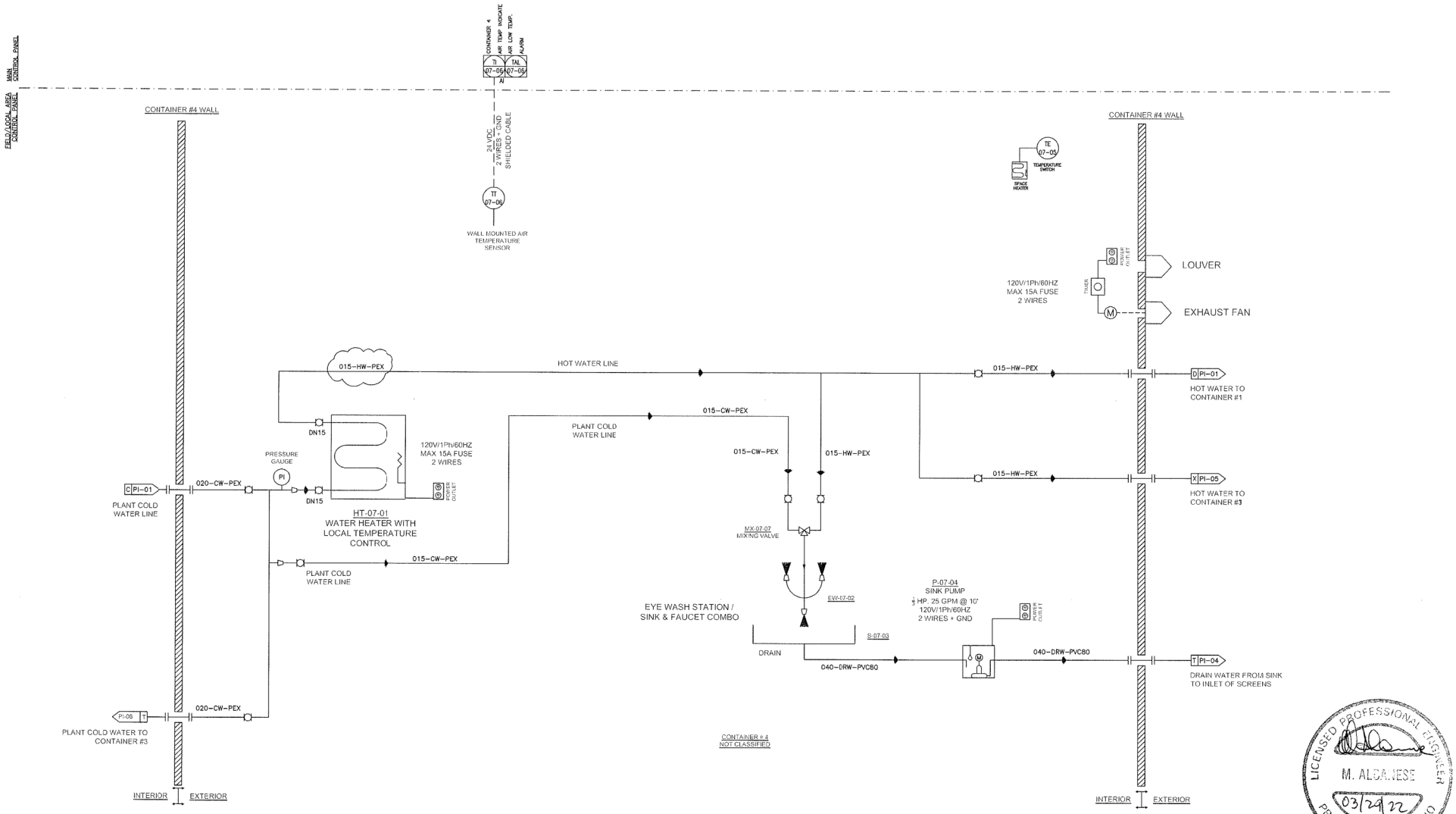

LICENSED PROFESSIONAL ENGINEER
M. ALBANESE
03/24/22
PROVINCE OF ONTARIO

REV.	DESCRIPTION	DATE	BY
4			
3			
2	MODIFIED BASED ON CUSTOMER'S COMMENTS	03/08/22	SS
1	ADDED DEFOAMER AND ALKALINITY FEEDS	12/14/21	SS

DRAWN BY: SS — DATE: 10/28/21
CHECKED BY: LB — DATE: 10/28/21
SCALE: N.T.S

H2FLOW EQUIPMENT INC.
WATER AND WASTEWATER TREATMENT EQUIPMENT
580 OSTER LANE, CONCORD, ON L4K 2C1 CANADA
TEL: (905) 660-9775 FAX: (905) 660-9744
www.h2flow.com

REFERENCE INFORMATION

DRAWING APPROVAL

PROJECT NAME: *EUREKA STP CONTAINERIZED MBBR*

TITLE: PROCESS INSTRUMENTATION DIAGRAM - P&ID

REV. 2

DRAWING No.: Q-28520-20-01

SHEET 7 OF 7

PI-07

REV	DESCRIPTION	DATE	BY	APP'D
0	FOR REFERENCE ONLY	01/26/22	JC	LB

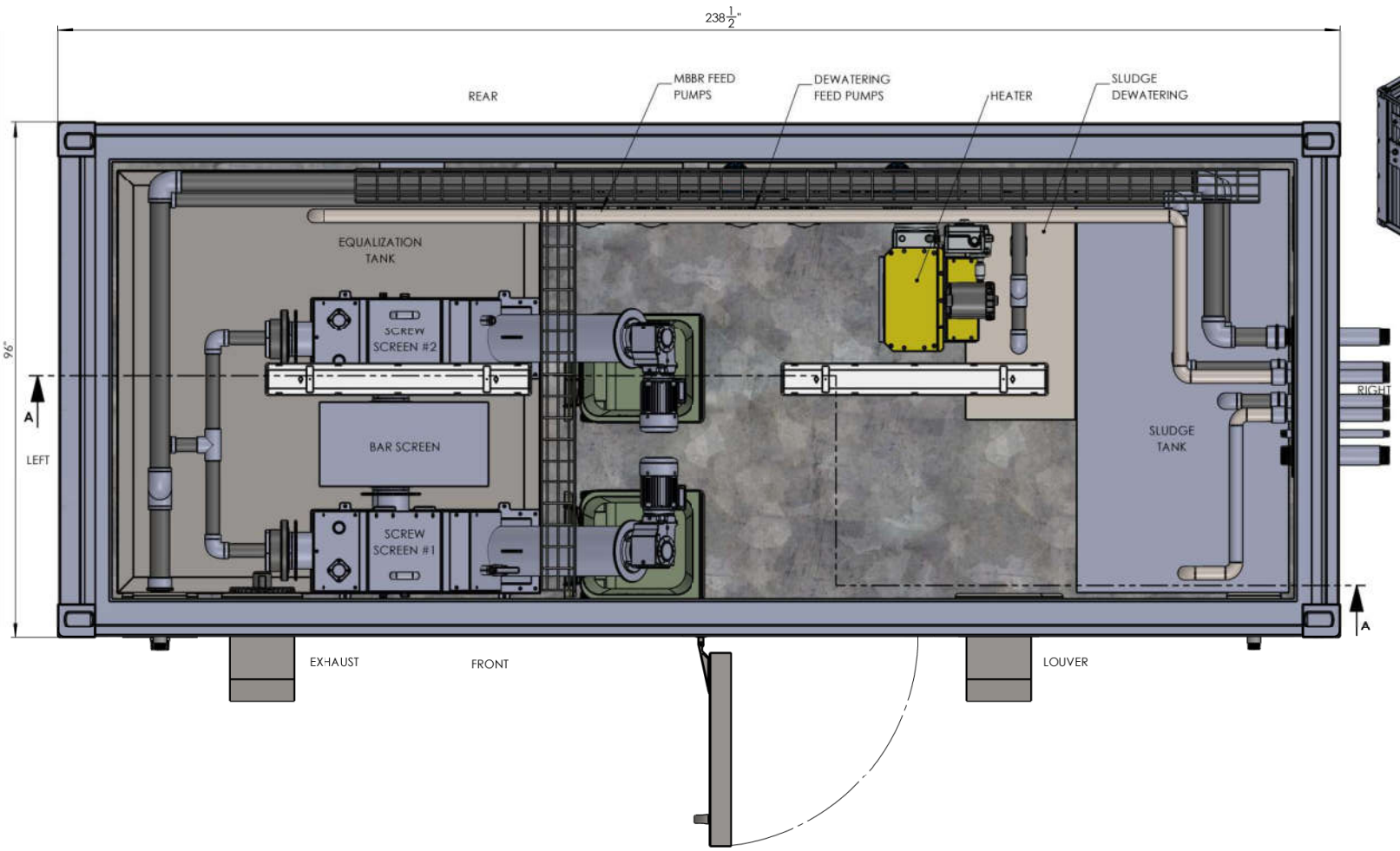

CONTAINER #1
PLAN VIEW

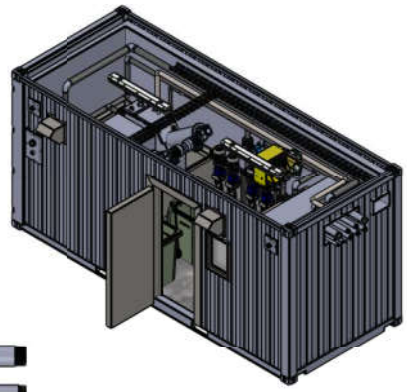

REGISTERED PROFESSIONAL ENGINEER
B.A. WITZEL
LICENSEE
04/01/2022
NT/NU

WITZEL DYCE ENGINEERING INC.
WDE PROJECT No. 14842-100
FOR STRUCTURAL DESIGN ONLY.

GENERAL NOTES:
1. REFER TO ATTACHED SHIPPING CONTAINER SPECIFICATIONS FOR STRUCTURAL SIZING.

PERMIT TO PRACTICE
WITZEL DYCE ENGINEERING INC.
Signature
Date 04/01/2022
PERMIT NUMBER: P 1478
NT/NU Association of Professional Engineers and Geoscientists

H2FLOW EQUIPMENT INC.

WATER AND WASTEWATER TREATMENT EQUIPMENT
580 OSTER LANE, CONCORD, ON L4K 2C1 CANADA
TEL: (905) 660-9775 FAX: (905) 660-9744
www.h2flow.com

THIS DRAWING IS THE PROPERTY OF H2FLOW EQUIPMENT INC. AND SHALL NOT BE COPIED OR TRANSFERRED WITHOUT THE WRITTEN CONSENT OF H2FLOW EQUIPMENT INC.

DRAWN BY: JC	DATE: 01/27/22	PROJECT NAME: EUREKA STP CONTAINERIZED MBBR NUNAVUT	TITLE: CONTAINER NO.1 LAYOUT w/PIPING
APP'D BY: LB	DATE: 01/27/22		DRAWING No.: Q-28520-51-10
SCALE: NTS		ALL DIMENSION ARE IN INCHES UNLESS OTHERWISE SPECIFIED	REV: 0
			SHEET 1 OF 5

REV	DESCRIPTION	DATE	BY	APP'D
0	FOR REFERENCE ONLY	01/26/22	JC	LB
1	REVISED AS PER COMMENTS	02/10/22	JC	LB

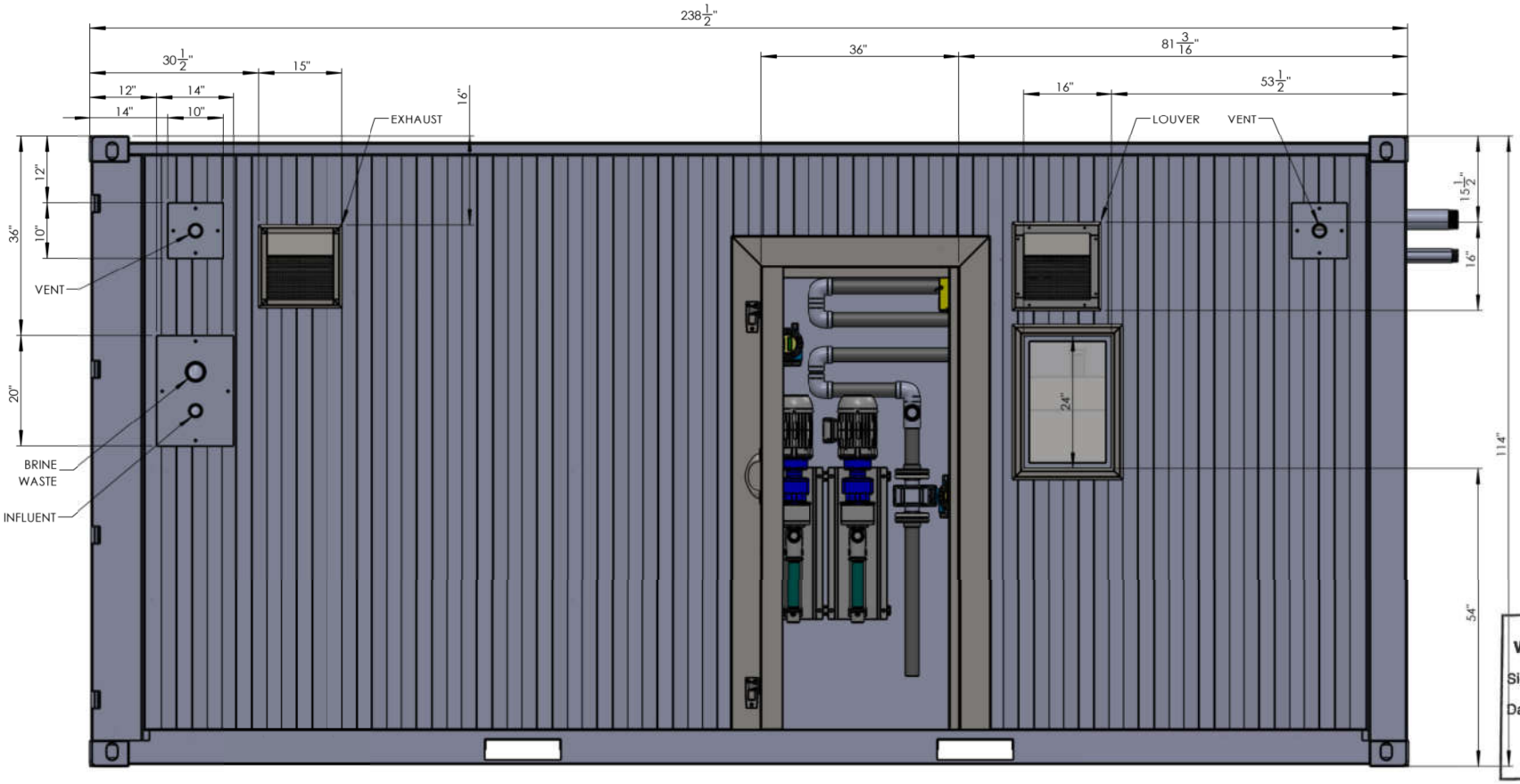

FRONT VIEW

REGISTERED PROFESSIONAL ENGINEER
D.A. WITZEL
LICENSEE
04/01/2022
NT/NU

WITZEL DYCE ENGINEERING INC.
WDE PROJECT No. 14842-100
FOR STRUCTURAL DESIGN ONLY.

GENERAL NOTES:
1. REFER TO ATTACHED SHIPPING CONTAINER SPECIFICATIONS FOR STRUCTURAL SIZING.

PERMIT TO PRACTICE
WITZEL DYCE ENGINEERING INC.
Signature
Date 04/01/2022
PERMIT NUMBER: P 1478
NT/NU Association of Professional Engineers and Geoscientists

H2FLOW EQUIPMENT INC.
WATER AND WASTEWATER TREATMENT EQUIPMENT
580 OSTER LANE, CONCORD, ON L4K 2C1 CANADA
TEL: (905) 660-9775 FAX: (905) 660-9744
www.h2flow.com

THIS DRAWING IS THE PROPERTY OF H2FLOW EQUIPMENT INC. AND SHALL NOT BE COPIED OR TRANSFERRED WITHOUT THE WRITTEN CONSENT OF H2FLOW EQUIPMENT INC.

DRAWN BY: JC	DATE: 01/27/22	PROJECT NAME: EUREKA STP CONTAINERIZED MBBR NUNAVUT	TITLE: CONTAINER NO.1 LAYOUT w/PIPING
APP'D BY: LB	DATE: 01/27/22		DRAWING No.: Q-28520-51-10
SCALE: NTS		ALL DIMENSION ARE IN INCHES UNLESS OTHERWISE SPECIFIED	REV: 1
			SHEET 2 OF 5

REV	DESCRIPTION	DATE	BY	APP'D
0	FOR REFERENCE ONLY	01/26/22	JC	LB
1	REVISED AS PER COMMENTS	02/10/22	JC	LB

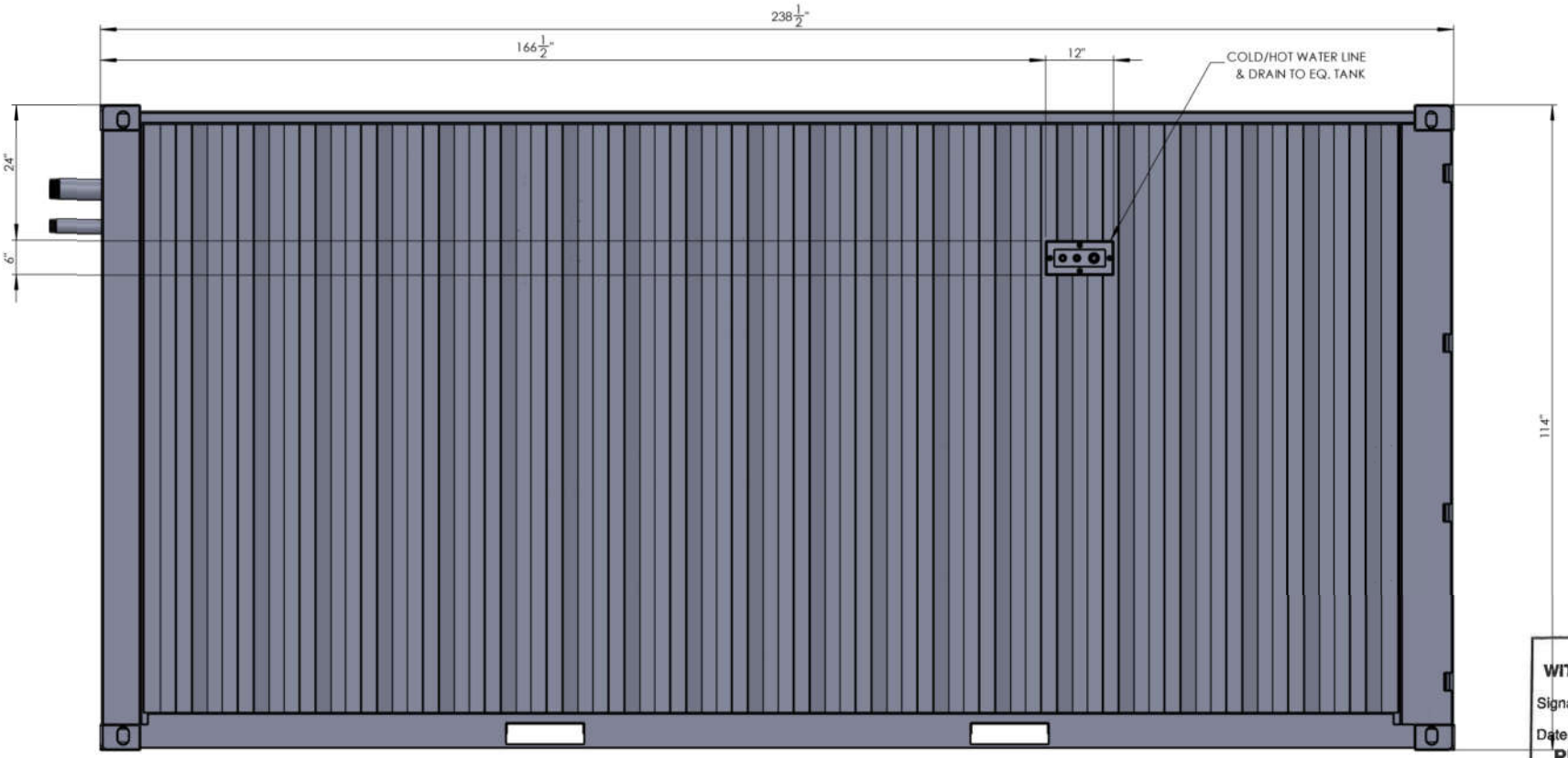

REAR VIEW

REGISTERED PROFESSIONAL ENGINEER
B.A. WITZEL
LICENSEE
04/01/2022
NT/NU

WITZEL DYCE ENGINEERING INC.
WDE PROJECT No. 14842-100
FOR STRUCTURAL DESIGN ONLY.

GENERAL NOTES:
1. REFER TO ATTACHED SHIPPING CONTAINER SPECIFICATIONS FOR STRUCTURAL SIZING.

PERMIT TO PRACTICE
WITZEL DYCE ENGINEERING INC.
Signature
Date 04/01/2022
PERMIT NUMBER: P 1478
NT/NU Association of Professional Engineers and Geoscientists

H2FLOW EQUIPMENT INC.

WATER AND WASTEWATER TREATMENT EQUIPMENT
580 OSTER LANE, CONCORD, ON L4K 2C1 CANADA
TEL: (905) 660-9775 FAX: (905) 660-9744
www.h2flow.com

THIS DRAWING IS THE PROPERTY OF H2FLOW EQUIPMENT INC. AND SHALL NOT BE COPIED OR TRANSFERRED WITHOUT THE WRITTEN CONSENT OF H2FLOW EQUIPMENT INC.

DRAWN BY: JC	DATE: 01/27/22	PROJECT NAME: EUREKA STP CONTAINERIZED MBBR NUNAVUT	TITLE: CONTAINER NO.1 LAYOUT w/PIPING
APP'D BY: LB	DATE: 01/27/22		DRAWING No.: Q-28520-51-10
SCALE: NTS		ALL DIMENSION ARE IN INCHES UNLESS OTHERWISE SPECIFIED	REV: 1
			SHEET 3 OF 5

REV	DESCRIPTION	DATE	BY	APP'D
0	FOR REFERENCE ONLY	01/26/22	JC	LB
1	REVISED AS PER COMMENTS	02/10/22	JC	LB

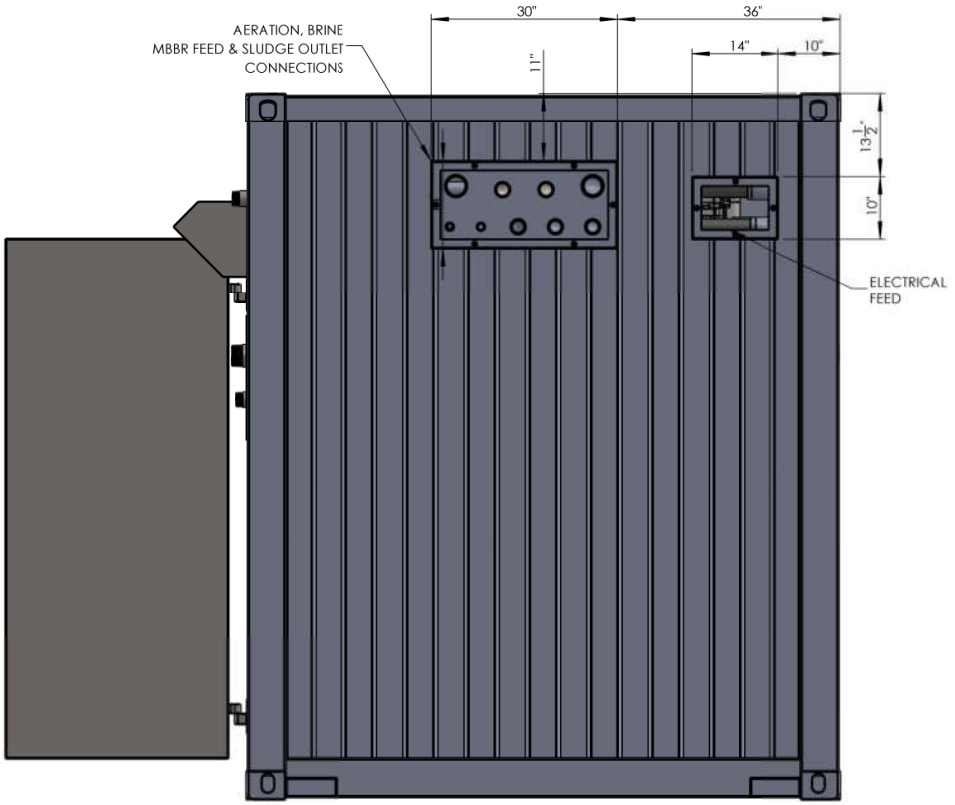

RIGHT VIEW

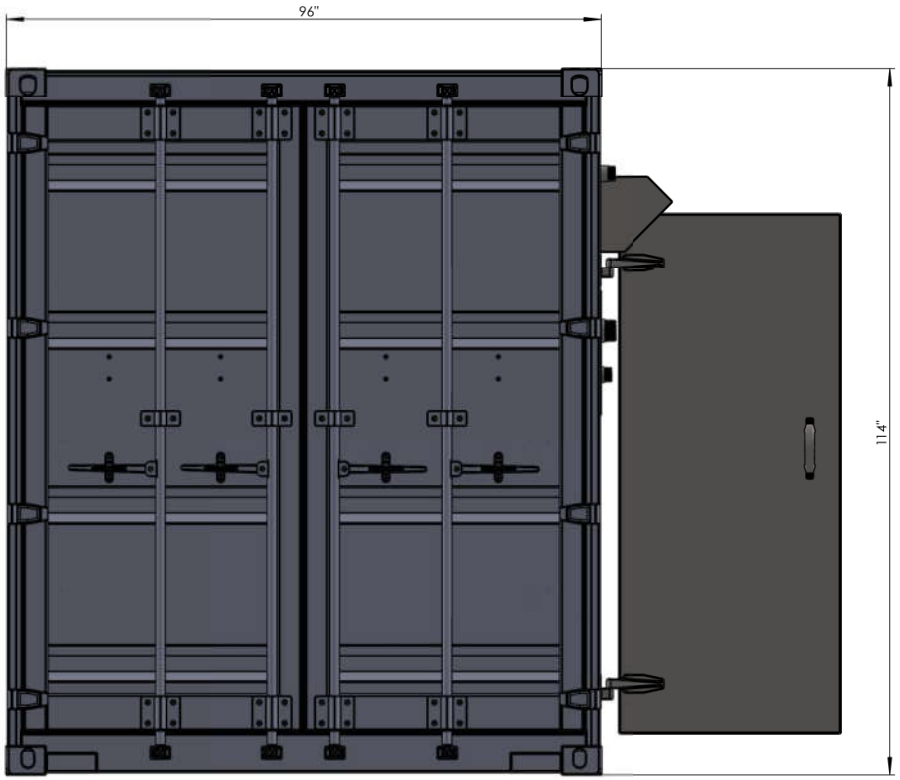

LEFT VIEW

PERMIT TO PRACTICE
WITZEL DYCE ENGINEERING INC.
Signature
Date 04/01/2022
PERMIT NUMBER: P 1478
NT/NU Association of Professional Engineers and Geoscientists

REGISTERED PROFESSIONAL ENGINEER
D.A. WITZEL
LICENSEE
04/01/2022
NT/NU

WITZEL DYCE ENGINEERING INC.
WDE PROJECT No. 14842-100
FOR STRUCTURAL DESIGN ONLY.

GENERAL NOTES:
1. REFER TO ATTACHED SHIPPING CONTAINER SPECIFICATIONS FOR STRUCTURAL SIZING.

H2FLOW EQUIPMENT INC.
WATER AND WASTEWATER TREATMENT EQUIPMENT
580 OSTER LANE, CONCORD, ON L4K 2C1 CANADA
TEL: (905) 660-9775 FAX: (905) 660-9744
www.h2flow.com

THIS DRAWING IS THE PROPERTY OF H2FLOW EQUIPMENT INC. AND SHALL NOT BE COPIED OR TRANSFERRED WITHOUT THE WRITTEN CONSENT OF H2FLOW EQUIPMENT INC.

DRAWN BY: JC	DATE: 01/27/22	PROJECT NAME: EUREKA STP CONTAINERIZED MBBR NUNAVUT	TITLE: CONTAINER NO.1 LAYOUT w/PIPING
APP'D BY: LB	DATE: 01/27/22		DRAWING No.: Q-28520-51-10
SCALE: NTS			REV: 1
		ALL DIMENSION ARE IN INCHES UNLESS OTHERWISE SPECIFIED	SHEET 4 OF 5

REV	DESCRIPTION	DATE	BY	APP'D
0	FOR REFERENCE ONLY	01/26/22	JC	LB
1	REVISED AS PER COMMENTS	02/10/22	JC	LB

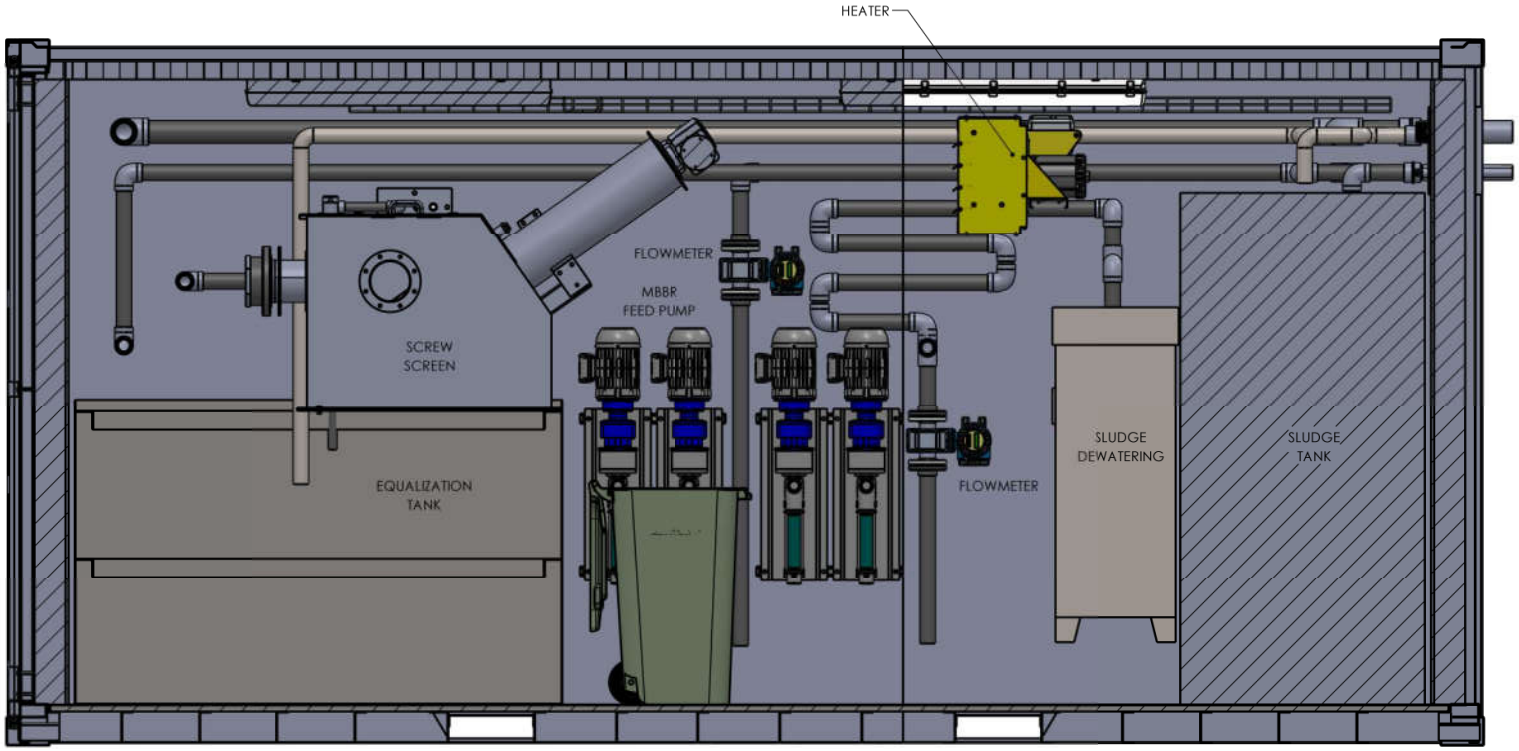

SECTION A-A

REGISTERED PROFESSIONAL ENGINEER
B.A. WITZEL
LICENSEE
04/01/2022
NT/NU

WITZEL DYCE ENGINEERING INC.
WDE PROJECT No. 1482-100
FOR STRUCTURAL DESIGN ONLY.

GENERAL NOTES:
1. REFER TO ATTACHED SHIPPING CONTAINER SPECIFICATIONS FOR STRUCTURAL SIZING.

PERMIT TO PRACTICE
WITZEL DYCE ENGINEERING INC.
Signature
Date 04/01/2022
PERMIT NUMBER: P 1478
NT/NU Association of Professional Engineers and Geoscientists

H2FLOW EQUIPMENT INC.
WATER AND WASTEWATER TREATMENT EQUIPMENT
580 OSTER LANE, CONCORD, ON L4K 2C1 CANADA
TEL: (905) 660-9775 FAX: (905) 660-9744
www.h2flow.com

THIS DRAWING IS THE PROPERTY OF H2FLOW EQUIPMENT INC. AND SHALL NOT BE COPIED OR TRANSFERRED WITHOUT THE WRITTEN CONSENT OF H2FLOW EQUIPMENT INC.

DRAWN BY: JC	DATE: 01/27/22	PROJECT NAME: EUREKA STP CONTAINERIZED MBBR NUNAVUT	TITLE: CONTAINER NO.1 LAYOUT w/PIPING
APP'D BY: LB	DATE: 01/27/22		DRAWING No.: Q-28520-51-10
SCALE: NTS		ALL DIMENSION ARE IN INCHES UNLESS OTHERWISE SPECIFIED	REV: 1
			SHEET 5 OF 5

REV	DESCRIPTION	DATE	BY	APP'D
0	FOR REFERENCE ONLY	01/26/22	JC	LB
1	REVISED AS PER CUSTOMER'S COMMENT	02/14/22	JC	LB

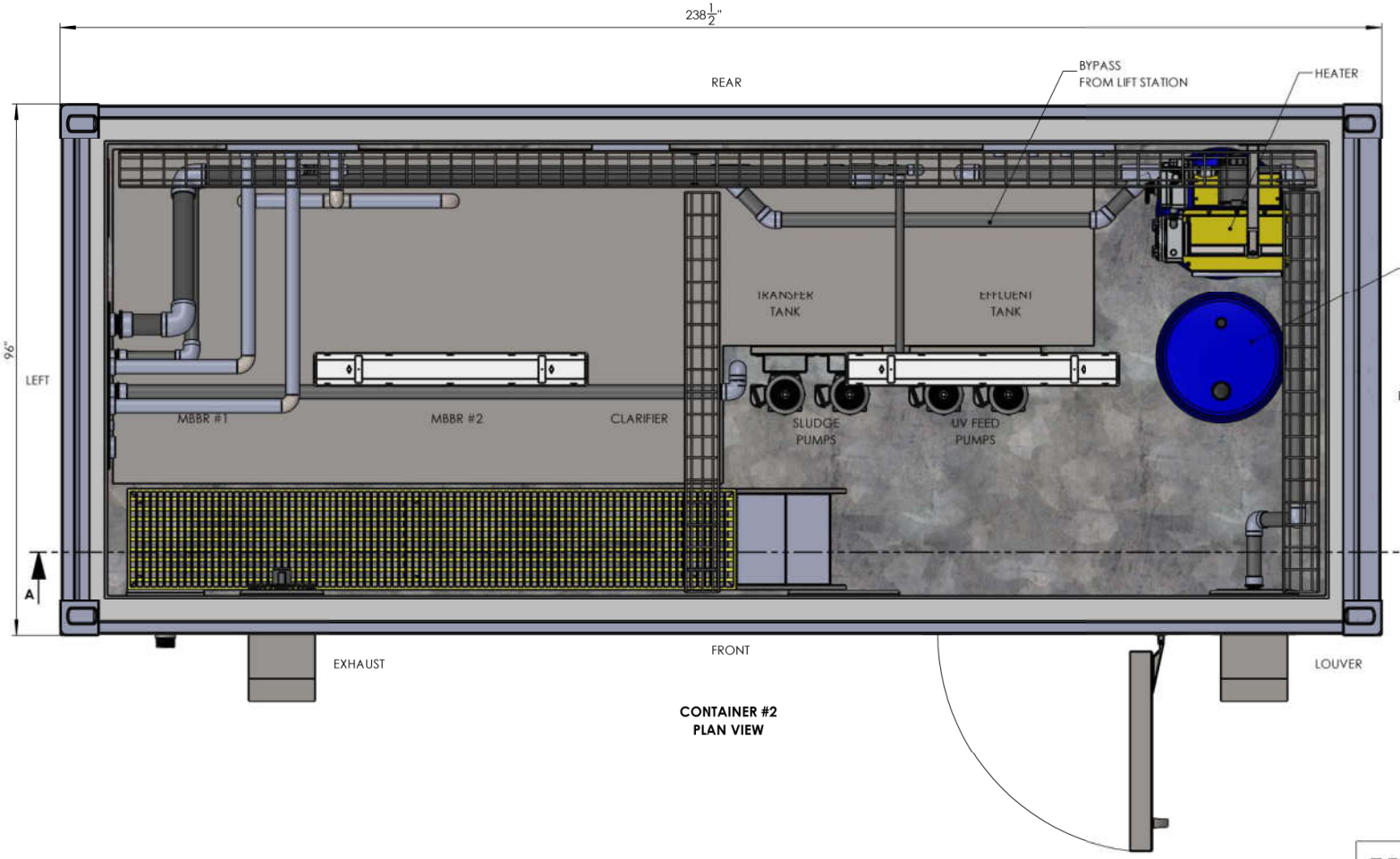

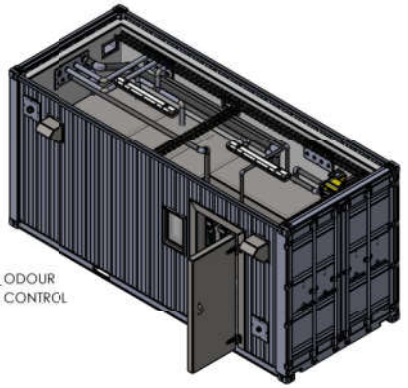

CONTAINER #2
PLAN VIEW

NOTES:
1. FLOOR INSULATION: 5" POLYURETHANE INSULATION
2. 3/16" THICK ALUMINUM CHECKER PLATE
3. WALL/CEILING INSULATION: 5" POLYURETHANE INSULATION
4. WALL FINISHES: 3/8" NU-POLY PANELS, WITH VINYL TRIMS

REGISTERED PROFESSIONAL ENGINEER
B.A. WITZEL
LICENSEE
04/01/2022
NT/NU

WITZEL DYCE ENGINEERING INC.
WDE PROJECT No. 1842-100
FOR STRUCTURAL DESIGN ONLY.

GENERAL NOTES:
1. REFER TO ATTACHED SHIPPING CONTAINER SPECIFICATIONS FOR STRUCTURAL SIZING.

PERMIT TO PRACTICE
WITZEL DYCE ENGINEERING INC.
Signature
Date 04/01/2022
PERMIT NUMBER: P 1478
NT/NU Association of Professional Engineers and Geoscientists

H2FLOW EQUIPMENT INC.
WATER AND WASTEWATER TREATMENT EQUIPMENT
580 OSTER LANE, CONCORD, ON L4K 2C1 CANADA
TEL: (905) 660-9775 FAX: (905) 660-9744
www.h2flow.com

THIS DRAWING IS THE PROPERTY OF H2FLOW EQUIPMENT INC. AND SHALL NOT BE COPIED OR TRANSFERRED WITHOUT THE WRITTEN CONSENT OF H2FLOW EQUIPMENT INC.

DRAWN BY: JC	DATE: 01/26/22	PROJECT NAME: EUREKA STP CONTAINERIZED MBBR NUNAVUT	TITLE: CONTAINER NO.2 LAYOUT w/PIPING
APP'D BY: LB	DATE: 01/26/22		DRAWING No.: Q-28520-52-10
SCALE: NTS			REV: 1
		ALL DIMENSION ARE IN INCHES UNLESS OTHERWISE SPECIFIED	SHEET 1 OF 5

REV	DESCRIPTION	DATE	BY	APP'D
0	FOR REFERENCE ONLY	01/26/22	JC	LB
1	REVISED AS PER CUSTOMER'S COMMENT	02/14/22	JC	LB

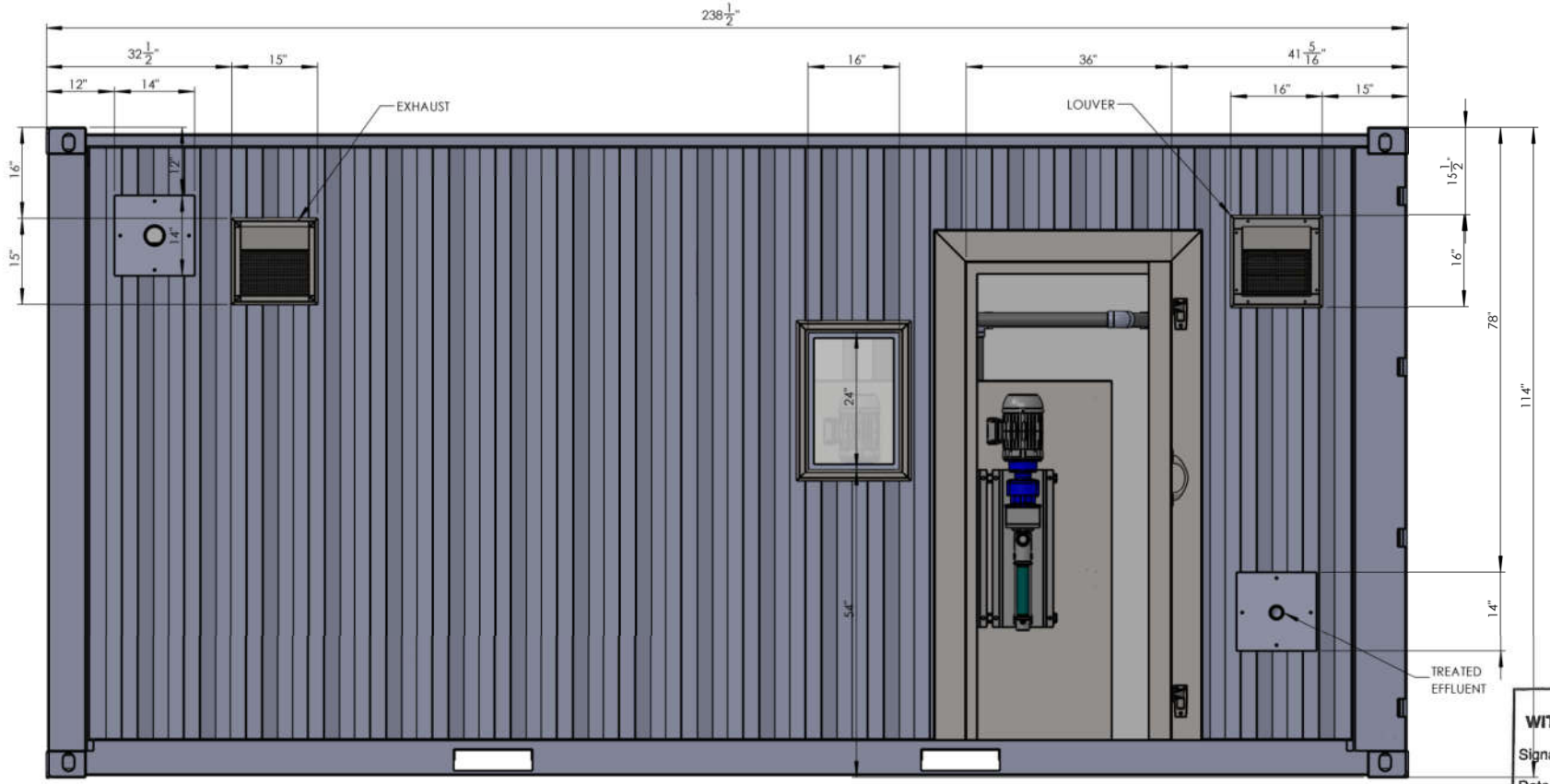

FRONT VIEW

REGISTERED PROFESSIONAL ENGINEER
D.A. WITZEL
LICENSEE
04/01/2022
NT/NU

WITZEL DYCE ENGINEERING INC.
WDE PROJECT No. 14842-100
FOR STRUCTURAL DESIGN ONLY.

GENERAL NOTES:
1. REFER TO ATTACHED SHIPPING CONTAINER SPECIFICATIONS FOR STRUCTURAL SIZING.

PERMIT TO PRACTICE
WITZEL DYCE ENGINEERING INC.
Signature
Date 04/01/2022
PERMIT NUMBER: P 1478
NT/NU Association of Professional Engineers and Geoscientists

H2FLOW EQUIPMENT INC.

WATER AND WASTEWATER TREATMENT EQUIPMENT
580 OSTER LANE, CONCORD, ON L4K 2C1 CANADA
TEL: (905) 660-9775 FAX: (905) 660-9744
www.h2flow.com

THIS DRAWING IS THE PROPERTY OF H2FLOW EQUIPMENT INC. AND SHALL NOT BE COPIED OR TRANSFERRED WITHOUT THE WRITTEN CONSENT OF H2FLOW EQUIPMENT INC.

DRAWN BY	DATE	PROJECT NAME	TITLE
JC	01/26/22	EUREKA STP CONTAINERIZED MBBR NUNAVUT	CONTAINER NO.2 LAYOUT w/PIPING
APP'D BY: LB	DATE: 01/26/22		DRAWING No.: Q-28520-52-10
SCALE: NTS		ALL DIMENSION ARE IN INCHES UNLESS OTHERWISE SPECIFIED	REV: 1
			SHEET 2 OF 5

REV	DESCRIPTION	DATE	BY	APP'D
0	FOR REFERENCE ONLY	01/26/22	JC	LB
1	REVISED AS PER CUSTOMER'S COMMENT	02/14/22	JC	LB

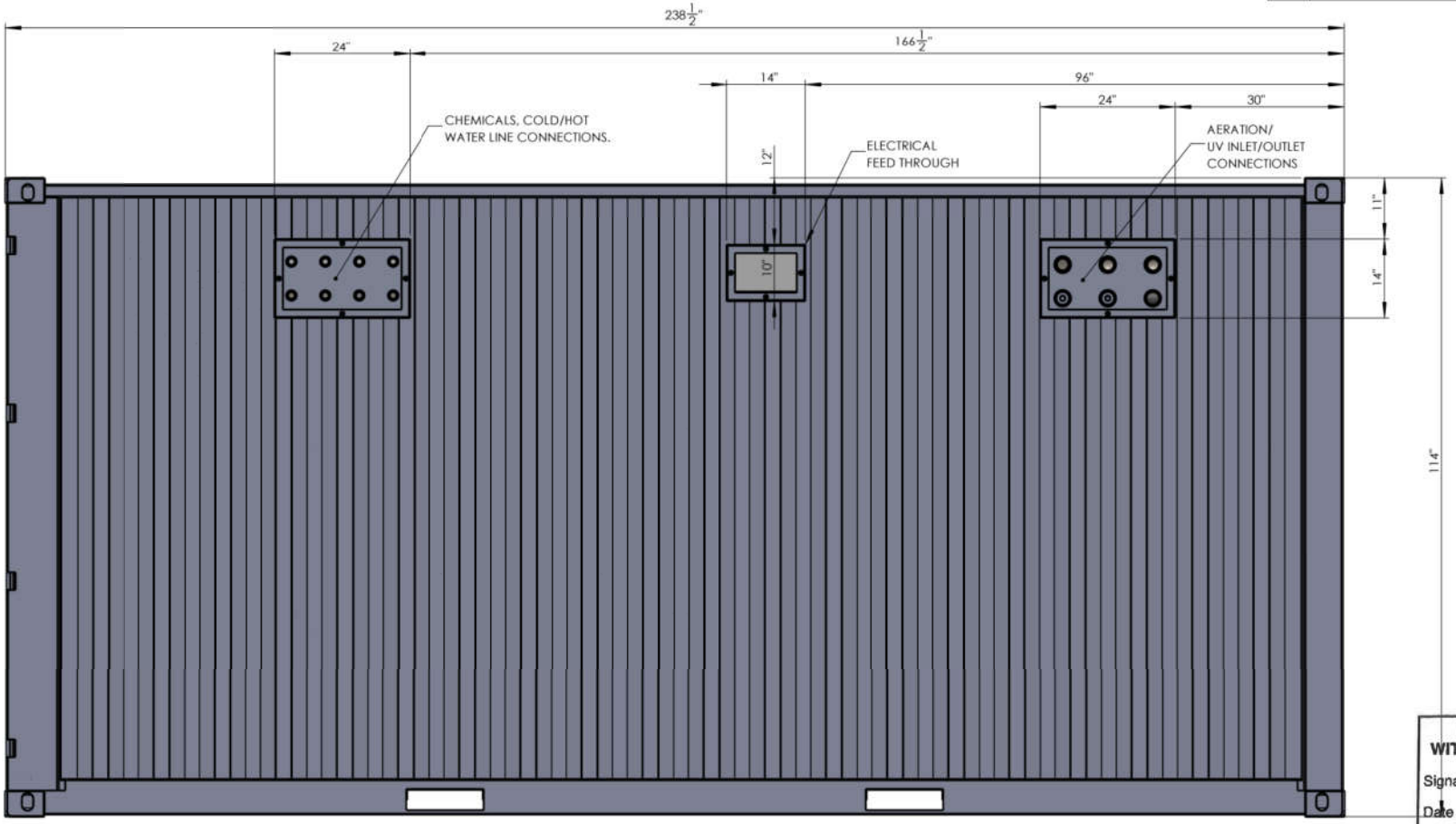

REAR VIEW

REGISTERED PROFESSIONAL ENGINEER
D.A. WITZEL
LICENSEE
04/01/2022
NT/NU

WITZEL DYCE ENGINEERING INC.
WDE PROJECT No. 14842-100
FOR STRUCTURAL DESIGN ONLY.

GENERAL NOTES:
1. REFER TO ATTACHED SHIPPING CONTAINER SPECIFICATIONS FOR STRUCTURAL SIZING.

PERMIT TO PRACTICE
WITZEL DYCE ENGINEERING INC.
Signature
Date 04/01/2022
PERMIT NUMBER: P 1478
NT/NU Association of Professional Engineers and Geoscientists

H2FLOW EQUIPMENT INC.
WATER AND WASTEWATER TREATMENT EQUIPMENT
560 OSTER LANE, CONCORD, ON L4K 2C1 CANADA
TEL: (905) 660-9775 FAX: (905) 660-9744
www.h2flow.com

THIS DRAWING IS THE PROPERTY OF H2FLOW EQUIPMENT INC. AND SHALL NOT BE COPIED OR TRANSFERRED WITHOUT THE WRITTEN CONSENT OF H2FLOW EQUIPMENT INC.

DRAWN BY: JC	DATE: 01/26/22	PROJECT NAME: EUREKA STP CONTAINERIZED MBBR NUNAVUT	TITLE: CONTAINER NO.2 LAYOUT w/PIPING
APP'D BY: LB	DATE: 01/26/22		DRAWING No.: Q-28520-52-10
SCALE: NTS		ALL DIMENSION ARE IN INCHES UNLESS OTHERWISE SPECIFIED	SHEET 3 OF 5
			REV: 1

REV	DESCRIPTION	DATE	BY	APP'D
0	FOR REFERENCE ONLY	01/26/22	JC	LB
1	REVISED AS PER CUSTOMER'S COMMENT	02/14/22	JC	LB

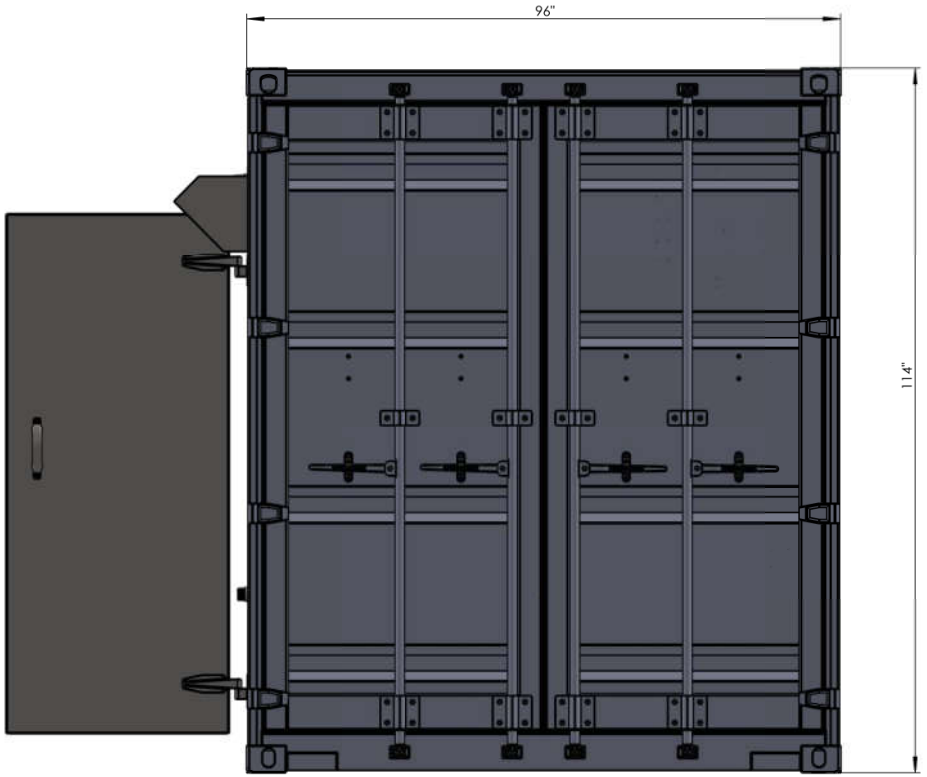

RIGHT VIEW

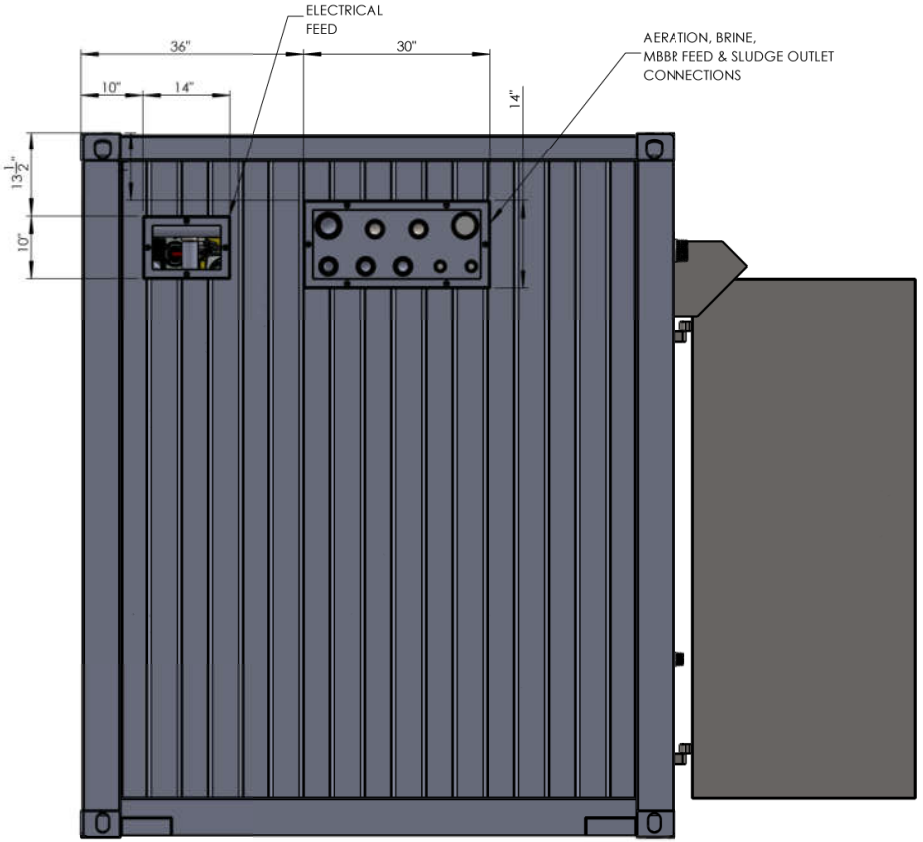

LEFT VIEW

REGISTERED PROFESSIONAL ENGINEER
B.A. WITZEL
LICENSEE
04/01/2022
NT/NU

WITZEL DYCE ENGINEERING INC.
WDE PROJECT No. 14842-100
FOR STRUCTURAL DESIGN ONLY.

GENERAL NOTES:
1. REFER TO ATTACHED SHIPPING CONTAINER SPECIFICATIONS FOR STRUCTURAL SIZING.

PERMIT TO PRACTICE
WITZEL DYCE ENGINEERING INC.
Signature
Date 04/01/2022
PERMIT NUMBER: P 1478
NT/NU Association of Professional Engineers and Geoscientists

H2FLOW EQUIPMENT INC.
WATER AND WASTEWATER TREATMENT EQUIPMENT
580 OSTER LANE, CONCORD, ON L4K 2C1 CANADA
TEL: (905) 660-9775 FAX: (905) 660-9744
www.h2flow.com

THIS DRAWING IS THE PROPERTY OF H2FLOW EQUIPMENT INC. AND SHALL NOT BE COPIED OR TRANSFERRED WITHOUT THE WRITTEN CONSENT OF H2FLOW EQUIPMENT INC.

DRAWN BY: JC	DATE: 01/26/22	PROJECT NAME: EUREKA STP CONTAINERIZED MBBR NUNAVUT	TITLE: CONTAINER NO.2 LAYOUT w/PIPING
APP'D BY: LB	DATE: 01/26/22		DRAWING No.: Q-28520-52-10
SCALE: NTS		ALL DIMENSION ARE IN INCHES UNLESS OTHERWISE SPECIFIED	REV: 1
			SHEET 4 OF 5

REV	DESCRIPTION	DATE	BY	APP'D
0	FOR REFERENCE ONLY	01/26/22	JC	LB
1	REVISED AS PER CUSTOMER'S COMMENT	02/14/22	JC	LB

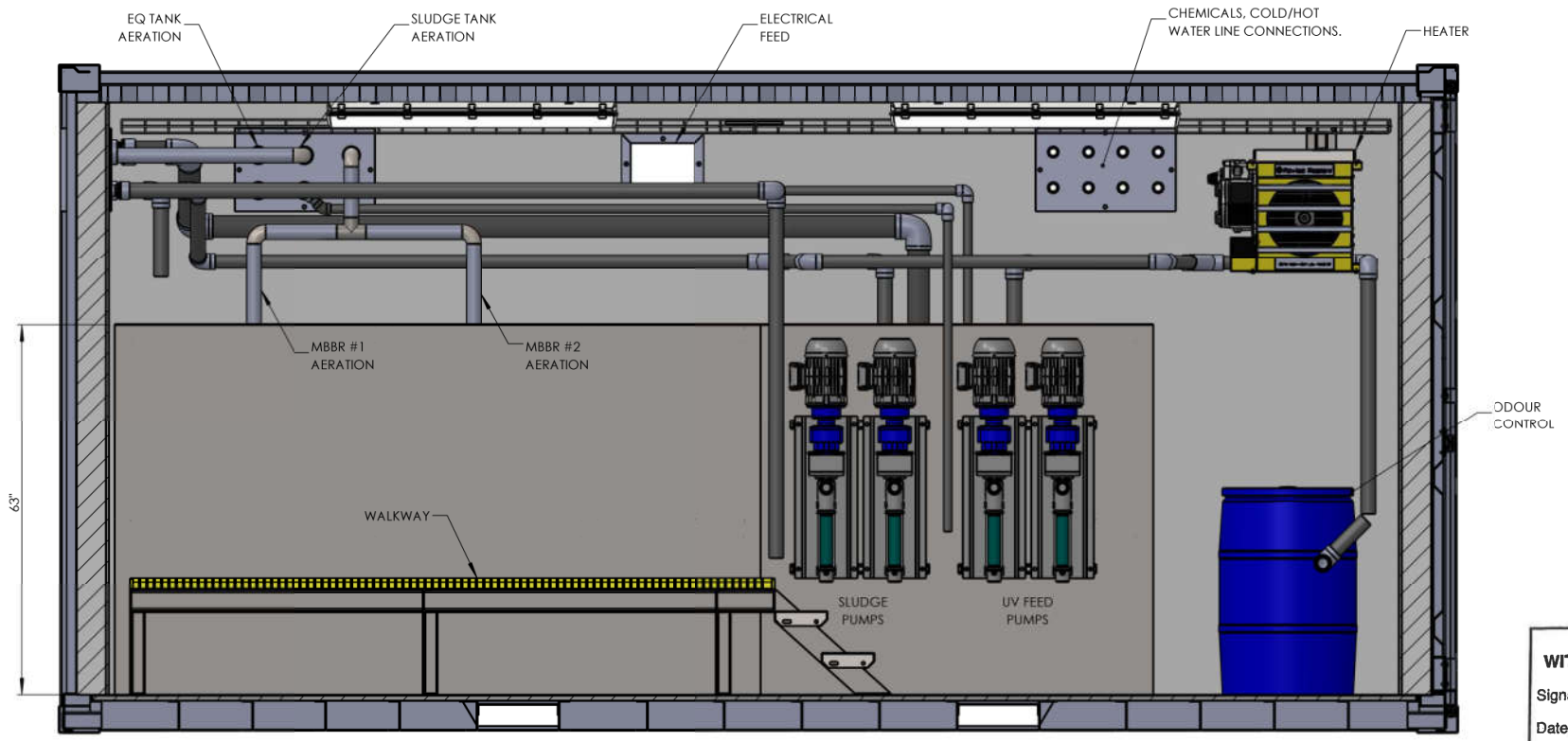

SECTION A-A
SCALE 1 : 20

REGISTERED PROFESSIONAL ENGINEER
D.A. WITZEL
LICENSEE
04/01/2022
NT/NU

WITZEL DYCE ENGINEERING INC.
WDE PROJECT No. 14842-100
FOR STRUCTURAL DESIGN ONLY.

GENERAL NOTES:
1. REFER TO ATTACHED SHIPPING CONTAINER SPECIFICATIONS FOR STRUCTURAL SIZING.

PERMIT TO PRACTICE
WITZEL DYCE ENGINEERING INC.
Signature
Date 04/01/2022
PERMIT NUMBER: P 1478
NT/NU Association of Professional Engineers and Geoscientists

H2FLOW EQUIPMENT INC.
WATER AND WASTEWATER TREATMENT EQUIPMENT
580 OSTER LANE, CONCORD, ON L4K 2C1 CANADA
TEL: (905) 660-9775 FAX: (905) 660-9744
www.h2flow.com

THIS DRAWING IS THE PROPERTY OF H2FLOW EQUIPMENT INC. AND SHALL NOT BE COPIED OR TRANSFERRED WITHOUT THE WRITTEN CONSENT OF H2FLOW EQUIPMENT INC.

DRAWN BY: JC	DATE: 01/26/22	PROJECT NAME: EUREKA STP CONTAINERIZED MBBR NUNAVUT	TITLE: CONTAINER NO.2 LAYOUT w/PIPING
APP'D BY: LB	DATE: 01/26/22		DRAWING No.: Q-28520-52-10
SCALE: NTS		ALL DIMENSION ARE IN INCHES UNLESS OTHERWISE SPECIFIED	REV: 1
			SHEET 5 OF 5

REV	DESCRIPTION	DATE	BY	APP'D
0	FOR REFERENCE ONLY	01/26/22	JC	LB
1	REVISED AS PER COMMENTS	02/18/22	JC	LB

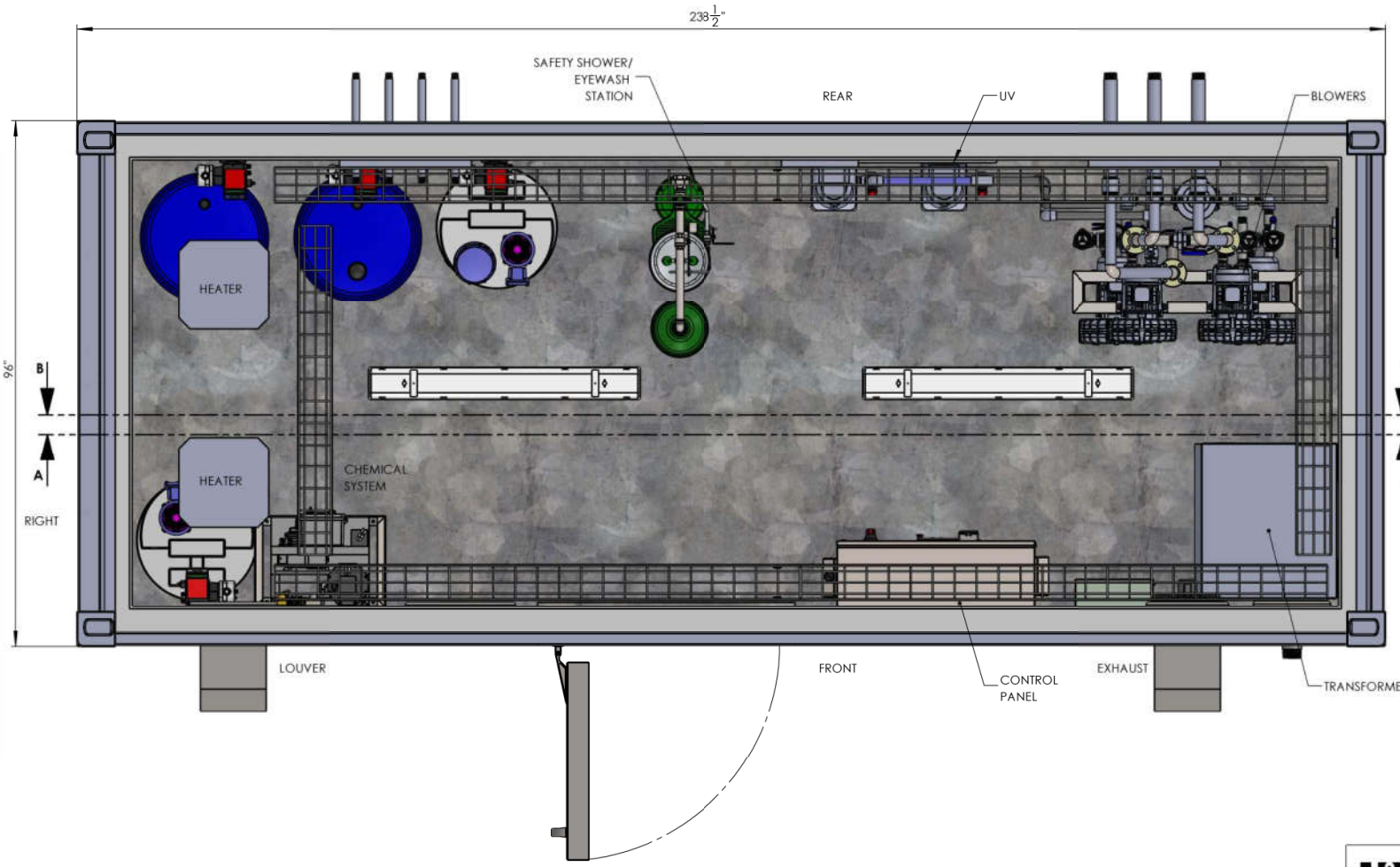

CONTAINER NO.3
PLAN VIEW

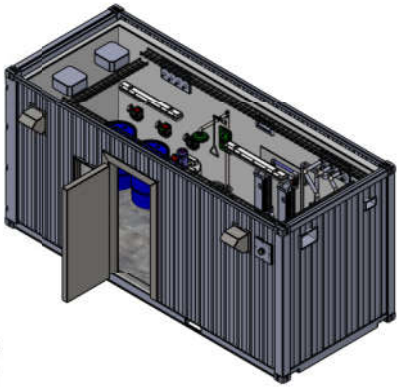

REGISTERED PROFESSIONAL ENGINEER
B.A. WITZEL
LICENSEE
04/01/2022
NT/NU

WITZEL DYCE ENGINEERING INC.
WDE PROJECT No. 14842-100
FOR STRUCTURAL DESIGN ONLY.

GENERAL NOTES:
1. REFER TO ATTACHED SHIPPING CONTAINER SPECIFICATIONS FOR STRUCTURAL SIZING.

PERMIT TO PRACTICE
WITZEL DYCE ENGINEERING INC.
Signature
Date 04/01/2022
PERMIT NUMBER: P 1478
NT/NU Association of Professional Engineers and Geoscientists

H2FLOW EQUIPMENT INC.
WATER AND WASTEWATER TREATMENT EQUIPMENT
580 OSTER LANE, CONCORD, ON L4K 2C1 CANADA
TEL: (905) 660-9775 FAX: (905) 660-9744
www.h2flow.com

THIS DRAWING IS THE PROPERTY OF H2FLOW EQUIPMENT INC. AND SHALL NOT BE COPIED OR TRANSFERRED WITHOUT THE WRITTEN CONSENT OF H2FLOW EQUIPMENT INC.

DRAWN BY: JC	DATE: 01/26/22	PROJECT NAME: EUREKA STP CONTAINERIZED MBBR NUNAVUT	TITLE: CONTAINER NO.3 LAYOUT w/PIPING
APP'D BY: LB	DATE: 01/26/22		DRAWING No.: Q-28520-53-10
SCALE: NTS		ALL DIMENSION ARE IN INCHES UNLESS OTHERWISE SPECIFIED	SHEET 1 OF 6
			REV: 1

REV	DESCRIPTION	DATE	BY	APP'D
0	FOR REFERENCE ONLY	01/26/22	JC	LB
1	REVISED AS PER COMMENTS	02/18/22	JC	LB

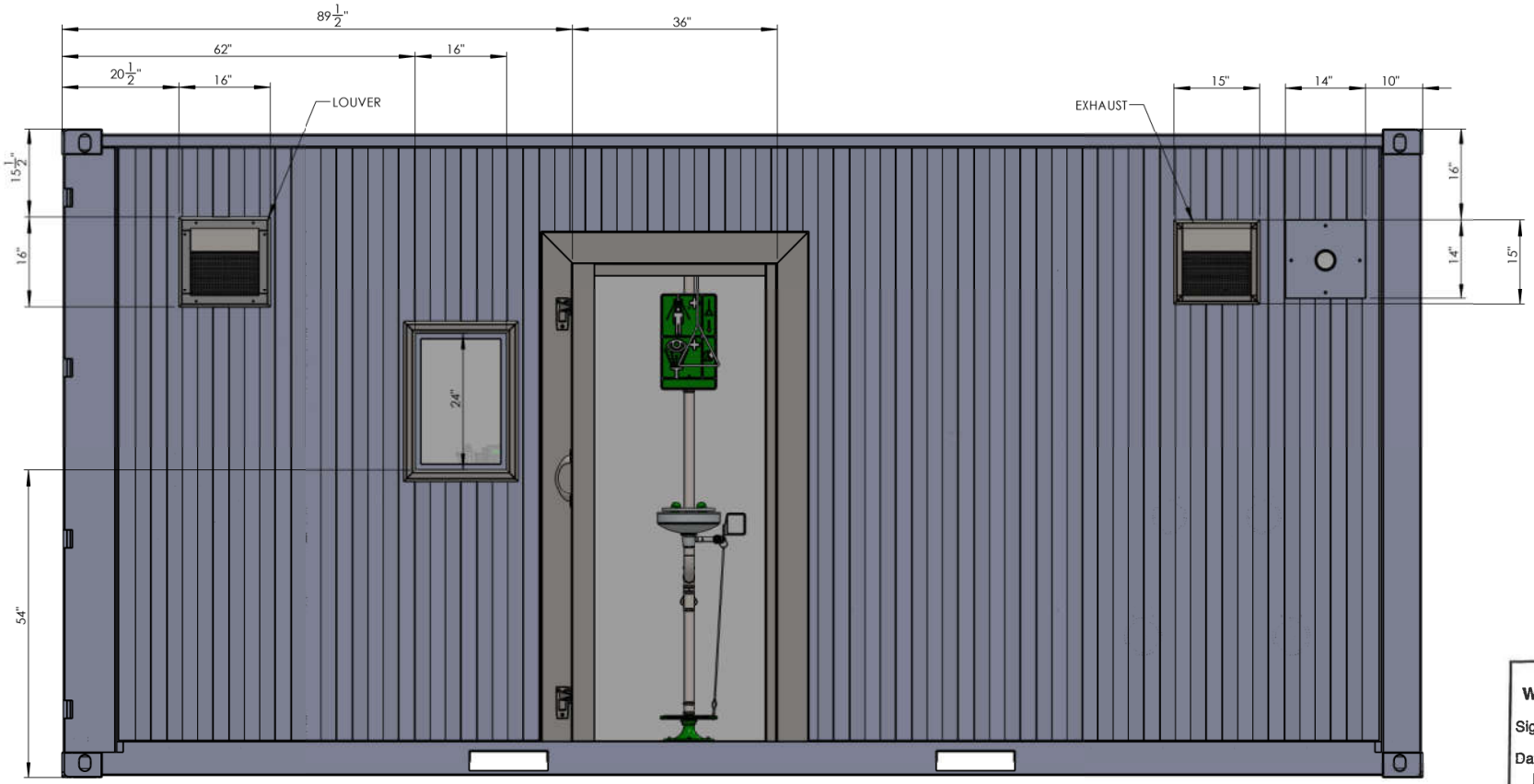

FRONT VIEW

REGISTERED PROFESSIONAL ENGINEER
D.A. WITZEL
LICENSEE
04/01/2022
NT/NU

WITZEL DYCE ENGINEERING INC.
WDE PROJECT No. 14842-100
FOR STRUCTURAL DESIGN ONLY.

GENERAL NOTES:
1. REFER TO ATTACHED SHIPPING CONTAINER SPECIFICATIONS FOR STRUCTURAL SIZING.

PERMIT TO PRACTICE
WITZEL DYCE ENGINEERING INC.
Signature
Date 04/01/2022
PERMIT NUMBER: P 1478
NT/NU Association of Professional Engineers and Geoscientists

H2FLOW EQUIPMENT INC.
WATER AND WASTEWATER TREATMENT EQUIPMENT
580 OSTER LANE, CONCORD, ON L4K 2C1 CANADA
TEL: (905) 660-9775 FAX: (905) 660-9744
www.h2flow.com

THIS DRAWING IS THE PROPERTY OF H2FLOW EQUIPMENT INC. AND SHALL NOT BE COPIED OR TRANSFERRED WITHOUT THE WRITTEN CONSENT OF H2FLOW EQUIPMENT INC.

DRAWN BY: JC	DATE: 01/26/22	PROJECT NAME: EUREKA STP CONTAINERIZED MBBR NUNAVUT	TITLE: CONTAINER NO.3 LAYOUT w/PIPING
APP'D BY: LB	DATE: 01/26/22		DRAWING No.: Q-28520-53-10
SCALE: NTS		ALL DIMENSION ARE IN INCHES UNLESS OTHERWISE SPECIFIED	REV: 1
			SHEET 2 OF 6

REV	DESCRIPTION	DATE	BY	APP'D
0	FOR REFERENCE ONLY	01/26/22	JC	LB
1	REVISED AS PER COMMENTS	02/18/22	JC	LB

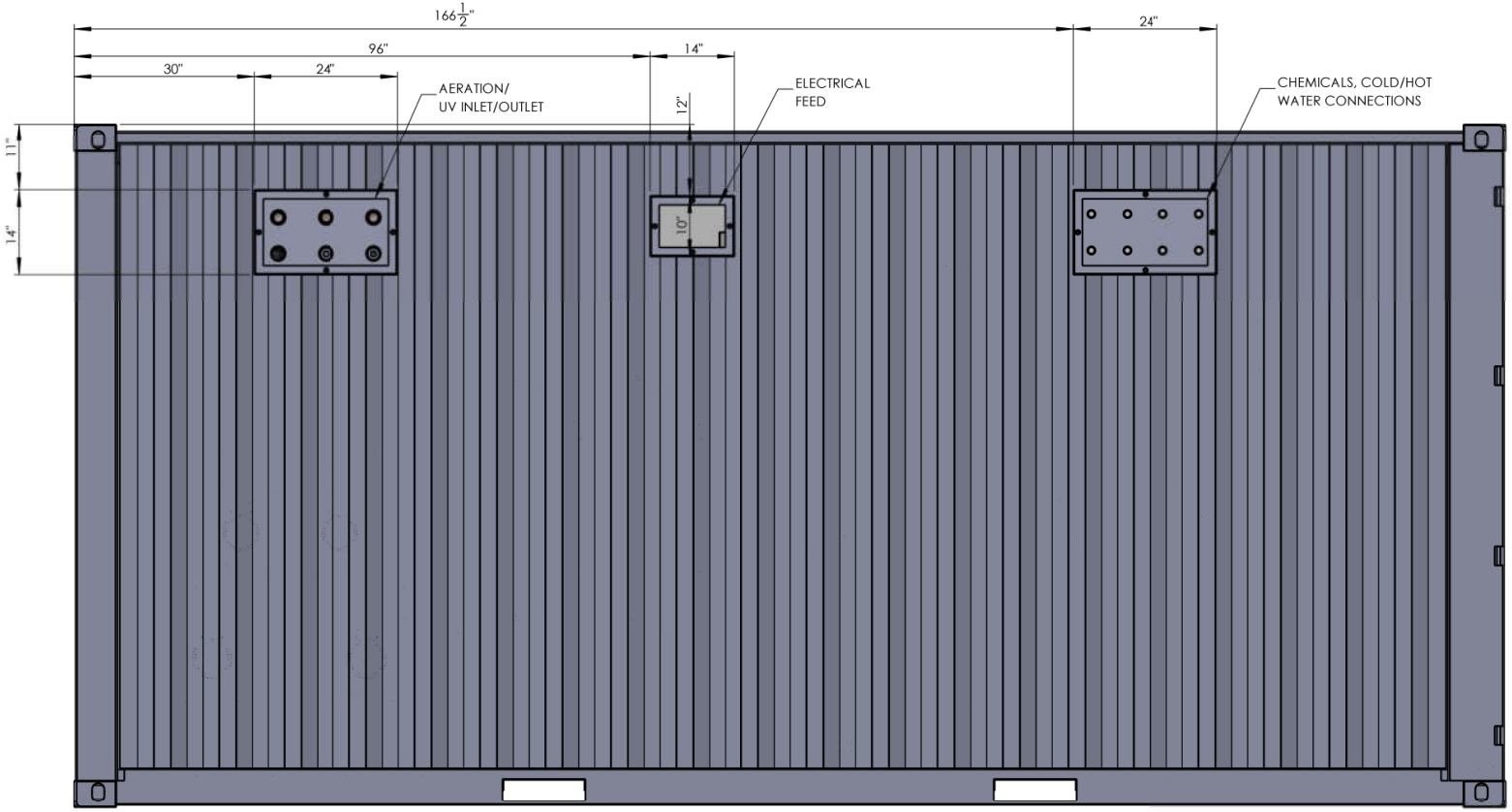

REAR VIEW

REGISTERED PROFESSIONAL ENGINEER
B.A. WITZEL
LICENSEE
04/01/2022
NT/NU

WITZEL DYCE ENGINEERING INC.
WDE PROJECT No. 14842-100
FOR STRUCTURAL DESIGN ONLY.

GENERAL NOTES:
1. REFER TO ATTACHED SHIPPING CONTAINER SPECIFICATIONS FOR STRUCTURAL SIZING.

PERMIT TO PRACTICE
WITZEL DYCE ENGINEERING INC.
Signature
Date 04/01/2022
PERMIT NUMBER: P 1478
NT/NU Association of Professional Engineers and Geoscientists

H2FLOW EQUIPMENT INC.

WATER AND WASTEWATER TREATMENT EQUIPMENT
580 OSTER LANE, CONCORD, ON L4K 2C1 CANADA
TEL: (905) 660-9775 FAX: (905) 660-9744
www.h2flow.com

THIS DRAWING IS THE PROPERTY OF H2FLOW EQUIPMENT INC. AND SHALL NOT BE COPIED OR TRANSFERRED WITHOUT THE WRITTEN CONSENT OF H2FLOW EQUIPMENT INC.

DRAWN BY: JC	DATE: 01/26/22	PROJECT NAME: EUREKA STP CONTAINERIZED MBBR NUNAVUT	TITLE: CONTAINER NO.3 LAYOUT w/PIPING
APP'D BY: LB	DATE: 01/26/22		DRAWING No.: Q-28520-53-10
SCALE: NTS		ALL DIMENSION ARE IN INCHES UNLESS OTHERWISE SPECIFIED	REV: 1
			SHEET 3 OF 6

REV	DESCRIPTION	DATE	BY	APP'D
0	FOR REFERENCE ONLY	01/26/22	JC	LB
1	REVISED AS PER COMMENTS	02/18/22	JC	LB

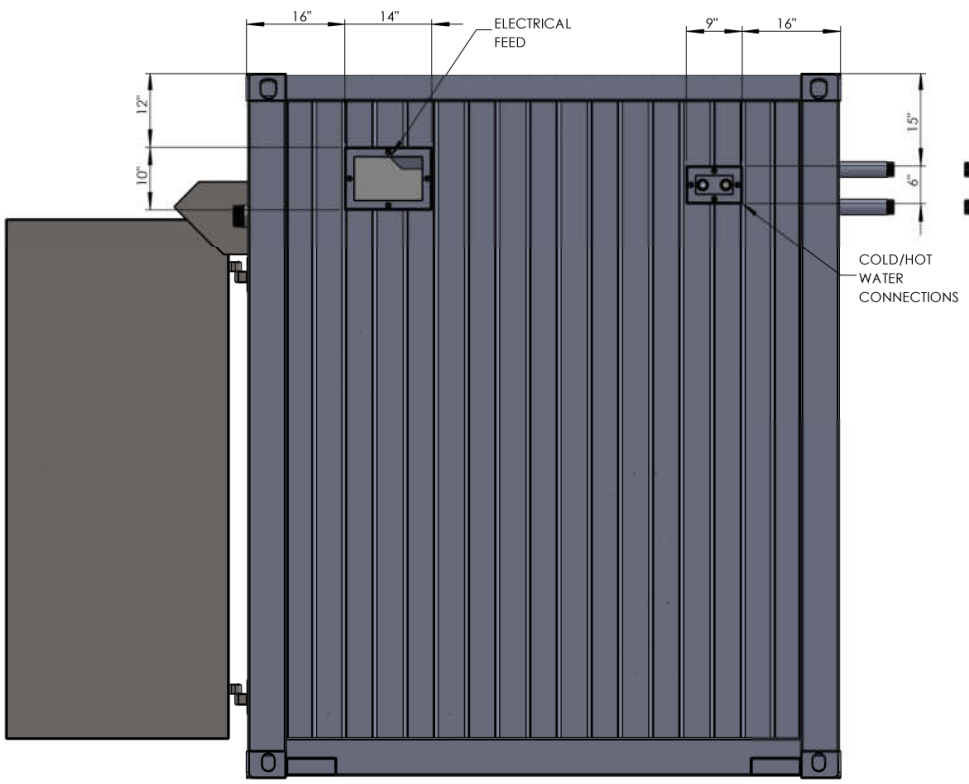

LEFT VIEW

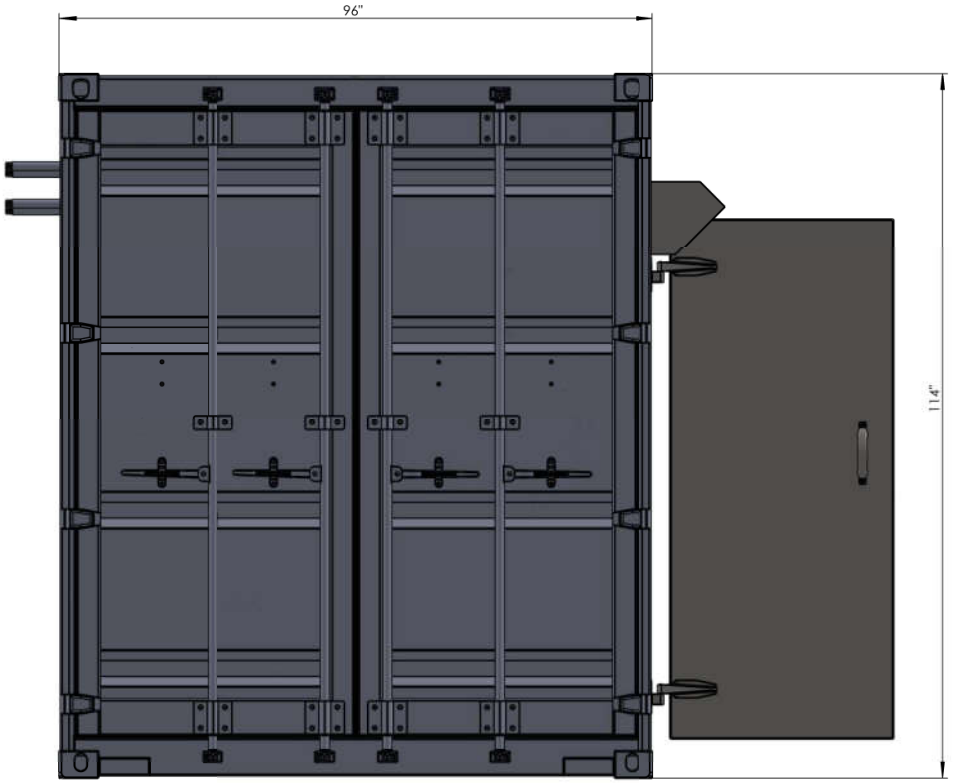

RIGHT VIEW
SCALE 1 : 20

REGISTERED PROFESSIONAL ENGINEER
B.A. WITZEL
LICENSEE
04/01/2022
NT/NU

WITZEL DYCE ENGINEERING INC.
WDE PROJECT No. 14842-100
FOR STRUCTURAL DESIGN ONLY.

GENERAL NOTES:
1. REFER TO ATTACHED SHIPPING CONTAINER SPECIFICATIONS FOR STRUCTURAL SIZING.

PERMIT TO PRACTICE
WITZEL DYCE ENGINEERING INC.
Signature
Date 04/01/2022
PERMIT NUMBER: P 1478
NT/NU Association of Professional Engineers and Geoscientists

H2FLOW EQUIPMENT INC.

WATER AND WASTEWATER TREATMENT EQUIPMENT
580 OSTER LANE, CONCORD, ON L4K 2C1 CANADA
TEL: (905) 660-9775 FAX: (905) 660-9744
www.h2flow.com

THIS DRAWING IS THE PROPERTY OF H2FLOW EQUIPMENT INC. AND SHALL NOT BE COPIED OR TRANSFERRED WITHOUT THE WRITTEN CONSENT OF H2FLOW EQUIPMENT INC.

DRAWN BY: JC	DATE: 01/26/22	PROJECT NAME: EUREKA STP CONTAINERIZED MBBR NUNAVUT	TITLE: CONTAINER NO.3 LAYOUT w/PIPING
APP'D BY: LB	DATE: 01/26/22		DRAWING No.: Q-28520-53-10
SCALE: NTS			REV: 1
		ALL DIMENSION ARE IN INCHES UNLESS OTHERWISE SPECIFIED	SHEET 4 OF 6

REV	DESCRIPTION	DATE	BY	APP'D
0	FOR REFERENCE ONLY	01/26/22	JC	LB
1	REVISED AS PER COMMENTS	02/18/22	JC	LB

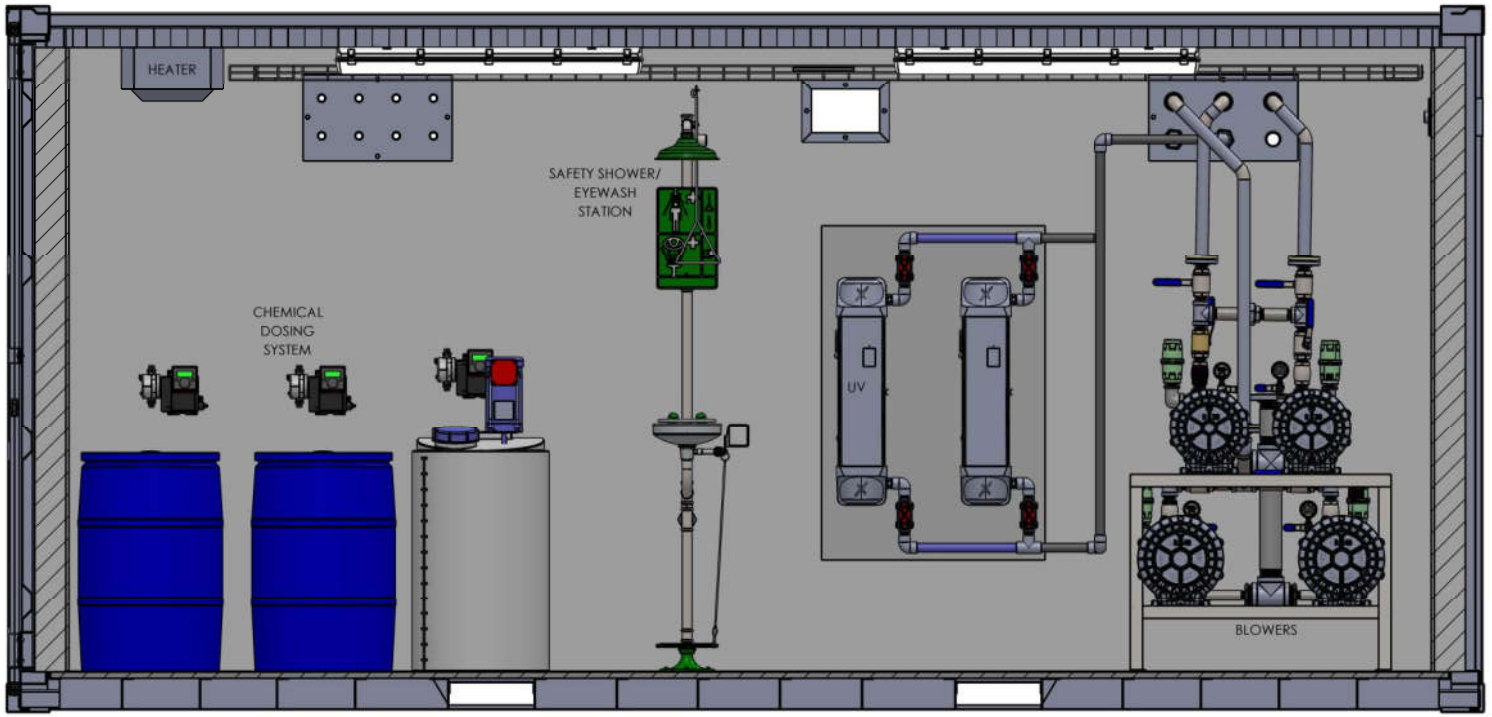

SECTION A-A

REGISTERED PROFESSIONAL ENGINEER
B.A. WITZEL
LICENSEE
04/01/2022
NT/NU

WITZEL DYCE ENGINEERING INC.
WDE PROJECT No. 14842-100
FOR STRUCTURAL DESIGN ONLY.

GENERAL NOTES:
1. REFER TO ATTACHED SHIPPING CONTAINER SPECIFICATIONS FOR STRUCTURAL SIZING.

PERMIT TO PRACTICE
WITZEL DYCE ENGINEERING INC.
Signature
Date 04/01/2022
PERMIT NUMBER: P 1478
NT/NU Association of Professional Engineers and Geoscientists

H2FLOW EQUIPMENT INC.

WATER AND WASTEWATER TREATMENT EQUIPMENT
580 OSTER LANE, CONCORD, ON L4K 2C1 CANADA
TEL: (905) 660-9775 FAX: (905) 660-9744
www.h2flow.com

THIS DRAWING IS THE PROPERTY OF H2FLOW EQUIPMENT INC. AND SHALL NOT BE COPIED OR TRANSFERRED WITHOUT THE WRITTEN CONSENT OF H2FLOW EQUIPMENT INC.

DRAWN BY: JC	DATE: 01/26/22	PROJECT NAME: EUREKA STP CONTAINERIZED MBBR NUNAVUT	TITLE: CONTAINER NO.3 LAYOUT w/PIPING
APP'D BY: LB	DATE: 01/26/22		DRAWING No.: Q-28520-53-10
SCALE: NTS		ALL DIMENSION ARE IN INCHES UNLESS OTHERWISE SPECIFIED	REV: 1
			SHEET 5 OF 6

REV	DESCRIPTION	DATE	BY	APP'D
0	FOR REFERENCE ONLY	01/26/22	JC	LB
1	REVISED AS PER COMMENTS	02/18/22	JC	LB

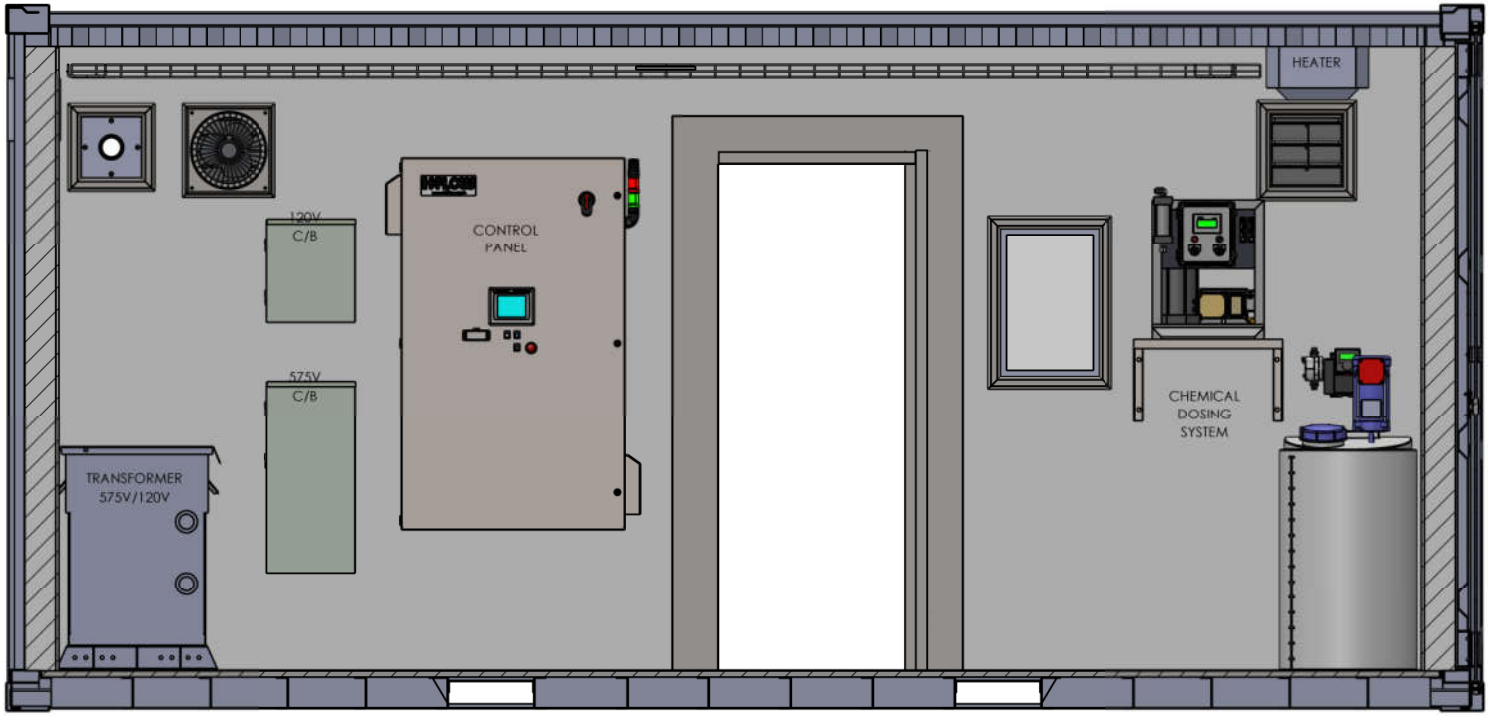

SECTION B-B

REGISTERED PROFESSIONAL ENGINEER
D.A. WITZEL
LICENSEE
04/01/2022
NT/NU

WITZEL DYCE ENGINEERING INC.
WDE PROJECT No. 14842-100
FOR STRUCTURAL DESIGN ONLY.

GENERAL NOTES:
1. REFER TO ATTACHED SHIPPING CONTAINER SPECIFICATIONS FOR STRUCTURAL SIZING.

PERMIT TO PRACTICE
WITZEL DYCE ENGINEERING INC.
Signature
Date 04/01/2022
PERMIT NUMBER: P 1478
NT/NU Association of Professional Engineers and Geoscientists

H2FLOW EQUIPMENT INC.

WATER AND WASTEWATER TREATMENT EQUIPMENT
580 OSTER LANE, CONCORD, ON L4K 2C1 CANADA
TEL: (905) 660-9775 FAX: (905) 660-9744
www.h2flow.com

THIS DRAWING IS THE PROPERTY OF H2FLOW EQUIPMENT INC. AND SHALL NOT BE COPIED OR TRANSFERRED WITHOUT THE WRITTEN CONSENT OF H2FLOW EQUIPMENT INC.

DRAWN BY: JC	DATE: 01/26/22	PROJECT NAME: EUREKA STP CONTAINERIZED MBBR NUNAVUT	TITLE: CONTAINER NO.3 LAYOUT w/PIPING
APP'D BY: LB	DATE: 01/26/22		DRAWING No.: Q-28520-53-10
SCALE: NTS		ALL DIMENSION ARE IN INCHES UNLESS OTHERWISE SPECIFIED	SHEET 6 OF 6
			REV: 1

REV	DESCRIPTION	DATE	BY	APP'D
0	FOR REFERENCE ONLY	01/27/22	JC	LB
1	REVISED AS PER COMMENTS	02/18/22	JC	LB

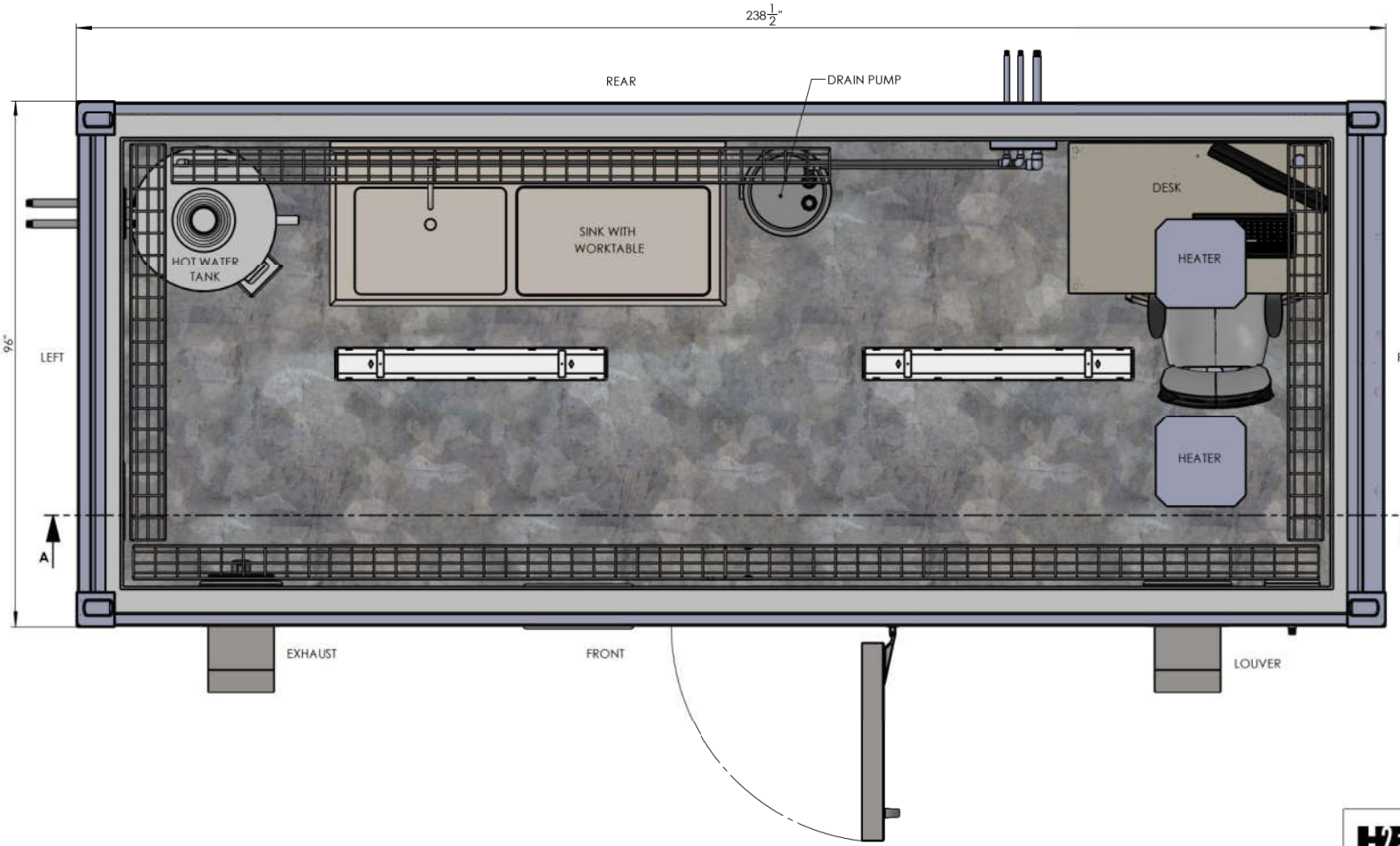

PLAN VIEW

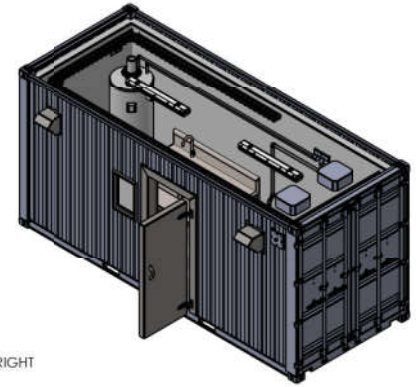

REGISTERED PROFESSIONAL ENGINEER
D.A. WITZEL
LICENSEE
04/01/2022
NT/NU

WITZEL DYCE ENGINEERING INC.
WDE PROJECT No. 14842-100
FOR STRUCTURAL DESIGN ONLY.

GENERAL NOTES:
1. REFER TO ATTACHED SHIPPING CONTAINER SPECIFICATIONS FOR STRUCTURAL SIZING.

PERMIT TO PRACTICE
WITZEL DYCE ENGINEERING INC.
Signature
Date 04/01/2022
PERMIT NUMBER: P 1478
NT/NU Association of Professional Engineers and Geoscientists

H2FLOW EQUIPMENT INC.
WATER AND WASTEWATER TREATMENT EQUIPMENT
580 OSTER LANE, CONCORD, ON L4K 2C1 CANADA
TEL: (905) 660-9775 FAX: (905) 660-9744
www.h2flow.com

THIS DRAWING IS THE PROPERTY OF H2FLOW EQUIPMENT INC. AND SHALL NOT BE COPIED OR TRANSFERRED WITHOUT THE WRITTEN CONSENT OF H2FLOW EQUIPMENT INC.

DRAWN BY: JC	DATE: 01/27/22	PROJECT NAME: EUREKA STP CONTAINERIZED MBBR NUNAVUT	TITLE: CONTAINER NO.4 LAYOUT w/PIPING
APP'D BY: LB	DATE: 01/27/22		DRAWING No.: Q-28520-54-10
SCALE: NTS		ALL DIMENSION ARE IN INCHES UNLESS OTHERWISE SPECIFIED	REV: 1
			SHEET 1 OF 5

REV	DESCRIPTION	DATE	BY	APP'D
0	FOR REFERENCE ONLY	01/27/22	JC	LB
1	REVISED AS PER COMMENTS	02/18/22	JC	LB

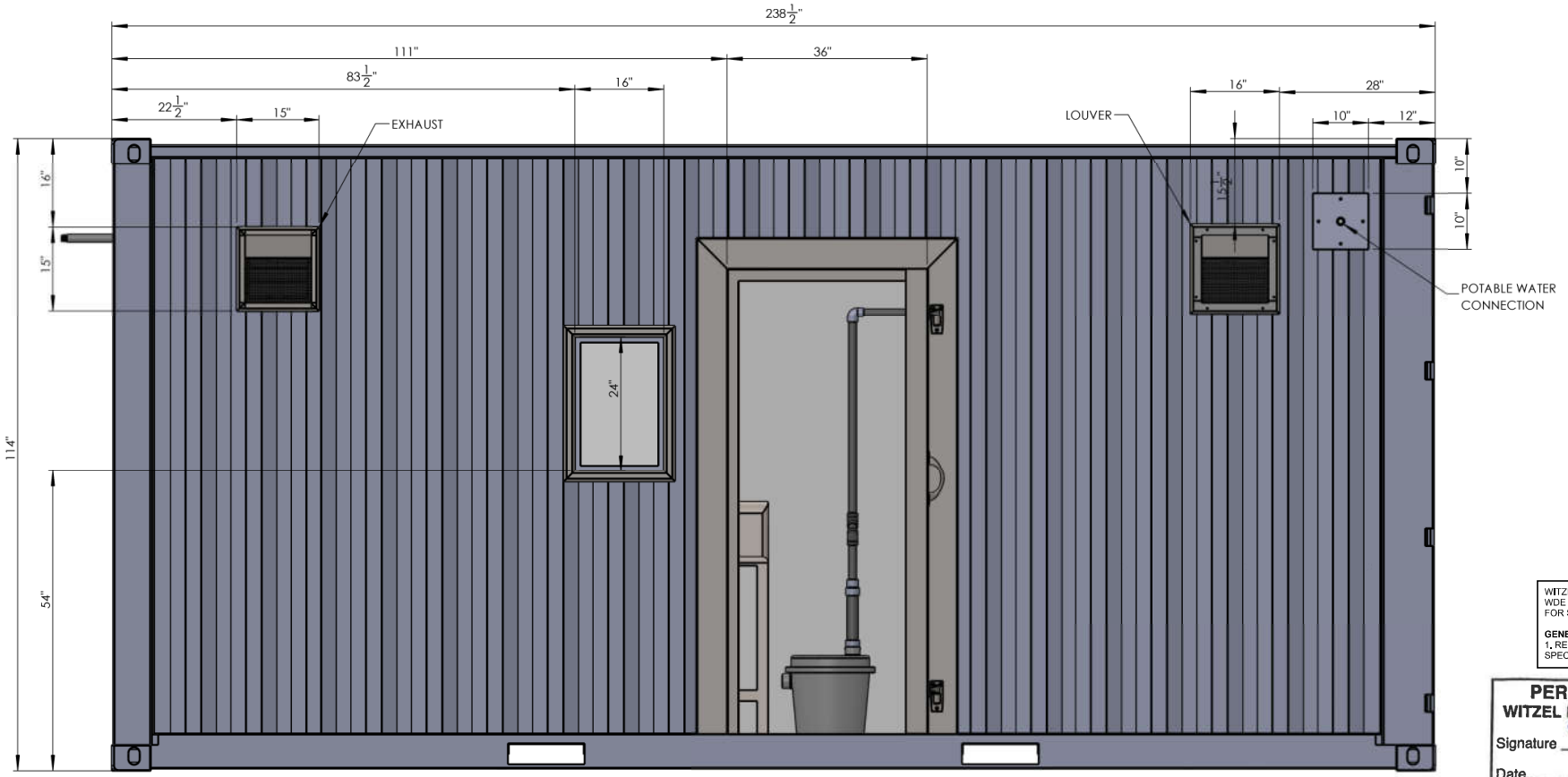

FRONT VIEW

REGISTERED PROFESSIONAL ENGINEER
D.A. WITZEL
LICENSEE
NT/NU
04/01/2022

WITZEL DYCE ENGINEERING INC.
WDE PROJECT No. 14842-100
FOR STRUCTURAL DESIGN ONLY.

GENERAL NOTES:
1. REFER TO ATTACHED SHIPPING CONTAINER SPECIFICATIONS FOR STRUCTURAL SIZING.

PERMIT TO PRACTICE
WITZEL DYCE ENGINEERING INC.
Signature
Date 04/01/2022
PERMIT NUMBER: P 1478
NT/NU Association of Professional Engineers and Geoscientists

H2FLOW EQUIPMENT INC.
WATER AND WASTEWATER TREATMENT EQUIPMENT
580 OSTER LANE, CONCORD, ON L4K 2C1 CANADA
TEL: (905) 660-9775 FAX: (905) 660-9744
www.h2flow.com

THIS DRAWING IS THE PROPERTY OF H2FLOW EQUIPMENT INC. AND SHALL NOT BE COPIED OR TRANSFERRED WITHOUT THE WRITTEN CONSENT OF H2FLOW EQUIPMENT INC.

DRAWN BY: JC	DATE: 01/27/22	PROJECT NAME: EUREKA STP CONTAINERIZED MBBR NUNAVUT	TITLE: CONTAINER NO.4 LAYOUT w/PIPING
APP'D BY: LB	DATE: 01/27/22		DRAWING No.: Q-28520-54-10
SCALE: NTS		ALL DIMENSION ARE IN INCHES UNLESS OTHERWISE SPECIFIED	REV: 1
			SHEET 2 OF 5

REV	DESCRIPTION	DATE	BY	APP'D
0	FOR REFERENCE ONLY	01/27/22	JC	LB
1	REVISED AS PER COMMENTS	02/18/22	JC	LB

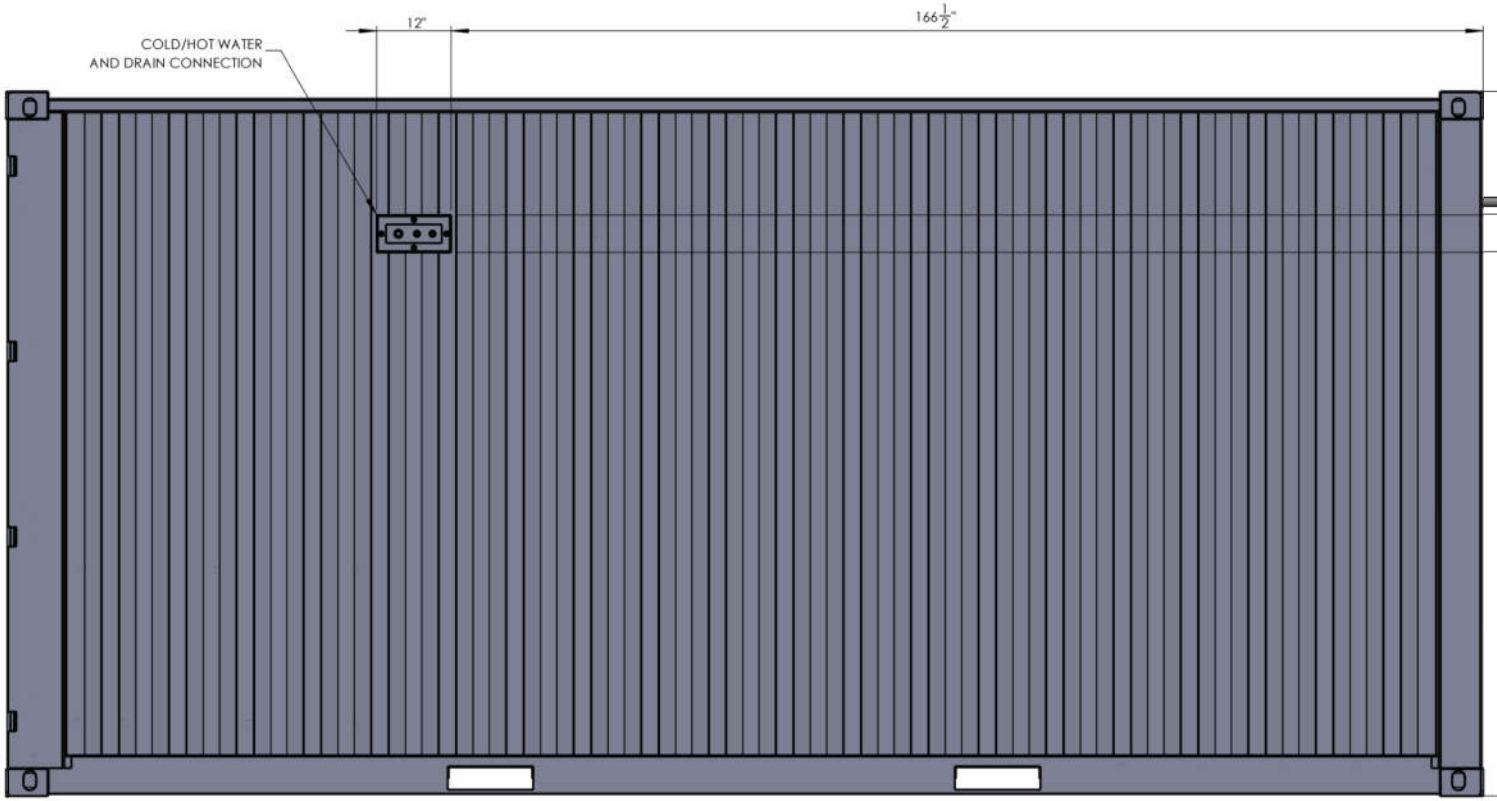

REAR VIEW

REGISTERED PROFESSIONAL ENGINEER
D.A. WITZEL
LICENSEE
04/01/2022
NT/NU

WITZEL DYCE ENGINEERING INC.
WDE PROJECT No. 14842-100
FOR STRUCTURAL DESIGN ONLY.

GENERAL NOTES:
1. REFER TO ATTACHED SHIPPING CONTAINER SPECIFICATIONS FOR STRUCTURAL SIZING.

PERMIT TO PRACTICE
WITZEL DYCE ENGINEERING INC.
Signature
Date 04/01/2022
PERMIT NUMBER: P 1478
NT/NU Association of Professional Engineers and Geoscientists

H2FLOW EQUIPMENT INC.

WATER AND WASTEWATER TREATMENT EQUIPMENT
560 OSTER LANE, CONCORD, ON L4K 2C1 CANADA
TEL: (905) 660-9775 FAX: (905) 660-9744
www.h2flow.com

THIS DRAWING IS THE PROPERTY OF H2FLOW EQUIPMENT INC. AND SHALL NOT BE COPIED OR TRANSFERRED WITHOUT THE WRITTEN CONSENT OF H2FLOW EQUIPMENT INC.

DRAWN BY: JC	DATE: 01/27/22	PROJECT NAME: EUREKA STP CONTAINERIZED MBBR NUNAVUT	TITLE: CONTAINER NO.4 LAYOUT w/PIPING
APP'D BY: LB	DATE: 01/27/22		DRAWING No.: Q-28520-54-10
SCALE: NTS		ALL DIMENSION ARE IN INCHES UNLESS OTHERWISE SPECIFIED	REV: 1
			SHEET 3 OF 5

REV	DESCRIPTION	DATE	BY	APP'D
0	FOR REFERENCE ONLY	01/27/22	JC	LB
1	REVISED AS PER COMMENTS	02/18/22	JC	LB

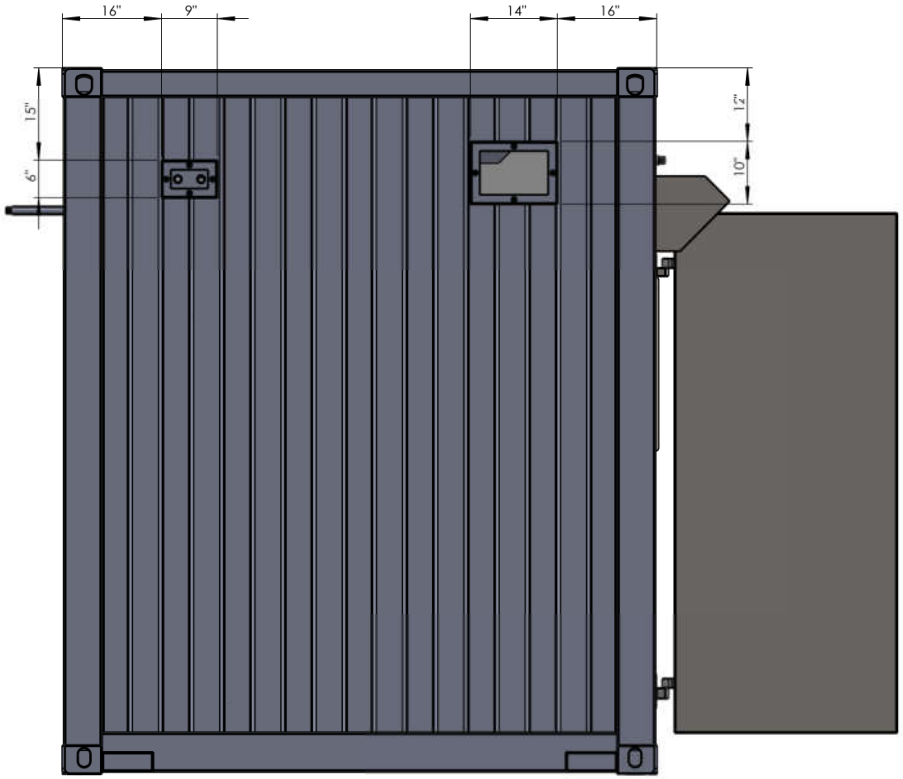

RIGHT VIEW

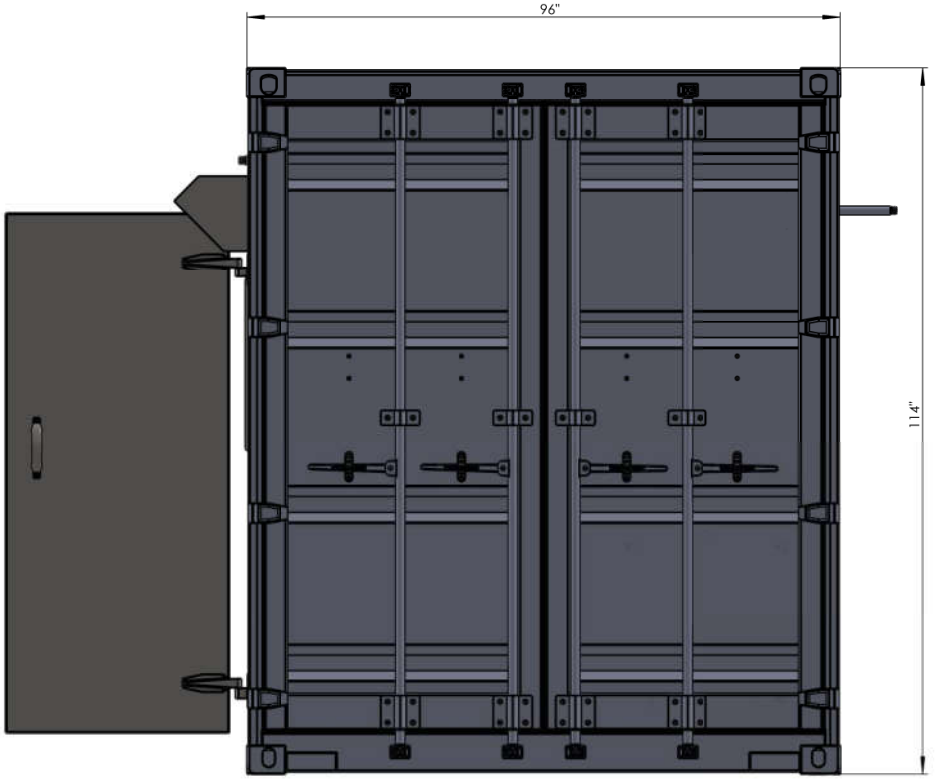

LEFT VIEW

REGISTERED PROFESSIONAL ENGINEER
B.A. WITZEL
LICENSEE
04/01/2022
NT/NU

WITZEL DYCE ENGINEERING INC.
WDE PROJECT No. 14842-100
FOR STRUCTURAL DESIGN ONLY.

GENERAL NOTES:
1. REFER TO ATTACHED SHIPPING CONTAINER SPECIFICATIONS FOR STRUCTURAL SIZING.

PERMIT TO PRACTICE
WITZEL DYCE ENGINEERING INC.
Signature
Date 04/01/2022
PERMIT NUMBER: P 1478
NT/NU Association of Professional Engineers and Geoscientists

H2FLOW EQUIPMENT INC.

WATER AND WASTEWATER TREATMENT EQUIPMENT
580 OSTER LANE, CONCORD, ON L4K 2C1 CANADA
TEL: (905) 660-9775 FAX: (905) 660-9744
www.h2flow.com

THIS DRAWING IS THE PROPERTY OF H2FLOW EQUIPMENT INC. AND SHALL NOT BE COPIED OR TRANSFERRED WITHOUT THE WRITTEN CONSENT OF H2FLOW EQUIPMENT INC.

DRAWN BY: JC	DATE: 01/27/22	PROJECT NAME: EUREKA STP CONTAINERIZED MBBR NUNAVUT	TITLE: CONTAINER NO.4 LAYOUT w/PIPING
APP'D BY: LB	DATE: 01/27/22		DRAWING No.: Q-28520-54-10
SCALE: NTS			REV: 1
		ALL DIMENSION ARE IN INCHES UNLESS OTHERWISE SPECIFIED	SHEET 4 OF 5

REV	DESCRIPTION	DATE	BY	APP'D
0	FOR REFERENCE ONLY	01/27/22	JC	LB
1	REVISED AS PER COMMENTS	02/18/22	JC	LB

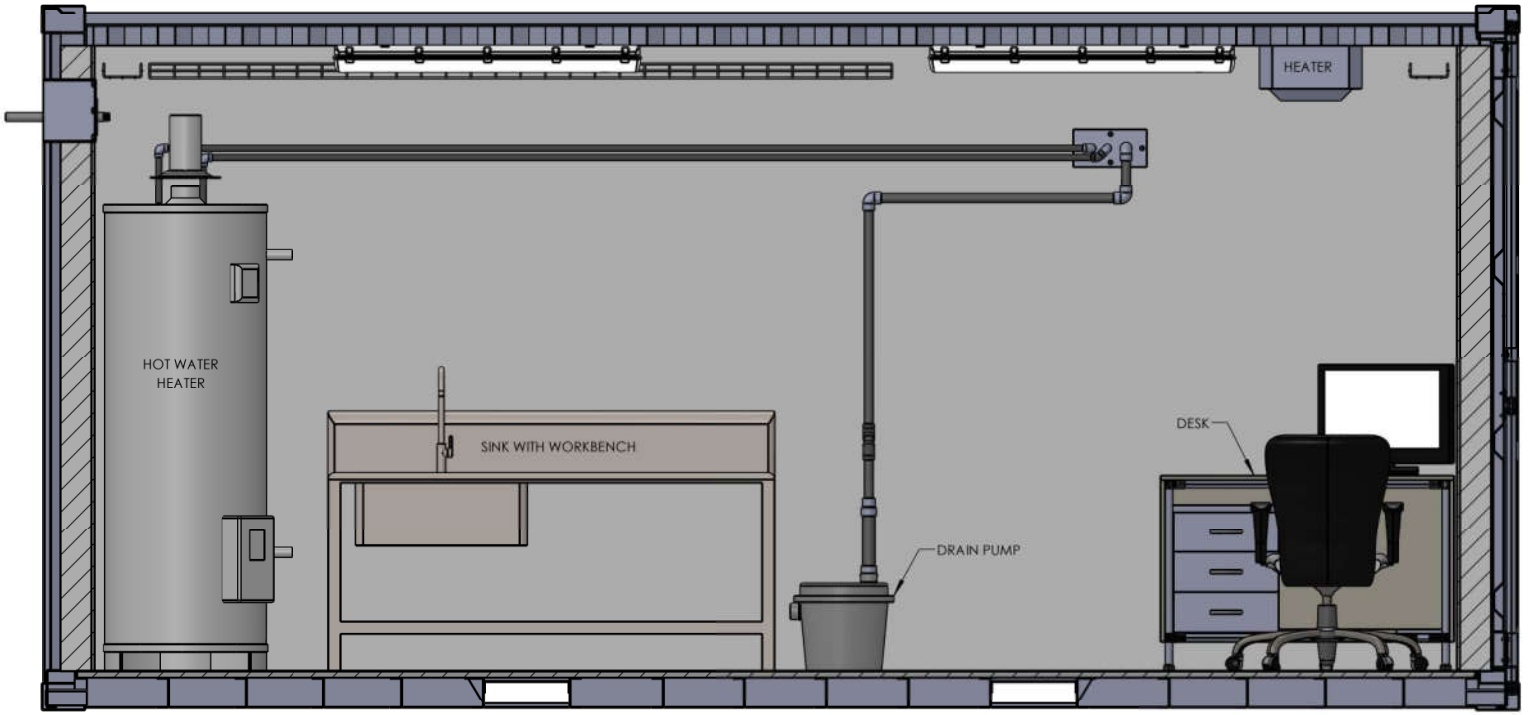

SECTION A-A

REGISTERED PROFESSIONAL ENGINEER
B.A. WITZEL
LICENSEE
04/01/2022
NT/NU

WITZEL DYCE ENGINEERING INC.
WDE PROJECT No. 14842-100
FOR STRUCTURAL DESIGN ONLY.

GENERAL NOTES:
1. REFER TO ATTACHED SHIPPING CONTAINER SPECIFICATIONS FOR STRUCTURAL SIZING.

PERMIT TO PRACTICE
WITZEL DYCE ENGINEERING INC.
Signature
Date 04/01/2022
PERMIT NUMBER: P 1478
NT/NU Association of Professional Engineers and Geoscientists

H2FLOW EQUIPMENT INC.
WATER AND WASTEWATER TREATMENT EQUIPMENT
580 OSTER LANE, CONCORD, ON L4K 2C1 CANADA
TEL: (905) 660-9775 FAX: (905) 660-9744
www.h2flow.com

THIS DRAWING IS THE PROPERTY OF H2FLOW EQUIPMENT INC. AND SHALL NOT BE COPIED OR TRANSFERRED WITHOUT THE WRITTEN CONSENT OF H2FLOW EQUIPMENT INC.

DRAWN BY: JC	DATE: 01/27/22	PROJECT NAME: EUREKA STP CONTAINERIZED MBBR NUNAVUT	TITLE: CONTAINER NO.4 LAYOUT w/PIPING
APP'D BY: LB	DATE: 01/27/22		DRAWING No.: Q-28520-54-10
SCALE: NTS		ALL DIMENSION ARE IN INCHES UNLESS OTHERWISE SPECIFIED	REV: 1
			SHEET 5 OF 5

Section 5.3

System Nameplates

580 Oster Lane, Vaughan, Ontario, Canada L4K 2C1
Tel: (905) 660-9775 Email: info@h2flow.com www.h2flow.com

SYSTEM NAMEPLATE WASTEWATER TREATMENT SYSTEM

Model: CX-027 Serial: Q-285-20 Date: JULY 2022

CAUTION/ATTENTION:

THIS EQUIPMENT CREATES A HAZARDOUS CLASSIFIED AREA.
HAZARDOUS AREA CLASSIFIED STAMPED H2FLOW DRAWING Q-28520-50-20 Rev. 0,
MUST BE CONSULTED FOR INSTALLATION, DISTANCES,
VENTILATION REQUIREMENTS, AND USE.

CET ÉQUIPEMENT CRÉE UNE ZONE CLASSIFIÉE DANGEREUSE.
RAPPORT / DESSINS CLASSÉS SUR LES ZONES DANGEREUSES Q-28520-50-20 Rev. 0,
PAR H2FLOW DOIT ÊTRE CONSULTÉ
POUR L'INSTALLATION, LES DISTANCES, LES EXIGENCES DE VENTILATION ET L'UTILISATION.

Hazardous Location Rating: Class I Div 1 Groups C & D T1

Note: These containers has a section referred to as 'CONTAINER #1 & CONTAINER #2' by the manufacturers building drawings that has a Hazardous Location defined as Class I, Division 1 Groups C, D T1.

X- There are Conditions of Use associated with this equipment – See Below.
-MUSTS FOLLOW HAZLOC ROOM CONTAINER #1 & #2 ENTRY PROCEDURE BEFORE ENTERING

Évaluation des emplacements dangereux **: Class I Div 1 Groups C & D T1**

Remarque : Ce conteneur comporte une section appelée « CONTAINER #1 & CONTAINER #2» par les dessins de construction des fabricants qui a un emplacement dangereux défini comme Classe I, Division 1 Groupes C, D T1.

X- Il existe des conditions d'utilisation associées à cet équipement - voir ci-dessous.
-DOIT SUIVRE LA PROCÉDURE D'ENTRÉE DANS LA CONTAINER #1&#2 DE LA SALLE AVANT D'ENTRER

Environmental Ratings: Internal 10°C ≤ T amb ≤ 25°C External -40°C ≤ T amb ≤ 40°C Outdoor Use Only.
Electrical Ratings: 600VAC 200A 3Phase/3Wire 60Hz Power Distribution Panel PDP-01-00
Largest Motor : 3HP SCCR : 5kA
*See Schematics : H2F-28520-40-00 (SINGLE LINE DIAGRAM)
Drawing # 2633 (CONTROL PANEL SCHEMATIC)

CAUTION/ATTENTION

THIS EQUIPMENT MAY REQUIRE ADDITIONAL GROUNDING OR BONDING AS PER CANADIAN ELECTRICAL CODE.

CET ÉQUIPEMENT PEUT NÉCESSITER UNE MISE À LA TERRE OU UNE LIAISON SUPPLÉMENTAIRE CONFORMÉMENT AU CODE CANADIEN DE L'ÉLECTRICITÉ.

SYSTEM NAMEPLATE- Wastewater Treatment System

QPS FIELD CERTIFCIATION FILE NUMBER QFC2033-1 & QFE2249-1

MANUFACTURER: H2Flow Equipment

MODEL: CX-027

SERIAL: Q-285-20

HAZARDOUS CLASSIFED AREAs (Container #'s 1 & 2)

NON-HAZARDOUS AREA – (Containers #'s 3 & 4)

Containers # & 4 - CLASS 1 DIVISON 1 GROUPS C & D T1

AREA CLASSIFICATION DRAWING - Q-28520-50-20 Rev. 0,

ELECTRICAL RATINGS

MBBR Panel – 575 Volts AC 60 Hz 50 A 3-Ph SCCR 5.0 KA

Main 120 Volt distribution Panel Board – Main Breaker 125 Amps-Load Supplied By 45.0 KVA Transformer

Transformer – 600 Volts AC 60 Hz 45.0 KVA 3-Ph - Output 208Y/120 Volts

DWG Reference – H2Flow Eureka STP Containerize MBBR – Project # 2633

SUITABLE FOR USE ON A CIRCUIT CAPABLE OF DELIVERING NOT MORE THAN 5KA RMS SYMMETRCIAL AMPERES AT 575 Volts

THE FOLLWING IS INCLUDED IN THE FIELD CERTIFCATION/FIELD EVALUATION

QCC555558 – Container # 1 (Hazardous Area)

QCC555559– Container # 2 (Hazardous Area)

QCC555560 – IS Enclosure Located In Container # 3

QCC555562 – IS Enclosure Located In Container # 3.

QE2020051 – Container # 3 (Non-Hazardous Area)

QE2020052-Container # 4 (Non-Hazardous Area)

Container Number 1 –Wastewater Treatment System

QFC2033-1

MANUFACTURER: H2Flow Equipment

HAZARDOUS AREA CLASSIFIED STAMPED H2FLOW DRAWING - Q-28520-50-20 Rev. 0,

MODEL: CX-027 (Container # 1)

SERIAL: Q-285-20

Classified Area – Class I Div 1 Groups C & D T1 (Installation In A Zone 1 Area -Ex IIB T1 Gb Is Subject To Acceptance By The Local Authority Having Jurisdiction)

ELECTRICAL RATINGS FOR Container # 1

575 Volts AC 60 HZ, 3-Ph

Container Has Multiple Loads All Fed From Container # 3 – Refer to Dwgs H2Flow Eureka STP Containerize MBBR Project # 2633

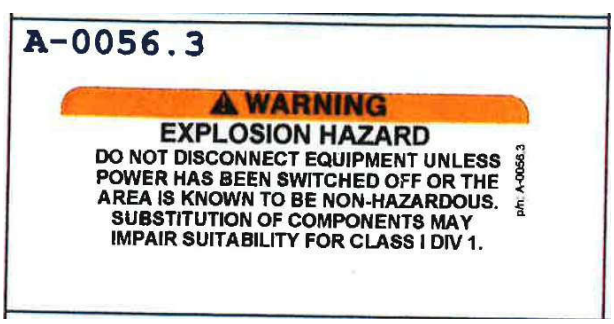

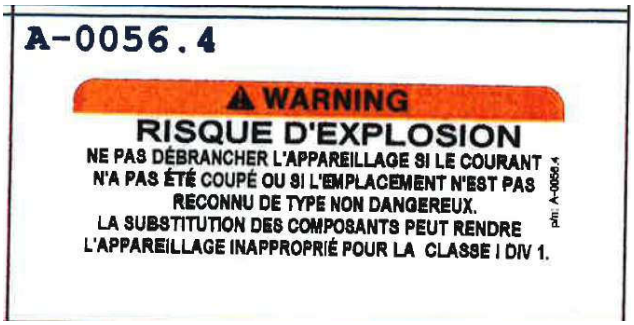

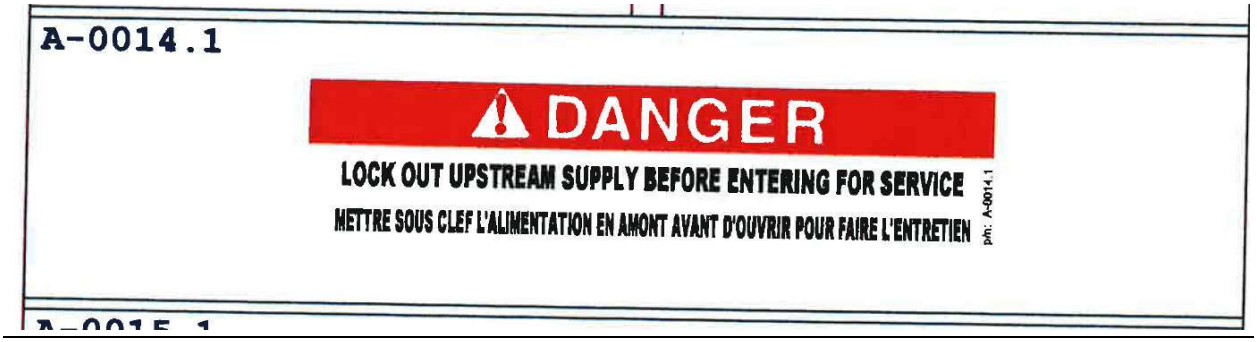

Container Number 2 –Wastewater Treatment System

MANUFACTURER: H2Flow Equipment

QFC2033-1

HAZARDOUS AREA CLASSIFIED STAMPED H2FLOW DRAWING - Q-28520-50-20 Rev. 0,

MODEL: CX-027 (Container # 2)

SERIAL: Q-285-20

Classified Area – Class I Div 1 Groups C & D T1 (Installation In A Zone 1 Area -Ex IIB T1 Gb Is Subject To Acceptance By The Local Authority Having Jurisdiction)

ELECTRICAL RATINGS FOR Container # 2

575 Volts AC 60 HZ, 3-Ph

Container Has Multiple Loads All Fed From Container # 3 – Refer to Dwgs H2Flow Eureka STP Containerize MBBR Project # 2633

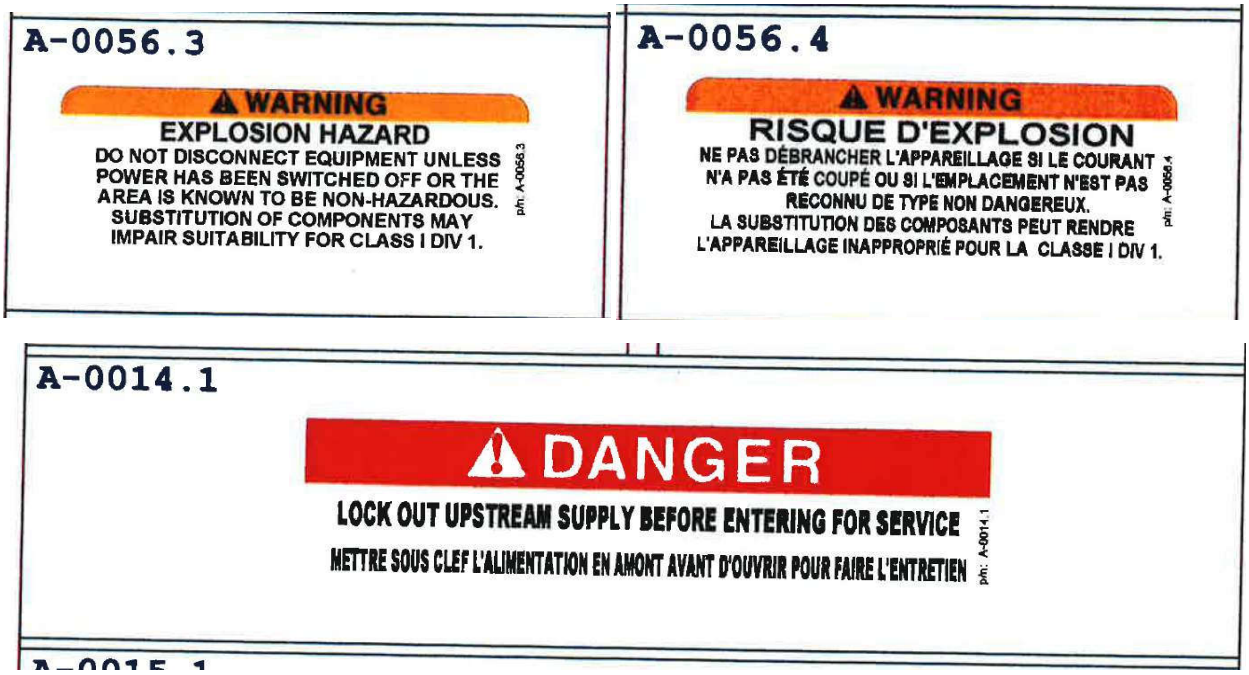

Container Number 3 –Wastewater Treatment System

MANUFACTURER: H2Flow Equipment

QFE50249-1

HAZARDOUS AREA CLASSIFIED STAMPED H2FLOW DRAWING - Q-28520-50-20 Rev. 0,

MODEL: CX-027 (Container # 3)

SERIAL: Q-285-20

Non-Hazardous Area

ELECTRICAL RATINGS FOR Container # 3

MBBR Panel – 575 Volts AC 60 Hz 50 A 3-Ph SCCR 5.0 KA

Main 120 Volt distribution Panel Board – Main Breaker 125 Amps-Load Supplied By 45.0 KVA Transformer

Transformer – 600 Volts AC 60 Hz 45.0 KVA 3-Ph O/P 208Y/120 Volts

Refer to Electrical Dwg – H2Flow Eureka STP Containerize MBBR – Project 2633

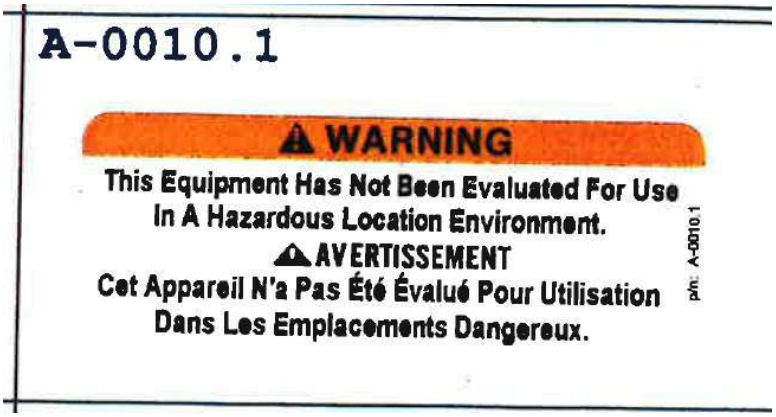



Container Number 4 –Wastewater Treatment System

MANUFACTURER: H2Flow Equipment

QFE50249-1

HAZARDOUS AREA CLASSIFIED STAMPED H2FLOW DRAWING - Q-28520-50-20 Rev. 0,

MODEL: CX-027 (Container # 4)

SERIAL: Q-285-20

Non-Hazardous Area

ELECTRICAL RATINGS FOR Container # 4

575 Volts AC 60 HZ, 3-Ph

Container Has Multiple Loads All Fed From Container # 3 – Refer to Dwgs H2Flow Eureka STP Containerize MBBR Project # 2633

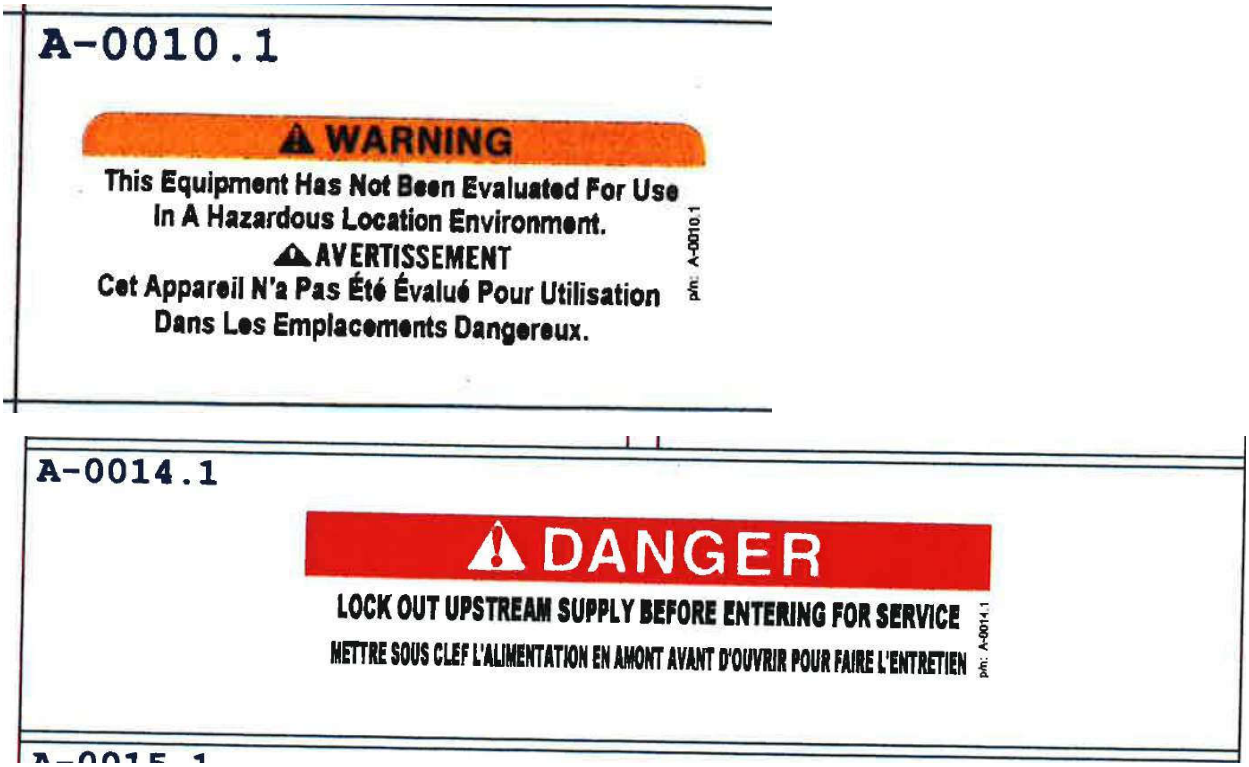

Section 5.4

Components List

Critical Components in Hazardous Location (Container # 1)

Item	Component Description	Manufacturer	Model/Type Identification	Technical Data				Canadian Accepted Mark (CSA, cUL, cETL etc) Or Other Approval Means (IECEx certificate number)
				Electrical Ratings	Haz-Loc Ratings (Class, Div/Zone)	Ambient Temp. (T_1°C≤T_a≤T_2°C)		
						T_1	T_2	
1	Screen Motors M-01-01/02	WEG	XC.33504	575Vac/3Ph/60Hz	Class 1 Div. 1			CSA
2	MBBR Feed Pumps (M-01-10/11)	WEG	CC029A	575Vac/3Ph/60Hz	Class 1 Div. 1			cCSAus
3	Sludge Transfer Pumps (M-02-04/05)	WEG	CC029A	575Vac/3Ph/60Hz	Class 1 Div. 1			cCSAus
6	Screen Local Control Stations (LCS-01-01/02)	KIllark	FX Series	120Vac/1Ph/60Hz	Class 1 Div. 1			CSA
7	Space Heater	Hazloc Heaters	XEU1-12-075-600360-B-Y-B	575Vac/3Ph/60Hz	Class 1 Div. 1&2			cCSAus
8	Motor Disconnect	Hubbell (Killark)	B7NFD13A	575Vac/3Ph/60Hz	Class 1 Div. 1			cCSAus
9	Lighting Fixture	Hubbell	EPL-LP-24-LED	120Vac/1Ph/60Hz	Class 1 Div. 1&2			CSA
10	Exhaust Fan	CANARM	SD08-XPF	120Vac/1Ph/60Hz	Class 1 Div. 1			CSA
11	Screen Tank Float Level Switches	KTech	FS401E-4	24Vdc	Class 1 Div. 1			cUL, cETLus
	EQ and Sludge Holding Tanks Level Transducer	Endress + Hauser	FMX21-CE111HGF15A+PR	24Vdc	Class 1 Div. 1 Intrinsic Safe			cCSAus
12	EQ and Sludge Holding Tanks Float Level Switches	Flygt	ENM 10	24Vdc	Class 1 Div. 1 Intrinsic Safe			CSA
13	Sludge Dewatering Screen Flow Meters	Endress + Hauser	5P5B25CDDBAAAAFBLL2 DEA1K0AA1+PC	24Vdc	Class 1 Div. 1			cCSAus
12	Damper Actuator	Belimo	BLMOLF120SUS+ZS-260	120Vac/1Ph/60Hz	Class 1 Div. 1			CSA
14	Screen Tank Float Level Switches	KTech	SM4001-CXEP	24Vdc	Class 1 Div. 1			cUL, cETLus
15	Odor Control Motors	Baldor	MXS0502P	120Vac/1Ph/60Hz	Class 1 Div. 1			CSA
16	Temperature Transmitter (Not Installed)	Dwyer	TTE-1-02-W-LCD	24Vdc	Class 1 Div. 1			IECEx
17	Methane (CH4) Transmitter (Not Installed)	Honeywell	XNXUTSIRNIV1	24Vdc	Class 1 Div. 1			CSA
18	H2S Transmitter (Not Installed)	Honeywell	XNXUTSERNNN	24Vdc	Class 1 Div. 1			CSA

Critical Components in Hazardous Location (Container # 2)

Item	Component Description	Manufacturer	Model/Type Identification	Technical Data				Canadian Accepted Mark (CSA, cUL, cETL etc) Or Other Approval Means (IECEx certificate number)
				Electrical Ratings	Haz-Loc Ratings (Class, Div/Zone)	Ambient Temp. (T_1°C≤T_a≤T_2°C)		
						T_1	T_2	
1	Sludge Pumps (M-03-22/23)	WEG	CC029A	575Vac/3Ph/60Hz	Class 1 Div. 1			cCSAus
2	UV Feed Pumps (M-03-05/06)	WEG	CC029A	575Vac/3Ph/60Hz	Class 1 Div. 1			cCSAus
3	Effluent Pumps (M-03-08/09)	Liberty	XLSG200	575Vac/3Ph/60Hz	Class 1 Div. 1			cCSAus
5	Space Heater	Hazloc Heaters	XEU1-12-075-600360-B-Y-B	575Vac/3Ph/60Hz	Class 1 Div. 1&2			cCSAus
6	Motor Disconnect	Hubbell (Killark)	B7NFD13A	575Vac/3Ph/60Hz	Class 1 Div. 1			cCSAus
7	Lighting Fixture	Hubbell	EPL-LP-24-LED	120Vac/1Ph/60Hz	Class 1 Div. 1&2			CSA
8	Exhaust Fan	CANARM	SD08-XPF	120Vac/1Ph/60Hz	Class 1 Div. 1			CSA
9	Transfer Tank and Effluent Tank Float Level Switches	KTech	FS401E-4	24Vdc	Class 1 Div. 1			cUL, cETLus
10	Damper Actuator	Belimo	BLMOLF120SUS+ZS-260	120Vac/1Ph/60Hz	Class 1 Div. 1			CSA
11	Odor Control Motors	Baldor	MXS0502P	120Vac/1Ph/60Hz	Class 1 Div. 1			CSA
12	Temperature Transmitter	Dwyer	TTE-1-02-W-LCD	24Vdc	Class 1 Div. 1			IECEx
13	Methane (CH4) Transmitter (Not Installed)	Honeywell	XNXUTSIRNIV1	24Vdc	Class 1 Div. 1			CSA
14	H2S Transmitter (Not Installed)	Honeywell	XNXUTSERNNN	24Vdc	Class 1 Div. 1			CSA
15	pH Transmitter (Not Installed)	Emerson	5081-P-HT-21-69	24Vdc	Class 1 Div. 1 Intrinsic Safe			CSA
16	DO Transmitter (Not Installed)	Emerson	5081-A-HT-21-69	24Vdc	Class 1 Div. 1 Intrinsic Safe			CSA

QPS Evaluation Services Inc.
Testing, Certification and Field Evaluation Body
Accredited in Canada, the USA, and Internationally

Critical Components Ordinary Location (Container 3)

Item	Component Description (Tag #)	Manufacturer	Model/Type Identification	Technical Data				Canadian Accepted Mark (CSA, cUL, cETL etc) Or Other Approval Means (IECEx certificate number)
				Electrical Ratings	Haz-Loc Ratings (Class, Div/Zone)	Ambient Temp. (T_1°C≤T_a≤T_2°C)		
						T_1	T_2	
1	EQ/Sludge Blowers (BL-04-01/02)	Motori Bonora	3CP80D/2	575Vac/3Ph/60Hz				cURus
2	MBBR Blowers (BL-04-03/04)	Motori Bonora	3CP90LE/2	575Vac/3Ph/60Hz				cURus
3	Electric Heaters (HTR-06-07A/07B)	Ouellet	ODEENSA03036W	575Vac/3Ph/60Hz				CSA
4	Air Compressor (AC-04-05)	Craftsman	CMEC6150	120Vac/1Ph/60Hz				CSA
5	UV System (UVT-05-04/05)	UV Pure	Hallet-500W	120Vac/1Ph/60Hz				cQPSus
6	Chemical Mixer Motors	WEG	FC.50104W01DOE	120Vac/1Ph/60Hz				cULus, cCSAus
7	Dosing Pumps (DP-50-07, DP-50-15)	Grundfos	DDA7.5-16ARPV/T/C F31U7U7BG	120Vac/1Ph/60Hz				cCSAus
8	Polymer Makedown Panel (MP-06-01)	Excell Feeder	6005PSA-MSZX	120Vac/1Ph/60Hz				CSA
9	Effluent Flow Meter (FIT-05-03)	IFM	SM6601	24Vdc				cULus
10	Exhaust Fan	CANARM	SD08	120Vac/1Ph/60Hz				CSA
11	Damper Actuator	Belimo	BLMOLF120SUS	120Vac/1Ph/60Hz				CSA
12	Fresh Air Intake Heater	Thermolec	TER-5-2-208	208Vac/1Ph/60Hz				cCSAus
13	Lighting Fixture	Tamlite	TLVP44040K-UNV	120Vac/1Ph/60Hz				cULus
14	Motor On-Line Starters	EEC	SIDL2A-N4-A-I-PL-S4	120Vac/1Ph/60Hz				cULus
15	Main Control Panel (MCP-01-00)	PowerOn		575Vac/3Ph/60Hz				CSA
16	Power Distribution Panel (PDP-1-00)	Siemens		575Vac/3Ph/60Hz				CSA
17	Low Voltage Distribution Panel (PDP-01-01)	Siemens		120Vac/3Ph/60Hz				CSA
18	Fresh Air Intake Temperature Switch	Dwyer	TSW-150	120Vac/1Ph/60Hz				cURus

QPS Evaluation Services Inc.
Testing, Certification and Field Evaluation Body
Accredited in Canada, the USA, and Internationally

Item	Component Description (Tag #)	Manufacturer	Model/Type Identification	Technical Data				Canadian Accepted Mark (CSA, cUL, cETL etc) Or Other Approval Means (IECEx certificate number)
				Electrical Ratings	Haz-Loc Ratings (Class, Div/Zone)	Ambient Temp. (T_1°C≤T_a≤T_2°C)		
						T_1	T_2	
19	Temperature Transmitter (Not Installed)	Omega	EWSA-PT100-TX	24Vdc				CE

Critical Components Ordinary Location (Container 4)

Item	Component Description (Tag #)	Manufacturer	Model/Type Identification	Technical Data				Canadian Accepted Mark (CSA, cUL, cETL etc) Or Other Approval Means (IECEx certificate number)
				Electrical Ratings	Haz-Loc Ratings (Class, Div/Zone)	Ambient Temp. (T_1°C≤T_a≤T_2°C)		
						T_1	T_2	
1	Water Heater	Rheem	XE40M61ST30B0	208Vac/3Ph/60Hz				cETLus
2	Tankless Water	Rheem	RETEX-06	208ac/3Ph/60Hz				cETLus
3	Electric Heaters (HTR-06-07A/07B)	Ouellet	ODEENSA03036W	575Vac/3Ph/60Hz				CSA
4	Exhaust Fan	CANARM	SD08	120Vac/1Ph/60Hz				CSA
5	Damper Actuator	Belimo	BLMOLF120SUS	120Vac/1Ph/60Hz				CSA
6	Lighting Fixture	Tamlite	TLVP44040K-UNV	120Vac/1Ph/60Hz				cULus
7	Container 1 and 2 Outdoor Light	Killark	NVL230	120Vac/1Ph/60Hz	Class 1 Div. 2			cCSAus
8	Container 3 and 4 Outdoor Light	RAB	WP-LED40-B-VK-BRZ-DIM-PC	120Vac/1Ph/60Hz				UL
9	Temperature Transmitter (Not Installed)	Omega	EWSA-PT100-TX	24Vdc				CE

Section 5.5

Risk Assessment

Project Name: Eureka STP - Containerized MBBR
Project Number: Q-285-20
Document Name: Risk Assessment (Hazardous Area: Class 1 Division 1 Groups C and D T1)

Hazards Identified	Potential injuries/Damage Severity (1, 2 or 3)	Measures to prevent Injury/Damage	Likelihood of Occurrence
Accidental start of Screw Screen (during maintenance)	1, Operator Injury	Emergency Stop installed inside the screen room	Unlikely
Screens A & B to overflow	2, Hazardous wastewater to spill outside the screen room	1. 2 point level monitoring installed. At high level will stop the pump	Medium
EQ tank to overflow	2, Hazardous wastewater to spill outside the screen room	1. Pressure transducer installed for level moniutoring and control. At high level will stop wastewater feed to screens. 2. High Level Float Switch installed. At high level alarm, will stop wasterwater feed to screens (in the event of pressure transducer failure)	Medium
Hydrogen Sulfide (H2S) and Methane (CH4) generated inside the screen room (container 1) and MBBR room (container 2)	2, Injury to operator inside and within the identified hazardous area	1. Exhaust fan installed to run on a scheduled basis to ensure H2S and CH4 is vented out of the screen room and MBBR room on a regular basis. 2. Warning signs provided outside of the screen room and MBBR room.	Medium
Unauthorized personnel entering the Hazardous Rooms (Screen room and MBBR room)	2, Injury to operator	1. Warning sign provided. "Hazardous Area. Authorized Personnel Only"	Medium
Entering the Hazardous Room (Screen room and MBBR room) with a presence of Hydrogen Sulphide (H2S) and Methane (CH4)	2, Injury to operator	1. If Hazloc room exhaust fan is **NOT RUNNING**, adjust the fan OFF timer (located in Blower room/Electrical room - Container 3) to 0 minutes and ensure that the fan is running before entering the Hazloc rooms.	Medium
Entering the Hazardous Room (Screen room and MBBR room) with unpleasant odor	2, Injury to operator	1. Drum activated carbon absorbers are installed in MBBR room and operates on schedule as set up in the PLC program. This is to ensure that no unpleasant odors are present before entering the Hazloc	Medium
Transfer tank to overflow	2, Clarified water to spill outside the MBBR room	1. 4 point float level switches are installed for tank level monitoring and pump control.	Medium
Treated Effluent tank to overflow	2, Treated Effluent water to spill outside the MBBR room	1. 4 point float level switches are installed for tank level monitoring and pump control.	Medium
Hazardous gas migration to non-hazloc containers (containers 3 and 4)	2, Injury to operator	1. Ensure proper sealing of all process piping and electrical penetrations to non-hazloc containers (containers 3 and 4)	Medium

Section 6

Recommended spare parts list

Project Name: Eureka wastewater treatment system
Project Number : Q-285-20

H2FLOW EQUIPMENT INC.

MANUFACTURER'S RECOMMENDED SPARE PARTS LIST

No.	Tag #	Description	Manufacture	Parts	Area
1	SCR-01-01/02	Screw Screen A & B (MCB200) repair kit	H2flow	MCB-200-spare	Container #1
2	LE-01-09	Level Sensor (FMX21)	Endress Hauser	FMX21-CE111HGF15A+PR	Container #1
4	LS-01-08	Level Float Switch	Flygt Xylem	582213	Container #1
5	P-01-10/11	MBBR Feed Pumps: stator f.STP-3 rotor B mechanical seal uNS-Seal joint kit, Netzsch NMO21 B SM PIN SBE/P	Netzsch	4760441 5023297 8016162 P510107	Container #1
6	TT-01-14	Temp. Transmitter	Dwyer	TTE-1-02-W-LCD	Container #1
7	AE-01-15	H2S Sensor	Honeywell	XNXXSH1SS	Container #1
8	AE-01-15A	Wall Mounted Methane Sensor with transmitter combo	Honeywell	XNXAMSIRNIV1	Container #1
9	HTR-01-38	Space Heater	Hazloc	XEU1-12-075-600360-B-Y-B	Container #1
10	LS-02-03	Level Float Switch	Flygt Xylem	582213	Container #1
11	LIT-02-02	Level Sensor (FMX21)	Endress Hauser	FMX21-CE111HGF15A+PR	Container #1
12	P-02-04/05	Sludge Transfer Pumps: stator f.STP-3 rotor B mechanical seal uNS-Seal joint kit, Netzsch NMO21 B SM PIN SBE/P	Netzsch	4760441 5023297 8016162 P510107	Container #1
13	SCR-02-06	Sludge Dewatering bags	Tecknofanghi	SAC-CT	Container #1
14	P-02-07/08	Filtrate Trnasfer Pump: santoprene wet side kit air section kit seat for aro diaphragm pump	DJ Industrial	637427-AA 637428 96572-1	Container #1
15	FAN-02-33	Exhaust Fan	Canarm	SD-08XPF	Container #1
16	P-03-22/23	Sludge Feed Pumps: stator f.STP-3 rotor B mechanical seal uNS-Seal joint kit, Netzsch NMO21 B SM PIN SBE/P	Netzsch	4760441 5023297 8016162 P510107	Container #2
17	LS-03-14/17	Waleco Level Float	Waleco	KIP FS401E-2-2/1.5-16C23O	Container #2
18	P-03-05/06	UV Feed Pumps: stator f.STP-3 rotor B mechanical seal uNS-Seal joint kit, Netzsch NMO21 B SM PIN SBE/P	Netzsch	4760441 5023297 8016162 P510107	Container #2
19	LS-03-18/21	Waleco Level Float	Waleco	KIP FS401E-4-5/2-13C26O39O52O	Container #2
20	P-03-08/09	Effluent Transfer Pump: Duplex Pump Package	Liberty	XLSG205M-5	Container #2
21	AE-03-57	DO Sensor	Rosemount	499ADO-54-50-CC-MC	Container #2
22	AE-03-58	PH Sensor	Rosemount	3900-02-10-CC-MC	Container #2
23	TT-03-11	Wall Mounted Air Temperature Sensor	Dwyer	TTE-1-02-W-LCD	Container #2
24	HTR-03-49	Space Heater	Hazloc	XEU1-12-075-600360-B-Y-B	Container #2
26	AE-03-11	H2S Sensor	Honeywell	XNXXSH1SS	Container #2
27	OC-03-12/13	Odor Control	Continental Carbon	Gasket Pressure Gauge	Container #2
28	FAN-03-50	Exhaust Fan	Canarm	SD-08XPF	Container #2
29	AE-03-11A	Wall Mounted Methane Sensor with transmitter combo	Honeywell	XNXAMSIRNIV1	Container #2
30	HTR-04-14	In-Line Heater	Rheem	RTEX-06	
32	BL-04-01	Sludge Holding Tank Blower: K04 Kit R20 Kit	FPZ	KR0102 KR0114	Container #3
33	BL-04-02	EQ Tank Blower: K04 Kit R20 Kit	FPZ	KR0102 KR0114	Container #3

34	BL-04-03	MBBR Tank Blower #1: K04 Kit R20 Kit	FPZ	KR0102 KR0114	Container #3
35	BL-04-04	MBBR Tank Blower #2: K04 Kit R20 Kit	FPZ	KR0102 KR0114	Container #3
37	TT-06-06	Wall Mounted Air Temperature Sensor	Omega	EWSA-PT 100-TX	Container #3
38	HTR-05-09A	Space Heater A	Ouellet	ODSA03004BL-TAV	Container #3
40	HTR-05-09B	Space Heater B	Ouellet	ODSA03004BL-TAV	Container #3
42	UVT-05-04/05	UV Disinfection Unit: UV Sensor Kit Replacement Lamps	UV Pure	GD1 E300210	Container #3
43	MP-05-06	Alkalinity Feed Pump	Grundfos	DDA 7.5-16 AR-PV/T/C-F-31U7U7B	Container #3
45	MP-06-08	Urea Feed Pump	Grundfos	DDA 7.5-16 AR-PV/T/C-F-31U7U7B	Container #3
47	MP-06-09	Defoamer Feed Pump	Grundfos	DDA 7.5-16 AR-PV/T/C-F-31U7U7B	Container #3
48	MP-06-07	Carbon Source Feed Pump	Grundfos	DDA 7.5-16 AR-PV/T/C-F-31U7U7B	Container #3
49	FAN-06-16	Exhaust Fan	Canarm	SD08	Container #3
50	MP-06-01	Liquid Polymer Makedown System	Excell Feeder	6PSEVO-400	Container #3
51	TT-07-06	Wall Mounted Air Temperature Sensor	Omega	EWSA-PT 100-TX	Container #4
52	HTR-07-05A	Space Heater A	Ouellet	ODSA03004BL-TAV	Container #4
53	HTR-07-05B	Space Heater B	Ouellet	ODSA03004BL-TAV	Container #4
56	HT-07-01B	In-Line Heater	Rheem	RTEX06	Container #4
57	P-07-03	Sink Pump	Liberty	LIB04	Container #4
58	HT-07-01A	Water Heater with Local Tempearture Control	Rheem	XE40M61ST30B0	Container #4
59	FAN-07-18	Exhaust Fan	Canarm	SD08	Container #4

Section 7

Commissioning Plan

Preamble

The purpose of this document is to give a guidance for plant testing and commissioning procedure, but it will not replace the instruction manuals supplied by the equipment manufacturer which are the first place of reference for problems by the operators.

In addition to the present sections of this document, the commissioning plant operation is based on the following documents:

- Process Flow Diagram (PFD).
- Piping and Instrumentation Diagram (P&ID).
- General Arrangement Drawings (GA Drawings)
- Supplier's manuals. (Refer operation and Maintenance manuals)

SAFETY 

All forms of wastewater (raw or even treated) pose a potential risk.

Some chemicals used in the Wastewater Water Treatment Plant (WWTP) are extremely dangerous.

WARNING 

All safety precautions must be strictly followed.

SAFETY 

Safety Precautions Prior Wastewater System Start-up:

- Conduct a thorough safety briefing and training with all personnel involved in the commissioning process.
- Ensure that all safety equipment's are readily available and functional.
- Ensure that the recommendations in the **Appendix A: Guidance for Reducing Health Risk for Workers Handling Sewage**, page **25** has been implemented prior starting the commissioning. The provincial health guidelines are essential to follow. Any additional recommendations/ good practices are encouraged to be added.
- It is important to perform detailed visual inspections of all components, including tanks, pumps, valves, and pipelines, to detect any signs of corrosion, wear, or damage. In general, all rectifications should be done first prior to star-up. If the damage can be isolated without compromising the plant, then the plant can be started

1.0 *General Initial Start-up Procedure*

WARNING ⚠

Prior to starting of the system, all components should be individually inspected and tested according to the manufacturers' operating instructions. Pre-commissioning start-up checklist is provided to facilitate the commissioning; nevertheless, it doesn't replace the supplier's manual.

Operators should read all manufacturers' manuals, and familiarize themselves with the components, before attempting to operate a system.

SAFETY 👁

Before attempting to commission a Wastewater Treatment Plant (WWTP), the safety aspect must be always considered first and safe disposal of products used during testing as well. It means that all safety devices have to be activated and tested before attempting to bring dangerous chemicals or makeup water on site. The overflow network and the drainage system must be completed enough to allow safe disposal of the wastewater used during the test without risk of accidental flooding/ contaminating the environment. Chemicals used during commissioning shall be stored in a proper manner and handled safely. Material Safety Data Sheet (MSDS) must be always displayed near the product. Handling of chemicals will be done in accordance with the MSDS and the safety procedures used in the plant. All operators/ personnel require to have their proper training prior handling any chemicals.

Short list of items to keep in mind

1. Never enter a "Confined space" area without following the plant safety procedures.
2. When handling chemicals always protect yourself and others. Follow specific instructions and Material Safety Data Sheet (MSDS).
3. Ensure that personnel and obstructions are clear of all active equipment.

4. Ensure that all guards and covers are in place before starting any equipment. If inspection or cleaning is required, turn system power off and lock out power sources before disassembly.
5. Keep hands, accessories and loose clothing away from moving equipment.
6. Do not poke or prod material in the equipment with a bar or a stick.
7. Do not overload equipment. Maintain operating speeds below the specified maximum.
8. Close all access man ways and inspection hatches to prevent injuries.
9. Post warning signs in hazardous areas.

It is suggested that a dry run (equipment and control sequence test without product flowing) be performed before start-up with product. For that, recheck starter basic operations: Manual operation, automatic operation, safety interlocks, and emergency stop push button if any, when the starter is in test mode (No power applied to the drive).

General Sequence

- Carry out any necessary final hydrotest for treatment structures, pipes and chemical units. Initial hydrotest on equipment inside the containers has been performed at H2Flow facility before shipment. Hydrotests for lift station, EQ tank, MBBR tanks, clarifier, transfer tank, treated effluent tank, and sludge tank have been performed at fabricators' facilities. However, a final hydrotest on will be performed during the start-up and commissioning period by H2Flow technician in the field.

- If necessary, lubricate compressors in accordance with manufacturer's recommendations. Blowers already have been lubricated and oil has been filled to recommended level by manufacturer. H2Flow has verified the blowers' operational condition and oil level before shipment of containers to site. However, a final check should be done prior commissioning.

- Carry out electrical tests, including the direction of rotation of motors. Check that all control devices are providing the correct signals to the control panels. These tests must cover:

    - Inspection and test of Local Control Panel before energization.

    - VFD parameters adjustment.

    - Cables addressing inspection and continuity test (Power and control cables) as per interconnection drawings.

    - PLC input/output test.

    - Instruments loop test according to supplier's documentation and electrical drawings.

- Automatic valves test, with adjustment of limit switches if required. Valve actuators should be activated in all positions to ensure that wiring is placed correctly.
- Check carefully protection devices such as pressure/ level switches on all pump suctions, mixers and specifically LL levels that keep the pumps/ mixers from running dry.
- Check the condition of flowmeters, DO sensors, pH sensors, Level sensors/ transmitters. These instruments have been factory calibrated and ready to use in the field.
- Check controls, automatic sequences and programming of each system.
- Test each machine individually (field test). Measure and record the operating parameters such as the drawn current, voltage, flow, and pressure to ensure that each machine functions as designed. Correct any abnormality (leakage, vibration etc.).

Ensure also that the following verifications are completed before undertaking start-up of the plant:

1. Ensure water and wastewater pipelines have been installed and tested.
2. Ensure all tanks' overflow and drains are connected.
3. Ensure an adequate water supply is available.
4. After repairing leaks, if any, repeat the testing procedure, as outlined above, until all the leaks have been corrected. Repeat leak repairs as required.

- Organize three temporary submersible pumps and ten flexible hoses.
- Organize the supply of these chemicals:
  - Carbon source.
  - Nitrogen source.
  - Phosphorous source.
  - Alkalinity source (bicarbonate).
  - Citric Acid.
  - Antifoaming agent.
  - Polymer (the type of polymer is to be determined based on jar test).

- *Avoid these chemicals: Sulfuric acid, hydrochloric acid, caustic soda, and lime. They can negatively interfere with the start-up.*
- Procure portable wastewater analyzer that can measure the constitutes of concern.
- Follow the recommended process for start-up the wastewater treatment plant (decision is to be made whether seeding / no seeding sequence).
    - Note the time required for each option.

2.0 INTRODUCTION

The aim of the Eureka Wastewater Treatment Plant (WWTP) is to treat the wastewater to the safe limits prior discharging to the environment.

This document introduces the necessary steps and information for the operation team of the wastewater treatment plant, which must be followed during the normal operation in the plant and must be considered during any start up also.

WARNING ⚠

For general Before pumping the raw wastewater toward the plant, the raw wastewater full analysis must be done in a laboratory to ensure that it is compatible with the design basis of the plant. It is essential to make sure there are no toxic material that can negatively interfere with the biological activities. The best course of action is to take representative samples over several months to establish enough confidence in the characteristics of the wastewater being sent to the plant. This confirms no changes from the design stage. This system is supplied based on design criteria supplied by client. Due to remote jobsite location there are no analysis performed before pumping wastewater.

It is crucial to consult with professional chemical suppliers or environmental specialists regarding any chemicals that are sent to the drain and make their way to the wastewater treatment plant. These experts can recommend alternatives that are safe for wastewater treatment systems, particularly during start-up, to minimize disruption to biological processes.

It is important for these suppliers to provide clear guidance on:

1. ***The chemical composition and its compatibility with biological systems.***
2. ***Alternative options to minimize disruption to biological processes.***
3. ***The minimum required dilution to avoid adversely affecting microbial activity.***

Adhering strictly to these recommendations will help maintain the balance in the wastewater system and ensure its optimal performance.

Equipment outside of H2Flow's Scope of Supply is not under the control of H2Flow. A fault signal is generated within the WWTP can be used to control the equipment outside of H2Flow WWTP.

Detailed Commissioning Management Plan

It is important to collect all observation during all stages by taking notes, photos and videos. These records will allow easier follow up and better evaluation plant performance.

Stage 1: Pre-Commissioning Inspection and Checklist at Site

- Review overall installation for completeness and verify that all items contained in the Installation Instructions provided have been completed, including the following:
  - Rigging, placement, and anchoring of below ground Lift station, and above ground containers.
    - After construction, make sure all debris is removed from the Lift station and vents are open and clear (check vents in the containers).
    - Check all flanges for gaskets and bolt tightness.
    - Check the MBBR inlet and outlet screens for gaskets and bolts for tightness (if applicable).
    - If installed, check the MBBR drain screen and piping for gaskets and bolts for tightness. Make sure the drain valve on the piping outside the tank is operable and is closed.
  - Installation of components supplied loose, such as level switches and/or sensors for outdoor tanks, submersible pumps, and DO sensors for MBBR tanks.
  - Field Piping Schedule:
    - Assure that piping is installed correctly and properly supported.
    - Make sure there are no high points in the influent piping where air could get trapped and affect flow volume.
- Review PFD, PID and GA drawings and verify that the installed equipment are in the right sequence with correct pipe sizes and valve placements.
- Review scope of supply to ensure all equipment is installed and accounted for.
- Check all motor and pump nameplates against the record. Use project management equipment list.
- If needed, lubricate electro-mechanical equipment in accordance with manufacturer's recommendations.
- Confirm all overloads and disconnects are OFF before applying power to the main control panel.

- Detailed site acceptance test (SAT) checklist is provided separately for whole system.
- Check carefully protection devices such as pressure/level switches on all pump suctions and mixers:
    - Specifically, LL levels that keep the pumps from running dry.
- Flowmeters are installed & connected. Make sure installation inside the containers did not come loose during the shipment.
- Pressure sensors are installed & connected. Make sure installation inside the containers did not come loose during the shipment.
- All the valves are installed & connected. Make sure installation inside the containers did not come loose during the shipment.
- After put the system to manual mode, Check rotation of all pumps (Bump Test).
- Control panel digital and analog wiring is completed. Make sure installation inside the containers did not come loose during the shipment.
- Verify panels have power and turn power on.

Prior moving to the next step, complete commissioning checklists for the supplied equipment, this can be found in separate SAT test.

Stage 2: System Start-up with Clean Water

Process Note:

It is important to procure/ arrange clean water prior start-up. Usually, the first start-up requires big amount of water. Three to five times the plant capacity is a good estimate as a starting point. This is the responsibility of the site/client.

1. Prior to introducing water, it is noted that all free chlorine must be removed as chlorine will severely hinder the microorganisms growth.
2. If none-chlorinated water is not possible to procure, a de-chlorination is essential. Prior introducing the wastewater, make sure there is no chlorine residual in the system.

Tanks Test and Start-up with Clean Water

1. Start by examining the aeration grid in Equalization Tank (TK-01-13), and Sludge Holding Tank (TK-02-01):
    a. Check the Air diffusion pipes inside the equalization and sludge holding tanks are connected properly and as per the detailed installation drawings.
    b. Check welding, distribution of pipes, holes etc.
    c. Confirm isolation valves are in proper order.
2. Make sure that the tanks are completely cleaned.
3. Fill the EQ (TK-01-13) and sludge holding tank (TK-02-01) with clean water in order to cover the air diffusers by 2 – 3 feet (60.0 – 90.0 cm).
4. Operate the air blowers (BL-04-02 and BL-04-01) and check the air pattern inside the tanks:
    a. The air diffusers should cover the entire tank area and evenly distributed to provide optimum mixing.
    b. Check if there is any leakage in the pipes, fittings etc.
5. If any problem found in the air diffusers/ aeration grid, it should be solved at this stage (repeat steps 1 to 4 until no issues found).

6. Fill the tanks to the design operating water level (side water depth (SWD)) or usually little below the high-high level switch. verify the aeration system integrity one more time.

7. Verify the positions of the level switches/ level sensor (if any) in all tanks.

MBBR Tanks (MBBR-03-01 and MBBR-03-02) Commissioning Procedure

1. Fill the water to the operating level.
    a. The system is designed based on design temperature between 7 – 20 °C. *It is noted that lower water temperature than design temprature will significantly hinder the commissioning process.* Blower air introduction will raise the water temp over time.
    b. The maximum allowed water temperature should not exceed of 30 °C prior introducing to the tank with media.
    c. If influent temprature is lower, then client should supply immersion heater to raise the water temperature as long as it will not damage/ deform the media.
2. Run the air blower (BL-04-03) on manual mode on 100%. The heat generated from the blower will raise the water temp over time, if there is not heater present.
3. Continue aeration until good mixing is obtained, meaning visible movement of media on the surface.
    a. Good mixing is normally obtained after 2 to 3 days.
    b. During that time, make sure the water temprature stays within the design range. Blower air should keep the temperature in range.
4. If clumps persist for more than 3 days:
    a. Verify the second air blower (BL-04-04) can run with no equipment/ piping overheating.
    b. Whistling throughout the pipe can be an issue, hearing protection equipment is advised prior commencing this step.
    c. Run both blowers (BL-04-03/04) at the same time on manual mode, target 65% of maximum flow each. This will provide more air of around 30%.
5. If clumps are still observed for more than a week, a help of citric acid might be necessary. *Please contact H2Flow prior applying these steps:*
    a. Verify the second air blower can run with no equipment/ piping overheating.
        i. Whistling throughout the pipe can be an issue, hearing protection equipment is advised prior commencing this step.

ii. Run both blowers (BL-04-03/04) at the same time on manual mode, target 65% of maximum flow each. This will provide more air of around 30%.

b. Temporary plug the effluent of the tank (TK-03-07) in order to protect downstream equipment from overflowing.

c. Check the water level inside the tank and estimate the amount of water in the tank. Record that level and calculate the estimated volume.

i. At the start, ensure the tank level is maintained at 70% as the starting point, this level will be used to establish how much acid solution is to be added.

ii. Filling to the top at the end of the acid introduction procedure.

d. Raise the water temperature in the tank (MBBR-03-01 and MBBR-03-02) to 20 – 25 °C. This can be done with either introducing a heat exchanger or with brining hot water source:

i. The hot water from the hot water tank can be blended with another source of water. The maximum blended water should not exceed of 30 °C prior introducing to the tank with media. ***Don't introduce water higher than 30 °C into the system as this will damage the media and cause it to deform.***

ii. It is possible to use an immersion heater to raise the water temperature as long as it will not damage/ deform the media.

e. Prepare the citric acid:

1. Recommended concentration is 5% w/v; Please follow the following safety procedure:

i. Materials Needed:

- Citric acid.
- Distilled Water.
- Personal protective equipment (PPE): Gloves, safety goggles, and lab coat.
- A mixing container: Non-metallic, such as plastic or glass.
- Scale and measuring tools.
- Mixing rod or stirrer.

ii. Safety Precautions:

- Work in a well-ventilated area.
- Avoid inhaling the citric acid powder.
- Always add the solid to water, not water to the solid, to ensure even dissolution.

iii. Procedure:

- Determine the Amount of Citric Acid: The formula for dilution is based on the target solution's weight/volume (w/v) percentage:
- Weight of citric acid needed = Concentration (%) × Final Volume (mL) / 100

  Example: To prepare 1 liter (1000 mL) of 5% citric acid solution:

  Weight = 5 × 1000/100 = 50 grams
- Prepare the Mixing Container:

  Pour 950 mL of water into the container to allow room for the solid.
- Add Citric Acid:

  Gradually add 50 grams of citric acid to the water while stirring.
- Stir Until Fully Dissolved:

  Ensure the citric acid dissolves completely to create a clear solution.
- Adjust the Volume:

  Add water as needed to reach exactly 1000 mL (1 liter).

f. Take a water sample of known volume, record this volume and gradually add citric acid to the sample while measuring the pH to reach the range between 5 – 5.5. Record that volume of acid (or the final volume of water + acid then subtract the initial water volume).

i. For example, for a water of 1000 mL, a 100 mL of diluted acid was needed to reach the pH of 5.5.

ii. Then, for the tank (the volume is 2.93 m^3), it would be around 0.293 m^3 of diluted citric acid.

iii. We can use a temporary tank to prepare the required amount of citric acid solution that will be needed.

1. Isolate tank.
2. Drop pump from the top of the tank.
3. Pump to be lowered; the attached garden hose outlet to go back into tank instead of going into MBBR. This will allow proper mixing of acid.
4. Once done, the tank has to be flushed before commissioning full system, in consideration of effluent pH.

g. Slowly add the citric acid into the points (inlet, inspection hatches at both tanks).

i. Start by adding totally 25% of the needed volume.

ii. Allow 30 minutes to mix, measure the pH at several points in the tank. If it reads similar pH, continue adding the citric acid. If pH reads different, keep mixing and measure again until it is uniform.

iii. Once at 75%, need to slow down volume input to less than 25% increments to avoid dropping below 5.

h. If the final water level is less than the operating volume, keep adding water and acid until the water is almost at the outlet level. Ensure volume addition of water considers addition of acid to maintain 5.5 pH.

i. Measure the pH and make sure it stays within the range, replenish if necessary. The media should declutter within few hours to overnight soak (depending on the severity). Keep the blowers running all the time.

System Run through all Process Steps with Clean Water

- Check for proper voltage to each motor.
- Adjust the air valves as required for proper aeration. Operate each VFD in Hand mode and check for proper speed control of the blower motors.
- System will be put on the Auto Mode (except air blowers will require a manual override). *Run the system at the lowest flowrate as possible*. Clean water flows from Screw Screen, EQ tank, MBBR Pumps, MBBR tanks, Clarifier, UV Feed Pumps, and finally to Treated Effluent Pumps.
- Check for leakage in the interconnecting piping
- Make sure equipment and instrument are properly working together without any alarms.
- Run the system in the Auto Mode for an hour without mixing as blowers are off in override situation.

When there are no further issues with clean water, the WWTP is ready for wastewater.

Stage 3: System Start-up with Wastewater

Process Notes:

1. The time required for biofilm generation on carrier elements will vary depending upon type of wastewater, temperature and the biodegradability of the constitutes as well as the absence/ presence of toxic materials.
2. The biofilm will become more efficient and robust as time goes by. In general, it requires around one year of good operation to reach its maximum potential capacity.
3. Severe foaming is usually encountered in the initial phases of treatment:
    a. This disappears after some weeks of operation as the system gets acclimatized to the situation.
    b. It is noted that foaming does not hinder treatment (make sure to keep an eye over the MBBR media not to leave the tanks ((MBBR-03-01 and MBBR-03-02))).
    c. Cover all the holes/ pipes and vents with temporary screens to prevent media from escaping the tanks.
    d. An antifoam can be added if the foaming is severe. It is recommended not to add the defoamer at the start up as it will slightly interfere (in a negative way) with the commissioning.

SAFETY 

Follow all safety requirements as needed. The operator will be exposed to raw wastewater, activated sludge, and potentially hazardous chemicals.

If in doubt, *do not* proceed prior asking and clarifying all the points.

WARNING ⚠

Untreated wastewater and activated sludge are recognized as sources of pathogens (disease-causing organisms). Before proceeding, ensure you have received proper safety training, are equipped with the necessary safety gear, and are following provincial guidelines, OHS regulations, and all instructions outlined in Appendix A: Guidance for Reducing Health Risk for Workers Handling Sewage, page 25.

Some chemicals used in wastewater are extremely dangerous. Do not proceed without proper safety training, safety equipment, following OHS instructions as well as all instructions given by employer.

SLUDGE DEWATERING BAGS FROM SLUDGE SYSTEM SHOULD BE HANDLED AND DISPOSED OF AS PER APPLIACABLE LOCAL REQUIREMENTS.

Fresh Wastewater Start-up

This start-up procedure is the preferred method as it cultivates the same microorganisms in the wastewater, it takes longer period of time and is subject to fail if operated incorrectly.

Process Notes:

1. ***Prior to introducing the wastewater, ensure there are no toxins that may kill/ inhibit the bacteria. Confirm excess cleaners and biocides are not being used upstream.***
2. It is important to pass the wastewater throughout the pre-treatment process (i.e. screen (SCR-01-01 OR SCR-01-02) and equalization tank (TK-01-13)) prior MBBR (MBBR-03-01).
3. Set up the plant in a way to allow the wastewater to keep recirculating after the clarifier. Portable pumps may be used at this time, or insure continuous flow.
4. Ensure to have 200% of the required / calculated nutrients: for example, if the calculated required nitrogen in wastewater is 28 mg/L, ensure to have 56 mg/L.

The reactor will start as continuous mode targeting 80%-100% of the full flow; the sequence is as follows:

1. Set the plant to 80%-100% of the maximum design wastewater flow:
    a. Check BOD, COD, NH_4, Alkalinity, pH and TP of the wastewater daily (or as frequent as possible based on site conditions) (influent only).
    b. Keep the D.O. operating at 4 mg/L minimum ***at all times:***
        i. If the dissolved oxygen level in the bioreactor is less than 4 mg/L, increase the airflow.
        ii. At the start, it is normal to have elevated D.O. at start-up, as high as 14.0 mg/L. The D.O. will drop eventually as the microorganisms are getting acclimatized and activated. At a certain point, a huge dip in the D.O. may happen.
        iii. It is important to keep the air blowers running for the full aeration period. A manual override may be needed.
        iv. Foaming is most likely going to happen after two weeks of operation:
            1. Foaming is not a process problem.
            2. The aeration can be decreased if the foaming becomes a huge problem. Contact H2Flow prior decreasing aeration.

3. Foaming has to be monitored frequently during startup, by looking in to the reactor(s).
4. Foam inhibitor (chemicals) may be dosed during this period. Contact H2Flow prior adding any defoamer.
5. The foaming problem will decrease as the biofilm matures.

c. Ensure the pH is in the healthy range (pH 6.5 – 8):

i. Initially, the pH may drop down, this point is to be recorded.

ii. Correct the pH and check the alkalinity of the system.

iii. Another common problem is the pH may rise to alkaline values, correct the pH and check the alkalinity of the system. This point is to be recorded.

iv. If that happened, the pH will go through this cycle one more time, usually indicating that the system has fully acclimatized and ready for continuous operation.

2. After 5 hours:

a. Check the aeration pattern and make adjustments if required (an even distribution of the air over the whole reactor volume).

b. If the water level is increasing beyond screen spool outlet, stop the influent flow, lower the water level in the bioreactor and inspect the carrier retention screens.

c. Ensure that the carrier retention screens are clean and free from debris.

3. Repeat step 2 after 10 hours and 20 hours (from first introducing the wastewater).

4. If MBBR media are not completely mixed and/or accumulations of biofilm carriers are floating on top, increase the airflow until the biofilm carriers are completely mixed and there are no accumulations of carriers floating on the surface (check once a day minimum). The second air blower may be used as needed.

5. All treated effluent is to be sent to a temporary holding tank. That has to be hauled away and sent to a well-established plant. There is no temporary tank for this plant.

6. Repeat steps 1 to 4 until there is enough confidence that there are microorganisms on the media (usually it takes around 30 days) or if the dissolved oxygen level in the bioreactors reaches more

than 6 mg/L (whichever is earlier). ***Verify the visual inspection with influent and effluent BOD and COD analysis.***

a. Check if sludge started developing on the MBBR media, a sample from the aeration tank is required. A visual inspection to see if there are any signs of microorganisms on the media.

b. Collect and analyze the samples from ***both influent and effluent***:

1. If BOD doesn't meet the design criteria, stay in this stage until BOD meets the criteria.

2. If it met the criteria, check visually the difference between raw wastewater, biologically treated wastewater and clarified effluent.

7. Make the first increment in the flow:

a. After 5 hours, check visually the difference between raw wastewater, biologically treated wastewater and clarified effluent and compare between that and the one done earlier.

b. Repeat that visual check after 10, 24 and 48 hours. Note any potential difference as that would be a sign that the bacteria is getting washed out.

c. After 48 hours passes, collect and analyze the samples from ***both influent and effluent***:

i. If BOD doesn't meet the design criteria, stay at the set value in step 7.

ii. If BOD meets the criteria, increase the influent flow by 50%: for example, if the initial influent flow is 10% of the design capacity, it would be increased to 15% of the design capacity in the first increment, then to 22.5%... etc.

iii. Keep the D.O. operating at 4 mg/L minimum ***at all times***. Also, ensure to have the pH within 6.5 – 8.5 ***at all times***.

8. After adjusting the flow. Collect and analyze the samples from both influent and effluent.

9. Repeat steps 7 and 8 until 100% of the design influent flow rate is achieved. Total acclimation time will be site specific.

Notes:

1. COD can be used as a way to gauge the plant performance. However, these results should be always double checked with the BOD.

2. All drained wastewater should be sent to a temporary holding tank. This wastewater is to be hauled away as there is no way at site to treat that wastewater.

3. Nitrification may take a while to get fully commissioned. This is due to the fact that nitrifying bacteria are slow. It may take for nitrifiers up to 6 months to be fully functional.

4. The aeration must operate during the aeration period continuously in this stage in the aeration tank:

    a. It is normal to have foaming as the system is getting acclimatized. The foaming intensity, and color are to be recorded throughout the start-up and the entire operation.

    b. Turning the aeration system off may kill the sludge biology and complicate the situation.

Stage 4: Full System Run-through and Final Functional Test

Forward Flow with Wastewater – Run through all Process Steps

- System will be put on the Auto Mode. Raw wastewater flows from screw screen, through EQ tank (TK-01-13), MBBR tanks (MBBR-03-01 and MBBR-03-02) , Clarifier (CLR-03-03) , finally to effluent tank (TK-03-07) and UV (UVT-05-04/05).
- Make sure equipment and instrument are properly working together without any alarms.
- Take samples from raw wastewater, screened wastewater, after EQ, after MBBR and after clarifier daily.
- Record online oxygen sensor (AE-03-57), check aeration tank, frequency regulated blower, level transmitter… etc. This step is to be kept for at least the first year. There should be a log-book which all the data and observations are written down on a regular basis.
- Operators' training happens at this stage.

Activity	Frequency	Comment
Log-book: - Operator should walk around and if possible, take instrument reading manually; this will give you a quick indication if something is not right. - Document and analyze results.	Every day	It is imperative to document all actions which may affect the treatment plant. Keep the log-book safe and clean. Keep all records (pre-start-up, start-up, and everyday activity).
Air distribution in Aeration Tank and condition of media / wastewater mixing	Every day – first year Twice a week after	
Cleaning of DO-online instrument.	Once a month	The D.O. control the air blower. Cleaning the D.O. frequently ensure correct aeration throughout the system.
Cleaning of pH-online instrument.	Once a month	Check if calibration is needed.

Sampling and Effluent Monitoring

- There are not any online analyzers to monitor the effluent quality. Discharge quality and process effectiveness should be monitored through scheduled samplings.
- H2Flow recommends effluent sampling frequency should be once a day for the first year of successful commissioning. This can be reduced to minimum twice a week afterwards.
- BOD, un-ionized ammonia, TSS, total and fecal coliform should be monitored and also any other parameters that local environmental monitoring agency asked for.
- Sampling and analysis of those samples should be done by a trained technician. Customer or system operator should form a contract with wastewater quality assessment laboratory and check what are the requirements of the sample.

Spill Management Inside the Container

Each compartment of containers has floor drains. Any leakage or drained wastewater will be collected through floor drain and then directed to the lift station upstream.

Appendix A: Guidance for Reducing Health Risk for Workers Handling Sewage

Introduction

The presence of pathogens in wastewater, whether it is in its raw or treated form, poses a potential risk. These guidelines are applicable to various individuals and situations, including but not limited to:

1. Employees (including temporary ones) working at sewage treatment plants (where municipal wastewater is processed).
2. Employees working at sewage treatment plants where municipal wastewater is processed.
3. Personnel responsible for managing and dealing with biosolids. This includes workers at the plant, visitors to the facility, and individuals involved in the transportation of biosolids.
4. Visitors to sewage treatment plants.
5. Laboratory staff members who handle samples of untreated or treated effluents and biosolids.
6. Plumbers, irrigators, and other individuals engaged in maintenance tasks related to wastewater systems.

Sources of Hazards in Sewage

The sources of hazards in sewage can be primarily categorized into two sources:

1. Biological Hazards: commonly referred to as "pathogens": they are organisms that have the potential to cause diseases in humans. This includes viruses, bacteria, protozoa, and other similar microorganisms. The guidelines provided here specifically address the risks associated with human exposure to these biological hazards.
2. Chemical Hazards; usually are found at the plant upstream. This includes, but not limited to methane, carbon monoxide, hydrogen sulfide and ammonia. Sewage may also contain harmful chemicals, such as solvents, organic chemicals, heavy metals… etc.

The primary routes of exposure are absorption (by either skin or contact), inhalation, or ingestion.

Employer's Responsibilities

- Ensure the implementation of safe work practices and provide necessary information, instructions, training, and supervision to employees. This includes, but not limited to mandatory Occupational Health and Safety training.
- Foster a culture of consultation and cooperation among workers.
- Provide personal protective equipment (PPE) and establish systems for inspecting, maintaining, cleaning, and storing PPE.
- Offer or support occupational immunizations based on risk assessment:
    - Develop vaccination recommendations or prerequisites for workers exposed to sewage or human waste in collaboration with local health authorities.
    - If local authorities do not have specific recommendations, follow the guidelines provided by the Centers for Disease Control and Prevention (CDC):
        - Tetanus (up to date).
        - Polio.
        - Typhoid fever.
        - Hepatitis A and Hepatitis B.
    - Consult with a qualified health and safety professional to create site-specific worker health and safety plans.
- Ensure the provision of hand washing facilities, showers, change rooms, equipment storage areas and eating facilities. For workers in the field, provide portable sanitation equipment with clean water and soap.
- Provide appropriate labels and warning signs.
- Provide first aid supplies and offer first aid training based on the risk level.
- Ensure the provision of separate areas for storage of clean and contaminated equipment.
- Establish clear procedures for reporting incidents, injuries, and diseases. Develop and implement policies and operational procedures for managing and handling hazardous materials.

- Provide eye wash stations in splash hazard areas or areas where chemicals are handled.

Training

The employer has the responsibility to ensure that all workers, including operators and site visitors, receive adequate and regular training. This training should cover the following information:

- Proper hygiene practices and the reasons behind their importance.
- Safe work practices related to human effluent, biosolids, and recycled water, relevant to the specific site.
- Appropriate use, storage, cleaning, and disposal of contaminated personal protective equipment (PPE) and other equipment.
- Procedures for reporting damaged PPE and other equipment, incidents, and potential work-related illnesses or symptoms.
- How to recognise the signs and symptoms of waterborne diseases and the necessary notification procedures.
- Evacuation and emergency procedures in case of fire or explosion risks in the workplace.
- Relevant confined space procedures, if applicable.
- Workers transporting sewage should be trained on how the truck operates, procedures to safely handle the product including methods for venting vacuum pump exhaust vapours and how to drive safely with hazardous materials.

The employer must ensure that this training is comprehensive and provided regularly to all individuals within their organization.

Personal Protective Equipment (PPE)

Employers have the responsibility to provide appropriate personal protective equipment (PPE) to workers based on the specific tasks they are performing. When working with human effluent, biosolids, or recycled water, the following PPE is typically required:

1. Liquid-repellent coveralls.
2. Enclosed liquid repellent shoes or rubber boots with non-slip soles.

3. Waterproof gloves: These gloves should be worn whenever handling pumps, filters, screens, effluent, recycled water, biosolids, or grit.

4. Eye protection must be worn at all times in situations where there is a risk of exposure to dust, flying particles, or splashes. This includes, but not limited to goggles and face mask/ shield.

5. In certain circumstances, such as when dealing with raw sewage or confined spaces, additional PPE may be necessary. This can include, but not limited to, disposable or reusable respirators, and H_2S sensors. Air purifying respirators may be used to filter out particulates and/or gases. However, in confined spaces or areas with a risk of low oxygen levels, an air supplied respirator may be required.

Any other PPE that is identified as necessary during the risk assessment process should also be provided.

Workers' Responsibilities

General

Workers handling human waste or sewage are expected to adhere to certain requirements and responsibilities to ensure their own safety and the safety of others. These include:

- Following safe systems of work as directed by the employer: Workers should comply with the established procedures, protocols, and guidelines provided by the employer for handling human waste or sewage.
- Using personal protective equipment (PPE) as trained: Workers must utilize the provided PPE, such as gloves, eye protection, or respiratory protection, in the manner instructed during their training. This ensures they have appropriate protection against potential hazards.
- Reporting hazards or work-related injuries or illnesses: If workers identify any hazards, work-related injuries, or illnesses, they should promptly report them to their employer. This allows for appropriate actions to be taken to mitigate risks and ensure the well-being of the workers.
- Avoiding actions or omissions that may present hazards: Workers are responsible for their own safety and the safety of others. They should avoid any actions or omissions that could potentially create hazardous conditions or endanger themselves or their colleagues. This includes following safety protocols: such as complying with no smoking zones, maintaining awareness of their surroundings, and exercising caution throughout their work.
- Workers are responsible tell their medical practitioner about their work environment and seek further consult.

Basic Hygiene Practices

Workers should adhere to the following minimum practices to minimize health risks:

- Even with PPE, avoid (or minimize if not possible) direct contact with sewage or recycled water and unnecessary exposure to sprays and aerosols.
    - For example: use scoop/Beaker sampler to minimize direct contact with wastewater.
- Wash hands thoroughly with soap and clean water immediately after working and consistently throughout the work period.
- Maintain short fingernails and scrub them well with soap after work. Use nailbrushes if needed.
- Ensure hands are clean before eating, drinking, smoking, or using the toilet.

- Refrain from touching the face, mouth, eyes, nose, ears, genitalia, or open sores and cuts when handling sewage, biosolids, or recycled water.
- Before eating, remove work clothes, wash hands and face, and consume food only in designated areas away from sewage-contaminated areas.
- Keep open sores, cuts, lacerations, abrasions, and wounds covered with clean, dry bandages or waterproof dressings.
- Rinse eyes gently with drinking water if there is contact with sewage or recycled water.
- Remove work clothing at the end of the shift and, if possible, leave it at the workplace.
- Ensure the soles of boots are clean to minimize the spread of biosolids beyond the designated application areas. If possible, remove the boots before leaving the worksite.
- Keep work clothes separate from other clothes.
- Whenever feasible, launder and store work clothes separately.
- Clean work clothing daily using a 0.05% chlorine solution (1 part bleach to 100 parts water).
- Clean work tools after use.
    - Wipe down any submerged cables and hoses with an antibacterial solution when retracting them.
    - Sanitize door handles, controls, keyboards/mice and work surfaces.
- Shower after work and change into clean clothes before leaving the work area.
- Do not smoke or chew tobacco or gum while handling human waste or sewage. Minimize talking as well.

Work related symptoms

Workers should visit the medical practitioner if they have one or more of the symptoms below:

- ➔ Cramping stomach.
- ➔ Fever.
- ➔ Nausea.
- ➔ Diarrhoea.

- ➔ Vomiting.
- ➔ Yellowing of the skin.
- ➔ Symptoms of breathlessness, chest tightness and wheezing.
- ➔ Redness and pain of the eyes.
- ➔ Skin rash and/or pain.

Workers are required to follow the reporting protocol provided by the employer and follow the guidelines provided by the employer and medical practitioner.

Appendix B: Seeding Guidelines with Wastewater Available

MLSS from RAS (mg/L)	Required RAS Volume (m^3)	Required *WASTEWATER* Volume (m^3)	Final MLSS Concentration (mg/L)
5000	0.293	2.93	455
6000	0.263	2.93	495
7000	0.234	2.93	519
8000	0.205	2.93	523
9000	0.176	2.93	509

Initial % to Full Flow	Flowrate (m^3/h)								
	Initial Pump Setting	Increment no. 1	Increment no. 2	Increment no. 3	Increment no. 4	Increment no. 5	Increment no. 6	Increment no. 7	Increment no. 8
5%	0.04	0.059	0.089	0.133	0.199	0.299	0.449	0.673	Commissioned
6%	0.05	0.071	0.106	0.159	0.239	0.359	0.538	Commissioned	
7%	0.06	0.083	0.124	0.186	0.279	0.419	0.628	Commissioned	
8%	0.06	0.095	0.142	0.213	0.319	0.478	0.718	Commissioned	
9%	0.07	0.106	0.159	0.239	0.359	0.538	Commissioned		
10%	0.08	0.118	0.177	0.266	0.399	0.598	Commissioned		
11%	0.09	0.130	0.195	0.292	0.439	0.658	Commissioned		
12%	0.09	0.142	0.213	0.319	0.478	0.718	Commissioned		
13%	0.10	0.154	0.230	0.346	0.518	0.777	Commissioned		
14%	0.11	0.165	0.248	0.372	0.558	Commissioned			
15%	0.12	0.177	0.266	0.399	0.598	Commissioned			
16%	0.13	0.189	0.284	0.425	0.638	Commissioned			
17%	0.13	0.201	0.301	0.452	0.678	Commissioned			
18%	0.14	0.213	0.319	0.478	0.718	Commissioned			
19%	0.15	0.224	0.337	0.505	0.757	Commissioned			
20%	0.16	0.236	0.354	0.532	Commissioned				

Notes:

1. It is highly recommended to get sludge from MBR RAS.
2. For any values in between, use linear interpolation.

Appendix C: Seeding Guidelines with ***NO*** Wastewater Available

MLSS from RAS (mg/L)	Required Micro-C Mass (kg @ 100%)	Required Urea Mass (kg @ 100%)	Required Phosphoric Mass (kg @ 100%)	Required RAS Volume (m^3)	Required *WATER* Volume (m^3)	Final MLSS Concentration (mg/L)
5,000	3.06	0.20	0.10	0.293	2.63	455
6,000	3.10	0.20	0.10	0.263	2.66	495
7,000	3.20	0.20	0.10	0.234	2.69	519
8,000	3.20	0.20	0.10	0.205	2.72	523
9,000	3.20	0.30	0.10	0.176	2.75	509

Pump Setting	Required Synthetic Wastewater Refill Volume (m^3/d)	Required Micro-C Mass (kg @ 100%)	Required Urea Mass (kg @ 100%)	Required Phosphoric Mass (kg @ 100%)	Required Drain Volume (m^3/d)
20%	3.78	3.6	0.243	0.10	3.78
30%	5.67	5.4	0.365	0.11	5.67
45%	8.51	8.1	0.547	0.16	8.51
68%	12.9	12.3	0.827	0.244	12.9
100%	18.9	18	1.22	0.359	18.9

Initial % to Full Flow	Flowrate (m^3/h)								
	Initial Wastewater Pump Setting	Increment no. 1	Increment no. 2	Increment no. 3	Increment no. 4	Increment no. 5	Increment no. 6	Increment no. 7	Increment no. 8
5%	0.04	0.059	0.089	0.133	0.199	0.299	0.449	0.673	Commissioned
Initial % to Full Flow	Initial Synthetic Wastewater Pump Setting	Setting no. 1	Setting no. 2	Setting no. 3	Setting no. 4	Setting no. 5	Setting no. 6	Setting no. 7	Setting no. 8
95%	0.748	0.729	0.699	0.655	0.589	0.489	0.339	0.115	Commissioned

Notes:

1. It is highly recommended to get sludge from MBBR RAS.
2. For any values in between, use linear interpolation.
3. It is important to verify that the prepared wastewater will have the healthy pH (range 6.5 – 8.5)
4. For continuous operation with no wastewater during commissioning, please follow the same increment given in Appendix B: Seeding Guidelines with Wastewater Available, page 33. Keep in mind the following:
    a. Always make sure to have 100 C:8 N:2 P ratio; i.e. if the required BOD is 300 mg/L, then nitrogen should be 24 mg/L and phosphorous is 6 mg/L. This is during commissioning only.
    b. Recall the following ratios:
        i. Minimum C : N : P ratio at all time is 100 C: 4 N: 1 P (during plant operation).
        ii. 1 kg of micro-C yields 0.5492 kg of BOD.

iii. 1 kg of urea (at 100%) yields 0.466 kg of Nitrogen.

iv. 1 kg of phosphoric acid (at 100%) yields 0.316 kg of Phosphorous.

v. 1 kg of sodium bicarbonate (at 100%) yields 0.595 kg of alkalinity as $CaCO_3$.

vi. 1 kg of Nitrogen requires 7.14 kg of alkalinity as $CaCO_3$.

vii. It is recommended to have final alkalinity in the effluent of a minimum of 80 mg/L as $CaCO_3$.

Appendix D: MBBR Start-up Troubleshooting

MBBR Toxicity:

Microbial Toxicity due to Chemical Inhibitors

Chemical inhibitors may enter the system from various sources, including industrial discharges, cleaning agents, or even accidental spills. These chemicals can inhibit microbial activity, affecting the biofilm's ability to degrade organic matter. The most common ones are chlorinated compounds, biocides and other industrial chemicals (such as solvents and surfactants).

Remedy:

Check with chemical suppliers about alternatives. Prevent these chemicals from entering the wastewater.

Oil Spells

Oil coats the biofilm carriers, blocking substrate and oxygen from reaching microorganisms.

Remedy:

Prevent the source is the best option. If not possible, Install Oil-Water Separators, Coalescing Filters, or add pre-treatment.

Sulfide Toxicity

The most common toxicity source in MBBR is sulfide formation. Sulfide may originate from outside the system, from septic influent wastewater or from septage disposal, or when no enough dissolved oxygen in the system.

Remedy:

Add alkaline agent (try to avoid lime) to the aeration basin to raise the pH to 7.5 or above if sulfide toxicity is occurring.

Low pH Toxicity

Low pH happens when extensive nitrification combined with low wastewater alkalinity.

Remedy:

This can be solved by reducing aeration and/ or add alkaline agent.

Foaming

Foaming is one of the most common problems seen with the MBBR operations.

Foam Description	Cause(s)
Thin, white to grey foam	Low cell residence time or "young" sludge (startup foam)
White, frothy, billowing foam, stable with a creamy texture	Nonbiodegradable detergents/ surfactants in wastewater.
Light-colored and fluffy, resembling shaving cream combined with a yeasty or musty odor.	Biological imbalance in the microbial community or excessive growth of filamentous bacteria. Insufficient mixing or aeration in the MBBR system.
Thick, pasty or slimy, greyish foam	Insufficient nutrients.
Thick, brownish foam with a foul odor	High organic compounds in the influent wastewater. High fats, oils, and grease (FOG) values. Incomplete degradation of organic matter by microorganisms due to overloading shock.
Dense, stringy foam with a spiderweb-like appearance.	Overgrowth of filamentous bacteria, such as Microthrix parvicella, Nocardia spp. Presence of surfactants or organic compounds that promote the growth of filamentous bacteria.
Thin, white foam on the surface of the MBBR reactor or in downstream process units	Hydraulic surges or fluctuations in flow rate within the MBBR system. This foam dissipates relatively quickly once hydraulic conditions stabilize.