pam	P	T	C	Commercial	040		050		063		075		090		105		110		130	
132 B5	9	008	14 N	Hex screw DIN 931	-	-	-	-	-	-	-	-	-	-	M12x45	4	M12x45	4	M12x45	4
	9	008	15 N	Nut DIN 934/6	-	-	-	-	-	-	-	-	-	-	M12	4	M12	4	M12	4
	9	008	16 N	Oil seal DIN 3760	-	-	-	-	-	-	-	-	-	-	A 50x72x10	1	A 50x72x10	1	A 50x72x10	1
063 B14	9	008	14 N	Hex screw DIN 931	M5x20	4	-	-	-	-	-	-	-	-	-	-	-	-	-	-
	9	008	15 N	Nut DIN 934/6	M5	4	-	-	-	-	-	-	-	-	-	-	-	-	-	-
	9	008	16 N	Oil seal DIN 3760	AS 25x35x7	1	-	-	-	-	-	-	-	-	-	-	-	-	-	-
071 B14	9	008	14 N	Hex screw DIN 931	M6x16	4	M6x16	4	M6x25	4	-	-	-	-	-	-	-	-	-	-
	9	008	15 N	Nut DIN 934/6	M6	4	M6	4	M6	4	-	-	-	-	-	-	-	-	-	-
	9	008	16 N	Oil seal DIN 3760	AS 25x35x7	1	A 30x47x7	1	A 35x52x7	1	-	-	-	-	-	-	-	-	-	-
080 B14	9	008	14 N	Hex screw DIN 931	-	-	M6x20	4	M6x25	4	M6x25	4	M6x25	4	-	-	-	-	-	-
	9	008	15 N	Nut DIN 934/6	-	-	M6	4	M6	4	M6	4	M6	4	-	-	-	-	-	-
	9	008	16 N	Oil seal DIN 3760	-	-	A 30x47x7	1	A 35x52x7	1	A 40x60x10	1	A 40x60x10	1	-	-	-	-	-	-
090 B14	9	008	14 N	Hex screw DIN 931	-	-	-	-	M8x25	4	M8x25	4	M8x25	4	-	-	-	-	-	-
	9	008	15 N	Nut DIN 934/6	-	-	-	-	M8	4	M8	4	M8	4	-	-	-	-	-	-
	9	008	16 N	Oil seal DIN 3760	-	-	-	-	A 35x52x7	1	A 40x60x10	1	A 40x60x10	1	-	-	-	-	-	-
100-112 B14	9	008	14 N	Hex screw DIN 931	-	-	-	-	-	-	M8x25	4	M8x25	4	-	-	-	-	-	-
	9	008	15 N	Nut DIN 934/6	-	-	-	-	-	-	M8	4	M8	4	-	-	-	-	-	-
	9	008	16 N	Oil seal DIN 3760	-	-	-	-	-	-	A 40x60x10	1	A 40x60x10	1	-	-	-	-	-	-

* Torx Screw TC DIN 7984

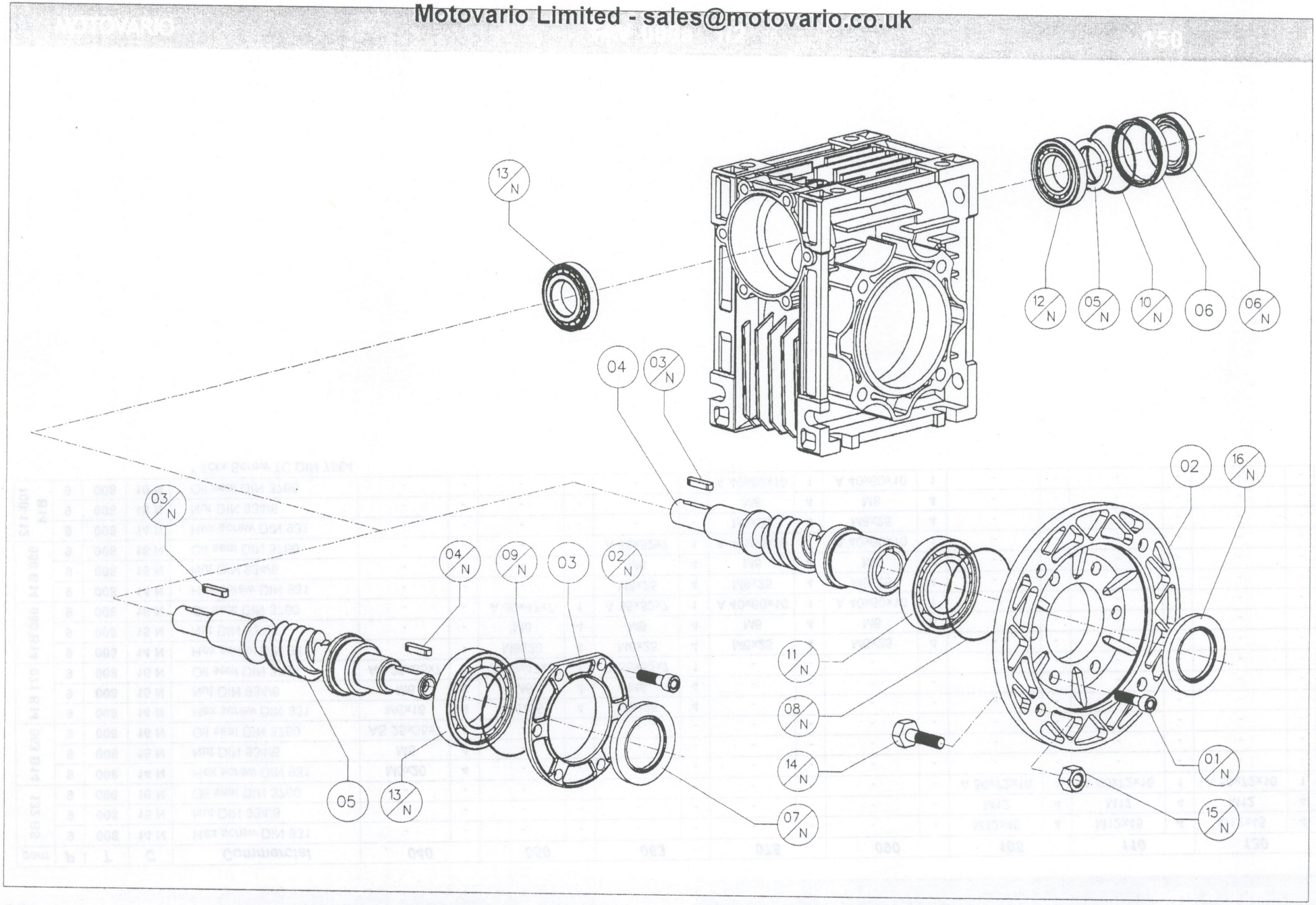
13/N
12/N
05/N
10/N
06
06/N
04
03/N
02
16/N
03/N
04/N
09/N
03
02/N
11/N
08/N
14/N
07/N
01/N
15/N
05
13/N

P	T	C	Built	150
9	008	01	Casing	9.150.01
9	008	02	PAM flange	8.100.08
9	008	03	Gear unit cover	4.080.05
9	008	04	Double ext. PAM worm	9.150.15
9	008	05	Double ext. RV worm	9.150.17
9	008	06	Oil seal ring	9.150.18

pam	P	T	C	Commercial	150	
	9	008	01 N	Screw DIN 912	M12x25	6
	9	008	02 N	Screw DIN 912	M12x25	6
	9	008	03 N	Key DIN 6885	A 10x8x60	2
	9	008	04 N	Key DIN 6885	A 10x8x60	1
	9	008	05 N	Lock nut	Km9	1
	9	008	06 N	Oil seal DIN 3760	TC 40-72-10	1
	9	008	07 N	Oil seal DIN 3760	TC 40-100-25	1
	9	008	08 N	O-Ring	540	1
	9	008	09 N	O-Ring	540	1
	9	008	10 N	O-Ring	2325	1
	9	008	11 N	Bearing	6013	1
	9	008	12 N	Bearing NMRV	30209	1
	9	008	12 N	Bearing NRV	30209	1
	9	008	13 N	Bearing	6309	1
056 B5	9	008	14 N	Hex screw DIN 931	-	-
	9	008	15 N	Nut DIN 934/6	-	-
	9	008	16 N	Oil seal DIN 3760	-	-
063 B5	9	008	14 N	Hex screw DIN 931	-	-
	9	008	15 N	Nut DIN 934/6	-	-
	9	008	16 N	Oil seal DIN 3760	-	-
071 B5	9	008	14 N	Hex screw DIN 931	-	-
	9	008	15 N	Nut DIN 934/6	-	-
	9	008	16 N	Oil seal DIN 3760	-	-
080 B5	9	008	14 N	Hex screw DIN 931	-	-
	9	008	15 N	Nut DIN 934/6	-	-
	9	008	16 N	Oil seal DIN 3760	-	-
090 B5	9	008	14 N	Hex screw DIN 931	-	-
	9	008	15 N	Nut DIN 934/6	-	-
	9	008	16 N	Oil seal DIN 3760	-	-
100-112 B5	9	008	14 N	Hex screw DIN 931	M12x45	4
	9	008	15 N	Nut DIN 934/6	M12	4
	9	008	16 N	Oil seal DIN 3760	TC 60-80-10	1

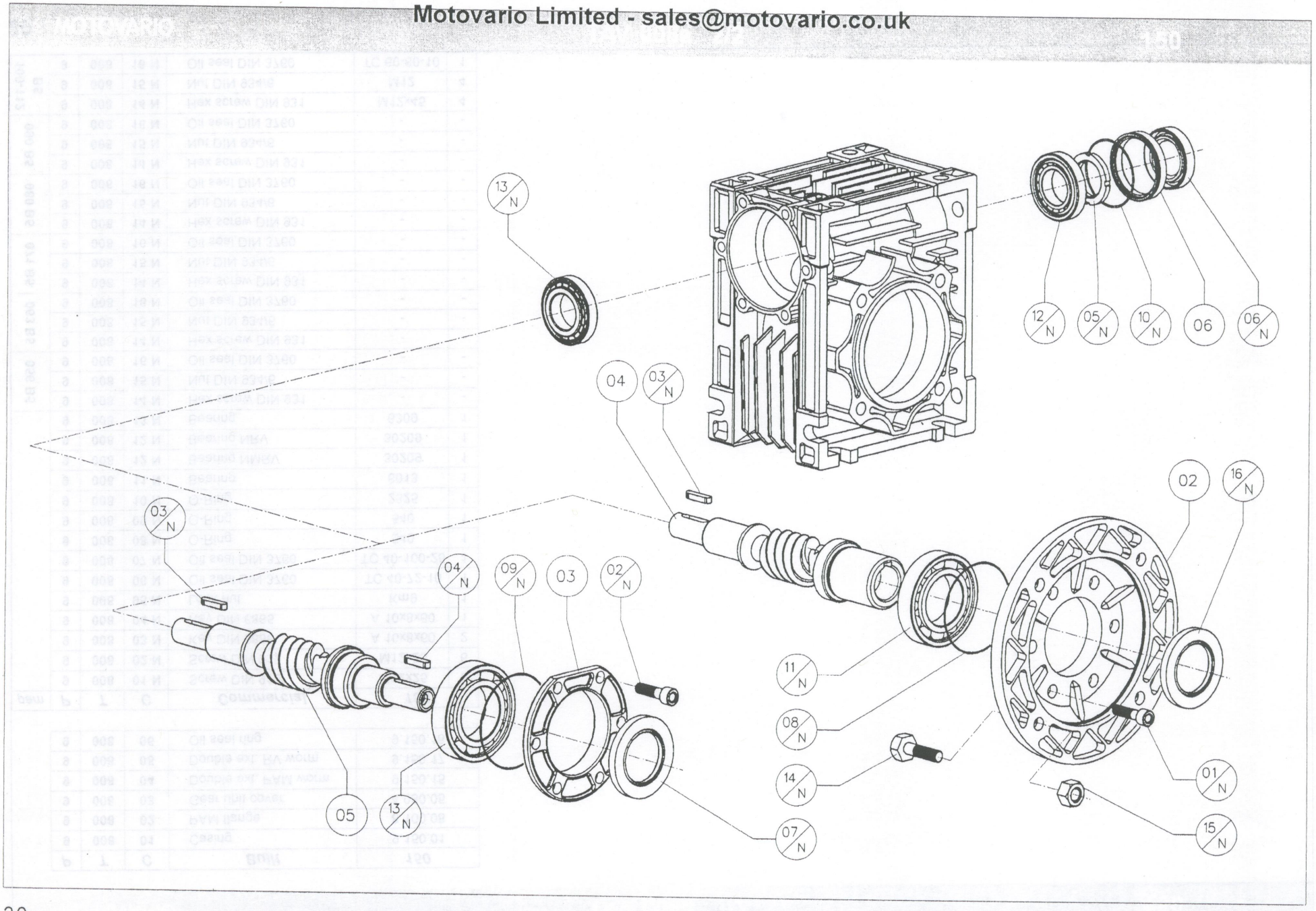
13/N
12/N
05/N
10/N
06
06/N
04
03/N
02
16/N
03/N
04/N
09/N
03
02/N
11/N
08/N
14/N
07/N
01/N
15/N
05
13/N

pam	P	T	C	Commercial	150	
132 B5	9	008	14 N	Hex screw DIN 931	M12x45	4
	9	008	15 N	Nut DIN 934/6	M12	4
	9	008	16 N	Oil seal DIN 3760	TC 60-80-10	1
063 B14	9	008	14 N	Hex screw DIN 931	-	-
	9	008	15 N	Nut DIN 934/6	-	-
	9	008	16 N	Oil seal DIN 3760	-	-
071 B14	9	008	14 N	Hex screw DIN 931	-	-
	9	008	15 N	Nut DIN 934/6	-	-
	9	008	16 N	Oil seal DIN 3760	-	-
080 B14	9	008	14 N	Hex screw DIN 931	-	-
	9	008	15 N	Nut DIN 934/6	-	-
	9	008	16 N	Oil seal DIN 3760	-	-
090 B14	9	008	14 N	Hex screw DIN 931	-	-
	9	008	15 N	Nut DIN 934/6	-	-
	9	008	16 N	Oil seal DIN 3760	-	-
100-112 B14	9	008	14 N	Hex screw DIN 931	-	-
	9	008	15 N	Nut DIN 934/6	-	-
	9	008	16 N	Oil seal DIN 3760	-	-

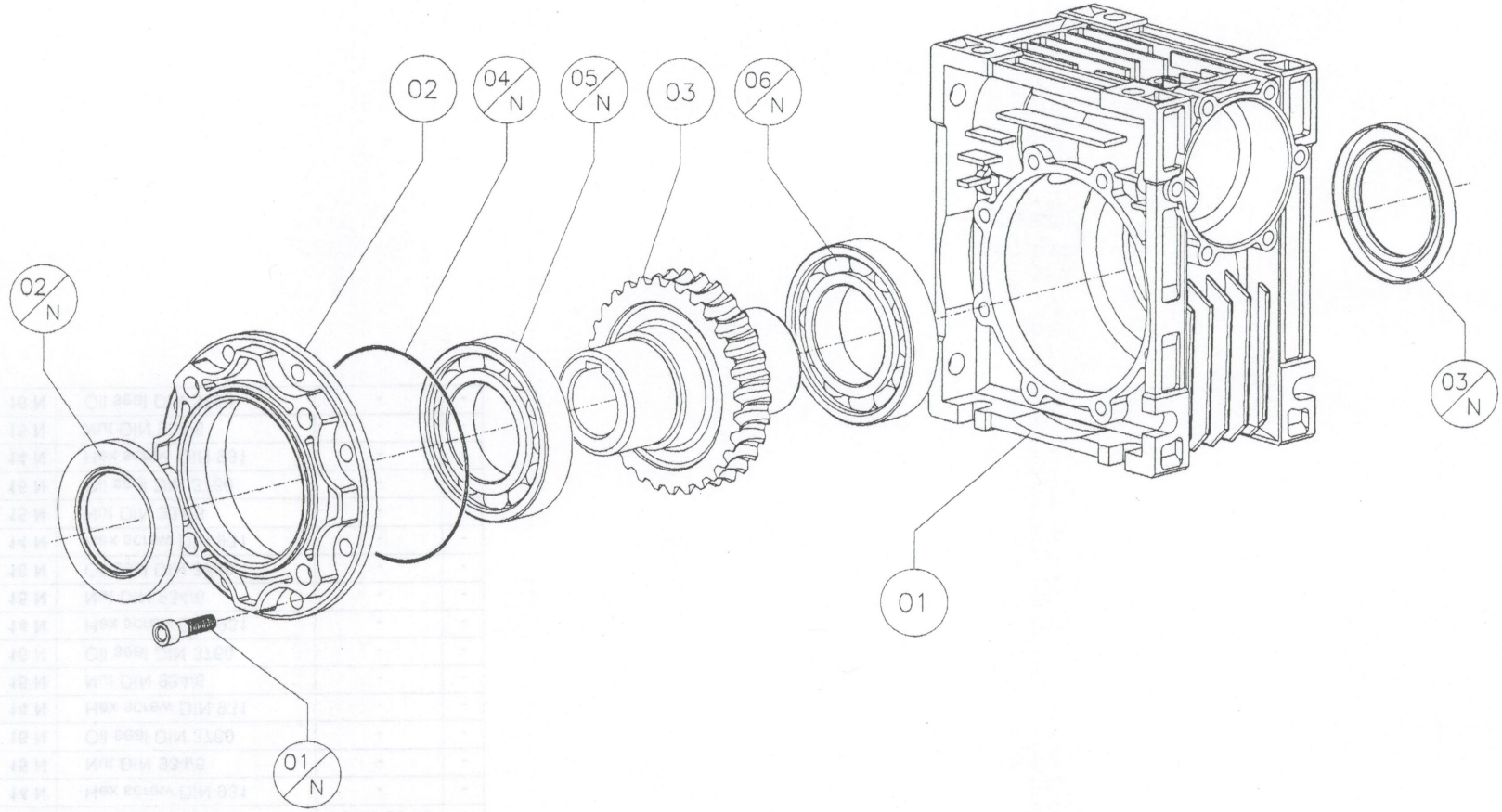
02
04/N
05/N
03
06/N
02/N
03/N
01
01/N

P	T	C	Built	040	050	063	075	090	105	110	130	150
9	009	01	Casing	9.040.01	9.050.01	9.063.01	9.075.01	9.090.01	9.105.01	9.110.01	9.130.01	9.150.01
9	009	02	Bearing support cover	9.040.02	9.050.02	9.063.02	9.075.02	9.090.02	9.105.02	9.110.02	9.130.02	9.150.02
9	009	03	Worm Wheel	9.040.11	9.050.11	9.063.11	9.075.11	9.09011	9.110.11	9.110.11	9.130.11	9.150.11

P	T	C	Commercial	040		050		063		075		090		105		110		130		150	
9	009	01 N	Screw DIN 912	M6x12***	8	M6x14	8	M8x18	8	M8x20	8	M8x20	8	M8x20*	8	M8x20	8	M8x20	8	M10x25	8
9	009	02 N	Oil seal DIN 3760	AS 30x40x7	1	AS 40x62x8	1	AS 45x65x10	1	AS 50x72x10	1	AS 60x85x8	1	AS 65x85x10	1	AS 65x85x10	1	AS 70x90x10	1	TC 90x120x12	1
9	009	03 N	Oil seal DIN 3760	AS 30x40x7	1	AS 40x62x8	1	AS 45x65x10	1	AS 50x72x10	1	AS 60x85x8	1	AS 65x85x10	1	AS 65x85x10	1	AS 70x90x10	1	TC 90x120x12	1
9	009	04 N	O-Ring	2250	1	2300	1	540	1	3500	1	3625	1	3750	1	3750	1	3925	1	41000	1
9	009	05 N	Bearing	6006	1	6008	1	6009	1	6010	1	6012	1	6013	1	6013	1	6014	1	6018	1
9	009	06 N	Bearing	6006	1	6008	1	6009	1	6010	1	6012	1	6013	1	6013	1	6014	1	6018	1

* Torx Screw TC DIN 7984

14.14

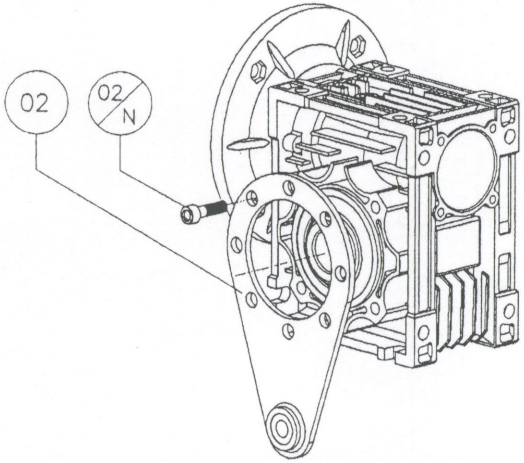
02
02/N

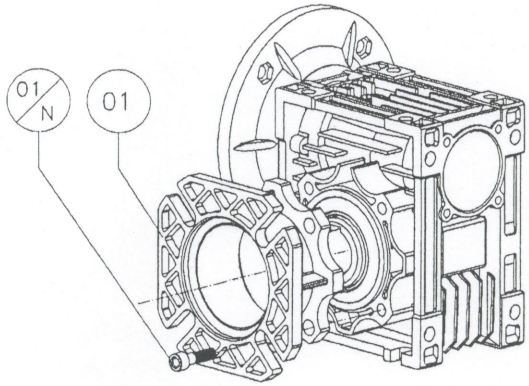
01/N
01

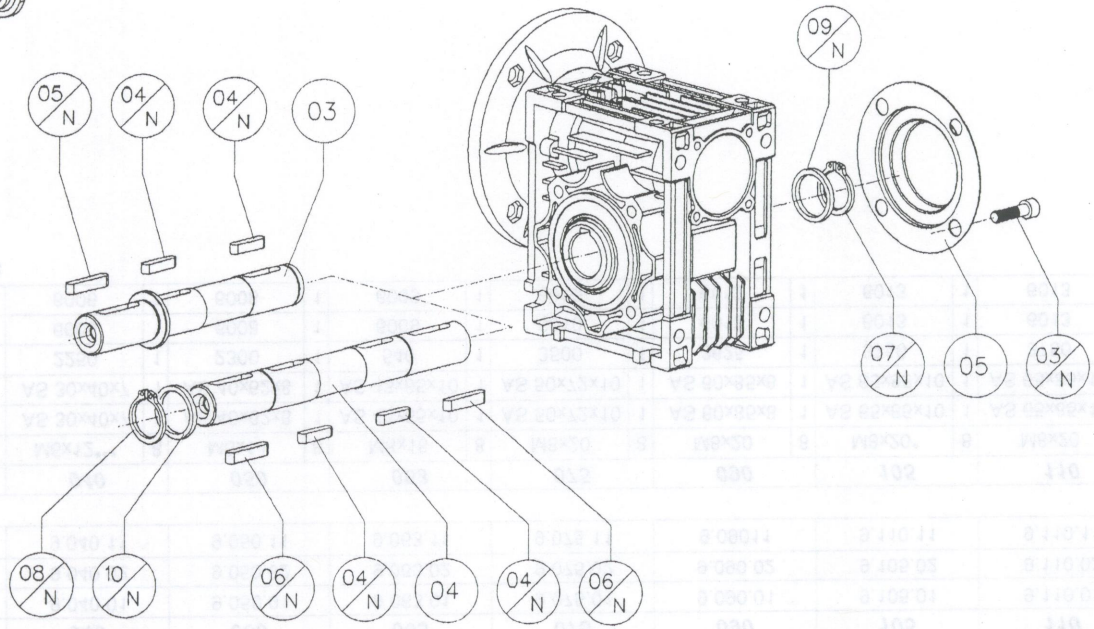
05/N
04/N
04/N
03
09/N
07/N
05
03/N
08/N
10/N
06/N
04/N
04
04/N
06/N

P	T	C	Built	040	050	063	075	090	105	110	130	150
9	010	01	Output flange	9.040.04	9.050.04	9.063.04	9.075.04	9.090.04	9.110.04	9.110.04	9.130.04	9.150.04
9	010	02	Torque arm	9.040.05	9.050.05	9.063.05	9.075.05	9.090.05	9.110.05	9.110.05	9.130.05	9.150.05
9	010	03	Single output Shaft	9.040.21	9.050.21	9.063.21	9.075.21	9.090.21	9.110.21	9.110.21	9.130.21	9.150.21
9	010	04	Double output Shaft	9.040.22	9.050.22	9.063.22	9.075.22	9.090.22	9.110.22	9.110.22	9.130.22	9.150.22
9	010	05	Protection cap	9.040.94	9.050.94	9.063.94	9.075.94	9.090.94	9.110.94	9.110.94	9.130.94	-

P	T	C	Commercial	040		050		063		075		090		105		110		130		150	
9	010	01 N	Srew DIN 912	M6x14	4	M8x16	4	M8x18	8	M8x20	8	M10x25	8	M10x25	8	M10x25	8	M12x30	8	M12x30	8
9	010	02 N	Srew DIN 912	M6x14	4	M8x12	4	M8x18	8	M8x18	8	M10x20	8	M10x20	8	M10x20	8	M12x25	8	M12x25	8
9	010	03 N	Screw DIN (see notes)	M6x12*	4	M8x14***	4	M8x16**	4	M8x18**	4	M10x16**	4	M10x16**	4	M10x16**	4	M12x20**	4	-	-
9	010	04 N	Key DIN 6885	A 6x6x20	1	A 8x7x30	1	A 8x7x30	1	A 8x7x30	1	A10x8x35	1	A 12x8x40	1	A 12x8x40	1	A 14x9x50	1	A 14x9x70	1
9	010	05 N	Key DIN 6885	A 6x6x30	1	A 8x7x35	1	A 8x7x35	1	A 8x7x45	1	A10x8x60	1	A 12x8x60	1	A 12x8x60	1	A 14x9x60	1	A 14x9x70	1
9	010	06 N	Key DIN 6885	A 6x6x30	1	A 8x7x35	1	A 8x7x35	1	A 8x7x45	1	A10x8x60	1	A 12x8x60	1	A 12x8x60	1	A 14x9x60	1	A 14x9x70	1
9	010	07 N	Circlip DIN 471	18	1	25	1	25	1	28	1	35	1	42	1	42	1	45	1	50	1
9	010	08 N	Circlip DIN 471	18	1	25	1	25	1	28	1	35	1	42	1	42	1	45	1	50	1
9	010	09 N	Spacer DIN 988	18x25x1,5	1	25x35x2	1	25x35x2	1	28x40x2	1	35x45x2,5	1	42x52x2,5	1	42x52x2,5	1	45x55x3	1	50x62x3	1
9	010	10 N	Spacer DIN 988	18x25x1,5	1	25x35x2	1	25x35x2	1	28x40x2	1	35x45x2,5	1	42x52x2,5	1	42x52x2,5	1	45x55x3	1	50x62x3	1

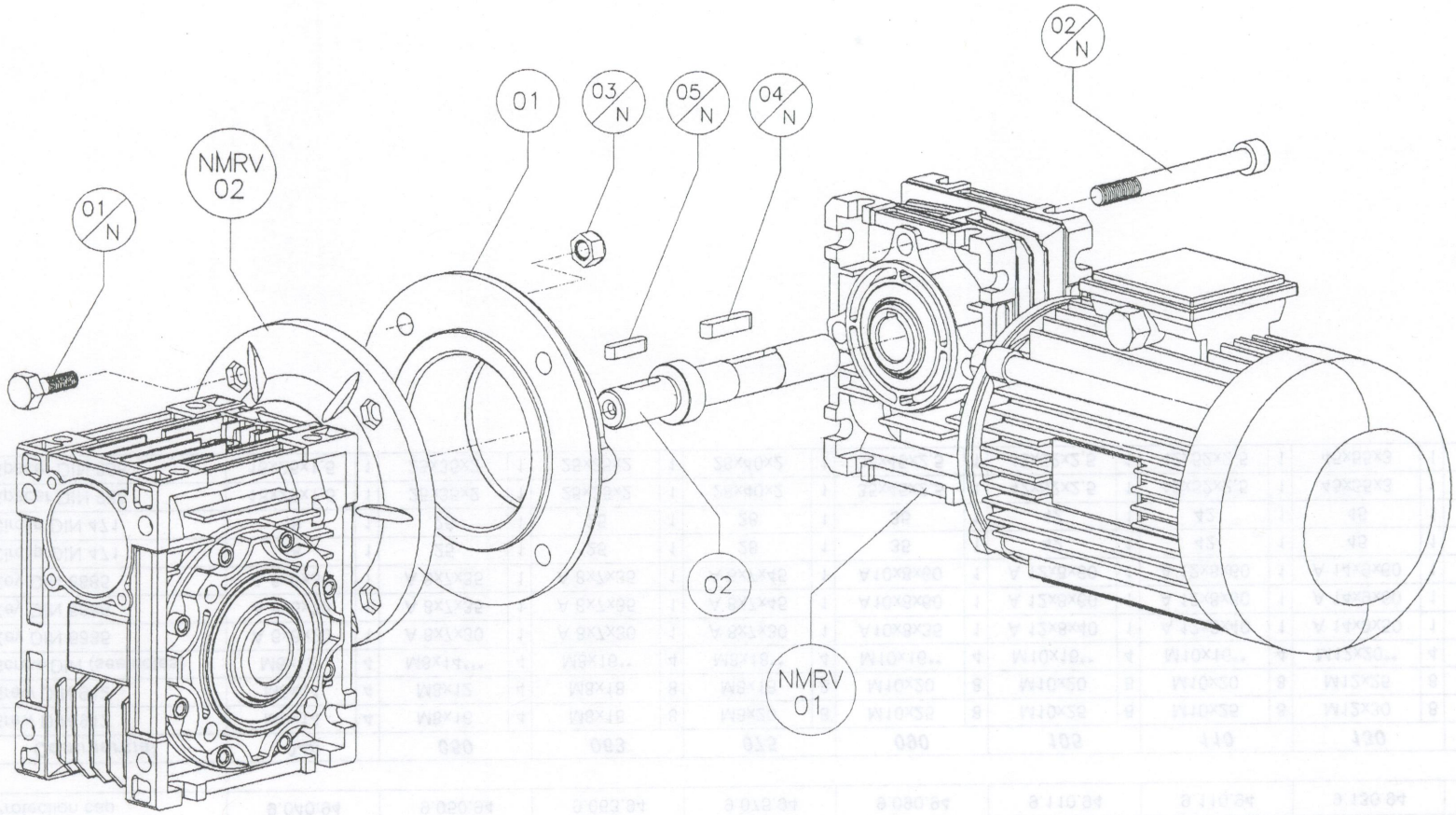
01/N
NMRV 02
01
03/N
05/N
04/N
02/N
02
NMRV 01

P	T	C	Built	025+030*	025+040
9	011	01	Combination flange	9.025.07.030	9.025.07.030
9	011	02	Connection shaft	9.025.23.11	9.025.23.11

P	T	C	Commercial	025+030*		025+040	
9	011	01 N	Hex screw DIN 931	M5x16	4	M5x15	4
9	011	02 N	Screw DIN 912	M6x55	3	M6x55	3
9	011	03 N	Nut DIN 934/6	M5	4	M5	4
9	011	04 N	KeyDIN 6885	A 4x4x20	1	A 4x4x20	1
9	011	05 N	KeyDIN 6885	A 4x4x15	1	A 4x4x15	1

* NMRV - 030/040 pam 063B14 ø90xø11

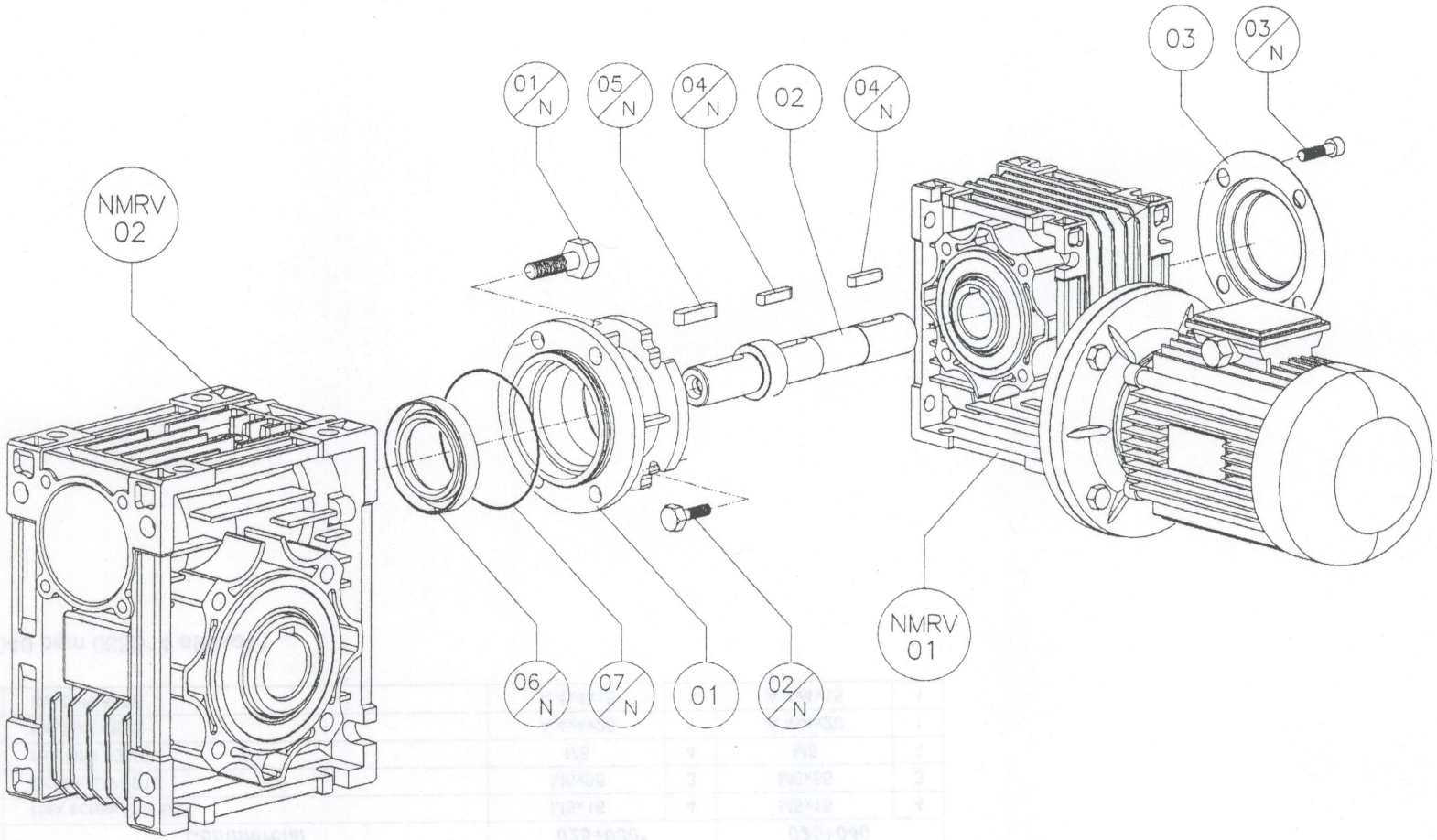
NMRV 02
01/N
05/N
04/N
02
04/N
03
03/N
06/N
07/N
01
02/N
NMRV 01

P	T	C	Built	030+040	030+050	030+063	040+075	040+090	050+105	050+110	063+130	063+150
9	012	01	Combination flange	9.030.07.040	9.030.07.050	9.030.07.063	9.040.07.075	9.040.07.075	9.050.07.110	9.050.07.110	9.063.07.130	9.063.07.150
9	012	02	Connection shaft	9.030.23.14	9.030.23.14	9.030.23.14	9.040.23.19	9.040.23.19	9.050.23.24/28	9.050.23.24/28	9.063.23.24/28	9.063.23.28/38
9	012	03	Protection cap				9.040.94	9.040.94	9.050.94	9.050.94	9.063.94	9.063.94

P	T	C	Commercial	030+040		030+050		030+063		040+075		040+090		050+105		050+110		063+130		063+150	
9	012	01 N	Hex screw DIN 931	M6x16	6	M6x16	6	M8x20	6	M8x20	6	M8x20	6	M8x20	6	M8x20	6	M8x20	6	M12x25	4
9	012	02 N	Hex screw DIN 931	M6x16	4	M6x16	4	M6x16	4	M6x16	4	M6x16	4	M8x16	4	M8x16	4	M8x20	4	M8x20	4
9	012	03 N	Screw DIN (see notes)	-	-	-	-	-	-	M6x12*	4	M6x12*	4	M8x14***	4	M8x14***	4	M8x16**	4	M8x16	1
9	012	04 N	Key DIN 6885	A 5x5x25	1	A 5x5x25	1	A 5x5x25	1	A 6x6x20	1	A 6x6x20	1	A 8x7x30	1	A 8x7x30	1	A 8x7x30	1	A 8x7x30	1
9	012	05 N	Key DIN 6885	A 5x5x20	1	A 5x5x20	1	A 5x5x20	1	A 6x6x30	1	A 6x6x30	1	A 8x7x35	1	A 8x7x35	1	A 8x7x35	1	A 8x7x45	1
9	012	05 N	Key DIN 6885	-	-	-	-	-	-	-	-	-	-	A 8x7x45	1	A 8x7x45	1	A 8x7x45	1	A 10x8x60	1
9	012	06 N	Oil seal DIN 3760	AS 25x35x7	1	AS 30x47x7	1	AS 35x52x7	1	A 40x60x10	1	A 40x60x10	1	A 50x72x10	1	A 50x72x10	1	A 50x72x10	1	TC 60x80x10	1
9	012	07 N	O-Ring	2162	1	2200	1	3225	1	2250	1	2250	1	2300	1	2300	1	2300	1	540	1

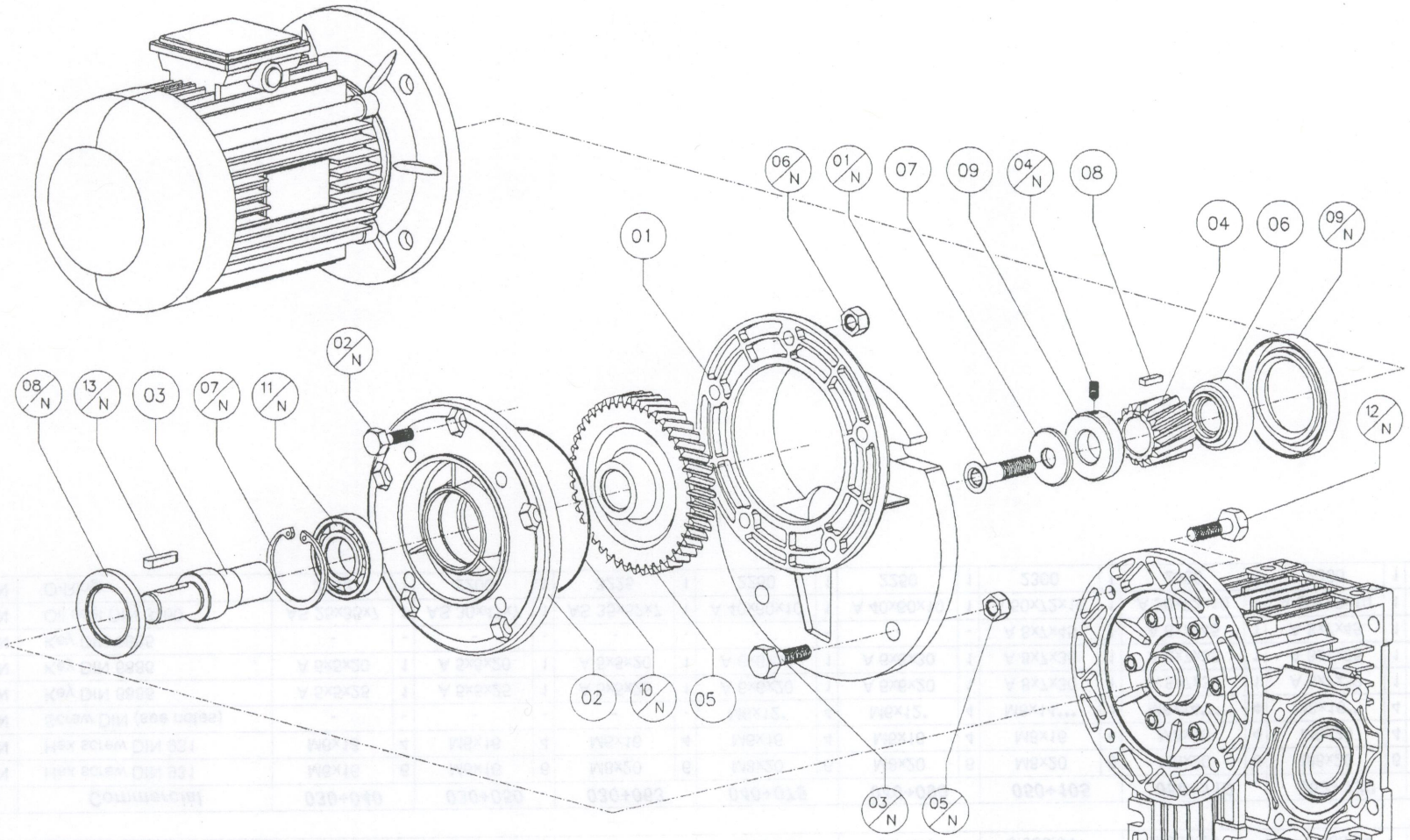
06/N
01/N
07
09
04/N
08
04
06
09/N
01
02/N
08/N
13/N
03
07/N
11/N
12/N
02
10/N
05
03/N
05/N

P	T	C	Built	063	071	080	090
9	013	01	Pre-stage unit casing	2.063.21	2.071.21	2.080.21	2.080.21
9	013	02	Cover	2.063.22	2.071.22	2.080.22	2.080.22
9	013	03	Low speed shaft	2.063.23	2.071.23	2.080.23	2.080.23
9	013	04	Hollow pinion	2.063.24	2.071.24	2.080.24	2.080.24
9	013	05	Gear	2.063.25	2.071.25	2.080.25	2.080.25
9	013	06	Bush	2.063.26	2.071.26	2.080.26	2.080.26
9	013	07	Washer	2.063.27	2.071.27	2.080.27	2.080.27
9	013	08	Special key	2.063.28	2.071.28	2.080.28	2.080.28
9	013	09	Stop ring	-	-	-	2.080.30

nmrv	P	T	C	Commercial	063		071		080		090	
	9	013	01 N	Screw DIN 7991	M4x12	1	M5x12	1	M6x12	1	M6x12	1
	9	013	02 N	Hex screw DIN 931	M6x20	5	M6x20	5	M8x25	5	M8x25	5
	9	013	03 N	Hex screw DIN 931	M8x30	4	M8x30	4	M10x35	4	M10x35	4
	9	013	04 N	Screw DIN 916	-	-	-	-	-	-	M4x5	1
	9	013	05 N	Nut DIN 934/6	M8	4	M8	4	M10	4	M10	4
	9	013	06 N	Nut DIN 934/6	M6	5	M6	5	M8	5	M8	5
	9	013	07 N	Circlip DIN 472	35	1	40	1	52	1	52	1
	9	013	08 N	Oil seal DIN 3760	AS 20x35x7	1	A 22x40x7	1	AS 30x52x7	1	AS 30x52x7	1
	9	013	09 N	Oil seal DIN 3760	AS 25x40x7	1	AS 30x47x7	1	A 42x62x8	1	A 42x62x8	1
	9	013	10 N	O-ring	2262	1	2325	1	2400	1	2400	1
	9	013	11 N	Bearing	6202	1	6203	1	6205	1	6205	1
040	9	013	12 N	Hex screw DIN 931	M6x16	4	-	-	-	-	-	-
	9	013	13 N	Key DIN 6885	(Ø11) A 4x4x15	1	-	-	-	-	-	-
	9	013	13 N	Key DIN 6885	(Ø14) A 5x5x20	1	-	-	-	-	-	-
050	9	013	12 N	Hex screw DIN 931	M6x16	4	M6x25	4	-	-	-	-
	9	013	13 N	Key DIN 6885	(Ø11) A 4x4x15	1	(Ø14) A 5x5x20	1	-	-	-	-
	9	013	13 N	Key DIN 6885	(Ø14) A 5x5x20	1	(Ø19) A 6x6x30	1	-	-	-	-
063	9	013	12 N	Hex screw DIN 931	M6x16	4	M6x25	4	-	-	-	-
	9	013	13 N	Key DIN 6885	(Ø11) A 4x4x15	1	(Ø14) A 5x5x20	1	-	-	-	-
	9	013	13 N	Key DIN 6885	(Ø14) A 5x5x20	1	(Ø19) A 6x6x30	1	-	-	-	-
075	9	013	12 N	Hex screw DIN 931	-	-	M6x25	4	M8x25	4	M8x25	4
	9	013	13 N	Key DIN 6885	-	-	(Ø14) A 5x5x20	1	(Ø19) A 6x6x30	1	(Ø24) A 8x7x35	1
	9	013	13 N	Key DIN 6885	-	-	(Ø19) A 6x6x30	1	(Ø24) A 8x7x35	1	(Ø19) A 6x6x30	1
	9	013	13 N	Key DIN 6885	-	-			(Ø28) A 8x7x45	1	(Ø28) A 8x7x45	1

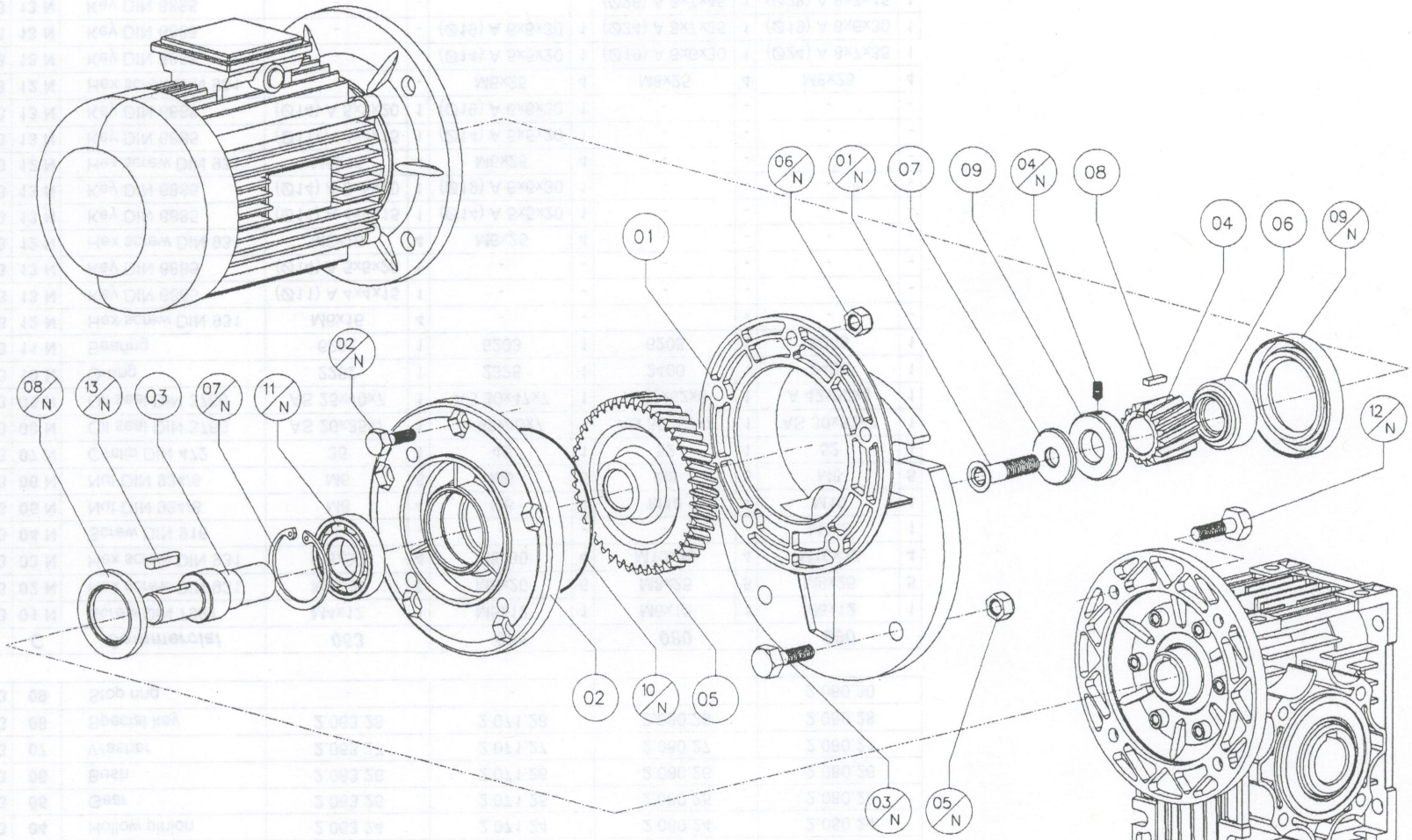
06/N
01/N
07
09
04/N
08
04
06
09/N
01
02/N
08/N
13/N
03
07/N
11/N
12/N
02
10/N
05
03/N
05/N

nmrv	P	T	C	Commercial	063		071		080		090	
090	9	013	12 N	Hex screw DIN 931	-	-	M6x25	4	M8x25	4	M8x25	4
	9	013	13 N	Key DIN 6885	-	-	(Ø14) A 5x5x20	1	(Ø19) A 6x6x30	1	(Ø24) A 8x7x35	1
	9	013	13 N	Key DIN 6885	-	-	(Ø19) A 6x6x30	1	(Ø24) A 8x7x35	1	(Ø19) A 6x6x30	1
	9	013	13 N	Key DIN 6885	-	-	-	-	(Ø28) A 8x7x45	1	(Ø28) A 8x7x45	1
105	9	013	12 N	Vis DIN 931	-	-	-	-	M8x25	4	M8x25	4
	9	013	13 N	Clavette DIN 6885	-	-	-	-	(Ø19) A 6x6x30	1	(Ø24) A 8x7x35	1
	9	013	13 N	Clavette DIN 6885	-	-	-	-	(Ø24) A 8x7x35	1	(Ø19) A 6x6x30	1
	9	013	13 N	Clavette DIN 6885	-	-	-	-	(Ø28) A 8x7x45	1	(Ø28) A 8x7x45	1
110	9	013	12 N	Hex screw DIN 931	-	-	-	-	M8x25	4	M8x25	4
	9	013	13 N	Key DIN 6885	-	-	-	-	(Ø19) A 6x6x30	1	(Ø24) A 8x7x35	1
	9	013	13 N	Key DIN 6885	-	-	-	-	(Ø24) A 8x7x35	1	(Ø19) A 6x6x30	1
	9	013	13 N	Key DIN 6885	-	-	-	-	(Ø28) A 8x7x45	1	(Ø28) A 8x7x45	1
130	9	013	12 N	Hex screw DIN 931	-	-	-	-	M8x25	4	M8x25	4
	9	013	13 N	Key DIN 6885	-	-	-	-	(Ø19) A 6x6x30	1	(Ø24) A 8x7x35	1
	9	013	13 N	Key DIN 6885	-	-	-	-	(Ø24) A 8x7x35	1	(Ø19) A 6x6x30	1
	9	013	13 N	Key DIN 6885	-	-	-	-	(Ø28) A 8x7x45	1	(Ø28) A 8x7x45	1

Via Giardini, 41 - 41040 Spezzano (MO) Italy
Tel. +39 0536819411 (sel. pass.)
Fax +39 0536844908 - 901
(Home page) www.motovario.it
(e-mail) motovario@motovario.it

ISO 9001 - Cert n°0129

LAFERTMOTORS

4.1.1 e

Operating Instructions

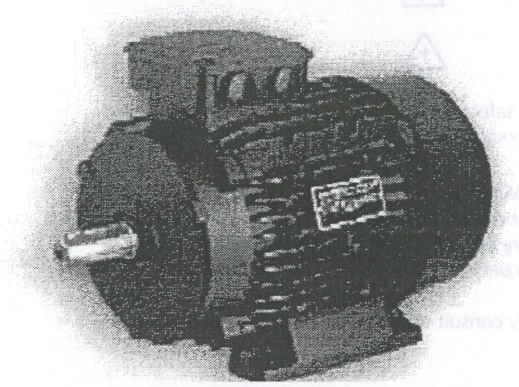

Three-phase cage motors

Single-phase motors

Three-phase brake motors

12/2005

LAFERTGROUP

14.15.1

Explanations regarding the safety measures and special instructions for three-phase motors, brake motors, single-phase motors and generators

Read these Operating Instructions before you transport, install, commission, maintain or repair industrial motors or generators.

These symbols will draw your attention to the safety measures and additional instructions given in these Operating Instructions.

Special instructions regarding safety and warranty: ⚠

Danger: ⚠

For reasons of protection of persons and objects, all the safety measures and additional instructions given in these Operationg Instructions must be strictly complied with.

⚠ ⚠ *Low-voltage machines have dangerous rotating and conductive parts, as well as possibly hot surfaces. All transport, installation, commissioning, maintenance and repair works have to be carried out exclusively by qualified personnel and checked by responsible experts (observe VDE 0105; IEC 364). Inappropriate use may cause major damage to persons and objects.*

Should additional data be required, you should immediately consult the manufacturer or an authorized service workshop.

⚠ ***All work on electrical connections to the motors and generators should only be carried out by qualified personnel.***

General information

Scope

These instructions refer to surface-ventilated three-phase and AC low-voltage cage induction motors and generators, IP 54 and IP 55 to DIN VDE 0530, part 5, EN 60034 and IEC 34-5. Higher degrees of protection are indicated on the rating plate.

These low-voltage machines are intended for industrial installations. They comply with the harmonized standards DIN VDE 0530/EN 60034. Observe any possible special prescriptions for their use. Air-cooled low-voltage machines are designed for operation at altitudes ≤ 1000 m above sea level and at ambient temperatures between -20° C and +40° C. Exceptions are stated on the rating plate.

⚠ *Observe especially different indications on the rating plate. The conditions at the place of use must coincide with all the data of the rating plate.*

The low-voltage machines are components of a machine according to the directive 89/393/EEC (machinery). The commissioning of this machine is forbidden until conformity of the final product with this directive is proved (observe EN 60204-1).

Transport

Should any damage be observed after delivery of the low voltage machine at its destination, these should be notified immediately to the transport company; avoid commissioning.

⚠ ***Lifting eyes***
Lift motors only on lifting eyes provided. Do not add any load to the motor. Lifting eyes are designed for the motor mass only. Should it be necessary, use appropriate cable guides.

⚠ ***Rotor locking device***
Motors with roller bearings are protected against bearing damage during transport by means of a locking device which has to be removed before putting the motor into operation. Close the fixing hole by means of the plug supplied. The locking device must also be used for any further transport of the motor.

14.15.2

Ventilation
The distance between air intake of the motor and walls or other machinery must be at least 1/4 of the diameter of the air intake opening. Cooling air flows from the non-drive end towards the drive end.

Air leaving the motor must not be drawn in again by the fan. Keep air inlets and outlets clean.

⚠ For vertical shaft-up designs, suitable protection must be provided at the mounting end so that no foreign matter can enter the ventilation hole. Such protection must, however, not affect the cooling and air leaving the motor/generator - or adjacent groups - must not be drawn in again.

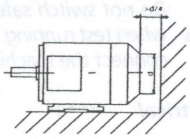

Condensation drain holes
Even after installation the condensation drain holes must be at the lowest point of the motor. They must be kept clean. Plug drain hole after each drainage.

Radio interference suppression
The motors meet the requirements of grade N to VDE 0875.

Installation and commissioning

Mechanical

Transmission elements

⚠ *Use elastic couplings only; rigid couplings require a special bearing design.*

When using transmission elements which provoke radial or axial shaft loads during operation (e.g. pulleys, gearwheels, etc.) take care that the permissible loads are not exceeded. Relevant data are given in the respective technical catalogue.

Rotors are at present dynamically balanced with half key. (As per DIN ISO 8821).

«H» or „blank" means balanced with *half key*
«F» means balanced with *full key*
«N» means *no key*

The state of balancing of the motor is indicated on the rating plate. When the motor is balanced with a half key (H), the coupling has also to be balanced with half key; machine the overhanging visible part of the key.

Remove anti-corrosion paint by means of a suitable solvent and grease the shaft extension. Use only suitable tools to mount or pull off pulleys or couplings, see Fig. 1-3, (heat to 80-100° C) and cover with a protection against accidental contact. Avoid unadmissible tension of the belts (technical catalogue).

By no means the bearings may be subjected to any pressure or shock.

⚠ Remove fan cover

Fig. 1
Mounting without female thread

Fig. 2
Mounting with female thread

Fig. 3
Pulling off

Substructure
Make sure that the feet or flanges are safely fixed and rest positively on their entire surface. Check also the exact alignment with direct coupling.

⚠ *All motor feet must rest positively on their entire surface to avoid distortion of the motor frame.*

Avoid resonance of the base with the turning frequency and double mains frequency. Turn the rotor by hand. Check the direction of rotation with the machine uncoupled (see page 4 - *Vibrations during operation*).

14.15.3

Alignment
When the motor is connected to the driven machine via a coupling, the shafts must be aligned radially and axially to each other. The dial gauges must be firmly secured. Measurements have to be taken at four points, displaced by 90°, while both coupling halves are turned simultaneously.

Angular alignment (Fig. 4)
Deviations are to be equalized by means of shims placed unter the motor feet. Permanent inaccuracies must not exceed 0.03 mm, referred to a diameter of 200 mm.

Parallel alignment (Fig. 5)
Deviations are to be equalized by placing shims under the motor. The remaining inaccuracies must not exceed 0.03 mm. The adjustment of the axial clearance between the coupling halves (dimension «E») is to be effected in accordance with the coupling manufacturer's specification.

⚠ *Re-check alignment with the machine at operating temperature.*

Combination of angular and parallel alignment (Fig. 6)
Fig. 6 shows a relatively simple method of combining the two measurements. The dial gauges are inserted into the corresponding screwed or clamped flat iron holders (e.g. by set screws).

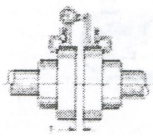

Fig. 4
Angular alignment

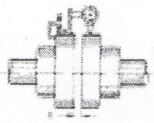

Fig. 5
Parallel alignment
(centre offset)

Parallel alignment
Angular alignment

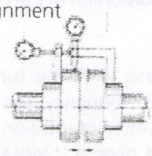

Fig. 6

Vibrations during operation
Vibration levels V_{eff} = ≤ 3.5 mm/s (P_N ≤ 15 kW) or 4.5 mm/s (P_N > 15 kW) of the coupled machine are not problematic. When there are differences in comparison with normal operation, such as higher temperature, noise, vibration, determine the cause and, if necessary, consult the manufacturer.

⚠ *Do not switch safety devices off, not even when test running. In the case of doubt, disconnect the machine.*

Electrical

Insulation resistance
Refer to page 7.

Voltage and winding connection
The admissible fluctuation between rated voltage and supply voltage is ± 5%; for rated frequency, ±2% is allowed. Observe different connection indications and data on the rating plate, as well as the connection diagram in the terminal box.

Connection
Choose cable cross-sections in accordance with the rated current. Not used cable entries must be closed by compression glands.

The terminal box can be turned by 90° or 180°.

⚠ *Work should only be carried out by qualified personnel, always with the machine out of operation, disconnected and previously secured against starting. This is also valid for auxiliary circuits (e.g. heaters). Make sure that there is no voltage!*

The supply cables must be connected with special care to ensure permanent and reliable contact (without loose cable ends); use suitable terminals for the connection cables.

Supply cables must be stress-relieved so that no cantilever loads are exerted on the terminals.

⚠ *Ensure a good connection of the protective conductor.*

The minimum safety distances between conductors and between those and earth should not exceed the following values: ≤ 550 V 8 mm; ≤ 750 V 10 mm; ≤ 1100 V 14 mm.

14.15.4

Make sure that no foreign matter is left in the terminal box, and that it is clean and dry. Cable entries which are not used and the terminal box itself have to be sealed dust and water-tight. In order to maintain the degree of protection, always make sure that the original gaskets are used when closing the terminal box.

Connect protective conductor here.

For the test run without drive elements, secure the key. Before commissioning brake motors, make sure that the brake is operating correctly.

Direction of rotation

Normally, the motors are suitable for both directions of rotation. Exceptions are indicated on the rating plate by an arrow. For the desired direction of rotation, the stator winding is connected as follows:

Connection of L1, L2, L3 to	Direction of rotation when viewing drive end
U1, V1, W1	clockwise
W1, V1, U1	counter-clockwise

Check of the direction of rotation, see below.

Reversing the direction of rotation

Mode of starting and winding	*Measures*
Direct-on-line starting and pole-changing motors with separate windings	Exchange two supply-cable conductors on the terminal board of the motor
Star/delta starting and pole-changing motors with Dahlander winding	Exchange two supply-cable conductors at the incoming supply to the contactor combination

Test

To check the direction of rotation, switch the properly connected but uncoupled motor quickly ON/OFF.

Y/Δ starting

In order to avoid excessive transient currents and torques, before changing over from Y to Δ, wait until the starting current of the Y stage has died down or run-up has concluded (e.g. change over when rated speed is reached).

Motor protection

Connect semiconductor temperature detectors to the release device in accordance with the wiring diagram. Continuity test, if necessary, to be carried out by means of a measuring bridge only (max. 2.5 V).

In order to achieve full thermal protection, an additional thermally delayed overload protection must be installed (Fig. 7). Normally, fuses alone protect only the supply system not the motor.

Example

Contactor with overcurrent relay
Thermistor protection and fuse

Fig. 7

Maintenance

Before carrying out any work on the motor, disconnect it and secure it against restarting.

Exception: *In motors with greasing device, regrease the bearings with the motor running.*

Caution, danger of accidents: Take care not to come in contact with moving parts!

Cleaning

Depending on the local conditions, air passages should be cleaned regularly.

Bearing lubrication

Observance of regreasing intervals is vital for the operational reliability of the motor!

14.15.5

Maintenance of bearings

Ball bearing with permanent lubrication. Under normal operating conditions two-pole motors can be operated for about 10,000 hours, motors with more than 2 poles for about 20,000 hours without maintenance. However, the maximum period of maintenance-free operation is four years. The ball bearings and the bearing caps should then be washed with petrol or benzene. If necessary, replace the bearings. Fill the spaces between the balls and the roller tracks as well as the grease compartments half with grease. Coat shaft bushings in the bearing caps or endshields with a thin layer of grease. Permanently greased bearings (2RS and 2Z bearings) cannot be washed and regreased. Such bearings must therefore be replaced.
To dismantle the bearings, use pressing screws or other appropriate devices.

Ball bearings with regreasing device and grease slinger

Regreasing interval and required quantity of grease is indicated on the rating plate. Bearings and bearing caps must be washed with petrol or benzene when they have been regreased twelve times.

⚠ *Used petrol or benzene in air-tight tanks should be disposed of as special refuse with the marking «Petrol» or «Benzene».*

Afterwards, with the outer bearing cap open but the inner cap screwed on, the rotor should be turned slowly and grease pressed in through the regreasing device until approximately half the empty space between the rolling elements and the roller tracks is filled with grease.

⚠ *If a grease with a different soap base is to be used, clean bearing seats throroughly. Make sure that the bearing grease used meets the following requirements:*

Pour point	*approx. 190° C*
Ash content	*4 %*
Water content	*0.3 %*

Lubricant

Grease K 3 N to DIN 51825 (lithium-based, water resistant to DIN 51807 Part 1, grade 0 or 1). Regrease only with a similar grease (e.g. Esso Unirex N 3, Shell-Alvania G 3, Esso Beacon 3, Klüber HQ72-102 etc.).

Repair instructions

⚠ *Any repair work within the guarantee period is subject to the approval of the motor manufacturer.*

General

It is strongly recommended that only original spares be used for motor repairs.

It is work which do not affect the explosion protection and is, therefore, not subject to special regulations

e.g. Replacement of gaskets or joints
Repair or replacement of fan or fan cover
Replacement of bearings
Replacement of terminal board

Special repairs

It is work which can affect the explosion protection, e.g. work on stator or rotor windings. Unless the repair is carried our by ourselves, the proper execution of the work in accordance with the relevant regulations must be certified by an authorized expert.

According to EN 50019 or EN 50014, any repair of this kind must be stated on an addtional plate, permanently fixed to the motor.

Instructions for storage of motors

For prolonged storage of electric motors (e.g. spare motors), the following precautions must be observed:

Place

Make sure that they are kept in a dry and dust-free place with minimum vibration ($V_{eff} \leq 0.2$ mm/s) (damage to stalled bearings).
Ambient temperature +10° C to +40° C, relative humidity < 50 %

Rotor locking device

On motors with roller bearings, fix the rotor in place by means of the locking device, to protect the bearings against damage due to vibration. Motors shipped on vibration dampers should also be stored in this condition.

14.15.6

Where pulleys, half couplings, etc. are already mounted on the shaft extension, fit the locking device or place the motor on vibration dampers, if possible.

⚠ *Use dampers and locking device also for any future transport of the motor.*

Check before commissioning:

Bearings
Before commissoning a motor that has been stored for more than 4 years, check the bearings.

For motors without regreasing device, grease has to be renewed or bearings have to be changed after 2 years at the latest.

⚠ *Even minor corrosion can considerably shorten the service life of the bearings. Bearings that need not be replaced should be packed with new grease.*

⚠ *For grease type and quantity, refer to the rating plate (on the motor) and to «Bearing lubrication, Lubricant» on page 6 of this Operating Instructions.*

Motors with regreasing device have to be regreased after 2 years at the latest with the double quantity of grease indicated on the nameplate. Hereby the rotor has to be rotated. When motors are stored for over 4 years, change grease.

The rotor has to be rotated every month by approx. 30 degrees, in order to avoid compression spots on the bearings due to static load.

⚠ *For rotating the rotor loosen, but not remove the locking device fittet. After the rotation procedure, retighten the locking device.*

Insulation resistance

⚠ *Before commissioning check the insulation resistance. With values ≤ 1kΩ per Volt rated voltage, dry the winding.*

Check the insulation resistance of each phase against earth by means of a hand-driven generator (max. 630 V DC) until the measured value is constant. The insulation resistance of new windings is above10 MΩ. The resistance can be lowered considerably by moisture.

If, at room temperature, the resistance is below 0.5 MΩ, the winding must be dried. In this case the winding temperature must not exceed 80° C. For drying connect the space heater or another heating device, or apply an AC voltage of 5 or 6 % (connect in delta) of the rated motor voltage to terminals U1 and V1. Repeat the measurement. The motor can be put into operation when the resis-tance is above 0.5 MΩ.

Insulation resistance is temperature-dependent, i.e. if the temperature is increased/decreased by 10 K, the resistance value is halved/doubled, respectively.

Wiring diagrams

Three-phase cage motors

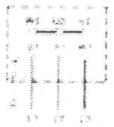

Star connection

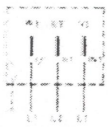

Delta connection

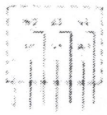

Connection to star-delta starter

Three-phase pole-changing motors

In Dahlander connection: In the type designation the high number of poles = low speed is shown first (e.g. AM 160 ...8/4)

With 2 separate windings: In the type designation the low number of poles = high speed is shown first (e.g. AM 160 ... 4/8)

For pole-changing motors please observe the wiring diagram in the terminal box of the motor

Single-phase cage motors

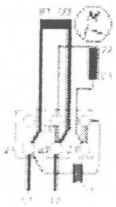

Clockwise

Anticlockwise

14.15.7

Lafert S.p.A.
Via J.F. Kennedy, 43
I - 30027 San Donà di Piave/Venezia
Tel. +39-0421 229 611
Fax +39-0421 222 908
e-mail: info.lafert@lafert.com

www.lafert.com

4.1.1-12/2005

LAFERTGROUP

14.15.8

I.O. 0401-05 Edition 12-2005	SAFETY, INSTALLATION AND MAINTENANCE INSTRUCTIONS FOR BRAKE MOTORS WITH LOW-TORQUE D.C. BRAKE AND REDUCED OVERALL DIMENSIONS	LAFERTMOTORS

General safety instructions

Danger: electric rotating machine have dangerous rotating and conductive parts, as well as possibly hot surfaces..
The commissioning of electric motor is forbidden until the machine on which it has been incorporated has been declared conforAMS to 98/37/CEE directive (Machine Directive).
All transportation, storage,, installation, commissioning, inspection, maintenance and repair works have to be carried out exclusively by qualified personnel (definition according to IEC 364) according to EN 60204-1.
Improper use may cause major damage to persons and objects.

Motors meet the requirements of Low Voltage Directive 73/23/CEE and are therefore CE marked on name plate.
Operating conditions have to be according to EN 60034-1.

Brake motors installation

The responsability of the correct brake functionality is completely of the installer, who has to:

- comply with the wiring diagram placed inside the terminal box
- supply the rectifier / brake according to the data on the nameplate
- check the correct brake functionality
- check that the brake torque satisfies the application needs
- supply in a correct way auxiliary equipments, if any (see specific documentation)

Earthing has always to be carried out (according to local regulations) before the connection to the main.
The supply of motor, rectifier/brake, auxiliary equipments (if any) has to be made using cables of suitable section in order to avoid overheating and/or too high voltage drop.
Pay attention not to alter the protection degree (use only original gaskets).
In case of inverter supply follow correctly the wiring instructions of the inverter manufacturer for the motor and separately supply (directly from the main) the rectifier/brake.
For any special design see specific documentation.
The good brake running in time depends on a correct periodical maintenance.

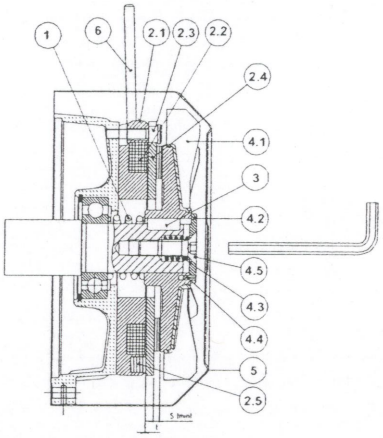

Main components list

1 Main contrast spring
2.1 Magnet casing
2.2 Brake coil
2.3 Fastening screw
2.4 Mobile anchor with friction surface
2.5 Braking spring
3 Key
4.1 Fan
4.2 Washer with spigot
4.3 Auxiliary contrast spring
4.4 Elastic pin
4.5 Screw TSPEI UNI 5933
5 Fan cover
6 Hand release (on request)

Spare parts list

1 Main contrast spring
2 Preassembled part
4 Fan with braketightening/air gap adjustment kit
5 Fan cover
6 Hand release (always with apt fan cover)

Periodical maintenance of brake motors

Every maintenance work on brake motors should only be carried out by qualified personnel, always with the machine out of operation, disconnected and previously secured against starting.

Low-torque d.c. brake with reduced overall dimensions (with electromagnetic brake braking in case of failure supply) have fixed braking torque (no braking torque regulation is possible) that means that the periodical maintenance consists on checking that the air-gap "t" and the minimum friction surface thickness "S_{min}" are according the following table:

Brake size	Motor size	t[1] [mm]	S_{min}[2] [mm]	Socket head screw key	ϑ
63	63	0,25 ... 0,5	1	2,5	180°
71	71	0,25 ... 0,5	1	3	180°
80	80	0,25 ... 0,5	1	4	120°
90	90	0,25 ... 0,5	1	5	120°
100/112	100	0,3 ... 0,55	1	6	120°
100/112	112	0,3 ... 0,55	1	6	120°
132	132	0,35 ... 0,6	1	8	120°

1) Refer to minimum value
2) Minimum thickness of friction surface (for lower values it is necessary to replace the preassembled part)

Too high air-gap values could produce a noisy operation and even cause the brake not to be released; excssive air-gap values can cause the brake not to work

Air-gap radjustment with mounted fan cover (std design):
tighten down the screw 4.5 completely without forcing using the socket head screw key referred to the table and then unscrew of the ϑ angle written on table, that correspond to the minimum air gap value.

The values of the air-gap of and the minimum friction surface thickness written on the above table are applicable also for other brake tightening/air gap adjustment designs

Occasionally we recommend to use an air jet to eliminate dust or other particles that may have settked on the braking surface.
After several air-gap adjustments verify that the thickness of the friction surface is no lower the minimun value stated in the above table; if needed replace the fan.

Any repair work within the guarantee period is subject to the motor manufacturer approval.
For any brake motors repair use only original spare parts.

General safety instructions

Danger: electric rotating machines have dangerous rotating and conductive parts, as well as possibly hot surfaces.

The commissioning of electric motor is forbidden until the machine on which it has been incorporated has been declared conform to 98/37/CEE directive (Machine Directive).

All transportation, storage, installation, commissioning, inspection, maintenance and repair works have to be carried out exclusively by qualified personnel (definition according to IEC 364) according to EN 60364 ;

improper use may cause most dangerous damages to persons and objects.

Motors meet the requirements of Low Voltage Directive 73/23/CEE and are therefore CE marked only if the operating conditions have to be according to EN 60034-1.

Brake motors installation

The responsibility of the correct brake functionality is completely of the installer, who has to:

- comply with the wiring diagram placed inside the terminal box
- supply the rectifier / brake according to the data on the nameplate
- check the correct brake functionality
- check that the brake torque satisfies the application needs
- supply in a correct way additive equipments, if any (see specific documentation)

Earthing has always to be carried out (according to local regulations) before the connection to the main.

The supply of motor, rectifier/brake, auxiliary equipments (if any) has to be made using cables or suitable section in order to avoid overheating and/or too high voltage drop.

Pay attention not to alter the protection degree (use only original pack-ets).

In case of inverter supply follow carefully the wiring instructions of the inverter manufacturer for the motor and brake supply (directly from the main) the rectifier/brake.

For any special design see specific documentation.

The good brake running is take depends on a correct periodical maintenance.

Main control parts list

1 Main control spring
2.1 Magnet casing
2.2 Brake coil
2.3 Fastening screw
2.4 Mobile anchor with friction surfaces
2.5 Braking spring
3 Key
4.1 Fan
4.2 Washer with spacer
4.3 Auxiliary contact spring
4.4 Elastic pin
4.5 Screw TEFEI UNI 5931
5 Fan cover
6 Hand release (on request)

Spare parts list

1 Main control spring
2 Friction lining pad
4 Fan with positive-locking air gap adjustment kit
5 Fan cover
6 Hand release (always with dpt fan cover)

Periodical maintenance of brake motors

Every maintenance work on brake motors should only be carried out by qualified personnel, always with the machine out of operation, disconnected and previously secured against starting.

Low-torque d.c. brake with reduced overall dimensions (with electromagnetic brake, braking in case of failure supply) have fixed braking torque (no braking torque regulation is possible) that means that the periodical maintenance consists on checking that (the air-gap, "I" and the minimum friction surface thickness "S_{min}" are according the following table:

Brake size	Motor size	I [mm]	S_{min} [mm]	Socket head screw key	φ
63	63	0,25 - 0,5	1	2,5	180°
71	71	0,25 - 0,5	1	3	180°
80	80	0,25 - 0,5	1	4	120°
90	90	0,25 - 0,5	1	5	120°
100/112	100	0,3 - 0,55	1	6	120°
100/112	112	0,3 - 0,55	1	6	120°
132	132	0,3 - 0,6	1	8	120°

1) Refer to minimum value
2) Maintain thickness of friction surfaces (or lower values if it is necessary to replace the pressure/sliding pad)

⚠ Too high air-gap values could produce a noisy operation and even cause the brake not to be released, excessive air-gap values can cause the brake not to work

Air-gap measurement with covered fan cover (and closing):

Rotate down the screw 4.5 completely without turning using the socket head screw/key referred to the table and then unscrew of the φ angle within on table, that corresponds to the minimum air gap value.

The values of the air-gap of and the minimum friction surface thickness within on the above table are applicable also for other brake mounting gap adjustment devices.

Occasionally we recommend to use an air jet to eliminate dust or other particles that may have settled on the braking surfaces.

After several air gap adjustments verify that the thickness of the friction surface is no lower the minimum value stated in the above table. If needed replace the fan.

⚠ Any repair work within the guarantee period is subject to the prior manufacturer approval.

For any brake motors repair use only original spare parts.

Chapter 15 PAINT SPEC

MANUFACTURER/DISTRIBUTOR:
LA MAISON DU PEINTRE
9795, WAVERLY
MTL.QUEBEC H3L 2V7
PH:514-381-8524

15.1 HE-2A PIPING COATING AND LINING COLOR SELECTION (EPOX)

END OF CHAPTER 15

Subject: [Fwd: WWTP Iqaluit - SIFEC Fw: waste water process piping coating and l ining E-2a submital]
From: guy fauteux <sifec@NetAxis.ca>
Date: Fri, 26 Aug 2005 08:53:22 -0400
To: guy-fauteux <sifec@NetAxis.ca>

Should have a cut sheet from the supplier. Please don't include the email.

-------- Original Message --------
Subject: WWTP Iqaluit - SIFEC Fw: waste water process piping coating and l ining E-2a submital
Date: Tue, 23 Aug 2005 16:02:34 -0400
From: Syme, Shannon <Shannon.Syme@earthtech.ca>
To: 'Martin Simard' <msimard@kudlik.biz>, 'sifec@netaxis.ca' <sifec@netaxis.ca>
CC: Cook, Duncan <Duncan.Cook@earthtech.ca>, Prosko, Glenn <Glenn.Prosko@earthtech.ca>

Hi Guy/Martin,

The rust oleum #9100 and #9102 are acceptable for the process piping coating and lining. Consider this shop drawing submission stamped " NO exceptions Taken".

As far as the paint colors go, the standard colors listed below are acceptable for the commodities listed.

Cheers,
Shannon

From: Martin Simard [mailto:msimard@kudlik.biz]
Sent: Tuesday, August 23, 2005 6:33 AM
To: Syme, Shannon
Cc: Cook, Duncan; Prosko, Glenn
Subject: WWTP Iqaluit - SIFEC Fw: waste water process piping coating and lining E-2a submital

----- Original Message -----
From: Guy Fauteux
To: Prosko, Glenn ; carl@devcar.net ; Martin Simard
Sent: Monday, August 22, 2005 9:19 AM
Subject: waste water process piping coating and lining E-2a submital

We are proposing rust oleum #9100 and 9102 for this task
If possible ET could select one of their standard colour
RS (charcoal) Navy Gray 9186402
PE and SRS (brown) Tile red 916842
PA white 9192402
VAC black 9179402
note: Any color is also available pelase supply color sample if different
Guy
http://www.rustoleum.com/product.asp?frm_product_id=102&SBL=2
<http://www.rustoleum.com/product.asp?frm_product_id=102&SBL=2>

Rust-Oleum
Brands

Consumer

Premium Rust Protection for Metal Surfaces | Multi-Purpose Coatings for Wood, Metal, Masonry, and More | No Odor, Zero VOC, Zero HAP Industrial Coatings | Maintenance Floor Coating | Heavy Duty Floor Coatings | Ultimate Corrosion Protection for Large Industrial Projects | Cleaner / Degreaser

Products
Select
What's Your Surface /

High Performance
Industrial DTM Epoxy Mastic (9100 System)

- Four activators are available for a variety of conditions:
  - 9101402 Standard Activator
  - 9102402 Immersion Activator

Industrial DTM Epoxy Matic

Aerosols
· Galvanizing Compound Aerosol
· Industrial Enamel Aerosol (V2100/2200 System)

15-
S
1/3

Application?
Select

Choose your coating type
Select

Where to Buy?
Select

Got a question?
Rust-O University
Select

Technical Documents
Select

Language
English

- 9103402 Low Temperature Activator
- 9104402 Fast Cure Activator

- Two-component high solids polyamine converted epoxy
- Direct-to-metal and tightly adhered rusted metal
- Superior long-term solvent, chemical and abrasion resistance
- Maximum corrosion protection
- Tough film for excellent durability, dries to 5-8 mils
- Convenient 1:1 mixing ratio of base and activator
- Provides the wear and abrasion-resistance of multi-coat epoxy coatings
- In severe industrial environments or over abrasive-blasted surfaces, a second coat is required for optimal protection
- USDA acceptable[1] and Agriculture Canada approved

Companion Products:
Industrial DTM Acrylic Enamel
Industrial Speedy-Dry DTM Acrylic Enamel
Industrial High Gloss Urethane
Industrial Low VOC Urethane
Industrial DTM Urethane Mastic

[1] Can be used in USDA facilities based on FSIS Directive 11,000.4 (Rev. 1), November 24, 1995.

Tint bases also available for custom colors.

Available Colors:

9115402 Aluminum	9179402 Black	9171402 Dunes Tan	9145402 Equipment Yellow	9122402 Marlin Blue	9186402 Navy Gray	9165402 Regal Red	9125402 Safety Blue
9133402 Safety Green	9144402 Safety Yellow	9182402 Silver Gray	9168402 Tile Red	9192402 White			

Technical Documentation - MSDS

Material Safety Data Sheet
Rust-Oleum High Performance Epoxy Deep Tint Base

Material Safety Data Sheet
Rust-Oleum High Performance Epoxy Fast Cure Activator (9104)

Material Safety Data Sheet
Rust-Oleum HP Epoxy Immersion Activator

Material Safety Data Sheet
Rust-Oleum High Performance Epoxy Low Temp Activator (9103)

Material Safety Data Sheet
Rust-Oleum High Performance Epoxy Light Tint Base

Material Safety Data Sheet
Rust-Oleum High Performance Epoxy Masstone Tint Base

Material Safety Data Sheet
Rust-Oleum High Performance Epoxy Red Tint Base

Industrial DTM Epoxy Matic

· Industrial Enamel Primer Aerosol (V2100 System Primer)
· Industrial Farm Equipment Aerosol
· Industrial Hammered Aerosol
· Industrial High Heat Coating Aerosol
· Inverted Marking Paint Aerosol (V2300 System)
· Inverted Striping Paint Aerosol (2300 System)
· V2100 System - Rust Reformer Aerosol

Companion Products
· Marking Pistol
· Marking Wand
· Striping Machine

Gallons - Acrylics
· High Humidity Flash Rust Preventative WB 400
· Industrial Acrylic Hardener
· Industrial Acrylic Primers
· Industrial DTM Acrylic Enamel (3700 System)
· Industrial Quick-Dry Production Primer
· Industrial Speedy-Dry Acrylic Enamel Primer
· Industrial Speedy-Dry DTM Acrylic Enamel (3100 System)

Gallons - Epoxy
· Heavy-Duty Epoxy Primer
· Industrial Coal Tar Epoxy (C9578)
· Industrial DTM Epoxy Mastic (9100 System)
· Industrial Epoxy Primers (HS9300/9300 System Primers)
· Industrial Low VOC DTM Epoxy Mastic
· Industrial Potable Water Coating (W9200 System)
· Industrial Water-Based Epoxy (5300 System)

Gallons - Industrial Enamel
· 2083 Transporation Primer
· 2500 System - 250 VOC Alkyd Enamel
· Heavy Duty Rust Inhibitive Primers (7400 System Primers)
· High Solids, Quick Dry Low VOC Primers (7400 System Primers)
· Industrial Enamel (7400 System)
· Industrial Enamel Tint Base High Gloss Finishes

15-
S 2/3

Material Safety Data Sheet
Rust-Oleum High Performance Epoxy Standard Activator (9101)

Material Safety Data Sheet
Rust-Oleum High Performance Epoxy Yellow Tint Base

Material Safety Data Sheet
Rust-Oleum High Performance Industrial DTM Epoxy Mastic

Material Safety Data Sheet
Rust-Oleum High Performance Industrial DTM Epoxy Mastic Aluminum

Technical Documentation - TDS
Technical Data Sheet
2032990 RO-51

Click on the icon to the left to get Adobe's free Acrobat Reader

· Industrial Food & Beverage Coating (8400 System)
· Industrial Low VOC Enamel (3400 System)
· Industrial Low VOC Enamel Primer
· Quick Dry Primers (7400 System Primers)
· Red Damp Proof Primer (7400 System Primer)
· Shop Coat Primers (7400 System Primers)
· Speedy-Dry Enamel (1500 System)
· Stops Rust Speedy-Dry System 1573 Rust-Inhibitive Primer
· Stops Rust Speedy-Dry System HS 1573 Rust-Inhibitive Primer
· Zinc Chromate Primers (7400 System Primers)

Gallons - Industrial High Heat Coatings
· General Purpose Leafing Aluminum & Heavy-Duty Aluminum (4200/4300 System)
· Gray Zinc-Sele (4200/4300 System)
· High Heat Coatings (4200/4300 System)
· Pure Silicone Aluminum (4200/4300 System)

Gallons - Specialty
· Cold Galvanizing Compound
· Industrial Rust-Reformer®
· Traffic Zone Striping Paint

Gallons - Urethane
· Industrial DTM Urethane Mastic (9800 System)
· Industrial High Gloss Urethane (9400 System)
· Industrial Low VOC Urethane (9700 System)

Industrial Urethane Accelerators and Additives
· Rust-O-Thane(tm) Accelerator 202548
· Rust-O-Thane® System 9402 Accelerator
· Rust-O-Thane® System 9404 Leveling Additive

15

S 3/3

635-592 Mandarine fluorescent

635-550 Or métallique

635-715 Rouge fluorescent

635-110 Ultra blanc brillant

635-120 Aluminium

635-150 Ultra blanc mat

635-180 Noir brillant

635-190 Noir mat

635-240 Amande brillant

635-350 Bleu pur brillant

635-480 Vert forêt brillant

635-530 Jaune vif brillant

635-590 Orange brûlé brillant

635-616 Gris minerai brillant

635-720 Rouge éclatant brillant

635-730 Bourgogne brillant

635-985 Brun foncé brillant

635-340 Bleu Ford

635-430 Vert John Deere

635-520 Jaune John Deere

635-735 Rouge Harvester

OSEZ LA COULEUR !

Permettez-vous toutes les audaces avec une palette de plus de 1 000 couleurs.

CONSULTEZ VOTRE MARCHAND.

chap. 15

Maison du peintre / Sauve

SYSTEMS	Gray	Silver Gray	Dove Gray	Smoke Gray	Navy Gray	Machine Tool Gray	Light Neutral Gray	Dunes Tan	Chestnut Brown
Industrial Enamel		906			975	904	7280‡‡	865	977
3400 Low VOC Industrial Enamel (<340g/l)		3482			3486			3471	3477
7600 Low VOC Industrial Enamel (<420g/l)		7682			7686			7671	7677
1500 Speedy Dry Enamel		1584			1586				
Hard Hat® Sprays		2183*	2184	2188	2187*			2171*	2175
3100 Speedy Dry Water-Based Acrylic Enamel					3186			3171	
5200 High Performance Acrylic Enamel		5282			5286	5288		5271	5277
5300 Water-Based Epoxy		5382						5371	
9100 High Performance Epoxy		9182			9186			9171	
9200 High Build Epoxy (potable)								9271	
9300 Heavy-Duty Epoxy	9382				9386			9371‡	
9500 High Build Epoxy								9571‡	
9400 Rust-O-Thane® Polyurethane		9483							
9700 High Solids Polyurethane		9782							
9800 High Build Urethane Mastic		9882			9886			9871	
4200 & 4315 Heat Resistant	4286								
6000 Moderate-Duty Water-Based Epoxy Floor		6082‡‡			6086‡‡			6071‡‡	
6500 Heavy-Duty 100% Solids Epoxy Floor		6582			6586			6571	
AS5400, AS5420, AS6000, AS6500 & AS9100 Anti-Slip Floor Coverings		AS5482†, AS6082†, AS6582‡‡, AS9182†			AS5486†,AS6086†, AS6586‡‡, AS9186†			AS5471†,AS6071†, AS6571‡‡,AS9171†	

Note: Color names may differ between systems.

SYSTEMS	Black	Clear	White	Colonial Ivory	Safety Blue	Safety Green	Safety Yellow	Safety Orange	Safety Red
Industrial Enamel	412†, 634	717	2764†, 2766, 7290‡‡	862	925	933	944	956	964
3400 Low VOC Industrial Enamel (<340g/l)	3478†,3479		3492		3425	3433	3444	3455	3464
7600 Low VOC Industrial Enamel (<420g/l)	7679		7692		7625	7633	7644	7655	7664
1500 Speedy Dry Enamel	1579		1590				1545		
Hard Hat® Sprays	2178*†, 2179* 2378†^^,2177^^	2102	2190*, 2192*, 2391†^^, 2392^^		2124*	2133*	2143*, 2344^^	2155*,2354^^	2163*,2363^^ 2364^^
3100 Speedy Dry Water-Based Acrylic Enamel	3179		3192		3125	3133	3144		
5200 High Performance Acrylic Enamel	5278†, 5279 5274‡‡		5290†, 5292 5291†,5293‡‡		5225	5233	5244	5255	5264
5300 Water-Based Epoxy	5379		5392				5344		
9100 High Performance Epoxy	9179		9192		9125	9133	9144		
9200 High Build Epoxy (potable)			9292						
9300 Heavy-Duty Epoxy			9392						
9500 High Build Epoxy									
9400 Rust-O-Thane® Polyurethane	9479	9410	9492		9425				
9700 High Solids Polyurethane	9779	9710	9792		9725				
9800 High Build Urethane Mastic	9879		9892		9825	9833	9844		

Green	Vista Green	Cascade Green	Forest Green	Hunter Green	Green Zinc Sele®	Pleasant Green	National Blue	Marlin Blue	Yellow	Caution Yellow	Yellow
7434	935	868	1282			7232‡‡	721	866	7446		
			3438				3427	3423	3446		
			7638				7627	7623			7643
2134			2137*	2138			2125, 2324†^^	2123, 2326†^^	2148*††, 2348†^^	2345^^	
5234	5235										
			5237				5227	5222	5248		
						5331		5323			5343
								9122			
								9222			
	9335				9334	9331		9322			
								9522††			
									9745		
								9822			
						4233					
								AS5420†			

Safety Purple	Fluorescent Green	Fluorescent Yellow	Fluorescent Orange	Fluorescent Red	Fluorescent Red Orange	Blue Aluminum	Green Aluminum	Aluminum Alumi-NON™	International	Fire Hydrant Red	Tile Red
						1020	1030	470, 473	559	1210	745
								3415		3465	
										7665	
								1510		1565	
2167	2233, V2333^^	2242	2255, 2355^^	2264	2358^^			2115*, 2116 2118‡	2156	2164*	
								3115		3165	
								5215	5256	5265	5268
											5368
								9115		9165	9168
										9465	
										9765	
										9865	
								9815			9868
								4215, 4315			

ant Green	National Blue	Marlin Blue	Yellow	Caution Yellow	Yellow	Equipment Yellow	Equipment Orange
232‡‡	721	866	7446				
	3427	3423	3446			3445	3456
	7627	7623			7643	7645	7656
	2125, 2324†^^	2123, 2326†^^	2148*††, 2348†^^	2345^^			
	5227	5222	5248				5258†
5331		5323			5343		
		9122				9145	
		9222					
9331		9322					
		9522††					
			9745				
		9822				9845	
42							
		AS5420†					

Aluminum	Green Aluminum	Aluminum Alumi-NON™	International	Fire Hydrant Red	Tile Red	Old Caterpillar Yellow	New Caterpillar Yellow
1020	1030	470, 473	559	1210	745	7448	7447
		3415		3465			
				7665		7648	
		1510		1565			1547
		2115*, 2116 2118‡	2156	2164*			2147
		3115		3165			3147
		5215	5256	5265	5268		5247
					5368		
		9115		9165	9168		
				9465			
				9765			
				9865			
		9815			9868		
		4215, 4315					
					6068††		

* Also available in Low-VOC Version to comply with VOC regulations in California; add V-prefix to designation when ordering.

^^ Marking Sprays comply with VOC regulations in California.

† Matte finish.

†† Slightly darker than chip.

‡ Slightly more yellow than chip.

‡‡ Semi-gloss finish.

ATTENTION

Colors of actual products may not be exact matches to the chips shown as chips change with age, very minor differences may exist between systems and production batches may vary slightly. Offsets of white may differ more than offsets in other colors. If color match is very critical, confirm with a test application prior to use.In addition to these ready-mix colors, hundreds of other colors can be made quickly in most systems with the Rust-Oleum Field Tint

1601◇◆	1602◇◆	1603	1604	1611◇◆	1612◇◆	1613◇◆	1614◇
1621◇◆	1622◇◆	1623◇	1624◆	1701	1702	1703	1704
1801	1802▲	1803	1804	1811	1812▲	1813	1814
1821	1822▲	1823	1824	1831	1832	1833	1834
1841	1842	1843	1844	1851	1852	1853	1854
1861	1862	1863	1864	1901	1902▲	1903	1904
1911	1912	1913	1914	1921▲	1922▲	1923	1924
1931	1932	1933	1934	1941	1942	1943	1944
1951	1952	1953	1954	2001	2002	2003◇◆	2004◇◆
2011	2012	2013	2014	2021	2022	2023	2024

1601◇◆	1602◇◆	1603	1604	1611◇◆	1612◇◆	1613◇◆	1614◇
1621◇◆	1622◇◆	1623◇	1624◆	1701	1702	1703	1704
1801	1802▲	1803	1804	1811	1812▲	1813	1814
1821	1822▲	1823	1824	1831	1832	1833	1834
1841	1842	1843	1844	1851	1852	1853	1854
1861	1862	1863	1864	1901	1902▲	1903	1904
1911	1912	1913	1914	1921▲	1922▲	1923	1924
1931	1932	1933	1934	1941	1942	1943	1944
1951	1952	1953	1954	2001	2002	2003◇◆	2004◇◆
2011	2012	2013	2014	2021	2022	2023	2024

All of the colors can be prepared in the desired system by volumetric addition of colorants to the appropriate base. The [illegible]tric formula for each color is contained in two separate formula books - one for all **Solvent-Based Systems** and one for all **Water-Based Systems**. Most systems are available in both one-gallon and five-gallon cans.

The colors shown herein should be considered close representations of the final color but not necessarily an exact match. Application and mixing conditions are outside of our control and may cause slight color variation; also color chips may change slightly with age.

COLORS FOR HEAVY DUTY PROTECTION

1111 1112 1113 1114

1201▲ 1202◇◆ 1203◇ 1204◇

1221◇ 1222◇ 1223◇◆ 1224◇◆

1241 1242◇◆ 1243◇◆ 1244◇

1311 1312 1313 1314

1331 1332 1333 1334

[illegible]▲ [illegible]◇ 1413◇▲ 1414◇▲

[illegible] interior use or sheltered exterior use only in order to achieve maximum lightfastness. These are marked by a triangle (▲ *See Formula Book for details.*

For full information on the Rust-Oleum Tint Systems, refer to the formula books and Rust-Oleum technical and promotional literature.

1101 1102 1103 1104

1121 1122◇ 1123 1124

1211◇ 1212◇◆ 1213◇◆ 1214◇

1231 1232◆ 1233◇◆ 1234◇◆

1301 1302 1303 1304

1321 1322 1323 1324

1401▲ 1402▲ 1403◇◆▲ 1404◇◆

1421 1422▲ 1423▲ 1424

2031◆	2032	2033◇	2034◆	2041	2042	2043	2044
2051	2052	2053	2054	2061	2062◇	2063	2064
2071	2072	2073	2074◆	2081◇	2082◇◆	2083	2084
2091	2092	2093	2094	2101	2102	2103	2104
2111	2112	2113	2114	2121	2122	2123	2124
2131	2132	2133	2134	2141	2142	2143	2144
2201	2202	2203	2204	2211	2212	2213	2214
2221▲	2222	2223	2224	2231	2232	2233	2234
2301	2302	2303	2304	2311	2312	2313	2314
2321	2322	2323	2324	2401	2402	2403	2404
2411	2412	2413	2414	2421	2422▲	2423	2424
2431	2432	2433	2434	2441	2442	2443	2444

1431	1432▲	1433	1434
1511◇◆	1512◇◆	1513◇◆	1514◇
1601◇◆	1602◇◆	1603	1604
1621◇◆	1622◇◆	1623◇	1624◆
1801	1802▲	1803	1804
1821	1822▲	1823	1824
1841	1842	1843	1844
1861	1862	1863	1864
1911	1912	1913	1914
1931	1932	1933	1934
1951	1952	1953	1954
2011	2012	2013	2014

1501▲	1502▲	1503▲	1504◆
1521◇◆	1522◇◆	1523◇◆	1524◆
1611◇◆	1612◇◆	1613◇◆	1614◇
1701	1702	1703	1704
1811	1812▲	1813	1814
1831	1832	1833	1834
1851	1852	1853	1854
1901	1902▲	1903	1904
1921▲	1922▲	1923	1924
1941	1942	1943	1944
2001	2002	2003◇◆	2004◇◆
2021	2022	2023	2024

colorants and bases. They are designed for heavy-duty protection in industrial environments and offer the same high quality and performance you have come to expect from other Rust-Oleum products.

Two distinctly different systems are available: **Solvent-Based** and **Water-Based**. Each includes specialized colorants and bases for the most popular product systems. This allows for instant matching of any of the 252 colors in this color card as well as current ready-mix standard colors. All finishes are high gloss; however, the 5200 High Performance Acrylic System is also available in semi-gloss and flat.

All of the colors can be prepared in the desired system by volumetric addition of colorants to the appropriate base. The volumetric formula for each color is contained in two separate formula books - one for all **Solvent-Based Systems** and one for all **Water-Based Systems**. Most systems are available in both one-gallon and five-gallon cans.

The colors shown herein should be considered close representations of the final color but not necessarily an exact match. Application and mixing conditions are outside of our control and may cause slight color variation; also color chips may change slightly with age.

please refer to Formula Books and Price Lists.

The ability of a color to hide is a function of the pigmentation used. Most colors will hide quite well; however, some light or very clean masstone colors may require additional coats or application over a white base coat.

These colors are specially marked as follows:
Solvent-Based Products - open diamond (◇)
Water-Based Products - solid diamond (◆)

Some colors in the **Water-Based System** are recommended for interior use or sheltered exterior use only in order to achieve maximum lightfastness. These are marked by a triangle (▲). *See Formula Book for details.*

For full information on the Rust-Oleum Tint Systems, refer to the formula books and Rust-Oleum technical and promotional literature.

COLORS FOR HEAVY DUTY PROTECTION

1101 1102 1103 1104

1111 1112 1113 1114

1121 1122◇ 1123 1124

1201▲ 1202◇◆ 1203◇ 1204◇

1211◇ 1212◇◆ 1213◇◆ 1214◇

1221◇ 1222◇ 1223◇◆ 1224◇◆

1231 1232◆ 1233◇◆ 1234◇◆

1241 1242◇◆ 1243◇◆ 1244◇

1301 1302 1303 1304

1311 1312 1313 1314

1321 1322 1323 1324

1331 1332 1333 1334

1401▲ 1402▲ 1403◇◆▲ 1404◇◆

1411◆ 1412◇ 1413◇◆ 1414◇◆

1421 1422▲ 1423▲ 1424

Chapter 16 PUMA 1000 DUMP TRAILER

MANUFACTURER/DISTRIBUTOR:
LES MACHINERIES PRONOVOST INC.
260, ROUTE159
ST-TITE,QUEBEC G0X 3H0
PH:418-365-7551
FAX:1-888-652-9270

16.1 PUMA- 10000 PHOTO AND SPECIFICATIONS

END OF CHAPTER 16

13220

Dump trailers

PUMA

Characteristics that assure you optimal performance.

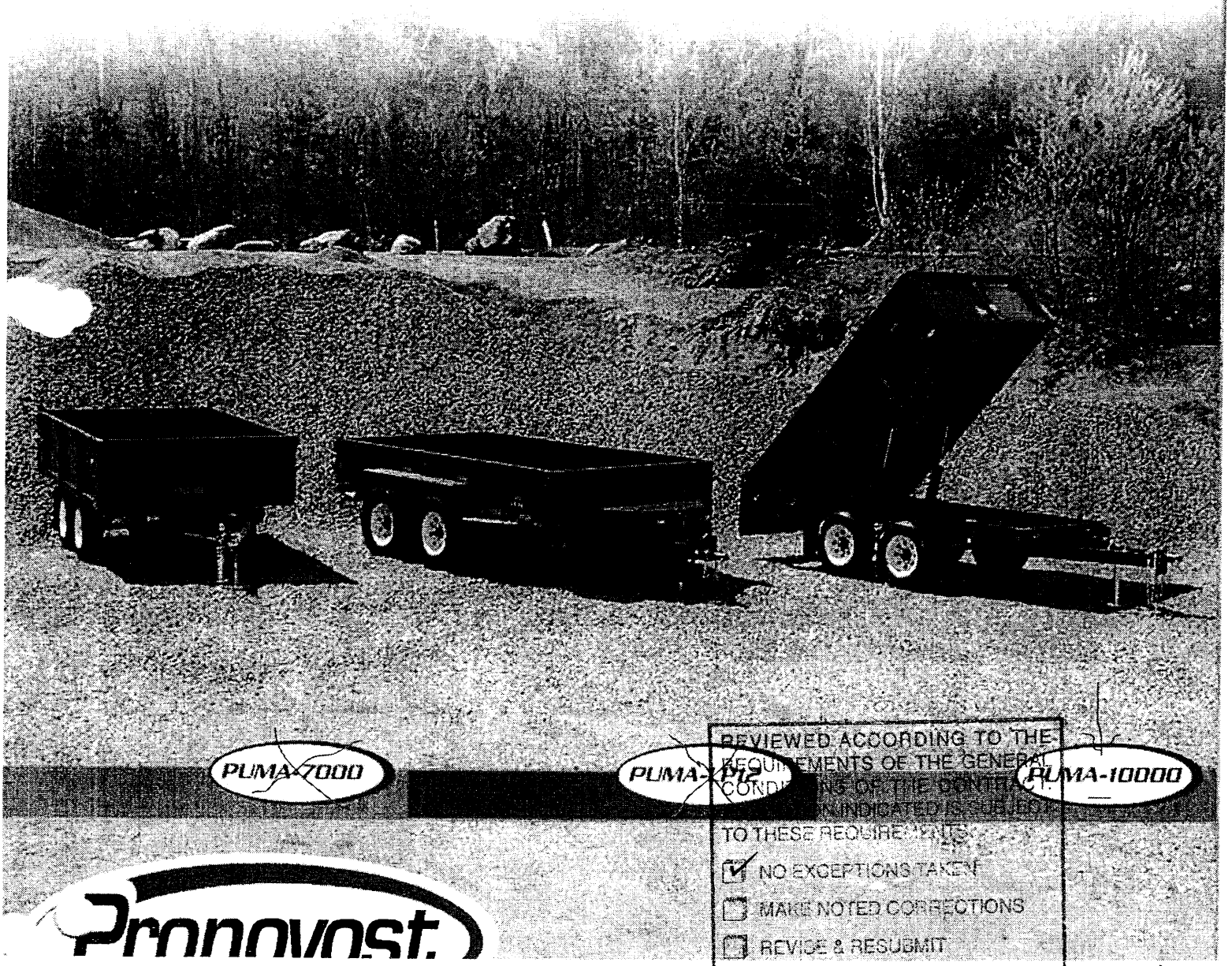

Prronovost.

REVIEWED ACCORDING TO THE REQUIREMENTS OF THE GENERAL CONDITIONS OF THE CONTRACT. WORK INDICATED IS SUBJECT TO THESE REQUIREMENTS

- [x] NO EXCEPTIONS TAKEN
- [ ] MAKE NOTED CORRECTIONS
- [ ] REVISE & RESUBMIT
- [ ] REJECTED

DATE Oct 31/05 BY DKB.

EARTH TECH (CANADA) INC.

16.1

1/4

PUMA-7000

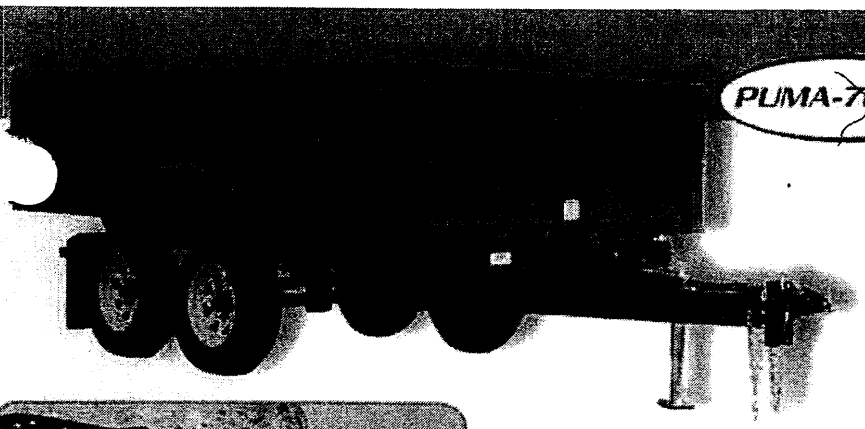

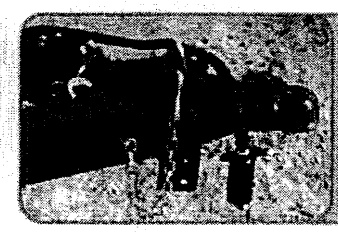

2 5/16" ajustable ball hitch

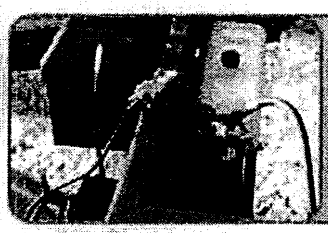

Hydraulic over electric powerpack (battery included)

PUMA-7000 lbs. 1 cylinder

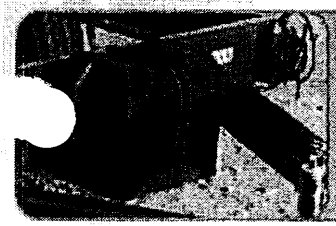

Battery holder (battery included)

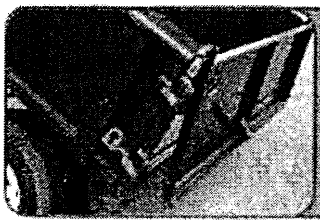

Door opening swing out from bottom with chain to limit opening

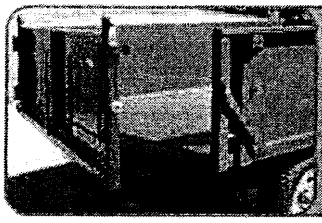

Door opening swing out to the side

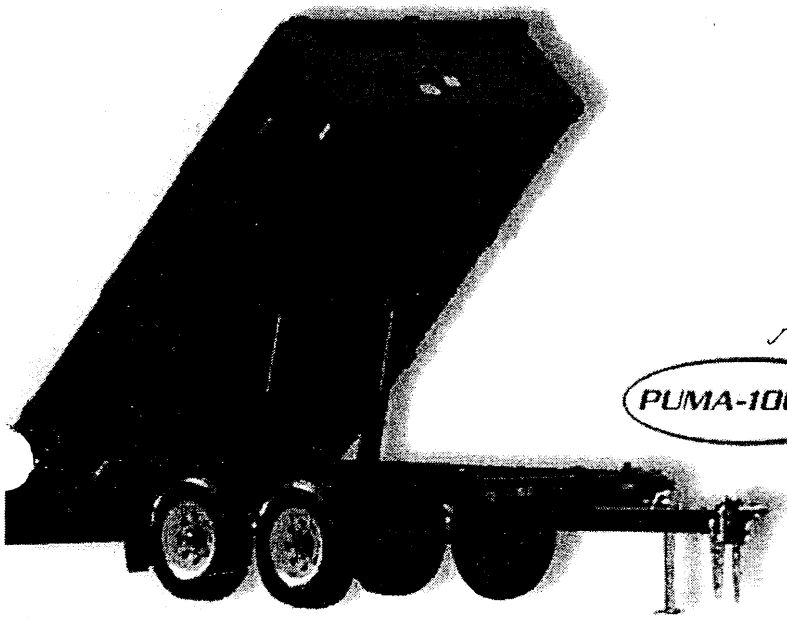

PUMA-10000

PUMA-LP12

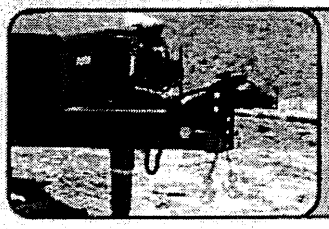

2 5/16" adjustable ball hitch

Tool box with hasp / hydraulic over electric power pack battery included

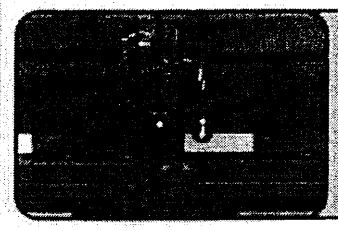

Secure door lock - simple and efficient

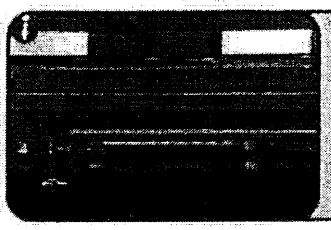

Easy access loading ramps

Rear panel automatic opening mechanism

2 single action cylinders

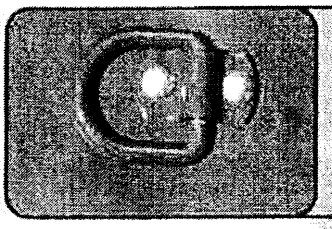

Tie down ring in each corner

D 2/4

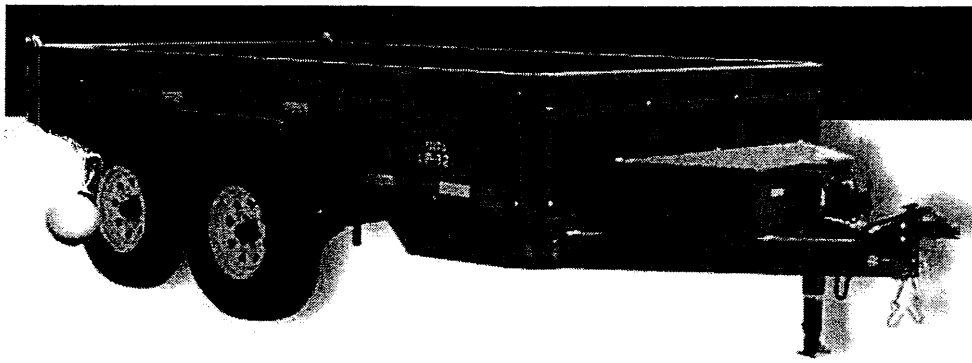

PUMA-LP12

The PUMA-LP12 dump trailer has been completetly developped with a new 3-D state of art software.

With this support, Pronovost R & D department has created for you, a sturdy, precise and multi-fonction dump trailer.

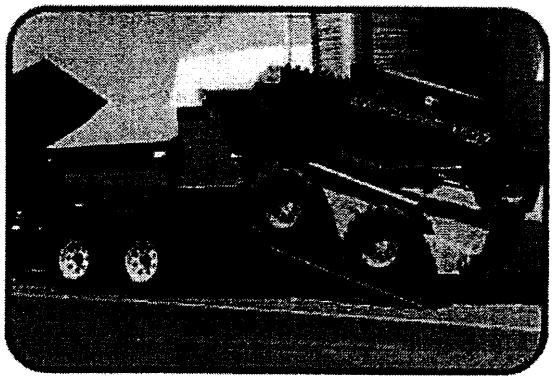

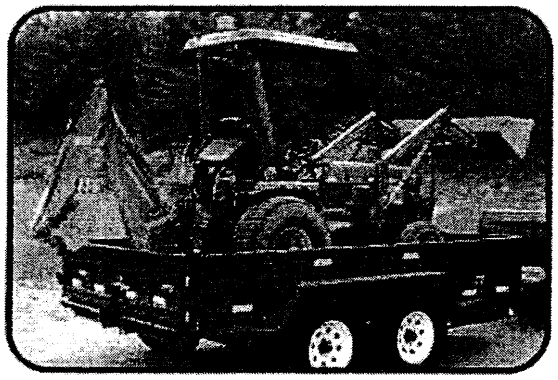

OPTION:
expanded metal door
2 openings

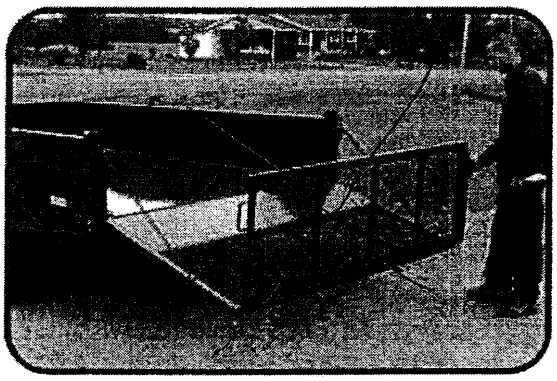

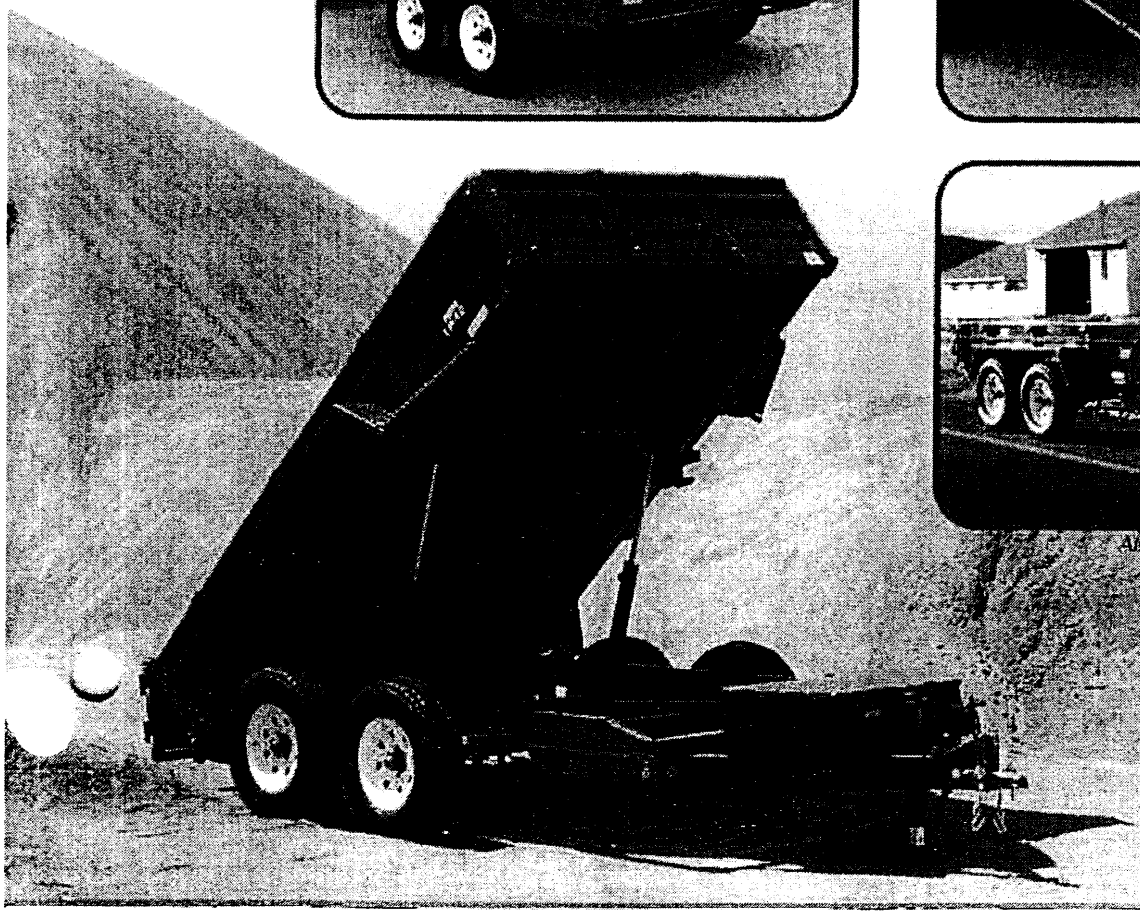

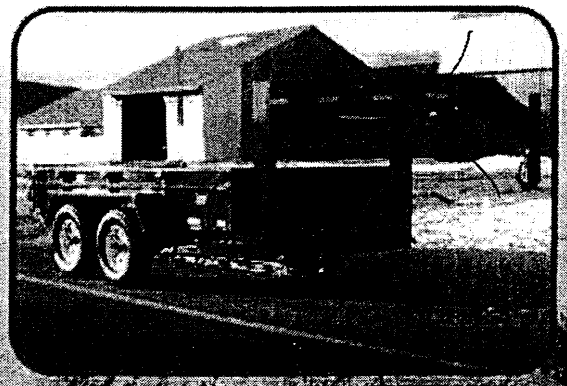

Also available with goosenack 2-5/16" ball hitch

16.1

D 3/4

Specificati

Models	PUMA-10000
Gross vehicle weight	10 000 lbs (4 535 kg)
Interior dimensions of box	72" x 120" (1,83 x 3,05 m)
Bed	12 g
Panels (front + sides + rear)	24" (610 mm) x 14 g
Platform height	32" (813 mm)
Rear door	to the side / swing out from the bottom
Option	n/a
2 loading ramps	n/a
Clearance of platform max. tilt	18" (457 mm)
Over-all length	176" (4,47 m)
Over-all width	79 15/16" (2,03 m)
Height - over all - box down	59" (1,50 m)
Height - at max tilt	127" (3,23 m)
Tread width c/c	61" (1,55 m)
Dumping angle	47 deg.
Suspension	Leaf springs
Wheel dimensions	15" x 6"
Tires	4x ST225 / 75D15
Ball hitch (ajustable height)	Ball 2 5/16"
Electric brake (on 4 wheels)	Standard
Signal lights (12V)	Standard
Oil volume required	1,60 gal US / 6 litres
Cyclinder	2 x 3" single action
Electric hydraulic pump (12V) + 6' extension	Standard
App. total weight	1 885 lbs (855 kg)

Design and specifications subject to char

dealer

Pronovost

Assuring your satisfact

Les Machineries Pronovost Inc.
260, Route 159, Saint-Tite QC Canada G0X 3H0
Telephone: (418) 365-7551 • Fax: 1 888 652-9270
E-mail: info@pronovost.qc.ca
www.pronovost.qc.ca

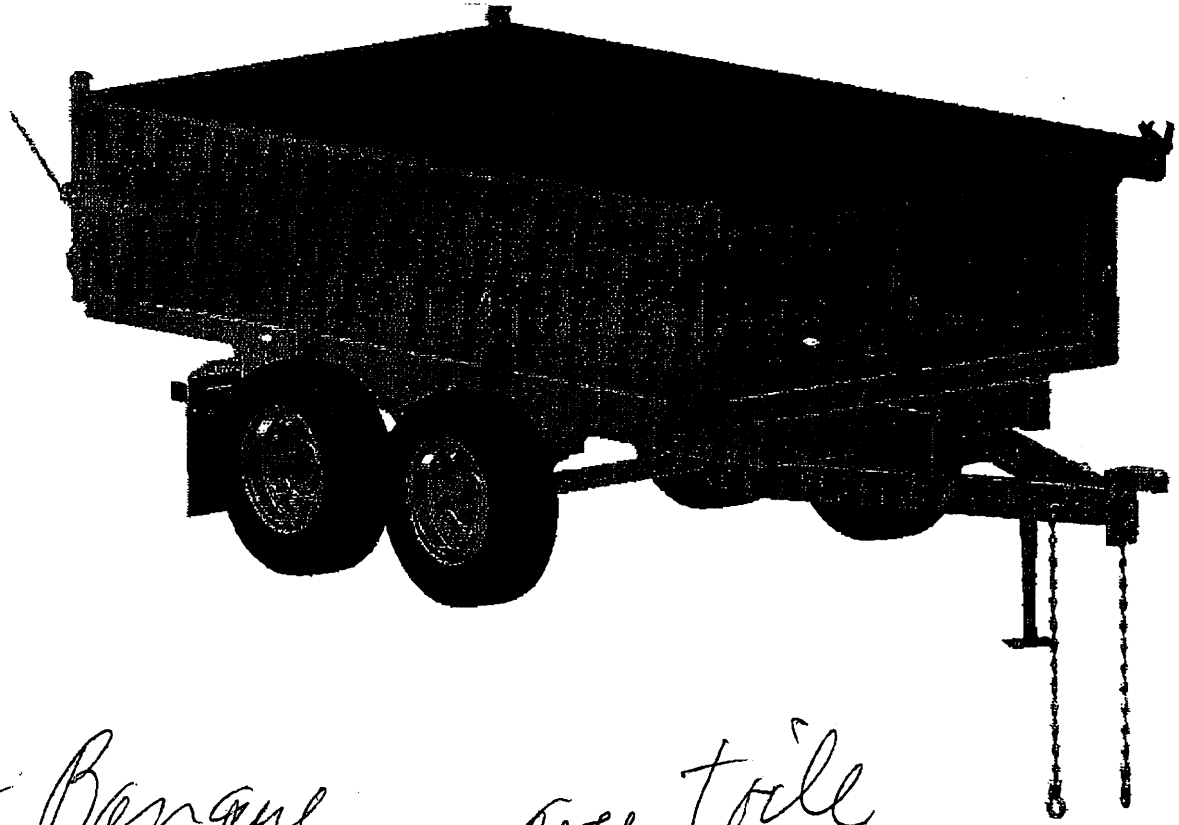

Benque avec toile STUCK

R RUNOVOST

du Prix Confirmé

Chapter 17 LABORATORY EQUIPMENT

MANUFACTURER/DISTRIBUTOR:

FISHER SCIENTIFIC
P.O. BOX 9200 TERMINAL
OTTAWA,ONTARIO K1G 1A9
PH:1-800-234-7437

17.1 Table 2-1 General laboratory items

17.2 Table 2-2 Solids testing laboratory equipment

END OF CHAPTER 17

FROM **KUDLIK CONST./SIFEC NORTH**
P.O.BOX, 727,1519 FEDERAL ROAD
IQALUIT, NUNAVUT X0A 0H0
PH:867-979-7704 FAX:1169

SHOP DRAWING SUBMITAL

EMAIL:_____

TO CITY OF IQUALUIT
C/O EARTH TECH Canada INC.
C/O MR.G.PROSKO,PH
C/ D.COOK,
PH:780-488-6800 FAX:2121

DATE:_____
PAGE 1 OF_____

PROJECT: WASTE WATER TREATMENT PLANT IQUALUIT,NU.

	QTE	DESCRIPTION	UNIT
		Primary influent filtration Section 13685	
	1	Materials see art. 2.1	
		Table 2-1 Geveral laboratory items	
		Table 2-2 Solids testing laboratory equipment	
		Table 2-3 Dissolved oxygen testing laboratory equipment	
QTE	SIZE	DESCRIPTION	FISHER CAT.
	TABLE 2.1	**GENERAL LABORATORY ITEMS**	
PK/500	LARGE	WEIGHING BOATS, PLASTIC	02-202C
1PK	50ML	BEAKER,GRIFIN LOW FORM POLYPROPYLENE (1PAQUET DE 12)	02-591-10A
1PK	100ML	BEAKER,GRIFIN LOW FORM POLYPROPYLENE (1PAQUET DE 12)	02-591-10B
1PK	250ML	BEAKER,GRIFIN LOW FORM POLYPROPYLENE (1PAQUET DE 6)	02-591-10D
2PK	600ML	BEAKER,GRIFIN LOW FORM POLYPROPYLENE(2PAQUETS DE 4)	02-591-10F
2PK	1000ML	BEAKER,GRIFIN LOW FORM POLYPROPYLENE(2PAQUETS DE 3)	02-591-10G
1PK	500ML	WASH BOTTLE (1PAQUET DE 4)	03-409-10E
1		BRUSH 4" BRISTLE 12" LONG ,BEAKER	03-541
1		BRUSH,CYLINDER,LARGE	03-621B
1		BRUSH SWIVEL JOINT 1 1/2 X 4 1/2 ,BOTTLE	03-565
1	1,5LB	DETERGENT, LABORATORY(3 1/4LB BOX)	04-320-4
6		KIMWIPES (TISSUE 4,5X8,5 PAQUET DE 280) FISHER CAT.06-666-2	06-666A
2	50ML	CYLINDER, GRADUATED,POLYPROPYLENE	08-572C
2	100ML	CYLINDER, GRADUATED,POLYPROPYLENE	08-572D
2	250ML	CYLINDER, GRADUATED,POLYPROPYLENE	08-572E
2	500ML	CYLINDER, GRADUATED,POLYPROPYLENE	08-572F
2	1000ML	CYLINDER, GRADUATED,POLYPROPYLENE	08-572G
6		MAGNETIC STIRBARS(OCTOGONAL 1X5/16") FISHER CAT.14-513-59	14-511-63
1		STIRBAR RETRIEVER 12"(FISHER CAT. 14-513-69)	14-511-86
1		MAGNETIC STIRRER / HEATER(MODEL PC220 4X5" 120V)	11-497-6A
1PK		SCOOPULAS STAINLESS STEEL(1PAQUET DE 6)	14-357
2		THERMOMETER, -20 -150CELICIUS/76MM	15-041-4D
PKG/100	LARGE	GLOVES , VINYL	19-019-911
1		SAFETY GOGGLES 9305CVA	17-253
1		COUNT-DOWN TIMER (3-LINE ALARM)	06-662-46
1		LAB CHAIR - HIGH FORM SWIVEL (FISHER CAT. 14-359-304)	91-2508P
10	200L	DRUMS OF LIQUID SODIUM HYPOCHLORITE(12,5%C12)	N/A
1		CORETAKER AS SUPPLIED BY LABCOR-MODEL : RK-05465-60	N/A

17.1 1/2

FROM **KUDLIK CONST./SIFEC NORTH**
P.O.BOX, 727,1519 FEDERAL ROAD
IQALUIT, NUNAVUT X0A 0H0
PH:867-979-7704 FAX:1169

SHOP DRAWING SUBMITAL

EMAIL:_____

TO CITY OF IQUALUIT
C/O EARTH TECH Canada INC.
C/O MR.G.PROSKO,PH
C/ D.COOK,
PH:780-488-6800 FAX:2121

DATE:_____
PAGE 1 OF_____

PROJECT: WASTE WATER TREATMENT PLANT IQUALUIT,NU.

	QTE	DESCRIPTION	UNIT
		Primary influent filtration Section 13685	
	1	Materials see art. 2.1	
		Table 2-1 Geveral laboratory items	
		Table 2-2 Solids testing laboratory equipment	
		Table 2-3 Dissolved oxygen testing laboratory equipment	
QTE	SIZE	DESCRIPTION	FISHER CAT.
	TABLE 2.1	**GENERAL LABORATORY ITEMS**	
PK/500	LARGE	WEIGHING BOATS, PLASTIC	02-202C
1PK	50ML	BEAKER,GRIFIN LOW FORM POLYPROPYLENE (1PAQUET DE 12)	02-591-10A
1PK	100ML	BEAKER,GRIFIN LOW FORM POLYPROPYLENE (1PAQUET DE 12)	02-591-10B
1PK	250ML	BEAKER,GRIFIN LOW FORM POLYPROPYLENE (1PAQUET DE 6)	02-591-10D
2PK	600ML	BEAKER,GRIFIN LOW FORM POLYPROPYLENE(2PAQUETS DE 4)	02-591-10F
2PK	1000ML	BEAKER,GRIFIN LOW FORM POLYPROPYLENE(2PAQUETS DE 3)	02-591-10G
1PK	500ML	WASH BOTTLE (1PAQUET DE 4)	03-409-10E
1		BRUSH 4" BRISTLE 12" LONG ,BEAKER	03-541
1		BRUSH,CYLINDER,LARGE	03-621B
1		BRUSH SWIVEL JOINT 1 1/2 X 4 1/2 ,BOTTLE	03-565
1	1,5LB	DETERGENT, LABORATORY(3 1/4LB BOX)	04-320-4
6		KIMWIPES (TISSUE 4,5X8,5 PAQUET DE 280) FISHER CAT.06-666-2	06-666A
2	50ML	CYLINDER, GRADUATED,POLYPROPYLENE	08-572C
2	100ML	CYLINDER, GRADUATED,POLYPROPYLENE	08-572D
2	250ML	CYLINDER, GRADUATED,POLYPROPYLENE	08-572E
2	500ML	CYLINDER, GRADUATED,POLYPROPYLENE	08-572F
2	1000ML	CYLINDER, GRADUATED,POLYPROPYLENE	08-572G
6		MAGNETIC STIRBARS(OCTOGONAL 1X5/16") FISHER CAT.14-513-59	14-511-63
1		STIRBAR RETRIEVER 12"(FISHER CAT. 14-513-69)	14-511-86
1		MAGNETIC STIRRER / HEATER(MODEL PC220 4X5" 120V)	11-497-6A
1PK		SCOOPULAS STAINLESS STEEL(1PAQUET DE 6)	14-357
2		THERMOMETER, -20 -150CELICIUS/76MM	15-041-4D
PKG/100	LARGE	GLOVES , VINYL	19-019-911
1		SAFETY GOGGLES 9305CVA	17-253
1		COUNT-DOWN TIMER (3-LINE ALARM)	06-662-46
1		LAB CHAIR - HIGH FORM SWIVEL (FISHER CAT. 14-359-304)	91-2508P
10	200L	DRUMS OF LIQUID SODIUM HYPOCHLORITE(12,5%C12)	N/A
1		CORETAKER AS SUPPLIED BY LABCOR-MODEL : RK-05465-60	N/A